City of Fernley



NEVADA

AGENDA
Regular Meeting
City Council
Wednesday, April 19, 2023 • 5:00 PM

Mayor
Neal E. McIntyre

City Council
Ward 1 - Ryan Hanan
Ward 2 - Felicity Zoberski
Ward 3 - Stan Lau
Ward 4 - Albert Torres
Ward 5 - Fran McKay

City Manager

Fernley City Council Chambers, 595 Silver Lace Boulevard, Fernley, NV 89408

Zoom information:
Please click the following link to join the webinar: https://us02web.zoom.us/j/82966343247, or one tap mobile: 12532158782, Dial: 669 900 9128, Webinar ID: 829 6634 3247

Public Notice: This agenda has been physically posted in compliance with 241.020 at Fernley City Hall, 595 Silver Lace Blvd. In addition, this agenda has been electronically posted in compliance with NRS 241.020(3) at www.cityoffernley.org and NRS 232.2175 at https://notice.nv.gov/ To obtain further documentation regarding posting, please contact the City Clerk's Office at (775) 784-9830 or cityclerk@cityoffernley.org

Public Comment: Those wishing to address the City Council may submit public comment through the online public comment form, or by sending an email to cityclerk@cityoffernley.org. Comments received prior to 4:00 pm the day of the meeting will be provided to City Council and added to the record but will not be read during the live meeting. Public comments received after 4 pm the day of the meeting will be included in the record by may not reach council members before action is taken. Public comment, whether on action items or public comment, is limited to three (3) minutes per person. Unused time may not be reserved by the speaker, nor allocated to another speaker. The public may comment on any matter that is not specifically included on an agenda as an action item or comment on a specific agenda item. Items not included on the agenda cannot be acted upon other than to place them on a future agenda. Additionally, if you wish you can comment in person at the meeting or use the Raise your Hand feature in Zoom (*9 if you are participating via phone).

Accommodations: City Council and staff will make reasonable efforts to assist and accommodate individuals with disabilities desiring to attend the meeting. Please contact the City Clerk's Office at (775) 784-9830 in advance so that arrangements can be made.

Supporting Material: Staff reports and supporting material for the meeting are available at the City Clerk's Office, and on the City's website at www.cityoffernley.org Pursuant to NRS 241.020(6), supporting material is made available to the general public at the same time it is provided to the City Council.

Order of Business: The presiding officer shall determine the order of the agenda. The Fernley City Council may combine two or more agenda items for consideration; remove an item from the agenda; or delay discussion relating to an item on the agenda at any time. All items are action items unless otherwise noted. Items scheduled to be heard at a specific time will be heard no earlier than the stated time but may be heard later.

1. INTRODUCTORY ITEMS

1.1. Roll Call

1.2. Public Forum

1.3. (For Possible Action) Approval of Agenda

2. CONSENT AGENDA

(PLEASE NOTE: ALL MATTERS LISTED UNDER THE CONSENT AGENDA ARE CONSIDERED ROUTINE, AND MAY BE ACTED UPON BY THE COUNCIL MEMBERS IN ONE MOTION, AND WITHOUT AN EXTENSIVE HEARING. ANY MEMBER OF THE COUNCIL MAY REQUEST THAT AN ITEM BE TAKEN FROM THE CONSENT AGENDA, DISCUSSED, AND ACTED UPON SEPARATELY DURING THIS MEETING.)

2.1. (Possible Action) Approval of the Voucher Report

2.2. (Possible Action) Approval of Business Licenses

2.3. Possible Action to Award a Contract for Construction for the US 50A/95A Sanitary Sewer Improvement Project (Project) to: Farr Construction Corporation dba. Resource Development Company (RDC), in an amount not to exceed $341,220.

2.4. Possible action to approve a contract with CFA for engineering design services for the In Town Park Improvement Project in an amount not to exceed $119,840.

2.5. Possible action to approve the 2022 Emergency Operations Plan for the City of Fernley.

2.6. Possible Action to purchase one (1), Ford F-450 with crane attachment from Corwin Ford for the City of Fernley's Wastewater Department for an amount not to exceed $101,548.25

2.7. (For Possible Action) Approve the Settlement in Case A-19-796755-B with CVS re: Opioids

2.8. (For Possible Action) Approve the Settlement in Case A-19-796755-B with ALLERGAN re: Opioids

2.9. Possible action to award a contract for the City Manager recruitment with Bakertilly for an amount not to exceed $25,000.

3. REPORTS - THIS ITEM IS FOR VARIOUS PUBLIC ENTITY REPRESENTATIVES TO PROVIDE GENERAL INFORMATION TO THE COUNCIL AND PUBLIC. NO ACTION WILL BE TAKEN.

3.1. Reports by City Staff, City Council, and the Mayor, including but not limited to monthly statistical reports by city departments.

3.2. State of Nevada Legislative update

4. PROCLAMATIONS BY THE MAYOR

5. ORDINANCES

5.1. Discussion and possible action to adopt Bill # 325, an Ordinance amending Title 16 Chapter 1 of the Fernley Municipal Code, parking and storage of junk vehicles as follows: This ordinance shall go into effect August 1, 2023.

5.2. (Possible Action) First reading and introduction of Bill # 328 an ordinance amending Title 6 of the Fernley Municipal Code to allow responsible dog owners to apply for an Additional Dog Permit and house a maximum of four dogs.

6. STAFF REPORTS

6.1. For Possible Action to approve the Community Response & Resource Center project 50% Construction Document submittal and approval to move forward with 100% Construction Documents.

6.2. Discuss and Possible Action regarding the City of Fernley's projects and initiatives identified in the Western Nevada Development District's Comprehensive Economic Development Strategy.

6.3. Discussion and Possible Action to direct staff to modify the municipal code in Title 2 Chapter 2 City Manager (formerly known as Bill 317).

6.4. Possible action to direct staff to proceed with sponsoring a low-cost Rabies Vaccine / Dog Microchip clinic on May 20, 2023.

7. RESOLUTIONS

7.1. Discuss and Possible Action to adopt Resolution 23-003 to increase dog license fees.

8. ADDRESS REQUEST(S) FOR FUTURE AGENDA ITEMS

9. PUBLIC FORUM

10. ADJOURNMENT

Next Meeting: May 3rd @ 5pm

Report Criteria:
Detail report.
Invoice detail records above $0 included.
Paid and unpaid invoices included.
Vendor.Vendor Number = {<>} 2201

Vendor	Vendor Name	Invoice Number	Description	Invoice Date	Invoice Amount	Date Paid	GL Account and Title	GL Period
AIT ADVANCED INTERPRETING & TRANSLATION								
8498	AIT ADVANCED INTERPRETING & TRANSLATION	202303A-FMC	Spanish - Gustavo Nunez Arias - 23TR00140	03/14/2023	160.00		100-425-330 PROF SERV-INTERPRETER	323
8498	AIT ADVANCED INTERPRETING & TRANSLATION	202303B-FMC	Spanish - Jose Duenas Lizaola 22TR00052	03/22/2023	160.00		100-425-330 PROF SERV-INTERPRETER	323
8498	AIT ADVANCED INTERPRETING & TRANSLATION	202303C4A	Spanish - Multiple Cases Morning Calendar	04/04/2023	160.00		100-425-330 PROF SERV-INTERPRETER	423
8498	AIT ADVANCED INTERPRETING & TRANSLATION	202303C-FMC	Spanish - Multiple Cases Morning and Afternoon Calendar	03/27/2023	160.00		100-425-330 PROF SERV-INTERPRETER	323
	Total 8498:				640.00			
ALL AMERICAN AUTO BODY FERNLEY LLC								
8938	ALL AMERICAN AUTO BODY FERNLEY LLC	1925	PAINT GATES FOR PARKS	04/11/2023	600.00		100-575-600 General Supplies	423
	Total 8938:				600.00			
AQUA BACKFLOW, INC								
8934	AQUA BACKFLOW, INC	2023-0092	Backflow monitoring service	04/04/2023	456.00		510-810-320 Prof Serv-Engineering	423
	Total 8934:				456.00			
ARAMARK								
1895	ARAMARK	5980083652	pants service	03/27/2023	48.53	04/06/2023	510-810-614 Supplies-Plant/Shop/Maint	323
1895	ARAMARK	5980083669	shirt contract	03/27/2023	43.80	04/06/2023	100-480-600 GENERAL SUPPLIES/TOOLS	323
1895	ARAMARK	5980083671	uniforms	03/27/2023	48.30	04/06/2023	100-475-616 Supplies-Safety	323
1895	ARAMARK	5980085453	pants service	04/03/2023	48.53		510-810-614 Supplies-Plant/Shop/Maint	423
1895	ARAMARK	5980085488	SHIRT CONTRACT	04/03/2023	43.80		100-480-600 GENERAL SUPPLIES/TOOLS	423
1895	ARAMARK	5980085490	uniforms	04/03/2023	48.30		100-475-616 Supplies-Safety	423
1895	ARAMARK	5980087114	shop mats	04/06/2023	77.17		510-810-614 Supplies-Plant/Shop/Maint	423
1895	ARAMARK	5980087146	PS Rugs and rags	04/06/2023	105.16		510-840-420 Contract Services	423
1895	ARAMARK	5980087154	mats	04/06/2023	175.52		100-417-614 Supplies-Plant/Shop/Maint	423
1895	ARAMARK	5980087542	SHIRT CONTRACT	04/10/2023	43.80		100-480-600 GENERAL SUPPLIES/TOOLS	423
	Total 1895:				682.91			
AT&T								
13	AT&T	28574 APR 23	131 252-7192 857 4	04/02/2023	160.00	04/12/2023	100-417-530 Communications (Internet,Cell)	423
13	AT&T	74368 APR 23	775 575-7187 436 8	03/26/2023	1,290.60	04/12/2023	100-417-530 Communications (Internet,Cell)	323
13	AT&T	81650 APR 23	775 835-8598 165 0	03/26/2023	372.17	04/12/2023	100-417-530 Communications (Internet,Cell)	323
13	AT&T	85367 APR 23	775 575-9058 536 7	03/26/2023	1,290.60	04/12/2023	100-417-530 Communications (Internet,Cell)	323
13	AT&T	96145 APR 23	131 252-8129 614 5	04/02/2023	230.00	04/12/2023	100-417-530 Communications (Internet,Cell)	423

Vendor	Vendor Name	Invoice Number	Description	Invoice Date	Invoice Amount	Date Paid	GL Account and Title	GL Period
13	AT&T	98670 APR 23	775-786-2229 867 0	03/20/2023	2,742.29	04/12/2023	100-417-530 Communications (Internet,Cell)	323
	Total 13:				6,085.66			
AUTO & TRUCK ELECTRIC, INC								
8868	AUTO & TRUCK ELECTRIC, INC	43777	battery for shop genset	03/29/2023	140.00	04/06/2023	510-810-610 Automotive Supplies	323
	Total 8868:				140.00			
BIG R OF FERNLEY								
20	BIG R OF FERNLEY	16528/5	seat cover armorall	03/30/2023	43.94	04/06/2023	100-575-610 Automotive Supplies	323
20	BIG R OF FERNLEY	16535/5	caulking tape screws	03/31/2023	164.31		100-475-612 Supplies-Building Maintenance	323
20	BIG R OF FERNLEY	16558/5	Electrical splice kit	04/04/2023	16.98		520-810-614 Supplies-Plant/Shop/Maint	423
20	BIG R OF FERNLEY	16572/5	irrigation and misc.	04/06/2023	90.57		100-575-600 General Supplies	423
20	BIG R OF FERNLEY	16586/5	park pickers	04/07/2023	24.99		100-575-600 General Supplies	423
20	BIG R OF FERNLEY	16600/5	irrigation	04/10/2023	132.93		100-575-600 General Supplies	423
20	BIG R OF FERNLEY	16605/55	tuck parts	04/10/2023	2.78		100-475-430 Service-Repair and Maintenance	423
	Total 20:				476.50			
BLUE BEACON INTERNATIONAL								
200	BLUE BEACON INTERNATIONAL	4081010	Vac-con cleaning	03/31/2023	91.20		510-810-610 Automotive Supplies	323
	Total 200:				91.20			
BOB'S PRINTING AND SIGNAGE								
6970	BOB'S PRINTING AND SIGNAGE	22323-2	YELLOW DOOR TAGS	03/28/2023	181.82	04/06/2023	520-810-601 Office Supplies	323
6970	BOB'S PRINTING AND SIGNAGE	22323-2	YELLOW DOOR TAGS	03/28/2023	181.83	04/06/2023	510-810-601 Office Supplies	323
6970	BOB'S PRINTING AND SIGNAGE	33023-2	Door Nameplate for Shay League	04/06/2023	27.00		100-610-601 Office Supplies	423
6970	BOB'S PRINTING AND SIGNAGE	33023-2	Council Nameplate for Lisa Warner	04/06/2023	20.00		100-610-601 Office Supplies	423
	Total 6970:				410.65			
BRADY INDUSTRIES OF NEVADA LLC								
8837	BRADY INDUSTRIES OF NEVADA LLC	7883431	service and repair	03/01/2023	349.83		100-417-605 Minor Equipment	323
	Total 8837:				349.83			
CAL NEVADA TOWING & TRANSPORT								
5269	CAL NEVADA TOWING & TRANSPORT	603812	tow dump truck to sparks for repair	03/31/2023	506.25		100-475-430 Service-Repair and Maintenance	323
	Total 5269:				506.25			

Vendor	Vendor Name	Invoice Number	Description	Invoice Date	Invoice Amount	Date Paid	GL Account and Title	GL Period
CC CLEANING SERVICE, LLC								
8913	CC CLEANING SERVICE, LLC	#009-FCH	cleaning	03/31/2023	1,175.00		100-417-420 Contract Services	323
	Total 8913:				1,175.00			
CHASE PAYMENTECH MERCHANT SERVICES								
8637	CHASE PAYMENTECH MERCHANT SERVICES	MAR 2023	Finance-Cc Processing Fees 6291057	03/31/2023	1,084.87	03/31/2023	100-415-609 Credit Card Fees - Govt Svcs	323
8637	CHASE PAYMENTECH MERCHANT SERVICES	MAR 2023	Water-CC Processing Fees 6181757	03/31/2023	3,124.66	03/31/2023	510-810-609 Credit Card Fees	323
8637	CHASE PAYMENTECH MERCHANT SERVICES	MAR 2023	finance-cc processing fees 6291058	03/31/2023	94.86	03/31/2023	100-415-609 Credit Card Fees - Govt Svcs	323
8637	CHASE PAYMENTECH MERCHANT SERVICES	MAR 2023	Sewer-CC Processing Fees 6181757	03/31/2023	3,124.66	03/31/2023	520-810-609 Credit Card Fees	323
	Total 8637:				7,429.05			
CITY OF FERNLEY								
32	CITY OF FERNLEY	30 7838 13	WATER CONVEYANCE; PN# 2019-002-1	04/06/2023	87.54		510-166100 Construction In Progress	423
	Total 32:				87.54			
CLARKE MOSQUITO CONTROL PRODUCT								
1936	CLARKE MOSQUITO CONTROL PRODUCT	5103932	briquets	04/07/2023	3,933.00		100-528-617 Supplies-Chemical	423
	Total 1936:				3,933.00			
CORE CONSTRUCTION SERVICES OF NEVADA,INC								
8916	CORE CONSTRUCTION SERVICES OF NEVADA,IN	221001008	Core Pre - Con CMAR - 1 March 23	10/31/2022	.00		220-480-810 ARPA	1022
	Total 8916:				.00			
CUMMING MANAGEMENT GROUP, INC								
8889	CUMMING MANAGEMENT GROUP, INC	123545	Professional Services 03/01/2023 - 03/31/2023	03/01/2023	9,688.00		220-480-810 ARPA	323
	Total 8889:				9,688.00			
DESERT COMMERCIAL SWEEPING								
7804	DESERT COMMERCIAL SWEEPING	13699	sweeping	03/22/2023	4,800.00	04/06/2023	100-475-420 Contract-Street Sweeping	323
7804	DESERT COMMERCIAL SWEEPING	13705	street sweeping	04/04/2023	4,800.00		100-475-420 Contract-Street Sweeping	423
	Total 7804:				9,600.00			
Fast Glass								
798	Fast Glass	IFA061706	window courts	03/08/2023	750.00		100-417-430 Service-Building Repair/Maint	323
	Total 798:				750.00			

Vendor	Vendor Name	Invoice Number	Description	Invoice Date	Invoice Amount	Date Paid	GL Account and Title	GL Period
FERNLEY VAQUERO BOOSTERS								
6569	FERNLEY VAQUERO BOOSTERS	APR 2023	SAFE & SOBER 2023 - FHS	04/05/2023	50.00		100-412-650 Community Support	423
	Total 6569:				50.00			
FLYERS ENERGY, LLC								
18	FLYERS ENERGY, LLC	23-795931	well(s) motor oil	04/07/2023	763.71		510-840-430 Service-Repair and Maintenance	423
18	FLYERS ENERGY, LLC	CFS-3360158	GASOLINE - PARKS	03/15/2023	276.96	04/06/2023	100-575-626 Gasoline	323
18	FLYERS ENERGY, LLC	CFS-3360158	GASOLINE - STREETS	03/15/2023	1,121.78	04/06/2023	100-475-626 Gasoline	323
18	FLYERS ENERGY, LLC	CFS-3360158	GASOLINE - FLEET	03/15/2023	218.47	04/06/2023	100-480-626 GASOLINE	323
18	FLYERS ENERGY, LLC	CFS-3360158	GASOLINE - WATER DIST	03/15/2023	1,654.41	04/06/2023	510-810-626 Gasoline	323
18	FLYERS ENERGY, LLC	CFS-3360158	GASOLINE - CDD BUILDING	03/15/2023	261.11	04/06/2023	100-605-626 Gasoline	323
18	FLYERS ENERGY, LLC	CFS-3360158	GASOLINE - ENGINEERING	03/15/2023	9.01	04/06/2023	100-529-626 Gasoline	323
18	FLYERS ENERGY, LLC	CFS-3360158	GASOLINE - VECTOR	03/15/2023	31.64	04/06/2023	100-528-626 Gasoline	323
18	FLYERS ENERGY, LLC	CFS-3360158	GASOLINE - ANIMAL CONTROL	03/15/2023	286.85	04/06/2023	100-525-626 Gasoline	323
18	FLYERS ENERGY, LLC	CFS-3360158	GASOLINE - WATER TREATMENT	03/15/2023	118.03	04/06/2023	510-840-626 Gasoline	323
18	FLYERS ENERGY, LLC	CFS-3360158	GASOLINE - SEWER	03/15/2023	1,654.19	04/06/2023	520-810-626 Gasoline	323
18	FLYERS ENERGY, LLC	CFS-3360158	GASOLINE - FACILITIES	03/15/2023	151.84	04/06/2023	100-417-626 Gasoline	323
	Total 18:				6,548.00			
GRAINGER								
252	GRAINGER	9658635520	phone for shop and DMV stickers	03/30/2023	22.92		100-480-610 AUTOMOTIVE SUPPLIES	323
252	GRAINGER	9663535798	shop phone	04/04/2023	37.31		100-480-610 AUTOMOTIVE SUPPLIES	423
252	GRAINGER	9670253310	PS Air System Drains	04/11/2023	526.88		510-840-430 Service-Repair and Maintenance	423
	Total 252:				587.11			
HANNEMAN SERVICE								
70	HANNEMAN SERVICE	0111388	Misc service labor	03/11/2023	145.00	04/07/2023	100-605-322 Prof Serv-Other	323
70	HANNEMAN SERVICE	111409	Misc Service Labor	03/27/2023	145.00	04/07/2023	100-605-322 Prof Serv-Other	323
70	HANNEMAN SERVICE	13109	'02 Black Cadillac Deville No plates 409 Bramble	03/27/2023	55.00	04/07/2023	100-605-322 Prof Serv-Other	323
	Total 70:				345.00			
HANSFORD ECONOMIC CONSULTING								
6228	HANSFORD ECONOMIC CONSULTING	525	Water rights protection	04/10/2023	630.00		510-810-698 Water Rights Protection	423
	Total 6228:				630.00			
HEADWAY TRANSPORTATION, LLC								
8836	HEADWAY TRANSPORTATION, LLC	4008	CRRC Traffic Study 02/25/23 - 03/31/23	04/04/2023	10,000.00		220-480-810 ARPA	423

Vendor	Vendor Name	Invoice Number	Description	Invoice Date	Invoice Amount	Date Paid	GL Account and Title	GL Period
	Total 8836:				10,000.00			
IBEW Local 1245								
83	IBEW Local 1245	APR 2023-1	UNION DUES, ONE HALF OF MONTH	04/07/2023	712.82	04/07/2023	100-219900 OTHER PAYROLL PAYABLES	423
83	IBEW Local 1245	MAR 2023-2	UNION DUES, ONE HALF OF MONTH	03/24/2023	775.64	03/24/2023	100-219900 OTHER PAYROLL PAYABLES	323
	Total 83:				1,488.46			
INTERNAL REVENUE SERVICE								
7879	INTERNAL REVENUE SERVICE	APR 2023-1	MED TAX PAYABLE, PAYROLL	04/07/2023	5,696.78	04/07/2023	100-211000 FICA PAYABLE	423
7879	INTERNAL REVENUE SERVICE	APR 2023-1	FICA TAX PAYABLE, PAYROLL	04/07/2023	136.60	04/07/2023	100-211000 FICA PAYABLE	423
7879	INTERNAL REVENUE SERVICE	APR 2023-1	W/HOLD TAX PAYABLE, PAYROLL	04/07/2023	20,677.28	04/07/2023	100-212000 FEDERAL WITHHOLDING PAYAB	423
7879	INTERNAL REVENUE SERVICE	MAR 2023-2	W/HOLD TAX PAYABLE, PAYROLL	03/24/2023	18,561.41	03/24/2023	100-212000 FEDERAL WITHHOLDING PAYAB	323
7879	INTERNAL REVENUE SERVICE	MAR 2023-2	FICA TAX PAYABLE, PAYROLL	03/24/2023	255.26	03/24/2023	100-211000 FICA PAYABLE	323
7879	INTERNAL REVENUE SERVICE	MAR 2023-2	MED TAX PAYABLE, PAYROLL	03/24/2023	5,393.70	03/24/2023	100-211000 FICA PAYABLE	323
	Total 7879:				50,721.03			
INTERSTATE OIL COMPANY								
4329	INTERSTATE OIL COMPANY	812488-in	fleet oil	04/04/2023	1,106.21		100-480-610 AUTOMOTIVE SUPPLIES	423
	Total 4329:				1,106.21			
KOCH ELEVATOR CO.								
8751	KOCH ELEVATOR CO.	31387	elevator service	04/01/2023	190.00	04/06/2023	100-417-420 Contract Services	423
	Total 8751:				190.00			
LEMONS, GRUNDY & EISENBERG								
8835	LEMONS, GRUNDY & EISENBERG	11	HR attorney	03/14/2023	530.00	04/06/2023	100-414-310 Prof Serv-Legal	323
	Total 8835:				530.00			
LOWES CREDIT SERVICES								
7650	LOWES CREDIT SERVICES	01246	CONCRETE for manhole ring repair on 95A	04/11/2023	37.80		520-810-614 Supplies-Plant/Shop/Maint	423
7650	LOWES CREDIT SERVICES	23421	light for well 9A	03/22/2023	37.99	04/06/2023	510-810-616 Supplies-Safety	323
7650	LOWES CREDIT SERVICES	23483	Temp wiring for E-Ones	04/01/2023	508.71	04/06/2023	520-810-615 E-One R & M	423
7650	LOWES CREDIT SERVICES	23701	ABS Fittings and Electrical connectors	04/04/2023	43.79		510-810-614 Supplies-Plant/Shop/Maint	423
7650	LOWES CREDIT SERVICES	2571	PS MF Parts	04/05/2023	139.22		510-840-614 Plant/Shop/Maint. Supplies	423
7650	LOWES CREDIT SERVICES	2626	PS MF Parts	04/05/2023	14.52		510-840-614 Plant/Shop/Maint. Supplies	423
7650	LOWES CREDIT SERVICES	2863	phone wire for shop	04/07/2023	39.39		100-480-610 AUTOMOTIVE SUPPLIES	423

Vendor	Vendor Name	Invoice Number	Description	Invoice Date	Invoice Amount	Date Paid	GL Account and Title	GL Period
	Total 7650:				821.42			
LYON COUNTY CLERK/TREASURER								
106	LYON COUNTY CLERK/TREASURER	3/2023	Road Tax(rct) payable to Lyon Co	03/31/2023	109,000.00		100-227010 Road RCT Payable to County	323
106	LYON COUNTY CLERK/TREASURER	Mar 23	School Tax(rct) payable to Lyon Co	03/31/2023	166,400.00		100-227015 School RCT Payble to County	323
106	LYON COUNTY CLERK/TREASURER	Mar 23	1% Admin fee(kept by city)	03/31/2023	1,664.00-		100-330-450 ADMINISTRATION FEES	323
106	LYON COUNTY CLERK/TREASURER	TLT Mar 23	Transient Lodging Tax	03/31/2023	2,999.50		225-227010 TLT Payable to County	323
	Total 106:				276,735.50			
MARSHALL'S SEPTIC CARE								
8509	MARSHALL'S SEPTIC CARE	111237	portables	04/01/2023	514.65	04/06/2023	100-575-420 Contract Services	423
8509	MARSHALL'S SEPTIC CARE	I11235	portable	04/01/2023	113.33	04/06/2023	100-575-420 Contract Services	423
8509	MARSHALL'S SEPTIC CARE	I11236	portable	04/01/2023	113.33	04/06/2023	100-575-420 Contract Services	423
8509	MARSHALL'S SEPTIC CARE	I11239	portables	04/01/2023	200.66	04/06/2023	100-575-420 Contract Services	423
8509	MARSHALL'S SEPTIC CARE	I11240	portables	04/01/2023	200.66	04/06/2023	100-575-420 Contract Services	423
8509	MARSHALL'S SEPTIC CARE	I11244	portable	04/01/2023	113.33	04/06/2023	100-575-420 Contract Services	423
8509	MARSHALL'S SEPTIC CARE	I11247	portable	04/01/2023	113.33	04/06/2023	100-575-420 Contract Services	423
	Total 8509:				1,369.29			
MISCELLANEOUS ONE TIME VENDOR								
1111	MISCELLANEOUS ONE TIME VENDOR	FIELD DAY	FES FIELD DAY DONATION	04/03/2023	50.00		100-412-650 Community Support	423
	Total 1111:				50.00			
MOUNTAIN ALARM								
8814	MOUNTAIN ALARM	3442264	monitoring service Depot	03/15/2023	31.67	04/06/2023	100-417-420 Contract Services	323
	Total 8814:				31.67			
NAPA AUTO & TRUCK PARTS								
58	NAPA AUTO & TRUCK PARTS	388730	parts for streets dump truck	03/30/2023	399.02	04/06/2023	100-475-430 Service-Repair and Maintenance	323
58	NAPA AUTO & TRUCK PARTS	388732	parts for streets dump truck	03/30/2023	24.88	04/06/2023	100-475-430 Service-Repair and Maintenance	323
58	NAPA AUTO & TRUCK PARTS	388748	Replacement SCADA batteries	03/30/2023	294.34	04/06/2023	100-475-430 Service-Repair and Maintenance	323
58	NAPA AUTO & TRUCK PARTS	388791	SWEEPER PARTS	03/31/2023	121.16		100-475-430 Service-Repair and Maintenance	323
58	NAPA AUTO & TRUCK PARTS	388938	INCORRET PARTS FOR SWEEPER	04/03/2023	78.41-		100-475-430 Service-Repair and Maintenance	423
58	NAPA AUTO & TRUCK PARTS	388988	sweeper parts	04/04/2023	63.04		100-475-430 Service-Repair and Maintenance	423
58	NAPA AUTO & TRUCK PARTS	389042	parts for dump truck	04/05/2023	262.36		100-475-430 Service-Repair and Maintenance	423
58	NAPA AUTO & TRUCK PARTS	389085	truck parts for streets dump truck	04/06/2023	57.18		100-475-430 Service-Repair and Maintenance	423
58	NAPA AUTO & TRUCK PARTS	389086	fuel filter for w/w	04/06/2023	18.76		510-810-430 Repairs & Maintenance	423
58	NAPA AUTO & TRUCK PARTS	389122	brake parts for streets dump truck	04/06/2023	390.18		100-475-430 Service-Repair and Maintenance	423
58	NAPA AUTO & TRUCK PARTS	389131	parts for streets dump truck	04/06/2023	63.76		100-475-430 Service-Repair and Maintenance	423

Vendor	Vendor Name	Invoice Number	Description	Invoice Date	Invoice Amount	Date Paid	GL Account and Title	GL Period
58	NAPA AUTO & TRUCK PARTS	389154	brake parts for streets dump truck	04/07/2023	723.21		100-475-430 Service-Repair and Maintenance	423
58	NAPA AUTO & TRUCK PARTS	389162	credit memo for wheel drum	04/07/2023	353.18-		100-475-430 Service-Repair and Maintenance	423
58	NAPA AUTO & TRUCK PARTS	389170	parts for streets dump truck	04/07/2023	57.18		100-475-430 Service-Repair and Maintenance	423
58	NAPA AUTO & TRUCK PARTS	389190	parts for streets dump truck	04/07/2023	22.27		100-475-430 Service-Repair and Maintenance	423
58	NAPA AUTO & TRUCK PARTS	410195	truck parts	04/05/2023	353.18		100-475-430 Service-Repair and Maintenance	423
	Total 58:				2,418.93			
NCE								
7617	NCE	675222505	On call development inspection services	03/29/2023	10,591.60	04/06/2023	100-529-320 Prof Serv-Engineering	323
	Total 7617:				10,591.60			
NEVADA DEPARTMENT OF TAXATION								
6378	NEVADA DEPARTMENT OF TAXATION	TLT Mar 23	Transient Lodging Tax	03/31/2023	1,799.70		225-227015 TLT Payable to State	323
	Total 6378:				1,799.70			
NEVADA DEPT PUBLIC SAFETY - DPS								
7405	NEVADA DEPT PUBLIC SAFETY - DPS	62878	A. Pena background check	04/03/2023	20.12		510-840-322 Prof Serv-Other	423
7405	NEVADA DEPT PUBLIC SAFETY - DPS	62878	D Guptill - background check	04/03/2023	20.13		100-417-322 Prof Serv-Other	423
	Total 7405:				40.25			
NEVADA EMPLOYMENT SECURITY DIV								
300	NEVADA EMPLOYMENT SECURITY DIV	1ST QTR 2023	UNEMPLOYMENT CONTRIBUTIONS	03/31/2023	17,229.25	03/31/2023	100-218900 UNEMPLOYMENT PAYABLE	323
	Total 300:				17,229.25			
NEVADA STATE TREASURER								
127	NEVADA STATE TREASURER	1ST QTR 2023	CHILD SUPPORT WITHHOLDING FEES	03/31/2023	12.00	04/06/2023	100-219900 OTHER PAYROLL PAYABLES	323
	Total 127:				12.00			
NSB - BANKCARD CENTER								
8649	NSB - BANKCARD CENTER	MAR 2023	ORLEANS HOTEL; PERMIT TECH TRNG LV R ENDEL	03/31/2023	119.76	04/10/2023	100-605-580 Training	323
8649	NSB - BANKCARD CENTER	MAR 2023	APA; L WARNER 2023 PLANNING CONF	03/31/2023	350.00	04/10/2023	100-610-580 Training	323
8649	NSB - BANKCARD CENTER	MAR 2023	APA; L WARNER DUES; MEMBERSHIP; E-LEARNING REG	03/31/2023	279.00	04/10/2023	100-610-580 Training	323
8649	NSB - BANKCARD CENTER	MAR 2023	ZSTAMPER; ENDORSEMENT STAMP; T WOOD	03/31/2023	10.43	04/10/2023	510-810-601 Office Supplies	323
8649	NSB - BANKCARD CENTER	MAR 2023	PAPER DIRECT; BUS LICENSE CERTIFICATES	03/31/2023	194.91	04/10/2023	100-416-600 General Supplies	323
8649	NSB - BANKCARD CENTER	MAR 2023	NRWA; MEMBERSHIP AND DUES P SPARKS	03/31/2023	372.00	04/10/2023	510-840-581 Dues and Memberships	323
8649	NSB - BANKCARD CENTER	MAR 2023	FERNLEY CHAMBER; AMBASSADOR BRKFST; CITY ATTO	03/31/2023	6.15	04/10/2023	100-414-580 Training	323
8649	NSB - BANKCARD CENTER	MAR 2023	RALEYS; CM PANEL LUNCH	03/31/2023	25.96	04/10/2023	100-412-580 Training	323
8649	NSB - BANKCARD CENTER	MAR 2023	AMERICAN AIRLINES; G ZOUKEE AIRLINE; CM CANIDATE	03/31/2023	1,328.40	04/10/2023	100-413-582 Travel	323

Vendor	Vendor Name	Invoice Number	Description	Invoice Date	Invoice Amount	Date Paid	GL Account and Title	GL Period
8649	NSB - BANKCARD CENTER	MAR 2023	COMFORT SUITES; COLLINS/ZOUKEE ROOMS, CM CANI	03/31/2023	617.16	04/10/2023	100-413-582 Travel	323
8649	NSB - BANKCARD CENTER	MAR 2023	SONSRAY MACHINERY; DOOR HARDWARE FOR LOADER	03/31/2023	180.25	04/10/2023	100-475-430 Service-Repair and Maintenance	323
8649	NSB - BANKCARD CENTER	MAR 2023	ZOOM; MONTHLY MAR 2023	03/31/2023	140.00	04/10/2023	100-418-342 Tech Services-Other	323
8649	NSB - BANKCARD CENTER	MAR 2023	ZOOM; MONTHLY MAR 2023	03/31/2023	100.00	04/10/2023	100-425-322 Prof Serv-Other	323
8649	NSB - BANKCARD CENTER	MAR 2023	AMAZON; LAMP HOLDERS	03/31/2023	100.60	04/10/2023	510-840-430 Service-Repair and Maintenance	323
8649	NSB - BANKCARD CENTER	MAR 2023	AMAZON; BATTERY REPLACEMENTS WTP	03/31/2023	55.99	04/10/2023	510-840-430 Service-Repair and Maintenance	323
8649	NSB - BANKCARD CENTER	MAR 2023	STAMPLI; FEB 2023	03/31/2023	1,034.00	04/10/2023	100-418-342 Tech Services-Other	323
8649	NSB - BANKCARD CENTER	MAR 2023	FRED PRYOR; READING CONTRACT TRNG; T LUKAS	03/31/2023	199.00	04/10/2023	100-415-580 Training	323
8649	NSB - BANKCARD CENTER	MAR 2023	ZSTAMPER; ENDORSEMENT STAMP; T WOOD	03/31/2023	5.21	04/10/2023	510-840-601 Office Supplies	323
8649	NSB - BANKCARD CENTER	MAR 2023	ZSTAMPER; ENDORSEMENT STAMP; T WOOD	03/31/2023	7.82	04/10/2023	100-575-601 Office Supplies	323
8649	NSB - BANKCARD CENTER	MAR 2023	SONSRAY MACHINERY; GLASS FOR LOADER	03/31/2023	850.38	04/10/2023	100-475-430 Service-Repair and Maintenance	323
8649	NSB - BANKCARD CENTER	MAR 2023	SONSRAY MACHINERY; CREDIT WRONG PART; GLASS R	03/31/2023	399.60-	04/10/2023	100-475-430 Service-Repair and Maintenance	323
8649	NSB - BANKCARD CENTER	MAR 2023	MICROSOFT; VISIO LICENSE	03/31/2023	117.87	04/10/2023	100-418-342 Tech Services-Other	323
8649	NSB - BANKCARD CENTER	MAR 2023	RALEYS/WALMART; FOOD S HENDERSON RETIREMENT	03/31/2023	57.29	04/10/2023	100-412-586 Employee Recognition	323
8649	NSB - BANKCARD CENTER	MAR 2023	SHRM; ANN'L MEMBERSHIP J MOXLEY	03/31/2023	244.00	04/10/2023	100-413-581 Dues and Memberships	323
8649	NSB - BANKCARD CENTER	MAR 2023	SECURITY BASE; DVR REPLACEMENT FOR CAMERAS	03/31/2023	1,017.00	04/10/2023	100-575-605 Minor Equipment	323
8649	NSB - BANKCARD CENTER	MAR 2023	NATIONAL BAND & TAG; RABIES TAG	03/31/2023	91.59	04/10/2023	100-525-600 General Supplies	323
8649	NSB - BANKCARD CENTER	MAR 2023	NNDA BUSINESS EDGE EVENT; MAYOR	03/31/2023	60.00	04/10/2023	100-412-580 Training	323
8649	NSB - BANKCARD CENTER	MAR 2023	ZOOM; MONTHLY FEB 2023	03/31/2023	100.00	04/10/2023	100-425-322 Prof Serv-Other	323
8649	NSB - BANKCARD CENTER	MAR 2023	APA; L ALTICK 2023 PLANNING CONF	03/31/2023	350.00	04/10/2023	100-610-580 Training	323
8649	NSB - BANKCARD CENTER	MAR 2023	APA; L ALTICK E-TRAINING REG	03/31/2023	180.00	04/10/2023	100-610-580 Training	323
8649	NSB - BANKCARD CENTER	MAR 2023	ZSTAMPER; ENDORSEMENT STAMP; T WOOD	03/31/2023	13.04	04/10/2023	100-475-601 Supplies-Office	323
8649	NSB - BANKCARD CENTER	MAR 2023	AMAZON; 4 COPIES OF GREENLIGHTS FOR CC OFFICE	03/31/2023	62.72	04/10/2023	100-416-580 Training	323
8649	NSB - BANKCARD CENTER	MAR 2023	NRWA; CONF TRNG P SPARKS	03/31/2023	1,362.18	04/10/2023	510-840-580 Training	323
8649	NSB - BANKCARD CENTER	MAR 2023	PRICELINE; CAR RENTAL D COLLINS; COULDN'T CANCE	03/31/2023	233.20	04/10/2023	100-413-582 Travel	323
8649	NSB - BANKCARD CENTER	MAR 2023	CHARTER COMM; 304798022823 MAR 2023	03/31/2023	129.98	04/10/2023	100-417-530 Communications (Internet,Cell)	323
8649	NSB - BANKCARD CENTER	MAR 2023	APWA; FACILITIES WORKSHOP K WEITZEL	03/31/2023	50.00	04/10/2023	100-529-580 Training	323
8649	NSB - BANKCARD CENTER	MAR 2023	USPS; POSTAGE TO OVERNIGHT CORRESPONDENCE	03/31/2023	8.13	04/10/2023	510-810-550 Printing and Postage	323
8649	NSB - BANKCARD CENTER	MAR 2023	FERNLEY CHAMBER; AMBASSADOR BRKFST; MAYOR	03/31/2023	6.15	04/10/2023	100-412-580 Training	323
8649	NSB - BANKCARD CENTER	MAR 2023	FERNLEY CHAMBER; AMBASSADOR BRKFST; ASST CM	03/31/2023	6.15	04/10/2023	100-413-580 Training	323
8649	NSB - BANKCARD CENTER	MAR 2023	APA; S LEAGUE 2023 PLANNING CONF	03/31/2023	350.00	04/10/2023	100-610-580 Training	323
8649	NSB - BANKCARD CENTER	MAR 2023	APA; S LEAGUE E-LEARNING REG	03/31/2023	180.00	04/10/2023	100-610-580 Training	323
8649	NSB - BANKCARD CENTER	MAR 2023	ZSTAMPER; ENDORSEMENT STAMP; T WOOD	03/31/2023	10.43	04/10/2023	520-810-601 Office Supplies	323
8649	NSB - BANKCARD CENTER	MAR 2023	ZSTAMPER; ENDORSEMENT STAMP; T WOOD	03/31/2023	5.21	04/10/2023	100-417-601 OFFICE SUPPLIES	323
8649	NSB - BANKCARD CENTER	MAR 2023	NNDA BUSINESS EDGE EVENT; DCM ALTICK	03/31/2023	50.00	04/10/2023	100-413-580 Training	323
8649	NSB - BANKCARD CENTER	MAR 2023	SWA; D COLLINS AIRLINE; CM CANIDATE	03/31/2023	837.96	04/10/2023	100-413-582 Travel	323
8649	NSB - BANKCARD CENTER	MAR 2023	RALEYS; FOOD S HENDERSON RETIREMENT	03/31/2023	408.55	04/10/2023	100-412-586 Employee Recognition	323
8649	NSB - BANKCARD CENTER	MAR 2023	TEAMVIEWER; RENEW SUB WW MAR 2023	03/31/2023	1,050.00	04/10/2023	520-810-642 Permits and Licenses	323
8649	NSB - BANKCARD CENTER	MAR 2023	IMAGING SPECTRUM; PASSPORT MEDIA FOR PHOTOS	03/31/2023	294.00	04/10/2023	100-416-600 General Supplies	323
8649	NSB - BANKCARD CENTER	MAR 2023	AMAZON; CFR UNIFORM GUIDANCE BOOKS	03/31/2023	89.94	04/10/2023	100-413-640 Books and Periodicals	323
Total 8649:					12,942.81			

Vendor	Vendor Name	Invoice Number	Description	Invoice Date	Invoice Amount	Date Paid	GL Account and Title	GL Period
NUTRIEN AG SOLUTIONS								
3033	NUTRIEN AG SOLUTIONS	50539427	squirrel feed	04/05/2023	122.50		100-528-617 Supplies-Chemical	423
Total 3033:					122.50			
NV ENERGY								
167	NV ENERGY	26093 APR 23	34596402626093 ACH	04/06/2023	1,888.25	04/24/2023	100-575-622 Electricity	423
167	NV ENERGY	26100 APR 23	34596502626100 ACH	04/06/2023	21,086.47	04/24/2023	510-810-622 Electricity	423
167	NV ENERGY	26100 APR 23	34596502626100 ACH	04/06/2023	40.51	04/24/2023	520-810-622 Electricity	423
167	NV ENERGY	42683 APR 23	82190404842683 ACH	04/06/2023	528.85	04/24/2023	100-575-622 Electricity	423
167	NV ENERGY	42683 APR 23	82190404842683 ACH	04/06/2023	62.74	04/24/2023	100-475-622 Electricity	423
167	NV ENERGY	42683 APR 23	82190404842683 ACH	04/06/2023	7,526.61	04/24/2023	520-810-622 Electricity	423
167	NV ENERGY	42683 APR 23	82190404842683 ACH	04/06/2023	960.86	04/24/2023	510-810-622 Electricity	423
167	NV ENERGY	97899 APR 23	80865904797899 ACH	04/06/2023	16,438.47	04/24/2023	100-475-622 Electricity	423
Total 167:					48,532.76			
OAKES, JUSTIN EDWARD								
8908	OAKES, JUSTIN EDWARD	22 TR 01267 3K	Justin E. Oakes 22TR01267 Todd Droze	03/29/2023	532.00		100-425-325 PROF SERV-CONFLICT COUNS	323
Total 8908:					532.00			
OFFICE DEPOT								
133	OFFICE DEPOT	290104461001	Bus cards council/mayor	02/03/2023	23.09	04/06/2023	100-412-550 Printing and Postage	223
133	OFFICE DEPOT	301429294001	Writing pads/file folders	03/14/2023	306.72	04/06/2023	100-414-600 General Supplies	323
133	OFFICE DEPOT	301429498001	tabs	03/14/2023	52.45	04/06/2023	100-414-600 General Supplies	323
133	OFFICE DEPOT	302607589001	Tape; whiteout	03/23/2023	36.42	04/06/2023	510-840-601 Office Supplies	323
133	OFFICE DEPOT	302618585001	Moving tape	03/23/2023	21.89	04/06/2023	510-840-601 Office Supplies	323
133	OFFICE DEPOT	304816749001	Toner	03/30/2023	126.36		520-810-601 Office Supplies	323
133	OFFICE DEPOT	305612652001	Ten Key Calculator and Front Counter Fastened Pens	03/31/2023	127.88		100-425-600 General Supplies	323
133	OFFICE DEPOT	305614721001	Packing Tape and Pens	03/31/2023	26.97		100-425-600 General Supplies	323
133	OFFICE DEPOT	305614722001	Front Office Toner	03/31/2023	211.98		100-425-600 General Supplies	323
133	OFFICE DEPOT	305614723001	Public Terminal Card Holder	03/31/2023	3.29		100-425-600 General Supplies	323
133	OFFICE DEPOT	305795902001	Year 2023 label stickers	03/25/2023	25.19	04/06/2023	100-525-601 Office Supplies	323
133	OFFICE DEPOT	306948797001	Office Supplies	04/01/2023	71.90		100-605-601 Office Supplies	423
133	OFFICE DEPOT	306949502001	Adhesive name plate	04/03/2023	44.19		100-605-601 Office Supplies	423
Total 133:					1,078.33			
O'REILLY AUTO PARTS								
6230	O'REILLY AUTO PARTS	3599-238242	oil for streets dump truck	03/28/2023	119.99	04/06/2023	100-475-430 Service-Repair and Maintenance	323
6230	O'REILLY AUTO PARTS	3599-239069	DAMPER	04/04/2023	81.26		510-810-610 Automotive Supplies	423
6230	O'REILLY AUTO PARTS	3599-239529	door handle for 5002	04/07/2023	89.99		510-810-610 Automotive Supplies	423

Vendor	Vendor Name	Invoice Number	Description	Invoice Date	Invoice Amount	Date Paid	GL Account and Title	GL Period
	Total 6230:				291.24			
OWEN EQUIPMENT								
7965	OWEN EQUIPMENT	59328	PTO switch for the streets vactor	03/13/2023	414.72	04/06/2023	100-475-430 Service-Repair and Maintenance	323
	Total 7965:				414.72			
PACIFIC STORAGE COMPANY								
8876	PACIFIC STORAGE COMPANY	5149890	Shred Bin March	03/09/2023	16.50		100-425-322 Prof Serv-Other	323
8876	PACIFIC STORAGE COMPANY	5153596	Shred Bin April	04/05/2023	16.50		100-425-322 Prof Serv-Other	423
	Total 8876:				33.00			
PDM								
139	PDM	033123	Late fee for Feb 2023 invoice	03/31/2023	6.81	04/06/2023	100-575-600 General Supplies	323
139	PDM	507462-01	STEEL FOR PARKS GATES	02/13/2023	453.79	04/06/2023	100-575-600 General Supplies	223
	Total 139:				460.60			
PR DIAMOND PRODUCTS, INC.								
8492	PR DIAMOND PRODUCTS, INC.	64022-IN	saw blades for fleet	03/29/2023	254.00	04/06/2023	100-480-610 AUTOMOTIVE SUPPLIES	323
	Total 8492:				254.00			
PUBLIC AGENCY COMPENSATION TRU								
145	PUBLIC AGENCY COMPENSATION TRU	3RD QTR 22/23	WORKERS COMP 3RD QTR 22-23	03/31/2023	31,872.50	03/31/2023	100-219000 WORKERS COMPENSATION PA	323
	Total 145:				31,872.50			
PUBLIC EMPLOYEES RETIREMENT SYSTEM								
144	PUBLIC EMPLOYEES RETIREMENT SYSTEM	MAR 2023	#621 RETIREMENT CONTRIBUTIONS	03/31/2023	110,678.98		100-216000 RETIREMENT PAYABLE	323
	Total 144:				110,678.98			
PURCHASE POWER								
3155	PURCHASE POWER	69812 APR 23	POSTAGE - WATER	04/03/2023	98.00	04/30/2023	510-810-550 Printing and Postage	423
3155	PURCHASE POWER	69812 APR 23	POSTAGE - CITY MANAGER	04/03/2023	25.94	04/30/2023	100-413-550 Printing and Postage	423
3155	PURCHASE POWER	69812 APR 23	POSTAGE - ANIMAL CONTROL	04/03/2023	76.39	04/30/2023	100-525-550 Printing and Postage	423
3155	PURCHASE POWER	69812 APR 23	POSTAGE - BUILDING	04/03/2023	1.67	04/30/2023	100-605-550 Printing and Postage	423
3155	PURCHASE POWER	69812 APR 23	POSTAGE - FINANCE	04/03/2023	193.89	04/30/2023	100-415-550 Printing and Postage	423
3155	PURCHASE POWER	69812 APR 23	POSTAGE - PARKS	04/03/2023	.69	04/30/2023	100-575-550 Printing and Postage	423
3155	PURCHASE POWER	69812 APR 23	POSTAGE - PLANNING	04/03/2023	1.39	04/30/2023	100-610-550 Printing and Postage	423
3155	PURCHASE POWER	69812 APR 23	POSTAGE - CLERK	04/03/2023	1,772.66	04/30/2023	100-416-550 Printing and Postage	423

Vendor	Vendor Name	Invoice Number	Description	Invoice Date	Invoice Amount	Date Paid	GL Account and Title	GL Period
3155	PURCHASE POWER	69812 APR 23	POSTAGE - CITY ATTORNEY	04/03/2023	55.22	04/30/2023	100-414-550 Printing and Postage	423
3155	PURCHASE POWER	69812 APR 23	POSTAGE - COURT	04/03/2023	270.15	04/30/2023	100-425-550 Printing and Postage	423
	Total 3155:				2,496.00			
QUADIENT LEASING USA, INC.								
8737	QUADIENT LEASING USA, INC.	N9882255	IN HOUSE LEASE	03/31/2023	2,805.96	04/06/2023	510-810-441 Rental	323
8737	QUADIENT LEASING USA, INC.	N9882255	IN HOUSE LEASE	03/31/2023	2,805.96	04/06/2023	520-810-441 Rental	323
	Total 8737:				5,611.92			
RENO GAZETTE JOURNAL								
152	RENO GAZETTE JOURNAL	5490065	5636780 - Bill #324 legal notice	03/31/2023	175.00	04/06/2023	100-610-540 Advertising	323
152	RENO GAZETTE JOURNAL	5490065	5616945 - Bill #324 pr	03/31/2023	167.00	04/06/2023	100-416-540 Advertising	323
152	RENO GAZETTE JOURNAL	5490065	5639827 - CUP23001 cond use permit	03/31/2023	131.00	04/06/2023	100-610-540 Advertising	323
	Total 152:				473.00			
RENO ROCK TRANSPORT								
7002	RENO ROCK TRANSPORT	167314	infield mix OTP	03/28/2023	3,616.00		100-575-600 General Supplies	323
7002	RENO ROCK TRANSPORT	176348	infield mix OTP	03/30/2023	1,888.00		100-575-600 General Supplies	323
	Total 7002:				5,504.00			
RESOURCE CONCEPTS								
8602	RESOURCE CONCEPTS	23-0414	Water Right Services from Jan 31, 2022 thru Feb 28, 2023	03/31/2023	2,899.25		510-810-698 Water Rights Protection	323
8602	RESOURCE CONCEPTS	23-0415	Water Rights accounting Database	03/31/2023	1,550.00		510-810-698 Water Rights Protection	323
8602	RESOURCE CONCEPTS	23-0419	RCI PROFESSIONAL SERVICES THROUGH 03/31/2023	03/31/2023	2,175.00		220-480-810 ARPA	323
	Total 8602:				6,624.25			
SIERRA NEVADA CONSTRUCTION INC								
287	SIERRA NEVADA CONSTRUCTION INC	PAY2	Cottonwood lane reconstruction project	02/28/2023	252,813.74	04/06/2023	100-475-745 RTC REIMBURSABLE EXPENDI	223
287	SIERRA NEVADA CONSTRUCTION INC	PAY2	Cottonwood lane sewer rehabilitation	02/28/2023	49,381.00	04/06/2023	520-166100 Construction In Progress	223
287	SIERRA NEVADA CONSTRUCTION INC	PAY2	Cottonwood lane water line replacement	02/28/2023	244,530.00	04/06/2023	510-166100 Construction In Progress	223
	Total 287:				546,724.74			
SIGNA MECHANICAL								
6530	SIGNA MECHANICAL	230327	E-One pumps	04/03/2023	7,351.31		520-810-615 E-One R & M	423
	Total 6530:				7,351.31			

Vendor	Vendor Name	Invoice Number	Description	Invoice Date	Invoice Amount	Date Paid	GL Account and Title	GL Period
SILVER STATE ANALYTICAL LABORATORIES								
7856	SILVER STATE ANALYTICAL LABORATORIES	RN298581	Cottonwood lane project- first day samples	04/07/2023	240.00		510-810-423 Contract Services-ANALYTICAL	423
	Total 7856:				240.00			
SJC LIMITED								
8580	SJC LIMITED	13950	base rock for flood	03/27/2023	4,009.39	04/06/2023	100-475-600 General Supplies	323
	Total 8580:				4,009.39			
SONSRAY MACHINERY LLC								
7773	SONSRAY MACHINERY LLC	pso068029-1	credit on account	03/15/2023	8.37-	04/06/2023	100-475-430 Service-Repair and Maintenance	323
7773	SONSRAY MACHINERY LLC	pso068029-1	glass for loader	03/15/2023	295.34	04/06/2023	100-475-430 Service-Repair and Maintenance	323
	Total 7773:				286.97			
SOUTHWEST GAS CORP								
204	SOUTHWEST GAS CORP	18971 MAR 23	910000818971 ACH	03/20/2023	30.24	04/10/2023	520-810-621 Natural Gas	323
204	SOUTHWEST GAS CORP	33096 FEB 23	910001133096 ACH	03/29/2023	885.59	04/17/2023	510-810-621 Natural Gas	323
204	SOUTHWEST GAS CORP	33438 APR 23	910001133438 ACH	03/24/2023	2,294.74	04/12/2023	100-417-621 Natural Gas	323
204	SOUTHWEST GAS CORP	86744 FEB 23	910001086744 WTP	03/15/2023	5,312.78	04/03/2023	510-840-621 Natural Gas	323
	Total 204:				8,523.35			
STATE COLLECTION & DISB. UNIT (SCaDU)								
176	STATE COLLECTION & DISB. UNIT (SCaDU)	APR 2023-1	CHILD SUPPORT	04/07/2023	319.84		100-219900 OTHER PAYROLL PAYABLES	423
	Total 176:				319.84			
THATCHER COMPANY, INC.								
8646	THATCHER COMPANY, INC.	2023400111142	Sierra Pure Chlor	04/05/2023	873.49		510-810-617 Supplies-Chemical	423
8646	THATCHER COMPANY, INC.	2023400111143	Chemical delivery Well 14 & N.E. Booster	04/04/2023	873.49		510-810-617 Supplies-Chemical	423
	Total 8646:				1,746.98			
TSK								
8714	TSK	21-058.00-13	CRRC Schematic Design-Design Dev 3/1/23 - 3/31/23	03/31/2023	119,892.00		220-480-810 ARPA	323
	Total 8714:				119,892.00			
U S POSTAL SERVICE								
7344	U S POSTAL SERVICE	4/2023	PREPAID IN-HOUSE POSTAGE	04/01/2023	250.00	04/10/2023	520-810-550 Printing and Postage	423
7344	U S POSTAL SERVICE	4/2023	PREPAID IN-HOUSE POSTAGE	04/01/2023	250.00	04/10/2023	510-810-550 Printing and Postage	423

Vendor	Vendor Name	Invoice Number	Description	Invoice Date	Invoice Amount	Date Paid	GL Account and Title	GL Period
	Total 7344:				500.00			
VERUS ASSOCIATES NEVADA, LLC								
8606	VERUS ASSOCIATES NEVADA, LLC	2207	Multiple site SCADA support	03/31/2023	1,821.94		520-810-429 Contract Services-SCADA	323
	Total 8606:				1,821.94			
VOYA FINANCIAL								
8591	VOYA FINANCIAL	APR 2023-1	ROTH IRA	04/07/2023	150.00	04/07/2023	100-215000 457 PAYABLE	423
8591	VOYA FINANCIAL	APR 2023-1	DEFERRED COMPENSATION, 457	04/07/2023	3,884.00	04/07/2023	100-215000 457 PAYABLE	423
8591	VOYA FINANCIAL	MAR 2023-2	ROTH IRA	03/24/2023	150.00	03/24/2023	100-215000 457 PAYABLE	323
8591	VOYA FINANCIAL	MAR 2023-2	DEFERRED COMPENSATION, 457	03/24/2023	3,814.00	03/24/2023	100-215000 457 PAYABLE	323
	Total 8591:				7,998.00			
WALKER LAKE DISPOSAL								
6118	WALKER LAKE DISPOSAL	23-1342	WWTP dumpster service	04/05/2023	297.00	04/06/2023	520-810-412 Utility Service-Refuse	423
	Total 6118:				297.00			
WASTE MANAGEMENT								
447	WASTE MANAGEMENT	33001 APR 23	11-60772-33001	04/05/2023	103.14		100-417-412 Utility Services-Refuse	423
447	WASTE MANAGEMENT	33005 APR 23	11-60745-33005	04/05/2023	14.39		510-840-412 Utility Service-Refuse	423
447	WASTE MANAGEMENT	33009 APR 23	11-60774-33009	04/05/2023	84.39		510-810-412 Utility Service-Refuse	423
447	WASTE MANAGEMENT	43003 APR 23	11-60760-43003	04/05/2023	42.20		520-810-412 Utility Service-Refuse	423
447	WASTE MANAGEMENT	63002 MAR 23	11-74239-63002	04/03/2023	731.18	04/06/2023	100-575-412 Utility Service-Refuse	423
447	WASTE MANAGEMENT	65007 MAR 23	6-82641-65007	04/03/2023	93.53	04/06/2023	100-417-412 Utility Services-Refuse	423
447	WASTE MANAGEMENT	95009 MAR 23	8-29467-95009	04/03/2023	448.45	04/06/2023	100-575-412 Utility Service-Refuse	423
	Total 447:				1,517.28			
WEDCO								
3350	WEDCO	S100005704.001	fuses for ball field lights	03/30/2023	137.69		100-575-612 Building Maintenance Supplies	323
	Total 3350:				137.69			
WESTERN NEVADA SUPPLY CO.								
195	WESTERN NEVADA SUPPLY CO.	19638752	Propagation Study	03/20/2023	.05		510-810-320 Prof Serv-Engineering	323
195	WESTERN NEVADA SUPPLY CO.	19679887	bin stock	03/24/2023	2,462.26	04/06/2023	510-810-614 Supplies-Plant/Shop/Maint	323
195	WESTERN NEVADA SUPPLY CO.	19685244	PS Misc parts	03/30/2023	230.14		510-840-430 Service-Repair and Maintenance	323
195	WESTERN NEVADA SUPPLY CO.	19685245	PS parts/supplies	04/06/2023	118.95		510-840-614 Plant/Shop/Maint. Supplies	423
195	WESTERN NEVADA SUPPLY CO.	19685280	PS parts/supplies	04/06/2023	28.32		510-840-614 Plant/Shop/Maint. Supplies	423

Vendor	Vendor Name	Invoice Number	Description	Invoice Date	Invoice Amount	Date Paid	GL Account and Title	GL Period
	Total 195:				2,839.72			
WETLAB - WESTERN ENVIRON TESTING LAB								
8709	WETLAB - WESTERN ENVIRON TESTING LAB	23030669	March Fecal re-test	04/05/2023	23.52		520-810-423 Contract Services-ANALYTICAL	423
	Total 8709:				23.52			
XPRESS BILL PAY LLC								
2468	XPRESS BILL PAY LLC	MAR 2023	CREDIT CARD PROCESSING FEES	03/31/2023	1,556.07	03/31/2023	510-810-609 Credit Card Fees	323
2468	XPRESS BILL PAY LLC	MAR 2023	CREDIT CARD PROCESSING FEES	03/31/2023	1,556.07	03/31/2023	520-810-609 Credit Card Fees	323
	Total 2468:				3,112.14			
YESCO, LLC								
6806	YESCO, LLC	INY-0425963	ball field lights	03/28/2023	1,510.70	04/06/2023	100-575-428 Contract Services-ELECTRICAL	323
6806	YESCO, LLC	INY-0426678	field lights	03/31/2023	810.00		100-575-600 General Supplies	323
	Total 6806:				2,320.70			
	Grand Totals:				1,363,982.19			

Dated: _____

Mayor: _____

City Treasurer: _____

Report Criteria:

Detail report.

Invoice detail records above $0 included.

Paid and unpaid invoices included.

Vendor.Vendor Number = {<>} 2201

Report Criteria:
License.Status = "Active"
Business.Origination date = 3/30/2023-04/12/2023

Business Name	Name	Location	Location City	Location State	Location Zip	Business Tel	Description	Occupation
Work in Progress Fitness, LLC	Karen L. Pugh	5940 S. Rainbow Blvd. Ste #	Las Vegas	NV	89118	775-560-3106	Fitness\Weight\Health Se	Online Fitness Coach
Herron Home Inspections	Matthew Herron	17568 Sunstone Ct	Reno	NV	89508	775-530-1554	Inspection Services	Home Inspection Services
Slug Mug	Jeffery Blevins	930 Brigit Cir	Fernley	NV	89408	775-360-0837	Wholesale and/or Retail	Custom mug, t-shirt and merch
Rod's Model Railroad Services LLC	Rodney Ivan Hender	159 Westward Lane	Fernley	NV	89408	775-404-5584	Business Specific Profes	Model railroad and supply sale
Nancy Baker Rifkin	Nancy L. Baker	1359 Horse Creek Way	Fernley	NV	89408	415-990-8429	Business Specific Profes	Writer, book sales through Am
Mountain Vista Roof Systems	David Lytle	19 Glen Carran Cir	Sparks	NV	89431	775-431-6367	Contractor	Roofing Contractor #90023
Summit Properties and Developme	Carl Matisse	6445 Citation Dr. Suite G	Clarkston	MI	48346	248-625-4711	Contractor	General Contractor #86243
Andy's Lock & Key LLC	Johnathan Anderson/	199 E. Plumb Lane	Reno	NV	89502	775-322-8588	Locksmith	Locksmith
Michael G. Duncan	Michael G. Duncan	945 Lasso Way	Fernley	NV	89408	775-433-5787	Real Estate	Real Estate Sales
Northern Nevada Handyman Servic	Nick Magazu	626 Tamsen Road	Fernley	NV	89408	408-516-7806	Handyman	Handyman
Rhines Operational Solutions, LLC	Adrian Rhines	744 Canary Circle	Fernley	NV	89408	775-342-7283	Equipment Rentals, Supp	Children's party rental supply c

Grand Totals:
11

Report Criteria:
License.Status = "Active"
Business.Origination date = 3/30/2023-04/12/2023

CITY OF FERNLEY

City Council
AGENDA REPORT

Meeting Date: April 19, 2023

REPORT TO:	Mayor and City Council
REPORT FROM:	**Jessica Dover**

FINANCIAL IMPACT:		**CURRENTLY BUDGETED:**		**FUND/ACCOUNT:**
Yes: X	No:	Yes: X	No:	520-166-100

ACTION REQUESTED: Consent

AGENDA ITEM: (For Possible Action):

Possible Action to Award a Contract for Construction for the US 50A/95A Sanitary Sewer Improvement Project (Project) to: Farr Construction Corporation dba. Resource Development Company (RDC), in an amount not to exceed $341,220.

AGENDA ITEM BRIEF:

The proposed major work items include, but are not limited to: Rehabilitation of Sanitary Sewer Manholes (SSMHs), installation of a precast polymer manhole, connection of existing Sanitary Sewer pipe to new manhole, installing Forcemain appurtenances including 4-inch tee with plug valves and temporary HDPE Bypass line, trenching and excavation, and bypass pumping.

RECOMMENDED MOTION:

"I move to Award a Contract for Construction for the US 50A/95A Sanitary Sewer Improvement Project (Project) to: Farr Construction Corporation dba. Resource Development Company (RDC), in an amount not to exceed $341,220."

BUSINESS IMPACT (per NRS Chapter 237):

A Business Impact Statement is not required because this is not a rule (term excludes vehicles by which

legislative powers are exercised under NRS Chapters 271, 278, 278A, or 278B).

See attached report for background, analysis, alternatives.

ALTERNATIVES:

1. City Council may award the proposed Contract for Construction Services to Resource Development Company (RDC)
2. City Council may reject the proposed Contract and provide additional direction to the City Manager

BACKGROUND:

PROJECT SUMMARY

The proposed major work items include, but are not limited to: Rehabilitation of Sanitary Sewer Manholes (SSMHs), installation of a precast polymer manhole, connection of existing Sanitary Sewer pipe to new manhole, installing Forcemain appurtenances including 4-inch tee with plug valves and temporary HDPE Bypass line, trenching and excavation, and bypass pumping.

The Project was advertised in the Reno Gazette Journal, and the Lyon County News Leader between the dates of March 15, 2023 to April 05, 2023. Staff opened bids on April 05, 2023. The list of bidders and total bid prices for the Project are included in Lumos' Recommendation of Award, attached.

After reviewing the bids and conferring with the City's Project consultants, Lumos and Associates, Inc., Staff recommends awarding the Contract to Farr Construction Corporation dba. Resource Development Company (RDC).

Lumos and Associates, Inc. (Lumos) has assisted many agencies in northern Nevada with Engineering Design and Construction Management Services for similar Wastewater Improvement Projects. They prepared plans, specifications and estimates for the Project, and will be providing applicable Construction Management Services including inspection and materials testing.

BACKGROUND

The intent of this Project as originally included in the FY 21/22 Budget, was to upgrade a portion of sewer infrastructure through the US 50A/95A corridor located outside of the pavement section previously reconstructed as part of the NDOT Improvements completed under State Contract 3829.

The proposed scope of Improvements included: remove/replace (3) existing SSMHs, evaluate and replace approximately 140 LF of sewer pipe along the existing bridge at Canal RD on the east side of US 50A/95A, re-route existing conduit bank previously discovered during Construction of NDOT E.A. 74038 and install (3) valves along the existing Force Main located at the south side of Sage DR.

30% design was completed for this Project in October 2021. The existing Sewer crossing located at the Canal RD bridge on the east side of US 50A/95A consists of two pipes: an outer steel casing and an inner (carrier) pipe that serves as the sewer main. The City's Wastewater Division performed a CCTV investigation of the inner pipe in early November 2021. During the work, the sewer camera broke through the inner pipe, its tethering cable severed and the camera became lodged within the carrier pipe adding blockage to the interior pipe which was

already in poor condition. As a result, this portion of the Project became an Emergency Repair and the proposed Force Main upgrades located at the south side of Sage DR were temporarily put on hold so that Staff could concentrate efforts on completion of the Emergency Repair Work.

Emergency Repair Work was Substantially Complete in March 2022. This Work replaced approximately 140 LF of sewer main at the canal crossing. Two (2) associated SSMHs; (1) located upstream and (1) located downstream from the crossing were replaced as well. A new SSMH was installed south of the crossing to perpetuate bypass pumping efficiency during completion of the emergency repairs and to accommodate future sanitary sewer work and/or maintenance in the area. Ownership of the existing conduit bank previously discovered during Construction of NDOT E.A. 74038 was resolved during completion of the Emergency Repair as well.

The US 50A/95A Sanitary Sewer Improvements and Sage Force Main Valve Installation Project (Project) was approved as part of the FY 22/23 Budget with the intent of completing upgrades to the Force Main located at the south side of Sage DR. 60% design has been completed for the Project. Additional expenses were incurred from completing a portion of the Project as an Emergency Repair during FY 21/22. Amendment No. 1 to the Engineering Services Contract, approved December 21, 2022, was required for Lumos to complete design of the FY 22/23 Phase of the Project.

Exploratory pothole activities were completed by Lumos in May 2022 which confirmed the existing force main material type as Sch40 PVC. These findings contributed to Lumos' subsequent recommendation to City to replace the existing force main in its entirety simultaneously with proposed valve installation. Due to this additional force main replacement cost, potential necessity to upsize the line in the event of future development in the area, and further consideration of the system as related to operational practicality should valves be installed on the force main, Staff decided to scale this Project back to SSMH replacement and rehabilitation Work Items only; the force main will not be replaced nor valves installed as part of this Project. As approved by City Council in December 2022, the modified Scope to complete the Project will include: replacement of SSMH No. 25, located near the Sage DR/US 50A/95A intersection, and structural lining of (5) downstream SSMHs, previously installed as part of the NDOT Project and FY 21/22 Emergency Repair Work.

RELEVANT LAWS, STATUTES, AND REGULATIONS:
Nevada Statutes:

- NRS 625.050 Practice of Professional Engineering
- NRS 625.530 Section 3 Restrictions upon Public Works
- NRS 332.115.b
- NRS 338

FINANCIAL IMPLICATIONS:
Project appropriations are included in the approved FY 2023 Budget as part of the Capital Improvement Plan:

- $710,000 (520-166-100), US 50A/95A Sewer Improvements and Sage Force Main Valve Installation (Page 219, A-73)
- Construction Services and all remaining Engineering Services for the Project will be paid from the City's ARPA Funds

Proposed Contract for Construction Service

City of Fernley Standard Agreement for Construction Services, **RDC** (attached)

Total Base Bid	$341,220.00
Total Options (N/A)	$0.00
Total (Base Bid and all Options):	**$341,220.00**

Existing Contracts, US 50A/95A Sanitary Sewer Improvement Project

Lumos Standard Contract for ENGR Services (with Amendment No. 1)	$131,840
A&K Earth Movers, Inc. Contract for Construction	$578,850
Total (E) Contracts (Including OPTIONAL Services):	**$710,690**

Estimated Actuals to date, US 50A/95A Sanitary Sewer Improvement Project

Lumos Standard Contract for ENGR Services	$106,242.80
A&K Earth Movers, Inc. Contract for Construction (Final Contract Amount)	$486,900
Total Actuals (Including OPTIONAL Services):	**$593,142.80**

Projected Expenditures Remaining, US 50A/95A Sanitary Sewer Improvement Project

Lumos Standard Contract for ENGR Services (with Amendment No. 1)	$25,597.20
A&K Earth Movers, Inc. Contract for Construction	$0
RDC Contract for Construction	$341,220.00
Total:	**$366,817.20**

ATTACHMENTS:

1. 2023.04.19 RDC Agreement SP
2. US50.95A Sewer Improvement Project_Recommendation for Award_04.6.2023

AGREEMENT
BETWEEN OWNER AND CONTRACTOR
FOR CONSTRUCTION CONTRACT (STIPULATED PRICE)

THIS AGREEMENT is by and between **City of Fernley** ("Owner") and Farr Construction Corporation dba. Resource Development Company ("Contractor").

Owner and Contractor hereby agree as follows:

ARTICLE 1 – WORK

1.01 *Contractor shall complete all Work as specified or indicated in the Contract Documents.*

The Work generally includes, but is not limited to: Rehabilitation of Sanitary Sewer Manholes, Installation of a Precast Polymer Manhole, Connection of existing Sanitary Sewer pipe to new manhole, installing Forcemain Appurtenances, Trenching and Excavation, and Bypass Pumping.

ARTICLE 2 – THE PROJECT

2.01 The Project, of which the Work under the Contract Documents is a part, is generally described as follows: **US50A/US95A Sanitary Sewer Improvements Project.**

ARTICLE 3 – ENGINEER

3.01 The Project has been designed by **Lumos & Associates, Inc**.

3.02 The Owner has retained **Lumos & Associates, Inc.** ("Engineer") to act as Owner's representative, assume all duties and responsibilities, and have the rights and authority assigned to Engineer in the Contract Documents in connection with the completion of the Work in accordance with the Contract Documents.

ARTICLE 4 – CONTRACT TIMES

4.01 *Time of the Essence*

A. All time limits for Milestones, if any, Substantial Completion, and completion and readiness for final payment as stated in the Contract Documents are of the essence of the Contract.

4.02 *Contract Times: Days*

A. The Work will be substantially completed within **30** days after the date when the Contract Times commence to run as provided in Paragraph 4.01 of the General Conditions, and completed and ready for final payment in accordance with Paragraph 15.06 of the General Conditions within **45** days after the date when the Contract Times commence to run.

4.03 *Liquidated Damages*

A. Contractor and Owner recognize that time is of the essence as stated in Paragraph 4.01 above and that Owner will suffer financial and other losses if the Work is not completed and Milestones not achieved within the times specified in Paragraph 4.02 above, plus any extensions thereof allowed in accordance with the Contract. The parties also recognize the

Copyright © 2013 All rights reserved.

delays, expense, and difficulties involved in proving in a legal or arbitration proceeding the actual loss suffered by Owner if the Work is not completed on time. Accordingly, instead of requiring any such proof, Owner and Contractor agree that as liquidated damages for delay (but not as a penalty):

1. Substantial Completion: Contractor shall pay Owner **$2,500** for each day that expires after the time (as duly adjusted pursuant to the Contract) specified in Paragraph 4.02.A above for Substantial Completion until the Work is substantially complete.
2. Completion of Remaining Work: After Substantial Completion, if Contractor shall neglect, refuse, or fail to complete the remaining Work within the Contract Time (as duly adjusted pursuant to the Contract) for completion and readiness for final payment, Contractor shall pay Owner **$500** for each day that expires after such time until the Work is completed and ready for final payment.
3. Liquidated damages for failing to timely attain Substantial Completion and final completion are not additive and will not be imposed concurrently.

ARTICLE 5 – CONTRACT PRICE

5.01 Owner shall pay Contractor for completion of the Work in accordance with the Contract Documents the amounts that follow, subject to adjustment under the Contract:

A. For all Work, at the prices stated in Contractor's Bid, attached hereto as an exhibit.

ARTICLE 6 – PAYMENT PROCEDURES

6.01 *Submittal and Processing of Payments*

A. Contractor shall submit Applications for Payment in accordance with Article 15 of the General Conditions. Applications for Payment will be processed by Engineer as provided in the General Conditions.

6.02 *Progress Payments; Retainage*

A. Owner shall make progress payments on account of the Contract Price on the basis of Contractor's Applications for Payment on or about the first day of each month during performance of the Work as provided in Paragraph 6.02.A.1 below, provided that such Applications for Payment have been submitted in a timely manner and otherwise meet the requirements of the Contract. All such payments will be measured by the Schedule of Values established as provided in the General Conditions (and in the case of Unit Price Work based on the number of units completed) or, in the event there is no Schedule of Values, as provided elsewhere in the Contract.

1. Prior to Substantial Completion, progress payments will be made in an amount equal to the percentage indicated below but, in each case, less the aggregate of payments previously made and less such amounts as Owner may withhold, including but not limited to liquidated damages, in accordance with the Contract

a. **95** percent of Work completed (with the balance being retainage). If the Work has been 50 percent completed as determined by Engineer, and if the character and progress of the Work have been satisfactory to Owner and Engineer, then as long as the character and progress of the Work remain satisfactory to Owner and Engineer, there will be no additional retainage; and

Copyright © 2013 All rights reserved.

b. **95** percent of cost of materials and equipment not incorporated in the Work (with the balance being retainage).

B. Upon Substantial Completion, Owner shall pay an amount sufficient to increase total payments to Contractor to **95** percent of the Work completed, less such amounts set off by Owner pursuant to Paragraph 15.01.E of the General Conditions, and less **100** percent of Engineer's estimate of the value of Work to be completed or corrected as shown on the punch list of items to be completed or corrected prior to final payment.

6.03 *Final Payment*

A. Upon final completion and acceptance of the Work in accordance with Paragraph 15.06 of the General Conditions, Owner shall pay the remainder of the Contract Price as recommended by Engineer as provided in said Paragraph 15.06.

ARTICLE 7 – NOT USED

ARTICLE 8 – CONTRACTOR'S REPRESENTATIONS

8.01 In order to induce Owner to enter into this Contract, Contractor makes the following representations:

A. Contractor has examined and carefully studied the Contract Documents, and any data and reference items identified in the Contract Documents.

B. Contractor has visited the Site, conducted a thorough, alert visual examination of the Site and adjacent areas, and become familiar with and is satisfied as to the general, local, and Site conditions that may affect cost, progress, and performance of the Work.

C. Contractor is familiar with and is satisfied as to all Laws and Regulations that may affect cost, progress, and performance of the Work.

D. Contractor has carefully studied all: (1) reports of explorations and tests of subsurface conditions at or adjacent to the Site and all drawings of physical conditions relating to existing surface or subsurface structures at the Site that have been identified in the Supplementary Conditions, especially with respect to Technical Data in such reports and drawings, and (2) reports and drawings relating to Hazardous Environmental Conditions, if any, at or adjacent to the Site that have been identified in the Supplementary Conditions, especially with respect to Technical Data in such reports and drawings.

E. Contractor has considered the information known to Contractor itself; information commonly known to contractors doing business in the locality of the Site; information and observations obtained from visits to the Site; the Contract Documents; and the Site-related reports and drawings identified in the Contract Documents, with respect to the effect of such information, observations, and documents on (1) the cost, progress, and performance of the Work; (2) the means, methods, techniques, sequences, and procedures of construction to be employed by Contractor; and (3) Contractor's safety precautions and programs.

F. Based on the information and observations referred to in the preceding paragraph, Contractor agrees that no further examinations, investigations, explorations, tests, studies, or data are necessary for the performance of the Work at the Contract Price, within the Contract Times, and in accordance with the other terms and conditions of the Contract.

G. Contractor is aware of the general nature of work to be performed by Owner and others at the Site that relates to the Work as indicated in the Contract Documents.

Copyright © 2013 All rights reserved.

H. Contractor has given Engineer written notice of all conflicts, errors, ambiguities, or discrepancies that Contractor has discovered in the Contract Documents, and the written resolution thereof by Engineer is acceptable to Contractor.

I. The Contract Documents are generally sufficient to indicate and convey understanding of all terms and conditions for performance and furnishing of the Work.

J. Contractor's entry into this Contract constitutes an incontrovertible representation by Contractor that without exception all prices in the Agreement are premised upon performing and furnishing the Work required by the Contract Documents.

ARTICLE 9 – CONTRACT DOCUMENTS

9.01 *Contents*

A. The Contract Documents consist of the following:

1. This Agreement (pages 1 to 8, inclusive).
2. Performance bond (pages 1 to 3, inclusive).
3. Payment bond (pages 1 to 4, inclusive).
4. Other bonds. None
5. General Conditions (pages 1 to 66, inclusive).
6. Supplementary Conditions (pages 1 to 12, inclusive).
7. 2023 Prevailing Wage Rates: Northern Nevada Rural Counties
8. Provisions of Nevada Revised Statute Chapter 338 (00521)
9. City of Fernley Division of Safety Form (00522)
10. Specifications as listed in the table of contents of the Project Manual.
11. Drawings (not attached but incorporated by reference).
12. Addenda (numbers ___ to ___, inclusive).
13. Exhibits to this Agreement (enumerated as follows):
    a. Contractor's Bid (00410-1 thru 8, 00440-1 thru 3, and 00450-1 thru 3)
14. The following which may be delivered or issued on or after the Effective Date of the Contract and are not attached hereto:
    a. Notice to Proceed.
    b. Work Change Directives.
    c. Change Orders.
    d. Field Orders.

B. The documents listed in Paragraph 9.01.A are attached to this Agreement (except as expressly noted otherwise above).

C. There are no Contract Documents other than those listed above in this Article 9.

D. The Contract Documents may only be amended, modified, or supplemented as provided in the General Conditions.

Copyright © 2013 All rights reserved.

ARTICLE 10 – MISCELLANEOUS

10.01 *Terms*

A. Terms used in this Agreement will have the meanings stated in the General Conditions and the Supplementary Conditions.

10.02 *Assignment of Contract*

A. Unless expressly agreed to elsewhere in the Contract, no assignment by a party hereto of any rights under or interests in the Contract will be binding on another party hereto without the written consent of the party sought to be bound; and, specifically but without limitation, money that may become due and money that is due may not be assigned without such consent (except to the extent that the effect of this restriction may be limited by law), and unless specifically stated to the contrary in any written consent to an assignment, no assignment will release or discharge the assignor from any duty or responsibility under the Contract Documents.

10.03 *Successors and Assigns*

A. Owner and Contractor each binds itself, its successors, assigns, and legal representatives to the other party hereto, its successors, assigns, and legal representatives in respect to all covenants, agreements, and obligations contained in the Contract Documents.

10.04 *Severability*

A. Any provision or part of the Contract Documents held to be void or unenforceable under any Law or Regulation shall be deemed stricken, and all remaining provisions shall continue to be valid and binding upon Owner and Contractor, who agree that the Contract Documents shall be reformed to replace such stricken provision or part thereof with a valid and enforceable provision that comes as close as possible to expressing the intention of the stricken provision.

10.05 *Contractor's Certifications*

A. Contractor certifies that it has not engaged in corrupt, fraudulent, collusive, or coercive practices in competing for or in executing the Contract. For the purposes of this Paragraph 10.05:

1. "corrupt practice" means the offering, giving, receiving, or soliciting of any thing of value likely to influence the action of a public official in the bidding process or in the Contract execution;

2. "fraudulent practice" means an intentional misrepresentation of facts made (a) to influence the bidding process or the execution of the Contract to the detriment of Owner, (b) to establish Bid or Contract prices at artificial non-competitive levels, or (c) to deprive Owner of the benefits of free and open competition;

3. "collusive practice" means a scheme or arrangement between two or more Bidders, with or without the knowledge of Owner, a purpose of which is to establish Bid prices at artificial, non-competitive levels; and

4. "coercive practice" means harming or threatening to harm, directly or indirectly, persons or their property to influence their participation in the bidding process or affect the execution of the Contract.

Copyright © 2013 All rights reserved.

10.06 *Other Provisions*

A. Owner stipulates that the General Conditions that are made a part of this Contract are based on EJCDC® C-700, Standard General Conditions for the Construction Contract, published by the Engineers Joint Contract Documents Committee® and Owner has plainly shown all modifications to the standard wording of such published document to the Contractor, through the Supplementary Conditions.

B. Contractor and its subcontractors shall comply with the requirements of the Civil Rights Act of 1964, as amended, Title IX of the Education Amendments of 1972, the Rehabilitation Act of 1973, P.L. 93-112, as amended, the age discrimination Act of 1975 and any relevant program-specific regulations (including those with anti-discrimination requirements), and shall not discriminate against any employee or offeror for employment because of race, national origin, creed, color, sex, sexual orientation, gender identity or expression, religion, age, disability or handicap condition (including AIDS and AIDS-related conditions). Such agreement shall include, but not be limited to the following: Employment, upgrading, demotion or transfer, recruitment or recruitment advertising, layoff or termination, rates of pay or other forms of compensation, and selection for training, including, without limitation, apprenticeship.

Copyright © 2013 All rights reserved.

IN WITNESS WHEREOF, Owner and Contractor have signed this Agreement.

This Agreement will be effective on April 19, 2023 (which is the Effective Date of the Contract).

OWNER:	CONTRACTOR:
_____	_____
(Authorized Signature)	*(Authorized Signature)*
By: Neal McIntyre	By: _____
(Printed Name)	*(Printed Name)*
Title: Mayor, City of Fernley	Title: _____
	(If Contractor is a corporation, a partnership, or a joint venture, attach evidence of authority to sign.)
Attest: _____	Attest: _____
Title: Kim Swanson, City Clerk, City of Fernley	Title: _____
Address for giving notices:	Address for giving notices:
City of Fernley, Engineering Department	_____
595 Silver Lace BLVD	_____
Fernley, NV 89408	_____
	License No.: _____ *(where applicable)*
(If Owner is a corporation, attach evidence of authority to sign. If Owner is a public body, attach evidence of authority to sign and resolution or other documents authorizing execution of this Agreement.)	*NOTE TO USER: Use in those states or other jurisdictions where applicable or required.*

Copyright © 2013 All rights reserved.

++END OF AGREEMENT BETWEEN OWNER AND CONTRACTOR ++

Copyright © 2013 All rights reserved.

LUMOS & ASSOCIATES

Carson City • Fallon • Lake Tahoe • Reno

www.LumosInc.com

Reno
9222 Prototype Drive
Reno, Nevada
775.827.6111

April 6, 2023

Jessica Dover, P.E., Sr. Project Manager
City of Fernley Public Works Department
595 Silver Lace Boulevard
Fernley, NV 89408

Subject: US 50/US 95A Sanitary Sewer Improvements
Recommendation of Award

Dear Jessica:

As you are aware, bids for the above-referenced project were received and opened on April 5, 2023. One (1) bid was received with Farr Construction dba Resource Development Co. having the lowest total bid of $341,220.00.

Resource Development Co., a Nevada contractor licensee, is of good standing and their bid was found to be complete. Therefore, we recommend that the award be considered to Resource Development Co. in the amount of $341,220.00.

A Bid Tabulation has been attached for your reference. If you have any questions, please contact me at (775) 827-6111.

Sincerely,

Brian Harer
Senior Project Manager
Construction Division

Attach: Bid Tabulation
Bid Opening Attendance Sheet
Bid Submittal Checklist

PROJECT: US 50/US 95A Sanitary Sewer Improvements **CITY OF FERNLEY - BID TABULATION**

PWP # LY-2023-271 **April 6, 2023**

Item No.	Base Bid Item and Description	Unit	Engineer's Estimate Unit Cost	Quantity	Total	** Apparent Low Bidder ** Resource Development Co. Unit Cost	Total
1	Mobilization, Demobilization, General Conditions, Traffic Control	LS	$67,000.00	1	$ 67,000.00	$30,300.00	$ 30,300.00
2	4" AWWA C153 Tee	EA	$2,500.00	1	$ 2,500.00	$12,000.00	$ 12,000.00
3	4" Plug Valve	EA	$2,500.00	2	$ 5,000.00	$11,250.00	$ 22,500.00
4	Sanitary Sewer Cleanout	EA	$2,500.00	1	$ 2,500.00	$9,800.00	$ 9,800.00
5	Install Owner Supplied Precast Polymer Conc. Manhole, Siphon Break, and Forcemain/Gravity Sewer Tie Ins	EA	$25,000.00	1	$ 25,000.00	$46,700.00	$ 46,700.00
6	Sanitary Sewer Manhole Rehab	EA	$12,500.00	5	$ 62,500.00	$23,400.00	$ 117,000.00
7	Bypass Pumping	LS	$125,000.00	1	$ 125,000.00	$71,900.00	$ 71,900.00
8	Contract Allowance (10%)	LS	$29,000.00	1	$ 29,000.00	$31,020.00	$ 31,020.00
	BASE BID TOTAL (SUM OF ITEMS 1 THRU 8):				$ 318,500.00		$ 341,220.00

Bid Form (00410):	X
Bid Bond (00430-1):	X
Bidder Subcontractor-5% List (00440-1):	X
Proposed Material Suppliers (00440-3):	X
Preferential Bidder Status (00450-1)	X
Affidavit of Certification (00450-2,3)	X
State Business or Contractor's License:	X
Addendum No. 1:	X
Addendum No. 2:	X
1% Sub List (00440-2):	X
SUBCONTRACTORS:	None

US50A/US95A Sanitary Sewer Improvements
(PWP-LY-2023-271)
Bid Opening Attendance Sheet
City of Fernley – Engineering Department
April 5, 2023
3:00 PM

Name	Company	Phone Number	Email Address
BRIAN HARER	LUMOS	775-827-6111	BHARER@LUMOSINC.com
J. Dover	COF	(775) 784-9919	jdover@cityoffernley.org
Hunter Mori	Lumos	775-225-9913	hmori@lumosinc.com
Vanessa Vazquez	RDC	702 526 2360	vvazquez@resourcedevelopmentco.com
Kari Weitzel	COF	775 784 9866	kweitzel@cityoffernley.org

City of Fernley
US50A/US95A Sanitary Sewer Improvements
PWP No. LY-2023-271
Bid Submittal Checklist
April 5, 2023
3:00 PM

Contractor	Bid Form (00410)	Bid Bond (00430)	5% List (00440-1)	Proposed Material Suppliers (00440-3)	Preferential Bidder Status (00450-1)	Affidavit of Certification (00450-2,3)	State Business or Contractor's License	Addendum No. 1	Addendum No. 2	1% List (00440-2)	Base Bid Total
Resource Development	✓	✓	✓	✓	✓	✓	✓	✓	✓	✓	$ $310,200.00
											$
											$
											$
											$
											$
											$
											$
											$

CITY OF FERNLEY

City Council
AGENDA REPORT

Meeting Date: April 19, 2023

REPORT TO:	Mayor and City Council
REPORT FROM:	**Kari Weitzel**

FINANCIAL IMPACT:		**CURRENTLY BUDGETED:**		**FUND/ACCOUNT:**
Yes:X	No:	Yes:X	No:	230-575-730

ACTION REQUESTED: Consent

AGENDA ITEM: (For Possible Action):

Possible action to approve a contract with CFA for engineering design services for the In Town Park Improvement Project in an amount not to exceed $119,840.

AGENDA ITEM BRIEF:

Staff is seeking approval to execute a contract for engineering design and construction services for In Town Park Improvement Project.

RECOMMENDED MOTION:

"I move to approve the contract with CFA in an amount not to exceed $119,840 for engineering design and construction services for In Town Park Improvement Project."

BUSINESS IMPACT (per NRS Chapter 237):

A Business Impact Statement is not required because this is not a rule (term excludes vehicles by which legislative powers are exercised under NRS Chapters 271, 278, 278A, or 278B).

See attached report for background, analysis, alternatives.

ALTERNATIVES:

N/A

BACKGROUND:

PROJECT SUMMARY:
The contract would allow the Engineering Department to utilize the services of CFA to do improvements at the In Town Park. CFA will be designing plans for the In Town Park which include:

- upgrade play area by diversifying equipment to serve a larger range of users.
- resurface tennis/pickleball court
- pave pathways and create loop walking trail
- upgrade the skate park to allow for multiple age users and level of experience
- identify opportunities for concessionaires to activate the park with desirable recreational activities
- provide lights for security
- enhance the visual appeal of amenities
- replace the softball field fence
- add gazebo and shade structures
- replace the concession stand
- add a park sign

Due to the large cost of the project, it will be completed in phases. The first phase will focus on repairs to the existing tennis courts, installation of an additional large gazebo, landscaping installation, and installation of an ADA-compliant walking path.

Staff is also working to secure grant funding for the project to help offset construction costs. Additional consultation with the Council will be brought forward as the design progresses to gather input and approval of the proposed improvements.

BACKGROUND:
In May 2017, a Parks Master Plan was adopted by the City Council. The In Town Park is identified in this plan to include the above improvements. Since 2017, NDOT has completed parking and sidewalk improvements along HWY 95A. The City of Fernley has also completed resurfacing of the basketball court, which is still in good condition.

For FY 2022/2023 a budget of $150,000 was approved for the In Town Park Improvement design.

RELEVANT LAWS, STATUTES, AND REGULATIONS:

NRS 625

FINANCIAL IMPLICATIONS:

Money is currently budgeted in the FY22/23 Residential Construction Tax budget to start the project.

ATTACHMENTS:
1. 2023.04.05 Professional Contract - CFA
2. Proposal-In Town Park- ATTACHMENT A

CONTRACT

A Contract For Design Professional Services

THIS CONTRACT is made and entered into this __5th___day of _ April ___, __2023__, by and between the CITY OF FERNLEY, a municipal corporation within the State of Nevada whose address is 595 Silver Lace Blvd, Fernley, Nevada 89408 (the "City"), and __CFA, INC_____, a __Consultant_____, whose address is _1150 Corporate Blvd. Reno, NV 89502_____ ("Contractor").

WHEREAS, Nevada Revised Statutes ("NRS") Chapter 266 authorizes the City to engage the services of independent contractors; and

WHEREAS, the services of Contractor are deemed to be both necessary and in the best interests of the City; and

WHEREAS, the City desires to retain the services of Contractor on the terms and conditions set forth in this Contract;

NOW, THEREFORE, in consideration of the aforesaid premises, the parties mutually agree as follows:

1. **CONTRACT TERM:** This Contract shall be effective from the day it is approved by the City Council (which date shall be inserted into the introductory paragraph of this Contract) and, subject to appropriation, shall remain in full force and effect until the services are completed unless terminated earlier pursuant to Section 6.

2. **CONTRACTOR'S SERVICES:**

    a. **Description of Services.**

        i. **Attachments:**

            1. **Attachment A:** Scope of Work with Fee Schedule. Contractor hereby agrees to provide the services set forth in the Scope of Work attached hereto as Attachment A and incorporated herein by this reference.

            2. **Attachment B:** N/A

            3. **Attachment C:** N/A

            4. **Attachment D:** N/A

    b. **Standard Of Care:** Notwithstanding anything to the contrary in this agreement or in any other contract document relating to the project, in

performing its work under this agreement Contractor shall perform its services to the standard of care of a reasonable professional that is performing the same or similar work, at the same time and locality and under the same or similar conditions faced by Contractor Cooperation with City. Contractor agrees that its officers, associates, employees and subcontractors will cooperate with the City in providing the services under this Contract and will be, with advance notice, available for consultation with the City at such reasonable times as to not conflict with the City's other responsibilities.

c. **Notice to Proceed.** Contractor shall not commence work until the Contract is fully executed by City and Contractor and a Notice to Proceed (NTP) has been issued to the Contractor by the City.

d. **Optional Services.** The City shall have the right to exercise its option(s) for all or any part of the OPTIONAL tasks or subtasks identified in Attachment B Fee Schedule, (and further described in Attachment A Scope of Services). The Contractor shall not commence work on any OPTIONAL task prior to issuance of a NTP for the OPTIONAL task by the City.

3. REQUIRED APPROVALCOMPENSATION AND TERMS OF PAYMENT:

a. **Compensation.** The City agrees to pay Contractor for the services set forth in the Scope of Work either a lump sum fee or an hourly fee based on the Fee Schedule attached hereto as Attachment A and incorporated herein by this reference.

b. **Reimbursable Expenses.** Contractor agrees that all of its direct and indirect expenses are included in the lump sum or hourly fee set forth in the Fee Schedule, unless the Fee Schedule specifically provides otherwise.

c. **Payment Invoicing.** Contractor shall submit an invoice for payment for the services provided by Contractor based on the manner or method of payment set forth in Attachment A (Scope of Work and Fee Schedule).

d. **Timeliness of Billing.** Contractor acknowledges and agrees that timeliness of billing is of the essence to this Contract and recognizes that the City is on a fiscal year ending on June 30. All invoices for services rendered prior to July 1 must be submitted to the City no later than 30 days after the end of the fiscal year

e. **Not to Exceed.** The maximum amount payable to Contractor to complete each task is equal to the not-to-exceed amounts identified in Attachment B. Contractor may submit a written request to the City's Project Manager to reallocate not-to-exceed amounts between Tasks. The request to

reallocate must be accompanied by a revised fee schedule with associated revised not-to-exceed amounts and must be approved in writing by the City's Project Manager prior to performance of the work. Contractor shall not be compensated in excess of the Total not-to-exceed Contract amount:

Subtotal Professional Services: (Tasks 1.0 to 9.0)	$ 86,615
Subtotal OPTIONAL Professional Services: (Task X.X)	$ 0
Total NTE Amount (Including OPTIONAL Services)	$ 86,615

f. **NOTICE:** All notices or other communications required or permitted to be given hereunder shall be deemed delivered: (i) when written notice is received by the party to whom it is directed, if delivered personally, or by email; or (ii) three (3) days after deposit with the United States Post Office, if mailed by certified mail, return receipt requested, postage prepaid and addressed to the party to be notified. Notices shall be addressed as follows:

If to the City:
City Engineer Department
City of Fernley
595 Silverlace Blvd.
Fernley, NV 89408

If to Contractor:
Contractor
Address
City State

4. INSPECTION & AUDIT:

a. **Books and Records**. Contractor agrees to keep and maintain under general accepted accounting principles (GAAP) full, true and complete records, contracts, books, and documents as are necessary to fully disclose to the City, the State of Nevada or the United States Government, or their authorized representatives, upon audits or reviews, sufficient information to determine compliance with all state and federal regulations and statutes.

b. **Inspection & Audit**. Contractor agrees that the relevant books, records (written, electronic, computer related or otherwise), including, without limitation, relevant accounting procedures and practices of Contractor or its subcontractors, financial statements and supporting documentation, and documentation related to the performance of this Contract shall be subject, at any reasonable time, to inspection, examination, review, audit, and copying at any office or location of Contractor where such records may be found, with or without notice by the City, and with regard to any federal

funding, the relevant federal agency, the Comptroller General, the General Accounting Office, the Office of the Inspector General, or any of their authorized representatives. All subcontracts shall reflect the requirements of this paragraph.

c. **Period of Retention**. All books, records, reports, and statements relevant to this Contract must be retained a minimum three years and for five years if any federal funds are used under this Contract. The retention period runs from the date of payment for the relevant services by the City, or from the date of termination of this Contract, whichever is later. Retention time shall be extended when an audit is scheduled or in progress for a period reasonably necessary to complete an audit and/or to complete any administrative and judicial litigation which may ensue.

5. TERMINATION OR SUSPENSION:

a. **Suspension**. The City may suspend, without cause, the performance by Contract under this Contract for such period of time as the City, in its sole discretion, may prescribe by providing written notice to Contractor. The suspension shall be effective as of the date set forth in the written notice. With such suspension, the City agrees to pay Contractor the amount of compensation earned as of the effective date of the suspension.

b. **Termination Without Cause**. The City reserves the right to terminate this Contract without cause or default on the part of Contractor with ten (10) days' prior written notice to Contractor. In the event of termination, without cause or default, the City agrees to pay Contractor for the services performed before the date that notice of termination is received by Contractor.

c. **Termination for Non-Appropriation**. Contractor acknowledges that the City is a governmental entity and the Contract's validity is based upon the availability of public funding under its authority. The City reserves the right to reduce estimated or actual quantities, in whatever amount necessary, without prejudice or liability to the City, if funding is not available or if legal restrictions are placed upon the expenditure of monies for the services required under this Contract. In addition, without prejudice or liability to the City, if funding is not appropriated or otherwise made available to support the continuation of this Contract in any fiscal year succeeding the first fiscal year, this Contract will be deemed to have been terminated automatically when appropriated funds expire and are not available.

d. **Default or Breach.** A default or breach (an "Event of Default") may be declared with or without termination. Each of the following shall constitute an Event of Default:

   i. If Contractor fails, in the judgment of the City, to provide or satisfactorily perform any of the conditions, work, deliverables, goods, or services called for by this Contract, and such failure continues for more than fifteen (15) days after written notice is delivered to Contractor provided that if the nature of such breach is such that although curable, the breach cannot reasonably be cured within a fifteen (15) day period, an Event of Default shall not exist if Contractor shall commence to cure such breach and thereafter rectifies and cures such breach with due diligence, but in no event later than sixty (60) days after the written notice;

   ii. If any state, county, city or federal license, authorization, waiver, permit, qualification or certification required by statute, ordinance, law, or regulation to be held by Contractor to provide the goods or services required by this Contract is for any reason denied, revoked, debarred, excluded, terminated, suspended, lapsed, or not renewed; or

   iii. If Contractor: (i) becomes insolvent, subject to receivership, or voluntarily or involuntarily subject to the jurisdiction of the bankruptcy court; (ii) makes a general assignment for the benefit of creditors; (iii) admits in writing to the inability to pay its debts as they become due; or (iv) takes any action for the purpose of effecting any of the foregoing.

e. **For Cause Termination and Time to Correct. For Cause Termination and Time to Correct**. This Contract may be terminated by the non-defaulting party upon a declared default or breach only after service of formal written notice as specified in paragraph (4), and the subsequent failure of the defaulting party within a reasonable time of receipt of that notice to provide evidence, satisfactory to the non-defaulting party, showing that the declared default or breach has been corrected or is being corrected as expeditiously as is prudent and practicable.

f. **Winding Up Affairs upon Termination.** In the event that this Contract is terminated for any reason, the parties agree that the provisions of this paragraph survive termination:

   i. The parties shall account for and properly present to each other all claims for fees and expenses and pay those which are undisputed and otherwise not subject to set off under this Contract. Neither party

may withhold performance of winding up provisions solely based on nonpayment of fees or expenses accrued up to the time of termination.

ii. Contractor shall satisfactorily complete work in progress at the agreed rate (or a pro rata basis if necessary) if requested by the City.

iii. Contractor shall execute any documents and take any actions necessary to effectuate an assignment of this Contract if requested by the City; and

iv. Contractor shall preserve, protect, and promptly deliver possession to the City of all proprietary information in accordance with Section 18.

v. In the event that dispute(s) arise during the winding up of affairs upon termination, the parties agree to meet and negotiate in good faith to resolve any such disputes(s).

6. **REMEDIES:** Except as otherwise provided for by law or this Contract, the rights and remedies of the parties shall not be exclusive and are in addition to any other rights and remedies provided by law or equity, including, without limitation, actual damages exclusive of lost profits.

7. **ATTORNEYS' FEES, COSTS, AND EXPENSES:** Unless otherwise stated herein, the parties will bear their own attorneys' fees, costs, and expenses in connection with the negotiation, execution, and performance of this Contract.

8. **LIMITED LIABILITY:** Contract liability of both parties shall not be subject to punitive damages. Liquidated damages shall not apply unless otherwise specified in the Attachments. Damages for any default or breach by the City shall never exceed the amount of funds appropriated for payment under this Contract, but not yet paid to Contractor, for the fiscal year budget in existence at the time of the default or breach.

9. **FORCE MAJEURE:** Neither party shall be deemed to be in violation of this Contract if it is prevented from performing any of its obligations hereunder due to strikes, failure of public transportation, civil or military authority, act of public enemy, accidents, fires, explosions, or acts of God, including, without limitation, earthquakes, floods, winds, or storms. In such an event the intervening cause must not be through the fault of the party asserting such an excuse, and the excused party is obligated to promptly perform in accordance with the terms of this Contract after the intervening cause ceases.

10. **INDEMNIFICATION:** The City does not require the Contractor to defend, indemnify or hold harmless the public body or the employees, officers or agents of that public

body from any liability, damage, loss, claim, action or proceeding caused by the negligence, errors, omissions, recklessness or intentional misconduct of the employees, officers or agents of the public body.

a. The City does require the Contractor to indemnify and hold harmless the public body, and the employees, officers and agents of the public body from any liabilities, damages, losses, claims, actions or proceedings, including, without limitation, reasonable attorneys' fees and costs, to the extent that such liabilities, damages, losses, claims, actions or proceedings are caused by the negligence, errors, omissions, recklessness or intentional misconduct of the Contractor or the employees or agents of the Contractor in the performance of the contract.

b. The City does not require the Contractor to defend the public body and the employees, officers and agents of the public body with respect to the liabilities, damages, losses, claims, actions or proceedings caused by the negligence, errors, omissions, recklessness or intentional misconduct of the Contractor or the employees or agents of the Contractor which are based upon or arising out of the professional services of the Contractor. If the Contractor is adjudicated to be liable by a trier of fact, the trier of fact shall award reasonable attorney's fees and costs to be paid to the public body, as reimbursement for the attorney's fees and costs incurred by the public body in defending the action, by the Contractor in an amount which is proportionate to the liability of the Contractor.

c. The City does require the Contractor to defend the public body and the employees, officers and agents of the public body with respect to the liabilities, damages, losses, claims, actions or proceedings caused by the negligence, errors, omissions, recklessness or intentional misconduct of the Contractor or the employees or agents of the Contractor which are not based upon or arising out of the professional services of the Contractor.

11. <u>INDEPENDENT CONTRACTOR</u>: Contractor is associated with the City only for the purposes and to the extent specified in this Contract, and in respect to performance of the contracted services pursuant to this Contract, Contractor is and shall be an independent contractor and, subject only to the terms of this Contract, shall have the sole right to supervise, manage, operate, control, and direct performance of the details incident to its duties under this Contract. Nothing contained in this Contract shall be deemed or construed to create a partnership or joint venture, to create relationships of an employer-employee or principal-agent, or to otherwise create any liability for the City whatsoever with respect to the indebtedness, liabilities, and obligations of Contractor or any other party. Contractor shall be solely responsible for, and the City shall have no obligation with respect to: (1) withholding of income taxes, FICA or any other taxes or fees; (2) industrial insurance coverage; (3) participation in any group

insurance plans available to employees of the City; (4) participation or contributions by either Contractor or the Public Employees Retirement System; (5) accumulation of vacation leave or sick leave; or (6) unemployment compensation coverage provided by the City. Contractor shall indemnify and hold the City harmless from, and defend the City against, any and all losses, damages, claims, costs, penalties, liabilities, and expenses arising or incurred because of, incident to, or otherwise with respect to any such taxes or fees. Neither Contractor nor its employees, agents, or representatives shall be considered employees, agents, or representatives of the City.

12. INSURANCE: Unless expressly waived in writing by the City, Contractor shall, at Contractor's sole expense, procure, maintain and keep in force during the entire term of this Contract those policies of insurance which have been agreed to by the parties as evidenced by the parties initials in the signature spaces provided below. The City shall have no liability except as specifically provided in this Contract. Contractor shall not commence work before Contractor has provided the required evidence of insurance to the City. Any insurance or self-insurance available to the City shall be in excess of, and non-contributing with, any insurance required from Contractor. Contractor's insurance policies shall apply on a primary basis. Until such time as the insurance is no longer required by the City, Contractor shall provide the City with renewal or replacement evidence of insurance no less than thirty (30) days before the expiration or replacement of the required insurance. If at any time during the period when insurance is required by this Contract, an insurer or surety shall fail to comply with the requirements of this Contract, as soon as Contractor has knowledge of any such failure, Contractor shall immediately notify the City and immediately replace such insurance or bond with an insurer meeting the requirements.

COF	CTR

a. **Workers' Compensation and Employer's Liability Insurance**. Industrial insurance protecting Contractor and the City from potential employee claims based upon job-related sickness, injury, or accident, during the performance of this Contract. Contractor shall provide a work certificate issued by a qualified insurer in accordance with NRS 616B.627. Prior to commencing any work, Contractor shall complete and provide the following written request to a qualified insurer: ****CONTACTOR NAME has entered into a contract with Owner to perform work from THE ___ DAY OF _____, 20__ to THE ___ DAY OF _____, 20__ and requests that an industrial insurance provider qualified and licensed to offer such insurance within the State of Nevada, provide to The City of Fernley, Nevada 1) a certificate of coverage issued pursuant to NRS 616B.627 and 2) notice of any lapse in coverage or nonpayment of coverage that Contractor is required to maintain. The certificate and notice should be mailed to:

City of Fernley

595 Silver Lace Blvd

Fernley, NV 89408

i. Contractor may, in lieu of furnishing a certificate of an insurer, provide an affidavit indicating that Contractor is a sole proprietor and that:

1. In accordance with the provisions of NRS 616B.659, Contractor has not elected to be included within the terms, conditions, and provisions of NRS chapters 616A to 616D, inclusive; and

2. Contractor is otherwise in compliance with those terms, conditions and provisions.

COF CTR

b. **Professional Liability Insurance**. Minimum Coverage Limit required (not deductible amount): $1,000,000 Each Claim, $2,000,000 Aggregate.

i. Retroactive date: Prior to commencement of the performance of this Contract

ii. Discovery period: Three (3) years after the termination date of this Contract.

c. **General Requirements**.

i. Additional Insured: By endorsement to the general liability insurance policy evidenced by Contractor, ***the City of Fernley, its officers, employees, and immune contractors*** shall be named as additional insureds for all liability arising from this Contract.

ii. Waiver of Subrogation: Each insurance policy shall provide for a waiver of subrogation in favor of the City.

iii. Cross-Liability: All required liability policies shall provide cross-liability coverage as would be achieve under the standard ISO separation of insureds clause.

iv. Deductibles and Self-Insured Retentions: Insurance maintained by Contractor shall apply on a first dollar basis without application of a deductible or self-insured retention unless otherwise specifically agreed to by the City. Such approval shall not relieve Contractor from the obligation to pay any deductible or self-insured retention. Any deductible or self-insured retention shall not exceed $5,000 per occurrence, unless otherwise approved by the City.

v. Policy Cancellation: Except for ten days' notice for non-payment of premium, each insurance policy shall be endorsed to state that; without thirty (30) days prior written notice to the City, the policy shall not be canceled, non-renewed or coverage and/or limits reduced or materially altered, and shall provide that notices required by this paragraph shall be sent by certified mail to the address shown below.

vi. Approved Insurer: Each insurance policy shall be issued by insurance companies: (a) authorized to do business in the State of Nevada or eligible surplus lines insurers acceptable to the City and having agents in the State of Nevada upon whom service of process may be made; and (b) currently rated by A.M. Best as "A-VII" or better.

d. **Evidence of Insurance.** Prior to the start of any work, Contractor must provide the following documents to the City:

i. Certificate of Insurance: The Acord 25 Certificate of Insurance form or a form substantially similar must be submitted to the City to evidence the insurance policies and coverages required of Contractor.

ii. Additional Insured Endorsement: An Additional Insured Endorsement (CG20 10 or C20 26), signed by an authorized insurance company representative, **must** be submitted to the City to evidence the endorsement of the City as an additional insured per General Requirements, Subsection 1) above.

iii. Schedule of Underlying Insurance Policies: If an Umbrella or Excess insurance policy is evidenced to comply with minimum limits, a copy of the underlying schedule from the Umbrella or Excess insurance policy may be required.

iv. Review and Approval: Documents specified above must be submitted for review and approval by the City prior to the commencement of work by Contractor. Neither approval by the City nor failure to disapprove the insurance furnished by Contractor shall relieve Contractor of Contractor's full responsibility to provide the insurance required by this Contract. Compliance with the insurance requirements of this Contract shall not limit the liability of Contractor or its sub-contractors, employees or agents to the City or others, and shall be in addition to and not in lieu of any other remedy available to the City under this Contract or otherwise. The City reserves the right to request and review a copy of any required insurance policy or endorsement to assure compliance with these requirements. Contractor will mail all required insurance documents to the City at the address identified in section 4 of this Contract.

e. **Failure to Maintain Required Coverages.** If Contractor fails to carry the required insurance, the City may: (i) order Contractor to stop further performance of the Contract, and declare contractor in breach, terminate the Contract if such breach is not remedied; or (ii) purchase replacement insurance and withhold the costs or premium payments made from the payments due to Contractor or charge the replacement insurance costs back to Contractor.

13. **COMPLIANCE WITH LEGAL OBLIGATIONS:** Contractor shall procure and maintain for the duration of this Contract any state, county, city or federal license, authorization, waiver, permit, qualification or certification required by statute, ordinance, law, or regulation to be held by Contractor to provide the goods or services required by this Contract. Contractor will be responsible to pay all taxes, assessments, fees, premiums, permits, and licenses required by law. Real property and personal property taxes are the responsibility of Contractor in accordance with NRS 361.157 and 361.159. Contractor agrees to be responsible for payment of any such government obligations not paid by its subcontractors during performance of this Contract.

14. **WAIVER OF BREACH:** Failure to declare a breach or the actual waiver of any particular breach of this Contract or its material or nonmaterial terms by either party shall not operate as a waiver by such party of any of its rights or remedies as to any other default or breach.

15. **SEVERABILITY:** If any portion, provision, or part of this Contract is held, determined, or adjudicated by any court of competent jurisdiction to be invalid, unenforceable, or void for any reason whatsoever, each such portion, provision, or part shall be severed from the remaining portions, provisions, or parts of this Contract, and such determination or adjudication shall not affect the validity or enforceability of such remaining portions, provisions, or parts.

16. **ASSIGNMENT/DELEGATION:** To the extent that any assignment of any right under this Contract changes the duty of either party, increases the burden or risk involved, impairs the chances of obtaining the performance of this Contract, attempts to operate as a novation, or includes a waiver or abrogation of any defense to payment by the City, such offending portion of the assignment shall be void, and shall be a breach of this Contract. Contractor shall neither assign, transfer nor delegate any rights, obligations, or duties under this Contract without the prior written consent of the City.

17. **PROPRIETARY INFORMATION:** Any reports, histories, studies, tests, manuals, instructions, photographs, negatives, blue prints, plans, maps, data, system designs, computer code (which is intended to be consideration under this Contract), or any other documents or drawings, prepared or in the course of preparation by Contractor (or its subcontractors) in performance of its obligations under this Contract shall be the exclusive property of the City and all such materials shall be delivered into the possession of the City by Contractor upon completion, termination, or cancellation of

this Contract. Contractor shall not use, willingly allow, or cause to have such materials used for any purpose other than performance of Contractor's obligations under this Contract without the prior written consent of the City. Notwithstanding the foregoing, the City shall have no proprietary interest in any materials licensed for use by the City that are subject to patent, trademark, or copyright protection.

18. PUBLIC RECORDS: Pursuant to NRS 239.010, information or documents received from Contractor may be open to public inspection and copying. The City will have the duty to disclose unless a particular record is made confidential by law or a common law balancing of interests. Contractor may label specific parts of an individual document as a "trade secret" or "confidential," provided that Contractor thereby agrees to indemnify and defend the City for honoring such a designation. The failure to so label any document that is released by the City shall constitute a complete waiver of any and all claims for damages caused by any release of the records.

19. FEDERAL FUNDING: In the event federal funds are used for payment of all or part of this Contract:

a. Contractor certifies, by signing this Contract, that neither it nor its principals are presently debarred, suspended, proposed for debarment, declared ineligible, or voluntarily excluded from participation in this transaction by any federal department or agency. This certification is made pursuant to the regulations implementing Executive Order 12549, Debarment and Suspension, 28 C.F.R. pt. 67, § 67.510, as published as pt. VII of the May 26, 1988, Federal Register (pp. 19160-19211), and any relevant program-specific regulations. This provision shall be required of every subcontractor receiving any payment in whole or in part from federal funds.

b. Contractor and its subcontractors shall comply with all terms, conditions, and requirements of the Americans with Disabilities Act of 1990 (P.L. 101-136), 42 U.S.C. 12101, as amended, and regulations adopted thereunder contained in 28 C.F.R. 26.101-36.999, inclusive, and any relevant program-specific regulations.

c. Contractor and its subcontractors shall comply with the requirements of the Civil Rights Act of 1964, as amended, the Rehabilitation Act of 1973, P.L. 93-112, as amended, and any relevant program-specific regulations, and shall not discriminate against any employee or offeror for employment because of race, national origin, creed, color, sex, religion, age, disability or handicap condition (including AIDS and AIDS-related conditions.)

20. LOBBYING: The parties agree, whether expressly prohibited by federal, state or local law, or otherwise, that no funding associated with this Contract will be used for any purpose associated with or related to lobbying or influencing or attempting to lobby or influence any of the following: (a) any federal, state, county or local agency,

legislature, commission, council or board; (b) any federal, state, county or local legislator, commission member, council member, board member, or other elected official; or (c) any officer or employee of any federal, state, county or local agency; legislature, commission, council or board.

21. **CERTIFICATION REQUIRED BY NEVADA SENATE BILL 26 (2017):** By signing this Agreement, the CONSULTANT provides a written certification, as a material part of this Agreement, that the CONSULTANT is not currently engaged in, and during the Term shall not engage in, a boycott of Israel. The term "boycott of Israel" has the meaning ascribed to that term in Section 3 of Nevada Senate Bill 26 (2017). The CONSULTANT shall be responsible for fines, penalties, and repayment of any State of Nevada or federal funds that may arise (including those that the CITY pays, becomes liable to pay, or becomes liable to repay) as a direct result of the CONSULTANT's non-compliance with this Section. If, at any time during the formation or duration of this Agreement, CONSUTLANT is engaged or engages in a boycott of Israel, it will constitute a material breach of this Agreement.

22. **PROPER AUTHORITY:** Contractor represents and warrants Contractor has full power and authority to enter into this Contract. Any services performed by Contractor before this Contract is effective or after it ceases to be effective are performed at the sole risk of Contractor.

23. **GOVERNING LAW; VENUE:** This Contract will be interpreted, and the rights and liabilities of the parties determined, in accordance with the laws of the State of Nevada, excluding its conflict of laws rules. In any action or proceeding arising under this Contract, each party (a) consents to the jurisdiction of Nevada Courts, and of the pertinent appellate courts, and consents to the venue of such action or proceeding in Lyon County, Nevada courts, (b) irrevocably agrees that all actions or proceedings arising out of or relating to this Contract shall be litigated in such courts, and (c) consents to personal jurisdiction within Lyon County, Nevada. Each party accepts for itself, generally and unconditionally, the exclusive jurisdiction and venue of the aforesaid courts and waives any defense of lack of personal jurisdiction, improper venue, inconvenient forum or any similar defense, and irrevocably agrees to be bound by any non-appealable judgment rendered thereby in connection with this Contract.

24. **INTEGRATED CONTRACT:** This Contract (including any addenda, exhibits, or attachments incorporated into and made a part of this contract) constitutes the entire agreement and understanding among the parties regarding the matters set forth herein and supersedes all previous negotiations, discussions, and understandings regarding such matters. The parties acknowledge and represent that they have not relied on any promise, inducement, representation, or other statement made in connection with this Contract that is not expressly contained herein. The terms of this Contract are contractual and not a mere recital.

25. **COUNTERPARTS:** This Contract may be executed in multiple counterparts, each of which shall be deemed an original, and all of such counterparts together shall constitute one and the same instrument.

26. **ADVICE OF COUNSEL:** Each party hereto represents and agrees that it has had the opportunity to seek and has sought from attorneys any such advice as it deems appropriate with respect to signing this Contract or the meaning of it. Each party has undertaken such independent investigation and evaluation as it deems appropriate and is entering into this Contract in reliance on that and not in reliance on any advice, disclosure, representation or information provided by or expected from any other party or such party's attorneys. This is an agreement of settlement and compromise, made in recognition that the parties may have different, disputed or incorrect understandings, information and contentions, as to facts and law, and with each party compromising and settling any potential correctness or incorrectness of its understandings, information and contentions as to the facts, law, claims, duties, disclosures and conduct occurring before or during the entry into this Contract. No conduct, failure, misunderstanding or misinformation and no claim of fraud or fraudulent inducement occurring prior to or in connection with the execution hereof shall be a ground for rescission hereof or for recovery of damages, except as otherwise expressly provided herein.

27. **MODIFICATION; NO WAIVER:** The provisions of this Contract, including this paragraph, may be modified or waived only in writing signed by both parties. No waiver with respect to any portion of this Contract shall apply to any other portion of the Contract, and a waiver on one occasion shall not be deemed to be a waiver of the same or any other breach on a future occasion. No course of dealing by any party, and no failure, omission, delay, or forbearance by any party in exercising such party's rights or remedies shall be deemed a waiver of any such rights or remedies or a modification of this Contract.

28. **INTERPRETATION OF AGREEMENT:** This Contract shall be construed without regard to the party or parties responsible for its preparation and shall be deemed to have been prepared collectively by the parties. Any ambiguity or uncertainty arising herein shall not be interpreted or construed against any party hereto on the basis that a party prepared or drafted a particular provision of this Contract.

29. **COOPERATION OF PARTIES:** The parties agree to cooperate to accomplish the purpose of this Contract and to execute any and all supplementary documents and to take all additional actions not inconsistent with the terms set forth in this Contract that are necessary and appropriate to give full force and effect to the terms and intent of this Contract.

30. **NON-DISCRIMINATION:** In connection with the performance of work under this Contract, Contractor agrees not to discriminate against any employee or applicant for employment because of race, creed, color, national origin, sex, sexual orientation,

gender identity or expression, or age, including, without limitation, with regard to employment, upgrading, demotion or transfer, recruitment or recruitment advertising, layoff or termination, rates of pay or other forms of compensation, and selection for training, including, without limitation, apprenticeship. Contractor further agrees to insert this provision in all subcontracts hereunder, except subcontracts for standard commercial supplies or raw materials.

REMAINDER OF PAGE INTENTIONALLY LEFT BLANK

In witness whereof, the parties hereto have caused this Contract to be signed and intend to be legally bound thereby:

CITY OF FERNLEY

_____
Mayor, City of Fernley Date

_____
City Clerk, City of Fernley Date

Approved as to form:

_____
City Attorney, City of Fernley Date

Originating Department:

_____
Department Head Date

CONTRACT

A Contract For Design Professional Services

CONTRACTOR, being first duly sworn, deposes and says: That CONTRACTOR. is the Contractor**;** that NAME OF PERSON REPRESENTING CONTRACTOR has read the foregoing Contract; and that he understands the terms, conditions, and requirements thereof.

CONTRACTOR
BY:
TITLE:
FIRM:
BUSINESS LICENSE #:
Address:
City: State: Zip Code:
Telephone: Fax #:
E-mail Address:

_____
(Signature of Contractor)

DATED this _____ day of _____, 20__.

STATE OF _____)
) ss
County of _____ _____)

On this _____ day of , in the year 20__, before me, _____ / Notary Public, personally appeared , personally known to me or proved to me on the basis of satisfactory evidence to be the person whose name is subscribed to this instrument, and acknowledged that he executed it.

WITNESS my hand and official seal.

_____
Notary's Signature

My Commission Expires: _____

LAND SURVEYORS
CIVIL ENGINEERS
LAND USE PLANNERS

March 10, 2023
Amended March 28, 2023

via e-mail: kweitzel@cityoffernley.org

Kari Weitzel
Administrative Specialist III
595 Silver Lace Blvd.
Sparks, NV 89431

RE: PROPOSAL FOR SURVEYING, CIVIL ENGINEERING, AND LANDSCAPE SERVICES
IN TOWN PARK, 4.09 ± AC, 100 HWY 95A, FERNLEY, NEVADA

Dear Kari,

Thank you for contacting CFA about this project. We have prepared this proposal based on our site visit with you and our experience on similar projects. Proposed improvements include increased pedestrian connectivity, various new shade facilities, new fencing and other items as discussed during the site visit. Based on our conversations it is understood that the goal is to complete design drawings for the first phase of development by June 30, 2023. The scope of work is presented below with the intent of completing the overall project in two (2) phases. If project funding conditions change and/or additional project phasing is required, this proposal will be amended to reflect so. The following outlines our scope of services and associated fees to perform this work.

CFA's Scope of Services for this project is as follows:

SURVEYING

CFA will perform a boundary and control survey to establish fixed horizontal and vertical control referenced to the georeferenced datums, such as the Nevada State Plane Coordinate System (NV SPCS) and North American Vertical Datum of 1988 (NAVD88), or local control networks if required. We will require an updated Title Report for the park parcel prior to completion of the boundary & topographic survey. CFA will perform the following surveying services for the City of Fernley In-Town Park Improvement project:

TASK SM1 – BOUNDARY & TOPOGRAPHIC SURVEY AND MAPPING

CFA will provide a field survey to locate parcel, centerline and NDOT monuments to determine the park boundary. The results of the field survey will be analyzed, and the park boundary lines will be determined by a Nevada Licensed Professional Land Surveyor and added to the topographic survey base map. The base map will include easements shown on the record mapping and as provided in the client supplied title report.

CFA anticipates using GPS along with conventional surveying methods to perform a topographic survey to

map the planimetric and topographic features of the park site. The topographic survey will include measurements on existing roadway improvements from pavement centerline to back of sidewalk, fence lines, park improvements, building and playground structures, surface utilities, vegetation, and changes in ground elevations.

Construction Documents & Permit Submittal

PART 1 – PRELIMINARY DESIGN CONCEPT

TASK C1A – SITE AND DEMOLITION PLANS

CFA will prepare linework for the proposed park improvements and have budgeted for two rounds of client revisions. A 30% review of the park improvements by the City of Fernley has been accounted for to determine preliminary budget and phasing limits. A geometric site plan will be developed based on prior discussion, site visit, and the survey base map prepared by CFA (above). The civil demolition plan will show existing improvements to remain, or to be removed. The site plan will identify proposed civil improvements, references to job specific details, and site work dimensions necessary for construction, including boundary, easements, and structure setbacks (if required). For the purposes of this proposal, it is assumed that major water and sewer improvements will not be required. We have assumed that all adjacent public storm drain has adequate capacity for the development of this park; therefore, design of off-site storm drain utilities is not included in this proposal.

TASK C1B – MEETINGS, APPLICATIONS, AND COORDINATION (T&M)

CFA will meet, correspond, and coordinate with public agencies, other consultants, and the City of Fernley to ensure compatibility between civil plans and other disciplines. Research and coordinate suppliers, specifications, and available pricing for proposed shade structures, as necessary. CFA will attend, as available, city council meetings or any other design review meetings, as requested by the City of Fernley.

PART 2 – PHASE ONE PLANS

C2.1 – Schematic Design (SD)

TASK C2.1A – SITE AND DEMOLITION PLANS (SD)

CFA will prepare linework for the phase one proposed park improvements and have budgeted for two rounds of client revisions. A 60% review of the plans by the City of Fernley has been accounted for to update the budget and confirm phasing limits from the design concept phase. A geometric site plan will be developed based on prior discussion and comments from the design concept phase. The civil site and demolition plans will show existing improvements to remain, or to be removed, proposed civil improvements, references to job specific details, and site work dimensions necessary for construction, including boundary, easements, and structure setbacks (if required). For the purposes of this proposal, it is assumed that major water and sewer improvements will not be required. Electric and site lighting will be shown schematically based on designs by others, when applicable

.

TASK C2.1B – SITE GRADING AND DRAINAGE PLAN (SD)

CFA will prepare a 60% grading and drainage plan for the proposed park and adjacent flatwork to include finish grade contours and spot elevations. Earthwork quantity estimates will not be provided. If required, structural retaining wall calculations, wall details, and footing details shall be provided by others (e.g., structural engineer or geotechnical engineer), when applicable. These items have been specifically excluded from this portion of the proposal. Storm drain facilities are known to exist on site in the form of infiltration trenches and chambers. Based on best available knowledge of the systems, CFA will confirm capacities of existing infrastructure and identify improvements as necessary relative to the increased amount of impervious surface proposed for the site. We have assumed that all adjacent off-site public storm drain has adequate capacity for the proposed additions of this park; therefore, design of off-site storm drain utilities is not included in this proposal.

C2.2 - Design Development (DD)

TASK C2.2A – SITE AND DEMOLITION PLANS (DD)

CFA will prepare linework for the proposed phase one park improvements and have budgeted for one round of client revisions. A 90% review of the plans by the City of Fernley has been accounted for to update the budget and confirm phasing limits from the SD phase. A geometric site plan will be developed based on prior discussion and comments from the SD phase. The civil site and demolition plans will show existing improvements to remain, or to be removed, proposed civil improvements, references to job specific details, and site work dimensions necessary for construction, including boundary, easements, and structure setbacks (if required). For the purposes of this proposal, it is assumed that major water and sewer improvements will not be required. Electric and site lighting will be shown schematically based on designs by others. Light pole base design and structural calculations shall be provided by others (e.g., structural engineer or geotechnical engineer), when applicable. This item has been specifically excluded from this portion of the proposal.

TASK C2.2B – SITE GRADING AND DRAINAGE PLAN (DD)

CFA will prepare a 90% grading and drainage plan for phase one of the proposed park and adjacent flatwork to include finish grade contours and spot elevations. Earthwork quantity estimates will not be provided. If required, structural retaining wall calculations, wall details, and footing details shall be provided by others (e.g., structural engineer or geotechnical engineer), when applicable. These items have been specifically excluded from this portion of the proposal. Storm drain facilities are known to exist on site in the form of infiltration trenches and chambers. Based on best available knowledge of the systems, CFA will confirm capacities of existing infrastructure and identify improvements as necessary relative to the increased amount of impervious surface proposed for the site. We have assumed that all adjacent off-site public storm drain has adequate capacity for the proposed additions of this park; therefore, design of off-site storm drain utilities is not included in this proposal.

C2.3 – Construction Documents (CD)

Task C2.3A – Site and Demolition Plans (CD)

CFA will finalize linework for the proposed phase one park. A final review of the phase one plans by the City of Fernley has been accounted for to update the budget and confirm phasing limits from the DD phase. A

geometric site plan will be developed based on prior discussion and comments from the DD phase. The civil site and demolition plans will show existing improvements to remain, or to be removed, proposed civil improvements, references to job specific details, and site work dimensions necessary for construction, including boundary, easements, and structure setbacks (if required). For the purposes of this proposal, it is assumed that major water and sewer improvements will not be required. Electric and site lighting will be shown schematically based on designs by others. Light pole base design and structural calculations shall be provided by others (e.g., structural engineer or geotechnical engineer), when applicable. This item has been specifically excluded from this portion of the proposal.

Task C2.3B – Site Grading and Drainage Plan (CD)

CFA will finalize the grading and drainage plan for phase one of the proposed park and adjacent flatwork to include finish grade contours and spot elevations. Earthwork quantity estimates will not be provided. If required, structural retaining wall calculations, wall details, and footing details shall be provided by others (e.g., structural engineer or geotechnical engineer), when applicable. These items have been specifically excluded from this portion of the proposal. Storm drain facilities are known to exist on site in the form of infiltration trenches and chambers. Based on best available knowledge of the systems, CFA will confirm capacities of existing infrastructure and identify improvements as necessary relative to the increased amount of impervious surface proposed for the site. We have assumed that all adjacent off-site public storm drain has adequate capacity for the proposed additions of this park; therefore, design of off-site storm drain utilities is not included in this proposal.

TASK C2.4 – DETAILS, SPECIFICATIONS, AND QUANTITIES

CFA will prepare site specific construction details for the civil improvements. Details and specifications will be shown on the plans and/or referenced to the Standard Specifications for Public Works Construction, as required by the reviewing agencies. CFA will develop project specific specifications to outline the construction methods and materials. A quantity estimate will be developed to provide an idea of project phasing.

TASK C2.5 – MEETINGS, APPLICATIONS, AND COORDINATION (T&M)

CFA will meet, correspond, and coordinate with public agencies, other consultants, and the City of Fernley to ensure compatibility between civil plans and other disciplines. Research and coordinate suppliers, specifications, and available pricing for proposed shade structures, as necessary. We will also prepare commercial service applications and provide base map information to utility purveyors as needed. CFA will coordinate utility services and assist the client in obtaining necessary “Will Serve” letters from the City of Fernley, as required. Since the project area will be larger than one acre, we will prepare a Dust Control Permit and a NDEP Notice of Intent (NOI) application as requested by the contractor. Storm Water Pollution Prevention Plan (SWPPP) to be completed by the Contractor. CFA will provide signed copies of any applications required by the City of Fernley. CFA will submit plans and applications to utility providers, as necessary.

TASK C2.6 – PERMIT REVIEW AND PROCESSING (T&M)

CFA will address all agency review comments and redlines, outside of the work specified in the previous design milestones, relative to the civil improvement plans/reports and prepare revised sheets, as needed, to obtain the building permit. CFA will also provide printing of any plans, specifications, and permits as required.

TASK C2.7 – BIDDING SERVICES (T&M)

CFA will provide services related to the bidding and awarding of the project's first phase. CFA will determine phasing specific material quantities and specification updates as well as manage the advertisement and distribution of the plan set and specifications in Portable Document Format (PDF). CFA will attend the pre-bid meeting and be available to answer any technical questions. All questions and responses will be documented and provided to the City of Fernley. All questions regarding legal aspects of the contract will be directly referred to the City of Fernley. CFA will attend the bid opening, review the bids received for irregularities, tabulate all bids received, and provide a recommendation for award.

TASK C2.8– CIVIL ENGINEERING CONSTRUCTION SUPPORT (T&M)

CFA will provide construction administration services for the phase one improvements to include review of shop drawings, review and respond to contractor request for information (RFI), review and approval of contractor submittals for conformance to the contract documents.

CFA will attend any preconstruction meetings and provide construction support during the installation of the civil improvements. For budgeting purposes, we are estimating a two (2) month construction duration. Should the Contractor's scheduled duration vary, we will provide an updated estimate. Based on similar projects that we have completed; we estimate construction support will require an average of two (2) hours of an engineer's time per week for the construction duration. The services to be provided include:

- Site visits during installation of civil improvements
- Review and response to contractor requests for information (RFI)
- Review and approval of contractor submittals for conformance to the contract documents
- Assist in preparation of a final punch list associated with civil improvements
- Drafting of final As-Built drawings

TASK SM2 – PHASE 1 CONSTRUCTION STAKING ESTIMATE

CFA will provide the following construction staking for the In-Town Park improvements:

CONTROL VERIFICATION

- CFA will locate and verify the control used for the topographic survey is still in place and in acceptable condition for staking improvements. Additional control will be established to complete the construction staking services.

FINISH GRADE (150 ESTIMATED STAKED POINTS)

- Stake curb at angle points, grade breaks and 50-foot intervals on tangents.
- Stake concrete flatwork at angle points, grade breaks and 50-foot intervals on tangents.
- Stake corners of shade structures and trash enclosure.

UTILITY STAKES (75 ESTIMATED STAKED POINTS)

- Utilities will be staked with two stakes per manhole, clean-out, and angle point with one stake per lateral. Staking will be provided for the following items:
- Sanitary sewer manholes, clean-outs, and line.

- Storm drain manholes, area drains and line.
- Electric boxes and light standards.
- Water line, drinking fountain and fire hydrant(s).

OFFICE SUPPORT

- Provide the necessary office support and calculations to assist our survey crews in the field.

PART 3 – PHASE TWO PLANS

C3.1 – Schematic Design (SD)

TASK C3.1A – SITE AND DEMOLITION PLANS (SD)

CFA will prepare linework for the phase two proposed park improvements and have budgeted for two rounds of client revisions. A 60% review of the plans by the City of Fernley has been accounted for to update the budget and confirm phasing limits from the design concept phase. A geometric site plan will be developed based on prior discussion and comments from the design concept phase. The civil site and demolition plans will show existing improvements to remain, or to be removed, proposed civil improvements, references to job specific details, and site work dimensions necessary for construction, including boundary, easements, and structure setbacks (if required). For the purposes of this proposal, it is assumed that major water and sewer improvements will not be required. Electric and site lighting will be shown schematically based on designs by others. Light pole base design and structural calculations shall be provided by others (e.g., structural engineer or geotechnical engineer), when applicable. This item has been specifically excluded from this portion of the proposal.

TASK C3.1B – SITE GRADING AND DRAINAGE PLAN (SD)

CFA will prepare a 60% grading and drainage plan for the proposed park and adjacent flatwork to include finish grade contours and spot elevations. Earthwork quantity estimates will not be provided. If required, structural retaining wall calculations, wall details, and footing details shall be provided by others (e.g., structural engineer or geotechnical engineer), when applicable. These items have been specifically excluded from this portion of the proposal. Storm drain facilities are known to exist on site in the form of infiltration trenches and chambers. Based on best available knowledge of the systems, CFA will confirm capacities of existing infrastructure and identify improvements as necessary relative to the increased amount of impervious surface proposed for the site. We have assumed that all adjacent off-site public storm drain has adequate capacity for the proposed additions of this park; therefore, design of off-site storm drain utilities is not included in this proposal.

C3.2 - Design Development (DD)

TASK C3.2A – SITE AND DEMOLITION PLANS (DD)

CFA will prepare linework for the proposed phase two park improvements and have budgeted for one round of client revisions. A 90% review of the plans by the City of Fernley has been accounted for to update the budget and confirm phasing limits from the SD phase. A geometric site plan will be developed based on prior discussion and comments from the SD phase. The civil site and demolition plans will show existing improvements to remain, or to be removed, proposed civil improvements, references to job specific details,

and site work dimensions necessary for construction, including boundary, easements, and structure setbacks (if required). For the purposes of this proposal, it is assumed that major water and sewer improvements will not be required. Electric and site lighting will be shown schematically based on designs by others. Light pole base design and structural calculations shall be provided by others (e.g., structural engineer or geotechnical engineer), when applicable. This item has been specifically excluded from this portion of the proposal.

TASK C3.2B – SITE GRADING AND DRAINAGE PLAN (DD)

CFA will prepare a 90% grading and drainage plan for phase two of the proposed park and adjacent flatwork to include finish grade contours and spot elevations. Earthwork quantity estimates will not be provided. If required, structural retaining wall calculations, wall details, and footing details shall be provided by others (e.g., structural engineer or geotechnical engineer), when applicable. These items have been specifically excluded from this portion of the proposal. Storm drain facilities are known to exist on site in the form of infiltration trenches and chambers. Based on best available knowledge of the systems, CFA will confirm capacities of existing infrastructure and identify improvements as necessary relative to the increased amount of impervious surface proposed for the site. We have assumed that all adjacent off-site public storm drain has adequate capacity for the proposed additions of this park; therefore, design of off-site storm drain utilities is not included in this proposal.

C3.3 – Construction Documents (CD)

Task C3.3A – Site and Demolition Plans (CD)

CFA will finalize linework for the proposed phase two park. A final review of the phase two plans by the City of Fernley has been accounted for to update the budget and confirm phasing limits from the DD phase. A geometric site plan will be developed based on prior discussion and comments from the DD phase. The civil site and demolition plans will show existing improvements to remain, or to be removed, proposed civil improvements, references to job specific details, and site work dimensions necessary for construction, including boundary, easements, and structure setbacks (if required). For the purposes of this proposal, it is assumed that major water and sewer improvements will not be required. Electric and site lighting will be shown schematically based on designs by others. Light pole base design and structural calculations shall be provided by others (e.g., structural engineer or geotechnical engineer), when applicable. This item has been specifically excluded from this portion of the proposal.

Task C3.3B – Site Grading and Drainage Plan (CD)

CFA will finalize the grading and drainage plan for phase two of the proposed park and adjacent flatwork to include finish grade contours and spot elevations. Earthwork quantity estimates will not be provided. If required, structural retaining wall calculations, wall details, and footing details shall be provided by others (e.g., structural engineer or geotechnical engineer), when applicable. These items have been specifically excluded from this portion of the proposal. Storm drain facilities are known to exist on site in the form of infiltration trenches and chambers. Based on best available knowledge of the systems, CFA will confirm capacities of existing infrastructure and identify improvements as necessary relative to the increased amount of impervious surface proposed for the site. We have assumed that all adjacent off-site public storm drain has adequate capacity for the proposed additions of this park; therefore, design of off-site storm drain utilities is not included in this proposal.

TASK C3.4 – DETAILS, SPECIFICATIONS, AND QUANTITIES

CFA will prepare site specific construction details for the civil improvements. Details and specifications will be shown on the plans and/or referenced to the Standard Specifications for Public Works Construction, as required by the reviewing agencies. CFA will develop project specific specifications to outline the construction methods and materials. A quantity estimate will be developed to provide an idea of project phasing.

TASK C3.5 – MEETINGS, APPLICATIONS, AND COORDINATION (T&M)

CFA will meet, correspond, and coordinate with public agencies, other consultants, and the City of Fernley to ensure compatibility between civil plans and other disciplines. Research and coordinate suppliers, specifications, and available pricing for proposed shade structures, as necessary. We will also prepare commercial service applications and provide base map information to utility purveyors as needed. CFA will coordinate utility services and assist the client in obtaining necessary "Will Serve" letters from the City of Fernley, as required. Since the project area will be larger than one acre, we will prepare a Dust Control Permit and a NDEP Notice of Intent (NOI) application as requested by the contractor. Storm Water Pollution Prevention Plan (SWPPP) to be completed by the Contractor. CFA will provide signed copies of any applications required by the City of Fernley. CFA will submit plans and applications to utility providers, as necessary.

TASK C3.6 – PERMIT REVIEW AND PROCESSING (T&M)

CFA will address all agency review comments and redlines, outside of the work specified in the previous design milestones, relative to the civil improvement plans/reports and prepare revised sheets, as needed, to obtain the building permit. CFA will also provide printing of any plans, specifications, and permits as required.

TASK C3.7 – BIDDING SERVICES (T&M)

CFA will provide services related to the bidding and awarding of the project's second phase. CFA will determine phasing specific material quantities and specification updates as well as manage the advertisement and distribution of the plan set and specifications in Portable Document Format (PDF). CFA will attend the pre-bid meeting and be available to answer any technical questions. All questions and responses will be documented and provided to the City of Fernley. All questions regarding legal aspects of the contract will be directly referred to the City of Fernley. CFA will attend the bid opening, review the bids received for irregularities, tabulate all bids received, and provide a recommendation for award.

TASK C3.8– CIVIL ENGINEERING CONSTRUCTION SUPPORT (T&M)

CFA will provide construction administration services for the phase two improvements to include review of shop drawings, review and respond to contractor request for information (RFI), review and approval of contractor submittals for conformance to the contract documents.

CFA will attend any preconstruction meetings and provide construction support during the installation of the civil improvements. For budgeting purposes, we are estimating a two (2) month construction duration. Should the Contractor's scheduled duration vary, we will provide an updated estimate. Based on similar projects that we have completed; we estimate construction support will require an average of two (2) hours of an engineer's time per week for the construction duration. The services to be provided include:

- Site visits during installation of civil improvements
- Review and response to contractor requests for information (RFI)
- Review and approval of contractor submittals for conformance to the contract documents
- Assist in preparation of a final punch list associated with civil improvements
- Drafting of final As-Built drawings

TASK SM3 – PHASE 2 CONSTRUCTION STAKING ESTIMATE
CFA will provide the following construction staking for the In-Town Park improvements:

CONTROL VERIFICATION

- CFA will locate and verify the control used for the topographic survey is still in place and in acceptable condition for staking improvements. Additional control will be established to complete the construction staking services.

FINISH GRADE (150 ESTIMATED STAKED POINTS)

- Stake curb at angle points, grade breaks and 50-foot intervals on tangents.
- Stake concrete flatwork at angle points, grade breaks and 50-foot intervals on tangents.
- Stake corners of shade structures and trash enclosure.

UTILITY STAKES (75 ESTIMATED STAKED POINTS)

- Utilities will be staked with two stakes per manhole, clean-out, and angle point with one stake per lateral. Staking will be provided for the following items:
- Sanitary sewer manholes, clean-outs, and line.
- Storm drain manholes, area drains and line.
- Electric boxes and light standards.
- Water line, drinking fountain and fire hydrant(s).

OFFICE SUPPORT

- Provide the necessary office support and calculations to assist our survey crews in the field.

PART 4 - OUTSIDE SUB-CONSULTANT SERVICES

The following outside services will be invoiced and managed under this proposal. Tasks under this portion are to be released individually by the City of Fernley based on limits of phased work. This has been requested by the client to provide one primary source of contact and billing for much of the services necessary. All outside services identified will be invoiced at a rate of cost +15%.

TASK O1 – LANDSCAPE CONSTRUCTION DOCUMENTS/ADMIN SERVICES (LA STUDIO NEVADA)
This task will cover charges from LA Studio Nevada (LASN) for preparation of final landscaping and irrigation plans for submittal to the City of Fernley for the proposed park improvements. This task also covers anticipated construction administration services. The services to be provided under this task are identified in the attached proposal from LASN (Attachment A).

TASK O2 – STRUCTURAL CONSTRUCTION DOCUMENTS/SPECIFICATIONS (LINCHPIN STRUCTURAL ENGINEERING)
This task will cover charges from Linchpin Structural Engineering (LSE) for preparation of final structural plans and specifications for the design of light pole bases. The services to be provided under this task are identified in the attached proposal from LSE (Attachment B).

TASK O3 – ELECTRICAL AND SITE LIGHTING CONSTRUCTION DOCUMENTS/SPECIFICATIONS (PK ELECTRICAL)
This task will cover charges from PK Electrical (PKE) for the preparation of final electrical and lighting plans, as well as project specific specifications. The services to be provided under this task are identified in the attached proposal from PKE (Attachment C).

FEES
CFA will provide the services outlined above for the following fees:

Task SM1 – Boundary and Topographic Surveying & Mapping	$	14,395
Part 1 – Preliminary Design Concept		
Tasks C1A – Site and Demolition Plans	$	7,200
Tasks C1B – Meetings, Applications & Coordination (T&M)	$	1,250*
Part 2 – Phase 1 Plans		
Tasks C2.1A-C2.4 – SD/DD/CD Plans and Specifications	$	18,850
Task C2.5 – Meetings, Applications & Coordination (T&M)	$	4,000*
Task C2.6 – Permit Review & Processing (T&M)	$	1,600*
Task C2.7 – Bidding Services (T&M)	$	5,800*
Task C2.8– Civil Engineering Construction Support (T&M)	$	2,000*
Task SM2 – Construction Surveying (Est.)	$	8,735
Part 3 – Phase 2 Plans		
Tasks C3.1A-C3.4 – SD/DD/CD Plans and Specifications	$	18,350
Task C3.5 – Meetings, Applications & Coordination (T&M)	$	4,000*
Task C3.6 – Permit Review & Processing (T&M)	$	1,600*
Task C3.7 – Bidding Services (T&M)	$	5,800*
Task C3A– Civil Engineering Construction Support (T&M)	$	2,000*
Task SM3 – Construction Surveying (Est.)	$	8,735
Part 4 – Outside Sub-Consultant Services		
Task O1 – Landscape Construction Drawings/Admin Services	$	4,600
Task O2 – Structural Construction Documents/Specifications	$	2,300
Task O3 – Electrical and Site Lighting Construction Documents/Specifications	$	8,625
Total Fee (Including T&M Items):	**$**	**119,840**

*Notes: * - Client understands that the T&M estimated costs provided herein are estimates only, that T&M identified services will be performed on a time & materials basis, and that various line items included herein may be either exceeded or reduced by actual billing.*

ITEMS TO BE PROVIDED BY CLIENT
You will need to provide us with the following items:

- All fees payable to government entities.
- Owner/applicant affidavits.
- All fees payable to utility companies.
- Existing utility data and construction documents relating to the park
- Existing site lighting information and plans.
- Existing landscaping and irrigation plans and demands, as available.
- Geotechnical report, if necessary.
- Structural design of retaining walls, and shade structure foundations, if necessary.
- Client understands that the T&M estimated costs provided herein are estimates only, that T&M identified services will be performed on a time & materials basis, and that various line items included herein may be either exceeded or reduced by actual billing.

Thank you for contacting CFA regarding this project. We are confident we will provide the quality and timeliness of professional services needed to assist in making this a successful project. If the terms of this proposal are acceptable, we will forward our standard contract for your signature. Should you have any questions or require additional information, please feel free to contact me at (775) 856-7074 or by email at kknight@cfareno.com.

Regards,
CFA, Inc.



Kathleen Knight, P.E.
Engineering Manager

682-665-02-23

L.A. StudioNevada
the landscape architecture studio

February 27, 2023

Ian Meyer, E.I.
Civil Designer/Assistant Planner
CFA, INC.
1150 Corporate Boulevard
Reno, NV 89502
imeyer@cfareno.coM

RE: **Proposal for Landscape Architectural Design Services – Landscape Construction Documents**
In Town Skate Park Enhancement Plantings, Fernley NV

Ian,

Thank you for this opportunity to present **CFA, INC.** (hereafter referred to as Client) our proposal for preparing landscape architectural documents for the above-referenced project. Our proposed scope of work and associated fees are as follows:

SCOPE-OF-WORK

1.00 **Landscape Construction Documents** – L.A. Studio Nevada will provide landscape construction drawings, for the location where existing trees will be removed along SR 95A (attached), as follows:

1.01 **Planting Plan** - The planting plan will indicate the type, location, size, and condition of all trees, shrubs, and groundcover.
1.02 **Irrigation Plan –** The irrigation plan will depict reclaimed irrigation for all landscaping listed in Task 1.01 above. The plan will schematically indicate type and location of all irrigation appurtenances including piping, valve, controllers, and emission devices.
1.03 **Planting and Irrigation Specifications –** Planting and Irrigation Specifications will be provided as a Word document for inclusion in the project handbook.
1.04 **Planting and Irrigation Details** - The detail plan will depict proper installation of all planting and irrigation.
1.05 **Landscape Water Demand –** L.A. Studio Nevada will prepare an estimated landscape water demand for submittal to the water authority if required.

2.00 **Construction Administration Services –** L.A. Studio Nevada will review landscape and irrigation submittals. During construction we will visit the site and prepare a punch-list regarding planting and irrigation deficiencies if any are observed. Upon completion of the installation (by others) L.A. Studio Nevada will prepare a landscape certification letter as required by the regulatory agency.

3.00 **Misc. Expenses –** Fees for meetings and reimbursable expenses will be billed as follows:
3.01 **Meetings –** No meetings are anticipated and are not included in this proposal. Meetings, if requested, will be billed on a time & material basis as follows:

- Principal/Senior Landscape Architect .....$150 per hour
- Landscape Architect/Project Manager .....$125 per hour

3.02 **Reimbursable Expenses** - Reimbursable services such as printing, plotting, etc, will be billed at cost plus 15%. In-house prints and plots will be billed at $3.00 EA. LA Studio Nevada will provide .pdf plan files for printing by Client at no additional cost.

FEES FOR IN TOWN SKATE PARK, FERNLEY NV

The following table presents a breakdown of our approximate fees for each task with the project to be billed on a lump sum basis except for time-and-material (T&M) tasks as noted in the Scope-of-Work.

TASK		FEE
1.00	Landscape Construction Documents	$3,500.00
2.00	Construction Administration Services	$500.00
3.00	Misc. Expenses (none anticipated if printing for submittals is by Client)	T&M

Insurance: L.A. Studio Nevada carries General Liability (GL), Errors & Omission, Worker's Comp (as required by the State of Nevada), and Auto Liability insurance. Sample certificates of insurance and the additional insured forms containing the waiver and primary wording that is on L.A. Studio Nevada's policy will be provided upon request. If needed, please review L.A. Studio Nevada's current insurance coverage to ensure that it will meet your requirements. Acceptance of this proposal and/or a request to proceed with work indicates acceptance of L.A. Studio Nevada's current insurance coverage by Client.

Upon initiation of the landscape construction documents, changes to the landscape plans resulting from revisions to the site plan will be billed on a time-and-material basis. To proceed, L.A. Studio Nevada will need a copy of the base drawing in AutoCAD. Work performed by L.A. Studio Nevada will be billed on a percent complete basis plus expenses for printing, plotting, and mileage. Our terms of payment are payment-in-full for services rendered within thirty days of the date of invoice for said services. If you agree with these terms, and would like us to proceed, please sign and return a copy of this *Authorization to Proceed* to our office.

This proposal is valid for 90 days from the date shown on the proposal. Thank you for considering our firm to provide landscape architectural services. Please let us know if you have any questions.

L.A. STUDIO NEVADA, LLC

Daniel R. Johnston, MBA CPSI
General Manager - Operations and Business Development
Certified Playground Safety Inspector #55398-825
Certified Nurseryman

Authorization to Proceed:

_____ Date: _____
(Signature)

_____ Title: _____
(Company)

March 22, 2023

Ian Meyer, CFA, Inc.
1150 Corporate Blvd
Reno, Nevada 89502
via email – IMeyer@cfareno.com (Ian Meyer), kknight@cfareno.com (Kathleen Knight)

RE: Proposal for Structural Engineering Services for In Town Skate Park Light Pole
100 State Route 95A, Fernley, NV 89408

Linchpin Structural Engineering, Inc. (Linchpin) is pleased to provide you with this proposal for professional services for the referenced project. The proposal briefly presents the project description and scope of services. It, with the attached Terms and Conditions, will serve as the contract for our services and encompasses the requisite content.

Project Description

This project is the design of a pole foundation and anchorage to support new park light poles. All new light poles are anticipated to be identical and will utilize the same footing detail.

Scope

Linchpin will provide the following professional services:

Structural Engineering: Linchpin will design the footings and anchorage to current Building Code. The project manager will attend meetings and coordinate with the Client to provide a structural design that meets and compliments the intention of the design. Deliverables for this phase is a foundation and anchorage detail, and calculation package.

Additional Services: Services not specifically described above will be billed as additional services.

Assumptions and Limitations

Changes to the following items will cause changes to Linchpin's estimated fees and work schedule:

- A soils report will not be required for this project. Prescriptive soil design values will be used for our design. If a report is determined to be required, it will be provided in a timely manner by a third party.
- There will be a normal amount of design coordination and meetings during design.
- All light poles will be the same and utilizes the same footing detail.

Linchpin is a signatory to the SE2050 agreement, an effort to address the negative environmental impacts associated with structures and their construction and eliminate embodied carbon in our designs by the year 2050. To that end, we will be modifying our structural engineering approach over time to adopt new specifications and design mechanisms aimed at reducing the carbon emissions associated with our designs. There is no impact on the project fees for this endeavor, and we will work with the project team to help mitigate any construction cost impacts and ensure understanding of the design intent. Feel free to reach out to Linchpin with questions about this effort or visit SE2050.org.

Compensation

We will provide Structural Engineering services for the fixed fee of **$2,000**.

Construction Administration and Additional Services will be billed Time and Expenses (T&E) according to the following rate schedule:

Staff	Hourly Rate
Senior Principal	$210
Principal	$190
Associate Principal	$170
Senior Engineer	$160
Associate Engineer	$140
Project Engineer	$120
Drafter	$100

Note that any expenses for document printing will be invoiced in addition to structural engineering fees.

Schedule

We will start services within two weeks of executing this contract. We anticipate a one-week turnaround from that time, depending on coordination with other disciplines.
This schedule assumes this proposal is executed within two weeks of its date.

Expiration

This proposal expires on two weeks from its date.

Agreement

If this proposal and the attached Terms and Conditions are agreeable, please sign a copy and return it to Linchpin. This agreement and attachments will serve as our contract going forward. Thanks for considering Linchpin for this proposal. We look forward to working with you.

Very truly yours,

LINCHPIN STRUCTURAL ENGINEERING, INC.

Senior Engineer, License #20543

Attachments: Terms and Conditions

Approved:

_____

Date

Print Name: _____

Billing Address: _____

_____

Email: _____

(For Invoicing Purposes)

PK Electrical, Inc.
Engineering · Design · Consulting

681 Sierra Rose Drive, Suite B | Reno, NV 89511 | 775.826.9010
4601 DTC Boulevard, Suite 740 | Denver, CO 80237 | 720.481.3290
pkelectrical.com

Contract Proposal

CP23142

Proposal For

Ian Meyer, E.I.
CFA, Inc.
1150 Corporate Boulevard
Reno, NV 89502
imeyer@cfareno.com

From

Joey Ganser, P.E.
Principal | Engineering

Mar 23, 2023

Project

Fernley In Town Park Site Lighting Addition

Project Description

This project is to provide new security and pedestrian level lighting at In Town Park located in Fernley, NV. New pole mounted pathway lighting shall be LED full cut-off and dark sky compliant. Decorative fixture and pole selection shall include input from the Owners. Lighting levels will comply with IES recommendations. The project will also include new shade structures which will have new lighting associated. Lighting for shade structures shall be surface mounted below structure and will be provided with local lockable controls. All new circuiting and controls shall be installed in a new conduit and pull box system. Lighting design shall also comply with IECC 2018 requirements for power density and control requirements. Design excludes parking lot lighting and ballfield lighting.

The electrical design will include the lighting design using cut off, dark sky compliant type LED fixtures, IECC 2018 energy calculations including design of compliant lighting control measures, and site lighting photometric calculations. Power to the new parking lot will come from the existing electrical service.

For purposes of this proposal, it is assumed that the existing electrical services and panels at the park are of sufficient size and have spare capacity for the new electrical circuiting and loads. A complete electrical upgrade and / or electrical panel replacement is not included in our scope or fee.

Scope of Services

Design Phase Services include site investigation, consultation, calculations, permit & construction documents and specifications. We will attend local (Reno) design meetings as required to coordinate with other trades.

Deliverables include: 50% Construction Documents drawings and sheet specifications; 100% Construction Documents / Permit drawings, specifications, and calculations.

Bid/Permit Phase Services include responding to plan review comments and reissuing drawings as needed; responding to bidder questions, issuing written narratives & revision sketches.

Construction Administration Services include consultation, submittal and shop drawings review, responses to RFIs and revisions to contract drawings. We will attend local (Reno) design meetings as required to coordinate with other trades and will provide contract administration services as required for a complete project. Project Close-Out to include record drawings & O&M Manual review.

Site Visits include one (1) site visit during design and one (1) site visit for final punch and inspection.

Project Design Schedule: start date will commence upon receipt of signed proposal or agreement and the completion date shall be established by the project team and/or Owner at the start of design. It is understood that the design phase is expected to be accelerated for an expedited completion.

Exclusions: electrical service upgrade; sports lighting design; cost estimating; digital renderings; permit, plan check, and utility fees; completing building department and utility applications and submitting plans to these agencies; arc flash and coordination study.

PK Electrical, Inc.
Engineering · Design · Consulting

681 Sierra Rose Drive, Suite B | Reno, NV 89511 | 775.826.9010
4601 DTC Boulevard, Suite 740 | Denver, CO 80237 | 720.481.3290
pkelectrical.com

Fee and Structure

		Amount
Construction Documents	Fixed Fee	6,000.00
Construction Administration	Fixed Fee	1,500.00
	Total Amount	**$7,500.00**

Terms and Conditions

PK Electrical carries professional liability insurance with $5M/$5M limits. See attached Terms and Conditions.

Authorization and Acceptance

(Acknowledgment of Concurrence with the foregoing)

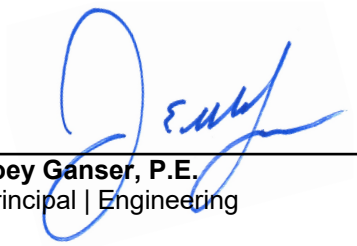

Joey Ganser, P.E.
Principal | Engineering

Ian Meyer, E.I. Date
Civil Designer / Assistant Planner

CFA, INC.
AGREEMENT FOR PROFESSIONAL SERVICES
Project Job Number/Description: In Town Park

THIS AGREEMENT FOR PROFESSIONAL SERVICES ("Agreement") is effective as of 3/10/2023, Amended 3/28/2023 ("Effective Date") between City of Fernley ("Client") and CFA, INC., a Nevada corporation ("CFA"). Client intends to create the project or series of projects set forth in the Proposal attached hereto dated 3/28/2023, commonly known as In Town Park, as the same may be amended or supplemented from time to time in accordance with this Agreement (each such project being referred to as "Project"). Client and CFA, in consideration of their mutual covenants as set forth herein, agree as follows:

1. Services of CFA. CFA shall provide the services set forth herein and in the Proposal, attached hereto and incorporated by reference ("Services").

1.1 If specific periods of time and dates for rendering and completing the Services are set forth in the Proposal or this Agreement, and such periods of time or dates are changed through no fault of CFA or if CFA's Services are extended by Client or its contractor's actions or inactions for more than thirty (30) days after such specified periods of time or dates, the rates and amounts of compensation provided for herein shall be adjusted to reimburse CFA for all costs and expenses incurred in connection with, among other things, such delay or suspension and reactivation and the fact that the time for performance under this Agreement has been revised. If Client requests changes in the scope, extent or character of the Project from that originally set forth in the Proposal, the time for performance of CFA's Services shall be subject to adjustment to reflect such changes.

2. Payments to CFA. Client shall pay CFA as provided herein according to the Proposal and the Fee Schedule attached as Exhibit 1. Upon the execution of this Agreement, Client shall deposit with CFA a security deposit in the amount of $ N/A (the "Deposit Amount") for work to be performed pursuant to this Agreement. If Client fails to pay any invoice when due, CFA may offset the amount of the invoice against the security deposit without notice to Client, and Client, upon demand from CFA, shall immediately restore that portion of the Deposit Amount so used so that the full Deposit Amount is restored. CFA shall have no obligation to pay Client interest on the Deposit Amount, and, upon Client's performance of all its obligations hereunder as of the termination of CFA's Services, any unused portion of the Deposit Amount will be returned to Client.

2.1 Invoices are due and payable within thirty (30) days following the issuance of the Invoice. Client shall pay CFA interest of one and one-half percent (1.5%) per month (18% per annum) on any past-due balance. In the event Client objects to a charge on any Invoice, Client must provide CFA with written notice of such objection within thirty (30) days of issuance of an Invoice, or the fees charged in the Invoice shall be deemed accepted by Client and any objection thereto shall be deemed waived by Client.

3. Standards of Performance. CFA shall exercise the same degree of care, skill and diligence in the performance of the Services as is ordinarily provided by others practicing under similar circumstances in the same geographic vicinity and at the time the Services are performed. No warranty, representation or guarantee, express or implied, of any kind is made or intended by this Agreement.

3.1 Responsibility for Acts of Others. CFA shall not be responsible for the work performed by Client or any contractor, subcontractor, sub-consultant, vendor, design professional, supplier or project participant other than CFA.

3.2 Design without Construction Phase Services. If CFA's Services do not include Construction Observation and Construction Administration services as part of the construction phase, Client shall assume all

responsibility for interpretation and implementation of all plans, drawings, contract documents, reports, recommendations, specifications and conditions for the Project ("Contract Documents") and waives any claims against CFA that may be in any way connected thereto. Client further agrees to indemnify, defend and hold CFA harmless from any claim, liability, damages or costs, including attorneys' fees, for injury or loss arising from problems during the construction phase related to the interpretation and implementation of the Contract Documents.

4 Suspension & Termination. CFA or Client may suspend the work or terminate this Agreement, with or without cause, upon seven (7) days' written notice. CFA may suspend work without notice if past-due payment amounts extend beyond 60-days from the invoice date. In the event the work is suspended or this Agreement is terminated, for any reason other than CFA's failure to substantially perform in accordance with the terms of this Agreement or by CFA without cause, CFA may recover: (i) all time and material charges up to the date of suspension or termination; and (ii) any costs incurred by CFA to demobilize its staff and remove equipment from the Project site.

5. Dispute Resolution. CFA and Client agree that they shall submit any and all unsettled claims, disputes, and other matters in question between them arising out of or relating to this Agreement or the breach thereof, the services or the Project ("Disputes") to binding arbitration in accordance with the provisions of Chapter 38 of the Nevada Revised Statutes unless the parties agree otherwise in writing. This agreement to arbitrate and any other agreement or consent to arbitrate entered into in accordance herewith as provided in this paragraph will be specifically enforceable under prevailing law of any Nevada court having jurisdiction. Notice of the demand for arbitration must be filed in writing with the other party to the Agreement. In no event may the demand for arbitration be made after the date when institution of legal or equitable proceedings based on such Disputes would be barred by the applicable statutes of limitations as set forth herein. The award rendered by the arbitrator(s) shall be final and judgment may be entered upon it in accordance with Nevada law. The award is subject to and limited by the provisions of this Agreement.

6. LIMITS OF LIABILITY. IN ORDER TO OBTAIN THE BENEFITS OF A FEE WHICH INCLUDES A LESSER ALLOWANCE FOR RISK FUNDING, AND IN RECOGNITION OF THE RELATIVE RISKS AND BENEFITS TO BOTH THE CLIENT AND CFA, THE RISKS HAVE BEEN ALLOCATED SUCH THAT CLIENT AGREES, TO THE FULLEST EXTENT PERMITTED BY LAW, TO LIMIT THE RISKS AND LIABILITY OF CFA TO THE CLIENT AND TO ALL OTHER PARTIES, INCLUDING OWNERS AND SUBSEQUENT OWNERS OF THE PROJECT, CONTRACTORS, SUBCONTRACTORS, CONSULTANTS, LENDERS, SUPPLIERS, MANUFACTURERS AND SECURED PARTIES FOR ALL CLAIMS, LOSSES, COSTS, DAMAGES OR EXPENSES OF ANY NATURE, INCLUDING ATTORNEY'S FEES, SUCH THAT THE TOTAL AGGREGATE LIABILITY OF CFA, ITS OWNERS, OFFICERS, DIRECTORS, PARTNERS, EMPLOYEES, VENDORS AND SUBCONSULTANTS, SHALL NOT EXCEED CFA'S TOTAL FEE FOR THE SERVICES RENDERED ON THIS PROJECT. IT IS INTENDED THAT THIS LIMITATION APPLY TO ANY AND ALL LIABILITY OR CAUSE OF ACTION AGAINST CFA HOWEVER ALLEGED OR ARISING, INCLUDING, WITHOUT LIMITATION, CLAIMS OF PROFESSIONAL ERRORS OR OMISSIONS, NEGLIGENCE INCLUDING THE SOLE NEGLIGENCE OF CFA, STRICT LIABILITY, BREACH OF CONTRACT, BREACH OF WARRANTY, BREACH OF THE COVENANT OF GOOD FAITH AND FAIR DEALING, INDEMNITY AND/OR CONTRIBUTION OR ANY OTHER CAUSE OF ACTION OR CLAIM WHETHER ARISING IN CONTRACT, TORT, STRICT LIABILITY, WARRANTY OR EQUITY. CLIENT FURTHER AGREES TO DEFEND, INDEMNIFY, PROTECT, HOLD HARMLESS AND REIMBURSE CFA AS TO ALL CLAIMS, LIABILITIES, DAMAGES, COSTS, AND EXPENSES OF ANY NATURE, INCLUDING ATTORNEY'S AND EXPERT'S FEES, BROUGHT BY CLIENT OR ANY THIRD PARTY, INCLUDING THOSE NAMED ABOVE WHICH EXCEED THIS AGGREGATE AMOUNT. THIS OBLIGATION SHALL SURVIVE TERMINATION OF THIS AGREEMENT.

6.1 WAIVER OF CONSEQUENTIAL DAMAGES. NOTWITHSTANDING ANYTHING HEREIN TO THE CONTRARY, CFA SHALL NOT BE LIABLE TO CLIENT FOR ANY CONSEQUENTIAL LOSSES OR DAMAGES, INCLUDING, BUT NOT LIMITED TO, LOSS OF USE, ECONOMIC LOSSES, BUSINESS INTERRUPTION, DELAY COSTS, FINANCING AND INTEREST COSTS OR LOST PROFITS, WHETHER SUCH CLAIMS ARISE IN CONTRACT, TORT, STRICT LIABILITY, WARRANTY, EQUITY, BREACH OF THE COVENANT OF GOOD FAITH AND FAIR DEALING, OR OTHERWISE.

6.2 No Personal Liability. The Services are being performed by CFA as a Nevada Corporation. It is intended by the parties to this Agreement that CFA's Services in connection with the Project shall not subject CFA's owners, individual employees, officers or directors to any personal legal exposure for the risks associated with the Project. Therefore, and notwithstanding anything to the contrary contained herein or by law, Client agrees that its sole

and exclusive remedy, any claim or demand shall be asserted only against CFA, Inc., a Nevada corporation, and not against any individual owners, employees, officers or directors and Client hereby releases any such individual owner, employee, officer or director from any such claim.

7. Attorneys' Fees. In the event that either party incurs attorneys' fees to enforce the terms of this Agreement, the prevailing party shall be entitled to recover from the non-prevailing party all attorney's fees and costs incurred therein, including costs of experts and costs and attorney's fees on appeal, however, CFA's responsibility for Client's attorney's fees and costs shall be limited such that CFA's total liability, including Client's claim for attorney's fees and costs, does not exceed the aggregate limit of liability set forth in Paragraph 6 above. This obligation shall survive termination of this Agreement.

IN WITNESS WHEREOF, the parties hereto have executed this Agreement as of the Effective Date set forth on page 1.

City of Fernley	CFA, INC., a Nevada Corporation
By: _____	By: _____
Title: _____	Title: _____
Date Signed: _____	Date Signed: _____
Address for giving notices:	Address for giving notices:
_____	CFA, Inc.
_____	1150 Corporate Boulevard
_____	Reno, NV 89502

SCHEDULE OF EXHIBITS

Exhibits Included:

Exhibit 1, “Fee Schedule”

EXHIBIT 1

2022 Master Fee Schedule (Rev 1)

(Effective 4/5/2022)

Job Description	Rate Per Hour
President	$225
Department Manager Engineering/Land Surveying/Planning	$195 - $220
Senior Project Manager - Engineering/Land Surveying/Planning/Remote Sensing	$160 - $185
Project Manager – Engineering/Land Surveying/Planning/Remote Sensing	$140 - $160
Project Engineer/Land Surveyor/Planner	$120 - $140
Senior Civil Designer/Senior Land Survey Technician/	$110 - $135
Civil Designer/Land Survey Technician/Remote Sensing Technician	$90 - $110
Civil Technician/Land Survey Draftsman/Assistant Planner	$75 - $90
Intern Engineering/Land Surveying/Planning/Remote Sensing	$65 - $75
1-Man Survey Crew with Truck & Equipment (Mileage Included)	$125 - $165
Additional Survey Crew Members (Personnel Only)	$50 - $75
Clerical	$65 - $75
Construction Observation	$100 - $110

Notes

1. Direct expenses such as reproduction, postage, express mail, subsistence, and travel will be billed additionally as a direct expense.

2. Vehicle miles may be charged at the current federal rate per mile.

3. Overtime may be charged at 1.50 times the fee schedule.

4. Court-related research and appearances including but not limited to depositions or other legal testimony, and research for any legal proceedings will be charged at 1.5 times the hourly rate.

5. Vehicles used for Construction Observation projects may be billed at $10.00 per hour.

6. This fee schedule is subject to change on an annual basis. Rates for existing contracts will be honored.

CITY OF FERNLEY

City Council
AGENDA REPORT

Meeting Date: April 19, 2023

REPORT TO:	Mayor and City Council
REPORT FROM:	**Lydia Altick, Deputy City Manager**

FINANCIAL IMPACT:		**CURRENTLY BUDGETED:**		**FUND/ACCOUNT:**
Yes:	No: X	Yes:	No: X	N/A

ACTION REQUESTED: Consent

AGENDA ITEM: (For Possible Action):

Possible action to approve the 2022 Emergency Operations Plan for the City of Fernley.

AGENDA ITEM BRIEF:

Nevada Revised Statutes require an annual review of the City's local emergency operations plan. A review and subsequent update to the City's EOP was completed and uploaded to the Nevada Division of Emergency Management / Homeland Security's website on December 30, 2022. A copy of the EOP was sent out to staff in January 2023 for review. Staff is now requesting Fernley City Council's approval of the EOP.

RECOMMENDED MOTION:

N/A

BUSINESS IMPACT (per NRS Chapter 237):

A Business Impact Statement is not required because this is not a rule (term excludes vehicles by which legislative powers are exercised under NRS Chapters 271, 278, 278A, or 278B).

See attached report for background, analysis, alternatives.

ALTERNATIVES:

N/A

BACKGROUND:

The City of Fernley and Lyon County have agreed to provide a standard and consistent comprehensive emergency management program for the city and the county. As partners in the four phases of emergency management (mitigation, preparedness, response, and recovery), the City of Fernley and Lyon County will coordinate resources and information during all phases of emergency operations.

The City of Fernley Emergency Manager shall be responsible for the coordination, preparation of and continuous updating of the city's Emergency Operations Plan and will work with the Lyon County Emergency Manager and ensure this plan is consistent with similar county, state, and federal plans.

RELEVANT LAWS, STATUTES, AND REGULATIONS:

NRS 239C.250

FINANCIAL IMPLICATIONS:

There are none

ATTACHMENTS:
None

CITY OF FERNLEY

City Council
AGENDA REPORT

Meeting Date: April 19, 2023

REPORT TO:	Mayor and City Council
REPORT FROM:	**Barry Williams**

FINANCIAL IMPACT:		**CURRENTLY BUDGETED:**		**FUND/ACCOUNT:**
Yes:X	No:	Yes:X	No:	520-165100

ACTION REQUESTED: Consent

AGENDA ITEM: (For Possible Action):

Possible Action to purchase one (1), Ford F-450 with crane attachment from Corwin Ford for the City of Fernley's Wastewater Department for an amount not to exceed $101,548.25

AGENDA ITEM BRIEF:

This purchase was originally approved by Council during the FY 21/22 budget process, but manufacturing was delayed due to supply chain issues resulting from the COVID-19 pandemic. If approved, this equipment will be assigned to the Wastewater Department to be utilized in the day-to-day operations of the City's wastewater collection, repair and maintenance operations. The current WW crane truck is 20 years old and has a dangerous crane in poor condition.

RECOMMENDED MOTION:

"I move to Approve the purchase of one (1), Ford F-450 with crane attachment from Corwin Ford for the City of Fernley's Wastewater Department for an amount not to exceed $101,548.25."

BUSINESS IMPACT (per NRS Chapter 237):

N/A

See attached report for background, analysis, alternatives.

ALTERNATIVES:

The council may deny this purchase and provide staff with further direction.

BACKGROUND:

This purchase was originally approved by Council during the FY 21/22 budget process.

Every fiscal year, the State accepts bids from dealerships around Nevada for assorted makes and models of work trucks, cars and light and heavy equipment for purchase by local government agencies. Using the results of the State's competitive bid process is standard practice for municipalities because its saves time and money. The municipality does not have to assemble bid documents, advertise, and rank bidders in order to make a purchase.

Corwin Ford has overseen the manufacturing and is ready to deliver this truck to the City of Fernley. This vehicle is available under the State of Nevada's purchasing contract. If we elect not to purchase this vehicle, we will have to wait for the bid results for the new State purchasing contract, or, City Staff will have to assemble bid specifications, advertise for bids and then rank and award the winning bid. Neither is guaranteed to lower the current price of the vehicle.

RELEVANT LAWS, STATUTES, AND REGULATIONS:

NRS 332.039, NRS 332.195

FINANCIAL IMPLICATIONS:

This purchase will be made using G.L number 520-165100 within the Wastewater Department portion of the FY 22-23 Budget.

ATTACHMENTS:

1. Corwin Ford State Purchasing Price Quote
2. 2022 Superduty Chasis Cab Specification Sheet

CITY OF FERNLEY

CITY COUNCIL
AGENDA REPORT

Meeting Date: September 1, 2021

REPORT TO:	Mayor and City Council
REPORT THRU:	**Daphne Hooper, City Manager**
REPORT FROM:	**Barry Williams, Deputy Public Works Director**
REVIEWED BY:	Brandi Jensen, City Attorney
REVIEWED BY:	Denise Lewis, City Treasurer

FINANCIAL IMPACT:	**CURRENTLY BUDGETED:**	**FUND/ACCOUNT:**
Yes: ☒ **No:** ☐	**Yes:** ☒ **No:** ☐	**520-165100**

ACTION REQUESTED: ☒Consent ☐Ordinance ☐Resolution ☐Motion ☐Receive/File

AGENDA ITEM: Staff Report (For Possible Action): Possible Action to purchase one (1), Ford F-450 with crane attachment from Corwin Ford for the City of Fernley's Wastewater Department for an amount not to exceed $87029.25.

Agenda Item Brief: This purchase was approved by Council during the FY 21/22 budget process. If approved, this equipment will be assigned to the Wastewater Department to be utilized in the day to day operations of the City's wastewater collection, repair and maintenance operations.

Recommended Motion:
"I move to Approve the purchase of one (1), Ford F-450 with crane attachment from Corwin Ford for the City of Fernley's Wastewater Department for an amount not to exceed $87029.25."

Business Impact (per NRS Chapter 237):

☐ A Business Impact Statement is Attached.

☒ A Business Impact Statement is not required because this is not a rule (term excludes vehicles by which legislative powers are exercised under NRS Chapters 271, 278, 278A, or 278B).

See attached report for background, analysis, alternatives.

PROJECT SUMMARY: If approved, this vehicle will be assigned to the Wastewater Department to be utilized in day to day operations. The Department typically relies on vehicles and equipment for 24-hour emergency response relating to the City's collection, repair and maintenance operations.

If approved, this equipment will replace one of the aged and problematic Wastewater Department Vehicles that is currently assigned to the Department which is beyond the service miles and age recommended for vehicle replacement per the City of Fernley Fleet Management Program (PMP) Policy, Table 4.1 Appendix 8, Replacement Standard. If approved, Staff anticipates disposal of the current asset per the FMP Policy.

Staff has chosen a Ford, F-450 with crane attachment from Corwin Ford because this vehicle meets the desired specifications needed for the Wastewater Departments operations. Corwin Ford participates in the Sourcewell State Purchasing Program (formerly NJPA). This program allows the City of Fernley to obtain better vehicle pricing and better vehicle availability.

BACKGROUND: This purchase was approved by Council during the FY 21/22 budget process.

Every fiscal year, the State accepts bids from dealerships around Nevada for assorted makes and models of work trucks, cars and light and heavy equipment for purchase by local government agencies. Using the results of the State's competitive bid process is standard practice for municipalities because its saves time and money. The municipality does not have to assemble bid documents, advertise, and rank bidders in order to make a purchase.

Corwin Ford will oversee the manufacturing and delivery of this truck for the City of Fernley. This vehicle is available under the State of Nevada's purchasing contract. If we elect to not purchase this vehicle, we will have to wait for the bid results for the new State purchasing contract, or, City Staff will have to assemble bid specifications, advertise for bids and then rank and award the winning bid. Neither is guaranteed to lower the current price of the vehicle.

LEGAL IMPLICATIONS: NRS 332.039, NRS 332.195

FINANCIAL IMPLICATIONS: This purchase was budgeted at $90,000 using G.L number 520-165100 within the Wastewater Department portion of the FY 21-22 Budget.

ATTACHMENTS:

1. **Corwin Ford State Purchasing Price Quote**
2. **2022 Superduty Chassis Cab Specification Sheet**



FORD FLEET

Corwin | Ford Reno

3600 Kietzke Lane Reno, NV 89502 Office:775.829.3206 FAX:775.829.3364

Commercial | Fleet Proposal **DATE: 08/04/2021**

Proposal prepared for: CITY OF FERNLEY

Prepared by: Fleet Manager Dennis Tagliarino
Office: 775.829.3206
Fax: 775.829.3364

Quoted Vehicle(s): F450 CRANE TRUCK

Quote ID:

CITY OF FERNLEY QUOTE 2022 F450 CRANE 8/04/21

2022 F450 CRANE TRUCK

STANDARD EQUIPMENT INCLUDED:

V8 GAS ENGINE 7.3
POWER LOCKS AND WINDOWS
TILT
CRUISE CONTROL
AM/FM STEREO

$41,563

ALL TERRAIN TIRES $215
HD FRONT SUSPENSION $125
TRAILER BRAKE CONTROLLER $270

NO SPARE TIRE

ROYAL CRANE $47,637

$87,000 PLUS $29.25 TITLE FEE

ROYAL TRUCK BODY

4242 FORCUM AVENUE
STE# 400
MCCLELLAN, CA 95652
PHONE: 916-921-2639
FAX: 866-346-6103

QUOTATION 0424498

DATE ENTERED	TRUCK ORIGIN		DATE REQUESTED
8/4/2021	DLR		
WRITTEN BY	**SALESMAN**	**TERR**	**DATE PROMISED**
MH	AHJ	AHJ	9/9/9999
END USER (IF DIFFERENT THAN SOLD TO)			**TAX SCHED**
CITY OF FERNLEY			NV

CUSTOMER NO: CORFORD

SOLD
CORWIN FORD RENO
3600 KIETZKE LANE
RENO, NV 89502

SHIP
CORWIN FORD RENO
3600 KIETZKE LANE
RENO, NV 89502

CUST ORDER NO	TERMS	SHIP VIA	TRUCK ETA	CUSTOMER NAME	CUSTOMER PHONE NO
	NET 30	CPU		ANDY LUDEL	

MAKE TRUCK	YEAR	MODEL	COLOR	CA DIM	AUX TANK CONFIG	DEF TANK LOC	AXLE TYPE
Ford		F450		60			

STOCK NO.	V.I.N. NO.	BED WIDTH	COMPT DEPTH	OA WIDTH	FUEL TYPE	CAB TYPE

QTY	PART NO./DESCRIPTION	UNIT PRICE	EXT PRICE
	STREET SIDE ____ CURB SIDE ____ 2021/DEALER UNIT/FORD/F450/REG CAB CHASSIS (DIESEL) 60 CA" DRW		
1	/SP-ACC 40"H X 108"L ROYAL CRANE BODY w/CRANE REINFORCEMENTS UP TO 6000 LB CAPACITY. ALUMINUM LID COVERS, APPEARANCE PACKAGE, LEGAL LED LIGHT PACKAGE. ROYAL'S FORTRESS SECURITY HARDWARE UTILIZING THE ONE-KEY SOLUTION AUTOMOTIVE LOCK PACKAGE FROM BOLT. 4 TIE DOWNS IN BED AREA. PAINTED WHITE.	13,190.0000	13,190.00
1	CRANE-1 CRANE VENTURO CRANE #ET36KX 6000 LB CAPCAITY - 36,00 FT/LB RATING 12V DC ELECTRIC / HYDRAULIC OPERATION POWER ROTATION - 360 DEGREE CONTINUOUS POWER BOOM ELEVATION 10' - 20' BOOM w/ POWER EXTENSION 1250 LB CAPACITY @ 20', 0 DEGREES 80 FT OF 5/16"" WIRE ROPE w/ SAFETY HOOK RADIO REMOTE CONTROL w/ OBD SYSTEM & 25 FT PLUG IN REMOTE CONTROL PENDANT	27,095.0000	27,095.00
	****QUOTE VALID FOR 30 DAYS****		

Continued

SALES ORDER # 0424498

ROYAL TRUCK BODY

4242 FORCUM AVENUE
STE# 400
MCCLELLAN, CA 95652
PHONE: 916-921-2639
FAX: 866-346-6103

QUOTATION 0424498

DATE ENTERED	TRUCK ORIGIN		DATE REQUESTED
8/4/2021	DLR		
WRITTEN BY	**SALESMAN**	**TERR**	**DATE PROMISED**
MH	AHJ	AHJ	9/9/9999
END USER (IF DIFFERENT THAN SOLD TO)			**TAX SCHED**
CITY OF FERNLEY			NV

CUSTOMER NO: CORFORD

SOLD
CORWIN FORD RENO
3600 KIETZKE LANE
RENO, NV 89502

SHIP
CORWIN FORD RENO
3600 KIETZKE LANE
RENO, NV 89502

CUST ORDER NO	TERMS	SHIP VIA	TRUCK ETA	CUSTOMER NAME	CUSTOMER PHONE NO
	NET 30	CPU		ANDY LUDEL	

MAKE TRUCK	YEAR	MODEL	COLOR	CA DIM	AUX TANK CONFIG	DEF TANK LOC	AXLE TYPE
Ford		F450		60			

STOCK NO.	V.I.N. NO.	BED WIDTH	COMPT DEPTH	OA WIDTH	FUEL TYPE	CAB TYPE

QTY	PART NO./DESCRIPTION	UNIT PRICE	EXT PRICE
	STREET SIDE CURB SIDE		
1	CR-BR1 ROYAL BOOM REST	566.0000	566.00
1	601710000 MANUAL PULLOUT, MANUAL CRANK DOWN OUTRIGGER PACKAGE #25100-CD	3,495.0000	3,495.00
1	602911022 DC31 12 VOLT BATTERY W/BOX 2731	1,196.0000	1,196.00
1	SPRINGPACKAGE SPRING PACKAGE	966.0000	966.00
1	H-2SC SERVICE BODY/COMBO CLASS 5 RECEIVER HITCH (2-1/2" RECEIVER TUBE) AND HITCH INSERT, 16,000 LBS GTW	533.0000	533.00
	****QUOTE VALID FOR 30 DAYS****		Continued

SALES ORDER # 0424498

ROYAL TRUCK BODY

4242 FORCUM AVENUE
STE# 400
MCCLELLAN, CA 95652
PHONE: 916-921-2639
FAX: 866-346-6103

QUOTATION 0424498

DATE ENTERED	TRUCK ORIGIN		DATE REQUESTED
8/4/2021	DLR		
WRITTEN BY	**SALESMAN**	**TERR**	**DATE PROMISED**
MH	AHJ	AHJ	9/9/9999
END USER (IF DIFFERENT THAN SOLD TO)			**TAX SCHED**
CITY OF FERNLEY			NV

CUSTOMER NO: CORFORD

SOLD
CORWIN FORD RENO
3600 KIETZKE LANE
RENO, NV 89502

SHIP
CORWIN FORD RENO
3600 KIETZKE LANE
RENO, NV 89502

CUST ORDER NO	TERMS	SHIP VIA	TRUCK ETA	CUSTOMER NAME	CUSTOMER PHONE NO
	NET 30	CPU		ANDY LUDEL	

MAKE TRUCK	YEAR	MODEL	COLOR	CA DIM	AUX TANK CONFIG	DEF TANK LOC	AXLE TYPE
Ford		F450		60			

STOCK NO.	V.I.N. NO.	BED WIDTH	COMPT DEPTH	OA WIDTH	FUEL TYPE	CAB TYPE

QTY	PART NO./DESCRIPTION	UNIT PRICE	EXT PRICE
	STREET SIDE ____ CURB SIDE ____		
1	H-4 7 BLADE/ 4 PIN TRAILER CONNECTOR	201.0000	201.00
1	MK108FDD FORD DIESEL MOUNTING KIT 108 DUAL	0.0000	0.00

****QUOTE VALID FOR 30 DAYS****

THANK YOU FOR CHOOSING ROYAL TRUCK BODY!!!

Freight:	395.00
Net Order:	47,242.00
Sales Tax NEVADA:	0.00
GRAND TOTAL:	47,637.00

RECEIVED BY (PRINT NAME) _____

RECEIVED BY (SIGN) _____ DATE _____

In Consideration of allowing you to remove your vehicle from our premises prior to full payment of the underlying work order, the undersigned as authorized agent for SALES ORDER # 0424498, hereby agrees that if any litigation arises out of this transaction the prevailing party shall be entitled to reimbursement for court costs and attorney's fees.

2022 SUPER DUTY® CHASSIS CAB (F-350CC / F-450CC / F-550 / F-600)

MAJOR PRODUCT CHANGES

OVERVIEW

The 2022 Super Duty® Chassis Cab reinforces the long tradition of F-Series toughness and continues to meet the needs of a multitude of commercial vocations, as well as personal use towing customers. Trademark "Built Ford Tough®" attributes such as capability to get the job done, quality, reliability, power, breadth and depth of product choices are solidly behind Chassis Cab users.

To learn more about the features on this vehicle, go to www.fordesourcebook.com

MODEL/SERIES/AVAILABILITY

- XL, XLT, Lariat

MECHANICAL

★ ***New/Changed***
- — None

● ***Deleted***
- — None

EXTERIOR

★ ***New/Changed***
- — None

● ***Deleted***
- — Manual telescoping, Folding Trailer Tow Mirrors with Power/Heated Glass, Heated Convex Spotter Mirror (546)

★ ***New Colors***
- — Atlas Blue (B3)

● ***Deleted Colors***
- — Lithium Gray
- — Velocity Blue

INTERIOR/COMFORT

★ ***New/Changed***
- — Baja Interior – Lariat only
- — Black Onyx Interior – Lariat
- — Center armrest storage with 40/20/40 split bench front seat – XL

● ***Deleted***
- — Interior Seat – Camel – XLT

SAFETY/SECURITY

★ ***New/Changed***
- — None

● ***Deleted***
- — Underhood Service Light

FORD CO-PILOT360™ TECHNOLOGY

★ ***New/Changed***
- — None

FUNCTIONAL

★ ***New/Changed***
- — SYNC® 4 – standard on Lariat
- — SiriusXM® with 360L – standard on Lariat

PACKAGES

★ ***New/Changed***
- — 360-Degree Dual Beacon LED Warning Strobes replaced the 4-Corner LED Warning Strobes (91S/91G)
- — Revised frame bridging reinforcements will come standard on all variants of F-450, F-550 and F-600 chassis cabs, therefore the Aerial Lift / Severe Duty Prep Pkg (76X) is discontinued

● ***Deleted***
- — Aerial Lift / Severe Duty Prep Package (76X)

Product Changes and Features Availability

Features, options and package content subject to change. Please check www.fmcdealer.com for the most current information.

★ = New for this model year

2022 SUPER DUTY® CHASSIS CAB (F-350CC / F-450CC / F-550 / F-600)
MAJOR PRODUCT SUMMARY

The all-new 2022 F-SUPER DUTY® reinforces the tough image of the F-Series and continues to meet the needs of both commercial and personal use towing customers.

The following equipment is standard as indicated. Each series includes the standard equipment of the previous series, except where otherwise noted:

XL

MECHANICAL
- Brakes – Four-wheel Disc Brakes; Anti-lock Brake System (ABS)
- Electronic-Shift-On-the-Fly (ESOF) (4x4 only)
- Engine
  - 6.2L 2 Valve Gas SOHC EFI NA V8 (Flex-Fuel) (F-350)
  - 7.3L 2V DEVCT NA PFI V8 Gas (F-450/F-550/F-600)
- Transmission – Ten-Speed Automatic Transmission with Neutral Idle and Selectable Drive Modes: Normal, Tow/Haul, Eco, Deep Sand/Snow & Slippery

EXTERIOR
- Bumper – front, black painted
- Fender vents – front
- Fuel Tank
  - 26.5 gallon mid ship (F-350 SRW)
  - 40 gallon aft axle (F-350 DRW/F-450/F-550/F-600)
- Glass – solar-tinted
- Grille – black painted
- Scuff plates – front, color-coordinated
- Splash Guards/Mud Flaps – Front (F-450/550/F-600 only)
- "Three Blink" Lane change signal
- Tow hooks – front (2)
- Trailer wiring – 7 wire harness w/relays, blunt cut & labeled
- Wheels
  - F-350 SRW – 18" Argent Painted Steel wheel w/Painted Hub Cover/Center Ornaments
  - F-350 DRW – 17" Argent Painted Steel (hub covers/center ornaments not included)
  - F-450, F-550 & F-600 – 19.5" Argent Painted Steel
  - Manual Locking Hubs (4x4)
- Windshield Wipers – intermittent

INTERIOR/COMFORT
- 2.3" Productivity Screen in IP Cluster Instrumentation Center – Multi-function switch message center display with Ice Blue® Lighting
- 12V Powerpoint, auxiliary
- Air conditioning – single-zone, manual
- Air conditioning vents – black w/chrome ring and knob
- Cabin Air Particulate Filter
- Door-trim – armrest/grab handle and reflector
- Floor covering – black, full length vinyl
- Mirror – rearview 11.5" day/night
- Outside Temperature Display
- Seat – Front, HD vinyl, 40/20/40 split bench w/center armrest, cupholder and storage (manual lumbar – driver's side)
- Steering – power
- Steering wheel – black urethane with tilt and telescoping steering wheel/column; includes three (3) button message control
- Sun visors – color-coordinated vinyl, driver w/pocket, passenger w/uncovered mirror insert with 6 inch overhead
- Upfitter switches – 6 located in Overhead Console
- Window – Rear, fixed

SAFETY/SECURITY
- AdvanceTrac® with RSC® (Roll Stability Control™)
- Belt-Minder® (front safety belt reminder)
- Driver and passenger frontal airbag; passenger side deactivation switch
- Headlamps – Quad beam jewel effect halogen
- Lamps – Roof marker/clearance – LED
- Mirrors – manually telescoping two-way fold trailer tow with manual glass
- Safety Belts – w/height adjustment (front-outboard seating positions only)
- Safety Canopy® System (incl. side-curtain airbags)
- Stationary Elevated Idle Control (SEIC)
- SOS Post-Crash Alert System™

FORD CO-PILOT360™ TECHNOLOGY
- AutoLamp – Auto On/Off Headlamps

FUNCTIONAL
- Alternators:
  - 6.2L 2 Valve Gas – 200 AMP
  - 7.3L 2 Valve Gas – 240 AMP
  - 6.7L 4 Valve OHV Power Stroke® V8 Turbo Diesel – 220 AMP
- Audio – AM/FM stereo (four (4) speakers)
- FordPass™ Connect 4G Wi-Fi Modem
  - 4G LTE Wi-Fi hotspot connects up to 10 devices[1]
  - Remotely start, lock and unlock vehicle[2]
  - Schedule specific times to remotely start vehicle[2]
  - Locate parked vehicle[2]
  - Check vehicle status[2]

  Note: *Ford Telematics™ and Data Services Prep included for Fleet Only: FordPass™ Connect 4G Wi-Fi Modem provides data to support telematics and data services including but not limited to vehicle location, speed, idle time, fuel, vehicle diagnostics and maintenance alerts. Device enables telematics services through Ford or authorized providers. Activate at www.fleet.ford.com or call 833-FCS-FORD or 833-327-3673.*
- Stabilizer bars – front & rear
- SYNC®
  - Enhanced Voice Recognition Communication and Entertainment
  - 911 Assist®
  - 4.2" LCD Center Stack screen
  - AppLink®
  - Smart-Charging USB port – one (1)

XLT

All XL content, plus:

EXTERIOR
- Bumper – front, chrome
- Grille – two (2) bar, bright chrome
- Wheels – F-350 SRW – 18" Argent Painted Steel Wheel w/Painted Hub Cover/Center Ornaments

INTERIOR/COMFORT
- 4.2" LCD Productivity Screen in IP Cluster w/Compass display
- 110V/400W Outlet dash mounted
- Auxiliary audio input jack
- Door-trim – soft armrest, grab handle, power window/lock switches and reflector; front map pockets on Regular Cab and SuperCab; front and rear map pockets on Crew Cab
- Floor covering – color-coordinated full carpet
- Floor mats – color-coordinated carpet
- Power Equipment Group – 1st row (front-seat) windows w/one-touch up/down, power 2nd row (rear-seat) windows (Super/Crew Cab); power/door-locks w/backlit switches & accessory delay
- Seats, Front
  - Front, high-series cloth 40/20/40 split bench – 20% center under-seat storage, w/center armrest, cupholder and storage
  - Two-way adjustable driver/passenger headrests
- Sun visors – Color-coordinated cloth, both driver and passenger w/covered mirrors
- Window – rear, fixed privacy glass

SAFETY/SECURITY
- Advanced Security Pack
- Mirrors – manually telescoping/folding trailer tow with power/heated glass, heated convex spotter mirror, integrated clearance lamps/turn signals
- MyKey® owner controls feature
- Remote keyless entry
- SecuriLock® Passive Anti-Theft System (PATS)

FORD CO-PILOT360™ TECHNOLOGY
- Cruise control (steering wheel-mounted)

FUNCTIONAL
- Audio – AM/FM stereo MP3 player & five (5) speakers w/Reg Cab, seven (7) speakers w/Super/Crew Cabs
- SiriusXM® Radio[3]

  Note: Includes a three (3)-month prepaid subscription. Service is not available in Alaska or Hawaii.
- SYNC® 3
  - Enhanced Voice Recognition Communications and Entertainment System
  - 8" LCD Capacitive Touchscreen in Center Stack with Swipe Capability
  - Pinch-to-Zoom capability included with available Voice-Activated Touchscreen Navigation System
  - AppLink®
  - 911 Assist®
  - Apple CarPlay™ and Android Auto™
  - Smart Charging USB Ports – two (2)

  Note: SYNC® AppLink® lets you control some of your favorite compatible mobile apps with your voice. It is compatible with select smartphone platforms. Commands may vary by phone and AppLink® softwares
- Trailer Brake Controller

LARIAT

All XLT content, plus:

EXTERIOR
- Fog lamps
- Grille – two (2) bar, chrome (includes additional chrome inserts)
- Handles – door, body-color
- Wheels
  - F-350 SRW – 18" Bright Machined Cast Aluminum w/Magnetic Painted Pockets and Bright Hub Covers/Center Ornaments
  - F-350 DRW – 17" Forged Polished Aluminum w/bright hub covers/center ornaments
  - F-450/F-550 – 19.5" Forged Polished Aluminum w/bright hub covers/center ornaments

INTERIOR/COMFORT
- 110V/400W outlets; one (1) dash mounted and one (1) in rear console
- Air conditioning – Dual-Zone Electronic Automatic Temperature Control (DEATC)
- Air conditioning vents – painted obsidian with chrome ring
- Instrumentation Center – 8" LCD Productivity Screen with steering wheel-mounted five (5) button control: includes compass and menus for Gauge Setup, Trip Computer, Fuel Economy and Towing/Off-Road applications
- Mirror – rearview, electrochromic self-dimming
- Power-Adjustable Pedals
- Seats, Front
  - Leather seating surfaces, 40/Console/40
  - 10-way power driver & 8-way front-passenger seats (six-way power-adjustable track, two-way power recline and two-way power lumbar)
- Seats, Rear
  - Armrest with cupholders (Crew Cab)
  - Rear under-seat storage (SuperCab); floor fold-flat and locking (Crew Cab)
- Steering wheel – leather-wrapped, color-coordinated
- Sun visors – color-coordinated cloth; both driver and passenger w/covered illuminated visor vanity mirrors
- Window – rear, power-sliding with privacy glass and defrost

SAFETY/SECURITY
- Autolock, Auto unlock
- Mirrors – Power-folding with Autofold, PowerScope® Telescoping, Power Glass Trailer Tow Mirrors with Heat, Turn Signal, High-Intensity LED Security Approach Lamps, Utility Lighting System (LED Side-mirror Spotlights and body-color skull caps)
- SecuriCode™ keyless entry keypad

FUNCTIONAL
- Alternators:
  - 6.2L 2 Valve Gas – 240 AMP
  - 7.3L 2V DEVCT NA PFI V8 Gas (F-450/F-550) – 397 AMP
- Audio – B&O Sound System by Bang & Olufsen – (10) speakers including subwoofer
- SiriusXM® with 360L[4] ★

  Note: Includes a three (3)-month prepaid subscription. Service is not available in Alaska and Hawaii
- SYNC® 4 with Enhanced Voice Recognition
  - 12" LCD Capacitive Touchscreen with Swipe Capability
  - Information On Demand Panel
  - Wireless Phone Connection
  - Cloud Connected
  - AppLink® w/ App Catalog
  - 911 Assist
  - Apple CarPlay® and Android Auto™ Compatibility
  - Digital Owner's Manual
  - Conversational Voice Command Recognition
  - Connected Navigation[5]

Please see Standard Equipment pages for more details.

[1] Includes a complimentary trial subscription of 3 months or 3 gigabytes – whichever comes first, Wireless Service Plan required after trial subscription ends. Visit att.com/ford to start complimentary trial and sign up for a Wireless Service Plan

[2] Includes Service for one year from the vehicle sale date as recorded by the dealer

[3] Subscriptions to all SiriusXM® services are sold by SiriusXM after trial period. If you decide to continue service after your trial, the subscription plan you choose will automatically renew thereafter and you will be charged according to your chosen payment method at then-current rates. Fees and taxes apply. To cancel you must call SiriusXM at 1-866-635-2349. See SiriusXM Customer Agreement for complete terms at www.siriusxm.com. All fees and programming subject to change. Sirius, XM and all related marks and logos are trademarks of SiriusXM Radio Inc

[4] SiriusXM audio and data services each require a subscription sold separately, or as a package, by Sirius XM Radio Inc. Your SiriusXM service will automatically stop at the end of your trial unless you decide to subscribe. If you decide to continue service after your trial, the subscription plan you choose will automatically renew thereafter and you will be charged according to your chosen payment method at then- current rates. Fees and taxes apply. To cancel you must call SiriusXM at 1-866-635-2349. See SiriusXM Customer Agreement for complete terms at www.siriusxm.com. All fees and programming subject to change. Not all vehicles or devices are capable of receiving all services offered by SiriusXM. Current information and features may not be available in all locations, or on all receivers. Satellite and streaming lineups vary slightly. © 2020 Sirius XM Radio Inc. Sirius, XM, SiriusXM and all related marks and logos are trademarks of Sirius XM Radio Inc

[5] Navigation services require SYNC®4 and FordPass Connect (optional on select vehicles), complimentary connect service and the FordPass app (see FordPass Terms for details). Customer receives a complimentary 90-day trial of navigation services when an eligible vehicle is added to a member's FordPass account. Trial period begins on the new vehicle warranty start date. At the end of the complimentary period, navigation service will terminate. Connected service and features depend on compatible AT&T network availability. Evolving technology/cellular networks/vehicle capability may limit functionality and prevent operation of connected features. FordPass App, compatible with select smartphone platforms, is available via a download. Message and data rates may apply. Ford Telematics™ and Ford Data Services™, subscription services available only for fleet customers, provide access to manufacturer-grade data including but not limited to vehicle location, speed, idle time, fuel, vehicle diagnostics, and maintenance alerts. Ford Telematics Drive mobile app for drivers is also available for Ford Telematics subscribers. FordPass Connect™ 4G Wi-Fi Modem enables Ford Telematics service directly from Ford or Ford Data Services through authorized providers. Learn more at commercialsolutions.ford.com or activate by calling 833-FCS-Ford. (833-327-3673).

Product Features Availability

Features, options and package content subject to change.

★ = New for this model year

STANDARD EQUIPMENT

The following features are standard on every 2022 SUPER DUTY® Chassis Cab vehicle:

MECHANICAL
- Brakes – Four-wheel Disc Brakes with Anti-Lock Brake System (ABS)

EXTERIOR
- Doors
  - Two (Regular Cab only)
  - Four (SuperCab/Crew Cab only)
- Fuel Tank
  - 26.5 gallon mid ship (F-350 SRW)
  - 40 gallon aft axle (F-350 DRW/F-450/F-550/F-600)
  - Diesel Exhaust Fluid (DEF) Tank Location:
    - Aft-of-axle fuel tank is paired with the DEF tank located in the mid ship location, between the frame rails.
    - Mid ship fuel tank is paired with the DEF tank located outside of the frame rail
    - Dual tanks are paired with the DEF tank located outside of the frame rail
- Glass
  - Solar-tinted complete (Std. on XL)
  - Privacy (Std. on XLT and Lariat; NA front-seat windows)
- Manual Locking Hubs (4x4)
- Scuff plates – front, color-coordinated
- "Three-Blink" lane change signal
- Tow hooks – front, (two) (2)
- Trailer wiring – 7 wire harness w/relays, blunt cut and labeled
- Windshield wipers – intermittent

INTERIOR/COMFORT
- Convenience
  - Coat hooks, LH/RH color-coordinated
  - Dash top tray
  - Dome lamp – LH/RH door activated & I/P switch operated w/delay
  - Handles, grab – driver & front-passenger
  - Handles, roof ride – front-passenger (also over rear-doors on Crew Cab)
  - Map lights – dual (front and rear w/Crew Cab)
  - 12V Powerpoint, auxiliary
- Door-trim – color-coordinated molded w/grab handle & reflector
- Gauges and Meters – Fuel, Transmission Temperature, Engine Coolant Temperature, Oil Pressure (Gas engine) and Turbo (Diesel engine) Gauges; Speedometer, Odometer and Tachometer
- Headliner – color-coordinated cloth
- Instrument panel – color-coordinated w/ glove box, four (4) air registers w/positive shut-off and powerpoint

INTERIOR/COMFORT (continued)
- Instrumentation Center
  - 2.3" LCD Productivity Screen in IP Cluster (standard on XL)
  - 4.2" LCD Productivity Screen in IP Cluster (standard on XLT)
  - 8.0" LCD Productivity Screen in IP Cluster (Standard on Lariat)
- Overhead Console with 6 Upfitter Switches
- Steering – power
- Steering damper

SAFETY/SECURITY
- AdvanceTrac® with RSC® (Roll Stability Control™)
- Airbags
  - Driver and Passenger frontal and side airbag/curtain
  - Passenger side airbag deactivation switch
- Child tethers (Regular Cab front-passenger and all rear-seating positions)
- Lamps – LED Roof marker/clearance
- Safety Belts
  - Belt-Minder® (front safety belt reminder) – chime and flashing warning lights on I/P if belts not buckled
  - Color-coordinated safety belts w/height adjustment (front-outboard seating positions only)
- SecuriLock® Passive Anti-Theft System (PATS); includes MyKey® owner controls feature (XLT and Lariat Only)
- SOS Post-Crash Alert System™
- Stationary Elevated Idle Control (SEIC)

FUNCTIONAL
- Alternator
  - XL:
    - 6.2L 2 Valve Gas – 200 AMP
    - 7.3L 2 Valve Gas – 240 AMP
    - 6.7L 4 Valve Diesel – 240 AMP
  - XLT:
    - 6.2L 2 Valve Gas – 240 AMP
    - 7.3L 2 Valve Gas – 397 AMP Dual
    - 6.7L 4 Valve Diesel – 332 AMP Dual
  - Lariat:
    - 6.2L 2 Valve Gas – 240 AMP
    - 7.3L 2 Valve Gas (F-450/F-550) – 397 AMP Dual
    - 6.7L 4 Valve Diesel – 332 AMP Dual
- Hood release
- Horn – dual electric
- Intelligent Oil-Life Monitor® (6.7L Power Stroke® Diesel engine)
- Oil minder system (6.2L Gas engine)
- Shock absorbers – heavy-duty gas
- Springs, rear auxiliary
- Stabilizer bar – front and rear

The following features are standard on selected 2022MY SUPER DUTY® Chassis Cab vehicles:

MECHANICAL	XL	XLT	LARIAT
Engine			
6.2L 2 Valve Gas SOHC EFI NA V8 (Flex-Fuel) (F-350)	●	●	●
7.3L 2V DEVCT NA PFI V8 Gas (F-450/F-550/F-600)	●	●	●
Transmission			
Ten-Speed 10R140 with Neutral Idle Automatic Transmission with Selectable Drive Modes: Normal, Tow/Haul, Eco, Deep Sand/Snow & Slippery	●	●	●
Base Alternator			
200 Amp (F-350 Std. on 6.2L Gas Engine)	●		
240 Amp (F-450/F-550/F-600 Std. on 7.3L Gas Engine)	●		
240 Amp (F-450/F-550 Std. on 6.7L Diesel Engine)	●		
240 Amp (F-350 Std. on 6.2L Gas Engine)		●	●
332 Amp Dual (F-450/F-550 Std. on 6.7L Diesel)		●	●
397 Amp (F-450/F-550 Std. on 7.3L Engine)		●	●
Axle			
Monobeam front axle w/coil spring suspension (F-350 4x4, F-450, F-550 and F-600)	●	●	●
Independent Twin-I-beam front axle w/coil spring suspension (F-350 4x2)	●	●	●

★ = New for this model year
● = Available

1 = Regular Cab only, 2 = SuperCab only, 3 = Crew Cab only

STANDARD EQUIPMENT

MECHANICAL (continued)	XL	XLT	LARIAT
Battery			
650 CCA, 72 AH (6.2L Gas engine only) (F-350 XL SRW/DRW)	●		
750 CCA, 78 AH Single (6.2L Gas F-350 SRW/DRW XLT & Lariat)		●	●
750 CCA, 78 AH Single (7.3L Gas F-450, F-550, F-600 XL & XLT)		●	●
750 CCA, 78 AH, Dual (7.3L Gas F-450 and F-550 Lariat)			●
Fuel Tanks			
26.5 gallon mid ship (F-350 SRW w/68D Payload Downgrade Pkg)	●	●	●
40 gallon aft axle (F-350 SRW/F-350 DRW/F-450/F-550/F-600; NA with 68D Payload Downgrade Pkg. on F-350 SRW)	●	●	●
KEY EXTERIOR FEATURES			
Bumper – Front			
Black painted steel w/grained MIC top cover and black lower air dam	●		
Chrome w/grained MIC top cover and black lower air dam		●	●
Grille			
Black MIC	●		
Bright Chrome – two (2) bar		●	
Chrome – two (2) bar (includes additional chrome inserts)			●
Handles – Door and Tailgate			
Black	●	●	
Body-color			●
Headlamps/Taillamps/Lamps			
Quad-beam halogen jewel effect	●	●	●
Center High-Mounted Stop Lamp (CHMSL) (Standard on vehicles 10k GVWR and below)	●	●	●
Fog lamps			●
LED Roof Marker/Clearance Lamps	●	●	●
Utility Lighting System (LED Side-mirror Spotlights) (see mirror descriptions below)			●
Mirrors			
Manually telescoping/folding trailer tow with manual glass	●		
Manually telescoping/folding trailer tow with power/heated glass, heated convex spotter mirror, Integrated Clearance Lamps/Turn Signals		●	
Power-folding with Autofold, PowerScope® Telescoping, Power Glass Trailer Tow Mirrors with Heat, Turn Signal, High-Intensity LED Security Approach Lamps, Utility Lighting System (LED Side-mirror Spotlights)			●
Wheels (SRW)			
18" Argent Painted Steel w/painted hub covers/center ornaments (F-350)	●		
18" Sparkle Silver Painted Cast Aluminum w/bright hub covers/center ornaments (F-350)		●	
18" Bright Machined Cast Aluminum w/Magnetic Painted Pockets and bright hub covers/center ornaments (F-350)			●
Wheels (DRW)			
17" Argent Painted Steel (hub covers/center ornaments not included (F-350)	●	●	
17" Forged Polished Aluminum w/bright hub covers/center ornaments (F-350)			●
19.5" Argent Painted Steel (F-450/F-550/F-600)	●	●	
19.5" Forged Polished Aluminum w/bright hub covers/center ornaments (F-450/F-550)			●
Windows and Glass			
1st Row (front-seat) – Manual	●		
1st Row (front-seat) – Power w/one-touch up/down		●	●
2nd Row (rear-seat) – Fixed	●(2)		
2nd Row (rear-seat) – Power		●(2,3)	●(2,3)
Rear (backlight) – Fixed	●	●	
Rear (backlight) – Power-sliding w/defrost			●
Solar-tinted glass (complete)	●		
Privacy glass, (rear backlight on all cabs; 2nd Row (rear-seat) windows on SuperCab and Crew Cab. Other glass is solar-tinted.)		●	●
KEY INTERIOR/COMFORT FEATURES			
Air Conditioning			
Manual, Single Zone	●	●	
Dual-Zone Electronic Automatic Temperature Control (DEATC)			●

★ = New for this model year
● = Available

1 = Regular Cab only, 2 = SuperCab only, 3 = Crew Cab only

STANDARD EQUIPMENT

KEY INTERIOR/COMFORT FEATURES (continued)	XL	XLT	LARIAT
Audio			
AM/FM stereo MP3 Player(speakers; four (4) w/ Regular Cab, six (6) w/ SuperCab and Crew Cab)	•		
AM/FM stereo MP3 player (speakers; five (5) with Regular Cab, seven (7) with SuperCab and Crew Cab)		•	
SiriusXM® Radio[1] (speakers; adds one (1) I/P mounted center speaker on XLT only) **Note:** Includes a three (3)-month prepaid subscription. Service is not available in Alaska and Hawaii.		•	
★SiriusXM® with 360L Radio[2] **Note:** Includes a three (3)-month prepaid subscription. Service is not available in Alaska and Hawaii.			•
B&O Sound System by Bang & Olufsen (ten (10) speakers including subwoofer)			•
SYNC® – Enhanced Voice Recognition Communications and Entertainment System – 911 Assist® – 4.2 LCD Center Stack screen – AppLink® – Smart-Charging USB port – one (1)	•		
SYNC® 3 – Enhanced Voice Recognition Communications and Entertainment System – 8" LCD Capacitive Touchscreen in Center Stack with Swipe Capability – Pinch-to-Zoom capability included with available Voice-Activated Touchscreen Navigation System – AppLink® – 911 Assist® – Apple CarPlay™ and Android auto™ – Smart-Charging USB Ports – two (2) **Note:** SYNC® Applink® lets you control some of your favorite compatible mobile apps with your voice. It is compatible with select smartphone platforms. Commands may vary by phone and AppLink® software.		•	
★SYNC® 4 with Enhanced Voice Recognition – 12" LCD Capacitive Touchscreen with Swipe Capability – Information On Demand Panel – Wireless Phone Connection – Cloud Connected – AppLink w/ App Catalog – 911 Assist® – Apple CarPlay® and Android Auto™ Compatibility – Digital Owner's Manual – Conversational Voice Command Recognition – Connected Navigation[3]			•
KEY INTERIOR/COMFORT FEATURES (continued)	**XL**	**XLT**	**LARIAT**

[1] Subscriptions to all SiriusXM® services are sold by SiriusXM after trial period. If you decide to continue service after your trial, the subscription plan you choose will automatically renew thereafter and you will be charged according to your chosen payment method at then-current rates. Fees and taxes apply. To cancel you must call SiriusXM at 1-866-635-2349. See SiriusXM Customer Agreement for complete terms at www.siriusxm.com. All fees and programming subject to change. Sirius, XM and all related marks and logos are trademarks of Sirius XM Radio Inc.

[2] SiriusXM audio and data services each require a subscription sold separately, or as a package, by Sirius XM Radio Inc. Your SiriusXM service will automatically stop at the end of your trial unless you decide to subscribe. If you decide to continue service after your trial, the subscription plan you choose will automatically renew thereafter and you will be charged according to your chosen payment method at then current rates. Fees and taxes apply. To cancel you must call SiriusXM at 1-866-635-2349. See SiriusXM Customer Agreement for complete terms at www.siriusxm.com. All fees and programming subject to change. Not all vehicles or devices are capable of receiving all services offered by SiriusXM. Current information and features may not be available in all locations, or on all receivers. Satellite and streaming lineups vary slightly. © 2020 Sirius XM Radio Inc. Sirius, XM, SiriusXM and all related marks and logos are trademarks of Sirius XM Radio Inc

[3] Navigation services require SYNC®4 and FordPass Connect (optional on select vehicles), complimentary connect service and the FordPass app (see FordPass Terms for details). Customer receives a complimentary 90-day trial of navigation services when an eligible vehicle is added to a member's FordPass account. Trial period begins on the new vehicle warranty start date. At the end of the complimentary period, navigation service will terminate.
Connected service and features depend on compatible AT&T network availability. Evolving technology/cellular networks/vehicle capability may limit functionality and prevent operation of connected features.
FordPass App, compatible with select smartphone platforms, is available via a download. Message and data rates may apply. Ford Telematics™ and Ford Data Services™, subscription services available only for fleet customers, provide access to manufacturer-grade data including but not limited to vehicle location, speed, idle time, fuel, vehicle diagnostics, and maintenance alerts. Ford Telematics Drive mobile app for drivers is also available for Ford Telematics subscribers. FordPass Connect™ 4G Wi-Fi Modem enables Ford Telematics service directly from Ford or Ford Data Services through authorized providers. Learn more at commercialsolutions.ford.com or activate by calling 833-FCS-Ford. (833-327-3673).

★ = New for this model year
● = Available

1 = Regular Cab only, 2 = SuperCab only, 3 = Crew Cab only

STANDARD EQUIPMENT

FordPass™ Connect 4G – Wi-Fi Modem – Wi-Fi® hotspot connects up to 10 devices[4] – Remotely start, lock and unlock vehicle[5] – Schedule specific times to remotely start vehicle[5] – Locate parked vehicle[5] – Check vehicle status[5] **Note:** *Ford Telematics™ and Data Services Prep included for Fleet Only: FordPass™ Connect 4G Wi-Fi Modem provides data to support telematics and data services including but not limited to vehicle location, speed, idle time, fuel, vehicle diagnositics and maintenance alerts. Device enables telematics services through Ford or authorized providers. Activate at www.fleet.ford.com or call 833-FCS-FORD or 833-327-3673.*	●	●	●
Cupholders			
Dual, instrument panel-mounted	●	●	●
Integrated w/armrest on rear-seat			●(3)
Door-Trim			
Armrest, grab handle and reflector	●		
Soft armrest, grab handle, power window/lock switches and reflector; front map pockets on Regular Cab and SuperCab; front and rear map pockets on Crew Cab		●	●
Floor Covering			
Black vinyl	●		
Color-coordinated carpet and carpeted floor mats (includes rear mats on SuperCab & Crew Cab) (deleted when all-weather floor mats are ordered)		●	●
Instrumentation Center			
2.3" Productivity Screen display includes menus for Multi-function switch message center w/Ice Blue® Lighting (three (3) button message control on steering wheel)	●		
4.2 Productivity Screen display includes menus for Gauge Setup, Trip Computer, Fuel Economy and Towing/Off-Road applications five (5) button message control on steering wheel (included with the SYNC® and SYNC® Services)		●	
8.0" Productivity Screen display includes menus for Gauge Setup, Trip Computer, Fuel Economy and Towing/Off-Road applications; five (5) button message control on steering wheel (included with the SYNC® and SYNC® Services)			●
Manual door-locks and windows	●		
Overhead Console – with dual storage bin and map lights	●	●	●
Power Equipment			
Accessory delay		●	●
Door-locks w/backlit switches		●	●
Windows w/backlit switches		●	●
Powerpoint and 110V/400W Outlet			
One (1) Powerpoint in front center under-seat storage		●	
Two (2) Powerpoints in instrumentation center	●	●	●
Two (2) Powerpoints in rear side of Flow-through Console			●
110V/400W Outlet dash mounted		●	●
110V/150W Outlet in rear side of Flow-through Console			●
110V/150W Inverter outlet in IP		●	●
Rearview Mirror			
11.5" day/night	●	●	
Electrochromic self-dimming			●
Seats (Front)			
HD vinyl, 40/20/40 split bench w/center armrest, cupholder and storage	●		
Cloth, 40/20/40 split bench, 20% center under-seat storage, w/center armrest, cupholder and storage		●	
Leather seating surfaces, 40/Console/40			●
Manual lumbar support, driver's side	●	●	
10-way power driver & 8-way power front-passenger seats (six-way power-adjustable track, two-way power recline and two-way power lumbar)			●
Two-way adjustable driver/passenger headrests		●	●
Seats (Rear) SuperCab			
Vinyl, 60/40 fold-up bench seat	●		
Cloth, 60/40 fold-up bench seat		●	
Premium vinyl seating surfaces, 60/40 fold-up bench seat			●

[4] Includes a trial subscription of 3 months or 3 gigabytes – whichever comes first, Wireless Service Plan required after trial subscription ends
[5] Includes Service for one year from the vehicle sale date as recorded by the dealer

★ = New for this model year
● = Available

1 = Regular Cab only, 2 = SuperCab only, 3 = Crew Cab only

STANDARD EQUIPMENT

KEY INTERIOR/COMFORT FEATURES (continued)	XL	XLT	LARIAT
Seats (Rear) Crew Cab			
60/40 bench w/flip-up/fold-down w/2 outboard head restraints and a center head restraint	●		
60/40 bench w/flip-up seats & fold-down backrests, two (2) outboard head restraints and a center head restraint.		●	
60/40 bench w/flip-up seats & fold-down backrests w/under-seat partitioned lockable fold-flat storage, two (2) outboard head restraints and a center head restraint. Dual integrated cupholders in armrest			●
Vinyl	●		
Cloth		●	
Leather			●
Steering Wheel			
Urethane – Black – w/redundant audio and SYNC® controls	●	●	
Leather-Wrapped – w/redundant audio and SYNC® controls (Lariat, color-coordinated)			●
Cruise Control (steering wheel-mounted)		●	●
Manual Tilt and Telescoping steering wheel/column	●	●	●
Sun Visors			
Color-coordinated vinyl, driver w/pocket, passenger w/uncovered mirror	●		
Color-coordinated Cloth, both driver and passenger w/covered mirrors		●	
Color-coordinated Cloth; both driver and passenger w/covered illuminated visor vanity mirror			●
SAFETY/SECURITY	**XL**	**XLT**	**LARIAT**
AdvanceTrac® with RSC® (Roll Stability Control™)	●	●	●
Advanced Security Pack (incl. Inclination / Intrusion Sensors)		●	●
AutoLamp (Auto On/Off Headlamps), Rainlamp Wiper Activated Headlamps	●	●	●
Autolock, Auto unlock		●	●
Remote Keyless Entry		●	●
SecuriLock® Passive Anti-Theft System (PATS)		●	●
Trailer Sway Control and Hill Start Assist	●	●	●
Airbags			
Driver & Passenger side	●	●	●
Passenger-side deactivation switch	●	●	●

★ = New for this model year
● = Available

1 = Regular Cab only, 2 = SuperCab only, 3 = Crew Cab only

FUNCTIONAL EQUIPMENT

AXLE AVAILABILITY

			Non-Limited-Slip			Limited-Slip			Electronic-Locking	
Series	**Engine**	**Transmission**	**3.73**	**4.10**	**4.88**	**4.10**	**4.30**	**4.88**	**3.73**	**4.30**
			X37	**X41**	**X48**	**X4N**	**X4L**	**X8L**	**X3E**	**X4M**
F-350 SRW	6.2L 2V Gas SOHC EFI NA V8	TorqShift® Ten-Speed Automatic w/SelectShift® Automatic	S	—	—	—	—	—	O	O
	7.3L 2V DEVCT NA PFI V8 Gas	TorqShift® Ten-Speed Automatic w/SelectShift® Automatic	—	—	—	—	—	—	—	S
	6.7L 4V OHV Power Stroke® V8 Turbo Diesel B20	TorqShift® Ten-Speed Automatic w/SelectShift® Automatic	S	—	—	—	—	—	O	—
F-350 DRW	6.2L 2V Gas SOHC EFI NA V8	TorqShift® Ten-Speed Automatic w/SelectShift® Automatic	S	—	—	—	O	—	—	—
	7.3L 2V DEVCT NA PFI V8 Gas	TorqShift® Ten-Speed Automatic w/SelectShift® Automatic	S	—	—	—	O	—	—	—
	6.7L 4V OHV Power Stroke® V8 Turbo Diesel B20	TorqShift® Ten-Speed Automatic w/SelectShift® Automatic	S	—	—	O	—	—	—	—
F-450	6.7L 4V OHV Power Stroke® V8 Turbo Diesel B20	TorqShift® Ten-Speed Automatic w/SelectShift® Automatic	—	S	—	O	—	—	—	—
	6.7L 4V OHV Power Stroke® V8 Turbo Diesel B20	TorqShift® Ten-Speed Automatic w/SelectShift® Automatic	—	—	—	—	O[1]	—	—	—
	6.7L 4V OHV Power Stroke® V8 Turbo Diesel B20	TorqShift® Ten-Speed Automatic w/SelectShift® Automatic	—	—	—	—	S[2]	—	—	—
	7.3L 2V DEVCT NA PFI V8 Gas	TorqShift® Ten-Speed Automatic w/SelectShift® Automatic	—	—	S	—	—	O	—	—
F-550	6.7L 4V OHV Power Stroke® V8 Turbo Diesel B20	TorqShift® Ten-Speed Automatic w/SelectShift® Automatic	—	S	—	O	—	—	—	—
	6.7L 4V OHV Power Stroke® V8 Turbo Diesel B20	TorqShift® Ten-Speed Automatic w/SelectShift® Automatic	—	—	—	—	—	O[3]	—	—
	6.7L 4V OHV Power Stroke® V8 Turbo Diesel B20	TorqShift® Ten-Speed Automatic w/SelectShift® Automatic	—	—	—	—	O[4]	—	—	—
	6.7L 4V OHV Power Stroke® V8 Turbo Diesel B20	TorqShift® Ten-Speed Automatic w/SelectShift® Automatic	—	—	—	—	S[5]	—	—	—
	7.3L 2V DEVCT NA PFI V8 Gas	TorqShift® Ten-Speed Automatic w/SelectShift® Automatic	—	—	S[6]	—	—	O	—	—
F-600	6.7L 4V OHV Power Stroke® V8 Turbo Diesel B20	TorqShift® Ten-Speed Automatic w/SelectShift® Automatic	—	—	—	—	—	S	—	—
	7.3L 2V DEVCT NA PFI V8 Gas	TorqShift® Ten-Speed Automatic w/SelectShift® Automatic	—	—	—	—	—	S	—	—

[1] Requires Trailer Tow Package – High Capacity (535)
[2] Standard when Extra Heavy Duty Front End Suspension (67P)
[3] Requires Payload Upgrade Package (68M). Also available with Trailer Tow Package – High Capacity (535) when ordered with Payload Upgrade Package (68M)
[4] Requires Trailer Tow Package – High Capacity (535) with Payload Downgrade Package (68D) or Trailer Tow Package – High Capacity (535) with Base Payload
[5] Standard when Extra Heavy Duty Front End Suspension (67P) is ordered unless 4.88 LS is already selected
[6] Not available with the Payload Upgrade Package (68U) or Payload Plus Upgrade Package (68M)

1 = Regular Cab only, 2 = SuperCab only, 3 = Crew Cab only S = Standard, O = Optional, P = Packaged Option
★ = New for this model year

FUNCTIONAL EQUIPMENT

F-350 6.2L Gas Chassis Cab Alternator Application Chart	6.2L Gas		
	XL	XLT	Lariat
Base - All Chassis Cabs Include Upfitter Switches	SC5 200A	SC7 240A	SC7 240A
Snow Plow Package	SC5 200A	SC7 240A	SC7 240A
110V Inverter (standard on XLT and Lariat)	SC7 240A	SC7 240A	SC7 240A
ONA = Option Not Available			

F-350/ F-450 / F-550 / F-600 7.3L Gas Chassis Cab Alternator Application Chart	7.3L Gas		
	XL	XLT	Lariat
Base - All Chassis Cabs Include Upfitter Switches	SC7 240A	SC2 + SC7 397A	SC2 + SC7 397A
Snow Plow Package	SC2 + SC7 397A	SC2 + SC7 397A	SC2 + SC7 397A
Dual Batteries	397	397	397
110V Inverter (standard on XLT and Lariat)	SC2 + SC7 397A	SC2 + SC7 397A	SC2 + SC7 397A
110V Inverter & Snow Plow Prep	SC2 + SC7 397A	SC2 + SC7 397A	SC2 + SC7 397A
ONA = Option Not Available			

F-350/ F-450 / F-550 / F-600 6.7L Diesel Chassis Cab Alternator Application Chart	6.7L Diesel		
	XL	XLT	Lariat
Base - All Chassis Cabs Include Upfitter Switches	SC7 240A	SC2 + SC3 332A	SC2 + SC3 332A
Snow Plow Package	SC2 + SC3 332A	SC2 + SC3 332A	SC2 + SC3 332A
110V Inverter (standard on XLT and Lariat)	SC2 + SC3 332A	SC2 + SC3 332A	SC2 + SC3 332A
110V Inverter & Snow Plow Prep	SC2 + SC3 332A	SC2 + SC3 332A	SC2 + SC3 332A
Ambulance OR Fire Prep	SC2 + SC7 397A	SC2 + SC7 397A	ONA
Rapid Heat	SC2 + SC7 397A	SC2 + SC7 397A	SC2 + SC7 397A
ONA = Option Not Available			

LEGEND:
Single SC5 - 200A
Single SC7 - 240A
Single SC7 - 67D (6.7L)
Dual SC2 and SC3 - 332A - 67A
Dual SC2 and SC7 - 397A - 67B
Option Not Available (ONA)

1 = Regular Cab only, 2 = SuperCab only, 3 = Crew Cab only
★ = New for this model year

S = Standard, O = Optional, P = Packaged Option

FUNCTIONAL EQUIPMENT

WHEEL AVAILABILITY – SRW ONLY



17” Argent Painted Steel w/painted hub cover/center ornament (Opt. on XL and XLT) – 64A



18” Argent Painted Steel w/painted hub cover/center ornament (Std. on XL F-350 SRW) – 64F



18” Sparkle Silver Painted Cast Aluminum w/bright hub cover/center ornament (Std. on XLT F-350 SRW) – 648



18” Bright Machined Cast Aluminum w/Magnetic Painted Pockets and bright hub cover/center ornament (Std. on Lariat) – 64C

WHEEL AVAILABILITY – DRW ONLY

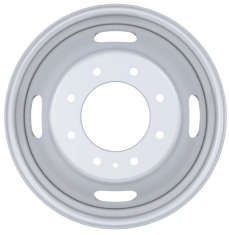

17” Argent Painted Steel (hub covers/center ornament not included) (Std. on XL and XLT F-350) – 64K



17” Forged Polished Aluminum w/bright hub cover/center ornament (Std. on Lariat F-350; Opt. on XL and XLT F-350) – 64J



19.5” Argent Painted Steel (19.5”x6.75”; std on XL and XLT F-600) – 64B

Wheel Image Coming Soon

19.5” Argent Painted Steel (19.5”x6”; hub cover/center ornament not included; Std. on XL and XLT F-450 and F-550) – 64Z



19.5” Forged Polished Aluminum w/bright hub cover/center ornament; 19.5”x6.75” (Opt. on XLT F-600) – 64M



19.5” Forged Polished Aluminum w/bright hub cover/center ornament; 19.5”x6” (Std. on Lariat F-450 and F-550; Opt. on XLT F-450 and F-550) – 64D

Wheel Image Coming Soon

17” or 19.5” Stainless Steel Wheel Covers (Front & Rear) (Opt. on XL and XLT) – 945

1 = Regular Cab only, 2 = SuperCab only, 3 = Crew Cab only
★ = New for this model year

S = Standard, O = Optional, P = Packaged Option

OPTIONAL EQUIPMENT

		XL					XLT					LARIAT			
		F-350		F-450	F-550	F-600	F-350		F-450	F-550	F-600	F-350		F-450	F-550
		SRW	DRW				SRW	DRW				SRW	DRW		
	Order Code	630A	640A	650A	660A	680A	633A	643A	653A	663A	683A	638A	648A	658A	668A
BODYSTYLE & WHEELBASE															
Regular Cab 4X2 – Cab to Axle 60”	145”	F3E	F3G	F4G	F5G	F6K	F3E	F3G	F4G	F5G	F6K	—	—	—	—
Regular Cab 4X2 – Cab to Axle 84”	169”	—	F3G	F4G	F5G	F6K	—	F3G	F4G	F5G	F6K	—	—	—	—
Regular Cab 4X2 – Cab to Axle 108”	193”	—	—	F4G	F5G	F6K	—	—	F4G	F5G	F6K	—	—	—	—
Regular Cab 4X2 – Cab to Axle 120”	205”	—	—	F4G	F5G	F6K	—	—	F4G	F5G	F6K	—	—	—	—
Regular Cab 4X4 – Cab to Axle 60”	145”	F3F	F3H	F4H	F5H	F6L	F3F	F3H	F4H	F5H	F6L	—	—	—	—
Regular Cab 4X4 – Cab to Axle 84”	169”	—	F3H	F4H	F5H	F6L	—	F3H	F4H	F5H	F6L	—	—	—	—
Regular Cab 4X4 – Cab to Axle 108”	193”	—	—	F4H	F5H	F6L	—	—	F4H	F5H	F6L	—	—	—	—
Regular Cab 4X4 – Cab to Axle 120”	205”	—	—	F4H	F5H	F6L	—	—	F4H	F5H	F6L	—	—	—	—
SuperCab 4X2 – Cab to Axle 60”	168”	X3E	X3G	X4G	X5G	—	X3E	X3G	X4G	X5G	—	X3E	X3G	X4G	X5G
SuperCab 4X2 – Cab to Axle 84”	192”	—	—	X4G	X5G	—	—	—	X4G	X5G	—	—	—	X4G	X5G
SuperCab 4X4 – Cab to Axle 60”	168”	X3F	X3H	X4H	X5H	—	X3F	X3H	X4H	X5H	—	X3F	X3H	X4H	X5H
SuperCab 4X4 – Cab to Axle 84”	192”	—	—	X4H	X5H	—	—	—	X4H	X5H	—	—	—	X4H	X5H
Crew Cab 4X2 – Cab to Axle 60”	179”	W3E	W3G	W4G	W5G	—	W3E	W3G	W4G	W5G	—	W3E	W3G	W4G	W5G
Crew Cab 4X2 – Cab to Axle 84”	203”	—	—	W4G	W5G	—	—	—	W4G	W5G	—	—	—	W4G	W5G
Crew Cab 4X4 – Cab to Axle 60”	179”	W3F	W3H	W4H	W5H	—	W3F	W3H	W4H	W5H	—	W3F	W3H	W4H	W5H
Crew Cab 4X4 – Cab to Axle 84”	203”	—	—	W4H	W5H	—	—	—	W4H	W5H	—	—	—	W4H	W5H
ENGINE/TRANSMISSION															
6.2L 2 Valve Gas SOHC EFI NA V8 (Flex Fuel)/TorqShift® Ten-Speed 10R140 with Neutral Idle Automatic with Selectable Drive Modes: Normal, Tow/Haul, Eco, Deep Sand/Snow & Slippery	996/44G	S	S	—	—	—	S	S	—	—	—	S	S	—	—
★7.3L 2V DEVCT NA PFI V8 Gas/TorqShift® Ten-Speed 10R140 with Neutral Idle Automatic with Selectable Drive Modes: Normal, Tow/Haul, Eco, Deep Sand/Snow & Slippery	99N/44G	O	O	S	S	S	O	O	S	S	S	O	O	S	S
6.7L 4 Valve OHV Power Stroke® V8 Turbo Diesel B20 with manual push-button Engine-Exhaust Braking/TorqShift® Ten-Speed 10R140 with Neutral Idle Automatic with Selectable Drive Modes: Normal, Tow/Haul, Eco, Deep Sand/Snow & Slippery w/Transmission Power Take-Off Provision	99T/44G	O	O	O	O	O	O	O	O	O	O[1]	O	O	O	O
WHEELS **4-Wheels (SRW); 6 Wheels (DRW). Spare Wheel included with Spare Tire.**															
17” Argent Painted Steel Wheel w/Painted Hub Covers/Center Ornaments (req. 6.2L Gas (996) or 6.7L Diesel (99T) and Payload Downgrade Package (68D); NA w/7.3L Gas (99N))	64A	O	—	—	—	—	O	—	—	—	—	—	—	—	—
17” Argent Painted Steel (Hub Covers/Center Ornaments not included)	64K	—	S	—	—	—	—	S	—	—	—	—	—	—	—
17” Forged Polished Aluminum w/Bright Hub Covers/Center Ornaments (4 aluminum outer and 2 steel inner)	64J	—	O	—	—	—	—	O	—	—	—	—	S	—	—
18” Argent Painted Steel w/Painted Hub Cover/Center Ornaments	64F	S	—	—	—	—	—	—	—	—	—	—	—	—	—
18” Bright Machined Cast Aluminum w/Magnetic Painted Pockets and Bright hub Covers/Center Ornaments	64C	—	—	—	—	—	—	—	—	—	—	S	—	—	—
18” Sparkle Silver Painted Cast Aluminum w/Bright Hub Covers/Center Ornaments	648	—	—	—	—	—	S	—	—	—	—	—	—	—	—
19.5” Argent Painted Steel (19.5”x 6”)	64Z	—	—	S	S	—	—	—	S	S	—	—	—	—	—
19.5” Argent Painted Steel (19.5”x 6.75”)	64B	—	—	—	—	S	—	—	—	—	S	—	—	—	—
19.5” Forged Polished Aluminum w/Bright Hub Covers/Center Ornaments (19.5” x 6”)	64D	—	—	—	—	—	—	—	O	O	—	—	—	S	S
19.5” Forged Polished Aluminum w/Bright Hub Covers/Center Ornaments (19.5” x 6.75”)	64M	—	—	—	—	—	—	—	—	—	O	—	—	—	—
TIRES **4 Tires (SRW); 6 Tires (DRW)** **Spare Tire required in Rhode Island, optional in all other states. Spare may not be the same as road tire. Ford reserves the right to shift tire manufacturers to meet production capacity demands.**															
LT245/75Rx17E BSW A/S PLU (F-350 SRW req. 6.2L Gas (996) and Payload Downgrade Package (68D))	TD8	O	S	—	—	—	O	S	—	—	—	—	S	—	—
LT245/75Rx17E BSW A/T (F-350 SRW req. 6.2L Gas (996) and Payload Downgrade Package (68D))	TBM	O	O	—	—	—	O	O	—	—	—	—	O	—	—
LT245/75Rx17E OWL A/T (DRW inner rear)	TBL	—	—	—	—	—	—	O	—	—	—	—	O	—	—
LT265/70Rx17E OWL A/T(F-350 SRW req. 6.2L Gas (996) Payload Downgrade Package (68D))	TCD	O	—	—	—	—	O	—	—	—	—	—	—	—	—

[1] F-600 w/ Diesel on Late Availability

1 = Regular Cab only, 2 = SuperCab only, 3 = Crew Cab only

□ = New for this model year

S = Standard, O = Optional, P = Packaged Option

F = Fleet Only Option

OPTIONAL EQUIPMENT

		XL					XLT					LARIAT			
		F-350		F-450	F-550	F-600	F-350		F-450	F-550	F-600	F-350		F-450	F-550
		SRW	DRW				SRW	DRW				SRW	DRW		
	Order Code	630A	640A	650A	660A	680A	633A	643A	653A	663A	683A	638A	648A	658A	668A
TIRES															
4 Tires (SRW); 6 Tires (DRW)															
Spare Tire required in Rhode Island, optional in all other states. Spare may not be the same as road tire. Ford reserves the right to shift tire manufacturers to meet production capacity demands. (continued)															
LT275/65Rx18E BSW A/S	TCH	S	—	—	—	—	S	—	—	—	—	S	—	—	—
LT275/70Rx18E BSW A/T Plus, 4X4	TDX	O	—	—	—	—	O	—	—	—	—	O	—	—	—
LT275/70Rx18E OWL A/T, 4X4	TDU	—	—	—	—	—	O	—	—	—	—	O	—	—	—
225/70Rx19.5G BSW A/P (NA w/ XLT Regular Cab 4x2)	TGJ	—	—	S	S	—	—	—	S	S	—	—	—	S	S
245/70RX19.5G BSW A/P	TD5	—	—	—	—	S	—	—	—	—	S	—	—	—	—
225/70Rx19.5G BSW A/P – 4x2 only	THB	—	—	—	—	—	—	—	S-1	S-1	—	—	—	—	—
225/70Rx19.5G BSW Traction (includes 4 traction tires on the rear and 2 A/P tires on the front.) – 4x2 only	THC	—	—	—	—	—	—	—	O-1	O-1	—	—	—	—	—
225/70Rx19.5G BSW Traction (includes 4 traction tires on the rear and 2 A/P tires on the front.; NA w/ XLT Regular Cab 4x2)	TGM	—	—	O	O	—	—	—	O	O	—	—	—	O	O
225/70Rx19.5G BSW Traction, 4X4 (includes 4 traction tires on the rear and 2 traction tires on the front. Not recommended for over the road applications; could incur irregular front tire wear and/or NVH.)	TGK	—	—	O	O	—	—	—	O	O	—	—	—	O	O
245/70RX19.5 BSW Traction (includes 6 traction tires.)	TGT	—	—	—	—	O	—	—	—	—	O	—	—	—	—
245/70Rx19.5 BSW Traction (includes 4 traction tires on the rear and 2 A/P tires on the front.)	TGU	—	—	—	—	O	—	—	—	—	O	—	—	—	—
Spare Tire, Wheel and Jack (Excludes carrier; includes Hydraulic Jack (61J); required in RI)	512	O	O	O	O	O	O	O	O	O	O	O	O	O	O
Jack (Two-ton Mechanical – F-350 SRW / Four-ton Hydraulic – F-350 DRW / Six-ton Hydraulic – F-450, F-550 & F-600) (required in RI)	61J	O	O	O	O	O	O	O	O	O	O	O	O	O	O
Spare Tire and Wheel Delete (only available to Pool Accounts for sales to RI)	51D	O	O	O	O	O	O	O	O	O	O	O	O	O	O
GROUPS/PACKAGES (see Packaged Options/Emissions pages for complete content and restrictions)															
Trailer Tow Package (NA w/F-600A)	531			O					—					—	
XL Value Package	96V			O					—					—	
Power Equipment Group	90L			O					S					S	
XLT Value Package	17V			—					O					—	
Lariat Value Package	96L			—					—					O	
Heavy-Service Front Suspension Package (NA w/F-600)	67H			O					O					O	
Extra Heavy-Service Suspension Package (NA w/F-600)	67X			O					O					O	
Extra Heavy-Duty Front End Suspension – 7500 lbs. Front GAWR – F450/F550 only; std on F-600 (requires 4.30 or 4.88 axle)	67P			O					O					O	
Payload Downgrade Package (see extended description for details) (avail. on F-350 SRW and req. Center High-Mounted Stop Lamp (CHMSL) (59H) and 26.5 mid ship fuel tank (65M); avail. On F-450 & F-550; NA w/ 7.3L (99N) or 6.7L (99T) engines on F-350 SRW)	68D			O					O					O	
16,000 GVWR Package (avail. on F-450 only)	68L			O					O					O	
Payload Upgrade Package (F-550 only w/7.3L Gas and 145” WB)	68U			O					O					—	
Payload Plus Upgrade Package (avail. on F-550 only)	68M			O					O					O	
Snow Plow Prep Package (req. 4x4 on F-350) **Note:** Reference alternator chart for required engine / alternator requirements	473			O					O					O	
Trailer Tow Package – High Capacity (avail. on F-450 & F-550 only; reqs. 6.7L Engine (99T))	535			O					O					O	
Low Deflection Package (avail. on F-450, F-550 & F-600 only (NA w/4x4 w/145”WB))	86S			O					O					O	
CNG/Propane Gaseous Engine Prep Package (req. 7.3L Gas Engine w/ F-450, F-550 or F-600)	98G			O					O					O	
CNG/Propane Gaseous Engine Prep Package (avail. on F-350 w/6.2L engine only)	98F			O					O					O	
Wrecker Package (avail. on F-450 only; req. 145” WB)	474			O-1					O-1					—	

1 = Regular Cab only, 2 = SuperCab only, 3 = Crew Cab only
□ = New for this model year

S = Standard, O = Optional, P = Packaged Option
F = Fleet Only Option

OPTIONAL EQUIPMENT

		XL					XLT					LARIAT			
		F-350		F-450	F-550	F-600	F-350		F-450	F-550	F-600	F-350		F-450	F-550
		SRW	DRW				SRW	DRW				SRW	DRW		
	Order Code	630A	640A	650A	660A	680A	633A	643A	653A	663A	683A	638A	648A	658A	668A
FUNCTIONAL															
Aft-Axle Frame Extension (req. 145" or 169" wheelbase) – F-450/F-550/F-600 only (145" Wheelbase/60" CA – 42.4" aft-of-axle frame extension increases AF dimension to 89.4") (169" Wheelbase/84" CA – 32.4" aft-of-axle frame extension increases AF dimension to 79.6")	63C	O					O					—			
Engine Block Heater	41H	O					O					O			
Skid Plates – Transfer Case (4X4 only)	41P	O					O					O			
Transmission Power Take-Off Provision (all engines include Mobile and Stationary PTO modes; 6.2L req. 4.30 final drive ratio; std on 6.7L Power Stroke® Diesel engine; std on F-600A)	62R	O					O					O			
Programmable Engine Idle Shutdown – 5 minute	86A	O					O					—			
Programmable Engine Idle Shutdown – 10 minute	86B	O					O					—			
Programmable Engine Idle Shutdown – 15 minute	86C	O					O					—			
Programmable Engine Idle Shutdown – 20 minute	86D	O					O					—			
Operator Commanded Regeneration (req. 6.7L Power Stroke® Diesel engine)	98R	O					O					—			
Dual Battery (Dual 78 AH; req. 6.2L.Gas or 7.3L Gas engine; std on XL w/ 110V/400W Outlet (43C) and 7.3L Gas engine; std on XLT and Lariat w/ 7.3L Gas engine)	86M	S/O					S/O					S/O			
Upfitter Interface Module	18A	O					O					O			
Alternators (*Refer to alternator charts on pg. 7 for futher details)															
332 Amp Alternators (req. 6.7L Power Stroke® Diesel engine; required with 110V/400W Outlet (43C) and Snow Plow Pkg. (473) when the 6.7L is ordered; NA 6.2L)	67A	S					S					S			
397 Amp Alternators (req. 6.7L Power Stroke® Diesel engine; required with Rapid-Heat Supplemental Cab Heater (41A), Ambulance (47A/47L) or Fire Truck (47J/47K); req. 7.3L Gas reqs. Dual Battery (86M) – std on Lariat, required with 110V/400W Outlet (43C) or Snowplow (473) on XL & XLT; NA 6.2L or 6.8L)	67B	S/O					S/O					S/O			
240 Amp Alternator (Opt. XL/XLT w/6.2L engine; required with 110V/400W Outlet (43C) and Snow Plow Pkg. (473) when the 6.2L is ordered; NA w/67A or 6.7L)	67E	S/O					S/O					S			
Fuel Tanks															
26.5 Gallon Mid Ship (NA w/193" WB Regular Cabs & 203.4" WB Crew Cabs equipped w/gas engines; included with F-350 SRW w/Payload Downgrade Pkg. (68D); removes 40 gallon fuel tank)	65M	O					O					O			
Dual Diesel – combines 40 gallon aft-of-axle & 26.5 gallon mid ship tank (req. DRW)	65C	O					O					—			
Trailer Towing Equipment															
Manual Telescoping, Folding Trailer Tow Mirrors with Power/Heated Glass, Heated Convex Spotter Mirror, Integrated Clearance Lamps/Turn Signals; included with Power Equipment Group (90L) on XL; reqs. Utility Lighting System (63A)	54K	P-90L					S					—			
Manual Telescoping, Folding Trailer Tow Mirrors with Power/Heated Glass, Heated Convex Spotter Mirror, Integrated Clearance Lamps/Turn Signals, 102" Width; DRW only; req. Power Equipment Group (90L) on XL; NA w/ 6.2L gas engine (996) or F-350 4x2; Utility Lighting System (63A) is std on XL and XLT)	54L	O-1					O-1					—			
Power-folding with Autofold, PowerScope® Telescoping, Power Glass Trailer Tow Mirrors with Heat, Turn Signal, High-Intensity LED Security Approach Lamps, Utility Lighting System (LED Side-mirror Spotlights)	54F	—					O					S			

1 = Regular Cab only, 2 = SuperCab only, 3 = Crew Cab only
□ = New for this model year

S = Standard, O = Optional, P = Packaged Option
F = Fleet Only Option

OPTIONAL EQUIPMENT

		XL					XLT					LARIAT			
		F-350		F-450	F-550	F-600	F-350		F-450	F-550	F-600	F-350		F-450	F-550
		SRW	DRW				SRW	DRW				SRW	DRW		
	Order Code	630A	640A	650A	660A	680A	633A	643A	653A	663A	683A	638A	648A	658A	668A
FUNCTIONAL (continued)															
Utility Lighting System (LED Side-mirror Spotlights) (req. Manual Telescoping (54K); std on XLT when ordering 54F)	63A	O					O/S					S			
Trailer Brake Controller (TBC) (Verified to be compatible with electronic actuated drum brakes only. NA w/531 Trailer Tow Pkg.; includes Smart Trailer Tow Connector)	52B	O					S					S			
Steps															
Platform Running Boards	18B	O					O					O			
KEY EXTERIOR OPTIONS															
Audible Lane Departure Warning (reqs. Pre-Collision Assist with Automatic Emergency Braking (AEB) and Forward Collision Warning)	60C	O					O					O			
Pre-Collision Assist with Automatic Emergency Braking (AEB), Automatic High Beam and Forward Collision Warning	94P	O					O					O			
Center High-Mounted Stop Lamp (CHMSL) (opt. for vehicles with GVWR over 10,000 lbs.; required with Payload Downgrade Package (68D) for vehicles with GVWR 10,000 lbs. or less)	59H	O					O					O			
Rear View Camera and Prep Kit (includes loose camera, wiring bundle); required on 10,000 GVWR and under	872	O					O					O			
FOG Lamps (reqs. XL Décor (17F) on XL)	595	O					O					S			
Rain-Sensing Windshield Wipers	60W	—					—					O			
Front License Plate Bracket **Note:** Standard in states requiring two license plates and optional to all others	153	O					O					O			
Rear-windows															
Defrost with Fixed and Privacy Glass (Privacy Glass is standard on XLT; XL req. Privacy Glass (924) and XL Power Equipment Group (90L))	43B	O					O					—			
Power-Sliding w/Defrost and Privacy Glass (XL req. 90L Power Equipment Group; 924 Privacy Glass is standard on XLT)	435/924	O-2,3					O-2,3					S			
KEY INTERIOR OPTIONS															
All weather floormats (Doesn't include carpet floormats)	16T	—					O-2,3					O-2,3			
Carpet Delete (XLT & Lariat replaced w/black flooring)	166	S					O					O			
Power-Adjustable Pedals	62M	—					O					S			
Rapid-Heat Supplemental Cab Heater (Optional in all states with 6.7L Power Stroke® Diesel engine)	41A	O					O					O			
110V/400W Outlet (with 40/20/40 seats, there is one in-dash mounted outlet; 2nd outlet in the console req. 40/Console/40 seats; req. 332 Amp Alternator (67A) when 6.7L Power Stroke® Diesel engine is ordered and 240 Amp Alternator (67E) when the 6.2L 2 Valve Gas Engine is ordered and the 397 Amp Alternators (67B) when 7.3L Gas is ordered	43C	O					S					S			
Remote Start System (req. 90L Power Equipment Group)	76S	O					O					O P-96L			
Audio															
SiriusXM® Radio[2] (Includes a three (3)-month prepaid subscription. Service is not available in Alaska and Hawaii.); adds one (1) I/P mounted center speaker on XL only	39S	O					S					—			
KEY INTERIOR OPTIONS (continued)															
Voice-activated Navigation with HD and SiriusXM Radio[2] Traffic and Travel Link® (SiriusXM Traffic and Travel Link® includes a 5-year prepaid subscription. Services are not available in Alaska and Hawaii)	21N	—					O					—			

[2] Subscriptions to all SiriusXM® services are sold by SiriusXM after trial period. If you decide to continue service after your trial, the subscription plan you choose will automatically renew thereafter and you will be charged according to your chosen payment method at then-current rates. Fees and taxes apply. To cancel you must call SiriusXM at 1-866-635-2349. See SiriusXM Customer Agreement for complete terms at www.siriusxm.com. All fees and programming subject to change. Sirius, XM and all related marks and logos are trademarks of Sirius XM Radio Inc.

1 = Regular Cab only, 2 = SuperCab only, 3 = Crew Cab only
□ = New for this model year

S = Standard, O = Optional, P = Packaged Option
F = Fleet Only Option

OPTIONAL EQUIPMENT

		XL					XLT					LARIAT			
		F-350		F-450	F-550	F-600	F-350		F-450	F-550	F-600	F-350		F-450	F-550
		SRW	DRW				SRW	DRW				SRW	DRW		
	Order Code	630A	640A	650A	660A	680A	633A	643A	653A	663A	683A	638A	648A	658A	668A
Front-Seats (See Color & Trim Availability page for additional information)															
Cloth, 40/20/40 Split Bench	1	O					—					—			
Vinyl, 40/Mini Console/40	L	O					—					—			
Cloth, 40/Mini Console/40	4	O					—					—			
Cloth, 40/Console/40	2	—					O-2,3					—			
Leather, 40/20/40 Split Bench	6	—					—					O			
Driver Heated Seat w/ Variable Temperature – req. XLT Value Pkg (17V) and Power-Sliding w/Defrost (435) or Defrost with Fixed (43B)	90A	—					O-2,3					—			
Rear-Seats															
Heated Seats (req. 40/Console/40 front-seat; req. 96L Lariat Value Pkg.)	90R	—					—					O-3			
LPO/FLEET OPTIONS (Requires Valid FIN Code) (see Packaged Options/Emissions pages for complete content and restrictions on packages)															
Ambulance Prep Package – req. 6.7 Power Stroke® Diesel Engine (99T) or 7.3L Gas	47A	F					F					—			
Ambulance Prep Package w/EPA Special Emergency Vehicle Emissions – req. 6.7 Power Stroke® Diesel Engine (99T)	47L	F					F					—			
Fire/Rescue Prep Package w/EPA Special Emissions – For Diesel Engine – req. 6.7 Power Stroke® Diesel Engine (99T)	47J	F					F					—			
Cruise Control (steering wheel-mounted)	525	F					—					—			
Daytime Running Lamps (DRL) (the non-controllable 942 Daytime Running Lamps (DRL) replace the standard Daytime Running Lamps (DRL) (On/Off Cluster Controllable)	942	F					F					—			
Speed Limitation – 65-mph governed top speed	926	F					F					—			
Speed Limitation – 75-mph governed top speed	927	F					F					—			
TPMS Delete (optional on F-350 SRW over 10,000 lbs. GVWR)	18L	F					F					F			
Bright Grille (reqs. XL Décor Group (17F))	63G	F					S					—			
XL Décor Group	17F	F					—					—			
FORD ACCESSORIES, PRE-INSTALLED															
Hood Deflector – Black Molded	87H	O					O					O			
Vehicle Safe by Console Vault (reqs. Seat-Bucket 40/console/40)	21X	—					O					O			
Exterior Backup Alarm	76C	O					O					O			
★360-Degree Dual Beacon LED Warning Strobes – Amber (req. Center High-mounted Stop Lamp (CHMSL))	91S	O					O					O			
★360-Degree Dual Beacon LED Warning Strobes – Amber-White (req. Center High-mounted Stop Lamp (CHMSL))	91G	O					O					O			
Splash Guards/Mud Flaps – Front only (optional on F-350 only)	61S	O					O					O			
Stainless Steel Wheel Covers – Front & Rear (NA F-350 SRW; req. 64K 17" Argent Painted Steel Wheel or 64Z 19.5" Argent Painted Steel Wheel)	945	O					O					—			
Wheel Well, Front	61L	O					O					O			

1 = Regular Cab only, 2 = SuperCab only, 3 = Crew Cab only
□ = New for this model year

S = Standard, O = Optional, P = Packaged Option
F = Fleet Only Option

COLOR & TRIM AVAILABILITY

		INTERIOR AND SEAT COLOR		
	INTERIOR COLOR	**Medium Earth Gray**	**Black/ Onyx**	**Baja**
XL	• HD Vinyl, 40/20/40 Split Bench w/center armrest, cupholder and storage; manual lumbar (driver's side only)	AS		
	• Cloth, 40/20/40 Split Bench w/center armrest, cupholder and storage; manual lumbar (driver's side only)	1S		
	• Vinyl, 40/Mini Console/40 manual lumbar (driver's side only)	LS		
	• Cloth, 40/Mini Console/40 manual lumbar (driver's side only)	4S		
XLT	• Cloth, 40/20/40 split bench, 20% center under-seat storage, w/center armrest, cupholder and storage, Two-way adjustable driver/passenger headrests, manual lumbar (driver's side only)	3S		
	• Cloth, 40/Console/40; Two-way adjustable driver/passenger headrests manual lumbar (driver's side only); Flow-through Console with 110V/400W outlet in rear (SuperCab & Crew Cab Only).	2S		
Lariat	• Front, leather seating surfaces, 40/Console/40; 10-way power driver and 8-way front passenger seating, Two-way adjustable driver/passenger headrests, matching 60/40 Rear Bench w/partitioned locking under-seat storage and 12V Powerpoint, Flow-through Console with 110v/150w Inverter outlet in rear.		5B	5J
	• Front, leather seating surfaces, 40/20/40 Split Bench; 10-way power driver and 8-way passenger seating, Two-way adjustable driver/passenger headrests, matching 60/40 Rear Bench w/partitioned locking under-seat storage and 12V Powerpoint		6B	6J

EXTERIOR COLOR	**MONOTONE**	**Availability**		
XL				
Agate Black Metallic	**UM**	•		
Antimatter Blue Metallic	**HX**	•		
★Atlas Blue[2]	**B3**	•		
Carbonized Gray Metallic	**M7**	•		
Iconic Silver Metallic	**JS**	•		
Oxford White	**Z1**	•		
Race Red	**PQ**	•		
Stone Gray Metallic	**D1**	•		
XLT				
Agate Black Metallic	**UM**	•		
Antimatter Blue Metallic	**HX**	•		
★Atlas Blue[2]	**B3**	•		
Carbonized Gray Metallic	**M7**	•		
Iconic Silver Metallic	**JS**	•		
Oxford White	**Z1**	•		
Race Red	**PQ**	•		
Rapid Red Metallic Tinted Clearcoat[1], [2]	**D4**	•		
Stone Gray Metallic	**D1**	•		
LARIAT				
Agate Black Metallic	**UM**		•	•
Antimatter Blue Metallic	**HX**		•	•
★Atlas Blue	**B3**		•	•
Carbonized Gray Metallic	**M7**		•	
Iconic Silver Metallic	**JS**		•	•
Oxford White	**Z1**		•	•
Race Red	**PQ**		•	•
Rapid Red Metallic Tinted Clearcoat[1]	**D4**		•	•
Star White Metallic Tri-Coat[1]	**AZ**		•	•
Stone Gray Metallic	**D1**		•	•

[1] Extra Charge Paint
[2] NA w/ ★F-600, XLT F-450/550 Regular Cab 4x2, Manual Telescoping Mirror w/102" width (54L) and Aft-Axle Frame Extension (63C)

★ = New for this model year • = Available

COLOR & TRIM AVAILABILITY

FLEET ONLY EXTERIOR COLORS – (REQUIRES VALID FIN CODE)[3]	MONOTONE	Availability		
XL				
Green[2]	**GR**	•		
Green Gem[2]	**W6**	•		
Orange[2]	**MB**	•		
School Bus Yellow	**BY**	•		
Vermillion Red[2]	**E4**	•		
Yellow[2]	**AT**	•		
XLT				
Green[2]	**GR**	•	•	
Green Gem[2]	**W6**	•	•	
Orange[2]	**MB**	•	•	
School Bus Yellow	**BY**	•	•	
Vermillion Red[2]	**E4**	•	•	
Yellow[2]	**AT**	•	•	

[3] Fleet only exterior colors will be priced as VSO colors.

★ = New for this model year

• = Available

PACKAGED OPTIONS/EMISSIONS

XL VALUE PACKAGE (96V)
Availability:
- Optional on XL

Includes:
- Bright chrome hub covers and center ornaments (F-350 SRW only)
- Chrome front bumper
- Cruise Control(steering wheel-mounted)

XL DÉCOR GROUP (17F)
Availability:
- Optional on XL (Fleet Only)

Includes:
- Bright chrome hub covers and center ornaments (F-350 SRW only)
- Chrome front bumper

Options Available:
- Chrome/Bright Grille (63G)

POWER EQUIPMENT GROUP (90L)
Availability:
- Optional on XL
- Standard on XLT and Lariat

Includes:
- Accessory Delay
- Advanced Security Pack (Incl. SecuriLock® Passive Anti-Theft System (PATS) and Inclination / Intrusion Sensors)
- Manual Telescoping, Folding Trailer Tow Mirrors with Power/Heated Glass, Heated Convex Spotter Mirror, Integrated Clearance Lamps/Turn Signals (54K) (XL & XLT Only)
- MyKey® owner controls feature
- Power 1st row (front-seat) windows w/one-touch up/down
- Power 2nd row (rear-seat) windows (Super/Crew Cab)
- Power locks
- Power-folding with Autofold, PowerScope® Telescoping, Power Glass Trailer Tow Mirrors with Heat, Turn Signal, High-Intensity LED Security Approach Lamps, Utility Lighting System (LED Side-mirror Spotlights) (54F) (Lariat only)
- Remote keyless entry
- SecuriLock® Passive Anti-Theft System (PATS) (XLT and Lariat Only)
- Upgraded door-trim panel XL

Deletes:
- Passenger side lock cylinder

Options Available:
- Power-folding with Autofold, PowerScope® Telescoping, Power Glass Trailer Tow Mirrors with Heat, Turn Signal, High-Intensity LED Security Approach Lamps, Utility Lighting System (LED Side-mirror Spotlights) (54F) (XLT only)

XLT VALUE PACKAGE (17V)
Availability:
- Optional on XLT

Includes:
- Autolock/Auto unlock
- Power Driver's Seat (eight-way)
- Rear Under Seat Storage (NA w/ Regular Cab; fixed/non-locking on SuperCab; foldable/locking on Crew Cab)
- SecuriCode™ keyless entry keypad (driver's side)

LARIAT VALUE PACKAGE (96L)
Availability:
- Optional on Lariat

Includes:
- Easy Entry/Exit Memory Driver's Seat Feature
- Power-Adjustable Pedals with Memory
- Power Heated/Ventilated Driver/Passenger Seat with Driver Side Memory
- PowerScope® Trailer Tow Mirrors with Memory
- Remote Start System

WRECKER PACKAGE (474)
Availability:
- Optional on XL and XLT F-450

Not available with:
- Heavy-Service Front Suspension Package (67H)
- Snow Plow Prep Package (473)
- Extra Heavy-Service Suspension Package (67X)
- Extra Heavy-Duty Front End Suspension – 7,500 FGAWR (67P)

Requires:
- Regular Cab
- 145" WB

Includes:
- 7K Front Springs
- 19.5K Rear Springs
- 2" Rear Spacer Block (4x2 only)

Note 1*: *May result in a deterioration of ride quality
Note 2*: *Vehicle ride height will increase w/the addition of this package

TRAILER TOW PACKAGE (531)
Availability:
- Optional on XL

Not available with:
- Ambulance Prep Packages (47A/47L) or Trailer Brake Controller (52B)
- F-600

Includes:
- Aftermarket trailer brake wiring kit
- Trailer Brake Controller not included

NOTE: Salespersons Source Book or Ford RV Trailer Towing Guide should be consulted for specific trailer towing or camper limits and corresponding required equipment, axle ratios and model availability.

TRAILER TOW PACKAGE – HIGH CAPACITY (535)
Availability:
- Optional on all F-450 and F-550

Not available with:
- Ambulance Prep Packages (47A/47L)

Requires:
- 6.7L Power Stroke® Diesel engine (99T)
- 4.30 Limited-slip rear-axle (X4L) available on F-450 (or F-550 w/Base Payload or Payload Downgrade Package (68D))
- 4.88 Limited-slip rear-axle (X8L) available on F-550 w/Payload Plus Upgrade Package (68M)

Includes:
- Trailer brake wiring kit (not included if 52B Trailer Brake Controller is ordered)
- Increase GCW on diesel engine from 32,500 lbs. to 35,000 lbs. (F-450)
- Increase GCW on diesel engine from 32,500 lbs. to 40,000 lbs. (F-550)
- Upgraded rear-axle
- Trailer brake controller not included with XL, but can be added on this package via sales code 52B

NOTE: Salesperson's Portfolio or Trailer Towing Guide should be consulted for specific trailer towing or camper limits and corresponding required equipment, axle ratios and model availability. See Supplemental Reference for vehicle height consideration.

★ = New for this model year

PACKAGED OPTIONS/EMISSIONS

SNOW PLOW PREP PACKAGE (473)

Availability:
- Optional on all Chassis Cabs

Not available with:
- Heavy-Service Front Suspension Package (67H), Extra Heavy-Service Suspension Package (67X), Ambulance Prep Packages (47A/47L) or Fire/Rescue Prep Package w/EPA Special Emissions – For Diesel Engine (47J)

Requires:
- 4x4 (F-350 only)

Includes:
- Alternator: 6.7L – 332 Amp Alternators (67A)
- Pre-selected springs (See Order Guide Supplemental Reference for springs/FGAWR of specific vehicle configurations)

Options Available: (Highly recommended for max power output)
- 397 Amp Alternators (67B) (diesel only)
- 240 Amp Alternators (67E) 6.2L Gas Engine

NOTE 1: ***Restrictions apply; see Supplemental Reference or Body Builders Layout Book for details.***
NOTE 2: ***Also allows for the attachment of a winch***
NOTE 3: ***Highly recommended to add (86M) dual battery on 6.2L and 7.3L gas engines***

HEAVY-SERVICE FRONT SUSPENSION PACKAGE (67H)

Availability:
- Optional on all Chassis Cabs

Usage:
- Recommended only on vehicles which will permanently utilize aftermarket equipment such as heavy-duty winches, brush guards or other apparatus which loads the front axle to the specified Gross Axle Weight Rating (GAWR).

Not available with:
- Ambulance Prep Packages (47A/47L), Fire/Rescue Prep Package w/EPA Special Emissions – For Diesel Engine (47J), Snow Plow Prep Package (473) or Extra Heavy-Service Suspension Package (67X)
- F-600A

Includes:
- Heavy-service front springs. (Pre-selected. See Order Guide Supplemental Reference for springs/FGAWR of specific vehicle configurations.)

NOTE 1: ***May result in a deterioration of ride quality.***
NOTE 2: ***Vehicle ride height will increase w/the addition of this package***

EXTRA HEAVY-SERVICE SUSPENSION PACKAGE (67X)

Availability:
- Optional on all Chassis Cabs

Usage:
- Recommended only on vehicles which will permanently utilize aftermarket equipment such as heavy-duty winches, brush guards or other apparatus which loads the front axle to the specified Gross Axle Weight Rating (GAWR).

Not available with:
- Ambulance Prep Packages (47A/47L), Fire/Rescue Prep Package w/EPA Special Emissions – For Diesel Engine (47J), Snow Plow Prep Package (473) or Heavy-Service Front Suspension Package (67H)
- F-600A

Includes:
- Extra heavy-service front springs (Pre-selected. See Order Guide Supplemental Reference for springs/FGAWR of specific vehicle configurations.)

NOTE 1: ***May result in a deterioration of ride quality.***
NOTE 2: ***Vehicle ride height will increase w/the addition of this package***

EXTRA HEAVY DUTY FRONT END SUSPENSION – 7500 GAWR (67P)

Availability:
- Optional on F-450 or F-550
- Standard on F-600

Usage:
- Incomplete vehicle package – req. further manufacture and certification by a final stage manufacturer

Not available with:
- Heavy-Service Front Suspension Package (67H), Extra Heavy-Service Suspension Package (67X)

Includes:
- (3) Unique Front Axle
  - — 7500 LB GAWR for 4x2 Chassis
  - — 7500 LB GAWR for 4x4 Chassis @ 4.30 Ratio
  - — 7500 LB GAWR for 4x4 Chassis @ 4.88 Ratio
- Max 7500 lbs. Front Springs/GAWR rating for configuration selected

AMBULANCE PREP PACKAGE (47A)

Availability:
- Optional on XL and XLT (Fleet Only)

Usage:
- Incomplete vehicle package – req. further manufacture and certification by a final stage manufacturer
- Ford vehicles are suitable for producing ambulances only if equipped w/the Ford Ambulance Prep Package. In addition, Ford urges ambulance manufacturers to follow the recommendations of the Ford Incomplete Vehicle Manual and the Ford Truck Body Builders Layout Book (and pertinent supplements).
- Using a Ford vehicle without the Ford Ambulance Package to produce an ambulance voids the Ford warranty

Not available with:
- Snow Plow Prep Package (473), Trailer Tow Package (531), Trailer Tow Package – High Capacity (535), Heavy-Service Front Suspension Package (67H), Extra Heavy-Service Suspension Package (67X), Ambulance Prep Package w/Special Emissions (47L) or Fire/Rescue Prep Package w/EPA Special Emissions – For Diesel Engine (47J)

Requires:
- 6.7L Power Stroke® Diesel engine (99T)
- 7.3L Gas engine (99N)

Includes:
- 397 Amp Alternator (67B)
- Upgraded Front Springs / GAWR rating, please see Supplemental Order Guide, or visit fordbbas.com for complete details. (F-450, F-550, F-600)
- 5250 to 5990 lbs. Max Front Springs / Front GAWR (F-350) see supplemental Order Guide for complete details
- Operator Commanded Regeneration (OCR) – 6.7L Power Stroke® Diesel engine (99T) only
- 4.10 Limited-slip "Wide track" axle included w/F-350 DRW (X4W) – 6.7L Power Stroke® Diesel engine (99T) only

Options Available:
- Electronic-locking rear-axle optional w/F-350 SRW
- "Standard" width 4.10 Limited-slip rear-axle w/DRW (X4N)

NOTE: Stationary Elevated Idle Control (SEIC) has been integrated into the engine control module.

★ = New for this model year

PACKAGED OPTIONS/EMISSIONS

AMBULANCE PREP PACKAGE W/EPA SPECIAL EMERGENCY VEHICLE EMISSIONS (47L)

Availability:
- Optional on XL and XLT (Fleet Only)

Usage:
- Incomplete vehicle package – req. further manufacture and certification by a final stage manufacturer
- Ford vehicles are suitable for producing ambulances with special emissions only if equipped w/the Ford Ambulance Prep Package w/EPA Special Emergency Vehicle Emissions. In addition, Ford urges ambulance manufacturers to follow the recommendations of the Ford Incomplete Vehicle Manual and the Ford Truck Body Builders Layout Book (and pertinent supplements).
- Using a Ford vehicle without the Ford Ambulance Package w/EPA Special Emergency Vehicle Emissions to produce an ambulance with special emissions voids the Ford warranty

Not available with:
- Snow Plow Prep Package (473), Trailer Tow Package (531), Trailer Tow Package – High Capacity (535), Heavy-Service Front Suspension Package (67H), Extra Heavy-Service Suspension Package (67X), Ambulance Prep Package (47A) or Fire/Rescue Prep Package w/EPA Special Emissions – For Diesel Engine (47J)

Requires:
- 6.7L Power Stroke® Diesel engine (99T)

Includes:
- 397 Amp Alternator (67B)
- Upgraded Front Springs / GAWR rating, please see Supplemental Order Guide, or visit fordbbas.com for complete details. (F-450, F-550, F-600)
- 5250 to 5990 lbs. Max Front Springs / Front GAWR (F-350) see supplemental Order Guide for complete details
- Operator Commanded Regeneration (OCR)
- "Wide track" axle included w/F-350 DRW (X4W)

Options Available:
- Electronic-locking rear-axle optional w/F-350 SRW
- "Standard" width 4.10 Limited-slip rear-axle w/DRW (X4N)

NOTE 1: ***Stationary Elevated Idle Control (SEIC) has been integrated into the engine control module.***

NOTE 2: ***Engine Calibration significantly reduces the possibility of depower mode when in stationary PTO operation***

NOTE 3: ***Operator commanded regen allowed down to 30% of DPF filter full, instead of 100%***

NOTE 4: ***Must meet the definition of an Emergency Vehicle, "an Ambulance or Fire Truck" per 40 CFR 86.1803.01 in the Federal Register.***

NOTE 5: ***California Code of Regulations allows for the sale of Federally certified emergency vehicles in California.***

FIRE/RESCUE PREP PACKAGE W/EPA SPECIAL EMISSIONS – FOR DIESEL ENGINE (47J)

Availability:
- Optional on XL and XLT (Fleet Only)

Usage:
- Incomplete vehicle package – req. further manufacture and certification by a final stage manufacturer
- Ford urges fire/rescue vehicle manufacturers to follow the recommendations of the Ford Incomplete Vehicle Manual and the Ford Truck Body Builders Layout Book (and pertinent supplements).

Not available with:
- Snow Plow Prep Package (473), Heavy-Service Front Suspension Package (67H), Extra Heavy-Service Suspension Package (67X) or Ambulance Prep Packages (47A/47L)

Requires:
- 6.7L Power Stroke® Diesel engine (99T)

Includes:
- 397 Amp Alternator (67B)
- Upgraded Front Springs / GAWR rating, please see Supplemental Order Guide, or visit fordbbas.com for complete details.
- Operator Commanded Regeneration (OCR)

NOTE 1: ***Stationary Elevated Idle Control (SEIC) has been integrated into the engine control module.***

NOTE 2: ***Engine Calibration significantly reduces the possibility of depower mode when in stationary PTO operation***

NOTE 3: ***Operator commanded regen allowed down to 30% of DPF filter full, instead of 100%***

NOTE 4: ***Must meet the definition of an Emergency Vehicle, "an Ambulance or Fire Truck" per 40 CFR 86.1803.01 in the Federal Register.***

NOTE 5: ***California Code of Regulations allows for the sale of Federally certified emergency vehicles in California.***

PAYLOAD DOWNGRADE PACKAGE (68D)

Availability:
- Required on F-350 SRW w/17" wheels/tires
- Optional on F-350 SRW w/18" wheels/tires, F-450 and F-550

Not available with:
- 7.3L Gas engine (99N) (F-350 SRW Only)
- 6.7L Power Stroke® Diesel engine (99T) (F-350 SRW Only)

Requires:
- 26.5 mid ship fuel tank (65M) on F-350 SRW
- Center High-Mounted Stop Lamp (CHMSL) (59H) for vehicles with 10,000 lbs. or less Gross Vehicle Weight Rating

Includes:
- 9,800 lbs. Gross Vehicle Weight Rating (F-350 SRW 17" Only)
- 10,000 lbs. Gross Vehicle Weight Rating (F-350 SRW 18" Only)
- 15,000 lbs. Gross Vehicle Weight Rating (F-450 Only)
- 17,500 lbs. Gross Vehicle Weight Rating (F-550 Only)

PAYLOAD UPGRADE PACKAGE (68U)

Availability:
- Optional on XL and XLT F-550 Chassis Cabs 145" wheelbase with 7.3L Gas engine (99N)

Requires:
- 4.88 Limited-slip rear-axle (X8L)

Includes:
- Increased GVWR to 19,000 lbs.
- Upgraded frame
- Upgraded rear-axle

NOTE: ***See Order Guide Supplemental Reference for further details on GVWR and payload ranges***

★ = New for this model year

PACKAGED OPTIONS/EMISSIONS

PAYLOAD PLUS UPGRADE PACKAGE (68M)

Availability:
- Optional on F-550

Not available with:
- 4.30 Limited-slip rear-axle
- 145" wheelbase on gas engine

Requires:
- 4.88 Limited-slip rear-axle (X8L)

Includes:
- Increases GVWR from 18,000 lbs. to 19,500 lbs.
- Increases max RGAWR to 14,706
- Low Deflection/High Capacity Rear Springs
- Upgraded frame
- Upgraded rear-axle

Options Available:
- Low Deflection Spacer (86S)

NOTE: See Order Guide Supplemental Reference for further details on GVWR.

16,000 GVWR PACKAGE (68L)

Availability:
- Optional on all F-450 Chassis Cabs

Includes:
- Provides 16,000 lbs. Gross Vehicle Weight Rating

LOW DEFLECTION SPACER (86S)

Availability:
- Optional on F-450, F-550 and F-600 Chassis Cabs

Not available with:
- 4x4 w/145” WB

Usage:
- Recommended for rear-biased loading, such as wrecker/retriever applications

Includes:
- 2” spacer blocks

CNG/Propane GASEOUS ENGINE PREP PACKAGE (98F)

Availability:
- Optional on all F-350

Requires:
- 6.2L Gas Engine (996)

Includes:
- Hardened Engine Intake Valves and Valve Seats
- Bi-Fuel intake manifold

NOTE: This package does not include CNG/Propane fuel tanks, lines, etc. Vehicle will be equipped with the standard factory gasoline fuel system. Additional equipment combined with Certified calibration reflash is required, from an external upfitter, to convert the vehicle to a CNG/Propane fueled vehicle. See Alternative Fuel Buyers Guide:
www.ford.com/altfuelbuyersguide
Ford Motor Company does not provide an exhaust or evaporative emissions certificate with this option when converted to use CNG or Propane fuel. Ford does not represent that a vehicle converted to use CNG or Propane will comply with all applicable U.S. or Canadian safety standards. It is the responsibility of the final stage manufacturer (body-builder, installer, alterer or subsequent stage manufacturer) to determine that any vehicle converted to use CNG or Propane complies with U.S. Federal, California or Canadian exhaust and evaporative emission requirements, Federal fuel economy standards, U.S. and Canadian safety standards, labeling and any other requirements

CNG/Propane GASEOUS ENGINE PREP PACKAGE (98G)

Availability:
- Optional on all XL and XLT F-450, F-550 and F-600

Requires:
- 7.3L Gas engine (99N)

Includes:
- Hardened Engine Intake Valves and Valve Seats

NOTE: This package does not include CNG/Propane fuel tanks, lines, etc. Vehicle will be equipped with the standard factory gasoline fuel system. Additional equipment combined with Certified calibration reflash is required, from an external upfitter, to convert the vehicle to a CNG/Propane fueled vehicle. See Alternative Fuel Buyers Guide:
www.ford.com/altfuelbuyersguide
Ford Motor Company does not provide an exhaust or evaporative emissions certificate with this option when converted to use CNG or Propane fuel. Ford does not represent that a vehicle converted to use CNG or Propane will comply with all applicable U.S. or Canadian safety standards. It is the responsibility of the final stage manufacturer (body-builder, installer, alterer or subsequent stage manufacturer) to determine that any vehicle converted to use CNG or Propane complies with U.S. Federal, California or Canadian exhaust and evaporative emission requirements, Federal fuel economy standards, U.S. and Canadian safety standards, labeling and any other requirements

REAR VIEW CAMERA AND PREP KIT (872)

Availability:
- Optional on all Chassis Cabs

Pre-installed Content Includes:
- Cab Wiring
- Frame Wiring to the rear most cross member

Upfitters kit Includes:
- Camera with mounting bracket
- 20‘ jumper wire
- Camera mounting and aiming instructions

Vehicle Special Order (VSO)

FLEET ONLY. See www.fmcdealer.com for current VSO Order Guide. This live guide includes VSO option codes, descriptions and pricing. Email vsomail@ford.com or call 1.800.34.FLEET, menu 4 with any VSO questions you may have.

High Sulfur Diesel Fuel Usage

Vehicles for intended usage with diesel fuel sulfur content greater than 15ppm require Euro II (>500ppm sulfur) or Euro III (<500ppm sulfur) packages to avoid engine functionality issues.

Packages are available through Export Order Guide with the appropriate US EPA exemption or verifiable export usage.

NOTE: JP8 fuel is supported and compatible with these packages

Leaded Fuel Capable

NOTE: Post build modification kits are not available. Vehicles must be ordered correctly for the market that they are to be sold and operated in.

★ = New for this model year

PACKAGED OPTIONS/EMISSIONS

European Certified Headlamps

European certified headlamp package is available for export usage through Export Order Guide.

NOTE: Post build modification kits are not available. Vehicles must be ordered correctly for the market that they are to be sold and operated in.

MISCELLANEOUS OPTIONS

COV required **79V**
Priced DORA..... **C09**

PAYLOAD PACKAGE SELECTOR CHART – Refer to Supplemental Reference Section for Payload Information.

EMISSIONS STANDARD/OPTIONAL EQUIPMENT

50-STATE EMISSIONS SYSTEM..... **425**
Standard on all Vehicles

FRONT LICENSE PLATE BRACKET**.....153**
Standard in states requiring two license plates and optional to all others.

POWERTRAIN

ENGINE HORSEPOWER AND TORQUE RATINGS*

ENGINE	TRANSMISSION	NOMINAL COMPRESSION RATIO	50-STATE HORSEPOWER H.P. @ RPM	50-STATE TORQUE FT. LBS. @ RPM
ALL				
6.2L 2V Gas SOHC EFI NA V8 (Flex-Fuel)	TorqShift® Ten-Speed Automatic w/SelectShift® Automatic	TBD	TBD @ TBD	TBD @ TBD
7.3L 2V Gas DEVCT NA PFI V8	TorqShift® Ten-Speed Automatic w/SelectShift® Automatic	TBD	TBD @ TBD	TBD @ TBD
6.7L 4V OHV Power Stroke® V8 Turbo Diesel B20	TorqShift® Ten-Speed Automatic w/SelectShift® Automatic	TBD	TBD @ TBD	TBD @ TBD

(1) 10,000 lbs. GVWR and Under
(2) 10,001 lbs. GVWR and above

FUEL ECONOMY

TRUCKS WITH GROSS VEHICLE WEIGHT RATINGS OVER 8,500 POUNDS ARE NOT INCLUDED IN THE EPA FUEL ECONOMY RATING SYSTEM. FUEL ECONOMY INFORMATION ON THESE MODELS IS GENERALLY NOT AVAILABLE BECAUSE OF WIDE VARIANCES IN VEHICLE LOADING AND OPERATIONAL CONDITIONS BETWEEN VARIOUS CUSTOMER APPLICATIONS.

★ = New for this model year

EXHIBIT A

Subdivision Participation and Release Form

Governmental Entity:	State: Nevada
Authorized Official:	
Address 1:	
Address 2:	
City, State, Zip:	
Phone:	
Email:	

The governmental entity identified above ("*Governmental Entity*"), in order to obtain and in consideration for the benefits provided to the Governmental Entity pursuant to the Settlement Agreement and Release between CVS and the State of Nevada ("*CVS-Nevada Settlement*"), and acting through the undersigned authorized official, hereby elects to participate in the CVS-Nevada Settlement, release all Released Claims against all Released Entities, and agrees as follows.

1. The Governmental Entity is aware of and has reviewed the CVS-Nevada Settlement, understands that all terms in this Subdivision Participation and Release Form have the meanings defined therein, and agrees that by executing this Subdivision Participation and Release Form, the Governmental Entity elects to participate in the CVS-Nevada Settlement and become a Participating Subdivision as provided therein.

2. The Governmental Entity shall promptly, and in any event no later than the Subdivision Participation Date, dismiss with prejudice any Released Claims that it has filed.

3. The Governmental Entity agrees to the terms of the CVS-Nevada Settlement pertaining to Participating Subdivisions as defined therein.

4. By agreeing to the terms of the CVS-Nevada Settlement and becoming a Releasor, the Governmental Entity is entitled to the benefits provided therein, including, if applicable, Annual Remediation Payments.

5. The Governmental Entity agrees to use any monies it receives through the CVS-Nevada Settlement solely for the purposes provided therein.

6. The Governmental Entity, as a Participating Subdivision, hereby becomes a Releasor for all purposes in the CVS-Nevada Settlement, including without limitation all provisions of Section VI (Release), and along with all departments, agencies, divisions, boards, commissions, districts, instrumentalities of any kind and attorneys, and any person in their official capacity elected or appointed to serve any of the foregoing and any agency, person, or other entity claiming by or through any of the foregoing, and any other entity identified in the definition of Releasor, hereby releases Released Entities to the fullest extent of its authority. As a Releasor, the Governmental Entity hereby absolutely, unconditionally, and irrevocably covenants not to bring, file, or claim, or to cause, assist or permit to be brought,

filed, or claimed, or to otherwise seek to establish liability for any Released Claims against any Released Entity in any forum whatsoever. The releases provided for in the CVS-Nevada Settlement and agreed to herein are intended by the Parties to be broad and shall be interpreted so as to give the Released Entities the broadest possible bar against any liability relating in any way to Released Claims and extend to the full extent of the power of the Governmental Entity to release claims. The CVS-Nevada Settlement shall be a complete bar to any Released Claim.

7. The Governmental Entity hereby takes on all rights and obligations of a Participating Subdivision as set forth in the CVS-Nevada Settlement.

8. In connection with the releases provided for in the CVS-Nevada Settlement, each Governmental Entity expressly waives, releases, and forever discharges any and all provisions, rights, and benefits conferred by any law of any state or territory of the United States or other jurisdiction, or principle of common law, which is similar, comparable, or equivalent to § 1542 of the California Civil Code, which reads:

> **General Release; extent.** A general release does not extend to claims that the creditor or releasing party does not know or suspect to exist in his or her favor at the time of executing the release that, if known by him or her would have materially affected his or her settlement with the debtor or released party.

A Releasor may hereafter discover facts other than or different from those which it knows, believes, or assumes to be true with respect to the Released Claims, but each Governmental Entity hereby expressly waives and fully, finally, and forever settles, releases and discharges, upon the Effective Date, any and all Released Claims that may exist as of such date but which Releasors do not know or suspect to exist, whether through ignorance, oversight, error, negligence or through no fault whatsoever, and which, if known, would materially affect the Governmental Entities' decision to participate in the CVS-Nevada Settlement.

9. Nothing herein is intended to modify in any way the terms of the CVS-Nevada Settlement, to which Governmental Entity hereby agrees. To the extent this Subdivision Participation and Release Form is interpreted differently from the CVS-Nevada Settlement in any respect, the CVS-Nevada Settlement controls.

I have all necessary power and authorization to execute this Subdivision Participation and Release Form on behalf of the Governmental Entity.

Signature: _____

Name: _____

Title: _____

Date: _____

EXHIBIT A

Subdivision Participation and Release Form

Governmental Entity:	State: Nevada
Authorized Official:	
Address 1:	
Address 2:	
City, State, Zip:	
Phone:	
Email:	

The governmental entity identified above ("*Governmental Entity*"), in order to obtain and in consideration for the benefits provided to the Governmental Entity pursuant to the Settlement Agreement and Release between CVS and the State of Nevada ("*CVS-Nevada Settlement*"), and acting through the undersigned authorized official, hereby elects to participate in the CVS-Nevada Settlement, release all Released Claims against all Released Entities, and agrees as follows.

1. The Governmental Entity is aware of and has reviewed the CVS-Nevada Settlement, understands that all terms in this Subdivision Participation and Release Form have the meanings defined therein, and agrees that by executing this Subdivision Participation and Release Form, the Governmental Entity elects to participate in the CVS-Nevada Settlement and become a Participating Subdivision as provided therein.

2. The Governmental Entity shall promptly, and in any event no later than the Subdivision Participation Date, dismiss with prejudice any Released Claims that it has filed.

3. The Governmental Entity agrees to the terms of the CVS-Nevada Settlement pertaining to Participating Subdivisions as defined therein.

4. By agreeing to the terms of the CVS-Nevada Settlement and becoming a Releasor, the Governmental Entity is entitled to the benefits provided therein, including, if applicable, Annual Remediation Payments.

5. The Governmental Entity agrees to use any monies it receives through the CVS-Nevada Settlement solely for the purposes provided therein.

6. The Governmental Entity, as a Participating Subdivision, hereby becomes a Releasor for all purposes in the CVS-Nevada Settlement, including without limitation all provisions of Section VI (Release), and along with all departments, agencies, divisions, boards, commissions, districts, instrumentalities of any kind and attorneys, and any person in their official capacity elected or appointed to serve any of the foregoing and any agency, person, or other entity claiming by or through any of the foregoing, and any other entity identified in the definition of Releasor, hereby releases Released Entities to the fullest extent of its authority. As a Releasor, the Governmental Entity hereby absolutely, unconditionally, and irrevocably covenants not to bring, file, or claim, or to cause, assist or permit to be brought,

filed, or claimed, or to otherwise seek to establish liability for any Released Claims against any Released Entity in any forum whatsoever. The releases provided for in the CVS-Nevada Settlement and agreed to herein are intended by the Parties to be broad and shall be interpreted so as to give the Released Entities the broadest possible bar against any liability relating in any way to Released Claims and extend to the full extent of the power of the Governmental Entity to release claims. The CVS-Nevada Settlement shall be a complete bar to any Released Claim.

7. The Governmental Entity hereby takes on all rights and obligations of a Participating Subdivision as set forth in the CVS-Nevada Settlement.

8. In connection with the releases provided for in the CVS-Nevada Settlement, each Governmental Entity expressly waives, releases, and forever discharges any and all provisions, rights, and benefits conferred by any law of any state or territory of the United States or other jurisdiction, or principle of common law, which is similar, comparable, or equivalent to § 1542 of the California Civil Code, which reads:

> **General Release; extent.** A general release does not extend to claims that the creditor or releasing party does not know or suspect to exist in his or her favor at the time of executing the release that, if known by him or her would have materially affected his or her settlement with the debtor or released party.

A Releasor may hereafter discover facts other than or different from those which it knows, believes, or assumes to be true with respect to the Released Claims, but each Governmental Entity hereby expressly waives and fully, finally, and forever settles, releases and discharges, upon the Effective Date, any and all Released Claims that may exist as of such date but which Releasors do not know or suspect to exist, whether through ignorance, oversight, error, negligence or through no fault whatsoever, and which, if known, would materially affect the Governmental Entities' decision to participate in the CVS-Nevada Settlement.

9. Nothing herein is intended to modify in any way the terms of the CVS-Nevada Settlement, to which Governmental Entity hereby agrees. To the extent this Subdivision Participation and Release Form is interpreted differently from the CVS-Nevada Settlement in any respect, the CVS-Nevada Settlement controls.

I have all necessary power and authorization to execute this Subdivision Participation and Release Form on behalf of the Governmental Entity.

Signature: _____

Name: _____

Title: _____

Date: _____

CVS SETTLEMENT (ESTIMATED PAYMENTS 1-10)
OPIOID LITIGATION SETTLEMENT CALCULATOR

TOTAL ABATEMENT AMOUNT*	**$**	**151,858,772.26**
NET ALLOCATION TO STATE	**$**	**66,605,257.51**
GROSS ALLOCATION TO LOCAL GOVERNMENTS	**$**	**85,253,514.75**
COMMON BENEFITS FUND**	**$**	**4,268,751.35**
NET ALLOCATION TO LOCAL GOVERNMENTS	**$**	**80,984,763.40**

LOCAL GOVERNMENT ENTITY	NET ALLOCATION	ANNUAL NET ALLOCATION ESTIMATE (10 TOTAL)
STATE OF NEVADA		$ 6,660,525.75
CARSON CITY	$ 1,469,550.12	$ 146,955.01
CHURCHILL COUNTY	$ 567,950.36	$ 56,795.04
CLARK COUNTY	$ 54,198,893.09	$ 5,419,889.29
DOUGLAS COUNTY	$ 1,344,465.51	$ 134,446.55
ELKO COUNTY	$ 876,720.42	$ 87,672.04
ESMERALDA COUNTY	$ 40,273.03	$ 4,027.30
EUREKA COUNTY	$ 83,703.71	$ 8,370.37
HUMBOLDT COUNTY	$ 825,455.41	$ 82,545.54
LANDER COUNTY	$ 293,767.28	$ 29,376.73
LINCOLN COUNTY	$ 192,199.85	$ 19,219.99
LYON COUNTY	$ 1,273,193.62	$ 127,319.36
MINERAL COUNTY	$ 485,336.05	$ 48,533.61
NYE COUNTY	$ 1,297,120.13	$ 129,712.01
PERSHING COUNTY	$ 293,529.17	$ 29,352.92
STOREY COUNTY	$ 102,357.34	$ 10,235.73
WASHOE COUNTY	$ 7,380,909.94	$ 738,090.99
WHITE PINE COUNTY	$ 846,985.35	$ 84,698.54
BOULDER CITY	$ 119,748.97	$ 11,974.90
ELY CITY	$ 5,358.99	$ 535.90
FERNLEY CITY	$ 11,702.86	$ 1,170.29
HENDERSON CITY	$ 1,864,321.40	$ 186,432.14
LAS VEGAS CITY	$ 3,823,045.36	$ 382,304.54
MESQUITE CITY	$ 118,648.30	$ 11,864.83
NORTH LAS VEGAS CITY	$ 1,964,598.60	$ 196,459.86
RENO CITY	$ 1,098,385.28	$ 109,838.53
SPARKS CITY	$ 344,446.76	$ 34,444.68
WEST WENDOVER CITY	$ 45,676.69	$ 4,567.67
CENTRAL LYON FIRE PROTECTION DISTRICT	$ 12,222.44	$ 1,222.24
NORTH LYON FIRE PROTECTION DISTRICT	$ 4,197.37	$ 419.74
TOTAL:	**$ 80,984,763.40**	**$ 14,759,002.09**

*Estimated 10 equal annual payments to be disbursed; Attorney fees and costs resolved directly with outside counsel and not deducted.

**Common Benefits Fund deduction applicable to local governments only.

SETTLEMENT AGREEMENT AND RELEASE

This Settlement Agreement and Release ("Agreement") between and among CVS, the State of Nevada, and Participating Subdivisions memorializes the agreement between CVS and the State entered into on March 2, 2023, to resolve opioid-related Claims against CVS, including without limitation all Claims against CVS in *State of Nevada v. McKesson Corporation, et al.*, Case No. A-19-796755-B (Nev. Dist. Ct., Clark Cnty.), and all Claims brought against CVS by Participating Subdivisions.

I. Definitions

A. Definitions from CVS Global Settlement. The following definitions in Section I of the CVS Global Settlement and any exhibits they reference are incorporated by reference and apply to this Agreement: "Actions," "Alleged Harms," "Claim," "Claim-Over," "Covered Conduct," "Later Litigating Subdivision," "Litigating Subdivision," "Non-Litigating Subdivision," "Non-Participating Subdivision," "Non-Party Covered Conduct Claim," "Non-Released Entity," "Opioid Remediation," "Opioid Tax," "Parties," "Primary Subdivision," "Product," "Released Claims," "Released Entities," "Releasors," "Subdivision," and "Threshold Motion." When used in the foregoing definitions, the term "CVS" shall mean "CVS" as defined below, the terms "Eligible State" and "Settling State" shall mean the "State" as defined below, and the term "Initial Subdivision Participation Date" shall mean the "Subdivision Participation Date" as defined below, except that when used in the definition of "Later Litigating Subdivision," the term "Initial Subdivision Participation Date" shall mean March 2, 2023.

B. Modified Definitions from CVS Global Settlement. The following definitions in Section I of the CVS Global Settlement apply to this Agreement as modified below:

1. "*Agreement*" means this Settlement Agreement and Release, together with any exhibits attached hereto, which are incorporated herein by reference.

2. "*CVS*" means CVS Pharmacy, Inc., CVS TN Distribution, L.L.C., Longs Drug Stores California, L.L.C., and all of their past and present direct and indirect parents and subsidiaries, including without limitation CVS Health Corporation. For the avoidance of doubt, this definition shall not in any way limit the definition of Released Entities.

3. "*Designated State*" means the State of Nevada.

4. "*Participating Subdivision*" means a Subdivision that executes the Subdivision Participation and Release Form attached as Exhibit A and promptly dismisses with prejudice any pending Claims against Released Entities.

5. "*Payment Year*" means the calendar year during which the applicable Annual Payment is due pursuant to Section III.B. Payment Year 1 is 2023, Payment Year

2 is 2024 and so forth. References to payment "*for a Payment Year*" mean the Annual Payment due during that year.

6. "*Total Remediation Amount*" means the aggregate amount to be paid by CVS under this Agreement as specified in Section II.A.

C. Additional Definitions. The following additional definitions apply to this Agreement:

1. "*Annual Remediation Payment*" means the total amount payable by CVS to the State for Opioid Remediation under this Agreement for each Payment Year.

2. "*Common Benefit Assessment*" means the amount that is required to be held back and paid to the MDL Common Benefit Fund pursuant to the MDL Ongoing Common Benefit Order (Doc. 4428).

3. "*Court*" means the Clark County District Court, State of Nevada.

4. "*CVS Global Settlement*" means the global settlement that CVS entered into on December 9, 2022, to resolve prescription opioid lawsuits and claims brought by states and their political subdivisions, which is not yet, and may not become, effective. To the extent definitions, terms, provisions, or exhibits in the CVS Global Settlement are incorporated in this Agreement, those definitions, terms, provisions, and exhibits apply regardless of whether the CVS Global Settlement becomes effective. A copy of the CVS Global Settlement is attached as Exhibit B to this Agreement.

5. "*Execution Date*" means the date on which this Agreement is executed by the last Party to do so.

6. "*Nevada AG Action*" means the lawsuit filed by the State in the Court, captioned *State of Nevada v. McKesson Corporation, et al.*, Case No. A-19-796755-B.

7. "*One Nevada Agreement*" means the One Nevada Agreement on Allocation of Opioid Recoveries. A copy of the One Nevada Agreement is attached as Exhibit C to this Agreement.

8. "*State*" means the State of Nevada, including all of its departments, agencies, divisions, boards, commissions, offices, instrumentalities, and officers, including without limitation the Attorney General. Any reference to "Eligible State" or "Settling State" in a definition, term, or provision of the CVS Global Settlement that is incorporated by reference in this Agreement shall mean the State.

9. "*Subdivision Participation Date*" means ninety (90) days after the Execution Date. The Subdivision Participation Date may be extended by the mutual written agreements of CVS and the State.

II. Settlement of State's Claims and Dismissal of Nevada AG Action

A. Dismissal with Prejudice. Upon executing this Agreement, CVS and the State will execute and file a stipulation of dismissal in the Nevada AG Action providing for the dismissal with prejudice of the State's Claims against CVS. In the event that the Court declines to enter the stipulation of dismissal, this Agreement shall be null and void and shall have no effect.

B. Cessation of Litigation Activities. Any and all litigation activities in the Nevada AG Action related to Claims against CVS shall immediately cease upon execution of this Agreement.

III. Remediation Payments

A. Remediation Amount. CVS will pay a maximum of $151,858,722.26 to the State for Opioid Remediation (the "*Total Remediation Amount*"), less the Common Benefit Assessment. The balance shall be paid over ten (10) years pursuant to section III.B.

B. Annual Remediation Payments by CVS. CVS will make ten (10) Annual Remediation Payments in equal installments. Provided that an IRS Form W-9 and sufficient wire instructions are timely provided to CVS, the Annual Remediation Payment for Payment Year 1 will be due sixty (60) days after the Subdivision Participation Date, and the Annual Remediation Payments for Payment Years 2 through 10 will be due on August 31 of each such Payment Year.

C. Payment Adjustment if Later Litigation. If there is or was any Action by a Later Litigating Subdivision within three (3) years after the Execution Date, then the Annual Remediation Payment for Payment Year 10 shall be reduced by $4,000,000, if any such Action survived or survives a Threshold Motion.

IV. Allocation and Use of Remediation Payments

A. The Annual Remediation Payments shall be spent exclusively on Opioid Remediation pursuant to the requirements of the One Nevada Agreement. No portion of an Annual Remediation Payment may be allocated or distributed to a Non-Participating Subdivision.

V. Participation by Subdivisions

A. Requirements for Becoming a Participating Subdivision. A Subdivision becomes a Participating Subdivision by executing the Subdivision Participation and Release Form attached as Exhibit A by the Subdivision Participation Date and additionally, for a Litigating Subdivision, by promptly dismissing with prejudice its Action and Claims against the Released Entities by the Subdivision Participation Date. The State will provide CVS with the executed Settlement Participation and Release Forms for the Participating Subdivisions on or before the Subdivision Participation Date.

B. Attorney General's Representation and Warranty. The State, acting through the Attorney General of Nevada, by executing this Agreement, represents and warrants that (1) the One Nevada Agreement will ensure that all Subdivisions and Special Districts that are signatories to the One Nevada Agreement will become Participating Subdivisions, and (2) that any additional

Subdivision(s) and/or Special District(s) that sign(s) onto the One Nevada Agreement and participate(s) in the Walmart and/or Allergan settlement agreements also will become Participating Subdivisions. The State acknowledges the materiality of the foregoing representation and warranty.

VI. Release

A. Section XI of the CVS Global Settlement is incorporated by reference and applies to this Agreement, including without limitation the following provisions:

1. *Scope.* . . .[T]he Released Entities are hereby released and forever discharged from all of the Releasors' Released Claims. [The] State (for itself and its Releasors) and Participating Subdivision (for itself and its Releasors) hereby absolutely, unconditionally, and irrevocably covenants not to bring, file, or claim; or to cause, assist in bringing or permit to be brought, filed, or claimed; or to otherwise seek to establish liability for any Released Claim against any Released Entity in any forum whatsoever. The releases provided for in this Agreement are broad, shall be interpreted so as to give the Released Entities the broadest possible bar against any liability relating in any way to any Released Claim, and extend to the full extent of the power of [the] State and its Attorney General to release claims. This Agreement shall be a complete bar to any Released Claim.

2. *General Release*. In connection with the releases provided for in this Agreement, [the] State (for itself and its Releasors) and [each] Participating Subdivision (for itself and its Releasors) expressly waives, releases, and forever discharges any and all provisions, rights, and benefits conferred by any law of any State or territory of the United States or other jurisdiction, or principle of common law, which is similar, comparable, or equivalent to § 1542 of the California Civil Code, which reads:

> **General Release; extent**. A general release does not extend to claims that the creditor or releasing party does not know or suspect to exist in his or her favor at the time of executing the release and that if known by him or her, would have materially affected his or her settlement with the debtor or released party.

A Releasor may hereafter discover facts other than or different from those which it knows, believes, or assumes to be true with respect to the Released Claims, but each Settling State (for itself and its Releasors) and Participating Subdivision (for itself and its Releasors) hereby expressly waives and fully, finally, and forever settles, releases and discharges . . . any and all Released Claims that may exist as of such date even if Releasors do not know or suspect such claims to exist, whether through ignorance, oversight, error, negligence or through no fault whatsoever, and even if knowledge of the existence of such claims would materially affect the . . . State['s] decision to enter into this Agreement or the Participating Subdivisions' decision to participate in this Agreement.

3. *Representation and Warranty*. The signator[y] hereto on behalf of [the State] expressly represent[s] and warrant[s] that [he or has] (or will obtain . . .) the authority to settle and release, to the maximum extent of the State's power, all Released Claims of

(1) the[] . . . State[], (2) all past and present executive departments, state agencies, divisions, boards, commissions and instrumentalities with the regulatory authority to enforce state and federal controlled substances acts, and (3) any of the[] . . . State's past and present executive departments, agencies, divisions, boards, commissions and instrumentalities that have the authority to bring Claims related to Alleged Harms and/or Covered Conduct seeking money (including abatement and/or remediation) or revocation of a pharmaceutical distribution or dispensing license. For the purposes of clause (3) above, executive departments, agencies, divisions, boards, commissions, and instrumentalities are those that are under the executive authority or direct control of the State's Governor. Also for the purposes of clause (3), a release from [the] State's Governor, to be materially similar to that in Exhibit X, is sufficient to demonstrate that the appropriate releases have been obtained.

VII. Miscellaneous

A. Further Incorporation by Reference. Sections V.F, XII.A, XII.E, XIII.A through XIII.D, XIII.F through XIII.P, and XIII.R through XIII.T of the CVS Global Settlement are incorporated by reference and apply to this Agreement.

B. Warranty of Equitable Treatment. The State warrants that, after the Execution Date, it will not settle claims against another pharmacy defendant that is more favorable to that other defendant based on the total amount of the settlement (including without limitation remediation payments, fees, and costs) with CVS (subject to a net-present-value adjustment in the event of different payment periods). The State acknowledges the materiality of the foregoing warranty.

C. Public Statements. CVS and the State agree to work together and coordinate the announcement and timing of the Agreement.

D. Records Custodian. CVS will provide an affidavit(s) from a records custodian to authenticate up to fifty (50) records requested by the State, which have been produced by CVS in the Nevada AG Action and that are capable of being authenticated by CVS. In the event the affidavit(s) is (are) not accepted in the Nevada AG Action, CVS will make a witness available to authenticate the records at trial if necessary.

E. Fees and Costs. Attorney fees and costs have been addressed and resolved directly between CVS and counsel.

F. Amendment. This Agreement may be amended or modified only by the mutual written agreement of CVS and the Attorney General.

IN WITNESS WHEREOF, CVS and the State, through their fully authorized representatives, have executed this Agreement as of the dates set forth below.

CVS PHARMACY, INC.
CVS TN DISTRIBUTION, L.L.C.
LONG DRUG STORES CALIFORNIA, L.L.C.

By: _____
Thomas S. Moffatt
Vice President, Secretary, and Senior Legal Counsel

Date: 3/15/23

STATE OF NEVADA

By: _____
Aaron D. Ford
Attorney General of Nevada

Date: 3/14/23

EXHIBIT A

Subdivision Participation and Release Form

Governmental Entity:	State: Nevada
Authorized Official:	
Address 1:	
Address 2:	
City, State, Zip:	
Phone:	
Email:	

The governmental entity identified above ("*Governmental Entity*"), in order to obtain and in consideration for the benefits provided to the Governmental Entity pursuant to the Settlement Agreement and Release between CVS and the State of Nevada ("*CVS-Nevada Settlement*"), and acting through the undersigned authorized official, hereby elects to participate in the CVS-Nevada Settlement, release all Released Claims against all Released Entities, and agrees as follows.

1. The Governmental Entity is aware of and has reviewed the CVS-Nevada Settlement, understands that all terms in this Subdivision Participation and Release Form have the meanings defined therein, and agrees that by executing this Subdivision Participation and Release Form, the Governmental Entity elects to participate in the CVS-Nevada Settlement and become a Participating Subdivision as provided therein.

2. The Governmental Entity shall promptly, and in any event no later than the Subdivision Participation Date, dismiss with prejudice any Released Claims that it has filed.

3. The Governmental Entity agrees to the terms of the CVS-Nevada Settlement pertaining to Participating Subdivisions as defined therein.

4. By agreeing to the terms of the CVS-Nevada Settlement and becoming a Releasor, the Governmental Entity is entitled to the benefits provided therein, including, if applicable, Annual Remediation Payments.

5. The Governmental Entity agrees to use any monies it receives through the CVS-Nevada Settlement solely for the purposes provided therein.

6. The Governmental Entity, as a Participating Subdivision, hereby becomes a Releasor for all purposes in the CVS-Nevada Settlement, including without limitation all provisions of Section VI (Release), and along with all departments, agencies, divisions, boards, commissions, districts, instrumentalities of any kind and attorneys, and any person in their official capacity elected or appointed to serve any of the foregoing and any agency, person, or other entity claiming by or through any of the foregoing, and any other entity identified in the definition of Releasor, hereby releases Released Entities to the fullest extent of its authority. As a Releasor, the Governmental Entity hereby absolutely, unconditionally, and irrevocably covenants not to bring, file, or claim, or to cause, assist or permit to be brought,

filed, or claimed, or to otherwise seek to establish liability for any Released Claims against any Released Entity in any forum whatsoever. The releases provided for in the CVS-Nevada Settlement and agreed to herein are intended by the Parties to be broad and shall be interpreted so as to give the Released Entities the broadest possible bar against any liability relating in any way to Released Claims and extend to the full extent of the power of the Governmental Entity to release claims. The CVS-Nevada Settlement shall be a complete bar to any Released Claim.

7. The Governmental Entity hereby takes on all rights and obligations of a Participating Subdivision as set forth in the CVS-Nevada Settlement.

8. In connection with the releases provided for in the CVS-Nevada Settlement, each Governmental Entity expressly waives, releases, and forever discharges any and all provisions, rights, and benefits conferred by any law of any state or territory of the United States or other jurisdiction, or principle of common law, which is similar, comparable, or equivalent to § 1542 of the California Civil Code, which reads:

> **General Release; extent.** A general release does not extend to claims that the creditor or releasing party does not know or suspect to exist in his or her favor at the time of executing the release that, if known by him or her would have materially affected his or her settlement with the debtor or released party.

A Releasor may hereafter discover facts other than or different from those which it knows, believes, or assumes to be true with respect to the Released Claims, but each Governmental Entity hereby expressly waives and fully, finally, and forever settles, releases and discharges, upon the Effective Date, any and all Released Claims that may exist as of such date but which Releasors do not know or suspect to exist, whether through ignorance, oversight, error, negligence or through no fault whatsoever, and which, if known, would materially affect the Governmental Entities' decision to participate in the CVS-Nevada Settlement.

9. Nothing herein is intended to modify in any way the terms of the CVS-Nevada Settlement, to which Governmental Entity hereby agrees. To the extent this Subdivision Participation and Release Form is interpreted differently from the CVS-Nevada Settlement in any respect, the CVS-Nevada Settlement controls.

I have all necessary power and authorization to execute this Subdivision Participation and Release Form on behalf of the Governmental Entity.

Signature: _____

Name: _____

Title: _____

Date: _____

CVS SETTLEMENT AGREEMENT

TABLE OF CONTENTS

Page

I. Definitions....2
II. Participation by States and Condition to Preliminary Agreement....14
III. Injunctive Relief....15
IV. Settlement Payments....16
V. Allocation and Use of Settlement Payments....31
VI. Enforcement....38
VII. Participation by Subdivisions....43
VIII. Condition to Effectiveness of Agreement and Filing of Consent Judgment....46
IX. Additional Remediation....46
X. Plaintiffs' Attorneys' Fees and Costs....47
XI. Release....47
XII. Later Litigating Subdivisions; Non-Settling States....52
XIII. Miscellaneous....53
EXHIBIT A – Alleged Harms....A-1
EXHIBIT B – Enforcement Committee Organization Bylaws....B-1
EXHIBIT C – Litigation Subdivision List....C-1
EXHIBIT D – [Intentionally Omitted]....D-1
EXHIBIT E – List of Opioid Remediation Uses....E-1
EXHIBIT F – List of States and Allocation Percentages....F-1
EXHIBIT G – Subdivisions Eligible to Receive Direct Allocations from the Subdivision Fund and Subdivision Fund Allocation Percentages....G-1
EXHIBIT H – [Intentionally Omitted]....H-1
EXHIBIT I – Primary Subdivisions....I-1
EXHIBIT J – Illustrative List of Released Entities....J-1

EXHIBIT K – Subdivision Participation Form and Release K-1

EXHIBIT L – Settlement Fund Administrator L-1

EXHIBIT M – Maximum Payment Amounts M-1

EXHIBIT N – Additional Remediation Amount Allocation Percentages N-1

EXHIBIT O – Adoption of a State-Subdivision Agreement O-1

EXHIBIT P – Injunctive Relief P-1

EXHIBIT Q – [Intentionally Omitted] Q-1

EXHIBIT R – Agreement on Attorneys' Fees, Costs, and Expenses R-1

EXHIBIT S – Agreement on the State Outside Counsel Fee Fund S-1

EXHIBIT T – Agreement on the Joint State Cost Fund T-1

EXHIBIT U – IRS Form 1098-F U-1

EXHIBIT V – CVS Settlement Agreement Sign-on Form V-1

EXHIBIT W – Non-Litigating Threshold Subdivisions List W-1

EXHIBIT X – Governor's Release of Opioid-Related Claims X-1

CVS SETTLEMENT AGREEMENT

This Settlement Agreement, dated as of December 9, 2022 (the "*Agreement*"), sets forth the terms of settlement between and among the Settling States, CVS, and the Participating Subdivisions (as those terms are defined below). Upon satisfaction of the conditions set forth in Section II and Section VIII, this Agreement will be binding on all Settling States, Participating Subdivisions, and CVS. This Agreement will then be submitted for entry as part of Consent Judgments in the respective courts of each of the Settling States, pursuant to the terms set forth in Section VIII.

WHEREAS, certain States and Subdivisions have filed or could file Actions in various forums against CVS raising Claims or allegations concerning, related to, based upon, or in connection with the Alleged Harms and/or the Covered Conduct;

WHEREAS, CVS (i) denies each and all of the Claims and allegations of wrongdoing made by the States and Litigating Subdivisions in each of the Actions and maintains that it has meritorious defenses; (ii) denies all assertions of wrongdoing or liability against CVS arising out of any of the conduct, statements, acts or omissions alleged, or that could have been alleged, in the Actions already brought or that could be brought by any State or Subdivision related to the Covered Conduct and/or Alleged Harms and contends that the factual allegations made in the current Actions relating to CVS are false and materially inaccurate; (iii) denies that any State, Subdivision, or resident thereof was harmed by any conduct of CVS; (iv) denies liability, denies any wrongdoing, and denies it violated any federal or state statute, regulation, or common law; and (v) maintains that CVS would be able to successfully defend against the Claims and allegations at trial, that the facts do not support the allegations, that CVS engaged in no misconduct or unlawful activity, and that CVS caused no harm to any State, Subdivision, or resident thereof;

WHEREAS, the Parties have investigated the facts and analyzed the relevant legal issues regarding the Claims and defenses that have been or could have been asserted in the Actions;

WHEREAS, the Parties have determined that it is preferable to resolve any Claims the States and Subdivisions may have through a cooperative and mutually beneficial settlement that provides funding to remediate Alleged Harms;

WHEREAS, the Parties have each considered the costs, delays and uncertainty associated with the continued prosecution and defense of the Actions;

WHEREAS, the Parties believe the settlement set forth herein avoids the uncertainties of litigation and assures that the benefits reflected herein are obtained;

WHEREAS, the States have concluded that the terms of the settlement are fair, reasonable and adequate and in the best interests of the States and all Subdivisions and citizens and residents of the States;

WHEREAS, the Parties have agreed to the terms herein for the sole purpose of settlement, and nothing herein may be taken as or construed to be an admission or concession of any violation

of law, rule, or regulation, or of any other matter of fact or law, or of any liability or wrongdoing or lack thereof;

WHEREAS, no part of this Agreement, including its statements and commitments, shall constitute evidence of any liability, fault, or wrongdoing, or of any lack thereof; and

WHEREAS, unless the contrary is expressly stated, this Agreement is not intended for use by any Party or any third party for any purpose not expressly stated herein, including submission to any court for any purpose other than Court approvals associated with this Agreement.

NOW, THEREFORE, IT IS HEREBY AGREED by and between the Settling States, Participating Subdivisions, and CVS, by and through their respective counsel, as follows:

I. Definitions

For all sections of this Agreement except Exhibit E and Exhibit P, the following definitions apply:

A. "*Actions*" means any lawsuit by a Settling State or Participating Subdivision asserting any Released Claim against one or more Released Entities.

B. "*Additional Remediation Amount*" means the amount available to the Settling States totaling up to $28,527,739.

C. "*Advisory Committee*" has the meaning set forth in Section V.E.2.d.

D. "*Agreement*" has the definition set forth in the preamble, including all exhibits.

E. "*Alleged Harms*" means the alleged past, present, and future financial and societal harms and related expenditures arising out of the alleged misuse and abuse of Products, non-exclusive examples of which are described in the documents listed on Exhibit A, including those expenditures that have allegedly arisen as a result of the physical and bodily injuries sustained by individuals suffering from opioid-related addiction, abuse, death, and other related diseases and disorders, and that have allegedly been caused by CVS.

F. "*Allocation Statute*" means a state law that governs allocation, distribution, and/or use of some or all of the Settlement Fund amounts allocated to that State and/or its Subdivisions. In addition to modifying the allocation as set forth in Section V.D.2, an Allocation Statute may, without limitation, contain a Statutory Trust, further restrict expenditures of funds, form an advisory committee, establish oversight and reporting requirements, or address other default provisions and other matters related to the funds. An Allocation Statute is not required to address all three (3) types of funds comprising the Settlement Fund or all default provisions.

G. "*Annual Payment*" means the total amount payable to the Settlement Fund Administrator by CVS on the Payment Date each year, as calculated by the Settlement Fund Administrator pursuant to Section IV.C.3. For the avoidance of doubt, this term does not include the Additional Remediation Amount, amounts paid pursuant to Section X, amounts paid for the

cost of the Settlement Fund Administrator pursuant to Section V.C.4, or amounts paid for the cost of the Implementation Administrator pursuant to Section VIII.A.

H. "*Appropriate Official*" has the meaning set forth in Section XIII.F.3.

I. "*Base Payment*" has the meaning set forth in Section IV.G.

J. "*Bankruptcy Code*" means Title 11 of the United States Code, 11 U.S.C. §§ 101, *et seq.*

K. "*Bar*" means either: (1) a law barring Subdivisions in a State from maintaining Released Claims against Released Entities (either through a direct bar or through a grant of authority to release claims and the exercise of such authority in full); or (2) a ruling by the highest court of the State (or, in a State with a single intermediate court of appeals, the intermediate court of appeals when not subject to further review by the highest court of the State) setting forth the general principle that Subdivisions in the State may not maintain any Released Claims against Released Entities, whether on the ground of this Agreement (or the release in it) or otherwise. For the avoidance of doubt, a law or ruling that is conditioned or predicated upon payment by a Released Entity (apart from payments made by CVS under this Agreement) shall not constitute a Bar.

L. "*Case-Specific Resolution*" means either: (1) a law barring the Subdivision at issue from maintaining any Released Claims against any Released Entities (either through a direct bar or through a grant of authority to release claims and the exercise of such authority in full); or (2) a ruling by a court of competent jurisdiction over the Subdivision at issue that the Subdivision may not maintain any Released Claims at issue against any Released Entities, whether on the ground of this Agreement (or the release in it) or otherwise. For the avoidance of doubt, a law or ruling that is conditioned or predicated upon payment by a Released Entity (apart from payments made by CVS under this Agreement) shall not constitute a Case-Specific Resolution.

M. "*Claim*" means any past, present or future cause of action, claim for relief, cross-claim or counterclaim, theory of liability, demand, derivative claim, request, assessment, charge, covenant, damage, debt, lien, loss, penalty, judgment, right, obligation, dispute, suit, contract, controversy, agreement, *parens patriae* claim, promise, performance, warranty, omission, or grievance of any nature whatsoever, whether legal, equitable, statutory, regulatory or administrative, whether arising under federal, state or local common law, statute, regulation, guidance, ordinance or principles of equity, whether filed or unfiled, whether asserted or unasserted, whether known or unknown, whether accrued or unaccrued, whether foreseen, unforeseen or unforeseeable, whether discovered or undiscovered, whether suspected or unsuspected, whether fixed or contingent, and whether existing or hereafter arising, in all such cases, including but not limited to any request for declaratory, injunctive, or equitable relief, compensatory, punitive, or statutory damages, absolute liability, strict liability, restitution, abatement, subrogation, contribution, indemnity, apportionment, disgorgement, reimbursement, attorney fees, expert fees, consultant fees, fines, penalties, expenses, costs or any other legal, equitable, civil, administrative, or regulatory remedy whatsoever.

N. "*Claim-Over*" means a Claim asserted by a Non-Released Entity against a Released Entity on the basis of contribution, indemnity, or other claim-over on any theory relating to a Non-Party Covered Conduct Claim asserted by a Releasor.

O. "*Consent Judgment*" means a state-specific consent judgment in a form to be agreed by the Settling States and CVS prior to the Initial Subdivision Participation Date that, among other things, (1) approves this Agreement and (2) provides for the release set forth in Section XI.A, including the dismissal with prejudice of any Released Claims that the Settling State has brought against Released Entities.

P. "*Covered Conduct*" means any actual or alleged act, failure to act, negligence, statement, error, omission, breach of any duty, conduct, event, transaction, agreement, misstatement, misleading statement or other activity of any kind whatsoever from the beginning of time through the Effective Date (and any past, present or future consequence of any such act, failure to act, negligence, statement, error, omission, breach of duty, conduct, event, transaction, agreement, misstatement, misleading statement or other activity) in any line of business arising from or relating in any way to: (1) the distribution, dispensing, delivery, monitoring, reporting, supply, sale, prescribing, physical security, warehousing, coverage, purchases, reimbursement, discovery, development, manufacture, packaging, repackaging, marketing, promotion, advertising, labeling, recall, withdrawal, and/or any similar act or failure to act related to any Product; the use and/or abuse of any Product; orders, prescriptions, formularies, guidelines, payments and/or rebates for any Product; policies, practices and/or operating procedures, statements, contracts, commercial arrangements, insurance, claim and/or benefit administration, claim adjudication, plan design, data and/or sales thereof, and/or any similar act or failure to act relating to any Product; and/or any system, plan, policy and/or advocacy relating to any Product, including but not limited to unbranded promotion, marketing, programs, and/or campaigns related to any Product and/or class of Products; (2) the characteristics, properties, risks and/or benefits of any Product; (3) the reporting, disclosure, non-reporting and/or non-disclosure to federal, state and/or other regulators of orders and/or prescriptions, theft, diversion and/or any similar conduct related to any Product; (4) the purchasing, selling, acquiring, disposing of, importing, exporting, handling, processing, packaging, supplying, distributing, and/or converting any Product; and (5) controls against diversion, corresponding responsibility, and/or suspicious order monitoring related to any Product.

Q. "*CVS*" means CVS Health Corporation and CVS Pharmacy, Inc. and all of their past and present direct and indirect parents and subsidiaries. For the avoidance of doubt, this definition shall not in any way limit the definition of Released Entities.

R. "*Designated State*" means New York.

S. "*Effective Date*" means fifteen (15) calendar days after the Reference Date.

T. "*Eligible State*" means the states, commonwealths, and territories of the United States of America, but excluding Florida, New Mexico, and West Virginia. Eligible States are listed in Exhibit F-2. The use of non-capitalized "state" to describe something (*e.g.*, "state court") shall also be read to include parallel entities in commonwealths, territories, and the District of Columbia (*e.g.*, "territorial court").

U. "*Enforcement Committee*" means a committee consisting of certain representatives of the Settling States and of the Participating Subdivisions selected and operating pursuant to the organizational bylaws set forth at Exhibit B. Notice pursuant to Section XIII.Q shall be provided when there are changes in membership or contact information.

V. "*Final Order*" means an order or judgment of a court of competent jurisdiction with respect to the applicable subject matter (1) which has not been reversed or superseded by a modified or amended order, is not currently stayed, and as to which any right to appeal or seek *certiorari*, review, reargument, stay, or rehearing has expired, and as to which no appeal or petition for *certiorari*, review, reargument, stay, or rehearing is pending, or (2) as to which an appeal has been taken or petition for *certiorari*, review, reargument, stay, or rehearing has been filed and (a) such appeal or petition for *certiorari*, review, reargument, stay, or rehearing has been resolved by the highest court to which the order or judgment was appealed or from which *certiorari*, review, reargument, stay, or rehearing was sought, or (b) the time to appeal further or seek *certiorari*, review, reargument, stay, or rehearing has expired and no such further appeal or petition for *certiorari*, review, reargument, stay, or rehearing is pending.

W. "*Global Settlement Amount*" means the sum of (a) the Maximum Remediation Payment, (b) the Additional Remediation Amount, and (c) any attorneys' fees and costs set forth in Exhibit R, Exhibit S and Exhibit T.

X. "*Implementation Administrator*" means the vendor agreed to by CVS and the Enforcement Committee and retained by CVS to provide notice pursuant to Section VII.A and to manage the initial joinder period for Subdivisions, including the issuance and receipt of Subdivision Participation Agreements.

Y. "*Incentive C Eligible Subdivisions*" has the meaning set forth in Section IV.H.8.e.

Z. "*Incentive A*" and "*Incentive Payment A*" mean the incentive payment described in Section IV.H.6.

AA. "*Incentive B"* and "*Incentive Payment B*" mean the incentive payment described in Section IV.H.7.

BB. "*Incentive C"* and "*Incentive Payment C*" mean the incentive payment described in Section IV.H.8.

CC. "*Incentive Payment D*" means the incentive payment described in Section IV.H.9.

DD. "*Incentive Payment D Look-Back Dates*" has the meaning set forth in Section IV.H.9.d.

EE. "*Initial Participating Subdivision*" means a Subdivision that meets the requirements set forth in Section VII.D.

FF. "*Initial Subdivision Participation Date*" means ninety (90) calendar days after the Preliminary Agreement Date, unless it is extended by written agreement of CVS and the Enforcement Committee.

GG. "*Injunctive Relief Terms*" means the terms described in Section III and set forth in Exhibit P.

HH. "*Later Litigating Subdivision*" means a Subdivision (or Subdivision official asserting the right of or for the Subdivision to recover for Alleged Harms to the Subdivision and/or the people thereof) that: (1) first files a lawsuit bringing a Released Claim against a Released Entity after the Initial Subdivision Participation Date; or (2) adds a Released Claim against a Released Entity after the Initial Subdivision Participation Date to a lawsuit brought before the Initial Subdivision Participation Date that, prior to the Initial Subdivision Participation Date, did not include any Released Claims against a Released Entity; or (3) (a) was a Litigating Subdivision whose Released Claims against Released Entities were resolved by a legislative Bar or legislative Case-Specific Resolution as of the Initial Subdivision Participation Date, (b) such legislative Bar or legislative Case-Specific Resolution is subject to a Revocation Event after the Initial Subdivision Participation Date, and (c) the earlier of the date of completion of opening statements in a trial in an action brought by a Subdivision in that Settling State that includes a Released Claim against a Released Entity or one hundred eighty (180) days from the Revocation Event passes without a Bar or Case-Specific Resolution being implemented as to that Litigating Subdivision or the Litigating Subdivision's Released Claims being dismissed; or (4) (a) was a Litigating Subdivision whose Released Claims against Released Entities were resolved by a judicial Bar or judicial Case-Specific Resolution as of the Initial Subdivision Participation Date, (b) such judicial Bar or judicial Case-Specific Resolution is subject to a Revocation Event after the Initial Subdivision Participation Date, and (c) such Litigating Subdivision takes any action in its lawsuit asserting a Released Claim against a Released Entity other than seeking a stay or dismissal.

II. "*Later Participating Subdivision*" means a Participating Subdivision that is not an Initial Participating Subdivision, but meets the requirements set forth in Section VII.E.

JJ. "*Litigating Subdivisions*" means all Subdivisions that have brought any Released Claim against any Released Entities as of the Initial Subdivision Participation Date. Attached as Exhibit C is a list of the Litigating Subdivisions in each Eligible State. Exhibit C will be updated (including with any corrections) periodically, and a final version of Exhibit C will be attached hereto as of the Initial Subdivision Participation Date.

KK. "*Maximum Remediation Payment*" means $4,279,160,837, the total amount available to Eligible States for Annual Payments as set forth in Exhibit M-1.[1] The actual amount paid for Annual Payments is subject to reduction from the Maximum Remediation Payment for

[1] The total maximum amount of this settlement is up to $5,022,083,578, which includes (i) up to $4,279,160,837 in the Maximum Remediation Payment; (ii) up to $539,457,124 in Common Benefit and Subdivision Attorneys' Fees, Expenses and Costs; (iii) up to $85,583,217 in the State Outside Counsel Fee Fund, State Cost Fund and Additional Remediation Amount; (iv) a credit of $117,882,400 for CVS's settlements with the state of New Mexico, state of West Virginia, and Nassau County and Suffolk County of New York. In no event shall CVS's payment obligation under this Agreement exceed the sum of (i)-(iii) above ($4,904,201,178).

Non-Settling States, unachieved incentive payments, and as otherwise set forth in this Agreement. In no event shall CVS's total Annual Payments under this Agreement ever exceed the Maximum Remediation Payment.

LL. "*Maximum Annual Remediation Payments*" means the total amount available to Eligible States for Annual Payments in each Payment Year as set forth in the "Total Remediation" column of Exhibit M-1. In no event shall an Annual Payment in Payment Years 1-5 exceed the Maximum Annual Remediation Payment for that Payment Year set forth in Exhibit M-1. For Payment Years 6-10, the Annual Payment may exceed the Maximum Annual Remediation Payment for that Payment Year only to the extent needed for Incentive Payment D for a Settling State that has not earned some or all Incentive Payment C in prior Payment Years, having resulted in correspondingly lower Annual Payments in those prior Payment Years. In no event shall an Annual Payment in Payment Years 6-10 exceed the range set forth in Exhibit M-2 for that Payment Year. For the avoidance of doubt, in no event shall the Annual Payments in Payment Years 6-10 cause CVS's total Annual Payments to exceed the Maximum Remediation Payment.

MM. "*National Arbitration Panel*" means the panel comprised as described in Section VI.F.3.b.

NN. "*National Disputes*" has the meaning set forth in Section VI.F.3.a.

OO. "*Non-Litigating Subdivision*" means any Subdivision that is neither a Litigating Subdivision nor a Later Litigating Subdivision.

PP. "*Non-Litigating Threshold Subdivision*" means (a) all Primary Subdivisions with populations equal to or greater than 30,000 that have not brought a Released Claim against any Released Entity as of the Initial Subdivision Participation Date and (b) any other Primary Subdivisions with populations between 10,000 and 30,000 that have not brought a Released Claim against any Released Entity but have brought a claim related to Products, including any Claims related to the Covered Conduct and/or Alleged Harms, against McKesson, AmerisourceBergen, Cardinal Health, Janssen Pharmaceuticals, or any parents, subsidiaries, divisions, predecessors, successors, and assigns of McKesson, AmerisourceBergen, Cardinal Health, or Janssen Pharmaceuticals. Attached as Exhibit W is a list of the Non-Litigating Threshold Subdivisions in each Eligible State. Exhibit W will be updated (including with any corrections) periodically, and a final version of Exhibit W will be attached hereto as of the Initial Subdivision Participation Date.

QQ. "*Non-Participating Subdivision*" means any Subdivision that is not a Participating Subdivision.

RR. "*Non-Party Covered Conduct Claim*" means a Claim against any Non-Released Entity involving, arising out of, or related to Alleged Harms and/or Covered Conduct (or conduct that would be Covered Conduct if engaged in by a Released Entity).

SS. "*Non-Party Settlement*" means a settlement by any Releasor that settles any Non-Party Covered Conduct Claim and includes a release of any Non-Released Entity.

TT. "*Non-Released Entity*" means an entity that is not a Released Entity.

UU. "*Non-Settling State*" means any Eligible State that is not a Settling State.

VV. "*Opioid Remediation*" means care, treatment, and other programs and expenditures (including reimbursement for past such programs or expenditures[2] except where this Agreement restricts the use of funds solely to future Opioid Remediation) designed to remediate Alleged Harms, including to (1) address the misuse and abuse of opioid products, (2) treat or mitigate opioid use or related disorders, or (3) mitigate other alleged effects of, including on those injured as a result of, the opioid epidemic. Exhibit E provides a non-exhaustive list of expenditures that qualify as being paid for Opioid Remediation. Qualifying expenditures may include reasonable related administrative expenses.

WW. "*Opioid Tax*" means any tax, assessment, surcharge or any other fee (other than a fixed prospective excise tax or similar tax or fee that has no restriction on pass-through) imposed by a Settling State on a pharmacy's ordering or dispensing of opioid products. For the avoidance of doubt, an Opioid Tax shall not include a fee that a retail pharmacy pays to become registered or licensed to operate as a retail pharmacy or to dispense controlled substances in a Settling State, or to renew such a registration or license in a Settling State.

XX. "*Overall Allocation Percentage*" means a Settling State's percentage as set forth in Exhibit F-2. For the avoidance of doubt, the aggregate Overall Allocation Percentage of all Eligible States (including Settling States and Non-Settling States) shall equal one hundred percent (100%).

YY. "*Participating Subdivision*" means any Subdivision in a Settling State that joins the Agreement and meets the requirements for becoming a Participating Subdivision under Section VII.B or Section VII.C, as applicable.

ZZ. "*Participation Percentage of Incentive C Eligible Subdivision Population*" has the meaning set forth in Section IV.H.8.d.

AAA. "*Participation Percentage of Litigating Subdivision Population*" has the meaning set forth in Section IV.H.7.d.

BBB. "*Parties*" means CVS and the Settling States (each, a "*Party*").

CCC. "*Payment Year*" means the calendar year during which the applicable Annual Payment is due pursuant to Section IV.B. Payment Year 1 is 2023, Payment Year 2 is 2024 and so forth. References to payment "*for a Payment Year*" mean the Annual Payment due during that year. References to eligibility "*for a Payment Year*" mean eligibility for Annual Payment during that year.

DDD. "*Preliminary Agreement Date*" has the meaning set forth in Section II.C.

EEE. "*Primary Fire District*" means a fire district that covers a population of 25,000, or 0.20% of an Eligible State's population if an Eligible State's population is greater than 18 million.

[2] Reimbursement includes amounts paid to any governmental entities for past expenditures or programs.

If not easily calculable from state data sources and agreed to between the Eligible State and CVS, a fire district's population is calculated by dividing the population of the county or counties a fire district serves by the number of fire districts in the county or counties. "Primary Fire Districts" shall mean fire districts as identified in connection with the implementation of the July 21, 2021 Janssen Settlement Agreement.

FFF. "*Primary Subdivision*" means any General-Purpose Government (including, but not limited to, a municipality, county, county subdivision, city, town, township, parish, village, borough, gore, or any other entities that provide municipal-type government) with a population over 10,000. Attached as Exhibit I is an agreed list of the Primary Subdivisions in each Eligible State.

GGG. "*Prior Litigating Subdivision*" means a Subdivision (or Subdivision official) that brought any Released Claim against any Released Entity prior to the Initial Subdivision Participation Date and all such Released Claims were separately settled or finally adjudicated prior to the Initial Subdivision Participation Date; *provided, however*, that if the final adjudication was pursuant to a Bar, such Subdivision shall not be considered a Prior Litigating Subdivision. Notwithstanding the prior sentence, CVS and the Settling State of the relevant Subdivision may agree in writing that the Subdivision shall not be considered a Prior Litigating Subdivision.

HHH. "*Product*" means any chemical substance, whether licit or illicit, whether used for medicinal or non-medicinal purposes, and whether natural, synthetic, or semi-synthetic, or any finished pharmaceutical product made from or with such substance, that is (1) an opioid or opiate, as well as any product containing any such substance; (2) a benzodiazepine, a muscle relaxer, carisoprodol, zolpidem, or gabapentin; or (3) a combination or "cocktail" of any stimulant or other chemical substance prescribed, sold, bought, or dispensed to be used together that includes opioids or opiates. "Product" shall include, but is not limited to, any substance consisting of or containing buprenorphine, codeine, fentanyl, hydrocodone, hydromorphone, meperidine, methadone, morphine, oxycodone, oxymorphone, tapentadol, tramadol, opium, heroin, carfentanil, diazepam, estazolam, quazepam, alprazolam, clonazepam, oxazepam, flurazepam, triozolam, temazepam, midazolam, carisoprodol, gabapentin, or any variant of these substances or any similar substance. Notwithstanding the foregoing, nothing in this section prohibits a Settling State from taking administrative or regulatory action related to a benzodiazepine (including, but not limited to, diazepam, estazolam, quazepam, alprazolam, clonazepam, oxazepam, flurazepam, triozolam, temazepam, and midazolam), a muscle relaxer, carisoprodol, zolpidem, or gabapentin that is wholly independent from the use of such drugs in combination with opioids, provided such action does not seek money (including abatement and/or remediation) for conduct prior to the Effective Date.

III. "*Reference Date*" means the date on which CVS is to provide notice to the Settling States and the Enforcement Committee of its determination whether to proceed with this Agreement as required by Section VIII.B. The Reference Date shall be no later than thirty (30) days after the Initial Subdivision Participation Date, unless it is extended by the written agreement of CVS and the Enforcement Committee.

JJJ. "*Released Claims*" means any and all Claims that directly or indirectly are based on, arise out of, or in any way relate to or concern Covered Conduct and/or Alleged Harms occurring prior to the Initial Subdivision Participation Date. Without limiting the foregoing, "Released Claims" include any Claims that have been asserted against the Released Entities by any Settling State or any of its Litigating Subdivisions or Litigating Special Districts in any federal, state or local action or proceeding (whether judicial, arbitral, or administrative) based on, arising out of or relating to, in whole or in part, the Covered Conduct and/or Alleged Harms, or any such Claims that could be or could have been asserted now or in the future in those actions or in any comparable action or proceeding brought by a State, any of its Subdivisions or Special Districts, or any Releasors (whether or not such State, Subdivision, Special District, or Releasor has brought such action or proceeding). Released Claims also include all Claims asserted in any proceeding to be dismissed pursuant to the Agreement, whether or not such claims relate to Covered Conduct and/or Alleged Harms. The Parties intend that "Released Claims" be interpreted broadly. This Agreement does not release Claims by private individuals. It is the intent of the Parties that the use and/or effect of this Agreement in connection with Claims by private individuals be treated in accordance with applicable law. Released Claims is also used herein to describe Claims brought by a Later Litigating Subdivision or other non-party Subdivision that would have been Released Claims if they had been brought by a Releasor against a Released Entity.

KKK. "*Released Entities*" means CVS and (1) all of CVS's past and present direct or indirect parents, subsidiaries, divisions, predecessors, successors, and assigns; (2) the past and present direct or indirect parents, subsidiaries, divisions, predecessors, successors, assigns, and joint ventures of any of the foregoing; (3) all of CVS's insurers (solely in their role as insurers with respect to the Released Claims); (4) all of CVS's, or of any entity described in subsection (1), past and present joint ventures; and (5) the respective past and present officers, directors, members, shareholders (solely in their capacity as shareholders of the foregoing entities), partners, trustees, and employees of any of the foregoing (for actions that occurred during and related to their work for, or employment with, CVS). Any person or entity described in subsections (3)-(5) shall be a Released Entity solely in the capacity described in such clause and shall not be a Released Entity with respect to its conduct in any other capacity. For the avoidance of doubt, any joint venture partner of a joint venture in subsection (2) or (4) is not a Released Entity unless such entity independently falls within subsections (1)-(5) above. An illustrative list of CVS's present joint ventures, subsidiaries, affiliates and predecessor entities is set forth in Exhibit J. With respect to joint ventures (including predecessor entities), only entities listed on Exhibit J are Released Entities. Current or former defendants in *In re: National Prescription Opiate Litigation*, No. 1:17-md-2804 (N.D. Ohio) ("*MDL*") (or in other pending litigation asserting a Claim for Covered Conduct, as identified in the *"National Opiate Litigation – Case and Defendant Extract"* provided to CVS by the Plaintiffs' Executive Committee on November 22, 2022) not identified in Exhibit J are not considered Released Entities, *provided, however*, that any CVS entities that fall within clauses (1)-(5) above against whom Released Claims are brought in the MDL on or after December 9, 2022 shall be considered Released Entities even if not listed on Exhibit J. For the avoidance of doubt, any entity acquired, or joint venture entered into, by CVS before the Initial Subdivision Participation Date is a Released Entity, but any entity acquired, or joint venture entered into, by CVS after the Initial Subdivision Participation Date is not a Released Entity.

LLL. "*Releasors*" means (1) each Settling State; (2) each Participating Subdivision; and (3) without limitation and to the maximum extent of the power of each Settling State's Attorney General and/or Participating Subdivision to release Claims, (a) the Settling State's and Participating Subdivision's departments, agencies, divisions, boards, commissions, Subdivisions, districts, instrumentalities of any kind and attorneys, including its Attorney General, and any person in their official capacity whether elected or appointed to serve any of the foregoing and any agency, person, or other entity claiming by or through any of the foregoing, (b) any public entities, public instrumentalities, public educational institutions, unincorporated districts, fire districts, irrigation districts, water districts, law enforcement districts, emergency services districts, school districts, hospital districts and other Special Districts in a Settling State, and (c) any person or entity acting in a *parens patriae*, sovereign, quasi-sovereign, private attorney general, qui tam, taxpayer, or other capacity seeking relief on behalf of or generally applicable to the general public with respect to a Settling State or Subdivision in a Settling State, whether or not any of them participate in the Agreement. The inclusion of a specific reference to a type of entity in this definition shall not be construed as meaning that the entity is not a Subdivision. Each Settling State's Attorney General represents that he or she has or has obtained (or will obtain no later than the Initial Subdivision Participation Date) the authority set forth in Section XI.G. In addition to being a Releasor as provided herein, a Participating Subdivision shall also provide the Subdivision Participation Agreement referenced in Section VII providing for a release to the fullest extent of the Participating Subdivision's authority.

MMM. "*Remediation Accounts Fund*" means the component of the Settlement Fund described in Section V.E.

NNN. "*Revocation Event*" means, with respect to a Bar, Settlement Class Resolution, or Case-Specific Resolution, a revocation, rescission, reversal, overruling, or interpretation that in any way limits the effect of such Bar, Settlement Class Resolution, or Case-Specific Resolution on Released Claims, or any other action or event that otherwise deprives the Bar, Settlement Class Resolution, or Case-Specific Resolution of force or effect in any material respect.

OOO. "*Settlement Class Resolution*" means a class action resolution in a court of competent jurisdiction in a Settling State (that is not successfully removed to federal court) with respect to a class of Subdivisions in that Settling State that (1) conforms with that Settling State's statutes, case law, and rules of procedure regarding class actions; (2) is approved and entered as an order of a court of competent jurisdiction in that Settling State and such order has become a Final Order; (3) is binding on all Non-Participating Subdivisions in that Settling State (other than opt outs as permitted under the next sentence); (4) provides that all such Non-Participating Subdivisions may not bring any Released Claims against any Released Entities, whether on the ground of this Agreement (or the releases herein) or otherwise; and (5) does not impose any costs or obligations on CVS other than those provided for in this Agreement, or contain any provision inconsistent with any provision of this Agreement. If applicable state law requires that opt-out rights be afforded to members of the class, a class action resolution otherwise meeting the foregoing requirements shall qualify as a Settlement Class Resolution unless Subdivisions collectively representing more than one percent (1%) of the total population of that Settling State opt out. In seeking certification of any Settlement Class, the applicable Settling State and Participating Subdivisions shall make clear that certification is sought solely for settlement

purposes and shall have no applicability beyond approval of the settlement for which certification is sought. Nothing in this Agreement constitutes an admission by any Party that class certification would be appropriate for litigation purposes in any case or for purposes unrelated to this Agreement.

PPP. "*Settlement Fund*" means the interest-bearing fund established pursuant to this Agreement into which the payment under Section IV is made. The Settlement Fund is comprised of the Remediation Accounts Fund, State Fund, and Subdivision Fund.

QQQ. "*Settlement Fund Administrator*" means the entity that determines the payments and reversions due under Section IV and Section IX, including annually determining the Payout Amount and calculating incentive payments, administers the Settlement Fund, and distributes amounts into three sub-funds (the Remediation Accounts Fund, State Fund, and Subdivision Fund) pursuant to this Agreement. The duties of the Settlement Fund Administrator shall be governed by this Agreement. Prior to the Initial Subdivision Participation Date, CVS and the Enforcement Committee shall agree to selection and removal processes for and the identity of the Settlement Fund Administrator, and a detailed description of the Settlement Fund Administrator's duties and responsibilities, including a detailed mechanism for paying the Settlement Fund Administrator's fees and costs, all of which shall be appended to the Agreement as Exhibit L.

RRR. "*Settling State*" means an Eligible State that has entered into this Agreement with CVS and delivers an executed State Participation Form and executed releases in accordance with Section II.A.

SSS. "*State Global Allocation Percentage*" means the allocation percentages for all States as set forth in Exhibit F-1, which represents allocations before adjusting for States that are not Eligible States due to prior settlements with CVS (Florida, New Mexico, and West Virginia).

TTT. "*State Fund*" means the component of the Settlement Fund described in Section V.C.

UUU. "*State Participation Form*" means the form attached as Exhibit V.

VVV. "*State Participation Date*" has the meaning set forth in Section II.A.

WWW. "*State-Subdivision Agreement*" means an agreement that a Settling State reaches with the Subdivisions in that Settling State regarding the allocation, distribution, and/or use of funds allocated to that Settling State and to its Subdivisions. A State-Subdivision Agreement shall be effective if approved pursuant to the provisions of Exhibit O or if adopted by statute. Preexisting agreements addressing funds other than those allocated pursuant to this Agreement shall qualify if the approval requirements of Exhibit O are met. A Settling State and its Subdivisions may revise a State-Subdivision Agreement if approved pursuant to the provisions of Exhibit O, or if such revision is adopted by statute.

XXX. "*Statewide Payment Amount"* means the amount from an Annual Payment to be paid to a Settling State, its separate types of funds (if applicable), and its Participating Subdivision listed on Exhibit G.

YYY. "*Statutory Trust*" means a trust fund established by state law to receive funds allocated to a Settling State's Remediation Accounts Fund and restrict any expenditures made using funds from such Settling State's Remediation Accounts Fund to Opioid Remediation, subject to reasonable administrative expenses. A Settling State may give a Statutory Trust authority to allocate one (1) or more of the three (3) types of funds comprising such State's Settlement Fund, but this is not required.

ZZZ. "*Subdivision*" means any (1) General-Purpose Government (including, but not limited to, a municipality, county, county subdivision, city, town, township, parish, village, borough, gore, or any other entities that provide municipal-type government), School District, or Special District within a Settling State, and (2) any other subdivision, subdivision official (acting in an official capacity on behalf of the subdivision) or sub-entity of or located within a Settling State (whether political, geographical or otherwise, whether functioning or non-functioning, regardless of population overlap, and including, but not limited to, nonfunctioning governmental units and public institutions) that has filed a lawsuit that includes a Released Claim against a Released Entity in a direct, *parens patriae*, or any other capacity. "General-Purpose Government," "School District," and "Special District" shall correspond to the "five basic types of local governments" recognized by the U.S. Census Bureau and match the 2017 list of Governmental Units.[3] The three (3) General-Purpose Governments are county, municipal, and township governments; the two (2) special purpose governments are School Districts and Special Districts.[4] The terms "Fire District," "Health District," "Hospital District," and "Library District" shall correspond to categories of Special Districts recognized by the U.S. Census Bureau.[5] References to a Settling State's Subdivisions or to a Subdivision "in," "of," or "within" such Settling State include Subdivisions located within the Settling State even if they are not formally or legally a sub-entity of such Settling State; *provided*, *however*, that a "health district" that includes any of the following words or phrases in its name shall not be considered a Subdivision: mosquito, pest, insect, spray, vector, animal, air quality, air pollution, clean air, coastal water, tuberculosis, and sanitary.

AAAA. "*Subdivision Allocation Percentage*" means the portion of a Settling State's Subdivision Fund set forth in Exhibit G that a Subdivision will receive pursuant to Section V.C or Section V.D if it becomes a Participating Subdivision. The aggregate Subdivision Allocation Percentage of all Subdivisions receiving a Subdivision Allocation Percentage in each State shall equal one hundred percent (100%). Immediately upon the effectiveness of any State-Subdivision

[3] https://www.census.gov/data/datasets/2017/econ/gus/public-use-files.html.

[4] *E.g.*, U.S. Census Bureau, "Technical Documentation: 2017 Public Use Files for State and Local Government Organization" at 7 (noting that "the Census Bureau recognizes five basic types of local governments," that three of those are "general purpose governments" (county governments, municipal governments, and township governments), and that the other two are "school district and special district governments"), https://www2.census.gov/programs-surveys/gus/datasets/2017/2017_gov_org_meth_tech_doc.pdf.

[5] A list of 2017 Government Units provided by the Census Bureau identifies 38,542 Special Districts and categorizes them by "FUNCTION_NAME." "Govt_Units_2017_Final" spreadsheet, "Special District" sheet, included in "Independent Governments - list of governments with reference information," https://www.census.gov/data/datasets/2017/econ/gus/public-use-files.html. As used herein, "fire district" corresponds to Special District function name "24 – Local Fire Protection," "Health District" corresponds to Special District function name "32 – Health," "Hospital District" corresponds to Special District function name "40 – Hospitals," and "Library District" corresponds to Special District function name "52 – Libraries." *See id.*

Agreement, Allocation Statute, Statutory Trust, or voluntary redistribution allowed by Section V.D.3 (or upon the effectiveness of an amendment to any State-Subdivision Agreement, Allocation Statute, Statutory Trust, or voluntary redistribution allowed by Section V.D.3) that addresses allocation from the Subdivision Fund, whether before or after the Initial Subdivision Participation Date, Exhibit G will automatically be amended to reflect the allocation from the Subdivision Fund pursuant to the State-Subdivision Agreement, Allocation Statute, Statutory Trust, or voluntary redistribution allowed by Section V.D.3. The Subdivision Allocation Percentages contained in Exhibit G may not change once notice is distributed pursuant to Section VII.A, except upon the effectiveness of any State-Subdivision Agreement, Allocation Statute, Statutory Trust, or voluntary redistribution allowed by Section V.D.3 (or upon the effectiveness of an amendment to any State-Subdivision Agreement, Allocation Statute, Statutory Trust, or voluntary redistribution allowed by Section V.D.3) that addresses allocation from the Subdivision Fund. For the avoidance of doubt, no Subdivision not listed on Exhibit G shall receive an allocation from the Subdivision Fund and no provision of this Agreement shall be interpreted to create such an entitlement.

BBBB. "*Subdivision Fund*" means the component of the Settlement Fund described in Section V.C.

CCCC. "*Subdivision Participation Agreement*" means the form of agreement attached as Exhibit K that Participating Subdivisions must execute and return to the Implementation Administrator or Settlement Fund Administrator.

DDDD. "*Threshold Motion*" means a motion to dismiss or equivalent dispositive motion made at the outset of litigation under applicable procedure. A Threshold Motion must include as potential grounds for dismissal any applicable Bar or the relevant release by a Settling State or Participating Subdivision provided under this Agreement and, where appropriate under applicable law, any applicable limitations defense.

EEEE. "*Total Remediation Amount*" means the aggregate amount paid or incurred by CVS hereunder other than amounts paid as attorneys' fees and costs or identified pursuant to Section V.B.2 as being used to pay attorneys' fees, investigation costs or litigation costs.

II. Participation by States and Condition to Preliminary Agreement

A. *Notice to States*. On December 9, 2022, this Agreement shall be distributed to all Eligible States by the Enforcement Committee. The Eligible States' Attorneys General shall then have until December 31, 2022 (the "*State Participation Date*"), to decide whether to become Settling States. Eligible States that determine to become Settling States shall sign a State Participation Form, in the form attached as Exhibit Y, and provide it to CVS and the Enforcement Committee on or before the State Participation Date. The State Participation Date may be extended by the written agreement of CVS and the Enforcement Committee.

B. *Condition to Preliminary Agreement—Settling States' Determination to Proceed*. Following the State Participation Date, the Settling States on the Enforcement Committee shall determine whether enough Eligible States have agreed to become Settling States to proceed with notice to Subdivisions as set forth in Section VII below. The Settling States shall have full, unfettered, and unilateral discretion to abandon the Agreement, without prejudice, should they

determine, based on any criteria or factors they deem relevant, that the Eligible State participation level is insufficient. Within seven (7) calendar days after the State Participation Date, the Settling States shall provide notice to CVS and the Enforcement Committee whether they intend to proceed with the Agreement. Should the Settling States give notice of insufficient Eligible State participation and elect not to proceed, then this Agreement shall have no further effect and all releases, payment obligations, and other commitments or obligations contained herein shall be void.

C. *Condition to Preliminary Agreement—CVS's Determination to Proceed*. If the Settling States elect to proceed, then CVS shall determine whether enough Eligible States have agreed to become Settling States to proceed with notice to Subdivisions as set forth in Section VII below. CVS shall have full, unfettered, and unilateral discretion to abandon the Agreement, without prejudice, should it determine, based on any criteria or factors it deems relevant, that the Eligible State participation level is insufficient. Within seven (7) calendar days after receiving notice of the Settling States' election to proceed pursuant to Section II.B, CVS shall provide notice to the Settling States and the Enforcement Committee whether it intends to proceed with the Agreement. Should CVS give notice of sufficient Eligible State participation and elect to proceed, the date of the notice shall be the Preliminary Agreement Date. Should CVS give notice of insufficient Eligible State participation and elect not to proceed, then this Agreement shall have no further effect and all releases, payment obligations, and other commitments or obligations contained herein shall be void.

D. *Later Joinder by States*. Should the Settling States and CVS elect to proceed with the Agreement, then an Eligible State may become a Settling State after the Preliminary Agreement Date only with the consent of CVS, in its sole discretion. If an Eligible State becomes a Settling State more than sixty (60) calendar days after the Preliminary Agreement Date, but on or before May 31, 2023, then the Subdivisions in that Eligible State that become Participating Subdivisions within ninety (90) calendar days of that Eligible State becoming a Settling State shall be considered Initial Participating Subdivisions. An Eligible State may not become a Settling State after May 31, 2023.

E. *Litigation Activity*. Following the State Participation Date, Eligible States that determine to become Settling States shall make reasonable efforts to cease all litigation activity against the Released Entities, including by jointly seeking stays or severance of Claims against Released Entities, where feasible, and otherwise to minimize such activity by means of agreed deadline extensions and agreed postponement of depositions, document productions, and motion practice if a motion to stay or sever is not feasible or is denied.

III. Injunctive Relief

A. *Injunctive Relief*. As part of the Consent Judgments, the Parties agree to the entry of the injunctive relief terms as set forth in Exhibit P.

IV. Settlement Payments

A. *Settlement Fund.* All payments under this Section IV shall be made into the Settlement Fund, except that, where specified, they shall be made into the Settlement Fund Escrow. The Settlement Fund shall be allocated and used only as specified in Section V.

B. *Annual Payments by CVS.*

1. CVS shall make ten (10) Annual Payments, each comprised of base payments and incentive payments as provided in this Section IV and Exhibit M-1; *provided that* the Annual Payment in Payment Year 1 shall consist solely of base payments. As a result, and as set forth in Exhibit M-1, base payments in Payment Years 2 through 10 are less than base payments in Payment Year 1 to ensure they do not exceed thirty-eight percent (38%) of each Settling State's allocable share of the Maximum Remediation Amount.

2. In no instance shall CVS's Annual Payment obligation exceed the Maximum Annual Remediation Payments, reduced for Non-Settling States, except as specified in the definition of "Maximum Annual Remediation Payments" for Payment Years 6-10. In no instance shall the sum of CVS's Annual Payment obligations exceed the Maximum Remediation Payment, reduced for Non-Settling States.

C. *Settlement Fund Payment Process*

1. To determine each Annual Payment for Payment Year 2 forward, the Settlement Fund Administrator shall use the data as of April 30 of the Payment Year for each Annual Payment, unless another provision of the Agreement specifies a different date. Prior to the Effective Date, the Parties will include an exhibit to the Agreement setting forth in detail the process for the Settlement Fund Administrator obtaining relevant data and for distributing funds to Settling States and Participating Subdivisions listed on Exhibit G consistent with the terms of this Agreement as quickly as practical.

2. The Settlement Fund Administrator shall determine the Annual Payment and the Statewide Payment Amount for each Settling State, consistent with the provisions in Exhibit L, by:

a. determining, for each Settling State, the amount of base payments and incentive payments to which the State is entitled by applying the criteria in this Section;

b. applying any reductions or offsets required by Section IV and Section XII; and

c. determining the total amount owed by CVS to all Settling States and Participating Subdivisions listed on Exhibit G.

3. As soon as possible, but no later than forty-five (45) days prior to the Payment Date, the Settlement Fund Administrator shall give notice to CVS, the Settling

States, and the Enforcement Committee of the amount of the Annual Payment, and the Statewide Payment Amount for each Settling State, following the determination described in Section IV.C.2, and the following timeline shall apply:

a. Within twenty-one (21) days of the notice provided by the Settlement Fund Administrator, CVS, any Settling State or the Enforcement Committee may dispute, in writing, the calculation of the Annual Payment, or the Statewide Payment Amount for a Settling State. Such disputing party must provide a written notice of dispute to the Settlement Fund Administrator, the Enforcement Committee, any affected Settling State, and CVS identifying the nature of the dispute, the amount of money that is disputed, and the Settling State(s) affected.

b. Within twenty-one (21) days of the sending of a written notice of dispute, any affected party may submit a response, in writing, to the Settlement Fund Administrator, the Enforcement Committee, any affected Settling State, and CVS identifying the basis for disagreement with the notice of dispute.

c. If no response is filed, the Settlement Fund Administrator shall adjust the amount calculated consistent with the written notice of dispute, and CVS shall pay the adjusted amount as the Annual Payment on the Payment Date. If a written response to the written notice of dispute is timely sent to the Settlement Fund Administrator, the Settlement Fund Administrator shall notify CVS of the preliminary amount to be paid, which shall be the greater of the amount originally calculated by the Settlement Fund Administrator or the amount that would be consistent with the notice of dispute, *provided, however,* that in no circumstances shall the preliminary amount to be paid be higher than the Maximum Annual Payment. For the avoidance of doubt, a transfer of payments from the Settlement Fund Escrow for other Payment Years does not count toward determining whether the amount to be paid is higher than the Maximum Annual Remediation Payments.

d. The Settlement Fund Administrator shall place any disputed amount of the preliminary amount paid by CVS into the Settlement Fund Escrow and shall disburse any undisputed amount to each Settling State and its Participating Subdivisions listed on Exhibit G.

e. At any time before the Payment Date for an Annual Payment, CVS and the Enforcement Committee may agree on the amount of the Annual Payment and the Statewide Payment Amount for each Settling State. If such agreement is reached, CVS and the Enforcement Committee shall inform the Settlement Fund Administrator, and the Settlement Fund Administrator shall treat those amounts as the determination described in Section IV.C.2.

4. If a Settling State informs the Settlement Fund Administrator that it and its Participating Subdivisions listed on Exhibit G have reached consensus on the amount of its Statewide Payment Amount, determined pursuant to Section IV.C.2 or Section IV.C.3, to be distributed to the Settling State, among its separate types of funds (if applicable), and among its Participating Subdivisions listed on Exhibit G, the Settlement Fund

Administrator shall disburse the Statewide Payment Amount pursuant to the consensus distribution amounts provided by the Settling State. For a Settling State that does not so notify the Settlement Fund Administrator, the Settlement Fund Administrator shall allocate the Settling State's Statewide Payment Amount, pursuant to Section V, among the separate types of funds for the Settling State (if applicable), and among its Participating Subdivisions listed on Exhibit G using the following procedures:

a. As soon as possible for each payment and following the determination described in Section IV.C.2 or Section IV.C.3, the Settlement Fund Administrator shall give notice to the relevant Settling States and their Participating Subdivisions listed on Exhibit G of the amount to be received by each Settling State, the amount to be received by the separate types of funds for each Settling State (if applicable), and the amount to be received by each Participating Subdivision listed on Exhibit G for each Settling State.

b. Within twenty-one (21) days of the notice provided by the Settlement Fund Administrator, any Settling State or Participating Subdivision listed on Exhibit G may dispute, in writing, the calculation of the amount to be received by the relevant Settling State and/or its Participating Subdivision listed on Exhibit G. A dispute will be deemed invalid and disregarded if it challenges the allocations adopted by a State-Subdivision Agreement approved pursuant to the provisions of Exhibit O or by statute. Such disputing party must provide a written notice of dispute to the Settlement Fund Administrator, any affected Settling State, and any affected Participating Subdivision identifying the nature of the dispute, the amount of money that is disputed, and the Settling State(s) affected.

c. Within twenty-one (21) days of the sending of a written notice of dispute, any affected Settling State or any affected Participating Subdivision may submit a response, in writing, to the Settlement Fund Administrator, any affected Settling State and any affected Participating Subdivision identifying the basis for disagreement with the notice of dispute.

d. If no response is filed, the Settlement Fund Administrator shall adjust the amount calculated consistent with the written notice of dispute.

e. The Settlement Fund Administrator shall place any disputed amount into the Settlement Fund Escrow and shall disburse any undisputed amount to the Settling State and its Participating Subdivisions eligible for payment.

5. Disputes described in this subsection (other than those for which no response is filed under Section IV.C.3.c or Section IV.C.4.d) shall be resolved in accordance with the terms of Section VI.

6. The Settlement Fund Administrator may combine the disbursements of Annual Payments with disbursement of funds under other comparable opioid settlements. In determining when disbursements for each Annual Payment will be made, the Settlement Fund Administrator may take into account the timeline for the availability of disbursements

under other comparable opioid settlements. No such disbursement determinations by the Settlement Fund Administrator shall impact in any respect the amount, composition, or determination of an Annual Payment under this Agreement or CVS's obligations under this Agreement.

7. For the avoidance of doubt, Subdivisions not listed on Exhibit G shall not receive and are not eligible to receive an allocation from the Subdivision Fund and no provision of this Agreement shall be interpreted to create such an entitlement.

D. *Payment Date and Procedure for Annual Payment in Payment Year 1.* The procedure described in Section IV.C.2 and Section IV.C.3 for determining the amount of the Annual Payment shall not apply to Payment Year 1. The procedure in lieu of Section IV.C.2 and Section IV.C.3 for determining the amount of the Annual Payment for Payment Year 1 is as set forth here. The Payment Date for Payment Year 1 is June 30, 2023 or the Effective Date, whichever is later. On or before such date, and *provided that* the conditions set forth in Section II.B, Section II.C, Section VIII.B, and Section VIII.C have been satisfied, CVS shall deposit into the Settlement Fund the Maximum Annual Remediation Payment for Payment Year 1 as specified in Exhibit M-1 (which, again, shall consist only of base payments). The excess amount paid in Payment Year 1—including without limitation any amounts allocable to Non-Settling States—shall be deducted from the Annual Payment for Payment Year 2, along with any other deductions or reductions to the Annual Payment for Payment Year 2.

E. *Payment Date for Payment Years 2 through 10.* The Payment Date for Payment Years 2 through 10 is June 30 of each Payment Year or thirty (30) calendar days from when the Settlement Fund Administrator gives notice to CVS of the amount of the Annual Payment for a Payment Year, whichever is later. The Annual Payments for those Payment Years shall be made pursuant to the process set forth in Section IV.C.

F. *Offsets to Annual Payments to the Settlement Fund for Non-Settling States.* An offset equal to the Maximum Remediation Payment of $4,279,160,837 times the Overall Allocation Percentage assigned to each Non-Settling State in Exhibit F-2 shall be deducted from the total amount to be paid by CVS to the Settlement Fund. Non-Settling States shall not be eligible for any payments or have any rights in connection with this Agreement. Accordingly, the Maximum Annual Remediation Payments specified in Exhibit M-1 are reduced by the aggregate Overall Allocation Percentage of Non-Settling States as set forth in Exhibit F-2.

G. *Base Payments.*

1. CVS shall make base payments into the Settlement Fund in an amount equal to thirty-eight percent (38%) of the Maximum Remediation Payment of $4,279,160,837 minus any offsets for Non-Settling States specified in Section IV.F. The maximum total for base payments is $1,626,081,118. The base payments shall be due in annual installments consistent with Exhibit M-1 over the ten (10) Payment Years, subject to potential offsets for Non-Settling States as provided in Section IV.F.

2. Each Settling State's total base payments for all Payment Years shall not exceed thirty-eight percent (38%) of each Settling State's Overall Allocation Percentage times the Maximum Remediation Payment.

3. The base payment for any Settling State in each Payment Year shall be the base payment for that Payment Year specified in Exhibit M-1 times the Settling State's Overall Allocation Percentage specified in Exhibit F-2.

H. *Incentive Payments.*

1. CVS shall make potential incentive payments into the Settlement Fund, totaling up to a maximum of sixty-two percent (62%) of the Maximum Remediation Payment of $4,279,160,837, minus any offsets for Non-Settling States specified in Section IV.F, with the actual incentive payment amount depending on whether and the extent to which the criteria set forth below are met in each Settling State. The potential maximum total for incentive payments is and cannot exceed $2,653,079,719.

2. A Settling State qualifies to receive incentive payments in addition to base payments if it meets the incentive eligibility requirements specified below. The maximum total Incentive Payment for any Settling State shall be no more than the maximum total for incentive payments listed in Section IV.H.1 times the Settling State's Overall Allocation Percentage specified in Exhibit F-2. Incentive payments are state-specific, with the actual amount depending on whether and the extent to which the criteria set forth below are met in such Settling State.

3. The incentive payments shall be available from four (4) categories, referred to as Incentive Payments A, B, C, and D. Incentive Payments A, B, and C will be due in annual installments over the nine (9) Payment Years beginning with Payment Year 2, and Incentive Payment D will be due in installments over five (5) years beginning with Payment Year 6, as shown on Exhibit M-1. The total amount of incentive payments in an Annual Payment shall be the sum of the incentive payments for which individual Settling States are eligible for that Payment Year under the criteria set forth below. The incentive payments shall be determined with respect to a specific Settling State based on its eligibility for that Payment Year under the criteria set forth below. For the avoidance of doubt, eligibility for Incentive Payments A, B, C, and D shall be determined on a Settling State-by-Settling State basis and for each Payment Year as set forth below. Except to the limited extent provided below for Incentives A (see Section IV.H.6.c) and D (see Section IV.H.9.j), a Settling State may not earn and shall not be paid in any later Payment Year an annual incentive payment for a prior Payment Year, or any portion thereof, that it failed to qualify for in that prior Payment Year.

4. A Settling State may either qualify for Incentive Payment A, or it can alternatively qualify for Incentive Payments B, C, and/or D. A Settling State will be eligible for its full allocable share of the maximum amount available for incentive payments by either (a) achieving Incentive Payment A within two (2) years of the Effective Date or (b) by fully earning Incentive Payment B in each Payment Year it is available and

earning Incentive Payments C and D in a manner that produces that maximum possible combined amount from those two incentives.

5. The following time periods apply to Incentive Payments B and C:

a. Period 1: Zero to two hundred ten (210) days after the Effective Date.

b. Period 2: Two hundred eleven (211) days to one year after the Effective Date.

c. Period 3: One year and one day after the Effective Date to April 30, 2027.

6. Incentive Payment A.

a. Incentive Payment A is mutually exclusive with Incentive Payments B, C, and D; if a Settling State receives Incentive Payment A in an Annual Payment, such Settling State is not eligible for Incentive Payments B, C, or D in that Annual Payment.

b. Incentive Payment A shall be up to a maximum of sixty-two percent (62%) of the Maximum Remediation Payment of $4,279,160,837, minus any offsets for Non-Settling States specified in Section IV.F, with the actual amount depending on whether and the extent to which the criteria set forth below are met in each Settling State. The potential maximum total for Incentive Payment A is $2,653,079,719.

c. The Incentive Payment A for any Settling State in each Payment Year shall be the Incentive Payment A for that Payment Year specified in Exhibit M-1 times the Settling State's Overall Allocation Percentage specified in Exhibit F-2, provided such Settling State achieves Incentive Payment A by two (2) years after the Effective Date. If a Settling State achieves Incentive Payment A after April 30, 2024 but before two (2) years after the Effective Date, it shall receive a catch-up payment as part of the next Annual Payment for the difference between what it would have earned had it qualified for Incentive Payment A for Payment Year 2 and what it was actually paid for Payment Year 2. The Settlement Fund Administrator shall decrease the catch-up payments payable pursuant to this Section IV.H.6.c to the extent they cannot be paid without exceeding an applicable payment limit shown in Exhibit M-1 for the next Payment Year.

d. A Settling State is eligible for Incentive Payment A if: (i) there is a Bar in that State in full force and effect; (ii) there is a Settlement Class Resolution in that State in full force and effect; (iii) there is a ruling from the State's highest court barring all Subdivisions from bringing or maintaining Released Claims; (iv) the Released Claims of all of the following entities are released through the execution of Subdivision Participation Agreements: (1) all Litigating Subdivisions,

(2) all Non-Litigating Primary Subdivisions, (3) all non-litigating School Districts with a K-12 student enrollment of at least 25,000 or 0.10% of a State's population, whichever is greater, (4) all non-litigating health districts and hospital districts that have at least one hundred twenty-five (125) hospital beds in one or more hospitals rendering services in that district, and (5) all Primary Fire Districts; or (v) a combination of the actions in clauses (i)-(iv) has achieved the same level of resolution of Claims by Subdivisions (*e.g.*, a Bar against future litigation combined with full joinder by Litigating Subdivisions). For the avoidance of doubt, subsection (iv) cannot be satisfied unless all Litigating Subdivisions are Participating Subdivisions or there is a Case-Specific Resolution against any such Subdivisions that are not Participating Subdivisions.

e. A Settling State that does not achieve Incentive Payment A as of two (2) years after the Effective Date shall not be eligible for, and shall not receive, Incentive Payment A for any Payment Year.

f. CVS shall acknowledge on or before the Initial Subdivision Participation Date the sufficiency of any existing Bars in Settling States, provided that such States shall have provided no less than 30 days' notice to CVS of such Bars. Any other Settling State that believes it qualifies for Incentive Payment A by two (2) years after the Effective Date shall provide prompt notice to CVS, the Enforcement Committee, and the Settlement Fund Administrator, including data sources or other information establishing such Settling State's entitlement to Incentive Payment A. CVS and the Enforcement Committee shall meet and confer in order to agree on data sources for purposes of this Section prior to the Preliminary Agreement Date.

g. If CVS made a payment under Incentive Payment A solely on the basis of a Bar or Settlement Class Resolution in a Settling State and that Bar or Settlement Class Resolution is subsequently subject to a Revocation Event, that Settling State shall not be eligible for Incentive Payment A thereafter, unless the State requalifies for Incentive Payment A through any method pursuant to Section IV.H.6.d, in which case the Settling State shall be eligible for Incentive Payment A less any litigation fees and costs incurred by CVS in the interim, except that, if the re-imposition occurs after the completion of opening statements in a trial involving a Released Claim, the Settling State shall not be eligible for Incentive Payment A (unless this exception is waived by CVS).

7. Incentive Payment B.

a. Incentive Payment B shall be available to Settling States that do not qualify for Incentive Payment A.

b. Incentive Payment B shall be up to a potential maximum of twenty-eight percent (28%) of the Maximum Remediation Payment of $4,279,160,837 minus any offsets for Non-Settling States specified in Section IV.F, with the actual amount depending on whether and the extent to which the criteria set forth below

are met in each Settling State. The potential maximum total for Incentive Payment B is $1,198,165,035.

c. The potential maximum Incentive Payment B for any Settling State in each Payment Year shall be the Incentive Payment B for that Payment Year specified in Exhibit M-1 times the Settling State's Overall Allocation Percentage specified in Exhibit F-2, provided such Settling State becomes eligible for Incentive Payment B by April 30 of the Payment Year or April 30, 2027, whichever is earlier. The Incentive Payment B for any Settling State that qualifies for Incentive Payment B is subject to reduction in accordance with Section IV.H.7.f, Section IV.H.7.g, and Section IV.H.7.h.

d. For Payment Years 2 through 5, the calculations specified by this Section IV.H.7 shall be based on a Settling State's Participation Percentage of Litigating Subdivision Population[6] as of April 30 of that Payment Year. For Payment Years 6 through 10, the calculations specified by this Section IV.H.7 shall be based on a Settling State's Participation Percentage of Litigating Subdivision Population as of April 30, 2027.

e. A Settling State qualifies for an Incentive Payment B if Litigating Subdivisions collectively representing at least eighty-five percent (85%) of the Settling State's Litigating Subdivision population are either Participating Subdivisions or have their Claims resolved through Case-Specific Resolutions.

f. Within Period 1: If Litigating Subdivisions collectively representing at least eighty-five percent (85%) of a Settling State's Litigating Subdivision population are Participating Subdivisions, or have their Claims resolved through Case-Specific Resolutions, during Period 1, then a sliding scale will determine the share of the Settling State's maximum Incentive Payment B for a Payment Year that it has earned. Under that sliding scale, if Litigating Subdivisions collectively representing eighty-five percent (85%) of a Settling State's Litigating Subdivision population become Participating Subdivisions, or achieve Case-Specific Resolution status, by the end of Period 1, a Settling State will receive twenty percent (20%) of its maximum Incentive Payment B for each Payment Year. If more Litigating

[6] The "Participation Percentage of Litigating Subdivision Population" shall be determined by the aggregate population of a Settling State's Litigating Subdivisions (including without limitation School Districts and Special Districts) that are Participating Subdivisions, or have their Claims resolved through Case-Specific Resolutions, divided by the aggregate population of that Settling State's Litigating Subdivisions (including without limitation School Districts and Special Districts). In calculating the Settling State's population that resides in Litigating Subdivisions, the population of the Settling State's Litigating Subdivisions shall be the sum of the population of all Litigating Subdivisions in the Settling State, notwithstanding that persons may be included within the population of more than one Litigating Subdivision. An individual Litigating Subdivision shall not be included more than once in the numerator, and shall not be included more than once in the denominator, of the calculation regardless if it (or any of its officials) is named as multiple plaintiffs in the same lawsuit; *provided*, *however*, that for the avoidance of doubt, no Litigating Subdivision will be excluded from the numerator or denominator under this sentence unless a Litigating Subdivision otherwise counted in the denominator has the authority to release the Claims (consistent with Section XI) of the Litigating Subdivision to be excluded.

Subdivisions become Participating Subdivisions, or achieve Case-Specific Resolution status, the Settling State shall receive an increased percentage of the maximum Incentive Payment B for each Payment Year as shown in the table below.

Participation Percentage of Litigating Subdivision Population	**Incentive Payment B Percentage**
Participation of less than 85%	Payment of 0% of Incentive B
Participation of 85% but less than 86%	Payment of 20% of Incentive B
Participation of 86% but less than 87%	Payment of 30% of Incentive B
Participation of 87% but less than 88%	Payment of 33% of Incentive B
Participation of 88% but less than 89%	Payment of 36% of Incentive B
Participation of 89% but less than 90%	Payment of 40% of Incentive B
Participation of 90% but less than 91%	Payment of 43% of Incentive B
Participation of 91% but less than 92%	Payment of 46% of Incentive B
Participation of 92% but less than 93%	Payment of 50% of Incentive B
Participation of 93% but less than 94%	Payment of 55% of Incentive B
Participation of 94% but less than 95%	Payment of 58% of Incentive B
Participation of 95% but less than 96%	Payment of 60% of Incentive B
Participation of 96% but less than 97%	Payment of 70% of Incentive B
Participation of 97% but less than 98%	Payment of 75% of Incentive B
Participation of 98% but less than 99%	Payment of 85% of Incentive B
Participation of 99% but less than 100%	Payment of 95% of Incentive B
Participation of 100%	Payment of 100% of Incentive B

g. Within Period 2: If a Settling State did not qualify for Incentive Payment B in Period 1, but Litigating Subdivisions collectively representing at least eighty-five percent (85%) of the Settling State's Litigating Subdivision population become Participating Subdivisions, or achieve Case-Specific Resolution status, by the end of Period 2, then the Settling State qualifies in each Payment Year for seventy-five percent (75%) of the Incentive Payment B it would have qualified for in Period 1. If a Settling State qualifies for Incentive Payment B in Period 1 and increases its Participation Percentage of Litigating Subdivision Population in Period 2, the additional Incentive Payment B for each Payment Year shall be eighty-seven and one-half percent (87.5%) of the difference between (i) the Incentive Payment B calculated pursuant to Section IV.H.7.f in Period 2 and (ii) the Incentive Payment B calculated pursuant to Section IV.H.7.f at the end of Period 1.

h. Within Period 3: If a Settling State did not qualify for an Incentive Payment B in Periods 1 or 2, but Litigating Subdivisions collectively representing at least eighty-five percent (85%) of the Settling State's Litigating Subdivision population become Participating Subdivisions, or achieve Case-Specific Resolution status, by the end of Period 3, then the Settling State qualifies for fifty percent (50%) of the Incentive Payment B it would have qualified for in Period 1. If a

Settling State qualifies for Incentive Payment B in Period 2 and increases its Participation Percentage of Litigating Subdivision Population in Period 3, the additional Incentive Payment B in each Payment Year shall be seventy-five percent (75%) of the difference between (i) the Incentive Payment B calculated pursuant to Section IV.H.7.f in Period 3 and (ii) the Incentive Payment B calculated pursuant to Section IV.H.7.f at the end of Period 2.

i. For the avoidance of doubt, an increase in a Settling State's Participation Percentage of Litigating Subdivision Population in Periods 2 and/or 3 from an earlier Period entitles the Settling State to receive the Incentive Payment B Percentage it had earned as of the end of the earlier Period plus the additional Incentive Payment B Percentage specified by the calculations in Section IV.H.7.g and Section IV.H.7.h.

j. If a Settling State has not qualified for Incentive Payment B by April 30, 2027, it shall no longer be eligible to qualify for and shall not receive any Incentive Payment B for any Payment Year.

k. If there are no Litigating Subdivisions in a Settling State, and that Settling State is otherwise eligible for Incentive Payment B, that Settling State will receive its maximum Incentive Payment B for that Annual Payment provided by Section IV.H.7.c.

8. Incentive Payment C.

a. Incentive Payment C shall be available to Settling States that do not qualify for Incentive Payment A.

b. Incentive Payment C shall be equal to up to a potential maximum of twenty-eight percent (28%) of the Maximum Remediation Payment of $4,279,160,837 minus any offsets for Non-Settling States specified in Section IV.F, with the actual amount depending on whether and the extent to which the criteria set forth below are met in each Settling State. The potential maximum total for Incentive Payment C is $1,198,165,035.

c. The potential maximum Incentive Payment C for any Settling State in each Payment Year shall be the Incentive Payment C for that Payment Year specified in Exhibit M-1 times the Settling State's Overall Allocation Percentage specified in Exhibit F-2, provided such Settling State becomes eligible for Incentive Payment B by April 30 of the Payment Year or April 30, 2027, whichever is earlier. The maximum Incentive Payment C for any Settling State that qualifies for Incentive Payment C is subject to reduction in accordance with Section IV.H.8.f, Section IV.H.8.g, and Section IV.H.8.h.

d. For Payment Years 2 through 5, the calculations specified by this Section IV.H.8 shall be based on the participation percentage of a Settling State's Non-Litigating Threshold population and its Litigating Subdivision population

("*Participation Percentage of Incentive C Eligible Subdivision Population*")[7] as of April 30 of that Payment Year. For Payment Years 6 through 10, the calculations specified by this Section IV.H.8 shall be based on a Settling State's Participation Percentage of Incentive C Eligible Subdivision Population as of April 30, 2027.

e. Incentive Payment C shall be available depending on the percentage of the aggregate population of a Settling State's Non-Litigating Threshold Subdivisions and Litigating Subdivisions (including without limitation School Districts and Special Districts) that are Participating Subdivisions or have their Claims resolved through Case-Specific Resolutions (the "*Incentive C Eligible Subdivisions*"). A Settling State qualifies for an Incentive Payment C if Incentive C Eligible Subdivisions collectively representing at least eighty-five percent (85%) of the Settling State's Incentive C Eligible Subdivision population are either Participating Subdivisions or have their Claims resolved through Case-Specific Resolutions.

f. Within Period 1: If Incentive C Eligible Subdivisions collectively representing at least eighty-five percent (85%) of a Settling State's Incentive C Eligible Subdivision population are Participating Subdivisions, or have their Claims resolved through Case-Specific Resolutions, during Period 1, then a sliding scale will determine the share of the Settling State's maximum Incentive Payment C for a Payment Year that it has earned. Under that sliding scale, if Incentive C Eligible Subdivisions collectively representing eighty-five percent (85%) of a Settling State's Incentive C Eligible population become Participating Subdivisions or achieve Case-Specific Resolution status by the end of Period 1, a Settling State will receive twenty percent (20%) of its maximum Incentive Payment C for each Payment Year. If more Incentive C Eligible Subdivisions become Participating Subdivisions, or achieve Case-Specific Resolution status, the Settling State shall receive an increased percentage of the maximum Incentive Payment C for each Payment Year as shown in the table below.

[7] The "Participation Percentage of Incentive C Eligible Subdivision Population" shall be determined by the aggregate population of a Settling State's Non-Litigating Threshold Subdivisions and Litigating Subdivisions (including without limitation School Districts and Special Districts) that are Participating Subdivisions, or have their Claims resolved through Case-Specific Resolutions, divided by the aggregate population of that Settling State's Non-Litigating Threshold Subdivisions and Litigating Subdivisions (including without limitation School Districts and Special Districts). In calculating the Settling State's population that resides in Non-Litigating Threshold Subdivisions and Litigating Subdivisions, the population of the Settling State's Non-Litigating Threshold Subdivisions and Litigating Subdivisions shall be the sum of the population of all Non-Litigating Threshold Subdivisions and Litigating Subdivisions in the Settling State, notwithstanding that persons may be included within the population of more than one Non-Litigating Threshold Subdivisions and Litigating Subdivision. An individual Non-Litigating Threshold Subdivisions or Litigating Subdivision shall not be included more than once in the numerator, and shall not be included more than once in the denominator, of the calculation regardless if it (or any of its officials) is named as multiple plaintiffs in the same lawsuit; *provided, however*, that for the avoidance of doubt, no Non-Litigating Threshold Subdivision or Litigating Subdivision will be excluded from the numerator or denominator under this sentence unless a Non-Litigating Threshold Subdivision or Litigating Subdivision otherwise counted in the denominator has the authority to release the Claims (consistent with Section XI) of the Non-Litigating Threshold Subdivision or Litigating Subdivision to be excluded.

Participation Percentage of Incentive C Eligible Subdivision Population	**Incentive Payment C Percentage**
Participation of less than 85%	Payment of 0% of Incentive C
Participation of 85% but less than 86%	Payment of 20% of Incentive C
Participation of 86% but less than 87%	Payment of 30% of Incentive C
Participation of 87% but less than 88%	Payment of 33% of Incentive C
Participation of 88% but less than 89%	Payment of 36% of Incentive C
Participation of 89% but less than 90%	Payment of 40% of Incentive C
Participation of 90% but less than 91%	Payment of 43% of Incentive C
Participation of 91% but less than 92%	Payment of 46% of Incentive C
Participation of 92% but less than 93%	Payment of 50% of Incentive C
Participation of 93% but less than 94%	Payment of 55% of Incentive C
Participation of 94% but less than 95%	Payment of 58% of Incentive C
Participation of 95% but less than 96%	Payment of 60% of Incentive C
Participation of 96% but less than 97%	Payment of 70% of Incentive C
Participation of 97% but less than 98%	Payment of 75% of Incentive C
Participation of 98% but less than 99%	Payment of 85% of Incentive C
Participation of 99% but less than 100%	Payment of 95% of Incentive C
Participation of 100%	Payment of 100% of Incentive C

g. Within Period 2: If a Settling State did not qualify for Incentive Payment C in Period 1, but Incentive C Eligible Subdivisions collectively representing at least eighty-five percent (85%) of the Settling State's Incentive C Eligible Subdivision population become Participating Subdivisions, or achieve Case-Specific Resolution status, by the end of Period 2, then the Settling State qualifies in each Payment Year for seventy-five percent (75%) of the Incentive Payment C it would have qualified for in Period 1. If a Settling State qualifies for Incentive Payment C in Period 1 and increases its Participation Percentage of Incentive C Eligible Subdivision Population in Period 2, the additional Incentive Payment C for each Payment Year shall be eighty-seven and one-half percent (87.5%) of the difference between (i) the Incentive Payment C calculated pursuant to Section IV.H.8.f in Period 2 and (ii) the Incentive Payment C calculated pursuant to Section IV.H.8.f at the end of Period 1.

h. Within Period 3: If a Settling State did not qualify for an Incentive Payment C in Periods 1 or 2, but Incentive C Eligible Subdivisions collectively representing at least eighty-five percent (85%) of the Settling State's Incentive C Eligible Subdivision population become Participating Subdivisions, or achieve Case-Specific Resolution status, by the end of Period 3, then the Settling State qualifies for fifty percent (50%) of the Incentive Payment C it would have qualified for in Period 1. If a Settling State qualifies for Incentive Payment C in Period 2 and increases its Participation Percentage of Incentive C Eligible Subdivision Population in Period 3, the additional Incentive Payment B in each Payment Year shall be seventy-five percent (75%) of the difference between (i) the Incentive

Payment B calculated pursuant to Section IV.H.8.f in Period 3 and (ii) the Incentive Payment B calculated pursuant to Section IV.H.8.f at the end of Period 2.

i. For the avoidance of doubt, an increase in a Settling State's Participation Percentage of Incentive C Eligible Subdivision Population in Periods 2 and/or 3 from an earlier Period entitles the Settling State to receive the Incentive Payment C Percentage it had earned as of the end of the earlier Period plus the additional Incentive Payment C Percentage specified by the calculations in Section IV.H.8.g and Section IV.H.8.h.

j. If a Settling State has not qualified for Incentive Payment C by April 30, 2027, it shall no longer be eligible to qualify for and shall not receive any Incentive Payment C for any Payment Year.

k. If there are no Incentive C Eligible Subdivisions in a Settling State, and that Settling State is otherwise eligible for Incentive Payment C, that Settling State will receive its maximum Incentive Payment C for that Annual Payment provided by Section IV.H.8.c.

9. Incentive Payment D.

a. Incentive Payment D shall be available to Settling States that do not qualify for Incentive Payment A.

b. Incentive Payment D shall be equal to up to a potential maximum of fifteen percent (15%) of the Maximum Remediation Payment of $4,279,160,837 minus any offsets for Non-Settling States specified in Section IV.F, with the actual amount depending on whether and the extent to which the criteria set forth below are met in each Settling State. The potential maximum total for Incentive Payment D is $641,874,126.[8]

c. Incentive Payment D shall be available to be earned starting at Payment Year 6 and the amount of Incentive Payment D in Payment Years 6-10 will depend on (i) the Settling State's eligibility as set out in Section IV.H.9.d and (ii) the Participation Percentage of the Incentive C Eligible Subdivision Population achieved by the Settling State as of April 30, 2027.

d. A Settling State is eligible for Incentive Payment D if no Later Litigating Subdivision (for purposes of Incentive Payment D, Later Litigating Subdivisions are limited to (i) a Primary Subdivision; (ii) a school district with a K-12 student enrollment of at least 25,000 or 0.10% of the State's population, whichever is greater; (iii) a health district or hospital district that has at least one

[8] The Incentive Payment C table specified in Section IV.H.8.f and Incentive Payment D table specified in Section IV.H.9.e operate so that the combined amount of Incentive Payment C and Incentive Payment D cannot exceed thirty-four percent (34%) of the Maximum Remediation Payment over the term of the Agreement. CVS will have no obligation to pay more than $1,454,914,684 for the combined amounts of Incentive Payment C and Incentive Payment D minus any offsets for Non-Settling States specified in Section IV.F and reductions for unachieved incentives.

hundred twenty-five (125) hospital beds in one or more hospitals rendering services in that district; and (iv) Primary Fire Districts) in that State has a lawsuit against a Released Entity that survived in whole or in part a Threshold Motion and is pending as of April 30 in Payment Years 6 to 10 ("*Incentive Payment D Look-Back Dates*").

e. The Incentive Payment D for any Settling State in Payment Years 6-10 shall be between six percent (6%) and fifteen percent (15%) of the Maximum Remediation Payment times the Settling State's Overall Allocation Percentage specified in Exhibit F-2. The applicable percentage shall be determined based on the Participation Percentage of the Incentive C Eligible Subdivision Population achieved by the Settling State as of April 30, 2027 as shown in the table below:

Participation Percentage of Incentive C Eligible Subdivision Population as of April 30, 2027	**Settling State's Applicable Incentive Payment D Percentage**
Participation of less than 96%	15% of Maximum Remediation Payment
Participation of 96% but less than 97%	14.4% of Maximum Remediation Payment
Participation of 97% but less than 98%	13% of Maximum Remediation Payment
Participation of 98% but less than 99%	10.2% of Maximum Remediation Payment
Participation of 99% but less than 100%	7.4% of Maximum Remediation Payment
Participation of 100%	6% of Maximum Remediation Payment

f. Incentive Payment D shall be available in equal installments in Payment Years 6-10, unless an adjustment to payment is required by Section IV.H.9.i or Section IV.H.9.j after the Annual Payment is made for Payment Year 6, in which case the adjustment shall be made in a way that equalizes, to the extent possible, its effect over the remaining Payment Years.[9]

g. Prior to determining the Annual Payment for each of Payment Years 6 through 10, the Settlement Fund Administrator shall determine a Settling State's eligibility for Incentive Payment D as of the Incentive Payment D Look-Back Date

[9] The top of the range for Incentive Payment D specified in Exhibit M-2 for Payment Years 6-10 represents five years of equal payments of Incentive Payment D at fifteen percent (15%) of the Maximum Remediation Payment for all Eligible States. The bottom of the range for Incentive Payment D specified in Exhibit M-2 for Payment Years 6-10 represents five years of equal payments of Incentive Payment D at six percent (6%) of the Maximum Remediation Payment for all Eligible States. Incentive Payment D cannot exceed the top of the range for Incentive Payment D specified in Exhibit M-2 for each of Payment Years 6-10. Any Incentive Payment D in excess of the bottom of the range for Incentive Payment D must correspond to reductions to Incentive Payment C in a prior or the same Payment Year, as provided by the Incentive Payment C table specified in Section IV.H.8.f.

in each such Payment Year. Prior to each Incentive Payment D Look-Back Date, CVS may provide the Settlement Fund Administrator and the Enforcement Committee with notice identifying any Settling State(s) it believes do not qualify for Incentive Payment D and information supporting its belief.

h. If, at any time during the term of this Agreement any Subdivision becomes a Later Litigating Subdivision (as that term is limited by Section IV.H.9.c), then CVS shall, within thirty (30) calendar days of CVS or any Released Entity being served, provide notice to the Settling State in which such Released Claims are being pursued and shall give the relevant Settling State a reasonable opportunity to extinguish the Released Claims without any payment or any other obligations being imposed upon any Released Entities (apart from the Global Settlement Amount payable by CVS under the Agreement or the Injunctive Relief Terms incurred by it). The relevant Settling State and CVS shall confer and use reasonable efforts to promptly resolve the lawsuit so that it is dismissed with prejudice. Nothing in this subsection creates an obligation for a Settling State to make a monetary payment or incur any other obligation to an entity filing a lawsuit.

i. If a Later Litigation Subdivision's lawsuit results in a money judgment being entered against a Released Entity or reasonable settlement being reached with a Released Entity, the amount is to be set off from the total Incentive Payment D for which the Settling State may become eligible. The total Incentive Payment D for which the Settling State may become eligible shall be reduced by the amount of the judgment or settlement.

j. Notwithstanding Section IV.H.9.d, a Settling State can become re-eligible for Incentive Payment D if the lawsuit that survived a Threshold Motion is dismissed pursuant to a later motion on grounds included in the Threshold Motion, in which case the Settling State shall be eligible for any missed payments of Incentive Payment D in the following Payment Year, less any litigation fees and costs incurred by CVS in the interim, except that if the dismissal motion occurs after the completion of opening statements in such action, the Settling State shall not be eligible for Incentive Payment D. The Settlement Fund Administrator shall decrease the missed payments payable pursuant to this Section IV.H.9.j to the extent it cannot be paid without exceeding the top end of an applicable payment range shown in Exhibit M-2 for the remaining Payment Years.

I. In no event shall any Settling State receive base payments and incentive payments totaling more than one hundred percent (100%) of its respective Overall Allocation Percentage specified in Exhibit F-2 times the Maximum Remediation Payment.

J. *Credit for Dispensing Services.* CVS and a Settling State may enter into an agreement for CVS to earn credits against Annual Payments for dispensing free-of-charge opioid alternatives, for free-of-charge product provided in connection with other opioid-related resolutions, and/or for other initiatives and services.

V. Allocation and Use of Settlement Payments

A. *Components of Settlement Fund*. The Settlement Fund shall be comprised of a Remediation Accounts Fund, a State Fund, and a Subdivision Fund for each Settling State. The payment made under Section IV into the Settlement Fund shall be initially allocated among those three (3) sub-funds and distributed and used as provided below or as provided for by a State-Subdivision Agreement (or other State-specific allocation of funds).

B. *Use of Settlement Payments*.

1. It is the intent of the Parties that the payments disbursed from the Settlement Fund to Settling States and Participating Subdivisions be for Opioid Remediation to address Alleged Harms, subject to exceptions that must be documented in accordance with Section V.B.2. In no event may less than 95.5% of CVS's maximum payment amounts pursuant to Section IV as set forth on Exhibit M-1 over the entirety of all Payment Years (but not in any single Payment Year) be spent on Opioid Remediation; *provided, however*, that the remaining 4.5% only may be spent outside of Opioid Remediation to the extent necessary to satisfy: (a) back-stop attorney fee agreements entered into by Settling States with respect to at least one opioid settlement on or before November 30, 2022, even if such an agreement did not as of that date apply to CVS's Annual Payments; or (b) contingency fee agreements entered into by Settling States covering CVS's Annual Payments. Any amounts not spent to satisfy such agreements must be spent on Opioid Remediation.

2. While disfavored by the Parties, a Settling State or a Participating Subdivision may, subject to the limitation in the second sentence of Section V.B.1, use monies from the Settlement Fund (that have not been restricted by this Agreement solely to future Opioid Remediation) for purposes that do not qualify as Opioid Remediation, provided that if, at any time, a Settling State or a Participating Subdivision listed on Exhibit G uses any monies from the Settlement Fund for a purpose that does not qualify as Opioid Remediation, such Settling State or Participating Subdivision listed on Exhibit G shall identify such amounts and report to the Settlement Fund Administrator and CVS how such funds were used, including if used to pay attorneys' fees, investigation costs, litigation costs, or costs related to the operation and enforcement of this Agreement, respectively. Such expenditures shall be reported to the Settlement Fund Administrator and CVS by January 31 of the year following the calendar year in which they are made. It is the intent of the Parties that the reporting under this Section V.B.2 shall be available to the public. For the avoidance of doubt, (a) any amounts not identified under this Section V.B.2 as used to pay attorneys' fees, investigation costs, or litigation costs shall be included in the Total Remediation Amount for purposes of Section V.F and (b) Participating Subdivisions not listed on Exhibit G may only use monies from the Settlement Fund for purposes that qualify as Opioid Remediation.

C. *Allocation of Settlement Fund*. The allocation of the Settlement Fund allows for different approaches to be taken in different Settling States, such as through a State-Subdivision Agreement. Given the uniqueness of Settling States and their Participating Subdivisions, Settling States and their Participating Subdivisions are encouraged to enter into State-Subdivision

Agreements in order to direct the allocation of their portion of the Settlement Fund. This Agreement has no effect on the ability of Settling States and their Participating Subdivisions to internally agree on the allocation of their portion of the Settlement Fund. As set out below, the Settlement Fund Administrator will make an initial allocation to three (3) state-level sub-funds. The Settlement Fund Administrator will then, for each Settling State and its Participating Subdivisions, apply the terms of this Agreement and any relevant State-Subdivision Agreement, Statutory Trust, Allocation Statute, or voluntary redistribution of funds as set out below before disbursing the funds.

1. Base Payments. The Settlement Fund Administrator will allocate base payments under Section IV.G among the Settling States pursuant to Section VI.G. Base payments for each Settling State will then be allocated fifteen percent (15%) to its State Fund, seventy percent (70%) to its Remediation Accounts Fund, and fifteen percent (15%) to its Subdivision Fund. Amounts may be reallocated and will be distributed as provided in Section V.D.

2. Incentive Payments. The Settlement Fund Administrator will treat incentive payments under Section IV.H on a Settling State-specific basis in proportion to each Settling State's respective Overall Allocation Percentage. Incentive payments for which a Settling State is eligible under Section IV.H will be allocated fifteen percent (15%) to its State Fund, seventy percent (70%) to its Remediation Accounts Fund, and fifteen percent (15%) to its Subdivision Fund. Amounts may be reallocated and will be distributed as provided in Section V.D.

3. Settlement Fund Administrator. Prior to the Initial Subdivision Participation Date, CVS and the Enforcement Committee will agree to a detailed mechanism consistent with the foregoing for the Settlement Fund Administrator to follow in allocating, apportioning, and distributing payments, which shall then be appended hereto as Exhibit L.

4. Settlement Fund Administrator Costs. Any reasonable costs and fees of the Settlement Fund Administrator accruing under this Agreement as described in Exhibit L shall be paid from the interest accrued in the Settlement Fund; *provided, however*, that if such accrued interest is insufficient to pay the entirety of any such costs and fees, CVS shall pay fifty percent (50%) of the additional amount directly to the Settlement Fund Administrator and fifty percent (50%) shall be paid out of the Settlement Fund.

D. *Settlement Fund Reallocation and Distribution.*

As set forth below, within a particular Settling State's account, amounts contained in the Settlement Fund sub-funds may be reallocated and distributed per a State-Subdivision Agreement or other means. If the apportionment of amounts is not addressed and controlled under Section V.D.1 and Section V.D.2, then the default provisions of Section V.D.4 apply. It is not necessary that a State-Subdivision Agreement or other means of allocating funds pursuant to Section V.D.1 and Section V.D.2 address all of the Settlement Fund sub-funds. For example, a Statutory Trust might only address disbursements from a Settling State's Remediation Accounts Fund.

1. Distribution by State-Subdivision Agreement. If a Settling State has a State-Subdivision Agreement, amounts apportioned to that Settling State's State Fund, Remediation Accounts Fund, and Subdivision Fund under Section V.C shall be reallocated and distributed as provided by that agreement. Any State-Subdivision Agreement entered into or amended after the Preliminary Agreement Date shall be applied only if it requires: (a) that all amounts be used for Opioid Remediation, except as allowed by Section V.B.2, and (b) that at least seventy percent (70%) of amounts be used solely for future Opioid Remediation.[10] For a State-Subdivision Agreement to be applied to the relevant portion of the Annual Payment, notice must be provided to CVS and the Settlement Fund Administrator at least ten (10) business days prior to the Settlement Fund Administrator's disbursements of such portion to a Settlement State and its Participating Subdivisions.

2. Distribution by Allocation Statute. If a Settling State has an Allocation Statute and/or a Statutory Trust that addresses allocation or distribution of amounts apportioned to such Settling State's State Fund, Remediation Accounts Fund, and/or Subdivision Fund and that, to the extent any or all such sub-funds are addressed, requires (1) all amounts to be used for Opioid Remediation, except as allowed by Section V.B.2, and (2) at least seventy percent (70%) of all amounts to be used solely for future Opioid Remediation,[11] then, to the extent allocation or distribution is addressed, the amounts apportioned to that Settling State's State Fund, Remediation Accounts Fund, and Subdivision Fund under Section V.C shall be allocated and distributed as addressed and provided by the applicable Allocation Statute or Statutory Trust. For the avoidance of doubt, an Allocation Statute or Statutory Trust need not address all three (3) sub-funds that comprise the Settlement Fund, and if the applicable Allocation Statute or Statutory Trust does not address distribution of all or some of these three (3) sub-funds, the applicable Allocation Statute or Statutory Trust does not replace the default provisions described in Section V.D.4 of any such unaddressed fund. For example, if an Allocation Statute or Statutory Trust that meets the requirements of this Section V.D.2 only addresses funds restricted to remediation and abatement, then the default provisions in this Agreement concerning allocation among the three (3) sub-funds comprising the Settlement Fund and the distribution of the State Fund and Subdivision Fund for that Settling State would still apply, while the distribution of the applicable Settling State's Remediation Accounts Fund would be governed by the qualifying Allocation Statute or Statutory Trust.

3. Voluntary Redistribution. A Settling State may choose to reallocate all or a portion of its State Fund to its Remediation Accounts Fund. A Participating Subdivision included on Exhibit G may choose to reallocate all or a portion of its allocation from the Subdivision Fund to the State's Remediation Accounts Fund or to another Participating Subdivision. The Settlement Fund Administrator is not required to honor a voluntary

[10] Future Opioid Remediation includes amounts paid to satisfy any future demand by another governmental entity to make a required reimbursement in connection with the past care and treatment of a person related to the Alleged Harms.

[11] Future Opioid Remediation includes amounts paid to satisfy any future demand by another governmental entity to make a required reimbursement in connection with the past care and treatment of a person related to the Alleged Harms.

redistribution for which notice is provided to it less than sixty (60) calendar days prior to the applicable Payment Date.

4. Distribution in the Absence of a State-Subdivision Agreement, Allocation Statute, or Statutory Trust. If Section V.D.1 and Section V.D.2 do not apply, amounts apportioned to that Settling State's State Fund, Remediation Accounts Fund, and Subdivision Fund under Section V.C shall be distributed as follows:

a. Amounts apportioned to that Settling State's State Fund shall be distributed to that State.

b. Amounts apportioned to that Settling State's Remediation Accounts Fund shall be distributed consistent with Section V.E. Each Settling State shall submit to the Settlement Fund Administrator a designation of a lead state agency or other entity to serve as the single point of contact for that Settling State's funding requests from the Remediation Accounts Fund and other communications with the Settlement Fund Administrator. The designation of an individual entity is for administrative purposes only and such designation shall not limit funding to such entity or even require that such entity receive funds from this Agreement. The designated entity shall be the only entity authorized to request funds from the Settlement Fund Administrator to be disbursed from that Settling State's Remediation Accounts Fund. If a Settling State has established a Statutory Trust, then that Settling State's single point of contact may direct the Settlement Fund Administrator to release the State's Remediation Accounts Fund to the Statutory Trust.

c. Amounts apportioned to that Settling State's Subdivision Fund shall be distributed to Participating Subdivisions in that State included on Exhibit G per the Subdivision Allocation Percentage listed in Exhibit G. Section V.F shall govern amounts that would otherwise be distributed to Non-Participating Subdivisions listed in Exhibit G. For the avoidance of doubt and notwithstanding any other provision in this Agreement, no Non-Participating Subdivision will receive any amount from the Settlement Fund, regardless of whether such Subdivision is included on Exhibit G.

d. Special Districts shall not be allocated funds from the Subdivision Fund, except through a voluntary redistribution allowed by Section V.D.3 to Special Districts that are Participating Subdivisions. A Settling State may allocate funds from its State Fund or Remediation Accounts Fund for Special Districts that are Participating Subdivisions.

5. Restrictions on Distribution. No amounts may be distributed from the Subdivision Fund contrary to Section VII, *i.e.*, no amounts may be distributed directly to Non-Participating Subdivisions to the extent such a distribution would violate Section VII.G or Section VII.H. Amounts allocated to the Subdivision Fund that cannot be distributed by virtue of the preceding sentence shall be distributed into the sub-account in the Remediation Accounts Fund for the Settling State in which the Non-Participating

Subdivision is located, unless those payments are redirected elsewhere by a State-Subdivision Agreement described in Section V.D.1 or by an Allocation Statute or a Statutory Trust described in Section V.D.2.

E. *Provisions Regarding the Remediation Accounts Fund.*

1. State-Subdivision Agreement, Allocation Statute, and Statutory Trust Fund Provisions. A State-Subdivision Agreement, Allocation Statute, or Statutory Trust in a Settling State may govern the operation and use of amounts in that State's Remediation Accounts Fund so long as it complies with the requirements of Section V.D.1 or Section V.D.2, as applicable, and all direct payments to Participating Subdivisions in that State comply with Section VII.G through Section VII.I.

2. Absence of a State-Subdivision Agreement, Allocation Statute, or Statutory Trust. In the absence of a State-Subdivision Agreement, Allocation Statute, or Statutory Trust that addresses distribution, the Remediation Accounts Fund will be used by a Settling State solely for future Opioid Remediation[12] and the following shall apply with respect to a Settling State:

a. *Regional Remediation.*

(i) At least fifty percent (50%) of distributions for remediation from a Settling State's Remediation Accounts Fund shall be annually allocated and tracked to the regional level. A Settling State may allow the Advisory Committee established pursuant to Section V.E.2.d to define its regions and assign regional allocations percentages. Otherwise, a Settling State shall (A) define its initial regions, which shall consist of one (1) or more General-Purpose Subdivision(s) and which shall be designated by the state agency with primary responsibility for substance abuse disorder services employing, to the maximum extent practical, existing regions established in that State for opioid abuse treatment or other public health purposes; (B) assign initial regional allocation percentages to the regions based on the Subdivision Allocation Percentages in Exhibit G and an assumption that all Subdivisions included on Exhibit G will become Participating Subdivisions.

(ii) This minimum regional expenditure percentage is calculated using the Settling State's initial Remediation Accounts Fund allocation and does not include any additional amounts a Settling State has directed to its Remediation Accounts Fund from its State Fund, or any other amounts directed to the fund. A Settling State may dedicate more than fifty percent (50%) of its Remediation Accounts Fund to the regional expenditure and may annually adjust the percentage of its Remediation Accounts Fund

[12] Future Opioid Remediation includes amounts paid to satisfy any future demand by another governmental entity to make a required reimbursement in connection with the past care and treatment of a person related to the Alleged Harms.

dedicated to regional expenditures as long as the percentage remains above the minimum amount.

(iii) A Settling State (A) has the authority to adjust the definition of the regions, and (B) may annually revise the percentages allocated to each region to reflect the number of General-Purpose Subdivisions in each region that are Non-Participating Subdivisions.

b. *Subdivision Block Grants.* Certain Participating Subdivisions shall be eligible to receive regional allocation funds in the form of block grants for future Opioid Remediation. A Participating Subdivision eligible for block grants is a county or parish (or in the case of Settling States that do not have counties or parishes that function as political subdivisions, a city) that (1) does not contain a Litigating Subdivision or a Later Litigating Subdivision for which it has the authority to end the litigation through a release, bar or other action, (2) either (i) has a population of 400,000 or more or (ii) in the case of California has a population of 750,000 or more, and (3) has funded or otherwise managed an established health care or treatment infrastructure (*e.g.*, health department or similar agency). Each Participating Subdivision eligible to receive block grants shall be assigned its own region.

c. *Small States.* Notwithstanding the provisions of Section V.E.2.a, Settling States with populations under four (4) million that do not have existing regions described in Section V.E.2.a shall not be required to establish regions. However, such a Settling State that contains one (1) or more Participating Subdivisions eligible for block grants under Section V.E.2.c shall be divided regionally so that each block-grant eligible Participating Subdivision is a region and the remainder of the Settling State is a region.

d. *Advisory Committee.* A Settling State shall designate an Opioid Settlement Remediation Advisory Committee (the "*Advisory Committee*") to provide input and recommendations regarding remediation spending from that Settling State's Remediation Accounts Fund. A Settling State may elect to use an existing advisory committee or similar entity (created outside of a State-Subdivision Agreement or Allocation Statute); *provided, however*, the Advisory Committee or similar entity shall meet the following requirements:

(i) Written guidelines that establish the formation and composition of the Advisory Committee, terms of service for members, contingency for removal or resignation of members, a schedule of meetings, and any other administrative details;

(ii) Composition that includes at least an equal number of local representatives as state representatives;

(iii) A process for receiving input from Participating Subdivisions and other communities regarding how the opioid crisis is

affecting their communities, their abatement needs, and proposals for abatement strategies and responses; and

(iv) A process by which Advisory Committee recommendations for expenditures for Opioid Remediation will be made to and considered by the appropriate state agencies.

3. Remediation Accounts Fund Reporting. The Settlement Fund Administrator shall track and assist in the report of remediation disbursements as agreed to between CVS and the Enforcement Committee.

F. *Nature of Payment*. CVS, the Settling States, and the Participating Subdivisions each acknowledge and agree that notwithstanding anything to the contrary in this Agreement, including, but not limited to, the scope of the Released Claims:

1. They have entered into this Agreement to avoid the delay, expense, inconvenience, and uncertainty of further litigation;

2. (a) The Settling States and Participating Subdivisions sought compensatory restitution and remediation (within the meaning of 26 U.S.C. § 162(f)(2)(A) and 26 C.F.R. § 1.162-21(e)(4)(i), (ii)) as damages for the Alleged Harms allegedly suffered by the Settling States and Participating Subdivisions; (b) the Total Remediation Amount is less than or equal to the amount, in the aggregate, of the Alleged Harms allegedly suffered by the Settling States and Participating Subdivisions; and (c) the portion of the Total Remediation Amount received by each Settling State or Participating Subdivision is less than or equal to the amount of the Alleged Harms allegedly suffered by such Settling State or Participating Subdivision;

3. The payment of the Total Remediation Amount by CVS constitutes, and is paid for, compensatory restitution and remediation (within the meaning of 26 U.S.C. § 162(f)(2)(A) and 26 C.F.R. § 1.162-21(e)(4)(i), (ii)) for alleged damage or harm (as compensation for alleged damage or harm arising out of alleged bodily injury) allegedly caused by CVS in order to restore, in whole or in part, the Settling States, Participating Subdivisions, and persons to the same position or condition that they would be in had the Settling States, Participating Subdivisions, and persons not suffered the Alleged Harms, and constitutes compensatory restitution and remediation for alleged damage or harm allegedly caused by the potential violation of a law and/or is an amount paid to come into compliance with the law; and

4. For the avoidance of doubt: (a) the entire Total Remediation Amount is properly characterized as described in Section V.F, (b) no portion of the Total Remediation Amount represents reimbursement to any Settling State or Participating Subdivision or other person or entity for the fees or costs of any investigation or litigation, including without limitation attorneys' fees, (c) no portion of the Global Settlement Amount constitutes the disgorgement of any allegedly ill-gotten gains, and (d) no portion of the Global Settlement Amount is paid for, is in place of, or is properly characterized as the payment of any fine, penalty, punitive damages, or other punitive assessments.

VI. Enforcement

A. *Enforceability.* This Agreement is enforceable only by the Settling States and CVS; *provided, however*, that Released Entities may enforce Section XI and Participating Subdivisions listed on Exhibit G have the enforcement rights described in Section VI.D. Except to the extent allowed by the Injunctive Relief Terms, Settling States and Participating Subdivisions shall not have enforcement rights with respect to either the terms of this Agreement that apply only to or in other States or any Consent Judgment entered into by another Settling State. Participating Subdivisions shall not have enforcement rights against CVS with respect to this Agreement or any Consent Judgment except that Participating Subdivisions shall have enforcement rights as set forth herein as to payments that would be allocated to the Subdivision Fund or Remediation Accounts Fund pursuant to Section V; *provided, however*, that each Settling State shall allow Participating Subdivisions in such Settling State to notify it of any perceived violations of this Agreement or the applicable Consent Judgment.

B. *Jurisdiction.* CVS consents to the jurisdiction of the court in each Settling State in which the Consent Judgment is filed, limited to and for the sole and exclusive purpose of resolution of disputes identified in Section VI.F.2 for resolution in that court.

C. *Specific Terms Dispute Resolution.*

1. Any dispute that is addressed by the provisions set forth in the Injunctive Relief Terms shall be resolved as provided therein.

2. In the event that CVS believes that the requirements established in Section V.B.1 are not being satisfied, CVS may request that CVS and the Enforcement Committee meet and confer regarding the use of funds to implement Section V.B.1. The completion of such meet-and-confer process is a precondition to further action regarding any such dispute. Further action concerning Section V.B.1 shall: (i) be limited to CVS obtaining a reduction of its Annual Payments by no more than five percent (5%) of the difference between the actual amount of Opioid Remediation and the 95.5% of CVS's maximum payment amounts pursuant to Section IV as set forth on Exhibit M-1 over the entirety of all Payment Years (but not in any single Payment Year); (ii) only reduce Annual Payments to those Settling States and their Participating Subdivisions that are out of compliance with the requirements established in Section V.B.1; and (iii) not reduce Annual Payments restricted to future Opioid Remediation.

D. *State-Subdivision Enforcement*.

1. A Subdivision shall not have enforcement rights against a Settling State in which it is located with respect to this Agreement or any Consent Judgment except that a Participating Subdivision listed on Exhibit G shall have enforcement rights (a) as provided for in a State-Subdivision Agreement, Allocation Statute, or Statutory Trust with respect to intrastate allocation; or (b) in the absence of a State-Subdivision Agreement, Allocation Statute, or Statutory Trust, to address allegations that (i) the Settling State's use of Remediation Accounts Fund monies were not used for uses similar to or in the nature of those uses contained in Exhibit E, or (ii) a Settling State failed to pay funds directly from

the Remediation Accounts Fund to a Participating Subdivision eligible to receive a block grant pursuant to Section V.E.2.b.

2. A Settling State shall have enforcement rights against a Participating Subdivision located in its territory (a) as provided for in a State-Subdivision Agreement, Allocation Statute, or Statutory Trust; or (b) in the absence of a State-Subdivision Agreement, Allocation Statute, or Statutory Trust, to address allegations that the Participating Subdivisions' uses of Remediation Accounts Fund monies were not used for purposes similar to or in the nature of those uses contained in Exhibit E.

3. As between Settling States and Participating Subdivisions, the above rights are contractual in nature and nothing herein is intended to limit, restrict, change or alter any other existing rights under law.

E. *Subdivision Payment Enforcement.* A Participating Subdivision listed on Exhibit G shall have the same right as a Settling State pursuant to Section VI.F.3.a(iv) to seek resolution regarding the failure by CVS to make its allocable share of an Annual Payment in a Payment Year.

F. *Other Terms Regarding Dispute Resolution.*

1. Except as provided by Section VI.C, the parties to a dispute shall promptly meet and confer in good faith to resolve any dispute. If the parties cannot resolve the dispute informally, and unless otherwise agreed in writing, they shall follow the remaining provisions of this Section VI.F to resolve the dispute.

2. Except to the extent provided by Section VI.C or Section VI.F.3, all disputes shall be resolved in either the court that entered the relevant Consent Judgment or, if no such Consent Judgment was entered, a state or territorial court with jurisdiction located wherever the seat of the relevant state government is located.

a. State court proceedings shall be governed by the rules and procedures of the relevant forum.

b. For the avoidance of doubt, disputes to be resolved in state court include, but are not limited to, the following:

(i) disputes concerning whether expenditures qualify as Opioid Remediation;

(ii) disputes between a Settling State and its Participating Subdivisions as provided by Section VI.D, except to the extent the State-Subdivision Agreement provides for other dispute resolution mechanisms. For the avoidance of doubt, disputes between a Settling State and any Participating Subdivision shall not be considered National Disputes;

(iii) whether this Agreement and relevant Consent Judgment are binding under state law;

(iv) the extent of the Attorney General's or other participating entity's authority under state law, including the extent of the authority to release claims;

(v) whether the definition of a Bar, a Case-Specific Resolution, Final Order, lead state agency as described in Section V.D.4.b, Later Litigating Subdivision, Litigating Subdivision, or Threshold Motion has been met; and

(vi) all other disputes not specifically identified in Section VI.C or Section VI.F.3.

c. Any Party may request that the National Arbitration Panel provide an interpretation of any provision of the Agreement that is relevant to the state court determination, and the National Arbitration Panel shall make reasonable best efforts to supply such interpretation within the earlier of thirty (30) calendar days or the time period required by the state court proceedings. Any Party may submit that interpretation to the state court to the extent permitted by, and for such weight provided by, the state court's rules and procedures. If requested by a Party, the National Arbitration Panel shall request that its interpretation be accepted in the form of an *amicus curiae* brief, and any attorneys' fees and costs for preparing any such filing shall be paid for by the requesting Party.

3. National Disputes involving a Settling State, a Participating Subdivision that has enforcement rights pursuant to Section VI.A, and/or CVS (together, "*Participating Parties*") shall be resolved by the National Arbitration Panel.

a. National Disputes are disputes that are not addressed by Section VI.C, and which are exceptions to Section VI.F.2's presumption of resolution in state courts because they involve issues of interpretation of terms contained in this Agreement applicable to all Settling States without reference to a particular State's law. Disputes between a Settling State and any Participating Subdivision shall not be considered National Disputes. National Disputes are limited to the following:

(i) The amount of withholding attributable to Non-Settling States;

(ii) issues involving the scope and definition of Product;

(iii) interpretation and application of the terms "Alleged Harms," "Covered Conduct," "Released Entities," and "Released Claims";

(iv) the failure by CVS to pay the Annual Payment, the Additional Remediation Amount in a Payment Year, or the amounts due pursuant to Exhibit S and Exhibit T, but for the avoidance of doubt, disputes between CVS and a Settling State over the amounts owed only to that

Settling State that do not affect any other Settling State shall not be considered National Disputes;

(v) the interpretation and application of any most-favored-nation provision in Section XIII.E;

(vi) questions regarding the performance and/or removal of the Settlement Fund Administrator;

(vii) disputes involving liability of successor entities;

(viii) disputes that require a determination of the sufficiency of participation in order to qualify for Incentive Payments A, B, C or D;

(ix) disputes requiring the interpretation of Agreement terms that are national in scope or impact, which shall mean disputes requiring the interpretation of Agreement terms that (i) concretely affect four (4) or more Settling States; and (ii) do not turn on unique definitions and interpretations under state law; and

(x) any dispute subject to resolution under Section VI.F.2 but for which all Participating Parties to the dispute agree to arbitration before the National Arbitration Panel under the provisions of this SectionVI.F.3.

b. The National Arbitration Panel shall be comprised of three (3) arbitrators. One (1) arbitrator shall be chosen by CVS, one (1) arbitrator shall be chosen by the Enforcement Committee with due input from Participating Subdivisions listed on Exhibit G, and the third arbitrator shall be agreed upon by the first two (2) arbitrators. The membership of the National Arbitration Panel is intended to remain constant throughout the term of this Agreement, but in the event that replacements are required, the retiring arbitrator shall be replaced by the party that selected him/her.

c. The National Arbitration Panel shall make reasonable best efforts to decide all matters within one hundred eighty (180) calendar days of filing, and in no event shall it take longer than one (1) year.

d. The National Arbitration Panel shall conduct all proceedings in a reasonably streamlined process consistent with an opportunity for the Participating Parties to be heard. Issues shall be resolved without the need for live witnesses where feasible, and with a presumption in favor of remote participation to minimize the burdens on the Participating Parties.

e. To the extent allowed under state law, a Settling State, a Participating Subdivision that has enforcement rights pursuant to Section VI.A, and (at any Participating Party's request) the National Arbitration Panel may certify to an appropriate state court any question of state law. The National Arbitration Panel

shall be bound by a final state court determination of such a certified question. The time period for the arbitration shall be tolled during the course of the certification process.

f. The arbitrators will give due deference to any authoritative interpretation of state law, including any declaratory judgment or similar relief obtained by a Settling State, a Participating Subdivision that has enforcement rights pursuant to Section VI.A, or CVS on a state law issue.

g. The decisions of the National Arbitration Panel shall be binding on Settling States, Participating Subdivisions, CVS, and the Settlement Fund Administrator. In any proceeding before the National Arbitration Panel involving a dispute between a Settling State and CVS whose resolution could prejudice the rights of a Participating Subdivision(s) in that Settling State, such Participating Subdivision(s) shall be allowed to file a statement of view in the proceeding.

h. Nothing herein shall be construed so as to limit or otherwise restrict a Settling State from seeking injunctive or other equitable relief in state court to protect the health, safety, or welfare of its citizens.

i. Each Participating Party shall bear its own costs in any arbitration or court proceeding arising under this Section VI. The costs for the arbitrators on the National Arbitration Panel shall be divided and paid equally by the disputing sides for each individual dispute, *e.g.*, a dispute between CVS and Settling States/Participating Subdivisions shall be split fifty percent (50%) by CVS and fifty percent (50%) by the Settling States/Participating Subdivisions that are parties to the dispute; a dispute between a Settling State and a Participating Subdivision shall be split fifty percent (50%) by the Settling State that is party to the dispute and fifty percent (50%) by any Participating Subdivisions that are parties to the dispute.

4. Prior to initiating an action to enforce pursuant to this Section VI.F, the complaining Participating Party must:

a. Provide written notice to the Enforcement Committee of its complaint, including the provision of the Consent Judgment and/or Agreement that the practice appears to violate, as well as the basis for its interpretation of the disputed provision. The Enforcement Committee shall establish a reasonable process and timeline for obtaining additional information from the involved parties; *provided*, *however*, that the date the Enforcement Committee establishes for obtaining additional information from the Participating Parties shall not be more than forty-five (45) calendar days following the notice. The Enforcement Committee may advise the Participating Parties of its views on the complaint and/or seek to resolve the complaint informally.

b. Wait to commence any enforcement action until thirty (30) calendar days after the date that the Enforcement Committee establishes for obtaining additional information from the Participating Parties.

5. If the Participating Parties to a dispute cannot agree on the proper forum for resolution of the dispute under the provisions of Section VI.F.2 or SectionVI.F.3, a committee comprising the Enforcement Committee and sufficient representatives of CVS, such that the members of the Enforcement Committee have a majority of one (1) member, will determine, within twenty-eight (28) calendar days of receiving notification of the dispute relating to the proper forum, the forum where the dispute will be initiated. The forum identified by such committee shall be the sole forum for resolving the issue of which forum will hear the substantive dispute, and the committee's identification of such forum in the first instance shall not be entitled to deference by the forum selected.

G. *No Effect.* Nothing in this Agreement shall be interpreted to limit the Settling States' Civil Investigative Demand ("*CID*") or investigative subpoena authority, to the extent such authority exists under applicable state law and the CID or investigative subpoena is issued pursuant to such authority, and CVS reserves all of its rights in connection with a CID or investigative subpoena issued pursuant to such authority.

VII. Participation by Subdivisions

A. *Notice.* Prior to the State Participation Date, the Parties shall agree on a vendor to serve as the Implementation Administrator and provide notice pursuant to this Section VII.A. No later than fifteen (15) calendar days after the Preliminary Agreement Date, the Implementation Administrator shall send individual written notice (which may be delivered via e-mail or other electronic means) of the opportunity to participate in this Agreement and the requirements of participation to all Subdivisions in the Settling States that are (1) Litigating Subdivisions or (2) Non-Litigating Subdivisions listed on Exhibit G. To the extent a Special District is entitled to an allocation for a direct payment through its inclusion in Exhibit G pursuant to a State-Subdivision Agreement, Allocation Statute, Statutory Trust, or voluntary redistribution, the Implementation Administrator, with the cooperation of the Settling States shall also send individual written notice (which may be delivered via e-mail or other electronic means) of the opportunity to participate in this Agreement and the requirements of participation to such Special Districts. Unless otherwise agreed by the Parties, the version of Exhibit G used for notice shall be the one in place as of the State Participation Date. Notice (which may be delivered via e-mail or other electronic means) shall also be provided simultaneously to counsel of record for Litigating Subdivisions and known counsel for Non-Litigating Subdivisions and Special Districts listed on Exhibit G. The Settling States also may provide general notice reasonably calculated to alert Non-Litigating Subdivisions in the Settling States to this Agreement, the opportunity to participate in it, and the requirements for participation. Such Notice may include publication and other standard forms of notification, as well as notice to national state and county organizations such as the National Association of Counties and the National League of Cities. All notice provided under this subsection will include that the deadline for becoming a Participating Subdivision is the Initial Subdivision Participation Date. Nothing contained herein shall preclude a Settling State from providing further notice to or otherwise contacting any of its Subdivisions about becoming a Participating Subdivision, including beginning any of the activities described in this paragraph prior to the Preliminary Agreement Date.

B. *Requirements for Becoming a Participating Subdivision—Non-Litigating Subdivisions.* A Non-Litigating Subdivision in a Settling State may become a Participating Subdivision by returning an executed Subdivision Participation Agreement to the Implementation Administrator or Settlement Fund Administrator (which may be executed and returned by electronic means established by the Implementation Administrator or Settlement Fund Administrator) specifying (1) that the Subdivision agrees to the terms of this Agreement pertaining to Subdivisions, (2) that the Subdivision releases all Released Claims against all Released Entities, (3) that the Subdivision agrees to use monies it receives, if any, from the Settlement Fund pursuant to the applicable requirements of Section V; *provided, however*, that Non-Litigating Subdivisions may only use monies originating from the Settlement Fund for purposes that qualify as Opioid Remediation, and (4) that the Subdivision submits to the jurisdiction of the court where the applicable Consent Judgment is filed for purposes limited to that court's role under this Agreement. The required Subdivision Participation Agreement is attached as Exhibit K.

C. *Requirements for Becoming a Participating Subdivision—Litigating Subdivisions/Later Litigating Subdivisions.* A Litigating Subdivision or Later Litigating Subdivision in a Settling State may become a Participating Subdivision by returning an executed Subdivision Participation Agreement to the Implementation Administrator or Settlement Fund Administrator (which may be executed and returned by electronic means established by the Implementation Administrator or Settlement Fund Administrator) and upon prompt dismissal with prejudice of its lawsuit following the Reference Date or the date on which the conditions for effectiveness in Section VIII.C have been met, whichever is later. Following its execution of a Subdivision Participation Agreement, a Litigating Subdivision shall take reasonable steps to immediately cease all litigation activity against the Released Entities, where feasible, or to minimize such activity by means of agreed deadline extensions and agreed postponement of depositions, document productions, and motion practice, unless the Litigating Subdivision reasonably concludes that it would be prejudiced by doing so. A Settling State may require each Litigating Subdivision in that State to specify on the Subdivision Participation Agreement whether its counsel has waived any contingency fee contract with that Participating Subdivision and whether, if eligible, it intends to seek fees pursuant to Exhibit R. The Settlement Fund Administrator shall provide quarterly reports of this information to the parties organized by Settling State. A Litigating Subdivision or Later Litigating Subdivision may not become a Participating Subdivision after the completion of opening statements in a trial of the lawsuit it brought that includes a Released Claim against a Released Entity. For avoidance of doubt, where a subdivision official other than a General-Purpose Government has filed a lawsuit that includes a Released Claim against a Released Entity in a direct, *parens patriae*, or any other capacity, that Subdivision may become a Participating Subdivision only if, in addition to the other requirements of this Section VII.C, the lawsuit filed by the subdivision official has also been dismissed with prejudice.

D. *Initial Participating Subdivisions.* A Subdivision qualifies as an Initial Participating Subdivision if it meets the applicable requirements for becoming a Participating Subdivision set forth in Section VII.B or Section VII.C by the Initial Subdivision Participation Date. All Subdivision Participation Agreements returned to the Implementation Administrator shall be held in escrow by the Implementation Administrator until the Reference Date. Subdivision Participation Agreements returned to the Implementation Administrator shall not be withdrawn

unless notice of the withdrawal is provided to the Implementation Administrator within eighteen (18) days after the Initial Subdivision Participation Date. If, for any reason, the Agreement does not become effective, all obligations created by such forms and releases in them shall be void *ab initio* and all Subdivision Participation Agreements shall be returned to Counsel for Litigating Subdivisions or to the Subdivisions not represented by counsel or destroyed to the extent that such destruction is not prohibited by then existing document preservation obligations.

E. *Later Participating Subdivisions.* A Subdivision in a Settling State that is not an Initial Participating Subdivision may become a Later Participating Subdivision by meeting the applicable requirements for becoming a Participating Subdivision set forth in Section VII.B or Section VII.C after the Initial Subdivision Participation Date and by agreeing to be subject to the terms of a State-Subdivision Agreement (if any) or any other structure adopted or applicable pursuant to Section V.D or Section V.E. The following provisions govern what a Later Participating Subdivision can receive (but do not apply to Initial Participating Subdivisions):

1. A Later Participating Subdivision shall not receive any share of any Annual Payment due before it became a Participating Subdivision.

2. A Subdivision that becomes a Later Participating Subdivision after November 30, 2023 shall receive seventy-five percent (75%) of the share of future base or incentive payments that it would have received had it become a Later Participating Subdivision prior to that date (unless the Later Participating Subdivision is subject to Section VII.E.3 or Section VII.E.4).

3. A Later Participating Subdivision that, after the Initial Subdivision Participation Date, maintains a lawsuit for a Released Claim(s) against a Released Entity and has judgment entered against it on every such Claim before it became a Participating Subdivision (other than a consensual dismissal with prejudice) is not eligible to become a Participation Subdivision.

4. A Subdivision that becomes a Later Participating Subdivision while a Bar or Case-Specific Resolution involving a different Subdivision exists in its State shall receive twenty-five percent (25%) of the share of future base or incentive payments that it would have received had it become a Later Participating Subdivision without such Bar or Case-Specific Resolution.

F. *No Increase in Payments.* Amounts to be received by Later Participating Subdivisions shall not increase the payments due from CVS.

G. *Ineligible Subdivisions*. Subdivisions in Non-Settling States and Prior Litigating Subdivisions are not eligible to be Participating Subdivisions.

H. *Non-Participating Subdivisions*. Non-Participating Subdivisions shall not directly receive any portion of any Annual Payment, including from the State Fund and direct distributions from the Remediation Accounts Fund; however, a Settling State may choose to fund future Opioid Remediation that indirectly benefits Non-Participating Subdivisions.

I. *Unpaid Allocations to Later Participating Subdivisions and Non-Participating Subdivisions*. Any base payments and incentive payments allocated pursuant to Section V.D to a Later Participating Subdivision or Non-Participating Subdivision that cannot be paid pursuant to this Section VII, including the amounts that remain unpaid after the reductions required by Section VII.E.2 through Section VII.E.4, will be allocated to the Remediation Accounts Fund for the Settling State in which the Non-Participating Subdivision is located, unless those payments are redirected elsewhere by a State-Subdivision Agreement or by a Statutory Trust.

VIII. Condition to Effectiveness of Agreement and Filing of Consent Judgment

A. *Distribution of Subdivision Participation Agreements*. No later than three (3) calendar days after the Initial Subdivision Participation Date, the Implementation Administrator shall report to the Settling States and CVS on which Subdivisions in the Settling States have and have not executed Subdivision Participation Agreements and shall provide notice under Section XIII.Q of any withdrawals of Subdivision Participation Agreements within one (1) business day of the withdrawal. The Settling States and CVS each shall have online access to the Subdivision Participation Agreements for the purpose of auditing the Implementation Administrator's reports but may not maintain copies. CVS shall pay up to and no more than $1.5 million of the Implementation Administrator's fees and costs, including advancing such fees and costs prior to the Effective Date. If this Agreement becomes effective, then CVS may deduct from its Annual Payment for Payment Year 2 any amount in excess of $1.5 million it paid for the Implementation Administrator's fees and costs.

B. *Determination to Proceed with Settlement—Settling States*. Following the Initial Subdivision Participation Date, the Settling States on the Enforcement Committee shall determine whether to proceed with the Agreement. No later than fifteen (15) calendar days prior to the Reference Date, the Settling States shall provide notice to CVS and the Enforcement Committee of their decision. If the Settling States elect not to proceed, this Agreement will have no further effect, and all releases (including those contained in Subdivision Participation Agreements) and other commitments or obligations contained herein or in Subdivision Settlement Participation Forms will be void.

C. *Determination to Proceed with Settlement—CVS.* If the Settling States elect to proceed, CVS shall then determine whether to proceed with the Agreement. This determination shall be in CVS's sole discretion and may be based on any criteria or factors it deems relevant. CVS shall provide notice to the Settling States and the Enforcement Committee of its decision no later than the Reference Date. If CVS elects to proceed with the Agreement, the Parties will proceed to file the Consent Judgments, and the obligations in the State Participation Forms and the Subdivision Participation Agreements will become effective as of the Reference Date. If CVS elects not to proceed, this Agreement will have no further effect, and all releases (including those contained in Subdivision Participation Agreements) and other commitments or obligations contained herein or in Subdivision Participation Agreements will be void.

IX. Additional Remediation

A. *Additional Remediation Amount.* Subject to and without exceeding the maximum payment amounts set forth in the "Additional Remediation Amount" column of Exhibit M-3 and

subject to the reduction specified in Section IX.B, CVS shall pay an Additional Remediation Amount to the Settling States listed in Exhibit N. Such funds shall be paid, on the schedule set forth in Exhibit M-3, on the Payment Date for each relevant Payment Year to such Settling States as allocated by the Settlement Fund Administrator pursuant to Exhibit N.

B. *Reduction of Additional Remediation Amount.* The amounts owed by CVS pursuant to this Section IX shall be reduced by the allocations set forth on Exhibit N for Non-Settling States.

C. For the avoidance of doubt, (1) a Settling State that retained outside counsel in connection with opioid investigations that receives an Additional Remediation Amount because the Settling State was not otherwise eligible to receive funds from the State Outside Counsel Fee Fund may choose to have the Additional Remediation Amount designated to pay the Settling State's outside counsel, and may instruct the Settlement Fund Administrator to pay those funds directly to the Settling State's outside counsel, and (2) Additional Remediation Amount funds, including funds designated by a Settling State to pay its outside counsel under this paragraph, shall not be subject to allocation as provided in Section V.C through Section V.E.

X. Plaintiffs' Attorneys' Fees and Costs

The Agreement on Attorneys' Fees, Expenses and Costs is set forth in Exhibit R and incorporated herein by reference. CVS shall pay subdivision attorneys' fees and costs into the Subdivision Attorney's Fee and Subdivision Cost and Expense Fund as set forth in Exhibit R and Exhibit M-3. The Agreement on the State Outside Counsel Fee Fund and Agreement on the Joint State Cost Fund are set forth in Exhibit S and Exhibit T, respectively, and are incorporated herein by reference. Attorneys' fees, expenses and costs shall not exceed the maximum annual and total amounts set forth in the relevant columns of Exhibits M-1 and M-3 and shall be subject to reduction as set forth in Exhibit R, Exhibit S, and Exhibit T.

XI. Release

A. *Scope.* As of the Effective Date, the Released Entities are hereby released and forever discharged from all of the Releasors' Released Claims. Each Settling State (for itself and its Releasors) and Participating Subdivision (for itself and its Releasors) hereby absolutely, unconditionally, and irrevocably covenants not to bring, file, or claim; or to cause, assist in bringing or permit to be brought, filed, or claimed; or to otherwise seek to establish liability for any Released Claim against any Released Entity in any forum whatsoever. The releases provided for in this Agreement are broad, shall be interpreted so as to give the Released Entities the broadest possible bar against any liability relating in any way to any Released Claim, and extend to the full extent of the power of each Settling State and its Attorney General to release claims. This Agreement shall be a complete bar to any Released Claim.

B. *Claim-Over and Non-Party Settlement*.

1. It is the intent of the Parties that:

a. Released Entities should not seek contribution or indemnification (other than pursuant to an insurance contract), from other parties for their payment obligations under this Agreement;

b. the payments made under this Agreement shall be the sole payments made by the Released Entities to the Releasors involving, arising out of, or related to Alleged Harms and/or Covered Conduct (or conduct that would be Covered Conduct if engaged in by a Released Entity);

c. Claims by Releasors against non-Parties shall not result in additional payments by Released Entities, whether through contribution, indemnification or any other means; and

d. the Agreement meets the requirements of the Uniform Contribution Among Joint Tortfeasors Act and any similar state law or doctrine that reduces or discharges a released party's liability to any other parties.

The provisions of this Section XI.B are to be implemented consistent with these principles. This Agreement and the releases and dismissals provided for herein are made in good faith.

2. No Released Entity shall seek to recover for amounts paid under this Agreement based on indemnification, contribution, or any other theory from a manufacturer, pharmacy, hospital, pharmacy benefit manager, health insurer, third-party vendor, trade association, distributor, or health care practitioner; *provided* that a Released Entity shall be relieved of this prohibition with respect to any entity that asserts a Claim-Over against it. For the avoidance of doubt, nothing herein shall prohibit a Released Entity from recovering amounts owed pursuant to insurance contracts.

3. If any Releasor enters into a Non-Party Settlement on or after the Effective Date, including in any bankruptcy case or through any plan of reorganization (whether individually or as a class of creditors), the Releasor will include (or in the case of a Non-Party Settlement made in connection with a bankruptcy case, will cause the debtor to include), unless prohibited from doing so under applicable law, in the Non-Party Settlement a prohibition on contribution or indemnity of any kind substantially equivalent to that required from CVS in Section XI.B.2, or a release from such Non-Released Entity in favor of the Released Entities (in a form equivalent to the releases contained in this Agreement) of any Claim-Over. The obligation to obtain the prohibition and/or release required by this subsection is a material term of this Agreement.

4. If any Releasor obtains a judgment with respect to a Non-Party Covered Conduct Claim against a Non-Released Entity that does not contain the prohibition described in Section XI.B.3, or any Releasor files a Non-Party Covered Conduct Claim against a Non-Released Entity in bankruptcy or a Releasor is prevented for any reason from obtaining a prohibition/release in a Non-Party Settlement as provided in Section XI.B.3, and such Non-Released Entity asserts a Claim-Over against a Released Entity, the Released Entity shall be relieved of the prohibition in Section XI.B.2 with respect to that Non-Released Entity and that Releasor and CVS shall take the following actions to ensure that

the Released Entities do not pay more with respect to Alleged Harms and/or Covered Conduct to Releasors or to Non-Released Entities than the amounts owed under this Agreement by CVS:

a. CVS shall notify that Releasor of the Claim-Over within sixty (60) calendar days of the assertion of the Claim-Over or sixty (60) calendar days of the Effective Date of this Agreement, whichever is later;

b. CVS and that Releasor shall meet and confer concerning the means to hold Released Entities harmless and ensure that they are not required to pay more with respect to Alleged Harms and/or Covered Conduct than the amounts owed by CVS under this Agreement;

c. That Releasor and CVS shall take steps sufficient and permissible under the law of the State of the Releasor to hold Released Entities harmless from the Claim-Over and ensure Released Entities are not required to pay more with respect to Alleged Harms and/or Covered Conduct than the amounts owed by CVS under this Agreement. Such steps may include, where permissible:

(i) Filing of motions to dismiss or such other appropriate motion by CVS or Released Entities, and supported by Releasors, in response to any claim filed in litigation or arbitration;

(ii) Reduction of that Releasors' Claim and any judgment it has obtained or may obtain against such Non-Released Entity by whatever amount is necessary to extinguish such Claim-Over under applicable law, up to the amount that Releasor has obtained, may obtain, or has authority to control from such Non-Released Entity;

(iii) Placement into escrow of funds paid by the Non-Released Entities such that those funds are available to satisfy the Claim-Over;

(iv) Return of monies paid by CVS to that Releasor under this Agreement to permit satisfaction of a judgment against or settlement with the Non-Released Entity to satisfy the Claim-Over;

(v) Payment of monies to CVS by that Releasor to ensure CVS is held harmless from such Claim-Over, up to the amount that Releasor has obtained, may obtain, or has authority to control from such Non-Released Entity;

(vi) Credit to CVS under this Agreement to reduce the overall amounts to be paid under the Agreement such that it is held harmless from the Claim-Over; and

(vii) Such other actions as that Releasor and CVS may devise to hold CVS harmless from the Claim-Over.

d. The actions of that Releasor and CVS taken pursuant to clause (c) above must, in combination, ensure CVS is not required to pay more with respect to Alleged Harms and/or Covered Conduct than the amounts owed by CVS under this Agreement.

e. In the event of any dispute over the sufficiency of the actions taken pursuant to clause (c) above, Releasor and CVS may seek review by the National Arbitration Panel, or, upon consent of the parties to the dispute, by the state court where the relevant Consent Judgment was filed. The National Arbitration Panel shall have authority to order a remedy, including one or more of the actions specified in clause (c), sufficient to hold Released Entities fully harmless. In the event that the Panel's actions do not result in Released Entities being held fully harmless, CVS shall have a claim for breach of this Agreement by Releasors, with the remedy being payment of sufficient funds to hold CVS harmless from the Claim-Over. For the avoidance of doubt, the prior sentence does not limit or eliminate any other remedy that CVS may have.

5. To the extent that the Claim-Over is based on a contractual indemnity, the obligations under Section XI.B.4 shall extend solely to a Non-Party Covered Conduct Claim against a pharmacy, distributor, clinic, hospital or other purchaser or dispenser of Products, a manufacturer that sold Products, a consultant, and/or a pharmacy benefit manager or other third-party payor. CVS shall notify the Settling States, to the extent permitted by applicable law, in the event that any of these types of Non-Released Entity asserts a Claim-Over arising out of contractual indemnity against it.

C. *Indemnification and Contribution Prohibited.* No Released Entity shall seek to recover for amounts paid under this Agreement based on indemnification, contribution, or any other theory, from a manufacturer, pharmacy, hospital, pharmacy benefit manager, health insurer, third-party vendor, trade association, distributor, or health care practitioner; *provided* that a Released Entity shall be relieved of this prohibition with respect to any entity that asserts a Claim-Over against it. For the avoidance of doubt, nothing herein shall prohibit a Released Entity from recovering amounts owed pursuant to insurance contracts. For the avoidance of doubt, nothing herein shall prohibit a Released Entity from recovering amounts owed pursuant to insurance contracts.

D. *General Release*. In connection with the releases provided for in this Agreement, each Settling State (for itself and its Releasors) and Participating Subdivision (for itself and its Releasors) expressly waives, releases, and forever discharges any and all provisions, rights, and benefits conferred by any law of any State or territory of the United States or other jurisdiction, or principle of common law, which is similar, comparable, or equivalent to § 1542 of the California Civil Code, which reads:

> **General Release; extent**. A general release does not extend to claims that the creditor or releasing party does not know or suspect to exist in his or her favor at the time of executing the release and

> that if known by him or her, would have materially affected his or her settlement with the debtor or released party.

A Releasor may hereafter discover facts other than or different from those which it knows, believes, or assumes to be true with respect to the Released Claims, but each Settling State (for itself and its Releasors) and Participating Subdivision (for itself and its Releasors) hereby expressly waives and fully, finally, and forever settles, releases and discharges, upon the Effective Date, any and all Released Claims that may exist as of such date even if Releasors do not know or suspect such claims to exist, whether through ignorance, oversight, error, negligence or through no fault whatsoever, and even if knowledge of the existence of such claims would materially affect the Settling States' decision to enter into this Agreement or the Participating Subdivisions' decision to participate in this Agreement.

E. *Assigned Interest Waiver*. To the extent that any Settling State has any direct or indirect interest in any rights of a third-party that is a debtor under the Bankruptcy Code as a result of a claim arising out of Covered Conduct or Alleged Harms by way of assignment or otherwise, including as a result of being the beneficiary of a trust or other distribution entity, to assert claims against CVS (whether derivatively or otherwise), under any legal or equitable theory, including for indemnification, contribution, or subrogation, such Settling State waives the right to assert any such claim, or to receive a distribution or any benefit on account of such claim and such claim, distribution, or benefit shall be deemed assigned to CVS.

F. *Res Judicata*. Nothing in this Agreement shall be deemed to reduce the scope of the res judicata or claim preclusive effect that the settlement memorialized in this Agreement, and/or any Consent Judgment or other judgment entered on this Agreement, gives rise to under applicable law.

G. *Representation and Warranty*. The signatories hereto on behalf of their respective Settling States expressly represent and warrant that they have (or will obtain no later than the Initial Subdivision Participation Date) the authority to settle and release, to the maximum extent of the State's power, all Released Claims of (1) their respective Settling States, (2) all past and present executive departments, state agencies, divisions, boards, commissions and instrumentalities with the regulatory authority to enforce state and federal controlled substances acts, and (3) any of their respective Settling State's past and present executive departments, agencies, divisions, boards, commissions and instrumentalities that have the authority to bring Claims related to Alleged Harms and/or Covered Conduct seeking money (including abatement and/or remediation) or revocation of a pharmaceutical distribution or dispensing license. For the purposes of clause (3) above, executive departments, agencies, divisions, boards, commissions, and instrumentalities are those that are under the executive authority or direct control of the State's Governor. Also for the purposes of clause (3), a release from a State's Governor, to be materially similar to that in Exhibit X, is sufficient to demonstrate that the appropriate releases have been obtained.

H. *Effectiveness*. The releases set forth in this Agreement shall not be impacted in any way by any dispute that exists, has existed, or may later exist between or among the Releasors. Nor shall such releases be impacted in any way by any current or future law, regulation, ordinance, or court or agency order limiting, seizing, or controlling the distribution or use of the Settlement

Fund or any portion thereof, or by the enactment of future laws, or by any seizure of the Settlement Fund or any portion thereof.

I. *Cooperation*. Settling States will meet and confer with CVS and simultaneously make reasonable efforts to resolve any action filed by a Subdivision involving any Covered Conduct, Alleged Harms, or a Product that remains pending against CVS after the Initial Subdivision Participation Date. Releasors (i) will not encourage any person or entity to bring or maintain any Released Claim against any Released Entity and (ii) will reasonably cooperate with and not oppose any effort by a Released Entity to secure the prompt dismissal of any and all Released Claims.

J. *Non-Released Claims.* Notwithstanding the foregoing or anything in the definition of Released Claims, this Agreement does not waive, release or limit any criminal liability, Claims for liability under tax law, Claims under securities law by a State Releasor as investor, Claims against parties who are not Released Entities, Claims by private individuals, and any claims arising under this Agreement for enforcement of this Agreement. Nothing in this Agreement precludes the Released Entities from asserting, in an action arising from or relating to Claims by private individuals, any defense or argument based on this Agreement that is available under applicable law.

XII. Later Litigating Subdivisions; Non-Settling States

A. *Released Claims against Released Entities.* If a Later Litigating Subdivision in a Settling State maintains a lawsuit for a Released Claim against a Released Entity after the Initial Subdivision Participation Date, the Released Entity shall take ordinary and reasonable measures to defend the action, including filing a Threshold Motion with respect to the Released Claim. The Released Entity shall further notify the Settling State and Settlement Fund Administrator immediately upon notice of a Later Litigating Subdivision bringing a lawsuit for a Released Claim and shall not oppose a Settling State's submission in support of the Threshold Motion. CVS shall give the relevant Settling State a reasonable opportunity to extinguish the Released Claims without any payment or any other obligations being imposed upon any Released Entities (apart from the Global Settlement Amount payable by CVS under the Agreement or the Injunctive Relief Terms incurred by it). The relevant Settling State and CVS shall confer and use reasonable efforts to promptly resolve the lawsuit so that it is dismissed with prejudice. Nothing in this subsection creates an obligation for a Settling State to make a monetary payment or incur any other obligation to an entity filing a lawsuit.

B. *Non-Settling States.* Non-Settling States shall not be eligible for any payments or have any rights in connection with this Agreement.

C. *Settlement Class Resolution Opt Outs.* If a Settling State is eligible for Incentive Payment A on the basis of a Settlement Class Resolution, and a Primary Subdivision that opted out of the Settlement Class Resolution maintains a lawsuit asserting a Released Claim against a Released Entity, the following shall apply. The Released Entity shall take ordinary and reasonable measures to defend the action, including filing a Threshold Motion with respect to the Released Claim. The Settling State shall seek to obtain either dismissal of the lawsuit in cooperation with CVS, or a release of the Primary Subdivision's claims. If the lawsuit asserting a Released Claim

either survives a Threshold Motion or has an unresolved Threshold Motion fewer than sixty (60) calendar days prior to the scheduled start of a trial involving a Released Claim, and is resolved with finality on terms requiring payment by the Released Entity, CVS shall receive a dollar-for-dollar offset for the amount paid against its obligation to make remaining Incentive Payment A payments that would be apportioned to that Settling State and to its Subdivisions.

D. *Revoked Bar, Settlement Class Resolution, or Case-Specific Resolution.* If CVS made any Annual Payments that included any incentive payments earned as a result of the existence of a Bar, Settlement Class Resolution, or Case-Specific Resolution in a Settling State, and there is subsequently a Revocation Event with respect to that Bar, Settlement Class Resolution, or Case-Specific Resolution after the determination of the amount of such Annual Payment, that Settling State shall seek to obtain a release of the claims impacted by the Revocation Event, including but not limited to defending the legality of the Bar, obtaining a dismissal of the claims made against the Released Entity, and obtaining releases from impacted Subdivisions. If the Settling State is unable to defend the legality of the bar and/or obtain releases form all impacted Subdivisions, then CVS shall receive a dollar-for-dollar offset against the portion of remaining Annual Payments that would be allocated to that Settling State and its Participating Subdivisions. This offset will be calculated as the dollar amount difference between (1) the total amount of incentive payments paid by CVS by virtue of the Bar, Settlement Class Resolution, or Case-Specific Resolution subject to the Revocation Event and (2) the total amount of incentive payments that would have been due from CVS during that time had the Bar, Settlement Class Resolution, or Case-Specific Resolution subject to the Revocation Event not been in effect. The amount of incentive payments that would have been due, referenced in clause (2) above, will be calculated one hundred eighty (180) calendar days after the Revocation Event; for purposes of calculating the amount of incentive payments that would have been due, any relevant Subdivision shall be included as a Participating Subdivision if: (1) its Released Claims are extinguished by any subsequent Bar, Settlement Class Resolution, or Case-Specific Resolution in effect as of the date of such calculation, or (2) it becomes a Participating Subdivision (in addition to all other Participating Subdivisions) prior to the date of such calculation.

E. *Certain Taxes.* Amounts paid by CVS under an Opioid Tax in a Settling State in a Payment Year shall give rise to a dollar-for-dollar offset against CVS's obligation to pay its share of the Annual Payment in that Payment Year that would be allocated to the taxing Settling State or its Participating Subdivisions. If such amounts paid exceed CVS's allocable share of the Annual Payment allocable to the taxing Settling State or its Participating Subdivisions in that Payment Year, the excess shall carry forward as an offset against its allocable share of remaining Annual Payments that would be allocated to the taxing Settling State or its Participating Subdivisions. CVS represents that as of December 2, 2022, there is no Opioid Tax currently in effect in any Eligible State that would give rise to this offset provision.

XIII. Miscellaneous

A. *Population of General-Purpose Governments.* The population figures for General-Purpose Governments shall be the published U.S. Census Bureau's population estimates for July

1, 2019, released May 2020. These population figures shall remain unchanged during the term of this Agreement.[13]

B. *Population of Special Districts.* For any purpose in this Agreement in which the population of a Special District is used other than Section IV.H.6.d and Section IV.H.9.d: (a) School Districts' populations will be measured by the number of students enrolled who are eligible under the Individuals with Disabilities Education Act ("*IDEA*") or Section 504 of the Rehabilitation Act of 1973; (b) Health Districts' and Hospital Districts' populations will be measured at twenty-five percent (25%) of discharges; and (c) all other Special Districts' (including fire districts' and library districts') populations will be measured at ten percent (10%) of the population served. For the avoidance of doubt, this means that California healthcare districts will be measured at ten percent (10%) of their membership. CVS and the Enforcement Committee shall meet and confer in order to agree on data sources for purposes of this Section XIII.B prior to the Preliminary Agreement Date.

C. *Population Associated with Sheriffs.* For any purpose in this Agreement in which the population associated with a lawsuit by a sheriff is used, the population will be measured at twenty percent (20%) of the capacity of the jail(s) operated by the sheriff.

D. *No Admission.* The Parties intend the settlement as described herein to be a final and complete resolution of all disputes between CVS and all Releasors. CVS is entering into this Agreement solely for the purposes of settlement, to resolve all Actions and Released Claims and thereby avoid significant expense, inconvenience and uncertainty. CVS denies the allegations in the Actions and denies any civil or criminal liability in the Actions. Nothing contained herein may be taken as or deemed to be an admission or concession by CVS of: (i) any violation of any law, regulation, or ordinance; (ii) any fault, liability, or wrongdoing; (iii) the strength or weakness of any Claim or defense or allegation made in any Action, or in any other past, present or future proceeding relating to any Covered Conduct, Alleged Harms, or any Product; (iv) the legal viability of the claims and theories in any Action, including but not limited to the legal viability of the relief sought; or (v) any other matter of fact or law. Nothing in this Agreement shall be construed or used to prohibit any Released Entity from engaging in the conduct of its business relating to any Product in accordance with the Injunctive Relief Terms and applicable laws and regulations.

E. *Most-Favored-Nation Provision.*

1. If, after the Effective Date, CVS enters into any settlement agreement with any Non-Settling State that resolves Claims similar in scope to the Claims released by a Settling State under this Agreement on overall payment terms that are more favorable to such Non-Settling State than the overall payment terms of the Agreement (after due consideration of relevant differences in population or other appropriate factors), then the Settling States may elect to seek review, pursuant to Section XIII.E.3, of the overall payment terms of this Agreement and the Non-Settling State agreement so that such

[13] The estimates for counties and parishes were accessed at https://www.census.gov/data/datasets/time-series/demo/popest/2010s-countiestotal.html. The estimates for cities and towns can currently be found at https://www.census.gov/data/datasets/time-series/demo/popest/2010s-total-cities-and-towns.html.

Settling State(s) may obtain, with respect to CVS, overall payment terms at least as favorable as those obtained by such Non-Settling State. "*Overall payment terms*" refers to consideration of all payment terms of the two agreements, taken together, including, but not limited to the amounts of payments, the timing of payments, and conditions or contingencies on payments.

2. For any settlement with a Non-Settling State involving Released Claims that is entered into after the Effective Date, CVS shall provide the Enforcement Committee with a copy of the settlement agreement or relevant consent judgment within thirty (30) calendar days of the consummation of such settlement. The Enforcement Committee will promptly distribute such copy to all Settling States.

3. In the event that one or more Settling State(s) believes that the overall payment terms of an agreement by CVS with a Non-Settling State are more favorable to the Non-Settling State, based on the totality of the considerations set forth in Section XIII.E.1, the Settling State(s) and CVS shall engage in the following process:

a. The Settling State(s) shall provide notice, within sixty (60) calendar days of the date on which a settlement agreement or consent judgment is provided to the Enforcement Committee, to CVS of its (their) intent to seek revision of this Agreement to provide payment terms that are, on an overall basis, as favorable as those obtained by the Non-Settling State. To the extent allowed by law, such notice shall be confidential and not disclosed publicly and shall provide, in detail, the basis for the Settling State's (Settling States') belief that it (they) is (are) entitled to a revision of the Agreement.

b. CVS shall, within thirty (30) calendar days, provide a response to the Settling State(s), explaining its position, in detail, as to whether the Settling State(s) is (are) entitled to more favorable overall payment terms than those provided for in this Agreement.

c. In the event the Settling State(s) and CVS do not reach agreement as to the application of Section XIII.E.1, the Settling State(s) may petition the National Arbitration Panel to seek a ruling from the Panel as to the applicability of Section XIII.E.1, provided that the Settling State(s) may seek such review only if at least five (5) Settling States co-sign the petition. The Panel shall consider submissions and argument by the parties pursuant to the procedures set forth in Section VI.F.3.

d. The Settling State(s) and CVS shall be bound by the determination of the National Arbitration Panel.

4. This Section XIII.E does not apply to, and there is no ability of any Settling State to seek or obtain revision of this Agreement based on, any Non-Settling State agreement with CVS that is entered into with: (a) a Non-Settling State after a date ninety (90) calendar days prior to the scheduled start date of a trial between CVS and the Non-Settling State or any severed or bifurcated portion thereof, provided that, where, in order

to complete a settlement, a Non-Settling State and CVS jointly request an adjournment of the scheduled start date of a trial within ninety (90) calendar days of that date, this exception will apply as if the trial date had not been adjourned; (b) a Non-Settling State that previously litigated to judgment a case related to opioids against any manufacturer, distributor, or pharmacy; or (c) a Non-Settling State that has obtained any court order or judicial determination that grants judgment (in whole or in part) against CVS. For avoidance of doubt, the National Arbitration Panel shall have no power to review agreements described in this paragraph.

5. This Section XIII.E does not apply to, and there is no ability of any Settling State to seek or obtain revision of this Agreement based on, (a) any agreement between CVS and Non-Participating Subdivisions, and (b) any global tribal settlement or any agreement between CVS and any federally-recognized tribe.

6. This Section XIII.E will not apply to any agreement entered into more than eighteen (18) months after the Effective Date.

F. *Tax Cooperation and Reporting*.

1. Upon request by CVS, the Settling States and Participating Subdivisions agree to perform such further acts and to execute and deliver such further documents as may be reasonably necessary for CVS to establish the statements set forth in Section V.F to the satisfaction of their tax advisors, their independent financial auditors, the Internal Revenue Service, or any other governmental authority, including as contemplated by Treasury Regulations Section 1.162-21(b)(3)(ii) and any subsequently proposed or finalized relevant regulations or administrative guidance.

2. Without limiting the generality of Section XIII.F.1, each Settling State and Participating Subdivision shall cooperate in good faith with CVS with respect to any tax claim, dispute, investigation, audit, examination, contest, litigation, or other proceeding relating to this Agreement.

3. The Designated State, on behalf of all Settling States and Participating Subdivisions, shall designate one of its officers or employees to act as the "appropriate official" within the meaning of Treasury Regulations Section 1.6050X-1(f)(1)(ii)(B) (the "*Appropriate Official*"). The Designated State shall direct and ensure that the Appropriate Official timely (a) files (i) at the time this Agreement becomes binding on the Parties, an IRS Form 1098-F in the form attached as Exhibit U with respect to CVS and (ii) any legally required returns or amended returns with any applicable governmental authority, or any returns requested by CVS, and (b) provides to CVS a copy of (i) the IRS Form 1098-F filed with respect to CVS and (ii) any legally required written statement pursuant to any applicable law and any other document referred to in clause (a)(ii) above. Any such form, return, or statement shall be prepared and filed in a manner fully consistent with Section V.F.

4. Any return, amended return, or written statement filed or provided pursuant to Section XIII.F.3, and any similar document, shall be prepared and filed in a manner

consistent with reporting the Global Settlement Amount as the "Total amount to be paid" pursuant to this Agreement in Box 1 of IRS Form 1098-F and the Total Remediation Amount as "Restitution/remediation amount" in Box 3 of IRS Form 1098-F, as reflected in the attached Exhibit U. If the Designated State or Appropriate Official shall be required to file any return, amended return, or written statement contemplated by this Section XIII.F other than an IRS Form 1098-F in the form attached as Exhibit U, the Designated State shall direct and ensure that the Appropriate Official provides to CVS a draft of such return, amended return, or written statement no later than sixty (60) calendar days prior to the due date thereof, and shall accept any reasonable revisions from CVS on the return, amended return, or written statement.

5. For the avoidance of doubt, neither CVS nor the Settling States and Participating Subdivisions make any warranty or representation to any Settling State, Participating Subdivision, or Releasor as to the tax consequences of the payment of the Total Remediation Amount (or any portion thereof).

G. *No Third-Party Beneficiaries.* Except as expressly provided in this Agreement, no portion of this Agreement shall provide any rights to, or be enforceable by, any person or entity that is not a Settling State or Released Entity. No Settling State may assign or otherwise convey any right to enforce any provision of this Agreement.

H. *Calculation*. Any figure or percentage referred to in this Agreement shall be carried to seven decimal places.

I. *Construction*. None of the Parties and no Participating Subdivision shall be considered to be the drafter of this Agreement or of any of its provisions for the purpose of any statute, case law, or rule of interpretation or construction that would or might cause any provision to be construed against the drafter of this Agreement. The headings of the provisions of this Agreement are not binding and are for reference only and do not limit, expand, or otherwise affect the contents or meaning of this Agreement.

J. *Cooperation*. Each Party and each Participating Subdivision agrees to use reasonable efforts and to cooperate with the other Parties and Participating Subdivisions to cause this Agreement and Consent Judgments to become effective, to obtain all necessary approvals, consents and authorizations, if any, and to execute all documents and to take such other action as may be appropriate in connection herewith. Consistent with the foregoing, each Party and each Participating Subdivision agrees that it will not directly or indirectly assist or encourage any challenge to this Agreement or any Consent Judgment by any other person, and will support the integrity and enforcement of the terms of this Agreement and the Consent Judgments.

K. *Entire Agreement*. This Agreement, including its exhibits and any other attachments, embodies the entire agreement and understanding between and among the Parties and Participating Subdivisions relating to the subject matter hereof and supersedes (1) all prior agreements and understandings relating to such subject matter, whether written or oral and (2) all purportedly contemporaneous oral agreements and understandings relating to such subject matter.

L. *Execution*. This Agreement may be executed in counterparts and by different signatories on separate counterparts, each of which shall be deemed an original, but all of which shall together be one and the same Agreement. One or more counterparts of this Agreement may be delivered by facsimile or electronic transmission with the intent that it or they shall constitute an original counterpart hereof. One or more counterparts of this Agreement may be signed by electronic signature.

M. *Good Faith and Voluntary Entry*. Each Party warrants and represents that it negotiated the terms of this Agreement in good faith. Each of the Parties and Participating Subdivisions warrants and represents that it freely and voluntarily entered into this Agreement without any degree of duress or compulsion. The Parties and Participating Subdivisions state that no promise of any kind or nature whatsoever (other than the written terms of this Agreement) was made to them to induce them to enter into this Agreement.

N. *Legal Obligations.* Nothing in this Agreement shall relieve CVS of the obligation to comply with all state and federal laws, regulations or rules, nor does any provision herein permit any acts or practices prohibited by such laws, regulations, or rules. Except with respect to the Injunctive Relief Terms, in the event of a conflict between this Agreement and any requirement or requirements of federal, state, or local laws, such that CVS cannot comply with this Agreement without violating such a requirement or requirements, CVS shall document such conflicts and notify the Attorney(s) General of the relevant Settling State(s) that it intends to comply with the requirement or requirements to the extent necessary to eliminate the conflict. With respect to the Injunctive Relief Terms, in the event of such a conflict, the procedures set forth in the Injunctive Relief Terms will be followed.

O. *No Prevailing Party.* The Parties and Participating Subdivisions each agree that they are not the prevailing party in this action, for purposes of any claim for fees, costs, or expenses as prevailing parties arising under common law or under the terms of any statute, because the Parties and Participating Subdivisions have reached a good faith settlement. The Parties and Participating Subdivisions each further waive any right to challenge or contest the validity of this Agreement on any ground, including, without limitation, that any term is unconstitutional or is preempted by, or in conflict with, any current or future law. Nothing in the previous sentence shall modify, or be construed to conflict with, Section XIII.N.

P. *Non-Admissibility*. Neither this Agreement nor any act performed or document executed pursuant to or in furtherance of this Agreement: (i) is or may be deemed to be or may be used as an admission or evidence relating to any matter of fact or law alleged in the Actions, the strength or weakness of any claim or defense or allegation made in those cases, or any wrongdoing, fault, or liability of any Released Entities; or (ii) is or may be deemed to be or may be used as an admission or evidence relating to any liability, fault or omission of Released Entities in any civil, criminal or administrative proceeding in any court, administrative agency or other tribunal. Neither this Agreement nor any act performed or document executed pursuant to or in furtherance of this Agreement shall be admissible in any proceeding for any purpose, except to enforce the terms of this Agreement, and except that Released Entities may file or use this Agreement in any action (1) involving a determination regarding insurance coverage; (2) involving a determination of the taxable income or tax liability of any Released Entities; (3) to support a defense or counterclaim

based on principles of res judicata, collateral estoppel, release, good-faith settlement, judgment bar or reduction or on any other theory of claim preclusion or issue preclusion or similar defense or counterclaim; (4) to support a claim for contribution and/or indemnification; or (5) to support any other argument or defense by a Released Entities that the Remediation Payment provides a measure of compensation for Alleged Harms or otherwise satisfy the relief sought.

Q. *Notices.* All notices or other communications under this Agreement shall be in writing (including, but not limited to, electronic communications) and shall be given to the recipients indicated below:

For the Attorney(s) General:

Josh Stein, Attorney General
North Carolina Department of Justice
Attn: Daniel Mosteller, Deputy General Counsel
PO Box 629
Raleigh, NC 27602
Dmosteller@ncdoj.gov

Dave Yost, Attorney General
Ohio Attorney's General Office
Attn: Jonathan Blanton, First Assistant Attorney General
30 East Broad Street
Columbus, OH 43215
Jonathan.Blanton@OhioAGO.gov

Letitia James, Attorney General
New York State Office of the Attorney General
Attn: Jennifer Levy, First Deputy Attorney General
28 Liberty Street
New York, NY 10005
Jennifer.Levy@ag.ny.gov

For the Plaintiffs' Executive Committee:

Paul T. Farrell, Jr.
Farrell & Fuller, LLP
270 Munoz Rivera Ave., Suite 201
San Juan, Puerto Rico 00918
paul@farrellfuller.com

Jayne Conroy
Simmons Hanly Conroy LLC
112 Madison Avenue, 7th Floor
New York, NY 10016-7416
JConroy@simmonsfirm.com

Joseph F. Rice
Motley Rice LLC
28 Bridgeside Blvd.
Mount Pleasant, SC 29464
jrice@motleyrice.com

For CVS:

Elizabeth Ferguson
Senior Vice President and Deputy General Counsel
CVS Health Corporation
One CVS Drive
Woonsocket, RI 02895
betsy.ferguson@cvshealth.com

Notices to CVS's attorneys shall be delivered to:

Eric Delinsky
Zuckerman Spaeder LLP
1800 M Street, NW, Suite 1000
Washington, DC 20036-5807
edelinsky@zuckerman.com

Perry Rowthorn
Jepsen Rowthorn LLP
PO Box 370496
West Hartford, CT 06137
perry@jeprow.com

Any Party or the Plaintiffs' Executive Committee may change or add the contact information of the persons designated to receive notice on its behalf by notice given (effective upon the giving of such notice) as provided in this Section XIII.Q.

R. *No Waiver*. The waiver of any rights conferred hereunder shall be effective only if made by written instrument executed by the waiving Party or Parties. The waiver by any Party of any breach of this Agreement shall not be deemed to be or construed as a waiver of any other breach, whether prior, subsequent, or contemporaneous, nor shall such waiver be deemed to be or construed as a waiver by any other Party.

S. *Severability.* In the event any one or more immaterial provisions of this Agreement shall for any reason be held to be invalid, illegal or unenforceable in any respect, such invalidity, illegality or unenforceability shall not affect any other provision of this Agreement.

T. *Preservation of Privilege.* Nothing contained in this Agreement or any Consent Judgment, and no act required to be performed pursuant to this Agreement or any Consent

Judgment, is intended to constitute, cause, or effect any waiver (in whole or in part) of any attorney-client privilege, work product protection, or common interest/joint defense privilege, and each Party and Participating Subdivision agrees that it shall not make or cause to be made in any forum any assertion to the contrary.

U. *Successors*.

1. This Agreement shall be binding upon, and inure to the benefit of, the Parties and their respective successors and assigns.

2. CVS shall not sell the majority of its voting stock or substantially all its assets without obtaining the acquiror's agreement that it will constitute a successor with respect to CVS's obligations under this Agreement.

3. CVS shall not in one (1) transaction, or a series of related transactions, sell, or transfer assets (other than sales or transfers of inventories, or sales or transfers to an entity owed directly or indirectly by CVS) having a fair market value equal to twenty-five percent (25%) or more of the consolidated assets of CVS where the sale or transfer transaction is announced after the Effective Date, is not for fair consideration, and would foreseeably and unreasonably jeopardize CVS's ability to make the payments under this Agreement that are due on or before the third Payment Date following the close of a sale or transfer transaction. The above restriction shall not apply if CVS obtains the acquiror's agreement that it will be either a guarantor of or successor to the percentage of CVS's remaining payment obligations under this Agreement equal to the percentage of CVS's consolidated assets being sold or transferred in such transaction. Percentages under this section shall be determined in accordance with the United States generally accepted accounting principles and as of the date of CVS's most recent publicly filed consolidated balance sheet prior to the date of entry into the sale or transfer agreement at issue. This Section XIII.U.3 shall be enforceable solely by the Enforcement Committee, and any objection under this Section XIII.U.3 not raised within twenty (20) calendar days from the date that CVS transmits notice of the transaction to the Enforcement Committee is waived. Any dispute under this Section XIII.U.3 shall be a National Dispute as described in Section VI.F.3 and must be raised exclusively with the National Arbitration Panel as described therein within twenty (20) calendar days of the announcement, and the sole remedy shall be an order enjoining the transaction.

V. *Waiver*. CVS, for good and valuable consideration the receipt of which is acknowledged, hereby (a) waives, foregoes and relinquishes all rights to utilize and/or seek relief under any of the following laws of the State of Texas for the restructuring of its debts or liabilities related to Released Claims, Claims that would have been Released Claims if they had been brought by a Releasor against a Released Entity before the Effective Date, or this Agreement: Tex. Bus. Orgs. Code § 10.003 (Contents of Plan of Merger: More Than One Successor) or any other statute of Subchapter A of Chapter 10 of Tex. Bus. Orgs. Code to the extent such statute relates to multi-successor mergers (and/or any other similar laws or statutes in any other state or territory); Tex. Bus. Orgs. Code §§ 11.01–11.414 (Winding Up and Termination of Domestic Entity); or Tex. Bus. & Com. Code §§ 23.01–23.33 (Assignments for the Benefit of Creditors) (collectively, the "*Texas*

Statutes"), and (b) agrees, warrants and represents that it will not file, request or petition for relief under the Texas Statutes related to its debts or liabilities related to Released Claims, Claims that would have been Released Claims if they had been brought by a Releasor against a Released Entity before the Effective Date, or this Agreement, in each case until such time as all of CVS's payment obligations incurred hereunder are satisfied in full. The foregoing waiver and relinquishment includes, without limitation, until such time as all of CVS's payment obligations incurred hereunder are satisfied in full, CVS's rights to execute a divisional merger or equivalent transaction or restructuring related to its debts or liabilities related to Released Claims, Claims that would have been Released Claims if they had been brought by a Releasor against a Released Entity before the Effective Date, or this Agreement that in each case has the intent or foreseeable effect of (i) separating material assets from material liabilities and (ii) assigning or allocating all or a substantial portion of those liabilities to any subsidiary or affiliate that files for relief under chapter 11 of the Bankruptcy Code, or pursuant to which such subsidiary or affiliate that files for relief under chapter 11 of the Bankruptcy Code would be assuming or retaining all or a substantial portion of those liabilities.

W. *Modification, Amendment, Alteration.* In the event the Plaintiffs' Executive Committee, the Executive Committee of the State Attorneys General, or CVS concludes prior to January 18, 2023 that technical corrections are required to this Agreement, the Plaintiffs' Executive Committee, the Executive Committee of the State Attorneys General, and CVS shall meet and confer and make such amendments as they agree are appropriate. Except as otherwise provided in this Agreement, after the Reference Date, any modification, amendment, or alteration of this Agreement by the Parties shall be binding only if evidenced in writing signed by CVS, along with the signatures of at least two-thirds of the Settling States along with a representation from each such Settling State that either: (1) the Advisory Committee or similar entity established or recognized by that Settling State (either pursuant to Section V.E.2.d, by a State-Subdivision Agreement, or by statute) voted in favor of the modification, amendment or alteration of this Agreement including at least one member appointed by the Participating Subdivisions listed on Exhibit G; or (2) in States without any Advisory Committee, that 50.1% (by population) of the Participating Subdivisions listed on Exhibit G expressed approval of the modification, amendment, or alteration of this Agreement in a writing.

X. *Termination.*

1. Unless otherwise agreed to by CVS and the Settling State in question, this Agreement or the Consent Judgment as to that Settling State and all of its terms (except Section XIII.P and any other non-admissibility provisions, which shall continue in full force and effect) shall be canceled and terminated with respect to the Settling State, and the Agreement and all orders issued by the courts in the Settling State pursuant to the Agreement shall become null and void and of no effect, only if one or more of the following conditions applies:

a. a Consent Judgment approving this Agreement without modification of any of the Agreement's terms has not been entered as to the Settling State by a court of competent jurisdiction on or before one hundred eighty (180) days after the Effective Date; or

b. this Agreement has been disapproved by a court of competent jurisdiction to which it was presented for approval and/or entry (or, in the event of an appeal from or review of a decision of such a court to approve this Agreement and the Consent Judgment, by the court hearing such appeal or conducting such review), and the time to appeal from such disapproval has expired, or, in the event of an appeal from such disapproval, the appeal has been dismissed or the disapproval has been affirmed by the court of last resort to which such appeal has been taken and such dismissal or disapproval has become no longer subject to further appeal (including, without limitation, review by the United States Supreme Court).

2. If this Agreement is terminated with respect to a Settling State for whatever reason pursuant to Section XIII.X.1, then:

a. an applicable statute of limitation or any similar time requirement (excluding any statute of repose) shall be tolled from the date the Settling State signed this Agreement until the later of the time permitted by applicable law or for one year from the date of such termination, with the effect that CVS and the Settling State in question shall be in the same position with respect to the statute of limitation as they were at the time the Settling State filed its action; and

b. CVS and the Settling State in question shall jointly move the relevant court of competent jurisdiction for an order reinstating the actions and claims dismissed pursuant to the terms of this Agreement governing dismissal, with the effect that CVS and the Settling State in question shall be in the same position with respect to those actions and claims as they were at the time the action or claim was stayed or dismissed.

3. Unless CVS and the Enforcement Committee agree otherwise, this Agreement, with the exception of the Injunctive Relief Terms that have their own provisions on duration, shall terminate as to all Parties after the Payment Date for Payment Year 10, *provided* that CVS has performed its payment obligations under the Agreement as of that date. Notwithstanding any other provision in this Section XIII.X.3 or in this Agreement, all releases under this Agreement will remain effective in perpetuity.

Y. *Governing Law.* Except (1) as otherwise provided in this Agreement or (2) as necessary, in the sole judgment of the National Arbitration Panel, to promote uniformity of interpretation for matters within the scope of the National Arbitration Panel's authority, this Agreement shall be governed by and interpreted in accordance with the respective laws of each Settling State, without regard to the conflict of law rules of such Settling State, that is seeking to enforce the Agreement against CVS or against which CVS is seeking enforcement. Notwithstanding any other provision in this subsection on governing law, any disputes relating to the Settlement Fund Escrow shall be governed by and interpreted in accordance with the law of the state where the escrow agent has its primary place of business.

EXHIBIT A

Alleged Harms

The following expert reports that were served in connection with the case captioned *In re: National Prescription Opiate Litigation*, No. 1:17-md-2804 (N.D. Ohio), provide non-exclusive examples of Alleged Harms:

1. Expert reports of G. Caleb Alexander, M.D., M.S., dated March 24, 2019, April 16, 2021, and August 22, 2022;

2. Expert reports of David Cutler dated March 25, 2019, April 16, 2021, April 21, 2021, May 10, 2021, and August 22, 2022;

3. Expert report of David Herzberg, Ph.D., dated April 16, 2021;

4. Expert reports of Katherine M. Keyes, Ph.D., dated March 25, 2019, April 16, 2021, June 2, 2021, and August 22, 2022;

5. Expert reports of Dr. Anna Lembke, M.D., dated March 25, 2019, April 16, 2021, and August 22, 2022;

6. Expert report of Nancy Young, Ph.D, M.S.W., dated March 25, 2019 and April 16, 2021;

7. Expert report of Harvey Rosen, dated April 16, 2021; and

8. Expert report of Professor Thomas McGuire dated March 25, 2019.

EXHIBIT B

Enforcement Committee Organization Bylaws

ARTICLE I

These bylaws constitute the code of rules adopted by the Settling States and Participating Subdivisions for the creation of an Enforcement Committee (the "Committee") to exist and operate during the term of the Agreement in connection with CVS and shall control the regulation and management of the Committee's affairs.

ARTICLE II
Purpose

The Committee is organized for the sole purpose of evaluating and taking such action as deemed reasonable, necessary, and appropriate by the members of the Committee on the matters delegated to the Committee under that certain Settlement Agreement between the Settling States and CVS dated December 9, 2022.

ARTICLE III
Members of the Committee

(1) Number of Members

The Committee will consist of sixteen (16) members (the "Members"). Upon majority resolution of the Committee, the number of Members may be increased or decreased from time to time, but in no event shall a decrease have the effect of decreasing the total number of Members to less than seven Members.

(2) Initial Members

The Committee initially will consist of ten (10) Settling State Members and six (6) Participating Subdivision Members; three (3) of the Participating Subdivisions shall be counties and three (3) shall be municipalities. The initial Settling State Members are representatives from: Connecticut, Delaware, Illinois, Indiana, Louisiana, New York, North Carolina, Ohio, Tennessee, and Texas. The initial Participating Subdivision Members are: [●]. Until fifteen (15) months from the Effective Date contained in the Settlement Agreement, the Participating Subdivisions may designate their outside counsel to serve as their representative. After fifteen (15) months from the Effective Date, an employee or official of the Participating Subdivision must be the designated as the representative of the Participating Subdivision.

(3) Term of Members

The term of office for Members of the Committee will be until the end of the term of the Settlement Agreement unless and until a Member withdraws or resigns from the Committee.

(4) Resignation

Any Member may resign at any time by delivering written notice to the Chairperson of the Committee. Such resignation shall take effect upon receipt or, if later, at the time specified in the notice.

(5) Removal

(a) Any Member may be removed without cause, at any time, by a majority of the entire Committee, at a Regular or Special Meeting called for that purpose. Any Member under consideration of removal must first be notified about the consideration by written notice at least five days prior to the meeting at which the vote takes place.

(b) In the event that any Member is not a Settling State or a Participating Subdivision or the Member subsequently becomes a Later Litigating Subdivision, the Member shall be removed immediately without notice or vote of the Committee.

(6) Vacancies

In the event of a vacancy, the Members of the same type (Settling State or Participating Subdivision) shall select another Settling State or Participating Subdivision to fill that Member's position.

(7) Compensation

Members shall not receive any salaries or other compensation for their services, but, by resolution of the Committee, may be reimbursed for any actual expenses incurred in the performance of their duties for the Committee, as long as a majority of disinterested Members approve the reimbursement. Any reimbursement shall be sought from the Settlement Fund Administrator.

ARTICLE IV
Conflicts of Interest and Code of Ethics

If a Member, agent, or employee of the Committee has a conflict of interest, he or she may not participate in a vote, discussion, or decision about the matter. Each Member shall follow any applicable state or local law with respect to conflicts, gifts, and ethics.

ARTICLE V
Committee Meetings

(1) Place of Meetings

Meetings of the Committee will be held at any place that the Chairperson may designate, including by telephonic or electronic means.

(2) Regular Meetings

Regular meetings of the Committee shall be held as deemed necessary by the Chairperson or any three members.

(3) Notice of Meetings

Written notice of the date, time, place and subject of each meeting must be provided to the Members at least 72 hours before the scheduled time of the meeting, except when there is an emergency or urgent public necessity.

(4) Quorum

A majority of the incumbent Members (not counting vacancies) shall constitute a quorum for the purposes of convening a meeting or conducting business.

(5) Voting and Proxy

When it is necessary to vote on any matter before the Committee, Members may vote by electronic means as provided in these Bylaws. Proxy voting is permitted. In order for a matter to pass, the matter must have a majority vote of Members present and must have at least one vote from a Settling State Member and a Participating Subdivision Member. In the event that there is a Quorum, but no Settling State or Participating Subdivision Member is present, then a matter may pass with a simple majority vote.

(6) Minutes

The Committee shall prepare and keep minutes. The minutes must state the subject of each deliberation and indicate each vote, order, decision, or other action taken.

ARTICLE VI
Officers

(1) Roster of Officers

The Committee shall have a Chairperson, a Vice Chairperson, and a Secretary. The Committee may have at its discretion, such other officers as may be appointed by the Members of the Committee. One person may hold two or more offices, except those serving as Chairperson.

(2) Election and Removal of Officers

All officers shall serve two-year terms. The election shall be conducted at the first meeting of the fiscal year. Officers shall remain in office until their successors have been selected. Officers may serve consecutive terms without limit. The election of officers shall be by majority vote of the Members of the Committee attending the meeting.

(3) Vacancies

If a vacancy occurs during the term of office for any elected officer, the Members of the Committee shall elect a new officer to fill the remainder of the term as soon as practical, by majority vote of Members present.

(4) Chairperson

The Chairperson will supervise and control the affairs of the Committee and shall exercise such supervisory powers as may be given him/her by the Members of the Committee. The Chairperson will perform all duties incident to such office and such other duties as may be provided in these bylaws or as may be prescribed from time to time by the Committee. The Chairperson shall preside at all meetings and shall exercise parliamentary control in accordance with Robert's Rules of Order.

(5) Vice Chairperson

The Vice Chairperson shall act in place of the Chairperson in the event of the Chairperson's absence, inability, or refusal to act, and shall exercise and discharge such other duties as may be required by the Committee. The Vice Chairperson shall serve as the parliamentarian and interpret any ambiguities of the bylaws.

(6) Secretary

The Secretary will keep and maintain all records related to the Committee and take minutes of all meetings.

(7) Records

All elected officers and committee chairpersons shall relinquish their records to the Chairperson immediately upon the completion of their term of office or completion of a project.

(8) Resignation

An officer may resign the office while not resigning membership from the Committee, by submitting a letter to the Chairperson. Vacancies occurring in any office shall be appointed for the remainder of the term.

ARTICLE VII
Duties

(1) Prior to the Effective Date

The Committee shall be responsible for any additional negotiations with CVS, including, but not limited to, negotiating extensions of any periods created by the Settlement Agreement, except that any additional negotiations related to the Injunctive Relief Terms (Exhibit [●]) shall be handled by the States Injunctive Relief Committee in accordance with the terms of Exhibit [●].

(2) After the Effective Date

The Committee shall establish procedures for the receipt of notices that a dispute exists concerning the Agreement and review of such disputes, pursuant to Section [●] of the Agreement. Members may engage with CVS, Settling States, and Participating Subdivisions attempting to resolve any dispute without further action by the Committee. The Committee may request additional information from CVS, Settling States, and Participating Subdivisions to the extent the Committee believes such information is necessary to understand, resolve, or provide advice related to a dispute. The Committee shall endeavor to provide advice relative to the dispute no later than 60 days after receipt of notice.

ARTICLE VIII
Rules of Procedure

The proceedings and business of the Committee shall be governed by Robert's Rules of Order unless otherwise waived by the Committee.

ARTICLE IX
Operations

(1) Records

The Committee will keep correct and complete records and will also keep minutes of the proceedings of the Committee meetings and Committees. The Committee will keep such records at its principal place of business at a place designated by the Chairperson**.**

All elected officers and committee chairpersons shall relinquish their records to the Chairperson, immediately upon the completion of their term of office.

(2) Inspection of Books and Records

The minutes of a meeting are public records and shall be available for public inspection and copying on request to the Committee's Chairperson or the Chairperson's designee.

(3) Amendments

The bylaws may be amended at any time by a vote of a majority of Members present and must have at least one vote from a Settling State Member and a Participating Subdivision Member. In the event that there is a Quorum, but no Settling State or Participating Subdivision Member is present, then a matter may pass with a simple majority vote.

EXHIBIT C

Litigating Subdivisions

1. Alabaster City, Alabama
2. Albertville City, Alabama
3. Allred, Hal (Sheriff, Lamar County), Alabama
4. Arab City, Alabama
5. Ashville City, Alabama
6. Athens City, Alabama
7. Atalla City, Alabama
8. Auburn City, Alabama
9. Baldwin County, Alabama
10. Bay Minette City, Alabama
11. Berry Town, Alabama
12. Bessemer City, Alabama
13. Bibb County, Alabama
14. Birmingham City, Alabama
15. Boaz City, Alabama
16. Brewton City, Alabama
17. Bullock County, Alabama
18. Butler Town, Alabama
19. Calera City, Alabama
20. Calhoun County, Alabama
21. Camp Hill Town, Alabama
22. Cedar Bluff Town, Alabama
23. Centre City, Alabama
24. Centreville City, Alabama
25. Cherokee County, Alabama
26. Cherokee Town, Alabama
27. Childersburg City, Alabama
28. Chilton County, Alabama
29. Clanton City, Alabama
30. Coffee County, Alabama
31. Colbert County, Alabama
32. Columbiana City, Alabama
33. Conecuh County, Alabama
34. Cullman City, Alabama
35. Cullman County, Alabama
36. Dadeville City, Alabama
37. Dallas County, Alabama
38. Daphne City, Alabama
39. Decatur City, Alabama
40. Demopolis City, Alabama
41. Dora City, Alabama
42. Double Springs Town, Alabama
43. Douglas Town, Alabama
44. East Brewton City, Alabama
45. Elmore County, Alabama
46. Enterprise City, Alabama
47. Fairhope City, Alabama
48. Fayette City, Alabama
49. Fayette County, Alabama
50. Florence City, Alabama
51. Foley City, Alabama
52. Fort Deposit Town, Alabama
53. Franklin County, Alabama
54. Fultondale City, Alabama
55. Gadsden City, Alabama
56. Gilbertown Town, Alabama
57. Grant Town, Alabama
58. Graysville City, Alabama
59. Gulf Shores City, Alabama
60. Guntersville City, Alabama
61. Haleyville City, Alabama
62. Hartselle City, Alabama
63. Helena City, Alabama
64. Homewood City, Alabama
65. Hoover City, Alabama
66. Hueytown City, Alabama
67. Huntsville City, Alabama
68. Irondale City, Alabama
69. Jackson County, Alabama
70. Jacksonville City, Alabama
71. Jasper City, Alabama
72. Jefferson County, Alabama
73. Lamar County, Alabama
74. Lauderdale County, Alabama
75. Lawrence County, Alabama
76. Leesburg City, Alabama
77. Leighton Town, Alabama
78. Lincoln City, Alabama
79. Loxley Town, Alabama
80. Madison County, Alabama
81. Marengo County, Alabama

82. Marion County, Alabama
83. Marshall County, Alabama
84. Millbrook City, Alabama
85. Mobile City, Alabama
86. Mobile County, Alabama
87. Moody City, Alabama
88. Morgan County, Alabama
89. Moulton City, Alabama
90. Mountain Brook City, Alabama
91. Munford Town, Alabama
92. Northport City, Alabama
93. Oakman Town, Alabama
94. Opelika City, Alabama
95. Opp City, Alabama
96. Orange Beach City, Alabama
97. Ozark City, Alabama
98. Pelham City, Alabama
99. Pettway, Mark (Sheriff Jefferson County), Alabama
100. Phenix City, Alabama
101. Pickens County, Alabama
102. Piedmont City, Alabama
103. Pike County, Alabama
104. Pleasant Grove City, Alabama
105. Prattville City, Alabama
106. Prichard City, Alabama
107. Ragland City, Alabama
108. Rainbow City, Alabama
109. Randolph County, Alabama
110. Red Bay City, Alabama
111. Roanoke City, Alabama
112. Russellville City, Alabama
113. Saraland City, Alabama
114. Semmes City, Alabama
115. Selma City, Alabama
116. Sheffield City, Alabama
117. Slocumb City, Alabama
118. Spanish Fort City, Alabama
119. Springville City, Alabama
120. Sumiton City, Alabama
121. Summerdale Town, Alabama
122. Sylacauga City, Alabama
123. Talladega City, Alabama
124. Talladega County, Alabama
125. Thomasville City, Alabama
126. Troy City, Alabama
127. Trussville City, Alabama
128. Tuscaloosa City, Alabama
129. Tuscaloosa County, Alabama
130. Tuscumbia City (AL)
131. Union Springs City, Alabama
132. Vernon City, Alabama
133. Vestavia Hills City, Alabama
134. Walker County, Alabama
135. West Blocton Town, Alabama
136. Wetumpkia City, Alabama
137. Wilcox County, Alabama
138. Winston County, Alabama
139. Yerby, Byron (Sheriff Fayette County), Alabama
140. Arizona Municipal Risk Retention Pool, Arizona
141. Cochise County, Arizona
142. Kingman City, Arizona
143. Maricopa County, Arizona
144. Mohave County, Arizona
145. Navajo County, Arizona
146. Phoenix City, Arizona
147. Yuma County, Arizona
148. Alameda County, California
149. Amador County, California
150. Anaheim City, California
151. Butte County, California
152. Calaveras County, California
153. Chico City, California
154. Chula Vista City, California
155. Clearlake City, California
156. Costa Mesa City, California
157. Del Norte County, California
158. Dublin City, California
159. El Dorado County, California
160. Encinitas City, California
161. Eureka City, California
162. Fresno County, California
163. Fullerton City, California
164. Humboldt County, California
165. Huntington Beach City, California
166. Imperial County, California
167. Inyo County, California
168. La Habra City, California
169. La Mesa City, California
170. Laguna Beach City, California

171. Lakeport City, California
172. Lassen County, California
173. Los Angeles City, California
174. Los Angeles County, California
175. Madera County, California
176. Marin County, California
177. Mariposa County, California
178. Mendocino County, California
179. Merced County, California
180. Modoc County, California
181. Mono County, California
182. Monterey County, California
183. Murrieta City, California
184. Napa County, California
185. Nevada County, California
186. Oxnard City, California
187. Placentia City, California
188. Placer County, California
189. Plumas County, California
190. Riverside County, California
191. Sacramento City, California
192. Sacramento County, California
193. San Bernardino County, California
194. San Clemente City, California
195. San Diego County, California
196. San Jose City, California
197. San Leandro Unified School District, California
198. San Luis Obispo County, California
199. Santa Ana City, California
200. Santa Clara County, California
201. Santa Cruz County, California
202. Shasta County, California
203. Sonoma County, California
204. Sutter County, California
205. Tehama County, California
206. Trinity County, California
207. Tulare County, California
208. Tuolumne County, California
209. Ventura County, California
210. Westminster City, California
211. Yolo County, California
212. Yuba County, California
213. Adams County, Colorado
214. Arapahoe County, Colorado
215. Aurora City, Colorado
216. Black Hawk City, Colorado
217. Boulder County, Colorado
218. Brighton City, Colorado
219. Broomfield City and County, Colorado
220. Commerce City, Colorado
221. Denver City and County, Colorado
222. Federal Heights City, Colorado
223. Fremont County, Colorado
224. Greeley City, Colorado
225. Hudson Town, Colorado
226. Jefferson County, Colorado
227. Larimer County, Colorado
228. Mesa County, Colorado
229. Northglenn City, Colorado
230. Pueblo County, Colorado
231. Sheridan City, Colorado
232. Teller County, Colorado
233. Thornton City, Colorado
234. Westminster City, Colorado
235. Beacon Falls Town, Connecticut
236. Berlin Town, Connecticut
237. Bethlehem Town, Connecticut
238. Bridgeport City, Connecticut
239. Bristol City, Connecticut
240. Coventry Town, Connecticut
241. East Hartford Town, Connecticut
242. Enfield Town, Connecticut
243. Fairfield Town, Connecticut
244. Middlebury Town, Connecticut
245. Middletown City, Connecticut
246. Milford City, Connecticut
247. Monroe Town, Connecticut
248. Naugatuck Town, Connecticut
249. New Milford Town, Connecticut
250. Newtown Town, Connecticut
251. North Haven Town, Connecticut
252. Norwich City, Connecticut
253. Oxford Town, Connecticut
254. Prospect Town, Connecticut
255. Roxbury Town, Connecticut
256. Seymour Town, Connecticut
257. Shelton City, Connecticut
258. Southbury Town, Connecticut
259. Southington Town, Connecticut
260. Stratford Town, Connecticut

261. Thomaston Town, Connecticut
262. Tolland Town, Connecticut
263. Torrington City, Connecticut
264. Waterbury City, Connecticut
265. West Haven City, Connecticut
266. Wethersfield Town, Connecticut
267. Windham Town, Connecticut
268. Wolcott Town, Connecticut
269. Woodbury Town, Connecticut
270. Dover City, Delaware
271. Kent County, Delaware
272. Seaford City, Delaware
273. Sussex County, Delaware
274. Albany City, Georgia
275. Appling County, Georgia
276. Arlington City, Georgia
277. Athens-Clarke County, Georgia
278. Atlanta City, Georgia
279. Augusta-Richmond County consolidated government, Georgia
280. Bainbridge City, Georgia
281. Banks County, Georgia
282. Bartow County, Georgia
283. Ben Hill County, Georgia
284. Berry, Scott (Sheriff Oconee County), Georgia
285. Blakely City, Georgia
286. Bohannon, Preston (Sheriff Jeff Davis County), Georgia
287. Brantley County, Georgia
288. Bulloch County, Georgia
289. Burke County, Georgia
290. Butts County, Georgia
291. Camden County, Georgia
292. Candler County, Georgia
293. Carroll County, Georgia
294. Carter, John (Sheriff Wayne County), Georgia
295. Cartersville City, Georgia
296. Catoosa County, Georgia
297. Charlton County, Georgia
298. Chattooga County, Georgia
299. Cherokee County, Georgia
300. Clay County, Georgia
301. Clayton County, Georgia
302. Clinch County, Georgia
303. Cobb County, Georgia
304. Columbia County, Georgia
305. Columbus City, Georgia
306. Cook County, Georgia
307. Crisp County, Georgia
308. Dade County, Georgia
309. Damascus City, Georgia
310. Davis, David (Sheriff Bibb County), Georgia
311. Dawson County, Georgia
312. Decatur County, Georgia
313. Deese, Terry (Sheriff Peach County), Georgia
314. Dekalb County, Georgia
315. Dooly County, Georgia
316. Dougherty County, Georgia
317. Early County, Georgia
318. Effingham County, Georgia
319. Elbert County, Georgia
320. Emanuel County, Georgia
321. Evans County, Georgia
322. Fayette County, Georgia
323. Fitzgerald City, Georgia
324. Flood County, Georgia
325. Forsyth County, Georgia
326. Fulton County, Georgia
327. Gainesville City, Georgia
328. Glascock County, Georgia
329. Glynn County, Georgia
330. Greene County, Georgia
331. Gwinnett County, Georgia
332. Habersham County, Georgia
333. Hall County, Georgia
334. Hancock County, Georgia
335. Hancock, H.W. (Sheriff Crisp County), Georgia
336. Henry County, Georgia
337. Houston County, Georgia
338. Irwin County, Georgia
339. Jackson County, Georgia
340. Jasper County, Georgia
341. Jeff Davis County, Georgia
342. Jefferson County, Georgia
343. Johnson County, Georgia
344. Jones County, Georgia

345. Jump, E. Neal (Sheriff Glynn County), Georgia
346. Langford, Gary (Sheriff Murray County), Georgia
347. Laurens County, Georgia
348. Lee County, Georgia
349. Liberty County, Georgia
350. Lincoln County, Georgia
351. Long County, Georgia
352. Lowndes County, Georgia
353. Lumpkin County, Georgia
354. Macon County, Georgia
355. Macon-Bibb County, Georgia
356. Madison County, Georgia
357. Massee, William (Sheriff Baldwin County), Georgia
358. McDuffie County, Georgia
359. McIntosh County, Georgia
360. Melton, Mark (Sheriff Appling County), Georgia
361. Milledgeville City, Georgia
362. Monroe County, Georgia
363. Montgomery County, Georgia
364. Newton County, Georgia
365. Oconee County, Georgia
366. Oglethorpe County, Georgia
367. Peach County, Georgia
368. Pike County, Georgia
369. Polk County, Georgia
370. Pulaski County, Georgia
371. Rabun County, Georgia
372. Randolph County, Georgia
373. Rockdale County, Georgia
374. Rome City, Georgia
375. Sandy Springs City, Georgia
376. Savannah City, Georgia
377. Scarbrough, Gene (Sheriff Tift County), Georgia
378. Screven County, Georgia
379. Seminole County, Georgia
380. Spalding County, Georgia
381. Springfield City, Georgia
382. Stephens County, Georgia
383. Sumter County, Georgia
384. Taliaferro County, Georgia
385. Talton, Cullen (Sheriff Houston County), Georgia
386. Tattnall County, Georgia
387. Tifton City, Georgia
388. Toombs County, Georgia
389. Towns County, Georgia
390. Troup County, Georgia
391. Twiggs County, Georgia
392. Union County, Georgia
393. Walton County, Georgia
394. Warren County, Georgia
395. Washington County, Georgia
396. Wayne County, Georgia
397. Whitfield County, Georgia
398. Wilkes County, Georgia
399. Woodbury City, Georgia
400. Wooten, Doyle (Sheriff Coffee County), Georgia
401. Worth County, Georgia
402. Kaua'i County, Hawai'i
403. Ada County, Idaho
404. Adams County, Idaho
405. Bannock County, Idaho
406. Bingham County, Idaho
407. Blaine County, Idaho
408. Boise City, Idaho
409. Boise County, Idaho
410. Bonneville County, Idaho
411. Camas County, Idaho
412. Canyon County, Idaho
413. Caribou County, Idaho
414. Cassia County, Idaho
415. Chubbuck City, Idaho
416. Elmore County, Idaho
417. Gooding County, Idaho
418. Latah County, Idaho
419. Minidoka County, Idaho
420. Owyhee County, Idaho
421. Payette County, Idaho
422. Pocatello City, Idaho
423. Preston City, Idaho
424. Twin Falls City, Idaho
425. Twin Falls County, Idaho
426. Bond County, Illinois
427. Boone County, Illinois
428. Bureau County, Illinois

429. Calhoun County, Illinois
430. Champaign County, Illinois
431. Chicago City, Illinois
432. Chicago Public School District 299, Illinois
433. Christian County, Illinois
434. Coles County, Illinois
435. Cook County, Illinois
436. Dekalb County, Illinois
437. Dupage County, Illinois
438. East Aurora Public Schools, District 131, Illinois
439. Franklin County, Illinois
440. Harrisburg City, Illinois
441. Henry County, Illinois
442. Herrin City, Illinois
443. Jasper County, Illinois
444. Jefferson County, Illinois
445. Johnson County, Illinois
446. Joliet Public Schools, District 204, Illinois
447. Kane County, Illinois
448. Kankakee County, Illinois
449. Kendall County, Illinois
450. Logan County, Illinois
451. Lawrence County, Illinois
452. Macon County, Illinois
453. Macoupin County, Illinois
454. Marion City, Illinois
455. Marion County, Illinois
456. McHenry County, Illinois
457. Piatt County, Illinois
458. Princeton City, Illinois
459. Putnam County, Illinois
460. Rock Island County, Illinois
461. Rockford City, Illinois
462. Saline County, Illinois
463. Sangamon County, Illinois
464. Schuyler County, Illinois
465. Shelby County, Illinois
466. Stephenson County, Illinois
467. Thornton High Schools, District 205, Illinois
468. Thornton Fractional High Schools, District 215, Illinois
469. Union County, Illinois
470. Wabash County, Illinois
471. West Frankfort City, Illinois
472. White County, Illinois
473. Will County, Illinois
474. Winnebago County, Illinois
475. Alexandria City, Indiana
476. Allen County, Indiana
477. Atlanta Town, Indiana
478. Beech Grove City, Indiana
479. Benton County, Indiana
480. Blackford County, Indiana
481. Bloomington City, Indiana
482. Brownstown Town, Indiana
483. Chandler Town, Indiana
484. Connersville City, Indiana
485. Danville Town, Indiana
486. Delaware County, Indiana
487. Evansville City, Indiana
488. Fishers City, Indiana
489. Fort Wayne City, Indiana
490. Franklin City, Indiana
491. Franklin County, Indiana
492. Gary City, Indiana
493. Greenwood City, Indiana
494. Hammond City, Indiana
495. Harrison County, Indiana
496. Hartford City, Indiana
497. Howard County, Indiana
498. Huntington City, Indiana
499. Indianapolis City, Indiana
500. Jackson County, Indiana
501. Jasper City, Indiana
502. Jay County, Indiana
503. Jeffersonville City, Indiana
504. Jennings County, Indiana
505. Lafayette City, Indiana
506. Lake County, Indiana
507. LaPorte County, Indiana
508. Lawrence City, Indiana
509. Lawrence County, Indiana
510. Logansport City, Indiana
511. Marion County, Indiana
512. Marshall County, Indiana
513. Martinsville City, Indiana
514. Monroe County, Indiana
515. Montpelier City, Indiana

516. Mooresville Town, Indiana
517. Morgan County, Indiana
518. Muncie City, Indiana
519. New Castle City, Indiana
520. Noblesville City, Indiana
521. Pendleton Town, Indiana
522. Peru City, Indiana
523. Plainfield Town, Indiana
524. Porter County, Indiana
525. Portland City, Indiana
526. Pulaski County, Indiana
527. Richmond City, Indiana
528. Ripley County, Indiana
529. Scott County, Indiana
530. Seymour City, Indiana
531. Sheridan Town, Indiana
532. South Bend City, Indiana
533. St. Joseph County, Indiana
534. Starke County, Indiana
535. Terre Haute City, Indiana
536. Tippecanoe County, Indiana
537. Upland Town, Indiana
538. Vanderburgh County, Indiana
539. Vigo County, Indiana
540. West Lafayette City, Indiana
541. Westfield City, Indiana
542. Zionsville Town, Indiana
543. Adair County, Iowa
544. Adams County, Iowa
545. Audubon County, Iowa
546. Allamakee County, Iowa
547. Appanoose County, Iowa
548. Benton County, Iowa
549. Black Hawk County, Iowa
550. Bremer County, Iowa
551. Buchanan County, Iowa
552. Buena Vista County, Iowa
553. Calhoun County, Iowa
554. Carroll County, Iowa
555. Cedar County, Iowa
556. Cerro Gordo County, Iowa
557. Cherokee County, Iowa
558. Chickasaw County, Iowa
559. Clay County, Iowa
560. Clayton County, Iowa
561. Clinton County, Iowa
562. Dallas County, Iowa
563. Delaware County, Iowa
564. Des Moines County, Iowa
565. Emmet County, Iowa
566. Fayette County, Iowa
567. Fremont County, Iowa
568. Hamilton County, Iowa
569. Hancock County, Iowa
570. Hardin County, Iowa
571. Harrison County, Iowa
572. Henry County, Iowa
573. Howard County, Iowa
574. Humboldt County, Iowa
575. Ida County, Iowa
576. Jasper County, Iowa
577. Johnson County, Iowa
578. Jones County, Iowa
579. Keokuk County, Iowa
580. Lee County, Iowa
581. Lyon County, Iowa
582. Madison County, Iowa
583. Mahaska County, Iowa
584. Marion County, Iowa
585. Mills County, Iowa
586. Mitchell County, Iowa
587. Monroe County, Iowa
588. Montgomery County, Iowa
589. Muscatine County, Iowa
590. O'Brien County, Iowa
591. Osceola County, Iowa
592. Plymouth County, Iowa
593. Pocahontas County, Iowa
594. Polk County, Iowa
595. Pottawattamie County, Iowa
596. Poweshiek County, Iowa
597. Sac County, Iowa
598. Scott County, Iowa
599. Shelby County, Iowa
600. Sioux County, Iowa
601. Tama County, Iowa
602. Taylor County, Iowa
603. Union County, Iowa
604. Webster County, Iowa
605. Winnebago County, Iowa
606. Winneshiek County, Iowa
607. Worth County, Iowa

608. Wright County, Iowa
609. Allen County, Kansas
610. Barber County, Kansas
611. Bourbon County, Kansas
612. Cowley County, Kansas
613. Dickinson County, Kansas
614. Elk County, Kansas
615. Elkhardt City, Kansas
616. Finney County, Kansas
617. Grant County, Kansas
618. Greenwood County, Kansas
619. Johnson County, Kansas
620. Kansas City, Kansas
621. Leavenworth County, Kansas
622. Manter City, Kansas
623. Meade County, Kansas
624. Morton County, Kansas
625. Overland Park City, Kansas
626. Reno County, Kansas
627. Sedgwick County, Kansas
628. Seward County, Kansas
629. Stanton County, Kansas
630. Ulysses City, Kansas
631. Wabaunsee County, Kansas
632. Wichita City, Kansas
633. Wyandotte County, Kansas
634. Adair County, Kentucky
635. Bellefont City, Kentucky
636. Benham City, Kentucky
637. Boone County, Kentucky
638. Bourbon County, Kentucky
639. Boyd County, Kentucky
640. Boyle County, Kentucky
641. Breckinridge County, Kentucky
642. Breathitt County Public Schools, Kentucky
643. Buckhorn City, Kentucky
644. Bullitt County Public Schools, Kentucky
645. Clark County, Kentucky
646. Covington City, Kentucky
647. Edmonson County Fiscal Court, Kentucky
648. Estill County, Kentucky
649. Estill County Public Schools, Kentucky
650. Fayette County Public Schools, Kentucky
651. Floyd County, Kentucky
652. Franklin County, Kentucky
653. Green County, Kentucky
654. Greenup City, Kentucky
655. Greenup County, Kentucky
656. Hardin County, Kentucky
657. Harlan City, Kentucky
658. Harlan County, Kentucky
659. Harrison County Public Schools, Kentucky
660. Hart County Public Schools, Kentucky
661. Henderson City, Kentucky
662. Henderson County, Kentucky
663. Henry County, Kentucky
664. Hopkins County, Kentucky
665. Hyden City, Kentucky
666. Jefferson County Public Schools, Kentucky
667. Jenkins City, Kentucky
668. Jessamine County, Kentucky
669. Johnson County Public Schools, Kentucky
670. Kenton County, Kentucky
671. Knott County, Kentucky
672. Larue County Public Schools, Kentucky
673. Lawrence County, Kentucky
674. Lawrence County Public Schools, Kentucky
675. Lee County, Kentucky
676. Lexington-Fayette Urban County, Kentucky
677. London City, Kentucky
678. Louisville-Jefferson County, Kentucky
679. Loyall City, Kentucky
680. Lynch City, Kentucky
681. Madison County, Kentucky
682. Manchester City, Kentucky
683. Marshall County, Kentucky
684. Martin County Public Schools, Kentucky
685. McCracken County, Kentucky

686. Meade County, Kentucky
687. Menifee County Public Schools, Kentucky
688. Montgomery County, Kentucky
689. Morehead City, Kentucky
690. Ohio County, Kentucky
691. Oldham County, Kentucky
692. Owsley County, Kentucky
693. Owsley County Public Schools, Kentucky
694. Paducah City, Kentucky
695. Pendleton County, Kentucky
696. Perry County, Kentucky
697. Pike County, Kentucky
698. Pineville City, Kentucky
699. Pippa Passes City, Kentucky
700. Pulaski County, Kentucky
701. Russell City, Kentucky
702. Scott County, Kentucky
703. Shelby County, Kentucky
704. South Shore City, Kentucky
705. Vanceburg City, Kentucky
706. Warren County, Kentucky
707. Whitesburg City, Kentucky
708. Woodford County, Kentucky
709. Wolfe County Public Schools, Kentucky
710. Worthington City, Kentucky
711. Acadia-St. Landry Hospital Service District d/b/a Acadia-St. Landry Hospital, Louisiana
712. Ackal, Louis (Sheriff Iberia Parish), Louisiana
713. Alexandria City, Louisiana
714. Anderson, Douglas (Sheriff Avoyelles Parish), Louisiana
715. Anslum, Scott (Sheriff St. Mary Parish), Louisiana
716. Ascension Parish, Louisiana
717. Ascension Parish School Board, Louisiana
718. Assumption Parish Police Jury, Louisiana
719. Avoyelles Parish Police Jury, Louisiana
720. Baldwin Town, Louisiana
721. Bastrop City, Louisiana
722. Baton Rouge City, Louisiana
723. Beauregard Parish Police Jury, Louisiana
724. Benton Fire District 4, Louisiana
725. Berwick Town, Louisiana
726. Bogalusa City, Louisiana
727. Bossier City, Louisiana
728. Bossier Parish, Louisiana
729. Caddo Fire District 1, Louisiana
730. Caddo Parish, Louisiana
731. Calcasieu Parish Policy Jury, Louisiana
732. Caldwell Parish, Louisiana
733. Cameron Parish, Louisiana
734. Catahoula Parish Police Jury, Louisiana
735. Champagne, Greg (Sheriff St. Charles Parish), Louisiana
736. Claiborne Parish, Louisiana
737. Concordia Parish, Louisiana
738. Craft, John (Sheriff Vernon Parish), Louisiana
739. Delhi Town, Louisiana
740. Desoto Fire District 8, Louisiana
741. Donaldsonville City, Louisiana
742. East Carroll Parish Police Jury, Louisiana
743. Edwards, Toney (Sheriff Catahoula Parish), Louisiana
744. Eunice City, Louisiana
745. Evangeline Parish Police Jury, Louisiana
746. Falcon, Leland (Sheriff Assumption Parish), Louisiana
747. Ferriday Town, Louisiana
748. Franklin City, Louisiana
749. Franklin Parish, Louisiana
750. Garber, Mark (Sheriff Lafayette Parish), Louisiana
751. Gautreaux, Sid (Sheriff East Baton Rouge Parish), Louisiana
752. Gilley, Gary (Sheriff Richland Parish), Louisiana
753. Gramercy Town, Louisiana
754. Grant Parish, Louisiana

755. Guidroz, Bobby (Sheriff St. Landry Parish), Louisiana
756. Gusman, Marlin (Sheriff Orleans Parish), Louisiana
757. Hospital Service District No. 1 of the Parish of Avoyelles, State of Louisiana d/b/a Bunkie General Hospital, Louisiana
758. Hospital Service District No. 1 of the Parish of Lasalle, State of Louisiana d/b/a Hardtner Medical Center, Louisiana
759. Hebert, Douglas (Sheriff Allen Parish), Louisiana
760. Hedrick, Kenneth (Sheriff Concordia Parish), Louisiana
761. Hilton, William (Sheriff Rapides Parish), Louisiana
762. Iberia Parish, Louisiana
763. Iberia Parish School Board, Louisiana
764. Jackson Parish Police Jury, Louisiana
765. Jefferson Davis Parish Police Jury, Louisiana
766. Jefferson Parish, Louisiana
767. Jefferson Parish Hospital Service District 1, Louisiana
768. Jefferson Parish Hospital Service District 2, Louisiana
769. Jones, Rickey (Sheriff Tensas Parish), Louisiana
770. Kenner City, Louisiana
771. Lafourche Parish, Louisiana
772. LaFourche Parish School Board, Louisiana
773. Lake Charles City, Louisiana
774. Lake Providence Town, Louisiana
775. LaSalle Parish, Louisiana
776. Lopinto, Joseph (Sheriff Jefferson Parish), Louisiana
777. Lutcher Town, Louisiana
778. Madisonville Town, Louisiana
779. Mancuso, Tony (Sheriff Calcasieu Parish), Louisiana
780. Mandeville City, Louisiana
781. McCain, Steven (Sheriff Grant Parish), Louisiana
782. Monroe City, Louisiana
783. Morehouse Parish Police Jury, Louisiana
784. Natchitoches Parish Council, Louisiana
785. New Iberia City, Louisiana
786. North Caddo Hospital Service District d/b/a North Caddo Medical Center, Louisiana
787. Opelousas City, Louisiana
788. Opelousas General Hospital Authority, A Louisiana Public Trust, d/b/a Opelousas General Health System, Louisiana
789. Ouachita Parish Police Jury, Louisiana
790. Patterson City, Louisiana
791. Pearl River Town, Louisiana
792. Philley, Jerry (Sheriff West Carroll Parish), Louisiana
793. Pineville City, Louisiana
794. Rapides Parish Police Jury, Louisiana
795. Red River Fire District, Louisiana
796. Red River Parish, Louisiana
797. Richardson, Ronald (Sheriff Sabine Parish), Louisiana
798. Richland Parish, Louisiana
799. Richwood Town, Louisiana
800. Russel, Jay (Sheriff Ouachita Parish), Louisiana
801. Sabine Parish Police Jury, Louisiana
802. Saint Martinville City, Louisiana
803. Seal, Randy (Sheriff Washington Parish), Louisiana
804. Shreveport City, Louisiana
805. Slidell City, Louisiana
806. Smith, Randy (Sheriff St. Tammany Parish), Louisiana
807. Soileau, Edrick (Sheriff, Evangeline Parish), Louisiana
808. St. Bernard Parish School Board, Louisiana
809. St. Charles Parish, Louisiana

810. St. James Parish, Louisiana
811. St. James Parish School Board, Louisiana
812. St. John the Baptist Parish, Louisiana
813. St. Landry Parish, Louisiana
814. St. Martin Parish, Louisiana
815. St. Mary Parish, Louisiana
816. St. Mary Parish School Board, Louisiana
817. St. Tammany Fire District 1, Louisiana
818. St. Tammany Fire District 12, Louisiana
819. St. Tammany Fire District 13, Louisiana
820. St. Tammany Fire District 2, Louisiana
821. St. Tammany Fire District 3, Louisiana
822. St. Tammany Fire District 4, Louisiana
823. St. Tammany Fire District 5, Louisiana
824. St. Tammany Parish, Louisiana
825. St. Tammany Parish Coroner, Louisiana
826. Tubbs, Michael (Sheriff Morehouse Parish), Louisiana
827. Union Parish, Louisiana
828. Vermilion Parish Police Jury, Louisiana
829. Vernon Parish Police Jury, Louisiana
830. Washington Parish, Louisiana
831. Webster Parish, Louisiana
832. West Ascension Parish Hospital Service District d/b/a Prevost Memorial Hospital, Louisiana
833. West Baton Rouge Fire District 1, Louisiana
834. West Baton Rouge Parish, Louisiana
835. West Carroll Parish Policy Jury, Louisiana
836. West Monroe City, Louisiana
837. Wiley, Jeffrey (Sheriff, Ascension Parish), Louisiana
838. Williams, Wydette (Sheriff East Carroll Parish), Louisiana
839. Winn Parish, Louisiana
840. Woods, Ivy (Sheriff Jefferson Davis Parish), Louisiana
841. Androscoggin County, Maine
842. Aroostook County, Maine
843. Auburn City, Maine
844. Augusta City, Maine
845. Bangor City, Maine
846. Bangor School Department, Maine
847. Biddeford City, Maine
848. Calais City, Maine
849. Cape Elizabeth School District, Maine
850. Cumberland County, Maine
851. Ellsworth School Department, Maine
852. Kennebec County, Maine
853. Knox County, Maine
854. Lewiston City, Maine
855. Lincoln County, Maine
856. Maine Regional School Unit 10, Maine
857. Maine Regional School Unit 13, Maine
858. Maine Regional School Unit 25, Maine
859. Maine Regional School Unit 26, Maine
860. Maine Regional School Unit 29, Maine
861. Maine Regional School Unit 34, Maine
862. Maine Regional School Unit 40, Maine
863. Maine Regional School Unit 50, Maine
864. Maine Regional School Unit 57, Maine
865. Maine Regional School Unit 60, Maine
866. Maine Regional School Unit 71, Maine
867. Maine Regional School Unit 9, Maine

868. Maine School Administrative District 11, Maine
869. Maine School Administrative District 15, Maine
870. Maine School Administrative District 28/Five Town Central School District, Maine
871. Maine School Administrative District 35, Maine
872. Maine School Administrative District 44, Maine
873. Maine School Administrative District 53, Maine
874. Maine School Administrative District 55, Maine
875. Maine School Administrative District 6, Maine
876. Maine School Administrative District 61, Maine
877. Maine School Administrative District 72, Maine
878. Penobscot County, Maine
879. Portland City, Maine
880. Portland School District, Maine
881. Rockland City, Maine
882. Saco City, Maine
883. Sagadahoc County, Maine
884. Sanford City, Maine
885. Scarborough School District, Maine
886. Somerset County, Maine
887. South Portland School Department, Maine
888. St. George Municipal School District, Maine
889. Waldo County, Maine
890. Washington County, Maine
891. Waterville City, Maine
892. Waterville School District, Maine
893. York County, Maine
894. Aberdeen City, Maryland
895. Allegany County, Maryland
896. Baltimore City, Maryland
897. Baltimore Public School District, Maryland
898. Bel Air City, Maryland
899. Berlin City, Maryland
900. Bowie City, Maryland
901. Calvert County, Maryland
902. Cambridge City, Maryland
903. Caroline County, Maryland
904. Carroll County, Maryland
905. Charles County, Maryland
906. Charlestown City, Maryland
907. Cottage City Town, Maryland
908. Cumberland City, Maryland
909. Dorchester County, Maryland
910. Forest Heights Town, Maryland
911. Frederick City, Maryland
912. Frederick County, Maryland
913. Frostburg City, Maryland
914. Garrett County, Maryland
915. Grantsville City, Maryland
916. Hagerstown City, Maryland
917. Harford County, Maryland
918. Havre de Grace City, Maryland
919. Howard County, Maryland
920. Laurel City, Maryland
921. Montgomery County, Maryland
922. Mountain Lake Park City, Maryland
923. North Brentwood Town, Maryland
924. North East City, Maryland
925. Oakland City, Maryland
926. Perryville City, Maryland
927. Prince George’s County, Maryland
928. Seat Pleasant City, Maryland
929. Somerset County, Maryland
930. St. Mary’s County, Maryland
931. Talbot County, Maryland
932. Upper Marlboro Town, Maryland
933. Vienna City, Maryland
934. Washington County, Maryland
935. Wicomico County, Maryland
936. Acushnet Town, Massachusetts
937. Agawam Town, Massachusetts
938. Amesbury City, Massachusetts
939. Aquinnah Town, Massachusetts
940. Athol Town, Massachusetts
941. Auburn Town, Massachusetts
942. Ayer Town, Massachusetts
943. Barnstable Town, Massachusetts
944. Belchertown Town, Massachusetts
945. Beverly City, Massachusetts

946. Billerica Town, Massachusetts
947. Braintree Town, Massachusetts
948. Brewster Town, Massachusetts
949. Bridgewater Town, Massachusetts
950. Brockton City, Massachusetts
951. Brookline Town, Massachusetts
952. Cambridge City, Massachusetts
953. Canton Town, Massachusetts
954. Carver Town, Massachusetts
955. Charlton Town, Massachusetts
956. Chelmsford Town, Massachusetts
957. Chelsea City, Massachusetts
958. Chicopee City, Massachusetts
959. Clarksburg Town, Massachusetts
960. Clinton Town, Massachusetts
961. Danvers Town, Massachusetts
962. Dedham Town, Massachusetts
963. Dennis Town, Massachusetts
964. Douglas Town, Massachusetts
965. Dudley Town, Massachusetts
966. East Bridgewater Town, Massachusetts
967. Eastham Town, Massachusetts
968. Easthampton City, Massachusetts
969. Easton Town, Massachusetts
970. Everett City, Massachusetts
971. Fairhaven Town, Massachusetts
972. Fall River City, Massachusetts
973. Falmouth Town, Massachusetts
974. Fitchburg City, Massachusetts
975. Framingham City, Massachusetts
976. Freetown Town, Massachusetts
977. Georgetown Town, Massachusetts
978. Gloucester City, Massachusetts
979. Grafton Town, Massachusetts
980. Greenfield City, Massachusetts
981. Hanson Town, Massachusetts
982. Haverhill City, Massachusetts
983. Holliston Town, Massachusetts
984. Holyoke City, Massachusetts
985. Hopedale Town, Massachusetts
986. Hull Town, Massachusetts
987. Kingston Town, Massachusetts
988. Lakeville Town, Massachusetts
989. Leicester Town, Massachusetts
990. Leominster City, Massachusetts
991. Leverett Town, Massachusetts
992. Longmeadow Town, Massachusetts
993. Lowell City, Massachusetts
994. Ludlow Town, Massachusetts
995. Lunenberg Town, Massachusetts
996. Lynn City, Massachusetts
997. Lynnfield Town, Massachusetts
998. Malden City, Massachusetts
999. Marblehead Town, Massachusetts
1000. Marshfield Town, Massachusetts
1001. Mashpee Town, Massachusetts
1002. Mattapoisett Town, Massachusetts
1003. Medford City, Massachusetts
1004. Melrose City, Massachusetts
1005. Methuen City, Massachusetts
1006. Middleborough Town, Massachusetts
1007. Milford Town, Massachusetts
1008. Millbury Town, Massachusetts
1009. Millis Town, Massachusetts
1010. Natick Town, Massachusetts
1011. New Bedford City, Massachusetts
1012. Newburyport City, Massachusetts
1013. North Adams City, Massachusetts
1014. North Andover Town, Massachusetts
1015. North Attleborough Town, Massachusetts
1016. North Reading Town, Massachusetts
1017. Northampton City, Massachusetts
1018. Northbridge Town, Massachusetts
1019. Norton Town, Massachusetts
1020. Norwell Town, Massachusetts
1021. Norwood Town, Massachusetts
1022. Orange Town, Massachusetts
1023. Oxford Town, Massachusetts
1024. Palmer Town, Massachusetts
1025. Peabody City, Massachusetts
1026. Pembroke Town, Massachusetts
1027. Pittsfield City, Massachusetts
1028. Plainville Town, Massachusetts
1029. Plymouth Town, Massachusetts
1030. Provincetown Town, Massachusetts
1031. Quincy City, Massachusetts
1032. Randolph Town, Massachusetts
1033. Rehoboth Town, Massachusetts
1034. Revere City, Massachusetts

1035. Rockland Town, Massachusetts
1036. Salem City, Massachusetts
1037. Salisbury Town, Massachusetts
1038. Sandwich Town, Massachusetts
1039. Scituate Town, Massachusetts
1040. Seekonk Town, Massachusetts
1041. Sheffield Town, Massachusetts
1042. Shirley Town, Massachusetts
1043. Somerset Town, Massachusetts
1044. Somerville City, Massachusetts
1045. South Hadley Town, Massachusetts
1046. Southbridge Town, Massachusetts
1047. Spencer Town, Massachusetts
1048. Springfield City, Massachusetts
1049. Stoneham Town, Massachusetts
1050. Stoughton Town, Massachusetts
1051. Sturbridge Town, Massachusetts
1052. Sudbury Town, Massachusetts
1053. Sutton Town, Massachusetts
1054. Swampscott Town, Massachusetts
1055. Templeton Town, Massachusetts
1056. Tewksbury Town, Massachusetts
1057. Truro Town, Massachusetts
1058. Tyngsborough Town, Massachusetts
1059. Upton Town, Massachusetts
1060. Wakefield Town, Massachusetts
1061. Walpole Town, Massachusetts
1062. Ware Town, Massachusetts
1063. Warren Town, Massachusetts
1064. Watertown Town, Massachusetts
1065. Wellfleet Town, Massachusetts
1066. West Boylston Town, Massachusetts
1067. West Bridgewater Town, Massachusetts
1068. West Springfield Town, Massachusetts
1069. Westborough Town, Massachusetts
1070. Westford Town, Massachusetts
1071. Weymouth Town, Massachusetts
1072. Williamsburg Town, Massachusetts
1073. Wilmington Town, Massachusetts
1074. Winchendon Town, Massachusetts
1075. Winthrop Town, Massachusetts
1076. Woburn City, Massachusetts
1077. Worcester City, Massachusetts
1078. Alcona County, Michigan
1079. Alger County, Michigan
1080. Alpena County, Michigan
1081. Antrim County, Michigan
1082. Arenac County, Michigan
1083. Baraga County, Michigan
1084. Benzie County, Michigan
1085. Berrien County, Michigan
1086. Branch County, Michigan
1087. Calhoun County, Michigan
1088. Canton Charter Township, Michigan
1089. Cass County, Michigan
1090. Charlevoix County, Michigan
1091. Chippewa County, Michigan
1092. Clinton Charter Township, Michigan
1093. Clinton County, New York
1094. Crawford County, Michigan
1095. Delta County, Michigan
1096. Detroit City, Michigan
1097. Dickinson County, Michigan
1098. East Lansing City, Michigan
1099. Eaton County, Michigan
1100. Escanaba City, Michigan
1101. Genesee County, Michigan
1102. Grand Rapids City, Michigan
1103. Grand Traverse County, Michigan
1104. Gratiot County, Michigan
1105. Hillsdale County, Michigan
1106. Houghton County, Michigan
1107. Huron Charter Township, Michigan
1108. Ingham County, Michigan
1109. Ionia County, Michigan
1110. Iosco County, Michigan
1111. Iron County, Michigan
1112. Iron Mountain City, Michigan
1113. Isabella County, Michigan
1114. Jackson City, Michigan
1115. Kalamazoo County, Michigan
1116. Kent County, Michigan
1117. Lake County, Michigan
1118. Lansing City, Michigan
1119. Leelanau County, Michigan
1120. Lenawee County, Michigan
1121. Livingston County, Michigan
1122. Livonia City, Michigan
1123. Luce County, Michigan
1124. Macomb County, Michigan

1125. Manistee County, Michigan
1126. Marquette County, Michigan
1127. Mason County, Michigan
1128. Monroe County, Michigan
1129. Montcalm County, Michigan
1130. Montmorency County, Michigan
1131. Muskegon County, Michigan
1132. Newaygo County, Michigan
1133. Northville Charter Township, Michigan
1134. Oakland County, Michigan
1135. Oceana County, Michigan
1136. Ogemaw County, Michigan
1137. Ontonagon County, Michigan
1138. Osceola County, Michigan
1139. Otsego County, Michigan
1140. Pittsfield Charter Township, Michigan
1141. Pontiac City, Michigan
1142. Presque Isle County, Michigan
1143. Romulus City, Michigan
1144. Roscommon County, Michigan
1145. Saginaw County, Michigan
1146. Sanilac County, Michigan
1147. Sault Ste. Marie City, Michigan
1148. Shiawassee County, Michigan
1149. St. Clair County, Michigan
1150. Traverse City, Michigan
1151. Tuscola County, Michigan
1152. Van Buren Charter Township, Michigan
1153. Washtenaw County, Michigan
1154. Wayne City, Michigan
1155. Wayne County, Michigan
1156. Westland City, Michigan
1157. Wexford County, Michigan
1158. Anoka County, Minnesota
1159. Big Stone County, Minnesota
1160. Coon Rapids City, Minnesota
1161. Duluth City, Minnesota
1162. Minnetonka Public School District No. 276, Minnesota
1163. North St. Paul City, Minnesota
1164. Pine County, Minnesota
1165. Proctor City, Minnesota
1166. Rochester City, Minnesota
1167. Saint Paul City, Minnesota
1168. Yellow Medicine County, Minnesota
1169. Adams County, Mississippi
1170. Amite County, Mississippi
1171. Arcola Town, Mississippi
1172. Bolivar County, Mississippi
1173. Centreville Town, Mississippi
1174. Clarksdale City, Mississippi
1175. Covington County, Mississippi
1176. DeSoto County, Mississippi
1177. Forrest County, Mississippi
1178. Greenwood City, Mississippi
1179. Grenada City, Mississippi
1180. Grenada County, Mississippi
1181. Gulfport City, Mississippi
1182. Harrison County, Mississippi
1183. Hattiesburg City, Mississippi
1184. Hinds County, Mississippi
1185. Holly Springs City, Mississippi
1186. Indianola City, Mississippi
1187. Issaquena County, Mississippi
1188. Jackson City, Mississippi
1189. Jonestown City, Mississippi
1190. Laurel City, Mississippi
1191. Leflore County, Mississippi
1192. Long Beach City, Mississippi
1193. Lumberton City, Mississippi
1194. Madison County, Mississippi
1195. Meridian City, Mississippi
1196. Mound Bayou City, Mississippi
1197. Pascagoula City, Mississippi
1198. Pearl River County, Mississippi
1199. Prentiss County, Mississippi
1200. Scott County, Mississippi
1201. Stone County, Mississippi
1202. Summit Town, Mississippi
1203. Tippah County, Mississippi
1204. Washington County, Mississippi
1205. Audrain County, Missouri
1206. Barton County, Missouri
1207. Boone County, Missouri
1208. Buchanan County, Missouri
1209. Callaway County, Missouri
1210. Camden County, Missouri
1211. Cass County, Missouri
1212. Chariton County, Missouri

1213. Cole County, Missouri
1214. Douglas County, Missouri
1215. Franklin County, Missouri
1216. Gasconade County, Missouri
1217. Harrisonville City, Missouri
1218. Howell County, Missouri
1219. Jackson County, Missouri
1220. Jefferson County, Missouri
1221. Johnson County, Missouri
1222. Kansas City, Missouri
1223. Knox County, Missouri
1224. Lewis County, Missouri
1225. Lincoln County, Missouri
1226. Maries County, Missouri
1227. Miller County, Missouri
1228. Moniteau County, Missouri
1229. Montgomery County, Missouri
1230. Morgan County, Missouri
1231. Osage County, Missouri
1232. Ozark County, Missouri
1233. Pemiscot County, Missouri
1234. Pettis County, Missouri
1235. Phelps County, Missouri
1236. Pulaski County, Missouri
1237. Randolph County, Missouri
1238. Reynolds County, Missouri
1239. Ripley County, Missouri
1240. Saint Joseph City, Missouri
1241. Schuyler County, Missouri
1242. Sedalia City, Missouri
1243. Shannon County, Missouri
1244. Shelby County, Missouri
1245. Springfield City, Missouri
1246. St. Charles County, Missouri
1247. St. Francois County, Missouri
1248. St. Louis County, Missouri
1249. Warren County, Missouri
1250. Webster County, Missouri
1251. Wright County, Missouri
1252. Anaconda-Deer Lodge County, Montana
1253. Cascade County, Montana
1254. Gallatin County, Montana
1255. Great Falls City, Montana
1256. Lake County, Montana
1257. Missoula City, Montana
1258. Douglas County, Nebraska
1259. Knox County, Nebraska
1260. Lincoln County, Nebraska
1261. Sarpy County, Nebraska
1262. Boulder City, Nevada
1263. Carson City, Nevada
1264. Churchill County, Nevada
1265. Clark County, Nevada
1266. Henderson City, Nevada
1267. Las Vegas City, Nevada
1268. Mesquite City, Nevada
1269. North Las Vegas City, Nevada
1270. Nye County, Nevada
1271. Sparks City, Nevada
1272. Washoe County, Nevada
1273. West Wendover City, Nevada
1274. Belknap County, New Hampshire
1275. Belmont City, New Hampshire
1276. Berlin City, New Hampshire
1277. Carroll County, New Hampshire
1278. Cheshire County, New Hampshire
1279. Claremont City, New Hampshire
1280. Concord City, New Hampshire
1281. Coos County, New Hampshire
1282. Derry Town, New Hampshire
1283. Franklin City, New Hampshire
1284. Grafton County, New Hampshire
1285. Goshen School District, New Hampshire
1286. Hillsborough County, New Hampshire
1287. Keene City, New Hampshire
1288. Kearsarge Regional School District-School Administrative Unit 65, New Hampshire
1289. Laconia City, New Hampshire
1290. Lebanon School District, New Hampshire
1291. Londonderry Town, New Hampshire
1292. Manchester City, New Hampshire
1293. Nashua City, New Hampshire
1294. Pittsfield School District, New Hampshire
1295. Rockingham County, New Hampshire
1296. Strafford County, New Hampshire

1297. Sullivan County, New Hampshire
1298. Tamworth School District, New Hampshire
1299. Atlantic County, New Jersey
1300. Barnegat Township, New Jersey
1301. Bayonne City, New Jersey
1302. Bergen County, New Jersey
1303. Burlington County, New Jersey
1304. Camden County, New Jersey
1305. Clifton City, New Jersey
1306. Clinton Town, New Jersey
1307. Elizabeth City, New Jersey
1308. Essex County, New Jersey
1309. Hudson County, New Jersey
1310. Hunterdon County, New Jersey
1311. Jersey City, New Jersey
1312. Ocean County, New Jersey
1313. Paramus Borough, New Jersey
1314. Passaic County, New Jersey
1315. Paterson City, New Jersey
1316. Ridgefield Borough, New Jersey
1317. Saddle Brook Township, New Jersey
1318. Sussex County, New Jersey
1319. Trenton City, New Jersey
1320. Vineland City, New Jersey
1321. Albany City, New York
1322. Albany County, New York
1323. Allegany County, New York
1324. Amityville Village, New York
1325. Amsterdam City, New York
1326. Auburn City, New York
1327. Babylon Town, New York
1328. Babylon Village, New York
1329. Bellmore Fire District, New York
1330. Bellport Village, New York
1331. Branch Village, New York
1332. Brookhaven Town, New York
1333. Broome County, New York
1334. Buffalo City, New York
1335. Centereach Fire District, New York
1336. Clarkstown Town, New York
1337. Clinton County, Michigan
1338. Columbia County, New York
1339. Cortland County, New York
1340. Dutchess County, New York
1341. East Hampton Village, New York
1342. East Rockaway Village, New York
1343. Erie County, New York
1344. Farmingdale Village, New York
1345. Floral Park Village, New York
1346. Franklin County, New York
1347. Friendship Fire & Hose Co., New York
1348. Fulton County, New York
1349. Garden City Village, New York
1350. Genesee County, New York
1351. Geneva City, New York
1352. Great Neck Village, New York
1353. Greene County, New York
1354. Greenport Village, New York
1355. Hamilton County, New York
1356. Hauppauge Fire District, New York
1357. Haverstraw Town, New York
1358. Hempstead Town, New York
1359. Hempstead Village, New York
1360. Herkimer County, New York
1361. Herkimer Village, New York
1362. Hicksville Water District, New York
1363. Huntington Town, New York
1364. Island Park Village, New York
1365. Islandia Village, New York
1366. Islip Terrance Fire District, New York
1367. Islip Town, New York
1368. Ithaca City, New York
1369. Jefferson County, New York
1370. Kingston City, New York
1371. Lackawanna City, New York
1372. Lake Grove Village, New York
1373. Lawrence Village, New York
1374. Levittown Fire District, New York
1375. Lewis County, New York
1376. Lindenhurst Village, New York
1377. Lloyd Harbor Village, New York
1378. Long Beach City, New York
1379. Lynbrook Village, New York
1380. Massapequa Park Village, New York
1381. Melville Fire District, New York
1382. Merrick Library, New York
1383. Mill Neck Village, New York
1384. Miller Place Fire District, New York
1385. Monroe County, New York

1386. Montgomery County, New York
1387. Mount Sinai Fire District, New York
1388. Nesconset Fire District, New York
1389. New Hyde Park Village, New York
1390. New York City, New York
1391. Niagara County, New York
1392. Nissequogue Village, New York
1393. North Hempstead Town, New York
1394. North Merrick Fire District, New York
1395. North Patchogue Fire District, New York
1396. Northport Village, New York
1397. Ogdensburg City, New York
1398. Old Westbury Village, New York
1399. Oneida County, New York
1400. Onondaga County, New York
1401. Ontario County, New York
1402. Orange County, New York
1403. Orangetown Town, New York
1404. Oswego County, New York
1405. Oyster Bay Town, New York
1406. Patchogue Village, New York
1407. Plattsburgh City, New York
1408. Poquott Village, New York
1409. Port Washington North Village, New York
1410. Port Washington Water District, New York
1411. Poughkeepsie City, New York
1412. Poughkeepsie Town, New York
1413. Ramapo Town, New York
1414. Rensselaer County, New York
1415. Ridge Fire District, New York
1416. Riverhead Town, New York
1417. Rochester City, New York
1418. Rochester Public School District, New York
1419. Rockland County, New York
1420. Rockville Centre Public Library, New York
1421. Rome City, New York
1422. Roslyn Water District, New York
1423. Saltaire Village, New York
1424. Saratoga County, New York
1425. Saratoga Springs City, New York
1426. Schenectady City, New York
1427. Schenectady County, New York
1428. Schoharie County, New York
1429. Schuyler County, New York
1430. Seneca County, New York
1431. Smithtown Fire District, New York
1432. Smithtown Town, New York
1433. South Farmingdale Fire District, New York
1434. Southampton Town, New York
1435. Southold Town, New York
1436. Southwestern Central School District, New York
1437. St. James Fire District, New York
1438. St. Lawrence County, New York
1439. Steuben County, New York
1440. Stewart Manor Village, New York
1441. Stony Brook Fire District, New York
1442. Stony Point Town, New York
1443. Suffern Village, New York
1444. Sullivan County, New York
1445. Syracuse City, New York
1446. Tompkins County, New York
1447. Troy City, New York
1448. Ulster County, New York
1449. Utica City, New York
1450. Valley Stream Village, New York
1451. Washington County, New York
1452. West Hampton Dunes, New York
1453. West Haverstraw Village, New York
1454. West Hempstead Public Library, New York
1455. Westbury Village, New York
1456. Westchester County, New York
1457. Wyoming County, New York
1458. Yonkers City, New York
1459. Alamance County, North Carolina
1460. Anson County, North Carolina
1461. Ashe County, North Carolina
1462. Beaufort County, North Carolina
1463. Bladen County, North Carolina
1464. Brunswick County, North Carolina
1465. Buncombe County, North Carolina
1466. Burke County, North Carolina
1467. Cabarrus County, North Carolina
1468. Caldwell County, North Carolina

1469. Camden County, North Carolina
1470. Canton City, North Carolina
1471. Carteret County, North Carolina
1472. Catawba County, North Carolina
1473. Chatham County, North Carolina
1474. Cleveland County, North Carolina
1475. Columbus County, North Carolina
1476. Craven County, North Carolina
1477. Cumberland County, North Carolina
1478. Dare County, North Carolina
1479. Davidson County, North Carolina
1480. Davie County, North Carolina
1481. Duplin County, North Carolina
1482. Durham County, North Carolina
1483. Fayetteville City, North Carolina
1484. Forsyth County, North Carolina
1485. Franklin County, North Carolina
1486. Gaston County, North Carolina
1487. Granville County, North Carolina
1488. Greensboro City, North Carolina
1489. Guilford County, North Carolina
1490. Halifax County, North Carolina
1491. Haywood County, North Carolina
1492. Henderson City, North Carolina
1493. Hickory City, North Carolina
1494. Iredell County, North Carolina
1495. Jacksonville City, North Carolina
1496. Lee County, North Carolina
1497. Lincoln County, North Carolina
1498. Madison County, North Carolina
1499. Martin County, North Carolina
1500. McDowell County, North Carolina
1501. Mecklenburg County, North Carolina
1502. Mitchell County, North Carolina
1503. Moore County, North Carolina
1504. New Hanover County, North Carolina
1505. Onslow County, North Carolina
1506. Orange County, North Carolina
1507. Pamlico County, North Carolina
1508. Pasquotank County, North Carolina
1509. Person County, North Carolina
1510. Pitt County, North Carolina
1511. Polk County, North Carolina
1512. Randolph County, North Carolina
1513. Richmond County, North Carolina
1514. Robeson County, North Carolina
1515. Rockingham County, North Carolina
1516. Rowan County, North Carolina
1517. Rutherford County, North Carolina
1518. Sampson County, North Carolina
1519. Scotland County, North Carolina
1520. Stokes County, North Carolina
1521. Surry County, North Carolina
1522. Vance County, North Carolina
1523. Watauga County, North Carolina
1524. Wayne County, North Carolina
1525. Wilkes County, North Carolina
1526. Wilmington City, North Carolina
1527. Winston-Salem City, North Carolina
1528. Yadkin County, North Carolina
1529. Yancey County, North Carolina
1530. Barnes County, North Dakota
1531. Benson County, North Dakota
1532. Bismarck City, North Dakota
1533. Burleigh County, North Dakota
1534. Devils Lake City, North Dakota
1535. Dickey County, North Dakota
1536. Dunn County, North Dakota
1537. Eddy County, North Dakota
1538. Foster County, North Dakota
1539. Grand Forks County, North Dakota
1540. Lamoure County, North Dakota
1541. Lisbon City, North Dakota
1542. McKenzie County, North Dakota
1543. McLean County, North Dakota
1544. Mercer County, North Dakota
1545. Mountrail County, North Dakota
1546. Pembina County, North Dakota
1547. Pierce County, North Dakota
1548. Ramsey County, North Dakota
1549. Ransom County, North Dakota
1550. Richland County, North Dakota
1551. Rolette County, North Dakota
1552. Sargent County, North Dakota
1553. Stark County, North Dakota
1554. Towner County, North Dakota
1555. Walsh County, North Dakota
1556. Ward County, North Dakota
1557. Wells County, North Dakota
1558. Williams County, North Dakota

1559. Akron City, Ohio
1560. Ashland City, Ohio
1561. Ashland County, Ohio
1562. Ashtabula County, Ohio
1563. Athens County, Ohio
1564. Auglaize County, Ohio
1565. Barberton City, Ohio
1566. Belmont County, Ohio
1567. Boardman Local Schools BOE, Ohio
1568. Boston Heights Village, Ohio
1569. Boston Township, Ohio
1570. Broadview Heights City, Ohio
1571. Brooklyn Heights Village, Ohio
1572. Brown County, Ohio
1573. Butler County, Ohio
1574. Champaign County, Ohio
1575. Cincinnati City, Ohio
1576. Clermont County, Ohio
1577. Cleveland City, Ohio
1578. Clinton County, Ohio
1579. Clinton Village, Ohio
1580. Copley Township, Ohio
1581. Coshocton County, Ohio
1582. Coventry Township, Ohio
1583. Crawford County, Ohio
1584. Cuyahoga County, Ohio
1585. Cuyahoga Falls City, Ohio
1586. Darke County, Ohio
1587. Dayton City, Ohio
1588. Delaware County, Ohio
1589. East Cleveland City, Ohio
1590. Elyria City, Ohio
1591. Erie County, Ohio
1592. Euclid City, Ohio
1593. Fairfield City, Ohio
1594. Fairfield County, Ohio
1595. Fairlawn City, Ohio
1596. Fayette County, Ohio
1597. Findlay City, Ohio
1598. Franklin County, Ohio
1599. Fulton County, Ohio
1600. Gallia County, Ohio
1601. Garfield Heights City, Ohio
1602. Geauga County, Ohio
1603. Green City, Ohio
1604. Guernsey County, Ohio
1605. Hamilton City, Ohio
1606. Hamilton County, Ohio
1607. Hocking County, Ohio
1608. Huron City, Ohio
1609. Huron County, Ohio
1610. Ironton City, Ohio
1611. Jackson County, Ohio
1612. Jefferson County, Ohio
1613. Knox County, Ohio
1614. Lake County, Ohio
1615. Lakemore Village, Ohio
1616. Lakewood City, Ohio
1617. Lawrence County, Ohio
1618. Lebanon City, Ohio
1619. Lexington Village, Ohio
1620. Liberty Local Schools, Ohio
1621. Licking County, Ohio
1622. Logan County, Ohio
1623. Lorain City, Ohio
1624. Lorain County, Ohio
1625. Lucas County, Ohio
1626. Lyndhurst City, Ohio
1627. Macedonia City, Ohio
1628. Marion County, Ohio
1629. Mayfield Heights City, Ohio
1630. Meigs County, Ohio
1631. Mercer County, Ohio
1632. Middletown City, Ohio
1633. Mogadore Village, Ohio
1634. Montgomery County, Ohio
1635. Munroe Falls City, Ohio
1636. Muskingum County, Ohio
1637. New Franklin City, Ohio
1638. Newburgh Heights Village, Ohio
1639. Noble County, Ohio
1640. North Olmsted City, Ohio
1641. North Ridgeville City, Ohio
1642. North Royalton City, Ohio
1643. Norton City, Ohio
1644. Olmsted Falls City, Ohio
1645. Painesville Township, Ohio
1646. Parma City, Ohio
1647. Parma Heights City, Ohio
1648. Peninsula Village, Ohio
1649. Perry County, Ohio
1650. Portage County, Ohio

1651. Portsmouth City, Ohio
1652. Richfield Village, Ohio
1653. Richland County Children's Services, Ohio
1654. Ross County, Ohio
1655. Sandusky County, Ohio
1656. Scioto County, Ohio
1657. Seneca County, Ohio
1658. Seven Hills City, Ohio
1659. Shelby County, Ohio
1660. Silver Lake Village, Ohio
1661. Springfield Township, Summit County, Ohio
1662. St. Mary's City, Ohio
1663. Stark County, Ohio
1664. Stow City, Ohio
1665. Strongsville City, Ohio
1666. Summit County, Ohio
1667. Tallmadge City, Ohio
1668. Toledo City, Ohio
1669. Trumbull County, Ohio
1670. Tuscarawas County, Ohio
1671. Valley Fire District, Ohio
1672. Van Wert City, Ohio
1673. Van Wert County, Ohio
1674. Warren City, Ohio
1675. Warrensville Heights, Ohio
1676. Washington County, Ohio
1677. Wayne County, Ohio
1678. Wickliffe City, Ohio
1679. Williams County, Ohio
1680. Altus City, Oklahoma
1681. Atoka County, Oklahoma
1682. Beckham County, Oklahoma
1683. Caddo County, Oklahoma
1684. Choctaw County, Oklahoma
1685. Cimarron County, Oklahoma
1686. Cleveland County, Oklahoma
1687. Coal County, Oklahoma
1688. Collinsville City, Oklahoma
1689. Comanche County, Oklahoma
1690. Craig County, Oklahoma
1691. Creek County, Oklahoma
1692. Custer County, Oklahoma
1693. Delaware County, Oklahoma
1694. Dewey County, Oklahoma
1695. El Reno City, Oklahoma
1696. Elk City, Oklahoma
1697. Enid City, Oklahoma
1698. Garvin County, Oklahoma
1699. Grady County, Oklahoma
1700. Greer County, Oklahoma
1701. Harper County, Oklahoma
1702. Haskell County, Oklahoma
1703. Hughes County, Oklahoma
1704. Jackson County, Oklahoma
1705. Jefferson County, Oklahoma
1706. Jenks City, Oklahoma
1707. Johnston County, Oklahoma
1708. Kay County, Oklahoma
1709. Kiowa County, Oklahoma
1710. Latimer County, Oklahoma
1711. LeFlore County, Oklahoma
1712. Lincoln County, Oklahoma
1713. Logan County, Oklahoma
1714. Love County, Oklahoma
1715. Major County, Oklahoma
1716. Mayes County, Oklahoma
1717. McClain County, Oklahoma
1718. McCurtain County, Oklahoma
1719. Midwest City, Oklahoma
1720. Noble County, Oklahoma
1721. Nowata County, Oklahoma
1722. Okfuskee County, Oklahoma
1723. Oklahoma County, Oklahoma
1724. Okmulgee County, Oklahoma
1725. Osage County, Oklahoma
1726. Ottawa County, Oklahoma
1727. Pawnee County, Oklahoma
1728. Payne County, Oklahoma
1729. Pittsburg County, Oklahoma
1730. Pottawatomie County, Oklahoma
1731. Rogers County, Oklahoma
1732. Seminole County, Oklahoma
1733. Shawnee City, Oklahoma
1734. Stephens County, Oklahoma
1735. Stillwater City, Oklahoma
1736. Texas County, Oklahoma
1737. Tillman County, Oklahoma
1738. Tulsa City, Oklahoma
1739. Tulsa County, Oklahoma
1740. Washington County, Oklahoma

1741. Woods County, Oklahoma
1742. Woodward County, Oklahoma
1743. Yukon City, Oklahoma
1744. Coos County, Oregon
1745. Portland City, Oregon
1746. Adams County, Pennsylvania
1747. Allegheny County, Pennsylvania
1748. Armstrong County, Pennsylvania
1749. Bedford County, Pennsylvania
1750. Bensalem Township, Pennsylvania
1751. Bradford County, Pennsylvania
1752. Bristol Township, Pennsylvania
1753. Bucks County, Pennsylvania
1754. Cambria County, Pennsylvania
1755. Carbon County, Pennsylvania
1756. Chardo, District Attorney of Dauphin County, Pennsylvania
1757. Clarion County, Pennsylvania
1758. Clearfield County, Pennsylvania
1759. Clinton County, Pennsylvania
1760. Coatesville City, Pennsylvania
1761. Columbia County, Pennsylvania
1762. Delaware County, Pennsylvania
1763. Edwardsville Borough, Pennsylvania
1764. Erie County, Pennsylvania
1765. Exeter Borough, Pennsylvania
1766. Fairview Township, Luzerne County, Pennsylvania
1767. Fayette County, Pennsylvania
1768. Forty Fort Borough, Pennsylvania
1769. Franklin County, Pennsylvania
1770. Greene County, Pennsylvania
1771. Hanover Township, Luzerne County, Pennsylvania
1772. Hazleton City, Pennsylvania
1773. Hirz, District Attorney of Erie County, Pennsylvania
1774. Houck, District Attorney of Northampton County, Pennsylvania
1775. Indiana County, Pennsylvania
1776. Kingston Borough, Pennsylvania
1777. Lackawanna County, Pennsylvania
1778. Lawrence County, Pennsylvania
1779. Lehigh County, Pennsylvania
1780. Lock Haven City, Pennsylvania
1781. Lower Makefield Township, Pennsylvania
1782. Luzerne County, Pennsylvania
1783. Lycoming County, Pennsylvania
1784. Mercer County, Pennsylvania
1785. Middletown Township, Bucks County, Pennsylvania
1786. Morrisville Borough, Pennsylvania
1787. Nanticoke City, Pennsylvania
1788. Newtown Township, Bucks County, Pennsylvania
1789. Norristown Municipality, Pennsylvania
1790. Northampton County, Pennsylvania
1791. Northumberland County, Pennsylvania
1792. Philadelphia City, Pennsylvania
1793. Pike County, Pennsylvania
1794. Pittsburgh City, Pennsylvania
1795. Plains Township, Pennsylvania
1796. Ryan, District Attorney of Chester County, Pennsylvania
1797. Schuylkill County, Pennsylvania
1798. Sugar Notch Borough, Pennsylvania
1799. Tioga County, Pennsylvania
1800. Warminster Township, Pennsylvania
1801. Warrington Township, Pennsylvania
1802. Washington County, Pennsylvania
1803. Weintraub, District Attorney of Bucks County, Pennsylvania
1804. West Norriton Township, Pennsylvania
1805. West Pittston, Pennsylvania
1806. Westmoreland County, Pennsylvania
1807. Wilkes-Barre City, Pennsylvania
1808. Wilkes-Barre Township, Pennsylvania
1809. Wright Township, Pennsylvania
1810. Wyoming Borough, Pennsylvania
1811. Wyoming County, Pennsylvania
1812. Zappala, District Attorney of Allegheny County, Pennsylvania
1813. Ziccarelli, District Attorney of Westmoreland County, Pennsylvania
1814. Aibonito Municipality, Puerto Rico
1815. Aguada Municipality, Puerto Rico

1816. Aguadilla Municipality, Puerto Rico
1817. Anasco Municipality, Puerto Rico
1818. Arecibo Municipality, Puerto Rico
1819. Barranquitas Municipality, Puerto Rico
1820. Cabo Rojo Municipality, Puerto Rico
1821. Camuy Municipality, Puerto Rico
1822. Canovanas Municipality, Puerto Rico
1823. Comerio Municipality, Puerto Rico
1824. Dorado Municipality, Puerto Rico
1825. Fajardo Municipality, Puerto Rico
1826. Guanica Municipality, Puerto Rico
1827. Guayanilla Municipality, Puerto Rico
1828. Hatillo Municipality, Puerto Rico
1829. Isabela Municipality, Puerto Rico
1830. Jayuya Municipality, Puerto Rico
1831. Juana Diaz Municipality, Puerto Rico
1832. Juncos Municipality, Puerto Rico
1833. Lares Municipality, Puerto Rico
1834. Las Marias Municipality, Puerto Rico
1835. Loiza Municipality, Puerto Rico
1836. Manati Municipality, Puerto Rico
1837. Maricao Municipality, Puerto Rico
1838. Moca Municipality, Puerto Rico
1839. Morovis Municipality, Puerto Rico
1840. Orocovis Municipality, Puerto Rico
1841. Penuelas Municipality, Puerto Rico
1842. Ponce Municipality, Puerto Rico
1843. Quebradillas Municipality, Puerto Rico
1844. Rincon Municipality, Puerto Rico
1845. Rio Grande Municipality, Puerto Rico
1846. Sabana Grande Municipality, Puerto Rico
1847. Salinas Municipality, Puerto Rico
1848. San German Municipality, Puerto Rico
1849. San Juan Municipality, Puerto Rico
1850. San Lorenzo Municipality, Puerto Rico
1851. Santa Isabel Municipality, Puerto Rico
1852. Toa Alta Municipality, Puerto Rico
1853. Trujillo Alto Municipality, Puerto Rico
1854. Vega Alta Municipality, Puerto Rico
1855. Vega Baja Municipality, Puerto Rico
1856. Yabucoa Municipality, Puerto Rico
1857. Barrington Town, Rhode Island
1858. Bristol Town, Rhode Island
1859. Burrillville Town, Rhode Island
1860. Central Falls City, Rhode Island
1861. Charlestown Town, Rhode Island
1862. Coventry Town, Rhode Island
1863. Cranston City, Rhode Island
1864. Cumberland Town, Rhode Island
1865. East Greenwich Town, Rhode Island
1866. East Providence City, Rhode Island
1867. Foster Town, Rhode Island
1868. Glocester Town, Rhode Island
1869. Hopkinton Town, Rhode Island
1870. Jamestown Town, Rhode Island
1871. Johnston Town, Rhode Island
1872. Middletown Town, Rhode Island
1873. Narragansett Town, Rhode Island
1874. Newport City, Rhode Island
1875. North Kingstown Town, Rhode Island
1876. North Providence Town, Rhode Island
1877. Pawtucket City, Rhode Island
1878. Portsmouth Town, Rhode Island
1879. Richmond Town, Rhode Island
1880. Scituate Town, Rhode Island
1881. Smithfield Town, Rhode Island
1882. South Kingstown Town, Rhode Island
1883. Warren Town, Rhode Island
1884. Warwick City, Rhode Island
1885. West Greenwich Town, Rhode Island
1886. West Warwick Town, Rhode Island
1887. Westerly Town, Rhode Island
1888. Woonsocket City, Rhode Island
1889. Abbeville County, South Carolina
1890. Aiken County, South Carolina

1891. Allendale County, South Carolina
1892. Anderson County, South Carolina
1893. Bamberg County, South Carolina
1894. Barnwell County, South Carolina
1895. Beaufort County, South Carolina
1896. Berkeley County, South Carolina
1897. Calhoun County, South Carolina
1898. Charleston City, South Carolina
1899. Charleston County, South Carolina
1900. Cherokee County, South Carolina
1901. Chester City, South Carolina
1902. Chester County, South Carolina
1903. Chesterfield County, South Carolina
1904. Clarendon County, South Carolina
1905. Colleton County, South Carolina
1906. Dillon County, South Carolina
1907. Dorchester County, South Carolina
1908. Edgefield County, South Carolina
1909. Fairfield County, South Carolina
1910. Florence County, South Carolina
1911. Georgetown City, South Carolina
1912. Georgetown County, South Carolina
1913. Greenville County, South Carolina
1914. Greenwood County, South Carolina
1915. Hampton County, South Carolina
1916. Horry County, South Carolina
1917. Jasper County, South Carolina
1918. Kershaw County, South Carolina
1919. Lancaster County, South Carolina
1920. Laurens County, South Carolina
1921. Lee County, South Carolina
1922. Lexington County, South Carolina
1923. Marion County, South Carolina
1924. Marlboro County, South Carolina
1925. McCormick County, South Carolina
1926. Mt. Pleasant Town, South Carolina
1927. Myrtle Beach City, South Carolina
1928. Newberry County, South Carolina
1929. North Charleston City, South Carolina
1930. Oconee County, South Carolina
1931. Orangeburg City, South Carolina
1932. Orangeburg County, South Carolina
1933. Pickens County, South Carolina
1934. Richland County, South Carolina
1935. Saluda County, South Carolina
1936. Spartanburg County, South Carolina
1937. Summerville Town, South Carolina
1938. Sumter County, South Carolina
1939. Union County, South Carolina
1940. Williamsburg County, South Carolina
1941. York County, South Carolina
1942. Anderson County, Tennessee
1943. Arlington Town, Tennessee
1944. Bledsoe County, Tennessee
1945. Blount County, Tennessee
1946. Bradley County, Tennessee
1947. Campbell County, Tennessee
1948. Claiborne County, Tennessee
1949. Clay County, Tennessee
1950. Cocke County, Tennessee
1951. Franklin County, Tennessee
1952. Gatlinburg City, Tennessee
1953. Grainger County, Tennessee
1954. Greene County, Tennessee
1955. Grundy County, Tennessee
1956. Hamblen County Board of Education, Tennessee
1957. Hamilton County, Tennessee
1958. Hancock County Board of Education, Tennessee
1959. Hawkins County, Tennessee
1960. Jefferson County, Tennessee
1961. Knox County, Tennessee
1962. Knoxville City, Tennessee
1963. Loudon County, Tennessee
1964. Madison County, Tennessee
1965. Marion County, Tennessee
1966. McMinn County, Tennessee
1967. Meigs County, Tennessee
1968. Memphis City, Tennessee
1969. Millington City, Tennessee
1970. Monroe County, Tennessee
1971. Polk County, Tennessee
1972. Rhea County, Tennessee
1973. Roane County, Tennessee
1974. Rutherford County, Tennessee
1975. Rutledge Town, Tennessee
1976. Sequatchie County, Tennessee
1977. Sevier County, Tennessee
1978. Shelby County, Tennessee

1979. Union County, Tennessee
1980. Washington County, Tennessee
1981. Williamson County, Tennessee
1982. Angelina County, Texas
1983. Bailey County, Texas
1984. Bexar County, Texas
1985. Bowie County, Texas
1986. Brazos County, Texas
1987. Camp County, Texas
1988. Cherokee County, Texas
1989. Clay County, Texas
1990. Coryell County, Texas
1991. Dallas County, Texas
1992. Dallas County Hospital District d/b/a Parkland Health Hospital System, Texas
1993. Duval County, Texas
1994. Eagle Pass City, Texas
1995. El Campo Memorial Hospital/West Wharton County Hospital District, Texas
1996. Ellis County, Texas
1997. Freestone County, Texas
1998. Guadalupe Valley Hospital a/k/a Guadalupe Regional Medical Center, Texas
1999. Harris County Hospital District d/b/a Harris Health System, Texas
2000. Henderson County, Texas
2001. Jim Hogg County, Texas
2002. Jim Wells County, Texas
2003. Johnson County, Texas
2004. Kaufman County, Texas
2005. Kleberg County, Texas
2006. Lamar County, Texas
2007. Laredo City, Texas
2008. Maverick County, Texas
2009. McLennan County, Texas
2010. Montgomery County, Texas
2011. Ochiltree County Hospital District, Texas
2012. Palo Pinto County Hospital District a/k/a Palo Pinto General Hospital, Texas
2013. Polk County, Texas
2014. Rockwall County, Texas
2015. Rusk County, Texas
2016. San Antonio City, Texas
2017. Smith County, Texas
2018. Stephens County, Texas
2019. Tarrant County, Texas
2020. Tarrant County Hospital District d/b/a JPS Health, Texas
2021. Titus County, Texas
2022. Walker County, Texas
2023. Webb County, Texas
2024. Wichita County, Texas
2025. Williamson County, Texas
2026. Zavala County, Texas
2027. Cache County, Utah
2028. Sevier County, Utah
2029. Summit County, Utah
2030. Tooele County, Utah
2031. Uintah County, Utah
2032. Utah County, Utah
2033. Wasatch County, Utah
2034. Washington County, Utah
2035. Weber County, Utah
2036. Bennington Town, Vermont
2037. St. Albans City, Vermont
2038. Accomack County, Virginia
2039. Alexandria City, Virginia
2040. Alleghany County, Virginia
2041. Amherst County, Virginia
2042. Arlington County, Virginia
2043. Botetourt County, Virginia
2044. Bristol City, Virginia
2045. Buchanan County, Virginia
2046. Buena Vista City, Virginia
2047. Carroll County, Virginia
2048. Charlotte County, Virginia
2049. Chesapeake City, Virginia
2050. Chesterfield County, Virginia
2051. Covington City, Virginia
2052. Culpeper County, Virginia
2053. Cumberland County, Virginia
2054. Danville City, Virginia
2055. Dickenson County, Virginia
2056. Dinwiddie County, Virginia
2057. Emporia City, Virginia
2058. Fairfax City, Virginia
2059. Fairfax County, Virginia

2060. Fauquier County, Virginia
2061. Floyd County, Virginia
2062. Franklin County, Virginia
2063. Frederick County, Virginia
2064. Fredericksburg City, Virginia
2065. Galax City, Virginia
2066. Giles County, Virginia
2067. Goochland County, Virginia
2068. Greensville County, Virginia
2069. Halifax County, Virginia
2070. Henrico County, Virginia
2071. Henry County, Virginia
2072. Hopewell City, Virginia
2073. Isle of Wight County, Virginia
2074. King & Queen County, Virginia
2075. Lee County, Virginia
2076. Lexington City, Virginia
2077. Loudoun County, Virginia
2078. Louisa County, Virginia
2079. Madison County, Virginia
2080. Martinsville City, Virginia
2081. Mecklenburg County, Virginia
2082. Montgomery County, Virginia
2083. Norfolk City, Virginia
2084. Northampton County, Virginia
2085. Northumberland County, Virginia
2086. Norton City, Virginia
2087. Page County, Virginia
2088. Patrick County, Virginia
2089. Pittsylvania County, Virginia
2090. Portsmouth City, Virginia
2091. Prince George County, Virginia
2092. Prince William County, Virginia
2093. Pulaski County, Virginia
2094. Radford City, Virginia
2095. Richmond City, Virginia
2096. Richmond County, Virginia
2097. Roanoke City, Virginia
2098. Roanoke County, Virginia
2099. Rockbridge County, Virginia
2100. Salem City, Virginia
2101. Scott County, Virginia
2102. Shenandoah County, Virginia
2103. Smyth County, Virginia
2104. Stafford County, Virginia
2105. Tazewell County, Virginia
2106. Virginia Beach City, Virginia
2107. Warren County, Virginia
2108. Washington County, Virginia
2109. Waynesboro City, Virginia
2110. Westmoreland County, Virginia
2111. Winchester City, Virginia
2112. Wise County, Virginia
2113. Wythe County, Virginia
2114. Bainbridge Island City, Washington
2115. Chelan County, Washington
2116. Franklin County, Washington
2117. Island County, Washington
2118. Jefferson County, Washington
2119. King County, Washington
2120. Kitsap County, Washington
2121. Lewis County, Washington
2122. Pierce County, Washington
2123. Spokane City, Washington
2124. Spokane County, Washington
2125. Tacoma City, Washington
2126. Thurston County, Washington
2127. Walla Walla County, Washington
2128. Whatcom County, Washington
2129. Adams County, Wisconsin
2130. Ashland County, Wisconsin
2131. Barron County, Wisconsin
2132. Bayfield County, Wisconsin
2133. Brown County, Wisconsin
2134. Buffalo County, Wisconsin
2135. Burnett County, Wisconsin
2136. Calumet County, Wisconsin
2137. Chippewa County, Wisconsin
2138. Clark County, Wisconsin
2139. Columbia County, Wisconsin
2140. Crawford County, Wisconsin
2141. Cudahy City, Wisconsin
2142. Dane County, Wisconsin
2143. Dodge County, Wisconsin
2144. Door County, Wisconsin
2145. Douglas County, Wisconsin
2146. Dunn County, Wisconsin
2147. Eau Claire County, Wisconsin
2148. Florence County, Wisconsin
2149. Fond du Lac County, Wisconsin
2150. Forest County, Wisconsin
2151. Franklin City, Wisconsin

2152. Grant County, Wisconsin
2153. Green County, Wisconsin
2154. Green Lake County, Wisconsin
2155. Greenfield City, Wisconsin
2156. Iowa County, Wisconsin
2157. Iron County, Wisconsin
2158. Jackson County, Wisconsin
2159. Jefferson County, Wisconsin
2160. Juneau County, Wisconsin
2161. Kenosha City, Wisconsin
2162. Kenosha County, Wisconsin
2163. Kewaunee County, Wisconsin
2164. La Crosse County, Wisconsin
2165. Lafayette County, Wisconsin
2166. Langlade County, Wisconsin
2167. Lincoln County, Wisconsin
2168. Manitowoc County, Wisconsin
2169. Marathon County, Wisconsin
2170. Marinette City, Wisconsin
2171. Marinette County, Wisconsin
2172. Marquette County, Wisconsin
2173. Menominee County, Wisconsin
2174. Milwaukee City, Wisconsin
2175. Milwaukee County, Wisconsin
2176. Monroe County, Wisconsin
2177. Oak Creek City, Wisconsin
2178. Oconto County, Wisconsin
2179. Oneida County, Wisconsin
2180. Outagamie County, Wisconsin
2181. Ozaukee County, Wisconsin
2182. Pepin County, Wisconsin
2183. Pierce County, Wisconsin
2184. Pleasant Prairie Village, Wisconsin
2185. Portage County, Wisconsin
2186. Price County, Wisconsin
2187. Racine County, Wisconsin
2188. Richland County, Wisconsin
2189. Rock County, Wisconsin
2190. Rusk County, Wisconsin
2191. Sauk County, Wisconsin
2192. Sawyer County, Wisconsin
2193. Shawano County, Wisconsin
2194. Sheboygan County, Wisconsin
2195. South Milwaukee City, Wisconsin
2196. St. Croix County, Wisconsin
2197. Superior City, Wisconsin
2198. Taylor County, Wisconsin
2199. Trempealeau County, Wisconsin
2200. Vernon County, Wisconsin
2201. Vilas County, Wisconsin
2202. Walworth County, Wisconsin
2203. Washburn County, Wisconsin
2204. Washington County, Wisconsin
2205. Waukesha County, Wisconsin
2206. Waupaca County, Wisconsin
2207. Waushara County, Wisconsin
2208. West Allis City, Wisconsin
2209. Winnebago County, Wisconsin
2210. Wood County, Wisconsin
2211. Sheridan City, Wyoming

EXHIBIT D

[Intentionally Omitted]

EXHIBIT E

List of Opioid Remediation Uses

Schedule A
Core Strategies

Settling States and Participating Subdivisions listed on Exhibit G may choose from among the abatement strategies listed in Schedule B. However, priority may be given to the following core abatement strategies ("*Core Strategies*").[1]

A. NALOXONE OR OTHER FDA-APPROVED DRUG TO REVERSE OPIOID OVERDOSES

1. Expand training for first responders, schools, community support groups and families; and

2. Increase distribution to individuals who are uninsured or whose insurance does not cover the needed service.

B. MEDICATION-ASSISTED TREATMENT ("*MAT*") DISTRIBUTION AND OTHER OPIOID-RELATED TREATMENT

1. Increase distribution of MAT to individuals who are uninsured or whose insurance does not cover the needed service;

2. Provide education to school-based and youth-focused programs that discourage or prevent misuse;

3. Provide MAT education and awareness training to healthcare providers, EMTs, law enforcement, and other first responders; and

4. Provide treatment and recovery support services such as residential and inpatient treatment, intensive outpatient treatment, outpatient therapy or counseling, and recovery housing that allow or integrate medication and with other support services.

[1] As used in this Schedule A, words like "expand," "fund," "provide" or the like shall not indicate a preference for new or existing programs.

C. PREGNANT & POSTPARTUM WOMEN

1. Expand Screening, Brief Intervention, and Referral to Treatment ("*SBIRT*") services to non-Medicaid eligible or uninsured pregnant women;

2. Expand comprehensive evidence-based treatment and recovery services, including MAT, for women with co-occurring Opioid Use Disorder ("*OUD*") and other Substance Use Disorder ("*SUD*")/Mental Health disorders for uninsured individuals for up to 12 months postpartum; and

3. Provide comprehensive wrap-around services to individuals with OUD, including housing, transportation, job placement/training, and childcare.

D. EXPANDING TREATMENT FOR NEONATAL ABSTINENCE SYNDROME ("*NAS*")

1. Expand comprehensive evidence-based and recovery support for NAS babies;

2. Expand services for better continuum of care with infant-need dyad; and

3. Expand long-term treatment and services for medical monitoring of NAS babies and their families.

E. EXPANSION OF WARM HAND-OFF PROGRAMS AND RECOVERY SERVICES

1. Expand services such as navigators and on-call teams to begin MAT in hospital emergency departments;

2. Expand warm hand-off services to transition to recovery services;

3. Broaden scope of recovery services to include co-occurring SUD or mental health conditions;

4. Provide comprehensive wrap-around services to individuals in recovery, including housing, transportation, job placement/training, and childcare; and

5. Hire additional social workers or other behavioral health workers to facilitate expansions above.

F. TREATMENT FOR INCARCERATED POPULATION

1. Provide evidence-based treatment and recovery support, including MAT for persons with OUD and co-occurring SUD/MH disorders within and transitioning out of the criminal justice system; and

2. Increase funding for jails to provide treatment to inmates with OUD.

G. PREVENTION PROGRAMS

1. Funding for media campaigns to prevent opioid use (similar to the FDA's "Real Cost" campaign to prevent youth from misusing tobacco);

2. Funding for evidence-based prevention programs in schools;

3. Funding for medical provider education and outreach regarding best prescribing practices for opioids consistent with the CDC guidelines, including providers at hospitals (academic detailing);

4. Funding for community drug disposal programs; and

5. Funding and training for first responders to participate in pre-arrest diversion programs, post-overdose response teams, or similar strategies that connect at-risk individuals to behavioral health services and supports.

H. EXPANDING SYRINGE SERVICE PROGRAMS

1. Provide comprehensive syringe services programs with more wrap-around services, including linkage to OUD treatment, access to sterile syringes and linkage to care and treatment of infectious diseases.

I. EVIDENCE-BASED DATA COLLECTION AND RESEARCH ANALYZING THE EFFECTIVENESS OF THE ABATEMENT STRATEGIES WITHIN THE STATE

Schedule B
Approved Uses

Support treatment of Opioid Use Disorder (OUD) and any co-occurring Substance Use Disorder or Mental Health (SUD/MH) conditions through evidence-based or evidence-informed programs or strategies that may include, but are not limited to, the following:

PART ONE: TREATMENT

A. TREAT OPIOID USE DISORDER (OUD)

Support treatment of Opioid Use Disorder ("*OUD*") and any co-occurring Substance Use Disorder or Mental Health ("*SUD/MH*") conditions through evidence-based or evidence-informed programs or strategies that may include, but are not limited to, those that:[2]

1. Expand availability of treatment for OUD and any co-occurring SUD/MH conditions, including all forms of Medication-Assisted Treatment ("*MAT*") approved by the U.S. Food and Drug Administration.

2. Support and reimburse evidence-based services that adhere to the American Society of Addiction Medicine ("*ASAM*") continuum of care for OUD and any co-occurring SUD/MH conditions.

3. Expand telehealth to increase access to treatment for OUD and any co-occurring SUD/MH conditions, including MAT, as well as counseling, psychiatric support, and other treatment and recovery support services.

4. Improve oversight of Opioid Treatment Programs ("*OTPs*") to assure evidence-based or evidence-informed practices such as adequate methadone dosing and low threshold approaches to treatment.

5. Support mobile intervention, treatment, and recovery services, offered by qualified professionals and service providers, such as peer recovery coaches, for persons with OUD and any co-occurring SUD/MH conditions and for persons who have experienced an opioid overdose.

6. Provide treatment of trauma for individuals with OUD (*e.g.*, violence, sexual assault, human trafficking, or adverse childhood experiences) and family members (*e.g.*, surviving family members after an overdose or overdose fatality), and training of health care personnel to identify and address such trauma.

[2] As used in this Schedule B, words like "expand," "fund," "provide" or the like shall not indicate a preference for new or existing programs.

7. Support evidence-based withdrawal management services for people with OUD and any co-occurring mental health conditions.

8. Provide training on MAT for health care providers, first responders, students, or other supporting professionals, such as peer recovery coaches or recovery outreach specialists, including telementoring to assist community-based providers in rural or underserved areas.

9. Support workforce development for addiction professionals who work with persons with OUD and any co-occurring SUD/MH conditions.

10. Offer fellowships for addiction medicine specialists for direct patient care, instructors, and clinical research for treatments.

11. Offer scholarships and supports for behavioral health practitioners or workers involved in addressing OUD and any co-occurring SUD/MH or mental health conditions, including, but not limited to, training, scholarships, fellowships, loan repayment programs, or other incentives for providers to work in rural or underserved areas.

12. Provide funding and training for clinicians to obtain a waiver under the federal Drug Addiction Treatment Act of 2000 ("*DATA 2000*") to prescribe MAT for OUD, and provide technical assistance and professional support to clinicians who have obtained a DATA 2000 waiver.

13. Disseminate web-based training curricula, such as the American Academy of Addiction Psychiatry's Provider Clinical Support Service–Opioids web-based training curriculum and motivational interviewing.

14. Develop and disseminate new curricula, such as the American Academy of Addiction Psychiatry's Provider Clinical Support Service for Medication–Assisted Treatment.

B. SUPPORT PEOPLE IN TREATMENT AND RECOVERY

Support people in recovery from OUD and any co-occurring SUD/MH conditions through evidence-based or evidence-informed programs or strategies that may include, but are not limited to, the programs or strategies that:

1. Provide comprehensive wrap-around services to individuals with OUD and any co-occurring SUD/MH conditions, including housing, transportation, education, job placement, job training, or childcare.

2. Provide the full continuum of care of treatment and recovery services for OUD and any co-occurring SUD/MH conditions, including supportive housing, peer support

services and counseling, community navigators, case management, and connections to community-based services.

3. Provide counseling, peer-support, recovery case management and residential treatment with access to medications for those who need it to persons with OUD and any co-occurring SUD/MH conditions.

4. Provide access to housing for people with OUD and any co-occurring SUD/MH conditions, including supportive housing, recovery housing, housing assistance programs, training for housing providers, or recovery housing programs that allow or integrate FDA-approved mediation with other support services.

5. Provide community support services, including social and legal services, to assist in deinstitutionalizing persons with OUD and any co-occurring SUD/MH conditions.

6. Support or expand peer-recovery centers, which may include support groups, social events, computer access, or other services for persons with OUD and any co-occurring SUD/MH conditions.

7. Provide or support transportation to treatment or recovery programs or services for persons with OUD and any co-occurring SUD/MH conditions.

8. Provide employment training or educational services for persons in treatment for or recovery from OUD and any co-occurring SUD/MH conditions.

9. Identify successful recovery programs such as physician, pilot, and college recovery programs, and provide support and technical assistance to increase the number and capacity of high-quality programs to help those in recovery.

10. Engage non-profits, faith-based communities, and community coalitions to support people in treatment and recovery and to support family members in their efforts to support the person with OUD in the family.

11. Provide training and development of procedures for government staff to appropriately interact and provide social and other services to individuals with or in recovery from OUD, including reducing stigma.

12. Support stigma reduction efforts regarding treatment and support for persons with OUD, including reducing the stigma on effective treatment.

13. Create or support culturally appropriate services and programs for persons with OUD and any co-occurring SUD/MH conditions, including new Americans.

14. Create and/or support recovery high schools.

15. Hire or train behavioral health workers to provide or expand any of the services or supports listed above.

C. CONNECT PEOPLE WHO NEED HELP TO THE HELP THEY NEED (CONNECTIONS TO CARE)

Provide connections to care for people who have—or are at risk of developing—OUD and any co-occurring SUD/MH conditions through evidence-based or evidence-informed programs or strategies that may include, but are not limited to, those that:

1. Ensure that health care providers are screening for OUD and other risk factors and know how to appropriately counsel and treat (or refer if necessary) a patient for OUD treatment.

2. Fund SBIRT programs to reduce the transition from use to disorders, including SBIRT services to pregnant women who are uninsured or not eligible for Medicaid.

3. Provide training and long-term implementation of SBIRT in key systems (health, schools, colleges, criminal justice, and probation), with a focus on youth and young adults when transition from misuse to opioid disorder is common.

4. Purchase automated versions of SBIRT and support ongoing costs of the technology.

5. Expand services such as navigators and on-call teams to begin MAT in hospital emergency departments.

6. Provide training for emergency room personnel treating opioid overdose patients on post-discharge planning, including community referrals for MAT, recovery case management or support services.

7. Support hospital programs that transition persons with OUD and any co-occurring SUD/MH conditions, or persons who have experienced an opioid overdose, into clinically appropriate follow-up care through a bridge clinic or similar approach.

8. Support crisis stabilization centers that serve as an alternative to hospital emergency departments for persons with OUD and any co-occurring SUD/MH conditions or persons that have experienced an opioid overdose.

9. Support the work of Emergency Medical Systems, including peer support specialists, to connect individuals to treatment or other appropriate services following an opioid overdose or other opioid-related adverse event.

10. Provide funding for peer support specialists or recovery coaches in emergency departments, detox facilities, recovery centers, recovery housing, or similar settings; offer services, supports, or connections to care to persons with OUD and any co-

occurring SUD/MH conditions or to persons who have experienced an opioid overdose.

11. Expand warm hand-off services to transition to recovery services.

12. Create or support school-based contacts that parents can engage with to seek immediate treatment services for their child; and support prevention, intervention, treatment, and recovery programs focused on young people.

13. Develop and support best practices on addressing OUD in the workplace.

14. Support assistance programs for health care providers with OUD.

15. Engage non-profits and the faith community as a system to support outreach for treatment.

16. Support centralized call centers that provide information and connections to appropriate services and supports for persons with OUD and any co-occurring SUD/MH conditions.

D. ADDRESS THE NEEDS OF CRIMINAL JUSTICE-INVOLVED PERSONS

Address the needs of persons with OUD and any co-occurring SUD/MH conditions who are involved in, are at risk of becoming involved in, or are transitioning out of the criminal justice system through evidence-based or evidence-informed programs or strategies that may include, but are not limited to, those that:

1. Support pre-arrest or pre-arraignment diversion and deflection strategies for persons with OUD and any co-occurring SUD/MH conditions, including established strategies such as:

    1. Self-referral strategies such as the Angel Programs or the Police Assisted Addiction Recovery Initiative ("*PAARI*");

    2. Active outreach strategies such as the Drug Abuse Response Team ("*DART*") model;

    3. "Naloxone Plus" strategies, which work to ensure that individuals who have received naloxone to reverse the effects of an overdose are then linked to treatment programs or other appropriate services;

    4. Officer prevention strategies, such as the Law Enforcement Assisted Diversion ("*LEAD*") model;

5. Officer intervention strategies such as the Leon County, Florida Adult Civil Citation Network or the Chicago Westside Narcotics Diversion to Treatment Initiative; or

6. Co-responder and/or alternative responder models to address OUD-related 911 calls with greater SUD expertise.

2. Support pre-trial services that connect individuals with OUD and any co-occurring SUD/MH conditions to evidence-informed treatment, including MAT, and related services.

3. Support treatment and recovery courts that provide evidence-based options for persons with OUD and any co-occurring SUD/MH conditions.

4. Provide evidence-informed treatment, including MAT, recovery support, harm reduction, or other appropriate services to individuals with OUD and any co-occurring SUD/MH conditions who are incarcerated in jail or prison.

5. Provide evidence-informed treatment, including MAT, recovery support, harm reduction, or other appropriate services to individuals with OUD and any co-occurring SUD/MH conditions who are leaving jail or prison or have recently left jail or prison, are on probation or parole, are under community corrections supervision, or are in re-entry programs or facilities.

6. Support critical time interventions ("*CTI*"), particularly for individuals living with dual-diagnosis OUD/serious mental illness, and services for individuals who face immediate risks and service needs and risks upon release from correctional settings.

7. Provide training on best practices for addressing the needs of criminal justice-involved persons with OUD and any co-occurring SUD/MH conditions to law enforcement, correctional, or judicial personnel or to providers of treatment, recovery, harm reduction, case management, or other services offered in connection with any of the strategies described in this section.

E. ADDRESS THE NEEDS OF PREGNANT OR PARENTING WOMEN AND THEIR FAMILIES, INCLUDING BABIES WITH NEONATAL ABSTINENCE SYNDROME

Address the needs of pregnant or parenting women with OUD and any co-occurring SUD/MH conditions, and the needs of their families, including babies with neonatal abstinence syndrome ("*NAS*"), through evidence-based or evidence-informed programs or strategies that may include, but are not limited to, those that:

1. Support evidence-based or evidence-informed treatment, including MAT, recovery services and supports, and prevention services for pregnant women—or women who

could become pregnant—who have OUD and any co-occurring SUD/MH conditions, and other measures to educate and provide support to families affected by Neonatal Abstinence Syndrome.

2. Expand comprehensive evidence-based treatment and recovery services, including MAT, for uninsured women with OUD and any co-occurring SUD/MH conditions for up to 12 months postpartum.

3. Provide training for obstetricians or other healthcare personnel who work with pregnant women and their families regarding treatment of OUD and any co-occurring SUD/MH conditions.

4. Expand comprehensive evidence-based treatment and recovery support for NAS babies; expand services for better continuum of care with infant-need dyad; and expand long-term treatment and services for medical monitoring of NAS babies and their families.

5. Provide training to health care providers who work with pregnant or parenting women on best practices for compliance with federal requirements that children born with NAS get referred to appropriate services and receive a plan of safe care.

6. Provide child and family supports for parenting women with OUD and any co-occurring SUD/MH conditions.

7. Provide enhanced family support and child care services for parents with OUD and any co-occurring SUD/MH conditions.

8. Provide enhanced support for children and family members suffering trauma as a result of addiction in the family; and offer trauma-informed behavioral health treatment for adverse childhood events.

9. Offer home-based wrap-around services to persons with OUD and any co-occurring SUD/MH conditions, including, but not limited to, parent skills training.

10. Provide support for Children's Services—Fund additional positions and services, including supportive housing and other residential services, relating to children being removed from the home and/or placed in foster care due to custodial opioid use.

PART TWO: PREVENTION

F. PREVENT OVER-PRESCRIBING AND ENSURE APPROPRIATE PRESCRIBING AND DISPENSING OF OPIOIDS

Support efforts to prevent over-prescribing and ensure appropriate prescribing and dispensing of opioids through evidence-based or evidence-informed programs or strategies that may include, but are not limited to, the following:

1. Funding medical provider education and outreach regarding best prescribing practices for opioids consistent with the Guidelines for Prescribing Opioids for Chronic Pain from the U.S. Centers for Disease Control and Prevention, including providers at hospitals (academic detailing).

2. Training for health care providers regarding safe and responsible opioid prescribing, dosing, and tapering patients off opioids.

3. Continuing Medical Education (CME) on appropriate prescribing of opioids.

4. Providing Support for non-opioid pain treatment alternatives, including training providers to offer or refer to multi-modal, evidence-informed treatment of pain.

5. Supporting enhancements or improvements to Prescription Drug Monitoring Programs ("*PDMPs*"), including, but not limited to, improvements that:

    1. Increase the number of prescribers using PDMPs;

    2. Improve point-of-care decision-making by increasing the quantity, quality, or format of data available to prescribers using PDMPs, by improving the interface that prescribers use to access PDMP data, or both; or

    3. Enable states to use PDMP data in support of surveillance or intervention strategies, including MAT referrals and follow-up for individuals identified within PDMP data as likely to experience OUD in a manner that complies with all relevant privacy and security laws and rules.

6. Ensuring PDMPs incorporate available overdose/naloxone deployment data, including the United States Department of Transportation's Emergency Medical Technician overdose database in a manner that complies with all relevant privacy and security laws and rules.

7. Increasing electronic prescribing to prevent diversion or forgery.

8. Educating dispensers on appropriate opioid dispensing.

G. PREVENT MISUSE OF OPIOIDS

Support efforts to discourage or prevent misuse of opioids through evidence-based or evidence-informed programs or strategies that may include, but are not limited to, the following:

1. Funding media campaigns to prevent opioid misuse.

2. Corrective advertising or affirmative public education campaigns based on evidence.

3. Public education relating to drug disposal.

4. Drug take-back disposal or destruction programs.

5. Funding community anti-drug coalitions that engage in drug prevention efforts.

6. Supporting community coalitions in implementing evidence-informed prevention, such as reduced social access and physical access, stigma reduction—including staffing, educational campaigns, support for people in treatment or recovery, or training of coalitions in evidence-informed implementation, including the Strategic Prevention Framework developed by the U.S. Substance Abuse and Mental Health Services Administration ("*SAMHSA*").

7. Engaging non-profits and faith-based communities as systems to support prevention.

8. Funding evidence-based prevention programs in schools or evidence-informed school and community education programs and campaigns for students, families, school employees, school athletic programs, parent-teacher and student associations, and others.

9. School-based or youth-focused programs or strategies that have demonstrated effectiveness in preventing drug misuse and seem likely to be effective in preventing the uptake and use of opioids.

10. Create or support community-based education or intervention services for families, youth, and adolescents at risk for OUD and any co-occurring SUD/MH conditions.

11. Support evidence-informed programs or curricula to address mental health needs of young people who may be at risk of misusing opioids or other drugs, including emotional modulation and resilience skills.

12. Support greater access to mental health services and supports for young people, including services and supports provided by school nurses, behavioral health workers or other school staff, to address mental health needs in young people that (when not properly addressed) increase the risk of opioid or another drug misuse.

H. PREVENT OVERDOSE DEATHS AND OTHER HARMS (HARM REDUCTION)

Support efforts to prevent or reduce overdose deaths or other opioid-related harms through evidence-based or evidence-informed programs or strategies that may include, but are not limited to, the following:

1. Increased availability and distribution of naloxone and other drugs that treat overdoses for first responders, overdose patients, individuals with OUD and their friends and family members, schools, community navigators and outreach workers, persons being released from jail or prison, or other members of the general public.

2. Public health entities providing free naloxone to anyone in the community.

3. Training and education regarding naloxone and other drugs that treat overdoses for first responders, overdose patients, patients taking opioids, families, schools, community support groups, and other members of the general public.

4. Enabling school nurses and other school staff to respond to opioid overdoses, and provide them with naloxone, training, and support.

5. Expanding, improving, or developing data tracking software and applications for overdoses/naloxone revivals.

6. Public education relating to emergency responses to overdoses.

7. Public education relating to immunity and Good Samaritan laws.

8. Educating first responders regarding the existence and operation of immunity and Good Samaritan laws.

9. Syringe service programs and other evidence-informed programs to reduce harms associated with intravenous drug use, including supplies, staffing, space, peer support services, referrals to treatment, fentanyl checking, connections to care, and the full range of harm reduction and treatment services provided by these programs.

10. Expanding access to testing and treatment for infectious diseases such as HIV and Hepatitis C resulting from intravenous opioid use.

11. Supporting mobile units that offer or provide referrals to harm reduction services, treatment, recovery supports, health care, or other appropriate services to persons that use opioids or persons with OUD and any co-occurring SUD/MH conditions.

12. Providing training in harm reduction strategies to health care providers, students, peer recovery coaches, recovery outreach specialists, or other professionals that provide care to persons who use opioids or persons with OUD and any co-occurring SUD/MH conditions.

13. Supporting screening for fentanyl in routine clinical toxicology testing.

PART THREE: OTHER STRATEGIES

I. FIRST RESPONDERS

In addition to items in section C, D and H relating to first responders, support the following:

1. Education of law enforcement or other first responders regarding appropriate practices and precautions when dealing with fentanyl or other drugs.

2. Provision of wellness and support services for first responders and others who experience secondary trauma associated with opioid-related emergency events.

J. LEADERSHIP, PLANNING AND COORDINATION

Support efforts to provide leadership, planning, coordination, facilitations, training and technical assistance to abate the opioid epidemic through activities, programs, or strategies that may include, but are not limited to, the following:

1. Statewide, regional, local or community regional planning to identify root causes of addiction and overdose, goals for reducing harms related to the opioid epidemic, and areas and populations with the greatest needs for treatment intervention services, and to support training and technical assistance and other strategies to abate the opioid epidemic described in this opioid abatement strategy list.

2. A dashboard to (a) share reports, recommendations, or plans to spend opioid settlement funds; (b) to show how opioid settlement funds have been spent; (c) to report program or strategy outcomes; or (d) to track, share or visualize key opioid- or health-related indicators and supports as identified through collaborative statewide, regional, local or community processes.

3. Invest in infrastructure or staffing at government or not-for-profit agencies to support collaborative, cross-system coordination with the purpose of preventing overprescribing, opioid misuse, or opioid overdoses, treating those with OUD and any co-occurring SUD/MH conditions, supporting them in treatment or recovery, connecting them to care, or implementing other strategies to abate the opioid epidemic described in this opioid abatement strategy list.

4. Provide resources to staff government oversight and management of opioid abatement programs.

K. TRAINING

In addition to the training referred to throughout this document, support training to abate the opioid epidemic through activities, programs, or strategies that may include, but are not limited to, those that:

1. Provide funding for staff training or networking programs and services to improve the capability of government, community, and not-for-profit entities to abate the opioid crisis.

2. Support infrastructure and staffing for collaborative cross-system coordination to prevent opioid misuse, prevent overdoses, and treat those with OUD and any co-occurring SUD/MH conditions, or implement other strategies to abate the opioid epidemic described in this opioid abatement strategy list (*e.g.*, health care, primary care, pharmacies, PDMPs, etc.).

L. RESEARCH

Support opioid abatement research that may include, but is not limited to, the following:

1. Monitoring, surveillance, data collection and evaluation of programs and strategies described in this opioid abatement strategy list.

2. Research non-opioid treatment of chronic pain.

3. Research on improved service delivery for modalities such as SBIRT that demonstrate promising but mixed results in populations vulnerable to opioid use disorders.

4. Research on novel harm reduction and prevention efforts such as the provision of fentanyl test strips.

5. Research on innovative supply-side enforcement efforts such as improved detection of mail-based delivery of synthetic opioids.

6. Expanded research on swift/certain/fair models to reduce and deter opioid misuse within criminal justice populations that build upon promising approaches used to address other substances (*e.g.*, Hawaii HOPE and Dakota 24/7).

7. Epidemiological surveillance of OUD-related behaviors in critical populations, including individuals entering the criminal justice system, including, but not limited to approaches modeled on the Arrestee Drug Abuse Monitoring (“ADAM”) system.

8. Qualitative and quantitative research regarding public health risks and harm reduction opportunities within illicit drug markets, including surveys of market participants who sell or distribute illicit opioids.

Geospatial analysis of access barriers to MAT and their association with treatment engagement and treatment outcomes

EXHIBIT F

Exhibit F-1: List of States and State Global Allocation Percentage

Alabama	1.5958653635%
Alaska	0.2283101787%
American Samoa	0.0171221696%
Arizona	2.3755949882%
Arkansas	0.9322152924%
California	9.9213830698%
Colorado	1.6616291219%
Connecticut	1.2938102647%
Delaware	0.4420285052%
District of Columbia	0.1799774824%
Florida	7.0259134409%
Georgia	2.7882080114%
Guam	0.0480366565%
Hawaii	0.3246488040%
Idaho	0.4919080117%
Illinois	3.3263363702%
Indiana	2.2168933059%
Iowa	0.7419256132%
Kansas	0.7840793410%
Kentucky	1.9963344879%
Louisiana	1.4650905059%
Maine	0.5293231313%
Maryland	2.1106090494%
Massachusetts	2.3035761083%
Michigan	3.4020234989%
Minnesota	1.2972597706%
Mississippi	0.8624327860%
Missouri	2.0056475170%
Montana	0.3125481816%
N. Mariana Islands	0.0167059202%
Nebraska	0.4171546352%
Nevada	1.2017657135%
New Hampshire	0.5784834777%
New Jersey	2.7551354545%
New Mexico	0.7989379794%
New York	5.3903813405%

North Carolina	3.2502525994%
North Dakota	0.1700251989%
Ohio	4.3567051408%
Oklahoma	1.5322312508%
Oregon	1.3741405009%
Pennsylvania	4.5882419559%
Puerto Rico	0.7101195950%
Rhode Island	0.4465429178%
South Carolina	1.5393083548%
South Dakota	0.1982071487%
Tennessee	2.6881474977%
Texas	6.2932157196%
Utah	1.1466798699%
Vermont	0.2544890561%
Virgin Islands	0.0315673573%
Virginia	2.2801150757%
Washington	2.3189040182%
West Virginia	1.0567416533%
Wisconsin	1.7582560561%
Wyoming	0.1668134842%

Exhibit F-2: Adjusted Allocation Percentages (to be multiplied by $4,279,160,837)

Alabama	1.7662713506%
Alaska	0.2526890657%
American Samoa	0.0189504693%
Arizona	2.6292602523%
Arkansas	1.0317569396%
California	10.9807851434%
Colorado	1.8390573418%
Connecticut	1.4319629061%
Delaware	0.4892281659%
District of Columbia	0.1991954197%
Georgia	3.0859319606%
Guam	0.0531659951%
Hawaii	0.3593146982%
Idaho	0.5444337900%
Illinois	3.6815214914%
Indiana	2.4536124557%
Iowa	0.8211481901%
Kansas	0.8678030794%
Kentucky	2.2095024385%
Louisiana	1.6215323960%
Maine	0.5858440840%
Maryland	2.3359792007%
Massachusetts	2.5495512198%
Michigan	3.7652904672%
Minnesota	1.4357807492%
Mississippi	0.9545230798%
Missouri	2.2198099098%
Montana	0.3459219753%
N. Mariana Islands	0.0184897729%
Nebraska	0.4616982721%
Nevada	1.3300898675%
New Hampshire	0.6402537562%
New Jersey	3.0493279268%
New York	5.1179635833%
North Carolina	3.5973135202%
North Dakota	0.1881804346%
Ohio	4.8219127059%
Oklahoma	1.6958424079%

Oregon	1.5208707790%
Pennsylvania	5.0781729473%
Puerto Rico	0.7859459356%
Rhode Island	0.4942246260%
South Carolina	1.7036752028%
South Dakota	0.2193716438%
Tennessee	2.9751870176%
Texas	6.9652032577%
Utah	1.2691219754%
Vermont	0.2816633151%
Virgin Islands	0.0349381095%
Virginia	2.5235850256%
Washington	2.5665158389%
Wisconsin	1.9460020688%
Wyoming	0.1846257740%

EXHIBIT G

Subdivisions Eligible to Receive Direct Allocations from the Subdivision Fund and Default Subdivision Fund Allocation Percentages

The Subdivisions set forth on this Exhibit G are eligible to receive direct allocations from the Subdivision Fund, if such Subdivisions are otherwise eligible to receive such funds under this Agreement. By default, the Subdivisions set forth on this Exhibit G shall include all Subdivisions set forth on Exhibit G of the national opioid settlement agreement dated July 21, 2021 with Janssen Pharmaceuticals, Inc., et al., including all amendments up to the Preliminary Agreement Date of this Agreement. A State may elect to add any additional Subdivisions to this Exhibit G at any time prior to the Initial Subdivision Participation Date.

Immediately upon the effectiveness of any State-Subdivision Agreement, Allocation Statute, Statutory Trust, or voluntary redistribution allowed by Section V.D.3 (or upon the effectiveness of an amendment to any State-Subdivision Agreement, Allocation Statute, Statutory Trust, or voluntary redistribution allowed by Section V.D.3) that addresses allocation from the Subdivision Fund, whether before or after the Initial Subdivision Participation Date, this Exhibit G will automatically be amended to reflect the allocation from the Subdivision Fund pursuant to the State-Subdivision Agreement, Allocation Statute, Statutory Trust, or voluntary redistribution allowed by Section V.D.3.

For the avoidance of doubt, inclusion on this Exhibit G shall not create any claim for any amount of the Settlement Fund, and no such amounts shall be allocated or distributed to any Subdivision included herein if such Subdivision does not otherwise meet all requirements to receive any such funds pursuant to the Agreement.

State ID	Qualifying Subdivision	Consolidated State Allocation
AL1	Abbeville City, Alabama	0.05373276788371%
AL2	Alabaster City, Alabama	0.50906155914420%
AL3	Albertville City, Alabama	0.30073173498551%
AL4	Alexander City, Alabama	0.31021586558805%
AL5	Anniston City, Alabama	0.80101152336447%
AL6	Arab City, Alabama	0.19249341507944%
AL7	Argo Town, Alabama	0.02394095067075%
AL8	Ashland Town, Alabama	0.03903714157458%
AL9	Ashville City, Alabama	0.01799180180480%
AL10	Athens City, Alabama	0.34982234331958%
AL11	Attalla City, Alabama	0.16452490218524%
AL12	Auburn City, Alabama	0.49379760320342%
AL13	Autauga County, Alabama	0.25196509791885%
AL14	Baldwin County, Alabama	1.47023732753838%
AL15	Barbour County, Alabama	0.07277031699064%
AL235	Bay Minette City, Alabama	0.12614031368064%
AL16	Berry Town, Alabama	0.02060389726110%
AL17	Bessemer City, Alabama	0.58643322270761%
AL18	Bibb County, Alabama	0.32904730429155%
AL19	Birmingham City, Alabama	4.18442675390468%
AL20	Blount County, Alabama	0.74378299576171%
AL21	Boaz City, Alabama	0.16593254403002%
AL22	Brent City, Alabama	0.06233303941215%
AL236	Brewton City, Alabama	0.22130588319049%
AL23	Bridgeport City, Alabama	0.00151300231408%
AL24	Brookwood Town, Alabama	0.00696629136887%
AL25	Brundidge City, Alabama	0.01089862331296%
AL26	Bullock County, Alabama	0.06418709145492%
AL27	Butler County, Alabama	0.05373624201937%
AL28	Butler Town, Alabama	0.08203304449913%
AL29	Calera City, Alabama	0.24319709382201%
AL30	Calhoun County, Alabama	0.73004532177506%
AL31	Camp Hill Town, Alabama	0.00607441256105%
AL32	Carbon Hill City, Alabama	0.09325758719295%
AL33	Cedar Bluff Town, Alabama	0.05726177540570%
AL34	Center Point City, Alabama	0.01073160505284%
AL35	Centre City, Alabama	0.14450358825257%
AL36	Centreville City, Alabama	0.02291656767950%
AL37	Chambers County, Alabama	0.42645541213545%
AL39	Cherokee County, Alabama	0.30474566041478%
AL40	Cherokee Town, Alabama	0.00837480986470%
AL41	Chickasaw City, Alabama	0.08065098787772%
AL237	Childersburg City, Alabama	0.09673766459870%
AL42	Chilton County, Alabama	0.65834253848868%
AL43	Choctaw County, Alabama	0.12575403525127%
AL44	Clanton City, Alabama	0.16879497206515%
AL45	Clarke County, Alabama	0.24012462668797%
AL46	Clay County, Alabama	0.16558350703617%
AL47	Cleburne County, Alabama	0.20515352257755%

State ID	Qualifying Subdivision	Consolidated State Allocation
AL48	Cleveland Town, Alabama	0.01274799988344%
AL49	Coffee County, Alabama	0.31178909707642%
AL50	Colbert County, Alabama	0.31838531182613%
AL238	Columbiana City, Alabama	0.05006719760858%
AL51	Conecuh County, Alabama	0.15445396734178%
AL52	Coosa County, Alabama	0.12178647492221%
AL53	Cordova City, Alabama	0.09563175305939%
AL54	Covington County, Alabama	0.45692575726444%
AL55	Crenshaw County, Alabama	0.14376470128801%
AL56	Cullman City, Alabama	0.53795721169973%
AL57	Cullman County, Alabama	0.89679454743357%
AL58	Dadeville City, Alabama	0.02418310117309%
AL59	Dale County, Alabama	0.24320907471975%
AL60	Daleville City, Alabama	0.07752611649176%
AL61	Dallas County, Alabama	0.20683597829357%
AL62	Daphne City, Alabama	0.32129647516618%
AL63	Dauphin Island Town, Alabama	0.04612275489251%
AL64	De Kalb County, Alabama	0.40059258260517%
AL65	Decatur City, Alabama	1.88368966680214%
AL66	Demopolis City, Alabama	0.14633737991542%
AL67	Dora City, Alabama	0.09240281994643%
AL68	Dothan City, Alabama	1.09030734534639%
AL69	Double Springs Town, Alabama	0.08025220905367%
AL70	Douglas Town, Alabama	0.00097275798472%
AL239	East Brewton City, Alabama	0.02656781932074%
AL71	Elmore County, Alabama	0.55644997087924%
AL72	Enterprise City, Alabama	0.33245406769430%
AL73	Escambia County, Alabama	0.65163401499834%
AL74	Etowah County, Alabama	1.02826912043695%
AL75	Eufaula City, Alabama	0.21259346526420%
AL76	Evergreen City, Alabama	0.04145059439568%
AL77	Fairfield City, Alabama	0.11699106378085%
AL78	Fairhope City, Alabama	0.22328055592462%
AL79	Faunsdale Town, Alabama	0.00027565805375%
AL80	Fayette City, Alabama	0.07882554063416%
AL81	Fayette County, Alabama	0.13876915395782%
AL82	Florence City, Alabama	0.89173419286246%
AL83	Foley City, Alabama	0.34393082614331%
AL84	Fort Deposit Town, Alabama	0.00516071488254%
AL85	Fort Payne City, Alabama	0.58210250156216%
AL86	Franklin County, Alabama	0.28807497174883%
AL87	Fultondale City, Alabama	0.09530547652440%
AL88	Gadsden City, Alabama	0.83652189774753%
AL90	Geneva City, Alabama	0.06639031036577%
AL91	Geneva County, Alabama	0.22068995465343%
AL92	Georgiana Town, Alabama	0.01833389052733%
AL93	Geraldine Town, Alabama	0.01101187364176%
AL94	Gilbertown, Alabama	0.00201561558522%
AL95	Grant Town, Alabama	0.01702349201247%

State ID	Qualifying Subdivision	Consolidated State Allocation
AL96	Graysville City, Alabama	0.03683772148497%
AL97	Greene County, Alabama	0.07053609060731%
AL98	Greensboro City, Alabama	0.02495617752877%
AL99	Greenville City, Alabama	0.17114173446901%
AL100	Guin City, Alabama	0.02535375501618%
AL101	Gulf Shores City, Alabama	0.48785192847313%
AL102	Guntersville City, Alabama	0.25418471345127%
AL103	Gurley Town, Alabama	0.00751669835675%
AL104	Hale County, Alabama	0.13189455379552%
AL105	Haleyville City, Alabama	0.14259976191105%
AL106	Hamilton City, Alabama	0.09032285168011%
AL107	Hammondville Town, Alabama	0.00490310934680%
AL108	Hartselle City, Alabama	0.06358502699195%
AL109	Headland City, Alabama	0.06278880055472%
AL110	Helena City, Alabama	0.13940462856652%
AL111	Henagar City, Alabama	0.03432173295908%
AL112	Henry County, Alabama	0.08134656178648%
AL113	Homewood City, Alabama	0.40003759755067%
AL114	Hoover City, Alabama	1.41830120728766%
AL115	Houston County, Alabama	0.55870611353893%
AL116	Hueytown City, Alabama	0.19444760015375%
AL117	Huntsville City, Alabama	3.18917672789720%
AL118	Irondale City, Alabama	0.17364096921920%
AL119	Jackson County, Alabama	0.15808077015917%
AL120	Jacksonville City, Alabama	0.25009708439633%
AL121	Jasper City, Alabama	1.40982301753567%
AL122	Jefferson County, Alabama	5.50780373047089%
AL123	Killen Town, Alabama	0.01833161772830%
AL124	Lamar County, Alabama	0.16280419850840%
AL125	Lanett City, Alabama	0.12800105424627%
AL126	Lauderdale County, Alabama	0.47859088932963%
AL127	Lawrence County, Alabama	0.45357831391636%
AL129	Leeds City, Alabama	0.14992359703585%
AL130	Leesburg Town, Alabama	0.01918722915732%
AL131	Leighton Town, Alabama	0.00564699646923%
AL132	Level Plains Town, Alabama	0.00350595484612%
AL133	Limestone County, Alabama	0.58188759217962%
AL134	Lincoln City, Alabama	0.18466222627409%
AL135	Linden City, Alabama	0.01718012033418%
AL136	Locust Fork Town, Alabama	0.00390814286871%
AL137	Louisville Town, Alabama	0.00463180207977%
AL138	Lowndes County, Alabama	0.06941452922326%
AL240	Loxley Town, Alabama	0.04113340905681%
AL139	Luverne City, Alabama	0.01532252921863%
AL140	Macon County, Alabama	0.13647706860490%
AL141	Madison City, Alabama	0.47088048355844%
AL142	Madison County, Alabama	1.31238390221929%
AL143	Marengo County, Alabama	0.04980089049941%
AL144	Marion City, Alabama	0.02355243191090%

State ID	Qualifying Subdivision	Consolidated State Allocation
AL145	Marion County, Alabama	0.22296850061784%
AL146	Marshall County, Alabama	0.74162828487587%
AL147	McKenzie Town, Alabama	0.00440552870209%
AL148	Midfield City, Alabama	0.00038923306812%
AL149	Millbrook City, Alabama	0.24754158163587%
AL150	Mobile City, Alabama	3.22757190115156%
AL151	Mobile County, Alabama	2.76021701591658%
AL152	Monroe County, Alabama	0.18825776187055%
AL153	Monroeville City, Alabama	0.10619523592115%
AL154	Montgomery City, Alabama	1.77726471583620%
AL155	Montgomery County, Alabama	0.98033322388421%
AL156	Moody City, Alabama	0.03620711715990%
AL157	Morgan County, Alabama	0.31373818458719%
AL158	Moulton City, Alabama	0.13546080275305%
AL159	Mountain Brook City, Alabama	0.35653362663731%
AL160	Munford Town, Alabama	0.02417891272917%
AL161	Muscle Shoals City, Alabama	0.26828019094231%
AL162	Nauvoo Town, Alabama	0.01870510354600%
AL163	New Hope City, Alabama	0.01307908176496%
AL164	Northport City, Alabama	0.42416628142128%
AL165	Oakman Town, Alabama	0.04189836827309%
AL166	Oneonta City, Alabama	0.27040610221760%
AL167	Opelika City, Alabama	0.53658372677752%
AL168	Opp City, Alabama	0.09265286030826%
AL169	Orange Beach City, Alabama	0.29416707967375%
AL170	Oxford City, Alabama	0.35237875519965%
AL171	Ozark City, Alabama	0.29499421617778%
AL172	Parrish Town, Alabama	0.11686245582433%
AL173	Pelham City, Alabama	0.68738196181712%
AL174	Pell City, Alabama	0.44443071991301%
AL175	Perry County, Alabama	0.05087894401632%
AL176	Phenix City, Alabama	0.62594382078864%
AL177	Pickens County, Alabama	0.28661898422184%
AL178	Piedmont City, Alabama	0.14348703018370%
AL179	Pike County, Alabama	0.02971580831969%
AL181	Pleasant Grove City, Alabama	0.05168400190121%
AL182	Powell Town, Alabama	0.00530497268382%
AL183	Prattville City, Alabama	0.60331346344410%
AL184	Priceville Town, Alabama	0.01217687795583%
AL185	Prichard City, Alabama	0.11003827933194%
AL186	Ragland Town, Alabama	0.01519801230036%
AL187	Rainbow City, Alabama	0.13460113275434%
AL188	Rainsville City, Alabama	0.18816655769234%
AL189	Randolph County, Alabama	0.17748105799125%
AL190	Red Bay City, Alabama	0.06274639661854%
AL241	Roanoke City, Alabama	0.10908084650639%
AL191	Robertsdale City, Alabama	0.08564458709446%
AL192	Rockford Town, Alabama	0.00588596505293%
AL193	Russell County, Alabama	0.17037596353878%

State ID	Qualifying Subdivision	Consolidated State Allocation
AL194	Russellville City, Alabama	0.31690084937415%
AL195	Saraland City, Alabama	0.24847953332688%
AL196	Satsuma City, Alabama	0.06260301546832%
AL197	Scottsboro City, Alabama	0.66355520306333%
AL198	Selma City, Alabama	0.26395099581907%
AL271	Semmes City, Alabama	0.04200467033057%
AL199	Sheffield City, Alabama	0.16093939937308%
AL200	Shelby County, Alabama	1.63752907032528%
AL201	Sipsey Town, Alabama	0.03758758282199%
AL202	Slocomb City, Alabama	0.04424009805052%
AL203	Spanish Fort City, Alabama	0.02939683721014%
AL204	Springville City, Alabama	0.05781214992503%
AL205	St Clair County, Alabama	1.03787114437202%
AL206	Sumiton City, Alabama	0.23258714845438%
AL242	Summerdale Town, Alabama	0.02450324115071%
AL207	Sumter County, Alabama	0.11813782076557%
AL208	Sweet Water Town, Alabama	0.00030000947192%
AL209	Sylacauga City, Alabama	0.23084021018303%
AL210	Talladega City, Alabama	0.22820288665750%
AL211	Talladega County, Alabama	0.51585677368324%
AL212	Tallapoosa County, Alabama	0.19470098477700%
AL213	Tarrant City, Alabama	0.09199699544540%
AL214	Thomasville City, Alabama	0.08852500271049%
AL215	Troy City, Alabama	0.32823721378024%
AL216	Trussville City, Alabama	0.24448154995938%
AL217	Tuscaloosa City, Alabama	1.95122494838196%
AL218	Tuscaloosa County, Alabama	1.01248511560961%
AL219	Tuscumbia City, Alabama	0.08432211027618%
AL220	Tuskegee City, Alabama	0.09179124219610%
AL221	Union Springs City, Alabama	0.04230906305776%
AL222	Uniontown, Alabama	0.01814515080219%
AL223	Vance Town, Alabama	0.00962932999198%
AL224	Vernon City, Alabama	0.03170902060019%
AL225	Vestavia Hills City, Alabama	0.30835957321481%
AL226	Walker County, Alabama	1.46359656592768%
AL227	Washington County, Alabama	0.16134379525758%
AL228	Weaver City, Alabama	0.04227639968885%
AL229	West Blocton Town, Alabama	0.04044773805810%
AL243	Wetumpka City, Alabama	0.16601095559654%
AL230	Wilcox County, Alabama	0.08791066513276%
AL231	Winfield City, Alabama	0.19023873350485%
AL233	Woodville Town, Alabama	0.00046128079736%
AL234	Yellow Bluff Town, Alabama	0.00293074188026%
AL243	Attentus Mouton, LLC d/b/a Lawrence Medical Center (Lawrence County Health Care Authority), Alabama	0.14143420563150%

State ID	Qualifying Subdivision	Consolidated State Allocation
AL244	Bibb County Healthcare Authority d/b/a Bibb Medical Center, Alabama	0.52488215603592%
AL245	Cullman Regional Medical Center, Inc. (Healthcare Authority of Cullman County), Alabama	0.43745923357493%
AL246	Dale County Healthcare Authority d/b/a Dale Medical Center, Alabama	0.29945201925755%
AL247	DCH Health Care Authority (Tuscaloosa) d/b/a DCH Regional Medical Center and Northport Medical Center, Alabama	2.03896534839883%
AL248	Decatur Morgan Hospital-Parkway (Health Care Authority of the City of Huntsville), Alabama	0.39470005890361%
AL249	Escambia County Health Care Authority d/b/a D.W. McMillan Memorial Hospital and Atmore Community Hospital, Alabama	0.15477293845133%
AL250	Geneva County Health Care Authority d/b/a Wiregrass Medical Center, Alabama	0.48787124726488%
AL251	Greene County Health System, Alabama	0.30954587690265%
AL252	Health Care Authority of Clarke County d/b/a Grove Hill Memorial Hospital, Alabama	0.10093886866801%
AL253	Health Care Authority of the City of Huntsville d/b/a Huntsville Hospital, Alabama	3.03261217443931%
AL254	Healthcare Authority for Baptist Health, an affiliate of UAB Health System d/b/a Baptist Medical Center East (Montgomery), Alabama	0.61909178627386%
AL255	Healthcare Authority for Baptist Health, an affiliate of UAB Health System d/b/a Baptist Medical Center South (Montgomery), Alabama	1.30211153244469%
AL256	Healthcare Authority for Baptist Health, an affiliate of UAB Health System d/b/a Prattville Baptist Hospital, Alabama	0.18505460879230%

State ID	Qualifying Subdivision	Consolidated State Allocation
AL257	HH Health System-Athens Limestone, LLC d/b/a Athens Limestone Hospital (Healthcare Authority of the City of Huntsville), Alabama	0.21708503564384%
AL258	HH Health System-Morgan, LLC d/b/a Decatur Morgan Hospital Decatur, Alabama	1.08542517821921%
AL259	HH Health Systems-Shoals LLC d/b/a Hellen Keller Hospital (Healthcare Authority of the City of Huntsville), Alabama	0.56573675758889%
AL260	HH Health Systems-Shoals, LLC d/b/a Red Bay Hospital (Healthcare Authority of the City of Huntsville), Alabama	0.08222918705539%
AL261	Jackson County Healthcare Authority, Alabama	0.31247087184822%
AL262	Jefferson County Board of Health, Alabama	3.08543617986526%
AL263	Lakeland Community Hospital HCA Winston County, Alabama	0.19514849890595%
AL264	Marshall County Health Care Authority, Alabama	0.29602506041199%
AL265	Marshall County Health Care Authority, Alabama	0.64138762006979%
AL266	Medical West Hospital Authority (UAB), Alabama	0.83442806540712%
AL267	Mobile County Board of Health, Alabama	1.93445993855628%
AL268	Monroe County Health Care Authority d/b/a Monroe County Hospital, Alabama	0.16486682856498%
AL269	Sylacauga Health Care Authority d/b/a Coosa Valley Medical Center, Alabama	0.47777735715122%
AL270	Tombigbee Health Care Authority d/b/a Brian W. Whitfield Memorial Hospital, Alabama	0.20524238901961%

State ID	Qualifying Subdivision	Consolidated State Allocation
AK1	Anchorage Municipality, Alaska	47.6578000000%
AK2	Fairbanks City, Alaska	5.1226000000%
AK3	Fairbanks North Star Borough, Alaska	10.9627000000%
AK4	Juneau City and Borough, Alaska	5.2324000000%
AK5	Kenai Peninsula Borough, Alaska	9.4922000000%
AK6	Ketchikan Gateway Borough, Alaska	2.2406000000%
AK7	Kodiak Island Borough, Alaska	2.1839000000%
AK8	Matanuska-Susitna Borough, Alaska	15.4726000000%
AK9	Wasilla City, Alaska	1.6351000000%

State ID	Qualifying Subdivision	Consolidated State Allocation
AZ1	Apache County, Arizona	0.3907470000%
AZ2	Apache Junction City, Arizona	0.2201340000%
AZ3	Avondale City, Arizona	0.5677140000%
AZ4	Benson City, Arizona	0.0652960000%
AZ5	Bisbee City, Arizona	0.0643685000%
AZ6	Buckeye City, Arizona	0.2664780000%
AZ7	Bullhead City, Arizona	0.6416380000%
AZ8	Camp Verde Town, Arizona	0.0416227000%
AZ9	Carefree Town, Arizona	0.0231720000%
AZ10	Casa Grande City, Arizona	0.2125144000%
AZ11	Cave Creek Town, Arizona	0.0347580000%
AZ12	Chandler City, Arizona	1.6567980000%
AZ13	Chino Valley Town, Arizona	0.0291788000%
AZ14	Clarkdale Town, Arizona	0.0308952000%
AZ15	Clifton Town, Arizona	0.0102870000%
AZ16	Cochise County, Arizona	1.1773685000%
AZ17	Coconino County, Arizona	1.2011808000%
AZ18	Colorado City Town, Arizona	0.0298778000%
AZ19	Coolidge City, Arizona	0.0644448000%
AZ20	Cottonwood City, Arizona	0.2098299000%
AZ21	Dewey-Humboldt Town, Arizona	0.0660814000%
AZ22	Douglas City, Arizona	0.1565620000%
AZ23	Duncan Town, Arizona	0.0002520000%
AZ24	Eagar Town, Arizona	0.1425540000%
AZ25	El Mirage City, Arizona	0.2259270000%
AZ26	Eloy City, Arizona	1.3418328000%
AZ27	Flagstaff City, Arizona	0.3114360000%
AZ28	Florence Town, Arizona	0.0456484000%
AZ29	Fountain Hills Town, Arizona	0.0984810000%
AZ30	Fredonia Town, Arizona	0.0052328000%
AZ31	Gila Bend Town, Arizona	0.0173790000%
AZ32	Gila County, Arizona	0.7780446000%
AZ33	Gilbert Town, Arizona	0.9906030000%
AZ34	Glendale City, Arizona	1.5235590000%
AZ35	Globe City, Arizona	0.1168266000%
AZ36	Goodyear City, Arizona	0.4402680000%
AZ37	Graham County, Arizona	0.4476494000%
AZ38	Greenlee County, Arizona	0.0794610000%
AZ39	Guadalupe Town, Arizona	0.0000000000%
AZ40	Hayden Town, Arizona	0.0263802000%
AZ41	Holbrook City, Arizona	0.0575625000%
AZ42	Huachuca City Town, Arizona	0.0168805000%
AZ43	Jerome Town, Arizona	0.0012873000%
AZ44	Kearny Town, Arizona	0.0107408000%
AZ45	Kingman City, Arizona	0.4853918000%
AZ46	La Paz County, Arizona	0.2670171000%
AZ47	Lake Havasu City, Arizona	0.6793526000%
AZ48	Litchfield Park City, Arizona	0.0231720000%
AZ49	Mammoth Town, Arizona	0.0061376000%

State ID	Qualifying Subdivision	Consolidated State Allocation
AZ50	Marana Town, Arizona	0.3841282000%
AZ51	Maricopa City, Arizona	0.1047228000%
AZ52	Maricopa County, Arizona	29.8513290000%
AZ53	Mesa City, Arizona	3.5105580000%
AZ54	Miami Town, Arizona	0.0309482000%
AZ55	Mohave County, Arizona	3.0617398000%
AZ56	Navajo County, Arizona	1.0789515000%
AZ57	Nogales City, Arizona	0.0834350000%
AZ58	Oro Valley Town, Arizona	0.3207284000%
AZ59	Page City, Arizona	0.0575608000%
AZ60	Paradise Valley Town, Arizona	0.1969620000%
AZ61	Parker Town, Arizona	0.0156219000%
AZ62	Patagonia Town, Arizona	0.0024790000%
AZ63	Payson Town, Arizona	0.1846614000%
AZ64	Peoria City, Arizona	0.8747430000%
AZ65	Phoenix City, Arizona	12.3275040000%
AZ66	Pima County, Arizona	13.4612693000%
AZ67	Pima Town, Arizona	0.0159618000%
AZ68	Pinal County, Arizona	2.0334636000%
AZ69	Pinetop-Lakeside Town, Arizona	0.0729125000%
AZ70	Prescott City, Arizona	0.5917289000%
AZ71	Prescott Valley Town, Arizona	0.3471419000%
AZ72	Quartzsite Town, Arizona	0.0183911000%
AZ73	Queen Creek Town, Arizona	0.0637230000%
AZ74	Safford City, Arizona	0.1929077000%
AZ75	Sahuarita Town, Arizona	0.1510407000%
AZ76	San Luis City, Arizona	0.0963840000%
AZ77	Santa Cruz County, Arizona	0.2840860000%
AZ78	Scottsdale City, Arizona	2.3114070000%
AZ79	Sedona City, Arizona	0.0690392000%
AZ80	Show Low City, Arizona	0.1441365000%
AZ81	Sierra Vista City, Arizona	0.3084865000%
AZ82	Snowflake Town, Arizona	0.0451290000%
AZ83	Somerton City, Arizona	0.0449792000%
AZ84	South Tucson City, Arizona	0.0578057000%
AZ85	Springerville Town, Arizona	0.0740370000%
AZ86	St. Johns City, Arizona	0.0826620000%
AZ87	Star Valley Town, Arizona	0.0039970000%
AZ88	Superior Town, Arizona	0.0168784000%
AZ89	Surprise City, Arizona	0.5677140000%
AZ90	Taylor Town, Arizona	0.0411380000%
AZ91	Tempe City, Arizona	1.8943110000%
AZ92	Thatcher Town, Arizona	0.0624092000%
AZ93	Tolleson City, Arizona	0.1564110000%
AZ94	Tombstone City, Arizona	0.0215180000%
AZ95	Tucson City, Arizona	4.2720277000%
AZ96	Tusayan Town, Arizona	0.0113096000%
AZ97	Wellton Town, Arizona	0.0122488000%
AZ98	Wickenburg Town, Arizona	0.0579300000%

State ID	Qualifying Subdivision	Consolidated State Allocation
AZ99	Willcox City, Arizona	0.0443345000%
AZ100	Williams City, Arizona	0.0324096000%
AZ101	Winkelman Town, Arizona	0.0011420000%
AZ102	Winslow City, Arizona	0.0950165000%
AZ103	Yavapai County, Arizona	2.9740921000%
AZ104	Youngtown, Arizona	0.0289650000%
AZ105	Yuma City, Arizona	0.5285056000%
AZ106	Yuma County, Arizona	1.3258824000%

State ID	Qualifying Subdivision	Consolidated State Allocation
AR1	Adona City, Arkansas	0.0020790506%
AR2	Alexander City, Arkansas	0.0103476018%
AR3	Alicia Town, Arkansas	0.0002309579%
AR4	Allport Town, Arkansas	0.0026587350%
AR5	Alma City, Arkansas	0.1875236673%
AR6	Almyra Town, Arkansas	0.0010881066%
AR7	Alpena Town, Arkansas	0.0141319347%
AR8	Altheimer City, Arkansas	0.0071081808%
AR9	Altus City, Arkansas	0.0161149675%
AR10	Amagon Town, Arkansas	0.0016587759%
AR11	Amity City, Arkansas	0.0105947297%
AR12	Anthonyville Town, Arkansas	0.0010978372%
AR13	Antoine Town, Arkansas	0.0010576270%
AR14	Arkadelphia City, Arkansas	0.2710593166%
AR15	Arkansas City, Arkansas	0.0026365550%
AR16	Arkansas County, Arkansas	0.2272004928%
AR17	Ash Flat City, Arkansas	0.0560964456%
AR18	Ashdown City, Arkansas	0.0210645360%
AR19	Ashley County, Arkansas	0.3024558569%
AR20	Atkins City, Arkansas	0.0507540769%
AR21	Aubrey Town, Arkansas	0.0021166850%
AR22	Augusta City, Arkansas	0.0134645321%
AR23	Austin City, Arkansas	0.0201747613%
AR24	Avoca Town, Arkansas	0.0030227727%
AR25	Bald Knob City, Arkansas	0.1048227005%
AR26	Banks Town, Arkansas	0.0006822846%
AR27	Barling City, Arkansas	0.1588678563%
AR28	Bassett Town, Arkansas	0.0011499243%
AR29	Batesville City, Arkansas	0.1318965785%
AR30	Bauxite Town, Arkansas	0.0049816222%
AR31	Baxter County, Arkansas	0.8690235470%
AR32	Bay City, Arkansas	0.0250493472%
AR33	Bearden City, Arkansas	0.0161101022%
AR34	Beaver Town, Arkansas	0.0051365958%
AR35	Beebe City, Arkansas	0.2412092213%
AR36	Beedeville Town, Arkansas	0.0018030172%
AR37	Bella Vista City, Arkansas	0.5136648745%
AR38	Bellefonte Town, Arkansas	0.0008435545%
AR39	Belleville City, Arkansas	0.0050880860%
AR40	Ben Lomond Town, Arkansas	0.0012499489%
AR41	Benton City, Arkansas	1.3762616667%
AR42	Benton County, Arkansas	1.9493524156%
AR43	Bentonville City, Arkansas	1.3212148347%
AR44	Bergman Town, Arkansas	0.0080191338%
AR45	Berryville City, Arkansas	0.1767673815%
AR47	Big Flat Town, Arkansas	0.0005552148%
AR48	Bigelow Town, Arkansas	0.0028351731%
AR49	Biggers Town, Arkansas	0.0002571446%
AR50	Birdsong Town, Arkansas	0.0001210597%

State ID	Qualifying Subdivision	Consolidated State Allocation
AR51	Black Oak Town, Arkansas	0.0003079439%
AR52	Black Rock City, Arkansas	0.0020552966%
AR53	Black Springs Town, Arkansas	0.0007714338%
AR54	Blevins City, Arkansas	0.0042289340%
AR55	Blue Eye Town, Arkansas	0.0007084713%
AR56	Blue Mountain Town, Arkansas	0.0023457827%
AR57	Bluff City Town, Arkansas	0.0001956131%
AR58	Blytheville City, Arkansas	0.3444881956%
AR59	Bodcaw Town, Arkansas	0.0004892473%
AR60	Bonanza City, Arkansas	0.0271534397%
AR61	Bono City, Arkansas	0.0166311169%
AR62	Boone County, Arkansas	0.6844345049%
AR63	Booneville City, Arkansas	0.2395670446%
AR64	Bradford City, Arkansas	0.0196136795%
AR65	Bradley City, Arkansas	0.0127167093%
AR66	Bradley County, Arkansas	0.0903557767%
AR67	Branch City, Arkansas	0.0001595527%
AR68	Briarcliff City, Arkansas	0.0001841653%
AR69	Brinkley City, Arkansas	0.0788794288%
AR70	Brookland City, Arkansas	0.0336729211%
AR71	Bryant City, Arkansas	1.0536173112%
AR72	Buckner City, Arkansas	0.0065180504%
AR73	Bull Shoals City, Arkansas	0.0692543217%
AR74	Burdette Town, Arkansas	0.0001210597%
AR75	Cabot City, Arkansas	0.9626014299%
AR76	Caddo Valley Town, Arkansas	0.0447599031%
AR77	Caldwell Town, Arkansas	0.0042239256%
AR78	Cale Town, Arkansas	0.0007827384%
AR79	Calhoun County, Arkansas	0.1397959405%
AR80	Calico Rock City, Arkansas	0.0024459503%
AR81	Calion City, Arkansas	0.0029361993%
AR82	Camden City, Arkansas	0.4098542963%
AR83	Cammack Village City, Arkansas	0.0112054660%
AR84	Campbell Station City, Arkansas	0.0043090681%
AR85	Caraway City, Arkansas	0.0225855098%
AR86	Carlisle City, Arkansas	0.1468534652%
AR87	Carroll County, Arkansas	0.5928260605%
AR88	Carthage City, Arkansas	0.0016610654%
AR89	Casa Town, Arkansas	0.0015121018%
AR90	Cash Town, Arkansas	0.0012319187%
AR91	Caulksville Town, Arkansas	0.0006928738%
AR92	Cave City, Arkansas	0.0850463202%
AR93	Cave Springs City, Arkansas	0.0320796835%
AR94	Cedarville City, Arkansas	0.0178802072%
AR95	Centerton City, Arkansas	0.1131077079%
AR96	Central City Town, Arkansas	0.0174268772%
AR97	Charleston City, Arkansas	0.0410054775%
AR98	Cherokee Village City, Arkansas	0.2125413902%
AR99	Cherry Valley City, Arkansas	0.0081466329%

State ID	Qualifying Subdivision	Consolidated State Allocation
AR100	Chester Town, Arkansas	0.0004361585%
AR101	Chicot County, Arkansas	0.2832352637%
AR102	Chidester City, Arkansas	0.0007419559%
AR103	Clarendon City, Arkansas	0.0270484068%
AR104	Clark County, Arkansas	0.3342708117%
AR105	Clarksville City, Arkansas	0.2458837581%
AR106	Clay County, Arkansas	0.0479674136%
AR107	Cleburne County, Arkansas	0.3503158049%
AR108	Cleveland County, Arkansas	0.1143679597%
AR109	Clinton City, Arkansas	0.0824034689%
AR110	Coal Hill City, Arkansas	0.1328713526%
AR111	Colt City, Arkansas	0.0085205444%
AR112	Columbia County, Arkansas	0.0671663991%
AR113	Concord Town, Arkansas	0.0150785188%
AR114	Conway City, Arkansas	2.0922743015%
AR115	Conway County, Arkansas	0.5138971203%
AR116	Corning City, Arkansas	0.0191809554%
AR117	Cotter City, Arkansas	0.0233925747%
AR118	Cotton Plant City, Arkansas	0.0024986099%
AR119	Cove Town, Arkansas	0.0001777260%
AR120	Coy Town, Arkansas	0.0078196572%
AR121	Craighead County, Arkansas	0.9265189050%
AR122	Crawford County, Arkansas	0.9565887967%
AR123	Crawfordsville Town, Arkansas	0.0037229444%
AR124	Crittenden County, Arkansas	0.4864689351%
AR125	Cross County, Arkansas	0.3114968436%
AR126	Crossett City, Arkansas	0.2482926464%
AR127	Cushman City, Arkansas	0.0031235127%
AR128	Daisy Town, Arkansas	0.0019036142%
AR129	Dallas County, Arkansas	0.1170103816%
AR130	Damascus Town, Arkansas	0.0328833141%
AR131	Danville City, Arkansas	0.0554598088%
AR132	Dardanelle City, Arkansas	0.1270318663%
AR133	Datto Town, Arkansas	0.0002041989%
AR134	De Queen City, Arkansas	0.1825177187%
AR135	De Valls Bluff City, Arkansas	0.0153369512%
AR136	Decatur City, Arkansas	0.0461206088%
AR137	Delaplaine Town, Arkansas	0.0012409338%
AR138	Delight City, Arkansas	0.0019036142%
AR139	Dell Town, Arkansas	0.0049627334%
AR140	Denning Town, Arkansas	0.0066893371%
AR141	Dermott City, Arkansas	0.0098811069%
AR142	Des Arc City, Arkansas	0.0461902968%
AR143	Desha County, Arkansas	0.1880442527%
AR144	Dewitt City, Arkansas	0.0561472449%
AR145	Diamond City, Arkansas	0.0067481498%
AR146	Diaz City, Arkansas	0.0144799456%
AR147	Dierks City, Arkansas	0.0109843817%
AR148	Donaldson Town, Arkansas	0.0097288521%

State ID	Qualifying Subdivision	Consolidated State Allocation
AR149	Dover City, Arkansas	0.0357561215%
AR150	Drew County, Arkansas	0.4314342663%
AR151	Dumas City, Arkansas	0.0345209116%
AR152	Dyer City, Arkansas	0.0039248537%
AR153	Dyess Town, Arkansas	0.0004842389%
AR154	Earle City, Arkansas	0.0169920066%
AR155	East Camden Town, Arkansas	0.0077825952%
AR156	Edmondson Town, Arkansas	0.0080664988%
AR157	Egypt Town, Arkansas	0.0007186312%
AR158	El Dorado City, Arkansas	0.7549722601%
AR159	Elaine City, Arkansas	0.0061272536%
AR160	Elkins City, Arkansas	0.0584820092%
AR161	Elm Springs City, Arkansas	0.0169270407%
AR162	Emerson Town, Arkansas	0.0007712907%
AR163	Emmet City, Arkansas	0.0006732695%
AR164	England City, Arkansas	0.1277733929%
AR165	Enola Town, Arkansas	0.0166283981%
AR166	Etowah Town, Arkansas	0.0016945500%
AR167	Eudora City, Arkansas	0.0090127967%
AR168	Eureka Springs City, Arkansas	0.3891361972%
AR169	Evening Shade City, Arkansas	0.0112877465%
AR170	Everton Town, Arkansas	0.0023825585%
AR171	Fairfield Bay City, Arkansas	0.0994183710%
AR172	Fargo Town, Arkansas	0.0003540210%
AR173	Farmington City, Arkansas	0.0908450240%
AR174	Faulkner County, Arkansas	1.0072116540%
AR175	Fayetteville City, Arkansas	2.1103658624%
AR176	Felsenthal Town, Arkansas	0.0017181610%
AR177	Fifty-Six City, Arkansas	0.0004614866%
AR178	Fisher City, Arkansas	0.0019605666%
AR179	Flippin City, Arkansas	0.0956901320%
AR180	Fordyce City, Arkansas	0.0545063561%
AR181	Foreman City, Arkansas	0.0020583016%
AR182	Forrest City, Arkansas	0.2961090931%
AR183	Fort Smith City, Arkansas	3.8434930088%
AR184	Fouke City, Arkansas	0.0054372418%
AR185	Fountain Hill Town, Arkansas	0.0007150537%
AR186	Fountain Lake Town, Arkansas	0.0028270166%
AR187	Fourche Town, Arkansas	0.0009659021%
AR188	Franklin County, Arkansas	0.5981687154%
AR189	Franklin Town, Arkansas	0.0147063245%
AR190	Fredonia (Biscoe) Town, Arkansas	0.0078030580%
AR191	Friendship Town, Arkansas	0.0051302995%
AR192	Fulton County, Arkansas	0.4958178657%
AR193	Fulton Town, Arkansas	0.0066352466%
AR194	Garfield Town, Arkansas	0.0074476060%
AR195	Garland County, Arkansas	1.7334588443%
AR196	Garland Town, Arkansas	0.0002891982%
AR197	Garner Town, Arkansas	0.0077934705%

State ID	Qualifying Subdivision	Consolidated State Allocation
AR198	Gassville City, Arkansas	0.0727563250%
AR199	Gateway Town, Arkansas	0.0062878080%
AR200	Gentry City, Arkansas	0.0904861377%
AR201	Georgetown, Arkansas	0.0040265954%
AR202	Gilbert Town, Arkansas	0.0024831554%
AR203	Gillett City, Arkansas	0.0114616089%
AR204	Gillham Town, Arkansas	0.0013801668%
AR205	Gilmore City, Arkansas	0.0000954454%
AR206	Glenwood City, Arkansas	0.0480021861%
AR207	Goshen Town, Arkansas	0.0031660124%
AR208	Gosnell City, Arkansas	0.0272347186%
AR209	Gould City, Arkansas	0.0171248002%
AR210	Grady City, Arkansas	0.0313103962%
AR211	Grannis City, Arkansas	0.0009242610%
AR212	Grant County, Arkansas	0.2664481715%
AR213	Gravette City, Arkansas	0.0803454535%
AR214	Green Forest City, Arkansas	0.1176088116%
AR215	Greenbrier City, Arkansas	0.0720066419%
AR216	Greene County, Arkansas	0.5298528213%
AR217	Greenland City, Arkansas	0.0237445924%
AR218	Greenway City, Arkansas	0.0004757962%
AR219	Greenwood City, Arkansas	0.2310067194%
AR220	Greers Ferry City, Arkansas	0.0499860774%
AR221	Griffithville Town, Arkansas	0.0045461792%
AR222	Grubbs City, Arkansas	0.0056885194%
AR223	Guion Town, Arkansas	0.0188333737%
AR224	Gum Springs Town, Arkansas	0.0030512489%
AR225	Gurdon City, Arkansas	0.0633258293%
AR226	Guy City, Arkansas	0.0155481618%
AR227	Hackett City, Arkansas	0.0171567108%
AR228	Hamburg City, Arkansas	0.0524650830%
AR229	Hampton City, Arkansas	0.0149258347%
AR230	Hardy City, Arkansas	0.0225704847%
AR231	Harrell Town, Arkansas	0.0015608978%
AR232	Harrisburg City, Arkansas	0.0610374284%
AR233	Harrison City, Arkansas	0.7509041666%
AR234	Hartford City, Arkansas	0.0079703379%
AR235	Hartman City, Arkansas	0.0041808536%
AR236	Haskell City, Arkansas	0.0719017520%
AR237	Hatfield Town, Arkansas	0.0003119506%
AR238	Havana City, Arkansas	0.0028832535%
AR239	Haynes Town, Arkansas	0.0021807923%
AR240	Hazen City, Arkansas	0.0648458015%
AR241	Heber Springs City, Arkansas	0.3767547633%
AR242	Hector Town, Arkansas	0.0046732490%
AR243	Helena-West Helena City, Arkansas	0.1739214762%
AR244	Hempstead County, Arkansas	0.2734659153%
AR245	Hermitage City, Arkansas	0.0121839606%

State ID	Qualifying Subdivision	Consolidated State Allocation
AR246	Hickory Ridge City, Arkansas	0.0037770349%
AR247	Higden Town, Arkansas	0.0085654767%
AR248	Higginson Town, Arkansas	0.0151972889%
AR249	Highfill Town, Arkansas	0.0156011076%
AR250	Highland City, Arkansas	0.0298718460%
AR251	Hindsville Town, Arkansas	0.0033816590%
AR252	Holland City, Arkansas	0.0148864831%
AR253	Holly Grove City, Arkansas	0.0044608936%
AR254	Hope City, Arkansas	0.2248866206%
AR255	Horatio City, Arkansas	0.0029417800%
AR256	Horseshoe Bend City, Arkansas	0.1112109623%
AR257	Horseshoe Lake Town, Arkansas	0.0014319677%
AR258	Hot Spring County, Arkansas	0.4782149797%
AR259	Hot Springs City, Arkansas	3.5617977507%
AR260	Houston Town, Arkansas	0.0052922849%
AR261	Howard County, Arkansas	0.1730249760%
AR262	Hoxie City, Arkansas	0.0120318489%
AR263	Hughes City, Arkansas	0.0113608689%
AR264	Humnoke City, Arkansas	0.0148176536%
AR265	Humphrey City, Arkansas	0.0142685920%
AR266	Hunter Town, Arkansas	0.0001735762%
AR267	Huntington City, Arkansas	0.0062142563%
AR268	Huntsville City, Arkansas	0.0854508543%
AR269	Huttig City, Arkansas	0.0090756161%
AR270	Imboden Town, Arkansas	0.0007621325%
AR271	Independence County, Arkansas	1.0893020276%
AR272	Izard County, Arkansas	0.5513048629%
AR273	Jackson County, Arkansas	0.1817241049%
AR274	Jacksonport Town, Arkansas	0.0050680525%
AR275	Jacksonville City, Arkansas	2.6389305280%
AR276	Jasper City, Arkansas	0.0070526594%
AR277	Jefferson County, Arkansas	0.5992841535%
AR278	Jennette Town, Arkansas	0.0012409338%
AR279	Jericho Town, Arkansas	0.0009641849%
AR281	Johnson City, Arkansas	0.1307711237%
AR282	Johnson County, Arkansas	0.3131687844%
AR283	Joiner City, Arkansas	0.0294738943%
AR284	Jonesboro City, Arkansas	2.1740597362%
AR285	Judsonia City, Arkansas	0.0470208295%
AR286	Junction City, Arkansas	0.0041819983%
AR287	Keiser City, Arkansas	0.0065363668%
AR288	Kensett City, Arkansas	0.0362397881%
AR289	Kibler City, Arkansas	0.0431741065%
AR290	Kingsland City, Arkansas	0.0062036672%
AR291	Knobel City, Arkansas	0.0009218283%
AR292	Knoxville Town, Arkansas	0.0058832739%
AR293	Lafayette County, Arkansas	0.0910619584%
AR294	Lafe Town, Arkansas	0.0028363178%
AR295	Lagrange Town, Arkansas	0.0008239503%

State ID	Qualifying Subdivision	Consolidated State Allocation
AR296	Lake City, Arkansas	0.0259733220%
AR297	Lake View City, Arkansas	0.0047133160%
AR298	Lake Village City, Arkansas	0.0224886334%
AR299	Lakeview City, Arkansas	0.0193402219%
AR300	Lamar City, Arkansas	0.1021685446%
AR301	Lavaca City, Arkansas	0.0302604964%
AR302	Lawrence County, Arkansas	0.4807663922%
AR303	Leachville City, Arkansas	0.0232401768%
AR304	Lead Hill Town, Arkansas	0.0069168607%
AR305	Lee County, Arkansas	0.0989039387%
AR306	Leola Town, Arkansas	0.0013687190%
AR307	Lepanto City, Arkansas	0.0682260295%
AR308	Leslie City, Arkansas	0.0254444370%
AR309	Lewisville City, Arkansas	0.0166148039%
AR310	Lincoln City, Arkansas	0.0464338472%
AR311	Lincoln County, Arkansas	0.1387881111%
AR312	Little Flock City, Arkansas	0.0530723850%
AR313	Little River County, Arkansas	0.3040825791%
AR314	Little Rock City, Arkansas	6.7135694892%
AR315	Lockesburg City, Arkansas	0.0062672021%
AR316	Logan County, Arkansas	0.5058103018%
AR317	London City, Arkansas	0.0142372538%
AR318	Lonoke City, Arkansas	0.2452247983%
AR319	Lonoke County, Arkansas	0.5819398431%
AR320	Louann Town, Arkansas	0.0002119261%
AR321	Luxora City, Arkansas	0.0119226662%
AR322	Lynn Town, Arkansas	0.0001385175%
AR323	Madison City, Arkansas	0.0058260353%
AR324	Madison County, Arkansas	0.3196927018%
AR325	Magazine City, Arkansas	0.0318730520%
AR326	Magness Town, Arkansas	0.0014179443%
AR327	Magnolia City, Arkansas	0.5824169272%
AR328	Malvern City, Arkansas	0.3835695961%
AR329	Mammoth Spring City, Arkansas	0.0072408314%
AR330	Manila City, Arkansas	0.0409124647%
AR331	Mansfield City, Arkansas	0.0007997669%
AR332	Marianna City, Arkansas	0.0846648246%
AR333	Marie Town, Arkansas	0.0009849339%
AR334	Marion City, Arkansas	0.1126915829%
AR335	Marion County, Arkansas	0.3952336867%
AR336	Marked Tree City, Arkansas	0.0992021520%
AR337	Marmaduke City, Arkansas	0.0391761304%
AR338	Marvell City, Arkansas	0.0610375715%
AR339	Maumelle City, Arkansas	0.2572012688%
AR340	Mayflower City, Arkansas	0.0608694329%
AR341	Maynard Town, Arkansas	0.0013140561%
AR342	McCaskill Town, Arkansas	0.0012894435%
AR343	McCrory City, Arkansas	0.0147483949%
AR344	McDougal Town, Arkansas	0.0001189133%

State ID	Qualifying Subdivision	Consolidated State Allocation
AR345	McGehee City, Arkansas	0.0429993856%
AR346	McNab Town, Arkansas	0.0009151028%
AR347	Mcrae City, Arkansas	0.0307843730%
AR348	Melbourne City, Arkansas	0.0687295865%
AR349	Mena City, Arkansas	0.7716866592%
AR350	Menifee Town, Arkansas	0.0106144770%
AR351	Midland Town, Arkansas	0.0002701664%
AR352	Miller County, Arkansas	0.3769094507%
AR353	Mineral Springs City, Arkansas	0.0133569235%
AR354	Minturn Town, Arkansas	0.0002323889%
AR355	Mississippi County, Arkansas	0.4561503415%
AR356	Mitchellville City, Arkansas	0.0000190318%
AR357	Monette City, Arkansas	0.0230987974%
AR358	Monroe County, Arkansas	0.0751267203%
AR359	Montgomery County, Arkansas	0.2264091685%
AR360	Monticello City, Arkansas	0.0526747196%
AR361	Montrose City, Arkansas	0.0059883068%
AR362	Moorefield Town, Arkansas	0.0009616092%
AR363	Moro Town, Arkansas	0.0019858947%
AR364	Morrilton City, Arkansas	0.2597150469%
AR365	Morrison Bluff Town, Arkansas	0.0001732900%
AR366	Mount Ida City, Arkansas	0.0133550632%
AR367	Mount Pleasant Town, Arkansas	0.0122294653%
AR368	Mount Vernon Town, Arkansas	0.0071675659%
AR369	Mountain Home City, Arkansas	0.8447100025%
AR370	Mountain Pine City, Arkansas	0.0111311989%
AR371	Mountainburg City, Arkansas	0.0505877986%
AR372	Mulberry City, Arkansas	0.0839496278%
AR373	Murfreesboro City, Arkansas	0.0401878235%
AR374	Nashville City, Arkansas	0.1174004630%
AR375	Nevada County, Arkansas	0.1042972498%
AR376	Newark City, Arkansas	0.0743959259%
AR377	Newport City, Arkansas	0.2957024125%
AR378	Newton County, Arkansas	0.2538955941%
AR379	Norfork City, Arkansas	0.0071735760%
AR380	Norman Town, Arkansas	0.0054255078%
AR381	Norphlet City, Arkansas	0.0199309247%
AR382	North Little Rock City, Arkansas	1.6145764729%
AR383	Oak Grove Heights Town, Arkansas	0.0108133813%
AR384	Oak Grove Town, Arkansas	0.0031881924%
AR385	Oakhaven Town, Arkansas	0.0008458440%
AR386	Oden Town, Arkansas	0.0002086349%
AR387	Ogden City, Arkansas	0.0000829960%
AR388	Oil Trough Town, Arkansas	0.0018456600%
AR389	O'Kean Town, Arkansas	0.0001714297%
AR390	Okolona Town, Arkansas	0.0019046158%
AR391	Ola City, Arkansas	0.0262882776%
AR392	Omaha Town, Arkansas	0.0030405167%

State ID	Qualifying Subdivision	Consolidated State Allocation
AR393	Oppelo City, Arkansas	0.0090335457%
AR394	Osceola City, Arkansas	0.2492878833%
AR395	Ouachita County, Arkansas	0.2913601460%
AR396	Oxford City, Arkansas	0.0264156336%
AR397	Ozan Town, Arkansas	0.0011369025%
AR398	Ozark City, Arkansas	0.1131238778%
AR399	Palestine City, Arkansas	0.0190803585%
AR400	Pangburn City, Arkansas	0.0157168727%
AR401	Paragould City, Arkansas	1.0056390223%
AR402	Paris City, Arkansas	0.1616167421%
AR403	Parkdale City, Arkansas	0.0007150537%
AR404	Parkin City, Arkansas	0.0145157198%
AR405	Patmos Town, Arkansas	0.0012638292%
AR406	Patterson City, Arkansas	0.0019780244%
AR407	Pea Ridge City, Arkansas	0.1099874863%
AR408	Peach Orchard City, Arkansas	0.0002743162%
AR409	Perla Town, Arkansas	0.0015089537%
AR410	Perry County, Arkansas	0.2411764522%
AR411	Perry Town, Arkansas	0.0054813155%
AR412	Perrytown, Arkansas	0.0014218079%
AR413	Perryville City, Arkansas	0.0413931262%
AR414	Phillips County, Arkansas	0.3245121955%
AR415	Piggott City, Arkansas	0.3895380125%
AR416	Pike County, Arkansas	0.3481536152%
AR417	Pindall Town, Arkansas	0.0030350790%
AR418	Pine Bluff City, Arkansas	0.9840818047%
AR419	Pineville Town, Arkansas	0.0022012551%
AR420	Plainview City, Arkansas	0.0125505741%
AR421	Pleasant Plains Town, Arkansas	0.0024498139%
AR422	Plumerville City, Arkansas	0.0292462276%
AR423	Pocahontas City, Arkansas	0.4671181241%
AR424	Poinsett County, Arkansas	0.4009911787%
AR425	Polk County, Arkansas	0.0691418478%
AR426	Pollard City, Arkansas	0.0004521853%
AR427	Pope County, Arkansas	0.8568421621%
AR428	Portia Town, Arkansas	0.0009455824%
AR429	Portland City, Arkansas	0.0081334680%
AR430	Pottsville City, Arkansas	0.0356473681%
AR431	Powhatan Town, Arkansas	0.0001556891%
AR432	Poyen Town, Arkansas	0.0022812461%
AR433	Prairie County, Arkansas	0.0903177130%
AR434	Prairie Grove City, Arkansas	0.0877670159%
AR435	Prattsville Town, Arkansas	0.0011406231%
AR436	Prescott City, Arkansas	0.0925564594%
AR437	Pulaski County, Arkansas	2.3536109191%
AR438	Pyatt Town, Arkansas	0.0061435666%
AR439	Quitman City, Arkansas	0.0720876345%
AR440	Randolph County, Arkansas	0.0533049170%
AR441	Ratcliff City, Arkansas	0.0038192484%

State ID	Qualifying Subdivision	Consolidated State Allocation
AR442	Ravenden Springs Town, Arkansas	0.0001143342%
AR443	Ravenden Town, Arkansas	0.0021246984%
AR444	Rector City, Arkansas	0.0056501695%
AR445	Redfield City, Arkansas	0.0199888788%
AR446	Reed Town, Arkansas	0.0009294125%
AR447	Reyno City, Arkansas	0.0001714297%
AR448	Rison City, Arkansas	0.0266158258%
AR449	Rockport City, Arkansas	0.0466258829%
AR450	Roe Town, Arkansas	0.0006297682%
AR451	Rogers City, Arkansas	1.7409808606%
AR452	Rondo Town, Arkansas	0.0001282146%
AR453	Rose Bud Town, Arkansas	0.0201332633%
AR454	Rosston Town, Arkansas	0.0012719857%
AR455	Rudy Town, Arkansas	0.0043610122%
AR456	Russell Town, Arkansas	0.0072738867%
AR457	Russellville City, Arkansas	0.9171601007%
AR458	Salem City, Arkansas	0.0044962385%
AR459	Salesville City, Arkansas	0.0064404921%
AR460	Saline County, Arkansas	1.0800200662%
AR461	Scott County, Arkansas	0.3380405487%
AR462	Scranton City, Arkansas	0.0072753177%
AR463	Searcy City, Arkansas	0.9880873649%
AR464	Searcy County, Arkansas	0.2116252857%
AR465	Sebastian County, Arkansas	2.1934833834%
AR466	Sedgwick Town, Arkansas	0.0005311746%
AR467	Sevier County, Arkansas	0.2613059949%
AR468	Shannon Hills City, Arkansas	0.0498163648%
AR469	Sharp County, Arkansas	0.2811885530%
AR470	Sheridan City, Arkansas	0.2276671308%
AR471	Sherrill Town, Arkansas	0.0025761682%
AR472	Sherwood City, Arkansas	0.4241829888%
AR473	Shirley Town, Arkansas	0.0009145304%
AR474	Sidney Town, Arkansas	0.0035774152%
AR475	Siloam Springs City, Arkansas	0.7477783644%
AR476	Smackover City, Arkansas	0.0008007686%
AR477	Smithville Town, Arkansas	0.0001624146%
AR478	South Lead Hill Town, Arkansas	0.0018313504%
AR479	Sparkman City, Arkansas	0.0035065824%
AR480	Springdale City, Arkansas	2.0136786333%
AR481	Springtown, Arkansas	0.0002924895%
AR482	St Francis County, Arkansas	0.2044215163%
AR483	St. Charles Town, Arkansas	0.0024664131%
AR484	St. Francis City, Arkansas	0.0007137659%
AR485	St. Joe Town, Arkansas	0.0076757020%
AR486	St. Paul Town, Arkansas	0.0041619648%
AR487	Stamps City, Arkansas	0.0180207281%
AR488	Star City, Arkansas	0.0564865270%
AR489	Stephens City, Arkansas	0.0116586529%

State ID	Qualifying Subdivision	Consolidated State Allocation
AR490	Stone County, Arkansas	0.2837768844%
AR491	Strawberry Town, Arkansas	0.0006928738%
AR492	Strong City, Arkansas	0.0029361993%
AR493	Stuttgart City, Arkansas	0.2203815101%
AR494	Subiaco Town, Arkansas	0.0109146937%
AR495	Success Town, Arkansas	0.0001784415%
AR496	Sulphur Rock Town, Arkansas	0.0032654646%
AR497	Sulphur Springs City, Arkansas	0.0120908047%
AR498	Summit City, Arkansas	0.0074467474%
AR499	Sunset Town, Arkansas	0.0016041130%
AR500	Swifton City, Arkansas	0.0178930859%
AR501	Taylor City, Arkansas	0.0014103602%
AR502	Texarkana City, Arkansas	0.7683955804%
AR503	Thornton City, Arkansas	0.0022437548%
AR504	Tillar City, Arkansas	0.0003265465%
AR505	Tinsman Town, Arkansas	0.0003150987%
AR506	Tollette Town, Arkansas	0.0032731918%
AR507	Tontitown City, Arkansas	0.0610355681%
AR508	Traskwood City, Arkansas	0.0177678764%
AR509	Trumann City, Arkansas	0.2319945153%
AR510	Tuckerman City, Arkansas	0.0405439909%
AR511	Tull Town, Arkansas	0.0030797252%
AR512	Tupelo Town, Arkansas	0.0005171511%
AR513	Turrell City, Arkansas	0.0090687475%
AR514	Twin Groves Town, Arkansas	0.0156102657%
AR515	Tyronza City, Arkansas	0.0382955139%
AR516	Ulm Town, Arkansas	0.0000897216%
AR517	Union County, Arkansas	0.4520045466%
AR518	Valley Springs Town, Arkansas	0.0032716177%
AR519	Van Buren City, Arkansas	1.7649031789%
AR520	Van Buren County, Arkansas	0.3641848711%
AR521	Vandervoort Town, Arkansas	0.0000659675%
AR522	Victoria Town, Arkansas	0.0005446257%
AR523	Vilonia City, Arkansas	0.1035441323%
AR524	Viola Town, Arkansas	0.0032700437%
AR525	Wabbaseka Town, Arkansas	0.0082530968%
AR526	Waldenburg Town, Arkansas	0.0023526513%
AR527	Waldo City, Arkansas	0.0028426141%
AR528	Waldron City, Arkansas	0.1501465474%
AR529	Walnut Ridge City, Arkansas	0.0315460763%
AR530	Ward City, Arkansas	0.1482609634%
AR531	Warren City, Arkansas	0.1331456688%
AR532	Washington City, Arkansas	0.0014218079%
AR533	Washington County, Arkansas	2.0141562897%
AR534	Watson City, Arkansas	0.0000569524%
AR535	Weiner City, Arkansas	0.0115016760%
AR536	Weldon Town, Arkansas	0.0015514534%
AR537	West Fork City, Arkansas	0.0278779379%
AR538	West Memphis City, Arkansas	0.6402086383%

State ID	Qualifying Subdivision	Consolidated State Allocation
AR539	West Point Town, Arkansas	0.0031173596%
AR540	Western Grove Town, Arkansas	0.0057204300%
AR541	Wheatley City, Arkansas	0.0050976735%
AR542	Whelen Springs Town, Arkansas	0.0002381128%
AR543	White County, Arkansas	0.9979591705%
AR544	White Hall City, Arkansas	0.0551959387%
AR545	Wickes Town, Arkansas	0.0001422380%
AR546	Widener Town, Arkansas	0.0014565804%
AR547	Wiederkehr Village City, Arkansas	0.0015955272%
AR548	Williford Town, Arkansas	0.0025041906%
AR549	Willisville Town, Arkansas	0.0003913692%
AR550	Wilmar City, Arkansas	0.0018078825%
AR551	Wilmot City, Arkansas	0.0171605744%
AR552	Wilson City, Arkansas	0.0038733390%
AR553	Wilton City, Arkansas	0.0002323889%
AR554	Winchester Town, Arkansas	0.0011094280%
AR555	Winslow City, Arkansas	0.0059329284%
AR556	Winthrop City, Arkansas	0.0004315794%
AR557	Woodruff County, Arkansas	0.2136270641%
AR558	Wooster Town, Arkansas	0.0052930004%
AR559	Wrightsville City, Arkansas	0.0089014675%
AR560	Wynne City, Arkansas	0.1541190523%
AR561	Yell County, Arkansas	0.5032932325%
AR562	Yellville City, Arkansas	0.0268081476%
AR563	Zinc Town, Arkansas	0.0018492375%
AR564	Keo Town, Arkansas	0.0137063654%
AR565	Letona Town, Arkansas	0.0096119422%
AR567	Lexa Town, Arkansas	0.0073056542%
AR568	Lonsdale Town, Arkansas	0.0009432928%
AR569	Lowell City, Arkansas	0.2449366017%
AR570	Marshall City, Arkansas	0.0391797079%
AR571	McNeil City, Arkansas	0.0006390694%
AR572	Mountain View City, Arkansas	0.1444262605%
AR573	Nimmons Town, Arkansas	0.0001405209%

State ID	Qualifying Subdivision	Consolidated State Allocation
CA1	Adelanto City, California	
CA2	Agoura Hills City, California	
CA3	Alameda City, California	
CA4	Alameda County, California	
CA5	Albany City, California	
CA6	Alhambra City, California	
CA7	Aliso Viejo City, California	
CA9	Amador County, California	
CA10	American Canyon City, California	
CA11	Anaheim City, California	
CA12	Anderson City, California	
CA13	Antioch City, California	
CA14	Apple Valley Town, California	
CA15	Arcadia City, California	
CA16	Arcata City, California	
CA17	Arroyo Grande City, California	
CA18	Artesia City, California	
CA19	Arvin City, California	
CA20	Atascadero City, California	
CA21	Atwater City, California	
CA22	Auburn City, California	
CA23	Avenal City, California	Allocations in California will be made in accordance with the California State-Subdivision Agreement.
CA24	Azusa City, California	
CA25	Bakersfield City, California	
CA26	Baldwin Park City, California	
CA27	Banning City, California	
CA28	Barstow City, California	
CA29	Beaumont City, California	
CA30	Bell City, California	
CA31	Bell Gardens City, California	
CA32	Bellflower City, California	
CA33	Belmont City, California	
CA34	Benicia City, California	
CA35	Berkeley City, California	
CA36	Beverly Hills City, California	
CA37	Blythe City, California	
CA38	Brawley City, California	
CA39	Brea City, California	
CA40	Brentwood City, California	
CA41	Buena Park City, California	
CA42	Burbank City, California	
CA43	Burlingame City, California	
CA44	Butte County, California	
CA45	Calabasas City, California	
CA46	Calaveras County, California	
CA47	Calexico City, California	
CA48	California City, California	

State ID	Qualifying Subdivision	Consolidated State Allocation
CA49	Camarillo City, California	
CA50	Campbell City, California	
CA51	Canyon Lake City, California	
CA52	Capitola City, California	
CA53	Carlsbad City, California	
CA54	Carpinteria City, California	
CA55	Carson City, California	
CA56	Cathedral City, California	
CA57	Ceres City, California	
CA58	Cerritos City, California	
CA59	Chico City, California	
CA60	Chino City, California	
CA61	Chino Hills City, California	
CA62	Chowchilla City, California	
CA63	Chula Vista City, California	
CA64	Citrus Heights City, California	
CA65	Claremont City, California	
CA66	Clayton City, California	
CA67	Clearlake City, California	
CA68	Clovis City, California	
CA69	Coachella City, California	
CA70	Coalinga City, California	Allocations in California will be made in accordance with the California State-Subdivision Agreement.
CA71	Colton City, California	
CA72	Colusa County, California	
CA73	Commerce City, California	
CA74	Compton City, California	
CA75	Concord City, California	
CA76	Contra Costa County, California	
CA77	Corcoran City, California	
CA78	Corona City, California	
CA79	Coronado City, California	
CA80	Costa Mesa City, California	
CA81	Covina City, California	
CA82	Cudahy City, California	
CA83	Culver City, California	
CA84	Cupertino City, California	
CA85	Cypress City, California	
CA86	Daly City, California	
CA87	Dana Point City, California	
CA88	Danville Town, California	
CA89	Davis City, California	
CA90	Del Norte County, California	
CA91	Delano City, California	
CA92	Desert Hot Springs City, California	
CA93	Diamond Bar City, California	
CA94	Dinuba City, California	
CA95	Dixon City, California	

State ID	Qualifying Subdivision	Consolidated State Allocation
CA96	Downey City, California	
CA97	Duarte City, California	
CA98	Dublin City, California	
CA99	East Palo Alto City, California	
CA100	Eastvale City, California	
CA101	El Cajon City, California	
CA102	El Centro City, California	
CA103	El Cerrito City, California	
CA104	El Dorado County, California	
CA105	El Monte City, California	
CA106	El Paso De Robles (Paso Robles) City, California	
CA107	El Segundo City, California	
CA108	Elk Grove City, California	
CA109	Emeryville City, California	
CA110	Encinitas City, California	
CA111	Escondido City, California	
CA112	Eureka City, California	
CA113	Exeter City, California	
CA114	Fairfield City, California	
CA115	Farmersville City, California	
CA116	Fillmore City, California	Allocations in California will be made in accordance with the California State-Subdivision Agreement.
CA117	Folsom City, California	
CA118	Fontana City, California	
CA119	Fortuna City, California	
CA120	Foster City, California	
CA121	Fountain Valley City, California	
CA122	Fremont City, California	
CA123	Fresno City, California	
CA124	Fresno County, California	
CA125	Fullerton City, California	
CA126	Galt City, California	
CA127	Garden Grove City, California	
CA128	Gardena City, California	
CA129	Gilroy City, California	
CA130	Glendale City, California	
CA131	Glendora City, California	
CA132	Glenn County, California	
CA133	Goleta City, California	
CA134	Grand Terrace City, California	
CA135	Grass Valley City, California	
CA136	Greenfield City, California	
CA137	Grover Beach City, California	
CA138	Half Moon Bay City, California	
CA139	Hanford City, California	
CA140	Hawaiian Gardens City, California	
CA141	Hawthorne City, California	

State ID	Qualifying Subdivision	Consolidated State Allocation
CA142	Hayward City, California	
CA143	Healdsburg City, California	
CA144	Hemet City, California	
CA145	Hercules City, California	
CA146	Hermosa Beach City, California	
CA147	Hesperia City, California	
CA148	Highland City, California	
CA149	Hillsborough Town, California	
CA150	Hollister City, California	
CA151	Humboldt County, California	
CA152	Huntington Beach City, California	
CA153	Huntington Park City, California	
CA154	Imperial Beach City, California	
CA155	Imperial City, California	
CA156	Imperial County, California	
CA157	Indio City, California	
CA158	Inglewood City, California	
CA159	Inyo County, California	
CA160	Irvine City, California	
CA161	Jurupa Valley City, California	
CA162	Kerman City, California	
CA163	Kern County, California	Allocations in California will be made in accordance with the California State-Subdivision Agreement.
CA164	King City, California	
CA165	Kings County, California	
CA166	Kingsburg City, California	
CA167	La Cañada Flintridge City, California	
CA168	La Habra City, California	
CA169	La Mesa City, California	
CA170	La Mirada City, California	
CA171	La Palma City, California	
CA172	La Puente City, California	
CA173	La Quinta City, California	
CA174	La Verne City, California	
CA175	Lafayette City, California	
CA176	Laguna Beach City, California	
CA177	Laguna Hills City, California	
CA178	Laguna Niguel City, California	
CA179	Laguna Woods City, California	
CA180	Lake County, California	
CA181	Lake Elsinore City, California	
CA182	Lake Forest City, California	
CA183	Lakeport City, California	
CA184	Lakewood City, California	
CA185	Lancaster City, California	
CA186	Larkspur City, California	
CA187	Lassen County, California	
CA188	Lathrop City, California	

State ID	Qualifying Subdivision	Consolidated State Allocation
CA189	Lawndale City, California	
CA190	Lemon Grove City, California	
CA191	Lemoore City, California	
CA192	Lincoln City, California	
CA193	Lindsay City, California	
CA194	Livermore City, California	
CA195	Livingston City, California	
CA196	Lodi City, California	
CA197	Loma Linda City, California	
CA198	Lomita City, California	
CA199	Lompoc City, California	
CA200	Long Beach City, California	
CA201	Los Alamitos City, California	
CA202	Los Altos City, California	
CA203	Los Angeles City, California	
CA204	Los Angeles County, California	
CA205	Los Banos City, California	
CA206	Los Gatos Town, California	
CA207	Lynwood City, California	
CA208	Madera City, California	
CA209	Madera County, California	
CA210	Malibu City, California	Allocations in California
CA211	Manhattan Beach City, California	will be made in
CA212	Manteca City, California	accordance with the
CA213	Marin County, California	California State-
CA214	Marina City, California	Subdivision Agreement.
CA215	Mariposa County, California	
CA216	Martinez City, California	
CA217	Marysville City, California	
CA218	Maywood City, California	
CA219	McFarland City, California	
CA220	Mendocino County, California	
CA221	Mendota City, California	
CA222	Menifee City, California	
CA223	Menlo Park City, California	
CA224	Merced City, California	
CA225	Merced County, California	
CA226	Mill Valley City, California	
CA227	Millbrae City, California	
CA228	Milpitas City, California	
CA229	Mission Viejo City, California	
CA230	Modesto City, California	
CA231	Modoc County, California	
CA232	Mono County, California	
CA233	Monrovia City, California	
CA234	Montclair City, California	
CA235	Montebello City, California	

State ID	Qualifying Subdivision	Consolidated State Allocation
CA236	Monterey City, California	
CA237	Monterey County, California	
CA238	Monterey Park City, California	
CA239	Moorpark City, California	
CA240	Moraga Town, California	
CA241	Moreno Valley City, California	
CA242	Morgan Hill City, California	
CA243	Morro Bay City, California	
CA244	Mountain View City, California	
CA245	Murrieta City, California	
CA246	Napa City, California	
CA247	Napa County, California	
CA248	National City, California	
CA249	Nevada County, California	
CA250	Newark City, California	
CA251	Newman City, California	
CA252	Newport Beach City, California	
CA253	Norco City, California	
CA254	Norwalk City, California	
CA255	Novato City, California	
CA256	Oakdale City, California	
CA257	Oakland City, California	Allocations in California will be made in accordance with the California State-Subdivision Agreement.
CA258	Oakley City, California	
CA259	Oceanside City, California	
CA260	Ontario City, California	
CA261	Orange City, California	
CA262	Orange County, California	
CA263	Orange Cove City, California	
CA264	Orinda City, California	
CA265	Oroville City, California	
CA266	Oxnard City, California	
CA267	Pacific Grove City, California	
CA268	Pacifica City, California	
CA269	Palm Desert City, California	
CA270	Palm Springs City, California	
CA271	Palmdale City, California	
CA272	Palo Alto City, California	
CA273	Palos Verdes Estates City, California	
CA274	Paramount City, California	
CA275	Parlier City, California	
CA276	Pasadena City, California	
CA277	Patterson City, California	
CA278	Perris City, California	
CA279	Petaluma City, California	
CA280	Pico Rivera City, California	
CA281	Piedmont City, California	
CA282	Pinole City, California	

State ID	Qualifying Subdivision	Consolidated State Allocation
CA283	Pittsburg City, California	
CA284	Placentia City, California	
CA285	Placer County, California	
CA286	Placerville City, California	
CA287	Pleasant Hill City, California	
CA288	Pleasanton City, California	
CA289	Plumas County, California	
CA290	Pomona City, California	
CA291	Port Hueneme City, California	
CA292	Porterville City, California	
CA293	Poway City, California	
CA294	Rancho Cordova City, California	
CA295	Rancho Cucamonga City, California	
CA296	Rancho Mirage City, California	
CA297	Rancho Palos Verdes City, California	
CA298	Rancho Santa Margarita City, California	
CA299	Red Bluff City, California	
CA300	Redding City, California	
CA301	Redlands City, California	
CA302	Redondo Beach City, California	
CA303	Redwood City, California	Allocations in California
CA304	Reedley City, California	will be made in
CA305	Rialto City, California	accordance with the
CA306	Richmond City, California	California State-
CA307	Ridgecrest City, California	Subdivision Agreement.
CA308	Ripon City, California	
CA309	Riverbank City, California	
CA310	Riverside City, California	
CA311	Riverside County, California	
CA312	Rocklin City, California	
CA313	Rohnert Park City, California	
CA314	Rosemead City, California	
CA315	Roseville City, California	
CA316	Sacramento City, California	
CA317	Sacramento County, California	
CA318	Salinas City, California	
CA319	San Anselmo Town, California	
CA320	San Benito County, California	
CA321	San Bernardino City, California	
CA322	San Bernardino County, California	
CA323	San Bruno City, California	
CA324	San Buenaventura (Ventura) City, California	
CA325	San Carlos City, California	
CA326	San Clemente City, California	
CA327	San Diego City, California	
CA328	San Diego County, California	

State ID	Qualifying Subdivision	Consolidated State Allocation
CA329	San Dimas City, California	
CA330	San Fernando City, California	
CA331	San Francisco City, California	
CA332	San Gabriel City, California	
CA333	San Jacinto City, California	
CA334	San Joaquin County, California	
CA335	San Jose City, California	
CA336	San Juan Capistrano City, California	
CA337	San Leandro City, California	
CA338	San Luis Obispo City, California	
CA339	San Luis Obispo County, California	
CA340	San Marcos City, California	
CA341	San Marino City, California	
CA342	San Mateo City, California	
CA343	San Mateo County, California	
CA344	San Pablo City, California	
CA345	San Rafael City, California	
CA346	San Ramon City, California	
CA347	Sanger City, California	
CA348	Santa Ana City, California	
CA349	Santa Barbara City, California	Allocations in California will be made in accordance with the California State-Subdivision Agreement.
CA350	Santa Barbara County, California	
CA351	Santa Clara City, California	
CA352	Santa Clara County, California	
CA353	Santa Clarita City, California	
CA354	Santa Cruz City, California	
CA355	Santa Cruz County, California	
CA356	Santa Fe Springs City, California	
CA357	Santa Maria City, California	
CA358	Santa Monica City, California	
CA359	Santa Paula City, California	
CA360	Santa Rosa City, California	
CA361	Santee City, California	
CA362	Saratoga City, California	
CA363	Scotts Valley City, California	
CA364	Seal Beach City, California	
CA365	Seaside City, California	
CA366	Selma City, California	
CA367	Shafter City, California	
CA368	Shasta County, California	
CA369	Shasta Lake City, California	
CA371	Sierra Madre City, California	
CA372	Signal Hill City, California	
CA373	Simi Valley City, California	
CA374	Siskiyou County, California	
CA375	Solana Beach City, California	
CA376	Solano County, California	

State ID	Qualifying Subdivision	Consolidated State Allocation
CA377	Soledad City, California	
CA378	Sonoma City, California	
CA379	Sonoma County, California	
CA380	South El Monte City, California	
CA381	South Gate City, California	
CA382	South Lake Tahoe City, California	
CA383	South Pasadena City, California	
CA384	South San Francisco City, California	
CA385	Stanislaus County, California	
CA386	Stanton City, California	
CA387	Stockton City, California	
CA388	Suisun City, California	
CA389	Sunnyvale City, California	
CA390	Susanville City, California	
CA391	Sutter County, California	
CA392	Tehachapi City, California	
CA393	Tehama County, California	
CA394	Temecula City, California	
CA395	Temple City, California	
CA396	Thousand Oaks City, California	
CA397	Torrance City, California	Allocations in California will be made in accordance with the California State-Subdivision Agreement.
CA398	Tracy City, California	
CA399	Trinity County, California	
CA400	Truckee Town, California	
CA401	Tulare City, California	
CA402	Tulare County, California	
CA403	Tuolumne County, California	
CA404	Turlock City, California	
CA405	Tustin City, California	
CA406	Twentynine Palms City, California	
CA407	Ukiah City, California	
CA408	Union City, California	
CA409	Upland City, California	
CA410	Vacaville City, California	
CA411	Vallejo City, California	
CA412	Ventura County, California	
CA413	Victorville City, California	
CA414	Visalia City, California	
CA415	Vista City, California	
CA416	Walnut City, California	
CA417	Walnut Creek City, California	
CA418	Wasco City, California	
CA419	Watsonville City, California	
CA420	West Covina City, California	
CA421	West Hollywood City, California	
CA422	West Sacramento City, California	
CA423	Westminster City, California	

State ID	Qualifying Subdivision	Consolidated State Allocation
CA424	Whittier City, California	Allocations in California will be made in accordance with the California State-Subdivision Agreement.
CA425	Wildomar City, California	
CA426	Windsor Town, California	
CA427	Woodland City, California	
CA428	Yolo County, California	
CA429	Yorba Linda City, California	
CA430	Yuba City, California	
CA431	Yuba County, California	
CA432	Yucaipa City, California	
CA433	Yucca Valley Town, California	

State ID	Qualifying Subdivision	Consolidated State Allocation
CO1	Adams County, Colorado	
CO2	Alamosa City, Colorado	
CO3	Alamosa County, Colorado	
CO4	Arapahoe County, Colorado	
CO5	Archuleta County, Colorado	
CO6	Arvada City, Colorado	
CO7	Aurora City, Colorado	
CO8	Baca County, Colorado	
CO9	Bent County, Colorado	
CO10	Black Hawk City, Colorado	
CO11	Boulder City, Colorado	
CO12	Boulder County, Colorado	
CO13	Brighton City, Colorado	
CO14	Broomfield City, Colorado	
CO15	Cañon City, Colorado	
CO16	Castle Pines City, Colorado	
CO17	Castle Rock Town, Colorado	
CO18	Centennial City, Colorado	
CO19	Chaffee County, Colorado	
CO20	Cheyenne County, Colorado	
CO21	Clear Creek County, Colorado	
CO22	Colorado Springs City, Colorado	Allocations in Colorado will be made in accordance with the Colorado Opioids Settlement Memorandum of Understanding.
CO23	Commerce City, Colorado	
CO24	Conejos County, Colorado	
CO25	Costilla County, Colorado	
CO26	Crowley County, Colorado	
CO27	Custer County, Colorado	
CO28	Delta County, Colorado	
CO29	Denver City, Colorado	
CO30	Dolores County, Colorado	
CO31	Douglas County, Colorado	
CO32	Durango City, Colorado	
CO33	Eagle County, Colorado	
CO34	El Paso County, Colorado	
CO35	Elbert County, Colorado	
CO36	Englewood City, Colorado	
CO37	Erie Town, Colorado	
CO38	Evans City, Colorado	
CO39	Federal Heights City, Colorado	
CO40	Firestone Town, Colorado	
CO41	Fort Collins City, Colorado	
CO42	Fort Morgan City, Colorado	
CO43	Fountain City, Colorado	
CO44	Frederick Town, Colorado	
CO45	Fremont County, Colorado	
CO46	Fruita City, Colorado	
CO47	Garfield County, Colorado	
CO48	Gilpin County, Colorado	
CO49	Golden City, Colorado	

State ID	Qualifying Subdivision	Consolidated State Allocation
CO50	Grand County, Colorado	
CO51	Grand Junction City, Colorado	
CO52	Greeley City, Colorado	
CO53	Greenwood Village City, Colorado	
CO54	Gunnison County, Colorado	
CO55	Hinsdale County, Colorado	
CO56	Hudson Town, Colorado	
CO57	Huerfano County, Colorado	
CO58	Jackson County, Colorado	
CO59	Jefferson County, Colorado	
CO60	Johnstown, Colorado	
CO61	Kiowa County, Colorado	
CO62	Kit Carson County, Colorado	
CO63	La Plata County, Colorado	
CO64	Lafayette City, Colorado	
CO65	Lake County, Colorado	
CO66	Lakewood City, Colorado	
CO67	Larimer County, Colorado	
CO68	Las Animas County, Colorado	
CO69	Lincoln County, Colorado	
CO70	Littleton City, Colorado	
CO71	Logan County, Colorado	Allocations in Colorado will be made in accordance with the Colorado Opioids Settlement Memorandum of Understanding.
CO72	Lone Tree City, Colorado	
CO73	Longmont City, Colorado	
CO74	Louisville City, Colorado	
CO75	Loveland City, Colorado	
CO76	Mesa County, Colorado	
CO77	Mineral County, Colorado	
CO78	Moffat County, Colorado	
CO79	Montezuma County, Colorado	
CO80	Montrose City, Colorado	
CO81	Montrose County, Colorado	
CO82	Morgan County, Colorado	
CO83	Northglenn City, Colorado	
CO84	Otero County, Colorado	
CO85	Ouray County, Colorado	
CO86	Park County, Colorado	
CO87	Parker Town, Colorado	
CO88	Phillips County, Colorado	
CO89	Pitkin County, Colorado	
CO90	Prowers County, Colorado	
CO91	Pueblo City, Colorado	
CO92	Pueblo County, Colorado	
CO93	Rio Blanco County, Colorado	
CO94	Rio Grande County, Colorado	
CO95	Routt County, Colorado	
CO96	Saguache County, Colorado	
CO97	San Juan County, Colorado	
CO98	San Miguel County, Colorado	

State ID	Qualifying Subdivision	Consolidated State Allocation
CO99	Sedgwick County, Colorado	
CO100	Sheridan City, Colorado	
CO101	Steamboat Springs City, Colorado	
CO102	Sterling City, Colorado	
CO103	Summit County, Colorado	
CO104	Superior Town, Colorado	
CO105	Teller County, Colorado	
CO106	Thornton City, Colorado	
CO107	Washington County, Colorado	
CO108	Weld County, Colorado	
CO109	Wellington Town, Colorado	
CO110	Westminster City, Colorado	
CO111	Wheat Ridge City, Colorado	
CO112	Windsor Town, Colorado	
CO113	Yuma County, Colorado	
CO114	Aguilar Town, Colorado	
CO115	Akron Town, Colorado	
CO116	Alma Town, Colorado	
CO117	Antonito Town, Colorado	
CO118	Arriba Town, Colorado	
CO119	Aspen City, Colorado	
CO120	Ault Town, Colorado	Allocations in Colorado will be made in accordance with the Colorado Opioids Settlement Memorandum of Understanding.
CO121	Avon Town, Colorado	
CO122	Basalt Town, Colorado	
CO123	Bayfield Town, Colorado	
CO124	Bennett Town, Colorado	
CO125	Berthoud Town, Colorado	
CO126	Bethune Town, Colorado	
CO127	Blanca Town, Colorado	
CO128	Blue River Town, Colorado	
CO129	Boone Town, Colorado	
CO130	Bow Mar Town, Colorado	
CO131	Branson Town, Colorado	
CO132	Breckenridge Town, Colorado	
CO133	Brookside Town, Colorado	
CO134	Brush City, Colorado	
CO135	Buena Vista Town, Colorado	
CO136	Burlington City, Colorado	
CO137	Calhan Town, Colorado	
CO138	Campo Town, Colorado	
CO139	Carbondale Town, Colorado	
CO140	Cedaredge Town, Colorado	
CO141	Center Town, Colorado	
CO142	Central City, Colorado	
CO143	Cheraw Town, Colorado	
CO144	Cherry Hills Village City, Colorado	
CO145	Cheyenne Wells Town, Colorado	
CO146	City Of Creede Town, Colorado	

State ID	Qualifying Subdivision	Consolidated State Allocation
CO147	Coal Creek Town, Colorado	
CO148	Cokedale Town, Colorado	
CO149	Collbran Town, Colorado	
CO150	Columbine Valley Town, Colorado	
CO151	Cortez City, Colorado	
CO152	Craig City, Colorado	
CO153	Crawford Town, Colorado	
CO154	Crested Butte Town, Colorado	
CO155	Crestone Town, Colorado	
CO156	Cripple Creek City, Colorado	
CO157	Crook Town, Colorado	
CO158	Crowley Town, Colorado	
CO159	Dacono City, Colorado	
CO160	De Beque Town, Colorado	
CO161	Deer Trail Town, Colorado	
CO162	Del Norte Town, Colorado	
CO163	Delta City, Colorado	
CO164	Dillon Town, Colorado	
CO165	Dinosaur Town, Colorado	
CO166	Dolores Town, Colorado	
CO167	Dove Creek Town, Colorado	
CO168	Eads Town, Colorado	Allocations in Colorado will be made in accordance with the Colorado Opioids Settlement Memorandum of Understanding.
CO169	Eagle Town, Colorado	
CO170	Eaton Town, Colorado	
CO171	Eckley Town, Colorado	
CO172	Edgewater City, Colorado	
CO173	Elizabeth Town, Colorado	
CO174	Empire Town, Colorado	
CO175	Estes Park Town, Colorado	
CO176	Fairplay Town, Colorado	
CO177	Flagler Town, Colorado	
CO178	Fleming Town, Colorado	
CO179	Florence City, Colorado	
CO180	Fort Lupton City, Colorado	
CO181	Fowler Town, Colorado	
CO182	Foxfield Town, Colorado	
CO183	Fraser Town, Colorado	
CO184	Frisco Town, Colorado	
CO185	Garden City Town, Colorado	
CO186	Genoa Town, Colorado	
CO187	Georgetown Town, Colorado	
CO188	Gilcrest Town, Colorado	
CO189	Glendale City, Colorado	
CO190	Glenwood Springs City, Colorado	
CO191	Granada Town, Colorado	
CO192	Granby Town, Colorado	
CO193	Grand Lake Town, Colorado	
CO194	Green Mountain Falls Town, Colorado	

State ID	Qualifying Subdivision	Consolidated State Allocation
CO195	Grover Town, Colorado	
CO196	Gunnison City, Colorado	
CO197	Gypsum Town, Colorado	
CO198	Hartman Town, Colorado	
CO199	Haswell Town, Colorado	
CO200	Haxtun Town, Colorado	
CO201	Hayden Town, Colorado	
CO202	Hillrose Town, Colorado	
CO203	Holly Town, Colorado	
CO204	Holyoke City, Colorado	
CO205	Hooper Town, Colorado	
CO206	Hot Sulphur Springs Town, Colorado	
CO207	Hotchkiss Town, Colorado	
CO208	Hugo Town, Colorado	
CO209	Idaho Springs City, Colorado	
CO210	Ignacio Town, Colorado	
CO211	Iliff Town, Colorado	
CO212	Jamestown Town, Colorado	
CO213	Julesburg Town, Colorado	
CO214	Keenesburg Town, Colorado	
CO215	Kersey Town, Colorado	Allocations in Colorado will be made in accordance with the Colorado Opioids Settlement Memorandum of Understanding.
CO216	Kim Town, Colorado	
CO217	Kiowa Town, Colorado	
CO218	Kit Carson Town, Colorado	
CO219	Kremmling Town, Colorado	
CO220	La Jara Town, Colorado	
CO221	La Junta City, Colorado	
CO222	La Salle Town, Colorado	
CO223	La Veta Town, Colorado	
CO224	Lake City Town, Colorado	
CO225	Lakeside Town, Colorado	
CO226	Lamar City, Colorado	
CO227	Larkspur Town, Colorado	
CO228	Las Animas City, Colorado	
CO229	Leadville City, Colorado	
CO230	Limon Town, Colorado	
CO231	Lochbuie Town, Colorado	
CO232	Log Lane Village Town, Colorado	
CO233	Lyons Town, Colorado	
CO234	Manassa Town, Colorado	
CO235	Mancos Town, Colorado	
CO236	Manitou Springs City, Colorado	
CO237	Manzanola Town, Colorado	
CO238	Marble Town, Colorado	
CO239	Mead Town, Colorado	
CO240	Meeker Town, Colorado	
CO241	Merino Town, Colorado	
CO242	Milliken Town, Colorado	

State ID	Qualifying Subdivision	Consolidated State Allocation
CO243	Minturn Town, Colorado	
CO244	Moffat Town, Colorado	
CO245	Monte Vista City, Colorado	
CO246	Montezuma Town, Colorado	
CO247	Monument Town, Colorado	
CO248	Morrison Town, Colorado	
CO249	Mount Crested Butte Town, Colorado	
CO250	Mountain View Town, Colorado	
CO251	Mountain Village Town, Colorado	
CO252	Naturita Town, Colorado	
CO253	Nederland Town, Colorado	
CO254	New Castle Town, Colorado	
CO255	Norwood Town, Colorado	
CO256	Nucla Town, Colorado	
CO257	Nunn Town, Colorado	
CO258	Oak Creek Town, Colorado	
CO259	Olathe Town, Colorado	
CO260	Olney Springs Town, Colorado	
CO261	Ophir Town, Colorado	
CO262	Orchard City Town, Colorado	
CO263	Ordway Town, Colorado	Allocations in Colorado will be made in accordance with the Colorado Opioids Settlement Memorandum of Understanding.
CO264	Otis Town, Colorado	
CO265	Ouray City, Colorado	
CO266	Ovid Town, Colorado	
CO267	Pagosa Springs Town, Colorado	
CO268	Palisade Town, Colorado	
CO269	Palmer Lake Town, Colorado	
CO270	Paoli Town, Colorado	
CO271	Paonia Town, Colorado	
CO272	Parachute Town, Colorado	
CO273	Peetz Town, Colorado	
CO274	Pierce Town, Colorado	
CO275	Pitkin Town, Colorado	
CO276	Platteville Town, Colorado	
CO277	Poncha Springs Town, Colorado	
CO278	Pritchett Town, Colorado	
CO279	Ramah Town, Colorado	
CO280	Rangely Town, Colorado	
CO281	Raymer (New Raymer) Town, Colorado	
CO282	Red Cliff Town, Colorado	
CO283	Rico Town, Colorado	
CO284	Ridgway Town, Colorado	
CO285	Rifle City, Colorado	
CO286	Rockvale Town, Colorado	
CO287	Rocky Ford City, Colorado	
CO288	Romeo Town, Colorado	
CO289	Rye Town, Colorado	

State ID	Qualifying Subdivision	Consolidated State Allocation
CO290	Saguache Town, Colorado	
CO291	Salida City, Colorado	
CO292	San Luis Town, Colorado	
CO293	Sanford Town, Colorado	
CO294	Sawpit Town, Colorado	
CO295	Sedgwick Town, Colorado	
CO296	Seibert Town, Colorado	
CO297	Severance Town, Colorado	
CO298	Sheridan Lake Town, Colorado	
CO299	Silt Town, Colorado	
CO300	Silver Cliff Town, Colorado	
CO301	Silver Plume Town, Colorado	
CO302	Silverthorne Town, Colorado	
CO303	Silverton Town, Colorado	
CO304	Simla Town, Colorado	
CO305	Snowmass Village Town, Colorado	
CO306	South Fork Town, Colorado	
CO307	Springfield Town, Colorado	
CO308	Starkville Town, Colorado	Allocations in Colorado will be made in accordance with the Colorado Opioids Settlement Memorandum of Understanding.
CO309	Stratton Town, Colorado	
CO310	Sugar City Town, Colorado	
CO311	Swink Town, Colorado	
CO312	Telluride Town, Colorado	
CO313	Timnath Town, Colorado	
CO314	Trinidad City, Colorado	
CO315	Two Buttes Town, Colorado	
CO316	Vail Town, Colorado	
CO317	Victor City, Colorado	
CO318	Vilas Town, Colorado	
CO319	Vona Town, Colorado	
CO320	Walden Town, Colorado	
CO321	Walsenburg City, Colorado	
CO322	Walsh Town, Colorado	
CO323	Ward Town, Colorado	
CO324	Westcliffe Town, Colorado	
CO325	Wiggins Town, Colorado	
CO326	Wiley Town, Colorado	
CO327	Williamsburg Town, Colorado	
CO328	Winter Park Town, Colorado	
CO329	Woodland Park City, Colorado	
CO330	Wray City, Colorado	
CO331	Yampa Town, Colorado	
CO332	Yuma City, Colorado	

State ID	Qualifying Subdivision	Consolidated State Allocation
CT1	Andover Town, Connecticut	0.0513214640%
CT2	Ansonia City, Connecticut	0.5316052437%
CT3	Ashford Town, Connecticut	0.1096965130%
CT4	Avon Town, Connecticut	0.5494886534%
CT5	Barkhamsted Town, Connecticut	0.0620629520%
CT6	Beacon Falls Town, Connecticut	0.1953947308%
CT7	Berlin Town, Connecticut	0.5215629385%
CT8	Bethany Town, Connecticut	0.1039156068%
CT9	Bethel Town, Connecticut	0.3522422145%
CT10	Bethlehem Town, Connecticut	0.0078647202%
CT11	Bloomfield Town, Connecticut	0.4888368136%
CT12	Bolton Town, Connecticut	0.1520831395%
CT13	Bozrah Town, Connecticut	0.0582057867%
CT14	Branford Town, Connecticut	0.8903816954%
CT15	Bridgeport City, Connecticut	3.2580743095%
CT16	Bridgewater Town, Connecticut	0.0118125935%
CT17	Bristol City, Connecticut	1.3355768908%
CT18	Brookfield Town, Connecticut	0.3087903124%
CT19	Brooklyn Town, Connecticut	0.1880661562%
CT20	Burlington Town, Connecticut	0.2348761319%
CT21	Canaan Town, Connecticut	0.0343343640%
CT22	Canterbury Town, Connecticut	0.1354310071%
CT23	Canton Town, Connecticut	0.2669011966%
CT24	Chaplin Town, Connecticut	0.0523959290%
CT25	Cheshire Town, Connecticut	0.9783113499%
CT26	Chester Town, Connecticut	0.0772387574%
CT27	Clinton Town, Connecticut	0.5348726093%
CT28	Colchester Town, Connecticut	0.6134395770%
CT29	Colebrook Town, Connecticut	0.0296870114%
CT30	Columbia Town, Connecticut	0.1005666237%
CT31	Cornwall Town, Connecticut	0.0486027928%
CT32	Coventry Town, Connecticut	0.3460011479%
CT33	Cromwell Town, Connecticut	0.4750451453%
CT34	Danbury City, Connecticut	1.1556465907%
CT35	Darien Town, Connecticut	0.6429649345%
CT36	Deep River Town, Connecticut	0.0924563595%
CT37	Derby City, Connecticut	0.3503125449%
CT38	Durham Town, Connecticut	0.0079309232%
CT39	East Granby Town, Connecticut	0.1455975170%
CT40	East Haddam Town, Connecticut	0.3145696377%
CT41	East Hampton Town, Connecticut	0.4637546663%
CT42	East Hartford Town, Connecticut	1.2645454069%
CT43	East Haven Town, Connecticut	0.8590923735%
CT44	East Lyme Town, Connecticut	0.6375826296%
CT45	East Windsor Town, Connecticut	0.2419743793%
CT46	Eastford Town, Connecticut	0.0446651958%
CT47	Easton Town, Connecticut	0.1354961231%
CT48	Ellington Town, Connecticut	0.4010047839%
CT49	Enfield Town, Connecticut	0.9173431190%

State ID	Qualifying Subdivision	Consolidated State Allocation
CT50	Essex Town, Connecticut	0.1431870357%
CT51	Fairfield Town, Connecticut	1.4212308415%
CT52	Farmington Town, Connecticut	0.6572091547%
CT53	Franklin Town, Connecticut	0.0446032416%
CT54	Glastonbury Town, Connecticut	1.0420644550%
CT55	Goshen Town, Connecticut	0.0030464255%
CT56	Granby Town, Connecticut	0.2928405247%
CT57	Greenwich Town, Connecticut	1.5644702467%
CT58	Griswold Town, Connecticut	0.3865570141%
CT59	Groton Town, Connecticut	1.4033874500%
CT60	Guilford Town, Connecticut	0.8399392493%
CT61	Haddam Town, Connecticut	0.0151716553%
CT62	Hamden Town, Connecticut	1.7724359413%
CT63	Hampton Town, Connecticut	0.0429454985%
CT64	Hartford City, Connecticut	5.3268549899%
CT65	Hartland Town, Connecticut	0.0359782738%
CT66	Harwinton Town, Connecticut	0.0126363764%
CT67	Hebron Town, Connecticut	0.1593443254%
CT68	Kent Town, Connecticut	0.0835899976%
CT69	Killingly Town, Connecticut	0.6116898413%
CT70	Killingworth Town, Connecticut	0.2652963170%
CT71	Lebanon Town, Connecticut	0.2746607824%
CT72	Ledyard Town, Connecticut	0.5514380850%
CT73	Lisbon Town, Connecticut	0.1156355161%
CT74	Litchfield Town, Connecticut	0.3481982974%
CT75	Lyme Town, Connecticut	0.0023141411%
CT76	Madison Town, Connecticut	0.7594223560%
CT77	Manchester Town, Connecticut	1.3929765818%
CT78	Mansfield Town, Connecticut	0.3058754037%
CT79	Marlborough Town, Connecticut	0.0766010346%
CT80	Meriden City, Connecticut	1.8508778149%
CT81	Middlebury Town, Connecticut	0.0276033951%
CT82	Middlefield Town, Connecticut	0.0075627554%
CT83	Middletown City, Connecticut	1.5343128975%
CT84	Milford City, Connecticut	1.8215679630%
CT85	Monroe Town, Connecticut	0.4307375445%
CT86	Montville Town, Connecticut	0.5806185940%
CT87	Morris Town, Connecticut	0.0099785725%
CT88	Naugatuck Borough, Connecticut	1.0644527326%
CT89	New Britain City, Connecticut	1.5740557511%
CT90	New Canaan Town, Connecticut	0.6136187204%
CT91	New Fairfield Town, Connecticut	0.2962030448%
CT92	New Hartford Town, Connecticut	0.1323482193%
CT93	New Haven City, Connecticut	5.8061427601%
CT94	New London City, Connecticut	1.0536729060%
CT95	New Milford Town, Connecticut	1.0565475001%
CT96	Newington Town, Connecticut	0.7132456565%
CT97	Newtown, Connecticut	0.5964476353%
CT98	Norfolk Town, Connecticut	0.0442819100%

State ID	Qualifying Subdivision	Consolidated State Allocation
CT99	North Branford Town, Connecticut	0.4795791623%
CT100	North Canaan Town, Connecticut	0.0913148022%
CT101	North Haven Town, Connecticut	0.7922543069%
CT102	North Stonington Town, Connecticut	0.1803885830%
CT103	Norwalk City, Connecticut	1.5918210823%
CT104	Norwich City, Connecticut	1.1639182124%
CT105	Old Lyme Town, Connecticut	0.0247921386%
CT106	Old Saybrook Town, Connecticut	0.4181170767%
CT107	Orange Town, Connecticut	0.3683598812%
CT108	Oxford Town, Connecticut	0.3955127994%
CT109	Plainfield Town, Connecticut	0.5352043161%
CT110	Plainville Town, Connecticut	0.3937549612%
CT111	Plymouth Town, Connecticut	0.4213382978%
CT112	Pomfret Town, Connecticut	0.1174722050%
CT113	Portland Town, Connecticut	0.3205523149%
CT114	Preston Town, Connecticut	0.1319895374%
CT115	Prospect Town, Connecticut	0.3056173107%
CT116	Putnam Town, Connecticut	0.2953254103%
CT117	Redding Town, Connecticut	0.1726435223%
CT118	Ridgefield Town, Connecticut	0.6645173744%
CT119	Rocky Hill Town, Connecticut	0.3929175425%
CT120	Roxbury Town, Connecticut	0.0037924445%
CT121	Salem Town, Connecticut	0.1075219911%
CT122	Salisbury Town, Connecticut	0.1052257347%
CT123	Scotland Town, Connecticut	0.0395212218%
CT124	Seymour Town, Connecticut	0.5301171581%
CT125	Sharon Town, Connecticut	0.0761294123%
CT126	Shelton City, Connecticut	0.5601099879%
CT127	Sherman Town, Connecticut	0.0494382353%
CT128	Simsbury Town, Connecticut	0.6988446241%
CT129	Somers Town, Connecticut	0.2491740063%
CT130	South Windsor Town, Connecticut	0.7310935932%
CT131	Southbury Town, Connecticut	0.0581965974%
CT132	Southington Town, Connecticut	0.9683065927%
CT133	Sprague Town, Connecticut	0.0874709763%
CT134	Stafford Town, Connecticut	0.3388202949%
CT135	Stamford City, Connecticut	2.9070395589%
CT136	Sterling Town, Connecticut	0.0949826467%
CT137	Stonington Town, Connecticut	0.5576891315%
CT138	Stratford Town, Connecticut	0.9155695700%
CT139	Suffield Town, Connecticut	0.3402792315%
CT140	Thomaston Town, Connecticut	0.2664061562%
CT141	Thompson Town, Connecticut	0.2673479187%
CT142	Tolland Town, Connecticut	0.4342020371%
CT143	Torrington City, Connecticut	1.3652460176%
CT144	Trumbull Town, Connecticut	0.7617744403%
CT145	Union Town, Connecticut	0.0153941764%

State ID	Qualifying Subdivision	Consolidated State Allocation
CT146	Vernon Town, Connecticut	0.7027162157%
CT147	Voluntown, Connecticut	0.0733181557%
CT148	Wallingford Town, Connecticut	1.5350353996%
CT149	Warren Town, Connecticut	0.0489758024%
CT150	Washington Town, Connecticut	0.1553517897%
CT151	Waterbury City, Connecticut	4.6192219654%
CT152	Waterford Town, Connecticut	0.7608802056%
CT153	Watertown, Connecticut	0.6868118808%
CT154	West Hartford Town, Connecticut	1.6216697477%
CT155	West Haven City, Connecticut	1.4026972589%
CT156	Westbrook Town, Connecticut	0.2586999280%
CT157	Weston Town, Connecticut	0.3664201329%
CT158	Westport Town, Connecticut	0.8921084083%
CT159	Wethersfield Town, Connecticut	0.6208707168%
CT160	Willington Town, Connecticut	0.0975268185%
CT161	Wilton Town, Connecticut	0.6378099925%
CT162	Winchester Town, Connecticut	0.3760305376%
CT163	Windham Town, Connecticut	1.0108949901%
CT164	Windsor Locks Town, Connecticut	0.3174167624%
CT165	Windsor Town, Connecticut	0.7548324123%
CT166	Wolcott Town, Connecticut	0.5443693820%
CT167	Woodbridge Town, Connecticut	0.2435300513%
CT168	Woodbury Town, Connecticut	0.3411988605%
CT169	Woodmont Borough, Connecticut	0.0173159412%
CT170	Woodstock Town, Connecticut	0.1817110623%

State ID	Qualifying Subdivision	Consolidated State Allocation
DE1	Dover City, Delaware	25.00000000% ($1.00)
DE2	Kent County, Delaware	25.00000000% ($1.00)
DE3	Middletown, Delaware	0.0000000000%
DE4	Milford City, Delaware	0.0000000000%
DE5	New Castle County, Delaware	0.0000000000%
DE6	Newark City, Delaware	0.0000000000%
DE7	Seaford City, Delaware	25.00000000% ($1.00)
DE8	Smyrna Town, Delaware	0.0000000000%
DE9	Sussex County, Delaware	25.00000000% ($1.00)
DE10	Wilmington City, Delaware	0.0000000000%

State ID	Qualifying Subdivision	Consolidated State Allocation
GA1	Acworth City, Georgia	0.1010066057%
GA2	Adel City, Georgia	0.0545649432%
GA3	Albany City, Georgia	0.3157843012%
GA4	Alma City, Georgia	0.0720108615%
GA5	Alpharetta City, Georgia	0.2110377863%
GA6	Americus City, Georgia	0.0651732444%
GA7	Appling County, Georgia	0.1891925647%
GA8	Arlington City, Georgia	0.0057755147%
GA9	Athens-Clarke County Unified Government, Georgia	1.3856330305%
GA10	Atkinson County, Georgia	0.0986720780%
GA11	Atlanta City, Georgia	2.9922320659%
GA12	Augusta-Richmond County Consolidated Government, Georgia	2.7761021713%
GA13	Bacon County, Georgia	0.1326313298%
GA14	Bainbridge City, Georgia	0.0569861790%
GA15	Baker County, Georgia	0.0138992540%
GA16	Baldwin County, Georgia	0.2940093402%
GA17	Banks County, Georgia	0.2108287241%
GA18	Barrow County, Georgia	0.7562315570%
GA19	Bartow County, Georgia	1.0945235112%
GA20	Ben Hill County, Georgia	0.0834031458%
GA21	Berrien County, Georgia	0.1225733642%
GA22	Blackshear City, Georgia	0.0349161927%
GA23	Blakely City, Georgia	0.0158441397%
GA24	Bleckley County, Georgia	0.1430561858%
GA25	Brantley County, Georgia	0.2875410777%
GA26	Braselton Town, Georgia	0.0371467624%
GA27	Brookhaven City, Georgia	0.0913450445%
GA28	Brooks County, Georgia	0.1455943886%
GA29	Brunswick City, Georgia	0.1020085339%
GA30	Bryan County, Georgia	0.2289883650%
GA31	Buford City, Georgia	0.0023586547%
GA32	Bulloch County, Georgia	0.4088475182%
GA33	Burke County, Georgia	0.1875413288%
GA34	Butts County, Georgia	0.3178860983%
GA35	Calhoun City, Georgia	0.1780085402%
GA36	Calhoun County, Georgia	0.0360783561%
GA37	Camden County, Georgia	0.3387009665%
GA38	Candler County, Georgia	0.0990882539%
GA39	Canton City, Georgia	0.1378274535%
GA40	Carroll County, Georgia	1.4108548814%
GA41	Carrollton City, Georgia	0.4395018339%
GA42	Cartersville City, Georgia	0.2991406477%
GA43	Catoosa County, Georgia	1.0548339612%
GA44	Chamblee City, Georgia	0.0537051979%
GA45	Charlton County, Georgia	0.1046313818%
GA46	Chatham County, Georgia	1.4544033708%

State ID	Qualifying Subdivision	Consolidated State Allocation
GA47	Chattooga County, Georgia	0.3317513109%
GA48	Cherokee County, Georgia	2.1190683851%
GA49	Clarkston City, Georgia	0.0175253481%
GA50	Clay County, Georgia	0.0274637104%
GA51	Clayton County, Georgia	1.6728881377%
GA52	Clinch County, Georgia	0.0617206810%
GA53	Cobb County, Georgia	5.8580801967%
GA54	Coffee County, Georgia	0.4164755944%
GA55	College Park City, Georgia	0.1805996391%
GA56	Colquitt County, Georgia	0.2578612394%
GA57	Columbia County, Georgia	1.2905730633%
GA58	Columbus City, Georgia	1.8227140298%
GA59	Conyers City, Georgia	0.1202231912%
GA60	Cook County, Georgia	0.0973405674%
GA61	Cordele City, Georgia	0.0583989534%
GA62	Covington City, Georgia	0.1969084378%
GA63	Coweta County, Georgia	0.9767276305%
GA64	Crawford County, Georgia	0.1282569558%
GA65	Crisp County, Georgia	0.1296658905%
GA66	Cusseta-Chattahoochee County Unified Government, Georgia	0.0695538650%
GA67	Dade County, Georgia	0.1799465490%
GA68	Dallas City, Georgia	0.0916776643%
GA69	Dalton City, Georgia	0.3628092518%
GA70	Damascus City, Georgia	0.0005040301%
GA71	Dawson City, Georgia	0.0138696254%
GA72	Dawson County, Georgia	0.3192782415%
GA73	Decatur City, Georgia	0.1040340531%
GA74	Decatur County, Georgia	0.1633371087%
GA75	Dekalb County, Georgia	4.0579602979%
GA76	Demorest City, Georgia	0.0233539880%
GA77	Dodge County, Georgia	0.3228398634%
GA78	Dooly County, Georgia	0.0758970226%
GA79	Doraville City, Georgia	0.0619484258%
GA80	Dougherty County, Georgia	0.4519146718%
GA81	Douglas City, Georgia	0.2364366638%
GA82	Douglas County, Georgia	1.2411219485%
GA83	Douglasville City, Georgia	0.2313289102%
GA84	Dublin City, Georgia	0.1598683843%
GA85	Duluth City, Georgia	0.1174400509%
GA86	Dunwoody City, Georgia	0.0823645400%
GA87	Early County, Georgia	0.0433467628%
GA88	East Point City, Georgia	0.2308433908%
GA89	Echols County, Georgia	0.0262187359%
GA90	Effingham County, Georgia	0.4370293068%
GA91	Elbert County, Georgia	0.2655117233%
GA92	Emanuel County, Georgia	0.2278497555%
GA93	Evans County, Georgia	0.1156959749%
GA94	Fairburn City, Georgia	0.0542552469%

State ID	Qualifying Subdivision	Consolidated State Allocation
GA95	Fannin County, Georgia	0.5651805280%
GA96	Fayette County, Georgia	0.6527012475%
GA97	Fayetteville City, Georgia	0.1201203794%
GA98	Fitzgerald City, Georgia	0.0569093853%
GA99	Floyd County, Georgia	0.9887350092%
GA100	Forest Park City, Georgia	0.1455200592%
GA101	Forsyth County, Georgia	1.7110664570%
GA102	Franklin County, Georgia	0.5550296650%
GA103	Fulton County, Georgia	3.2792330120%
GA104	Gainesville City, Georgia	0.3640437388%
GA105	Georgetown-Quitman County Unified Government, Georgia	0.0176595651%
GA106	Gilmer County, Georgia	0.4239021158%
GA107	Glascock County, Georgia	0.0283662653%
GA108	Glynn County, Georgia	0.7968809706%
GA109	Gordon County, Georgia	0.4175279543%
GA110	Grady County, Georgia	0.1716497947%
GA111	Greene County, Georgia	0.1737385827%
GA112	Griffin City, Georgia	0.2287480123%
GA113	Grovetown City, Georgia	0.0632622854%
GA114	Gwinnett County, Georgia	4.8912732775%
GA115	Habersham County, Georgia	0.4635124652%
GA116	Hall County, Georgia	1.5772937095%
GA117	Hancock County, Georgia	0.0536800967%
GA118	Haralson County, Georgia	1.0934912667%
GA119	Harris County, Georgia	0.2037540782%
GA120	Hart County, Georgia	0.2935398099%
GA121	Heard County, Georgia	0.1232058232%
GA122	Henry County, Georgia	1.9715208583%
GA123	Hinesville City, Georgia	0.2572364025%
GA124	Holly Springs City, Georgia	0.0823108417%
GA125	Houston County, Georgia	0.8378076437%
GA126	Irwin County, Georgia	0.0610553841%
GA127	Jackson County, Georgia	0.9201220386%
GA128	Jasper County, Georgia	0.1152245534%
GA129	Jeff Davis County, Georgia	0.3659791686%
GA130	Jefferson City, Georgia	0.0881783943%
GA131	Jefferson County, Georgia	0.1517559349%
GA132	Jenkins County, Georgia	0.0808740550%
GA133	Johns Creek City, Georgia	0.1877697040%
GA134	Johnson County, Georgia	0.0876584323%
GA135	Jones County, Georgia	0.2773521617%
GA136	Kennesaw City, Georgia	0.1446191663%
GA137	Kingsland City, Georgia	0.1313198199%
GA138	Lagrange City, Georgia	0.2069622772%
GA139	Lakeland City, Georgia	0.0155232109%
GA140	Lamar County, Georgia	0.2083015245%
GA141	Lanier County, Georgia	0.0574613256%
GA142	Laurens County, Georgia	0.5249834521%

State ID	Qualifying Subdivision	Consolidated State Allocation
GA143	Lawrenceville City, Georgia	0.1647173317%
GA144	Lee County, Georgia	0.2162850866%
GA145	Liberty County, Georgia	0.2931642086%
GA146	Lilburn City, Georgia	0.0538355752%
GA147	Lincoln County, Georgia	0.1000487479%
GA148	Loganville City, Georgia	0.1468681321%
GA149	Long County, Georgia	0.1216766548%
GA150	Lowndes County, Georgia	0.6253829866%
GA151	Lumpkin County, Georgia	0.3139555802%
GA152	Macon County, Georgia	0.1110857755%
GA153	Macon-Bibb County Unified Government, Georgia	2.0265214623%
GA154	Madison County, Georgia	0.5114434091%
GA155	Marietta City, Georgia	0.7354006996%
GA156	Marion County, Georgia	0.0615218771%
GA157	McDonough City, Georgia	0.0803644086%
GA158	McDuffie County, Georgia	0.2216409869%
GA159	McIntosh County, Georgia	0.1678759014%
GA160	Meriwether County, Georgia	0.2015834534%
GA161	Milledgeville City, Georgia	0.1343842887%
GA162	Miller County, Georgia	0.0562389307%
GA163	Milton City, Georgia	0.0765630644%
GA164	Mitchell County, Georgia	0.1842864232%
GA165	Monroe City, Georgia	0.1616058698%
GA166	Monroe County, Georgia	0.2463868890%
GA167	Montgomery County, Georgia	0.0685440855%
GA168	Morgan County, Georgia	0.1807932852%
GA169	Moultrie City, Georgia	0.1150272968%
GA170	Murray County, Georgia	0.5636808736%
GA171	Nashville City, Georgia	0.0288042758%
GA172	Newnan City, Georgia	0.2037973462%
GA173	Newton County, Georgia	0.6206699754%
GA174	Norcross City, Georgia	0.0762036242%
GA175	Oconee County, Georgia	0.2721000475%
GA176	Oglethorpe County, Georgia	0.1461658711%
GA177	Paulding County, Georgia	1.7495211188%
GA178	Peach County, Georgia	0.2319656673%
GA179	Peachtree City, Georgia	0.2219833492%
GA180	Peachtree Corners City, Georgia	0.2099400952%
GA181	Perry City, Georgia	0.0954580908%
GA182	Pickens County, Georgia	0.3905362384%
GA183	Pierce County, Georgia	0.2012068205%
GA184	Pike County, Georgia	0.1072270653%
GA185	Polk County, Georgia	0.7130941429%
GA186	Pooler City, Georgia	0.0516303360%
GA187	Powder Springs City, Georgia	0.0633430906%
GA188	Pulaski County, Georgia	0.1671565625%
GA189	Putnam County, Georgia	0.2061208707%
GA190	Rabun County, Georgia	0.3170130000%

State ID	Qualifying Subdivision	Consolidated State Allocation
GA191	Randolph County, Georgia	0.0382245100%
GA192	Richmond Hill City, Georgia	0.0716382402%
GA193	Riverdale City, Georgia	0.0684460876%
GA194	Rockdale County, Georgia	0.7947696030%
GA195	Rome City, Georgia	0.3719383578%
GA196	Roswell City, Georgia	0.2174642134%
GA197	Sandy Springs City, Georgia	0.2590143480%
GA198	Savannah City, Georgia	1.1246685243%
GA199	Schley County, Georgia	0.0238356678%
GA200	Screven County, Georgia	0.1132053955%
GA201	Seminole County, Georgia	0.0804817769%
GA202	Smyrna City, Georgia	0.2661908888%
GA203	Snellville City, Georgia	0.0758688840%
GA204	Spalding County, Georgia	0.5900646014%
GA205	Springfield City, Georgia	0.0124802329%
GA206	St. Marys City, Georgia	0.0962803562%
GA207	Statesboro City, Georgia	0.1844690660%
GA208	Stephens County, Georgia	0.7520555284%
GA209	Stewart County, Georgia	0.0419742764%
GA210	Stockbridge City, Georgia	0.0302698888%
GA211	Sugar Hill City, Georgia	0.0106058369%
GA212	Sumter County, Georgia	0.1314426325%
GA213	Suwanee City, Georgia	0.0700562332%
GA214	Talbot County, Georgia	0.0410357316%
GA215	Taliaferro County, Georgia	0.0068637499%
GA216	Tattnall County, Georgia	0.2930768128%
GA217	Taylor County, Georgia	0.0819435502%
GA218	Telfair County, Georgia	0.1855378735%
GA219	Terrell County, Georgia	0.0334710962%
GA220	Thomas County, Georgia	0.2077911904%
GA221	Thomasville City, Georgia	0.1281973547%
GA222	Tift County, Georgia	0.2088288220%
GA223	Tifton City, Georgia	0.1416502311%
GA224	Toombs County, Georgia	0.2423104056%
GA225	Towns County, Georgia	0.2454408368%
GA226	Treutlen County, Georgia	0.0571447522%
GA227	Troup County, Georgia	0.4334095739%
GA228	Tucker City, Georgia	0.0615225648%
GA229	Turner County, Georgia	0.0490657711%
GA230	Twiggs County, Georgia	0.0640416265%
GA231	Union City, Georgia	0.1531538090%
GA232	Union County, Georgia	0.2949759089%
GA233	Upson County, Georgia	0.3355566667%
GA234	Valdosta City, Georgia	0.2598246932%
GA235	Vidalia City, Georgia	0.1252530050%
GA236	Villa Rica City, Georgia	0.1397113628%
GA237	Walker County, Georgia	0.8453605309%
GA238	Walton County, Georgia	0.8194381956%
GA239	Ware County, Georgia	0.5170078559%

State ID	Qualifying Subdivision	Consolidated State Allocation
GA240	Warner Robins City, Georgia	0.3969845574%
GA241	Warren County, Georgia	0.0447828045%
GA242	Warwick City, Georgia	0.0103298381%
GA243	Washington County, Georgia	0.1959988913%
GA244	Waycross City, Georgia	0.1358274367%
GA245	Wayne County, Georgia	0.6609347902%
GA246	Webster County Unified Government, Georgia	0.0143656323%
GA247	Wheeler County, Georgia	0.0675300652%
GA248	White County, Georgia	0.3873386988%
GA249	Whitfield County, Georgia	0.7644288806%
GA250	Wilcox County, Georgia	0.0828696590%
GA251	Wilkes County, Georgia	0.0976306068%
GA252	Wilkinson County, Georgia	0.0847297279%
GA253	Winder City, Georgia	0.2007720766%
GA254	Woodbury City, Georgia	0.0085236394%
GA255	Woodstock City, Georgia	0.1942956763%
GA256	Worth County, Georgia	0.1491832321%
GA257	Rincon town, Georgia	0.0275488139%
GA258	South Fulton City, Georgia	0.2561412300%
GA259	Stonecrest City, Georgia	0.0904388800%
GA260	Ashburn City, Georgia	0.0207294209%
GA261	Chatsworth City, Georgia	0.1226056863%
GA262	Dawsonville City, Georgia	0.0022440946%
GA263	Helen City, Georgia	0.0478552392%
GA264	Jackson City, Georgia	0.0568159148%
GA265	Ringgold City, Georgia	0.0585728853%

State ID	Qualifying Subdivision	Consolidated State Allocation
HI1	Hawaii County, Hawaii	18.2671692501%
HI2	Kalawao, Hawaii	0.0034501514%
HI3	Kauai County, Hawaii	5.7006273580%
HI4	Maui County, Hawaii	13.9979969296%
HI5	City and County of Honolulu, Hawaii	62.0307563109%

State ID	Qualifying Subdivision	Consolidated State Allocation
ID1	Ada County, Idaho	13.2776278333%
ID2	Adams County, Idaho	0.1446831902%
ID3	Ammon City, Idaho	0.0812916024%
ID4	Bannock County, Idaho	3.0595589832%
ID5	Bear Lake County, Idaho	0.6082712041%
ID6	Benewah County, Idaho	0.6526829809%
ID7	Bingham County, Idaho	1.6421270812%
ID8	Blackfoot City, Idaho	0.6283857401%
ID9	Blaine County, Idaho	0.9137717551%
ID10	Boise City, Idaho	12.7586409110%
ID11	Boise County, Idaho	0.3309644652%
ID12	Bonner County, Idaho	2.5987361786%
ID13	Bonneville County, Idaho	3.7761253875%
ID14	Boundary County, Idaho	0.8788284447%
ID15	Burley City, Idaho	0.4485975363%
ID16	Butte County, Idaho	0.1839745518%
ID17	Caldwell City, Idaho	1.1958553249%
ID18	Camas County, Idaho	0.0422073443%
ID19	Canyon County, Idaho	5.0120113688%
ID20	Caribou County, Idaho	0.4396183832%
ID21	Cassia County, Idaho	0.7270235866%
ID22	Chubbuck City, Idaho	0.4841935447%
ID23	Clark County, Idaho	0.0420924425%
ID24	Clearwater County, Idaho	0.4890418390%
ID25	Coeur D'Alene City, Idaho	2.7593778237%
ID26	Custer County, Idaho	0.2133243878%
ID27	Eagle City, Idaho	0.1711876661%
ID28	Elmore County, Idaho	0.8899512165%
ID29	Franklin County, Idaho	0.5753624958%
ID30	Fremont County, Idaho	0.5716071696%
ID31	Garden City, Idaho	0.5582782838%
ID32	Gem County, Idaho	1.3784025725%
ID33	Gooding County, Idaho	0.6966472013%
ID34	Hayden City, Idaho	0.0047132146%
ID35	Idaho County, Idaho	0.8474305547%
ID36	Idaho Falls City, Idaho	3.8875027578%
ID37	Jefferson County, Idaho	0.9842670749%
ID38	Jerome City, Idaho	0.4169017424%
ID39	Jerome County, Idaho	0.6223444291%
ID40	Kootenai County, Idaho	5.6394798565%
ID41	Kuna City, Idaho	0.1849461724%
ID42	Latah County, Idaho	1.2943861166%
ID43	Lemhi County, Idaho	0.4880814284%
ID44	Lewis County, Idaho	0.2882543555%
ID45	Lewiston City, Idaho	2.0176549375%
ID46	Lincoln County, Idaho	0.1930184422%
ID47	Madison County, Idaho	1.2748404845%
ID48	Meridian City, Idaho	2.4045650754%
ID49	Minidoka County, Idaho	0.9140620922%

State ID	Qualifying Subdivision	Consolidated State Allocation
ID50	Moscow City, Idaho	0.6590552650%
ID51	Mountain Home City, Idaho	0.5706694591%
ID52	Nampa City, Idaho	3.3274647954%
ID53	Nez Perce County, Idaho	1.2765833482%
ID54	Oneida County, Idaho	0.2371656647%
ID55	Owyhee County, Idaho	0.5554298409%
ID56	Payette County, Idaho	1.2750728102%
ID57	Pocatello City, Idaho	2.9494898116%
ID58	Post Falls City, Idaho	0.6781328826%
ID59	Power County, Idaho	0.3505171035%
ID60	Preston City, Idaho	0.1496220047%
ID61	Rexburg City, Idaho	0.1336231941%
ID62	Shoshone County, Idaho	1.2841091340%
ID63	Star City, Idaho	0.0001322772%
ID64	Teton County, Idaho	0.4258195211%
ID65	Twin Falls City, Idaho	1.8245765222%
ID66	Twin Falls County, Idaho	3.3104301873%
ID67	Valley County, Idaho	0.8074710814%
ID68	Washington County, Idaho	0.4917358652%

State ID	Qualifying Subdivision	Consolidated State Allocation
IL1	Adams County, Illinois	
IL3	Addison Village, Illinois	
IL4	Alexander County, Illinois	
IL6	Algonquin Village, Illinois	
IL10	Anna City, Illinois	
IL13	Arlington Heights Village, Illinois	
IL14	Aurora City, Illinois	
IL19	Bartlett Village, Illinois	
IL22	Bedford Park Village, Illinois	
IL23	Belleville City, Illinois	
IL24	Bellwood Village, Illinois	
IL27	Bensenville Village, Illinois	
IL28	Benton City, Illinois	
IL30	Berkeley Village, Illinois	
IL31	Berwyn City, Illinois	
IL37	Bloomington City, Illinois	
IL39	Bolingbrook Village, Illinois	
IL40	Bond County, Illinois	
IL41	Boone County, Illinois	
IL46	Bridgeview Village, Illinois	
IL47	Broadview Village, Illinois	
IL49	Brown County, Illinois	Allocations in Illinois will be made in accordance with the Illinois Opioid Allocation Agreement.
IL51	Buffalo Grove Village, Illinois	
IL52	Burbank City, Illinois	
IL53	Bureau County, Illinois	
IL56	Calhoun County, Illinois	
IL57	Calumet City, Illinois	
IL63	Carbondale City, Illinois	
IL65	Carol Stream Village, Illinois	
IL66	Carpentersville Village, Illinois	
IL67	Carroll County, Illinois	
IL70	Cass County, Illinois	
IL75	Champaign City, Illinois	
IL76	Champaign County, Illinois	
IL84	Chicago City, Illinois	
IL85	Chicago Heights City, Illinois	
IL86	Chicago Ridge Village, Illinois	
IL87	Christian County, Illinois	
IL88	Clark County, Illinois	
IL89	Clay County, Illinois	
IL90	Clinton County, Illinois	
IL91	Coles County, Illinois	
IL96	Cook County, Illinois	
IL99	Countryside City, Illinois	
IL100	Crawford County, Illinois	
IL104	Crystal Lake City, Illinois	
IL106	Cumberland County, Illinois	

State ID	Qualifying Subdivision	Consolidated State Allocation
IL107	Danville City, Illinois	
IL110	De Witt County, Illinois	
IL111	Decatur City, Illinois	
IL114	Dekalb City, Illinois	
IL115	Dekalb County, Illinois	
IL117	Des Plaines City, Illinois	
IL120	Dolton Village, Illinois	
IL122	Douglas County, Illinois	
IL125	Downers Grove Village, Illinois	
IL127	Dupage County, Illinois	
IL131	Edgar County, Illinois	
IL132	Edwards County, Illinois	
IL136	Effingham County, Illinois	
IL138	Elgin City, Illinois	
IL141	Elk Grove Village, Illinois	
IL142	Elmhurst City, Illinois	
IL144	Evanston City, Illinois	
IL145	Evergreen Park Village, Illinois	
IL147	Fayette County, Illinois	
IL150	Ford County, Illinois	
IL151	Forest Park Village, Illinois	
IL155	Franklin County, Illinois	Allocations in Illinois will be made in accordance with the Illinois Opioid Allocation Agreement.
IL156	Franklin Park Village, Illinois	
IL160	Fulton County, Illinois	
IL162	Galesburg City, Illinois	
IL163	Gallatin County, Illinois	
IL168	Glendale Heights Village, Illinois	
IL169	Glenview Village, Illinois	
IL174	Granite City, Illinois	
IL177	Greene County, Illinois	
IL180	Grundy County, Illinois	
IL181	Gurnee Village, Illinois	
IL182	Hamilton County, Illinois	
IL183	Hancock County, Illinois	
IL184	Hanover Park Village, Illinois	
IL186	Hardin County, Illinois	
IL188	Harrisburg City, Illinois	
IL190	Harvey City, Illinois	
IL191	Harwood Heights Village, Illinois	
IL193	Henderson County, Illinois	
IL194	Henry County, Illinois	
IL195	Herrin City, Illinois	
IL199	Hillside Village, Illinois	
IL201	Hodgkins Village, Illinois	
IL202	Hoffman Estates Village, Illinois	
IL206	Iroquois County, Illinois	
IL207	Jackson County, Illinois	

State ID	Qualifying Subdivision	Consolidated State Allocation
IL210	Jasper County, Illinois	
IL211	Jefferson County, Illinois	
IL212	Jersey County, Illinois	
IL213	Jo Daviess County, Illinois	
IL214	Johnson County, Illinois	
IL215	Joliet City, Illinois	
IL218	Kane County, Illinois	
IL219	Kankakee City, Illinois	
IL220	Kankakee County, Illinois	
IL222	Kendall County, Illinois	
IL224	Knox County, Illinois	
IL225	La Grange Park Village, Illinois	
IL227	Lake County, Illinois	
IL233	Lasalle County, Illinois	
IL234	Lawrence County, Illinois	
IL235	Lee County, Illinois	
IL247	Livingston County, Illinois	
IL250	Logan County, Illinois	
IL251	Lombard Village, Illinois	
IL254	Lyons Township, Illinois	
IL255	Lyons Village, Illinois	
IL259	Macon County, Illinois	Allocations in Illinois will be made in accordance with the Illinois Opioid Allocation Agreement.
IL260	Macoupin County, Illinois	
IL261	Madison County, Illinois	
IL266	Marion City, Illinois	
IL267	Marion County, Illinois	
IL269	Marshall County, Illinois	
IL270	Mason County, Illinois	
IL271	Massac County, Illinois	
IL275	Maywood Village, Illinois	
IL276	McCook Village, Illinois	
IL277	McDonough County, Illinois	
IL279	McHenry County, Illinois	
IL281	McLean County, Illinois	
IL283	Melrose Park Village, Illinois	
IL284	Menard County, Illinois	
IL285	Mercer County, Illinois	
IL286	Merrionette Park Village, Illinois	
IL287	Metropolis City, Illinois	
IL292	Moline City, Illinois	
IL295	Monroe County, Illinois	
IL296	Montgomery County, Illinois	
IL299	Morgan County, Illinois	
IL304	Moultrie County, Illinois	
IL305	Mount Prospect Village, Illinois	
IL307	Mundelein Village, Illinois	
IL309	Naperville City, Illinois	

State ID	Qualifying Subdivision	Consolidated State Allocation
IL317	Normal Town, Illinois	
IL322	North Riverside Village, Illinois	
IL323	Northbrook Village, Illinois	
IL325	Northlake City, Illinois	
IL329	Oak Lawn Village, Illinois	
IL331	Oak Park Village, Illinois	
IL333	Ogle County, Illinois	
IL334	Orland Park Village, Illinois	
IL337	Oswego Village, Illinois	
IL341	Palatine Village, Illinois	
IL342	Palos Heights City, Illinois	
IL343	Palos Hills City, Illinois	
IL346	Park Ridge City, Illinois	
IL347	Pekin City, Illinois	
IL350	Peoria City, Illinois	
IL351	Peoria County, Illinois	
IL352	Perry County, Illinois	
IL354	Piatt County, Illinois	
IL355	Pike County, Illinois	
IL356	Plainfield Village, Illinois	
IL360	Pope County, Illinois	
IL361	Posen Village, Illinois	Allocations in Illinois will be made in accordance with the Illinois Opioid Allocation Agreement.
IL362	Princeton City, Illinois	
IL365	Pulaski County, Illinois	
IL366	Putnam County, Illinois	
IL367	Quincy City, Illinois	
IL369	Randolph County, Illinois	
IL373	Richland County, Illinois	
IL376	River Forest Village, Illinois	
IL377	River Grove Village, Illinois	
IL380	Riverside Village, Illinois	
IL381	Rock Island City, Illinois	
IL382	Rock Island County, Illinois	
IL384	Rockford City, Illinois	
IL388	Romeoville Village, Illinois	
IL395	Saline County, Illinois	
IL396	Sangamon County, Illinois	
IL399	Schaumburg Village, Illinois	
IL400	Schiller Park Village, Illinois	
IL401	Schuyler County, Illinois	
IL402	Scott County, Illinois	
IL403	Sesser City, Illinois	
IL404	Shelby County, Illinois	
IL408	Skokie Village, Illinois	
IL413	Springfield City, Illinois	
IL414	St Clair County, Illinois	
IL415	St. Charles City, Illinois	

State ID	Qualifying Subdivision	Consolidated State Allocation
IL416	Stark County, Illinois	
IL417	Stephenson County, Illinois	
IL421	Stone Park Village, Illinois	
IL422	Streamwood Village, Illinois	
IL423	Streator City, Illinois	
IL425	Summit Village, Illinois	
IL431	Tazewell County, Illinois	
IL433	Tinley Park Village, Illinois	
IL436	Union County, Illinois	
IL437	Urbana City, Illinois	
IL438	Vermilion County, Illinois	
IL441	Wabash County, Illinois	Allocations in Illinois will be made in accordance with the Illinois Opioid Allocation Agreement.
IL442	Warren County, Illinois	
IL446	Washington County, Illinois	
IL451	Waukegan City, Illinois	
IL453	Wayne County, Illinois	
IL456	West Frankfort City, Illinois	
IL461	Wheaton City, Illinois	
IL463	Wheeling Village, Illinois	
IL464	White County, Illinois	
IL465	Whiteside County, Illinois	
IL466	Will County, Illinois	
IL467	Williamson County, Illinois	
IL470	Winnebago County, Illinois	
IL475	Woodford County, Illinois	
IL476	Woodridge Village, Illinois	
IL485	Cicero Town, Illinois	

State ID	Qualifying Subdivision	Consolidated State Allocation
IN1	Adams County, Indiana	0.3093066943%
IN2	Advance Town, Indiana	0.0005697863%
IN3	Akron Town, Indiana	0.0003285254%
IN4	Alamo Town, Indiana	0.0005749195%
IN5	Albany Town, Indiana	0.0256968486%
IN6	Albion Town, Indiana	0.0216621457%
IN7	Alexandria City, Indiana	0.1062420448%
IN8	Alfordsville Town, Indiana	0.0001539963%
IN9	Allen County, Indiana	1.5529191846%
IN10	Alton Town, Indiana	0.0000307993%
IN11	Altona Town, Indiana	0.0012473700%
IN12	Ambia Town, Indiana	0.0006519177%
IN13	Amboy Town, Indiana	0.0004825217%
IN14	Amo Town, Indiana	0.0005749195%
IN15	Anderson City, Indiana	1.3828918739%
IN16	Andrews Town, Indiana	0.0060520544%
IN17	Angola City, Indiana	0.0947539211%
IN18	Arcadia Town, Indiana	0.0063138481%
IN19	Argos Town, Indiana	0.0167907295%
IN20	Ashley Town, Indiana	0.0062368500%
IN21	Atlanta Town, Indiana	0.0011652386%
IN22	Attica City, Indiana	0.0207587007%
IN23	Auburn City, Indiana	0.1472615249%
IN24	Aurora City, Indiana	0.0094399730%
IN25	Austin City, Indiana	0.0232277747%
IN26	Avilla Town, Indiana	0.0199579200%
IN27	Avon Town, Indiana	0.0164108720%
IN28	Bainbridge Town, Indiana	0.0014783644%
IN29	Bargersville Town, Indiana	0.0121041089%
IN30	Bartholomew County, Indiana	1.1839235258%
IN31	Batesville City, Indiana	0.1547046792%
IN32	Battle Ground Town, Indiana	0.0136286722%
IN33	Bedford City, Indiana	0.3269803359%
IN34	Beech Grove City, Indiana	0.0544736232%
IN35	Benton County, Indiana	0.0744315432%
IN36	Berne City, Indiana	0.0028078658%
IN37	Bethany Town, Indiana	0.0002720601%
IN38	Beverly Shores Town, Indiana	0.0154458285%
IN39	Bicknell City, Indiana	0.0013295014%
IN40	Birdseye Town, Indiana	0.0029464625%
IN41	Blackford County, Indiana	0.2715365360%
IN42	Bloomfield Town, Indiana	0.0042862302%
IN43	Bloomingdale Town, Indiana	0.0026025374%
IN44	Bloomington City, Indiana	0.8390231543%
IN45	Blountsville Town, Indiana	0.0002566605%
IN46	Bluffton City, Indiana	0.1002977878%
IN47	Boone County, Indiana	0.6762798684%
IN48	Boonville City, Indiana	0.1007854427%
IN49	Borden Town, Indiana	0.0017504246%

State ID	Qualifying Subdivision	Consolidated State Allocation
IN50	Boston Town, Indiana	0.0005697863%
IN51	Boswell Town, Indiana	0.0021097493%
IN52	Bourbon Town, Indiana	0.0173040505%
IN53	Brazil City, Indiana	0.0626816258%
IN54	Bremen Town, Indiana	0.0529387935%
IN55	Bristol Town, Indiana	0.0158462189%
IN56	Brook Town, Indiana	0.0037369768%
IN57	Brooklyn Town, Indiana	0.0065705086%
IN58	Brooksburg Town, Indiana	0.0009547770%
IN59	Brookston Town, Indiana	0.0116677860%
IN60	Brookville Town, Indiana	0.0538935705%
IN61	Brown County, Indiana	0.1879165471%
IN62	Brownsburg Town, Indiana	0.1125918254%
IN63	Brownstown, Indiana	0.0033622525%
IN64	Bruceville Town, Indiana	0.0002412609%
IN65	Bryant Town, Indiana	0.0003747243%
IN66	Bunker Hill Town, Indiana	0.0010985069%
IN67	Burket Town, Indiana	0.0011139065%
IN68	Burlington Town, Indiana	0.0063805799%
IN69	Burnettsville Town, Indiana	0.0004619889%
IN70	Burns Harbor Town, Indiana	0.0397977762%
IN71	Butler City, Indiana	0.0239156248%
IN72	Cadiz Town, Indiana	0.0002823265%
IN73	Cambridge City Town, Indiana	0.0241517525%
IN74	Camden Town, Indiana	0.0064216456%
IN75	Campbellsburg Town, Indiana	0.0081874698%
IN76	Cannelburg Town, Indiana	0.0002258612%
IN77	Cannelton City, Indiana	0.0018325559%
IN78	Carbon Town, Indiana	0.0026846688%
IN79	Carlisle Town, Indiana	0.0017658242%
IN80	Carmel City, Indiana	0.3676250917%
IN81	Carroll County, Indiana	0.1629794136%
IN82	Carthage Town, Indiana	0.0013141017%
IN83	Cass County, Indiana	0.3389612478%
IN84	Cayuga Town, Indiana	0.0078486779%
IN85	Cedar Grove Town, Indiana	0.0004055236%
IN86	Cedar Lake Town, Indiana	0.0511678360%
IN87	Center Point Town, Indiana	0.0016374940%
IN88	Centerville Town, Indiana	0.0350752231%
IN89	Chalmers Town, Indiana	0.0006827169%
IN90	Chandler Town, Indiana	0.0347518309%
IN91	Charlestown City, Indiana	0.0146039821%
IN92	Chesterfield Town, Indiana	0.0379036217%
IN93	Chesterton Town, Indiana	0.2160003384%
IN94	Chrisney Town, Indiana	0.0032339222%
IN95	Churubusco Town, Indiana	0.0000564653%
IN96	Cicero Town, Indiana	0.0173297165%
IN97	Clark County, Indiana	1.9376070659%
IN98	Clarks Hill Town, Indiana	0.0040603690%

State ID	Qualifying Subdivision	Consolidated State Allocation
IN99	Clarksville Town, Indiana	0.1071762890%
IN100	Clay City Town, Indiana	0.0057697279%
IN101	Clay County, Indiana	0.2954521608%
IN102	Claypool Town, Indiana	0.0024690740%
IN103	Clayton Town, Indiana	0.0006981165%
IN104	Clear Lake Town, Indiana	0.0019762858%
IN105	Clifford Town, Indiana	0.0002309944%
IN106	Clinton City, Indiana	0.0336584572%
IN107	Clinton County, Indiana	0.2744214000%
IN108	Cloverdale Town, Indiana	0.0050202793%
IN109	Coatesville Town, Indiana	0.0007494486%
IN110	Colfax Town, Indiana	0.0046147557%
IN111	Columbia City, Indiana	0.0886402681%
IN112	Columbus City, Indiana	0.0764283618%
IN113	Connersville City, Indiana	0.4636161164%
IN114	Converse Town, Indiana	0.0045736900%
IN115	Corunna Town, Indiana	0.0016374940%
IN116	Corydon Town, Indiana	0.0069811654%
IN117	Country Club Heights Town, Indiana	0.0012217040%
IN118	Covington City, Indiana	0.0257122483%
IN119	Crandall Town, Indiana	0.0000153996%
IN120	Crane Town, Indiana	0.0015656290%
IN121	Crawford County, Indiana	0.1338946464%
IN122	Crawfordsville City, Indiana	0.2738413473%
IN123	Cromwell Town, Indiana	0.0034546502%
IN124	Crothersville Town, Indiana	0.0018222895%
IN125	Crown Point City, Indiana	0.1246189362%
IN126	Culver Town, Indiana	0.0289821030%
IN127	Cynthiana Town, Indiana	0.0032749879%
IN128	Dale Town, Indiana	0.0059750563%
IN129	Daleville Town, Indiana	0.0199784528%
IN130	Dana Town, Indiana	0.0050510785%
IN131	Danville Town, Indiana	0.0039474384%
IN132	Darlington Town, Indiana	0.0074790868%
IN133	Darmstadt Town, Indiana	0.0109491367%
IN134	Daviess County, Indiana	0.3758998260%
IN135	Dayton Town, Indiana	0.0114727241%
IN136	DeKalb County, Indiana	0.2773473296%
IN137	De Motte Town, Indiana	0.0070940960%
IN138	Dearborn County, Indiana	0.9577234994%
IN139	Decatur City, Indiana	0.0090909147%
IN140	Decatur County, Indiana	0.3533239690%
IN141	Decker Town, Indiana	0.0001231970%
IN142	Delaware County, Indiana	1.2035734533%
IN143	Delphi City, Indiana	0.0177249737%
IN144	Denver Town, Indiana	0.0006005856%
IN145	Dillsboro Town, Indiana	0.0060007223%
IN146	Dublin Town, Indiana	0.0051588759%

State ID	Qualifying Subdivision	Consolidated State Allocation
IN147	Dubois County, Indiana	0.2728968366%
IN148	Dugger Town, Indiana	0.0023407437%
IN149	Dune Acres Town, Indiana	0.0046917538%
IN150	Dunkirk City, Indiana	0.0079872746%
IN151	Dunreith Town, Indiana	0.0003387919%
IN152	Dupont Town, Indiana	0.0039782377%
IN153	Dyer Town, Indiana	0.0533186510%
IN154	Earl Park Town, Indiana	0.0009188446%
IN155	East Chicago City, Indiana	0.4621018195%
IN156	East Germantown, Indiana	0.0015861619%
IN157	Eaton Town, Indiana	0.0166418664%
IN158	Economy Town, Indiana	0.0007648483%
IN159	Edgewood Town, Indiana	0.0243673473%
IN160	Edinburgh Town, Indiana	0.0198963215%
IN161	Edwardsport Town, Indiana	0.0001488631%
IN162	Elberfeld Town, Indiana	0.0031569241%
IN163	Elizabeth Town, Indiana	0.0000153996%
IN164	Elizabethtown, Indiana	0.0005133210%
IN165	Elkhart City, Indiana	0.5425802839%
IN166	Elkhart County, Indiana	1.1662652839%
IN167	Ellettsville Town, Indiana	0.0677789032%
IN168	Elnora Town, Indiana	0.0013551674%
IN169	Elwood City, Indiana	0.2112777853%
IN170	English Town, Indiana	0.0003747243%
IN171	Etna Green Town, Indiana	0.0033725189%
IN172	Evansville City, Indiana	1.9321196646%
IN173	Fairland Town, Indiana	0.0005133210%
IN174	Fairmount Town, Indiana	0.0104409489%
IN175	Fairview Park Town, Indiana	0.0093373088%
IN176	Farmersburg Town, Indiana	0.0039731044%
IN177	Farmland Town, Indiana	0.0182074954%
IN178	Fayette County, Indiana	0.2945127834%
IN179	Ferdinand Town, Indiana	0.0189415444%
IN180	Fillmore Town, Indiana	0.0010420416%
IN181	Fishers City, Indiana	0.1521842732%
IN182	Flora Town, Indiana	0.0175966435%
IN183	Floyd County, Indiana	1.5760956272%
IN184	Fort Branch Town, Indiana	0.0073250905%
IN185	Fort Wayne City, Indiana	2.7340040454%
IN186	Fortville Town, Indiana	0.0152712994%
IN187	Fountain City Town, Indiana	0.0045993560%
IN188	Fountain County, Indiana	0.1640779205%
IN189	Fowler Town, Indiana	0.0093886409%
IN190	Fowlerton Town, Indiana	0.0022688788%
IN191	Francesville Town, Indiana	0.0011498390%
IN192	Francisco Town, Indiana	0.0027668001%
IN193	Frankfort City, Indiana	0.1520302769%
IN194	Franklin City, Indiana	0.1074072834%
IN195	Franklin County, Indiana	0.2948618417%

State ID	Qualifying Subdivision	Consolidated State Allocation
IN196	Frankton Town, Indiana	0.0115548554%
IN197	Fremont Town, Indiana	0.0201427156%
IN198	French Lick Town, Indiana	0.0211642243%
IN199	Fulton County, Indiana	0.2359941908%
IN200	Fulton Town, Indiana	0.0002925930%
IN201	Galveston Town, Indiana	0.0012730360%
IN202	Garrett City, Indiana	0.0387249353%
IN203	Gary City, Indiana	0.7295266544%
IN204	Gas City, Indiana	0.0544736232%
IN205	Gaston Town, Indiana	0.0083209332%
IN206	Geneva Town, Indiana	0.0008367132%
IN207	Gentryville Town, Indiana	0.0017966235%
IN208	Georgetown, Indiana	0.0044864254%
IN209	Gibson County, Indiana	0.2588523744%
IN210	Glenwood Town, Indiana	0.0027103348%
IN211	Goodland Town, Indiana	0.0046352885%
IN212	Goshen City, Indiana	0.2386377939%
IN213	Gosport Town, Indiana	0.0097736316%
IN214	Grabill Town, Indiana	0.0057543283%
IN215	Grandview Town, Indiana	0.0048406169%
IN216	Grant County, Indiana	0.7449878825%
IN217	Greencastle City, Indiana	0.0286279115%
IN218	Greendale City, Indiana	0.0136543383%
IN219	Greene County, Indiana	0.4315540875%
IN220	Greenfield City, Indiana	0.0612289274%
IN221	Greens Fork Town, Indiana	0.0017504246%
IN222	Greensboro Town, Indiana	0.0002720601%
IN223	Greensburg City, Indiana	0.0195369968%
IN224	Greentown, Indiana	0.0017452914%
IN225	Greenville Town, Indiana	0.0009291110%
IN226	Greenwood City, Indiana	0.1803758618%
IN227	Griffin Town, Indiana	0.0010112423%
IN228	Griffith Town, Indiana	0.0696165923%
IN229	Hagerstown, Indiana	0.0234433695%
IN230	Hamilton County, Indiana	2.0269762499%
IN231	Hamilton Town, Indiana	0.0034341174%
IN232	Hamlet Town, Indiana	0.0188234806%
IN233	Hammond City, Indiana	1.0770244302%
IN234	Hancock County, Indiana	0.8954422640%
IN235	Hanover Town, Indiana	0.0079667417%
IN236	Hardinsburg Town, Indiana	0.0034649167%
IN237	Harmony Town, Indiana	0.0043529620%
IN238	Harrison County, Indiana	0.5610033742%
IN239	Hartford City, Indiana	0.1033058488%
IN240	Hartsville Town, Indiana	0.0003849907%
IN241	Haubstadt Town, Indiana	0.0066783060%
IN242	Hazleton Town, Indiana	0.0014937641%
IN243	Hebron Town, Indiana	0.0722037301%
IN244	Hendricks County, Indiana	1.5700846384%

State ID	Qualifying Subdivision	Consolidated State Allocation
IN245	Henry County, Indiana	1.1653207733%
IN246	Highland Town, Indiana	0.0864997196%
IN247	Hillsboro Town, Indiana	0.0040501026%
IN248	Hobart City, Indiana	0.1594631648%
IN249	Holland Town, Indiana	0.0044453598%
IN250	Holton Town, Indiana	0.0060058556%
IN251	Hope Town, Indiana	0.0036805115%
IN252	Howard County, Indiana	1.8693507742%
IN253	Hudson Town, Indiana	0.0029669953%
IN254	Huntertown, Indiana	0.0415225347%
IN255	Huntingburg City, Indiana	0.0455829037%
IN256	Huntington City, Indiana	0.2487142849%
IN257	Huntington County, Indiana	0.2617013059%
IN258	Hymera Town, Indiana	0.0020173515%
IN259	Indian Village Town, Indiana	0.0006005856%
IN260	Indianapolis City, Indiana	15.8348539612%
IN261	Ingalls Town, Indiana	0.0015194301%
IN262	Jackson County, Indiana	0.7183516565%
IN263	Jamestown, Indiana	0.0010471748%
IN264	Jasonville City, Indiana	0.0039628380%
IN265	Jasper City, Indiana	0.0892100544%
IN266	Jasper County, Indiana	0.4269598647%
IN267	Jay County, Indiana	0.3117552354%
IN268	Jefferson County, Indiana	0.3577898616%
IN269	Jeffersonville City, Indiana	0.1772754031%
IN270	Jennings County, Indiana	0.4175198917%
IN271	Johnson County, Indiana	1.7413644524%
IN272	Jonesboro City, Indiana	0.0065499758%
IN273	Jonesville Town, Indiana	0.0001847956%
IN274	Kempton Town, Indiana	0.0027462673%
IN275	Kendallville City, Indiana	0.0955393022%
IN276	Kennard Town, Indiana	0.0009034449%
IN277	Kentland Town, Indiana	0.0053796040%
IN278	Kewanna Town, Indiana	0.0005389870%
IN279	Kingman Town, Indiana	0.0037934421%
IN280	Kingsbury Town, Indiana	0.0012935689%
IN281	Kingsford Heights Town, Indiana	0.0045942228%
IN282	Kirklin Town, Indiana	0.0053282719%
IN283	Knightstown, Indiana	0.0036856447%
IN284	Knightsville Town, Indiana	0.0053026058%
IN285	Knox City, Indiana	0.0998614649%
IN286	Knox County, Indiana	0.5298755895%
IN287	Kokomo City, Indiana	0.2824600066%
IN288	Kosciusko County, Indiana	0.4936351277%
IN289	Kouts Town, Indiana	0.0383502110%
IN290	La Crosse Town, Indiana	0.0028283986%
IN291	La Fontaine Town, Indiana	0.0017555578%
IN292	La Paz Town, Indiana	0.0034187178%
IN293	La Porte City, Indiana	0.1637904607%

State ID	Qualifying Subdivision	Consolidated State Allocation
IN294	La Porte County, Indiana	0.7761413333%
IN295	Laconia Town, Indiana	0.0000051332%
IN296	Ladoga Town, Indiana	0.0108156732%
IN297	Lafayette City, Indiana	1.0122433215%
IN298	Lagrange County, Indiana	0.2088446438%
IN299	Lagrange Town, Indiana	0.0232996396%
IN300	Lagro Town, Indiana	0.0008264468%
IN301	Lake County, Indiana	1.8344141478%
IN302	Lake Station City, Indiana	0.0738514905%
IN303	Lakeville Town, Indiana	0.0035470480%
IN304	Lanesville Town, Indiana	0.0000513321%
IN305	Lapel Town, Indiana	0.0216570125%
IN306	Larwill Town, Indiana	0.0024998732%
IN307	Laurel Town, Indiana	0.0013295014%
IN308	Lawrence City, Indiana	0.1413634668%
IN309	Lawrence County, Indiana	0.4144758982%
IN310	Lawrenceburg City, Indiana	0.0397721101%
IN311	Leavenworth Town, Indiana	0.0001385967%
IN312	Lebanon City, Indiana	0.0221087349%
IN313	Leesburg Town, Indiana	0.0032236558%
IN314	Leo-Cedarville Town, Indiana	0.0196037285%
IN315	Lewisville Town, Indiana	0.0006981165%
IN316	Liberty Town, Indiana	0.0173399830%
IN317	Ligonier City, Indiana	0.0407012211%
IN318	Linden Town, Indiana	0.0066885725%
IN319	Linton City, Indiana	0.0214516841%
IN320	Little York Town, Indiana	0.0026795356%
IN321	Livonia Town, Indiana	0.0017966235%
IN322	Lizton Town, Indiana	0.0006827169%
IN323	Logansport City, Indiana	0.0184076906%
IN324	Long Beach Town, Indiana	0.0039115059%
IN325	Loogootee City, Indiana	0.0178533039%
IN326	Losantville Town, Indiana	0.0065191765%
IN327	Lowell Town, Indiana	0.0413531388%
IN328	Lynn Town, Indiana	0.0149633068%
IN329	Lynnville Town, Indiana	0.0045377575%
IN330	Lyons Town, Indiana	0.0016426272%
IN331	Mackey Town, Indiana	0.0006159852%
IN332	Macy Town, Indiana	0.0002617937%
IN333	Madison City, Indiana	0.1309584504%
IN334	Madison County, Indiana	1.3792626945%
IN335	Marengo Town, Indiana	0.0004825217%
IN336	Marion City, Indiana	0.7936558454%
IN337	Markle Town, Indiana	0.0068887677%
IN338	Markleville Town, Indiana	0.0080540063%
IN339	Marshall County, Indiana	0.2679792216%
IN340	Marshall Town, Indiana	0.0025409389%
IN341	Martin County, Indiana	0.0865151193%
IN342	Martinsville City, Indiana	0.0794004904%

State ID	Qualifying Subdivision	Consolidated State Allocation
IN343	Matthews Town, Indiana	0.0050818778%
IN344	Mauckport Town, Indiana	0.0000051332%
IN345	McCordsville Town, Indiana	0.0170833225%
IN346	Mecca Town, Indiana	0.0025460721%
IN347	Medaryville Town, Indiana	0.0008110472%
IN348	Medora Town, Indiana	0.0008007807%
IN349	Mellott Town, Indiana	0.0014732312%
IN350	Mentone Town, Indiana	0.0056311312%
IN351	Merom Town, Indiana	0.0005903191%
IN352	Merrillville Town, Indiana	0.1076947432%
IN353	Miami County, Indiana	0.2157180118%
IN354	Michiana Shores Town, Indiana	0.0016066947%
IN355	Michigan City, Indiana	0.5192652447%
IN356	Michigantown, Indiana	0.0030593931%
IN357	Middlebury Town, Indiana	0.0186335519%
IN358	Middletown, Indiana	0.0039063727%
IN359	Milan Town, Indiana	0.0291463657%
IN360	Milford Town, Indiana	0.0156562901%
IN361	Millersburg Town, Indiana	0.0043940277%
IN362	Millhousen Town, Indiana	0.0001693959%
IN363	Milltown, Indiana	0.0004773885%
IN364	Milton Town, Indiana	0.0000564653%
IN365	Mishawaka City, Indiana	0.5537912143%
IN366	Mitchell City, Indiana	0.0424721785%
IN367	Modoc Town, Indiana	0.0044453598%
IN368	Monon Town, Indiana	0.0132898804%
IN369	Monroe City Town, Indiana	0.0002669269%
IN370	Monroe County, Indiana	1.1604288242%
IN371	Monroe Town, Indiana	0.0007597151%
IN372	Monroeville Town, Indiana	0.0067501710%
IN373	Monrovia Town, Indiana	0.0058929249%
IN374	Monterey Town, Indiana	0.0002874598%
IN375	Montezuma Town, Indiana	0.0078948768%
IN376	Montgomery County, Indiana	0.3881322652%
IN377	Montgomery Town, Indiana	0.0003028594%
IN378	Monticello City, Indiana	0.0859504662%
IN379	Montpelier City, Indiana	0.0238026942%
IN380	Mooreland Town, Indiana	0.0007083830%
IN381	Moores Hill Town, Indiana	0.0009804431%
IN382	Mooresville Town, Indiana	0.0679534323%
IN383	Morgan County, Indiana	1.1892004656%
IN384	Morgantown, Indiana	0.0033263200%
IN385	Morocco Town, Indiana	0.0043324291%
IN386	Morristown, Indiana	0.0014218991%
IN387	Mount Auburn Town, Indiana	0.0004568557%
IN388	Mount Ayr Town, Indiana	0.0004619889%
IN389	Mount Carmel Town, Indiana	0.0002207280%
IN390	Mount Etna Town, Indiana	0.0009496438%
IN391	Mount Summit Town, Indiana	0.0006724505%

State ID	Qualifying Subdivision	Consolidated State Allocation
IN392	Mount Vernon City, Indiana	0.0528001968%
IN393	Mulberry Town, Indiana	0.0102048212%
IN394	Muncie City, Indiana	1.1426730513%
IN395	Munster Town, Indiana	0.1401776953%
IN396	Napoleon Town, Indiana	0.0029207964%
IN397	Nappanee City, Indiana	0.0750937273%
IN398	Nashville Town, Indiana	0.0122940377%
IN399	New Albany City, Indiana	0.1005493151%
IN400	New Amsterdam Town, Indiana	0.0000000000%
IN401	New Carlisle Town, Indiana	0.0260048412%
IN402	New Castle City, Indiana	0.0525435363%
IN403	New Chicago Town, Indiana	0.0302397394%
IN404	New Harmony Town, Indiana	0.0046404217%
IN405	New Haven City, Indiana	0.1210256893%
IN406	New Market Town, Indiana	0.0055849323%
IN407	New Middletown, Indiana	0.0000102664%
IN408	New Palestine Town, Indiana	0.0039269056%
IN409	New Pekin Town, Indiana	0.0237000300%
IN410	New Point Town, Indiana	0.0004311896%
IN411	New Richmond Town, Indiana	0.0029464625%
IN412	New Ross Town, Indiana	0.0030542599%
IN413	New Whiteland Town, Indiana	0.0149735732%
IN414	Newberry Town, Indiana	0.0004311896%
IN415	Newburgh Town, Indiana	0.0335968586%
IN416	Newport Town, Indiana	0.0042554310%
IN417	Newton County, Indiana	0.1317386983%
IN418	Newtown, Indiana	0.0019352201%
IN419	Noble County, Indiana	0.3308610426%
IN420	Noblesville City, Indiana	0.1813255057%
IN421	North Judson Town, Indiana	0.0550690756%
IN422	North Liberty Town, Indiana	0.0258405785%
IN423	North Manchester Town, Indiana	0.0190904075%
IN424	North Salem Town, Indiana	0.0007289158%
IN425	North Vernon City, Indiana	0.1513680928%
IN426	North Webster Town, Indiana	0.0116061875%
IN427	Oakland City, Indiana	0.0117550506%
IN428	Oaktown, Indiana	0.0003028594%
IN429	Odon Town, Indiana	0.0001129306%
IN430	Ogden Dunes Town, Indiana	0.0007545819%
IN431	Ohio County, Indiana	0.0605102780%
IN432	Oldenburg Town, Indiana	0.0017555578%
IN433	Onward Town, Indiana	0.0000205328%
IN434	Oolitic Town, Indiana	0.0059288574%
IN435	Orange County, Indiana	0.1597198253%
IN436	Orestes Town, Indiana	0.0064113791%
IN437	Orland Town, Indiana	0.0025255393%
IN438	Orleans Town, Indiana	0.0250859967%
IN439	Osceola Town, Indiana	0.0333607310%
IN440	Osgood Town, Indiana	0.0249576664%

State ID	Qualifying Subdivision	Consolidated State Allocation
IN441	Ossian Town, Indiana	0.0269134194%
IN442	Otterbein Town, Indiana	0.0047636188%
IN443	Owen County, Indiana	0.2265234186%
IN444	Owensville Town, Indiana	0.0056362644%
IN445	Oxford Town, Indiana	0.0039166391%
IN446	Palmyra Town, Indiana	0.0000821314%
IN447	Paoli Town, Indiana	0.0428417696%
IN448	Paragon Town, Indiana	0.0022226799%
IN449	Parke County, Indiana	0.1418203225%
IN450	Parker City Town, Indiana	0.0194291994%
IN451	Patoka Town, Indiana	0.0042605642%
IN452	Patriot Town, Indiana	0.0022740120%
IN453	Pendleton Town, Indiana	0.0746163388%
IN454	Pennville Town, Indiana	0.0010009759%
IN455	Perry County, Indiana	0.2167651867%
IN456	Perrysville Town, Indiana	0.0037934421%
IN457	Peru City, Indiana	0.1826036749%
IN458	Petersburg City, Indiana	0.0103588175%
IN459	Pierceton Town, Indiana	0.0102869526%
IN460	Pike County, Indiana	0.1238284218%
IN461	Pine Village Town, Indiana	0.0008880453%
IN462	Pittsboro Town, Indiana	0.0022842784%
IN463	Plainfield Town, Indiana	0.1021046776%
IN464	Plainville Town, Indiana	0.0007186494%
IN465	Plymouth City, Indiana	0.1356142717%
IN466	Poneto Town, Indiana	0.0011087733%
IN467	Portage City, Indiana	0.4894412953%
IN468	Porter County, Indiana	1.1076491603%
IN469	Porter Town, Indiana	0.1634722017%
IN470	Portland City, Indiana	0.0123299701%
IN471	Posey County, Indiana	0.1942714610%
IN472	Poseyville Town, Indiana	0.0044658926%
IN473	Pottawattamie Park Town, Indiana	0.0012319704%
IN474	Princes Lakes Town, Indiana	0.0039063727%
IN475	Princeton City, Indiana	0.0453005772%
IN476	Pulaski County, Indiana	0.1885530652%
IN477	Putnam County, Indiana	0.4476056348%
IN478	Randolph County, Indiana	0.1948463805%
IN479	Redkey Town, Indiana	0.0011601054%
IN480	Remington Town, Indiana	0.0024228751%
IN481	Rensselaer City, Indiana	0.0101278231%
IN482	Reynolds Town, Indiana	0.0007083830%
IN483	Richland Town, Indiana	0.0026898020%
IN484	Richmond City, Indiana	0.6900830697%
IN485	Ridgeville Town, Indiana	0.0178943696%
IN486	Riley Town, Indiana	0.0014629648%
IN487	Ripley County, Indiana	0.2963915383%
IN488	Rising Sun City, Indiana	0.0356090769%
IN489	River Forest Town, Indiana	0.0003439251%

State ID	Qualifying Subdivision	Consolidated State Allocation
IN490	Roachdale Town, Indiana	0.0017760906%
IN491	Roann Town, Indiana	0.0009599102%
IN492	Roanoke Town, Indiana	0.0123402365%
IN493	Rochester City, Indiana	0.0090652486%
IN494	Rockport City, Indiana	0.0104768814%
IN495	Rockville Town, Indiana	0.0245162104%
IN496	Rome City Town, Indiana	0.0125096325%
IN497	Rosedale Town, Indiana	0.0056105984%
IN498	Roseland Town, Indiana	0.0028283986%
IN499	Rossville Town, Indiana	0.0134079442%
IN500	Royal Center Town, Indiana	0.0001796623%
IN501	Rush County, Indiana	0.2195011875%
IN502	Rushville City, Indiana	0.0154047628%
IN503	Russellville Town, Indiana	0.0006929833%
IN504	Russiaville Town, Indiana	0.0008059140%
IN505	Salamonia Town, Indiana	0.0002258612%
IN506	Salem City, Indiana	0.0949284502%
IN507	Saltillo Town, Indiana	0.0012833025%
IN508	Sandborn Town, Indiana	0.0002053284%
IN509	Santa Claus Town, Indiana	0.0075252857%
IN510	Saratoga Town, Indiana	0.0045018251%
IN511	Schererville Town, Indiana	0.1304861951%
IN512	Schneider Town, Indiana	0.0009342442%
IN513	Scott County, Indiana	1.2220735416%
IN514	Scottsburg City, Indiana	0.0625019635%
IN515	Seelyville Town, Indiana	0.0082952672%
IN516	Sellersburg Town, Indiana	0.0135722069%
IN517	Selma Town, Indiana	0.0080899388%
IN518	Seymour City, Indiana	0.0450541831%
IN519	Shadeland Town, Indiana	0.0129356889%
IN520	Shamrock Lakes Town, Indiana	0.0030901923%
IN521	Sharpsville Town, Indiana	0.0050818778%
IN522	Shelburn Town, Indiana	0.0044402265%
IN523	Shelby County, Indiana	0.0450541831%
IN524	Shelbyville City, Indiana	0.5457372080%
IN525	Sheridan Town, Indiana	0.0121657074%
IN526	Shipshewana Town, Indiana	0.0047174199%
IN527	Shirley Town, Indiana	0.0011806383%
IN528	Shoals Town, Indiana	0.0066988389%
IN529	Sidney Town, Indiana	0.0004773885%
IN530	Silver Lake Town, Indiana	0.0053128722%
IN531	Somerville Town, Indiana	0.0016939593%
IN532	South Bend City, Indiana	1.3582319336%
IN533	South Whitley Town, Indiana	0.0000564653%
IN534	Southport City, Indiana	0.0003490583%
IN535	Speedway Town, Indiana	0.0716390770%
IN536	Spencer County, Indiana	0.1563113739%
IN537	Spencer Town, Indiana	0.0335301269%
IN538	Spiceland Town, Indiana	0.0016836928%

State ID	Qualifying Subdivision	Consolidated State Allocation
IN539	Spring Grove Town, Indiana	0.0014167659%
IN540	Spring Lake Town, Indiana	0.0003079926%
IN541	Springport Town, Indiana	0.0002771933%
IN542	Spurgeon Town, Indiana	0.0006827169%
IN543	St. Joseph County, Indiana	1.3360462005%
IN544	St. Joe Town, Indiana	0.0029823949%
IN545	St. John Town, Indiana	0.0653868274%
IN546	St. Leon Town, Indiana	0.0011190398%
IN547	St. Paul Town, Indiana	0.0016220943%
IN548	Starke County, Indiana	0.5754687596%
IN549	State Line City Town, Indiana	0.0005800527%
IN550	Staunton Town, Indiana	0.0035419148%
IN551	Steuben County, Indiana	0.2289052280%
IN552	Stilesville Town, Indiana	0.0004517225%
IN553	Stinesville Town, Indiana	0.0014321656%
IN554	Straughn Town, Indiana	0.0004260564%
IN555	Sullivan City, Indiana	0.0150608378%
IN556	Sullivan County, Indiana	0.4997077150%
IN557	Sulphur Springs Town, Indiana	0.0007494486%
IN558	Summitville Town, Indiana	0.0154098960%
IN559	Sunman Town, Indiana	0.0161336786%
IN560	Swayzee Town, Indiana	0.0084954623%
IN561	Sweetser Town, Indiana	0.0043786280%
IN562	Switz City Town, Indiana	0.0006570509%
IN563	Switzerland County, Indiana	0.1390381227%
IN564	Syracuse Town, Indiana	0.0288332399%
IN565	Tell City, Indiana	0.0071351617%
IN566	Tennyson Town, Indiana	0.0014372988%
IN567	Terre Haute City, Indiana	1.0172687340%
IN568	Thorntown, Indiana	0.0019968186%
IN569	Tippecanoe County, Indiana	0.9836513425%
IN570	Tipton City, Indiana	0.0756840464%
IN571	Tipton County, Indiana	0.1461219523%
IN572	Topeka Town, Indiana	0.0102510201%
IN573	Town of Pines Town, Indiana	0.0177506398%
IN574	Trafalgar Town, Indiana	0.0034751831%
IN575	Trail Creek Town, Indiana	0.0070068315%
IN576	Troy Town, Indiana	0.0003695911%
IN577	Ulen Town, Indiana	0.0001385967%
IN578	Union City, Indiana	0.0467276095%
IN579	Union County, Indiana	0.0788666365%
IN580	Uniondale Town, Indiana	0.0020532840%
IN581	Universal Town, Indiana	0.0029823949%
IN582	Upland Town, Indiana	0.0132693475%
IN583	Utica Town, Indiana	0.0015553626%
IN584	Valparaiso City, Indiana	0.4508549566%
IN585	Van Buren Town, Indiana	0.0074585540%
IN586	Vanderburgh County, Indiana	1.8730004864%
IN587	Veedersburg Town, Indiana	0.0174477804%

State ID	Qualifying Subdivision	Consolidated State Allocation
IN588	Vera Cruz Town, Indiana	0.0005287206%
IN589	Vermillion County, Indiana	0.1479237090%
IN590	Vernon Town, Indiana	0.0044556262%
IN591	Versailles Town, Indiana	0.0325753499%
IN592	Vevay Town, Indiana	0.0222627312%
IN593	Vigo County, Indiana	0.7949340146%
IN594	Vincennes City, Indiana	0.0141984585%
IN595	Wabash City, Indiana	0.0616549838%
IN596	Wabash County, Indiana	0.5254353629%
IN597	Wakarusa Town, Indiana	0.0133566121%
IN598	Walkerton Town, Indiana	0.0293414277%
IN599	Wallace Town, Indiana	0.0007443154%
IN600	Walton Town, Indiana	0.0010215088%
IN601	Wanatah Town, Indiana	0.0034289842%
IN602	Warren County, Indiana	0.0576818794%
IN603	Warren Town, Indiana	0.0076587491%
IN604	Warrick County, Indiana	0.3991430003%
IN605	Warsaw City, Indiana	0.2580772597%
IN606	Washington City, Indiana	0.0149581736%
IN607	Washington County, Indiana	0.3404396122%
IN608	Waterloo Town, Indiana	0.0127970922%
IN609	Waveland Town, Indiana	0.0037215772%
IN610	Wayne County, Indiana	0.7657876490%
IN611	Waynetown, Indiana	0.0084133310%
IN612	Wells County, Indiana	0.2019866754%
IN613	West Baden Springs Town, Indiana	0.0054822681%
IN614	West College Corner Town, Indiana	0.0065345762%
IN615	West Harrison Town, Indiana	0.0004773885%
IN616	West Lafayette City, Indiana	0.2612290506%
IN617	West Lebanon Town, Indiana	0.0029772617%
IN618	West Terre Haute Town, Indiana	0.0180175667%
IN619	Westfield City, Indiana	0.1106874046%
IN620	Westport Town, Indiana	0.0022021470%
IN621	Westville Town, Indiana	0.0405164256%
IN622	Wheatfield Town, Indiana	0.0014064995%
IN623	Wheatland Town, Indiana	0.0002361277%
IN624	White County, Indiana	0.2045738132%
IN625	Whiteland Town, Indiana	0.0126892948%
IN626	Whitestown, Indiana	0.0075560849%
IN627	Whitewater Town, Indiana	0.0002977262%
IN628	Whiting City, Indiana	0.0746933369%
IN629	Whitley County, Indiana	0.3073920070%
IN630	Wilkinson Town, Indiana	0.0006365180%
IN631	Williamsport Town, Indiana	0.0094553726%
IN632	Winamac Town, Indiana	0.0021559481%
IN633	Winchester City, Indiana	0.0715004804%
IN634	Windfall City Town, Indiana	0.0058877917%

State ID	Qualifying Subdivision	Consolidated State Allocation
IN635	Winfield Town, Indiana	0.0246548070%
IN636	Wingate Town, Indiana	0.0023253441%
IN637	Winona Lake Town, Indiana	0.0964016815%
IN638	Winslow Town, Indiana	0.0028489315%
IN639	Wolcott Town, Indiana	0.0013397678%
IN640	Wolcottville Town, Indiana	0.0086494586%
IN641	Woodburn City, Indiana	0.0082131358%
IN642	Woodlawn Heights Town, Indiana	0.0012217040%
IN643	Worthington Town, Indiana	0.0026128038%
IN644	Yeoman Town, Indiana	0.0014578316%
IN645	Yorktown, Indiana	0.0901956307%
IN646	Zanesville Town, Indiana	0.0025922710%
IN647	Zionsville Town, Indiana	0.0375853627%
IN648	Cumberland Town, Indiana	0.0148247101%

State ID	Qualifying Subdivision	Consolidated State Allocation
IA1	Adair County, Iowa	0.2556895492%
IA2	Adams County, Iowa	0.1116738610%
IA3	Allamakee County, Iowa	0.4458620571%
IA7	Appanoose County, Iowa	0.5319573473%
IA8	Audubon County, Iowa	0.1208090649%
IA9	Benton County, Iowa	0.5190077951%
IA11	Black Hawk County, Iowa	3.3423948145%
IA13	Boone County, Iowa	0.8229376316%
IA14	Bremer County, Iowa	0.7313291658%
IA15	Buchanan County, Iowa	0.3770114677%
IA16	Buena Vista County, Iowa	0.3269761930%
IA18	Butler County, Iowa	0.2707546223%
IA19	Calhoun County, Iowa	0.1889544807%
IA20	Carroll County, Iowa	0.6033080977%
IA21	Cass County, Iowa	0.3356626501%
IA22	Cedar County, Iowa	0.3655363695%
IA25	Cerro Gordo County, Iowa	1.6302973365%
IA26	Cherokee County, Iowa	0.2378358349%
IA27	Chickasaw County, Iowa	0.2431246372%
IA28	Clarke County, Iowa	0.3046029568%
IA29	Clay County, Iowa	0.2957241797%
IA30	Clayton County, Iowa	0.4574012621%
IA32	Clinton County, Iowa	1.4586196098%
IA36	Crawford County, Iowa	0.3305341145%
IA37	Dallas County, Iowa	1.4775951912%
IA39	Davis County, Iowa	0.1538560657%
IA40	Decatur County, Iowa	0.2531573348%
IA41	Delaware County, Iowa	0.3021348491%
IA43	Des Moines County, Iowa	1.5679856298%
IA44	Dickinson County, Iowa	0.3322329419%
IA46	Dubuque County, Iowa	2.7454332795%
IA47	Emmet County, Iowa	0.1753318082%
IA49	Fayette County, Iowa	0.5284635324%
IA50	Floyd County, Iowa	0.3285468070%
IA53	Franklin County, Iowa	0.2107187034%
IA54	Fremont County, Iowa	0.2047888342%
IA55	Greene County, Iowa	0.3578435662%
IA57	Grundy County, Iowa	0.3230977380%
IA58	Guthrie County, Iowa	0.2308482053%
IA59	Hamilton County, Iowa	0.3501828163%
IA60	Hancock County, Iowa	0.1901084012%
IA61	Hardin County, Iowa	0.4491314985%
IA62	Harrison County, Iowa	0.6178282639%
IA63	Henry County, Iowa	0.4451248302%
IA64	Howard County, Iowa	0.1714212999%
IA65	Humboldt County, Iowa	0.1929611491%
IA66	Ida County, Iowa	0.1680556985%
IA69	Iowa County, Iowa	0.2658504602%
IA70	Jackson County, Iowa	0.5490417812%

State ID	Qualifying Subdivision	Consolidated State Allocation
IA71	Jasper County, Iowa	1.6780568235%
IA72	Jefferson County, Iowa	0.5728253647%
IA73	Johnson County, Iowa	3.8223936863%
IA75	Jones County, Iowa	0.3884865660%
IA77	Keokuk County, Iowa	0.1980255779%
IA78	Kossuth County, Iowa	0.3482275621%
IA80	Lee County, Iowa	1.4586837165%
IA81	Linn County, Iowa	7.3285811041%
IA82	Louisa County, Iowa	0.3358870235%
IA83	Lucas County, Iowa	0.3300533143%
IA84	Lyon County, Iowa	0.1619335092%
IA85	Madison County, Iowa	0.4031349456%
IA86	Mahaska County, Iowa	0.7161999860%
IA88	Marion County, Iowa	1.1788259436%
IA89	Marshall County, Iowa	1.0363488161%
IA92	Mills County, Iowa	0.4947113580%
IA93	Mitchell County, Iowa	0.1894673343%
IA94	Monona County, Iowa	0.4457658971%
IA95	Monroe County, Iowa	0.2157510788%
IA96	Montgomery County, Iowa	0.5308995868%
IA98	Muscatine County, Iowa	1.0607414131%
IA102	O Brien County, Iowa	0.2348228203%
IA103	Osceola County, Iowa	0.1453939821%
IA106	Page County, Iowa	0.5824093155%
IA107	Palo Alto County, Iowa	0.1666132978%
IA110	Plymouth County, Iowa	0.4452850969%
IA111	Pocahontas County, Iowa	0.1165780231%
IA112	Polk County, Iowa	22.8108926250%
IA113	Pottawattamie County, Iowa	3.6145597841%
IA114	Poweshiek County, Iowa	0.4747100695%
IA115	Ringgold County, Iowa	0.1195910378%
IA116	Sac County, Iowa	0.2200782807%
IA117	Scott County, Iowa	8.8614042123%
IA118	Shelby County, Iowa	0.2859158555%
IA120	Sioux County, Iowa	0.4096738283%
IA123	Story County, Iowa	2.1665177789%
IA124	Tama County, Iowa	0.3449901740%
IA125	Taylor County, Iowa	0.1784409829%
IA126	Union County, Iowa	0.4629785445%
IA128	Van Buren County, Iowa	0.1525418785%
IA129	Wapello County, Iowa	1.0026607483%
IA130	Warren County, Iowa	1.3316563022%
IA131	Washington County, Iowa	0.5543626368%
IA135	Wayne County, Iowa	0.2440541843%
IA136	Webster County, Iowa	1.5957758817%
IA138	Winnebago County, Iowa	0.2340535400%
IA139	Winneshiek County, Iowa	0.3674595703%
IA140	Woodbury County, Iowa	2.5662230163%
IA141	Worth County, Iowa	0.2345663935%

State ID	Qualifying Subdivision	Consolidated State Allocation
IA142	Wright County, Iowa	0.2810437467%

State ID	Qualifying Subdivision	Consolidated State Allocation
KS1	Allen County, Kansas	0.2469590982%
KS2	Anderson County, Kansas	0.1033070846%
KS3	Andover City, Kansas	0.2965259109%
KS4	Arkansas City, Kansas	0.2517607353%
KS5	Atchison City, Kansas	0.2261465530%
KS6	Atchison County, Kansas	0.2081347289%
KS7	Barber County, Kansas	0.0868011735%
KS8	Barton County, Kansas	0.3334574382%
KS9	Bourbon County, Kansas	0.2875114592%
KS10	Brown County, Kansas	0.1232303153%
KS11	Butler County, Kansas	0.8706438812%
KS12	Chase County, Kansas	0.0336082678%
KS14	Cherokee County, Kansas	0.3919995171%
KS17	Clay County, Kansas	0.1042947986%
KS19	Coffey County, Kansas	0.1060232980%
KS20	Comanche County, Kansas	0.0219636398%
KS21	Cowley County, Kansas	0.6897088195%
KS22	Crawford County, Kansas	0.7714110714%
KS24	Derby City, Kansas	0.5453586914%
KS25	Dickinson County, Kansas	0.3638160245%
KS26	Dodge City, Kansas	0.5788024418%
KS28	Douglas County, Kansas	1.5924288685%
KS29	Edwards County, Kansas	0.0357396506%
KS30	El Dorado City, Kansas	0.2788280508%
KS31	Elk County, Kansas	0.0499335801%
KS32	Elkhart City, Kansas	0.0460427074%
KS33	Ellis County, Kansas	0.3726150991%
KS34	Ellsworth County, Kansas	0.0784192915%
KS35	Emporia City, Kansas	0.5314129512%
KS37	Finney County, Kansas	0.7153826866%
KS38	Ford County, Kansas	0.6591551252%
KS39	Franklin County, Kansas	0.3340422689%
KS40	Garden City, Kansas	0.5639674708%
KS41	Gardner City, Kansas	0.4851729540%
KS42	Geary County, Kansas	0.4187127502%
KS43	Gove County, Kansas	0.0340631361%
KS44	Graham County, Kansas	0.0310480092%
KS45	Grant County, Kansas	0.1409572980%
KS47	Great Bend City, Kansas	0.3231811438%
KS48	Greeley County Unified Government, Kansas	0.0155434990%
KS49	Greenwood County, Kansas	0.1168768440%
KS50	Hamilton County, Kansas	0.0315158737%
KS51	Harper County, Kansas	0.0693479184%
KS52	Harvey County, Kansas	0.6829965673%
KS53	Haskell County, Kansas	0.0509842361%
KS54	Hays City, Kansas	0.4517508922%
KS55	Haysville City, Kansas	0.2470109420%
KS57	Hutchinson City, Kansas	0.8720750695%

State ID	Qualifying Subdivision	Consolidated State Allocation
KS58	Jackson County, Kansas	0.1711734320%
KS59	Jefferson County, Kansas	0.2473443746%
KS61	Johnson County, Kansas	12.0944030669%
KS62	Junction City, Kansas	0.4741551685%
KS63	Kansas City, Kansas	4.4060498188%
KS64	Kearny County, Kansas	0.0486709060%
KS65	Kingman County, Kansas	0.0906357539%
KS66	Kiowa County, Kansas	0.0319187570%
KS67	Labette County, Kansas	0.2545442897%
KS69	Lansing City, Kansas	0.2592649750%
KS70	Lawrence City, Kansas	2.1351947685%
KS71	Leavenworth City, Kansas	0.7793565010%
KS72	Leavenworth County, Kansas	1.6381480759%
KS73	Leawood City, Kansas	0.7519204801%
KS74	Lenexa City, Kansas	1.2179424409%
KS75	Liberal City, Kansas	0.4082002757%
KS78	Logan County, Kansas	0.0355057183%
KS79	Lyon County, Kansas	0.4294606379%
KS80	Manhattan City, Kansas	1.1916559134%
KS81	Manter City, Kansas	0.0039724166%
KS83	Marshall County, Kansas	0.1254396755%
KS84	McPherson City, Kansas	0.2822331538%
KS85	McPherson County, Kansas	0.3697169383%
KS86	Meade County, Kansas	0.0802482625%
KS87	Merriam City, Kansas	0.2413502294%
KS88	Miami County, Kansas	0.4462127868%
KS90	Montgomery County, Kansas	0.6274462063%
KS92	Morton County, Kansas	0.0505510276%
KS94	Neosho County, Kansas	0.3172684471%
KS95	Ness County, Kansas	0.0359735829%
KS96	Newton City, Kansas	0.4065302570%
KS98	Olathe City, Kansas	3.0725090086%
KS99	Osage County, Kansas	0.2049506509%
KS101	Ottawa City, Kansas	0.2675066256%
KS103	Overland Park City, Kansas	5.2622788811%
KS104	Pawnee County, Kansas	0.0827340421%
KS105	Phillips County, Kansas	0.0673335017%
KS106	Pittsburg City, Kansas	0.4330770471%
KS107	Pottawatomie County, Kansas	0.3212929608%
KS108	Prairie Village City, Kansas	0.4839800835%
KS109	Pratt County, Kansas	0.1817885063%
KS110	Rawlins County, Kansas	0.0326335501%
KS111	Reno County, Kansas	1.2307721233%
KS112	Republic County, Kansas	0.0589509291%
KS113	Rice County, Kansas	0.1216707669%
KS114	Riley County, Kansas	0.9513505103%
KS117	Russell County, Kansas	0.0884263937%
KS118	Salina City, Kansas	1.0036161498%
KS119	Saline County, Kansas	0.7008350540%

State ID	Qualifying Subdivision	Consolidated State Allocation
KS120	Scott County, Kansas	0.0622519732%
KS121	Sedgwick County, Kansas	10.3553321948%
KS122	Seward County, Kansas	0.4190277852%
KS123	Shawnee City, Kansas	1.4379077560%
KS124	Shawnee County, Kansas	3.5054886950%
KS125	Sheridan County, Kansas	0.0327505162%
KS126	Sherman County, Kansas	0.0750792587%
KS127	Smith County, Kansas	0.0460586624%
KS130	Stanton County, Kansas	0.0392178776%
KS131	Stevens County, Kansas	0.0700237227%
KS132	Sumner County, Kansas	0.2934290296%
KS133	Thomas County, Kansas	0.1000970142%
KS134	Topeka City, Kansas	2.7014829146%
KS135	Trego County, Kansas	0.0358436205%
KS136	Ulysses City, Kansas	0.1478592097%
KS137	Wabaunsee County, Kansas	0.1375513777%
KS138	Wallace County, Kansas	0.0199622194%
KS139	Washington County, Kansas	0.0705305759%
KS140	Wichita City, Kansas	10.4437497448%
KS141	Wichita County, Kansas	0.0269541947%
KS142	Wilson County, Kansas	0.1086745303%
KS143	Winfield City, Kansas	0.2560767576%
KS145	Abilene City, Kansas	0.1327990164%
KS146	Anthony City, Kansas	0.0440711418%
KS147	Augusta City, Kansas	0.2017035526%
KS148	Baxter Springs City, Kansas	0.0844335409%
KS149	Bel Aire City, Kansas	0.1836803642%
KS150	Belleville City, Kansas	0.0399286280%
KS151	Beloit City, Kansas	0.0772980066%
KS152	Bentley City, Kansas	0.0111696053%
KS153	Benton City, Kansas	0.0187605992%
KS154	Bonner Springs City, Kansas	0.1727710215%
KS155	Burlingame City, Kansas	0.0191726818%
KS156	Burrton City, Kansas	0.0185220252%
KS157	Caney City, Kansas	0.0422493033%
KS158	Chanute City, Kansas	0.1950017894%
KS159	Cheney City, Kansas	0.0471292279%
KS160	Coffeyville City, Kansas	0.1988623520%
KS161	Colby City, Kansas	0.1152746647%
KS162	Concordia City, Kansas	0.1064040461%
KS163	Edwardsville City, Kansas	0.0976201818%
KS164	Ellsworth City, Kansas	0.0636559061%
KS165	Enterprise City, Kansas	0.0167652523%
KS166	Eudora City, Kansas	0.1386549260%
KS167	Fairway City, Kansas	0.0859517397%
KS168	Fall River City, Kansas	0.0030797747%
KS169	Fort Scott City, Kansas	0.1658740613%
KS170	Galena City, Kansas	0.0612484766%
KS171	Garden Plain City, Kansas	0.0197799613%

State ID	Qualifying Subdivision	Consolidated State Allocation
KS172	Garnett City, Kansas	0.0706613091%
KS173	Goddard City, Kansas	0.1076186052%
KS174	Halstead City, Kansas	0.0439843876%
KS175	Harper City, Kansas	0.0280433004%
KS176	Herington City, Kansas	0.0485823611%
KS177	Hiawatha City, Kansas	0.0670393205%
KS178	Highland City, Kansas	0.0213849143%
KS179	Hillsboro City, Kansas	0.0599037863%
KS180	Hoisington City, Kansas	0.0531803345%
KS181	Hugoton City, Kansas	0.0797705018%
KS182	Humboldt City, Kansas	0.0385622491%
KS183	Independence City, Kansas	0.1827043793%
KS184	Iola City, Kansas	0.1141685485%
KS185	Johnson City City, Kansas	0.0286505799%
KS186	Kechi City, Kansas	0.0457411605%
KS187	Kingman City, Kansas	0.0599688519%
KS188	Leoti City, Kansas	0.0307977467%
KS189	Lincoln Center City, Kansas	0.0257876908%
KS190	Longton City, Kansas	0.0066366975%
KS191	Maize City, Kansas	0.1142336141%
KS192	Marysville City, Kansas	0.0705094892%
KS193	Meade City, Kansas	0.0329449136%
KS194	Medicine Lodge City, Kansas	0.0391261515%
KS195	Mission City, Kansas	0.2141310941%
KS196	Mission Hills City, Kansas	0.0766256614%
KS197	Moundridge City, Kansas	0.0403623991%
KS198	Mount Hope City, Kansas	0.0174809746%
KS199	Neodesha City, Kansas	0.0479533930%
KS200	North Newton City, Kansas	0.0382152322%
KS201	Norton City, Kansas	0.0587542929%
KS202	Oakley City, Kansas	0.0440277647%
KS203	Osawatomie City, Kansas	0.0915907637%
KS204	Park City City, Kansas	0.1722721848%
KS205	Parsons City, Kansas	0.2052387869%
KS206	Phillipsburg City, Kansas	0.0524863008%
KS207	Pleasanton City, Kansas	0.0251153456%
KS208	Pratt City, Kansas	0.1401731248%
KS209	Rantoul City, Kansas	0.0040557596%
KS210	Roeland Park City, Kansas	0.1442722615%
KS211	Russell City, Kansas	0.0950609324%
KS212	Sabetha City, Kansas	0.0553491899%
KS213	Satanta City, Kansas	0.0243128691%
KS214	Scott City, Kansas	0.0810284379%
KS215	Sedgwick City, Kansas	0.0359379341%
KS216	Spring Hill City, Kansas	0.1707106089%
KS217	Sterling City, Kansas	0.0471942936%
KS218	Sublette City, Kansas	0.0287156456%
KS219	Syracuse City, Kansas	0.0353740316%
KS220	Tonganoxie City, Kansas	0.1234078725%

State ID	Qualifying Subdivision	Consolidated State Allocation
KS221	Tribune City, Kansas	0.0157025131%
KS222	Valley Falls City, Kansas	0.0249852143%
KS223	Wakeeney City, Kansas	0.0376947069%
KS224	Wamego City, Kansas	0.1023265980%
KS225	Washington City, Kansas	0.0230983101%
KS226	Weir City, Kansas	0.0137505433%
KS227	Wellington City, Kansas	0.1637485830%
KS228	Westwood City, Kansas	0.0356126057%
KS229	Wilson City, Kansas	0.0154639390%
KS230	Wyandotte County, Kansas	3.2916925050%

State ID	Qualifying Subdivision	Consolidated State Allocation
KY1	Adair County, Kentucky	0.2072149972%
KY2	Allen County, Kentucky	0.3652932746%
KY3	Anderson County, Kentucky	0.3621159370%
KY4	Ashland City, Kentucky	0.9834499202%
KY5	Ballard County, Kentucky	0.1275818571%
KY6	Bardstown City, Kentucky	0.2352870373%
KY7	Barren County, Kentucky	0.3122030586%
KY8	Bath County, Kentucky	0.1600781328%
KY9	Bell County, Kentucky	0.6418579913%
KY12	Berea City, Kentucky	0.1673960319%
KY13	Boone County, Kentucky	2.0430819725%
KY14	Bourbon County, Kentucky	0.2554835051%
KY15	Bowling Green City, Kentucky	0.6707865957%
KY16	Boyd County, Kentucky	0.8927787584%
KY17	Boyle County, Kentucky	0.3790292999%
KY18	Bracken County, Kentucky	0.1275577166%
KY19	Breathitt County, Kentucky	0.5390554414%
KY20	Breckinridge County, Kentucky	0.3244963382%
KY22	Bullitt County, Kentucky	1.0630204077%
KY23	Butler County, Kentucky	0.1624898322%
KY24	Caldwell County, Kentucky	0.1441008473%
KY25	Calloway County, Kentucky	0.0270405279%
KY26	Campbell County, Kentucky	1.0519698931%
KY27	Campbellsville City, Kentucky	0.2769609681%
KY28	Carlisle County, Kentucky	0.0604084438%
KY29	Carroll County, Kentucky	0.2541479356%
KY30	Carter County, Kentucky	0.6015849596%
KY31	Casey County, Kentucky	0.2668572392%
KY32	Christian County, Kentucky	0.4386166388%
KY33	Clark County, Kentucky	0.6110238861%
KY34	Clay County, Kentucky	0.7834161044%
KY35	Clinton County, Kentucky	0.3920484376%
KY36	Columbia City, Kentucky	0.0941274300%
KY37	Covington City, Kentucky	1.7146827203%
KY38	Crittenden County, Kentucky	0.2010231527%
KY39	Cumberland County, Kentucky	0.1857249004%
KY40	Danville City, Kentucky	0.2799464970%
KY41	Daviess County, Kentucky	1.1263935276%
KY42	Edmonson County, Kentucky	0.1884368528%
KY44	Elliott County, Kentucky	0.1458221479%
KY45	Erlanger City, Kentucky	0.3397777298%
KY46	Estill County, Kentucky	0.4049309515%
KY47	Fleming County, Kentucky	0.1823914480%
KY48	Florence City, Kentucky	0.7389020512%
KY49	Floyd County, Kentucky	1.9179322449%
KY50	Fort Thomas City, Kentucky	0.3651296923%
KY51	Frankfort City, Kentucky	0.4254271088%
KY52	Franklin County, Kentucky	0.4438483122%
KY53	Fulton County, Kentucky	0.1040009320%

State ID	Qualifying Subdivision	Consolidated State Allocation
KY54	Gallatin County, Kentucky	0.2347861459%
KY55	Garrard County, Kentucky	0.3127117464%
KY56	Georgetown City, Kentucky	0.2129888920%
KY57	Glasgow City, Kentucky	0.4100978120%
KY58	Grant County, Kentucky	0.5343736918%
KY59	Graves County, Kentucky	0.2447866907%
KY60	Grayson City, Kentucky	0.1405700912%
KY61	Grayson County, Kentucky	0.4371371187%
KY62	Green County, Kentucky	0.1363993307%
KY64	Greenup County, Kentucky	0.6872346204%
KY65	Hancock County, Kentucky	0.1001482246%
KY66	Hardin County, Kentucky	1.6677965130%
KY68	Harlan County, Kentucky	0.9236857078%
KY69	Harrison County, Kentucky	0.2078604027%
KY70	Hart County, Kentucky	0.2333469695%
KY71	Henderson City, Kentucky	0.5644511762%
KY72	Henderson County, Kentucky	0.3796057595%
KY73	Henry County, Kentucky	0.2263086115%
KY74	Hickman County, Kentucky	0.0533625713%
KY76	Hopkins County, Kentucky	0.5493362318%
KY77	Hopkinsville City, Kentucky	0.5662686160%
KY79	Independence City, Kentucky	0.1255237640%
KY81	Jackson County, Kentucky	0.1930879337%
KY83	Jefferson County, Kentucky	14.4939132925%
KY84	Jeffersontown City, Kentucky	0.1981991396%
KY85	Jenkins City, Kentucky	0.0688654541%
KY86	Jessamine County, Kentucky	0.6407795601%
KY87	Johnson County, Kentucky	0.6400798620%
KY88	Kenton County, Kentucky	2.5731398261%
KY89	Knott County, Kentucky	0.4910894879%
KY90	Knox County, Kentucky	0.8060755114%
KY91	Larue County, Kentucky	0.1917133825%
KY92	Laurel County, Kentucky	0.9215642107%
KY93	Lawrence County, Kentucky	0.4474957316%
KY94	Lawrenceburg City, Kentucky	0.0804801232%
KY95	Lee County, Kentucky	0.2235931366%
KY96	Leslie County, Kentucky	0.5525464926%
KY97	Letcher County, Kentucky	0.6327552468%
KY98	Lewis County, Kentucky	0.2492484050%
KY99	Lexington-Fayette Urban County, Kentucky	6.2597070666%
KY100	Lincoln County, Kentucky	0.4109182594%
KY101	Livingston County, Kentucky	0.2056037847%
KY102	Logan County, Kentucky	0.3022584972%
KY103	London City, Kentucky	0.1961505806%
KY106	Lyndon City, Kentucky	0.0748780766%
KY107	Lyon County, Kentucky	0.1367346673%
KY108	Madison County, Kentucky	1.1073052673%
KY109	Madisonville City, Kentucky	0.3927355489%

State ID	Qualifying Subdivision	Consolidated State Allocation
KY110	Magoffin County, Kentucky	0.3084779576%
KY111	Manchester City, Kentucky	0.1800397241%
KY112	Marion County, Kentucky	0.2018769929%
KY113	Marshall County, Kentucky	0.6110803392%
KY114	Martin County, Kentucky	0.4692913886%
KY115	Mason County, Kentucky	0.1741746215%
KY116	McCracken County, Kentucky	0.3377504933%
KY117	McCreary County, Kentucky	0.3011869230%
KY118	McLean County, Kentucky	0.1433881867%
KY119	Meade County, Kentucky	0.3762152436%
KY120	Menifee County, Kentucky	0.1152561711%
KY121	Mercer County, Kentucky	0.2841928256%
KY122	Metcalfe County, Kentucky	0.1167070889%
KY123	Monroe County, Kentucky	0.2890192303%
KY124	Montgomery County, Kentucky	0.5746052526%
KY125	Morehead City, Kentucky	0.1176937487%
KY126	Morgan County, Kentucky	0.0505889526%
KY127	Morganfield City, Kentucky	0.1082087956%
KY129	Muhlenberg County, Kentucky	0.5338036196%
KY130	Murray City, Kentucky	0.5765962314%
KY131	Nelson County, Kentucky	0.4816564321%
KY132	Newport City, Kentucky	0.7312996326%
KY133	Nicholas County, Kentucky	0.1324383199%
KY134	Nicholasville City, Kentucky	0.3723153354%
KY135	Ohio County, Kentucky	0.4467150643%
KY136	Oldham County, Kentucky	0.7333447161%
KY137	Owen County, Kentucky	0.2198857418%
KY138	Owensboro City, Kentucky	0.5118319344%
KY139	Owsley County, Kentucky	0.1294761331%
KY140	Paducah City, Kentucky	1.1041080161%
KY141	Paintsville City, Kentucky	0.3642660363%
KY142	Pendleton County, Kentucky	0.3094900729%
KY143	Perry County, Kentucky	1.4848386091%
KY144	Pike County, Kentucky	1.9294441527%
KY145	Pineville City, Kentucky	0.0736606264%
KY147	Powell County, Kentucky	0.5788951657%
KY148	Prestonsburg City, Kentucky	0.4197933602%
KY149	Pulaski County, Kentucky	0.8723902940%
KY151	Richmond City, Kentucky	0.5069051167%
KY152	Robertson County, Kentucky	0.0346199801%
KY153	Rockcastle County, Kentucky	0.4380501830%
KY154	Rowan County, Kentucky	0.4245058255%
KY155	Russell City, Kentucky	0.1455248537%
KY156	Russell County, Kentucky	0.5599110288%
KY158	Scott County, Kentucky	0.6332443967%
KY159	Shelby County, Kentucky	0.5093783884%
KY160	Shelbyville City, Kentucky	0.1168374662%
KY161	Shepherdsville City, Kentucky	0.1717991328%
KY162	Shively City, Kentucky	0.1040826057%

State ID	Qualifying Subdivision	Consolidated State Allocation
KY163	Simpson County, Kentucky	0.2049906448%
KY164	Somerset City, Kentucky	0.3108498299%
KY166	Spencer County, Kentucky	0.2447695951%
KY167	St. Matthews City, Kentucky	0.1131834246%
KY168	Taylor County, Kentucky	0.1908446071%
KY169	Todd County, Kentucky	0.1788746408%
KY170	Trigg County, Kentucky	0.2047738501%
KY171	Trimble County, Kentucky	0.1174427629%
KY172	Union County, Kentucky	0.2531192882%
KY175	Warren County, Kentucky	0.9893070387%
KY176	Washington County, Kentucky	0.1549834119%
KY177	Wayne County, Kentucky	0.3477965951%
KY178	Webster County, Kentucky	0.2371207742%
KY179	West Liberty City, Kentucky	0.1691975502%
KY181	Whitley County, Kentucky	1.5794132485%
KY182	Winchester City, Kentucky	0.4646999075%
KY183	Wolfe County, Kentucky	0.2600699609%
KY184	Woodford County, Kentucky	0.2675359435%
KY186	Albany City, Kentucky	0.1264298304%
KY187	Alexandria City, Kentucky	0.1080131826%
KY192	Barbourville City, Kentucky	0.0730470168%
KY193	Beattyville City, Kentucky	0.1448233239%
KY195	Bellevue City, Kentucky	0.0965704087%
KY205	Carrollton City, Kentucky	0.0887635005%
KY206	Catlettsburg City, Kentucky	0.1263485793%
KY207	Cave City City, Kentucky	0.0700133478%
KY208	Central City City, Kentucky	0.0844674819%
KY211	Cold Spring City, Kentucky	0.0750717640%
KY212	Corbin City, Kentucky	0.2036058550%
KY215	Crittenden City, Kentucky	0.1485297325%
KY216	Cynthiana City, Kentucky	0.2429917006%
KY218	Dayton City, Kentucky	0.1369669607%
KY220	Dry Ridge City, Kentucky	0.1124383105%
KY222	Edgewood City, Kentucky	0.0997328111%
KY228	Flatwoods City, Kentucky	0.0815134672%
KY230	Flemingsburg City, Kentucky	0.0974474500%
KY231	Fort Mitchell City, Kentucky	0.1045834032%
KY232	Fort Wright City, Kentucky	0.0888485558%
KY233	Franklin City, Kentucky	0.1059281781%
KY238	Harrodsburg City, Kentucky	0.1433328138%
KY240	Hazard City, Kentucky	0.2853655644%
KY242	Highland Heights City, Kentucky	0.1099203272%
KY247	Irvine City, Kentucky	0.0767877105%
KY252	La Grange City, Kentucky	0.0727992716%
KY255	Lebanon City, Kentucky	0.1122041854%
KY256	Leitchfield City, Kentucky	0.1135380642%
KY258	Louisa City, Kentucky	0.0866211036%
KY259	Ludlow City, Kentucky	0.0669617849%
KY261	Martin City, Kentucky	0.2943288201%

State ID	Qualifying Subdivision	Consolidated State Allocation
KY262	Mayfield City, Kentucky	0.2929381596%
KY263	Maysville City, Kentucky	0.1796298526%
KY264	Middlesborough City, Kentucky	0.9627869870%
KY267	Morgantown City, Kentucky	0.1066840944%
KY268	Mount Sterling City, Kentucky	0.1357736978%
KY269	Mount Vernon City, Kentucky	0.1195254191%
KY275	Owingsville City, Kentucky	0.1120741368%
KY276	Paris City, Kentucky	0.1357848757%
KY278	Pikeville City, Kentucky	0.9232553122%
KY280	Princeton City, Kentucky	0.1044295429%
KY283	Russellville City, Kentucky	0.1019054071%
KY286	Southgate City, Kentucky	0.0952700635%
KY288	Stanford City, Kentucky	0.0735805495%
KY291	Taylor Mill City, Kentucky	0.1020398235%
KY294	Union City, Kentucky	0.1260059161%
KY295	Versailles City, Kentucky	0.1700135829%
KY297	Walton City, Kentucky	0.0725720505%
KY301	Wilder City, Kentucky	0.1271712342%
KY302	Williamsburg City, Kentucky	0.2511273232%
KY303	Williamstown City, Kentucky	0.1029710636%

State ID	Qualifying Subdivision	Consolidated State Allocation
LA2	Acadia Parish, Louisiana	
LA3	Alexandria City, Louisiana	
LA4	Allen Parish, Louisiana	
LA5	Ascension Parish, Louisiana	
LA6	Assumption Parish, Louisiana	
LA7	Avoyelles Parish, Louisiana	
LA9	Baldwin Town, Louisiana	
LA10	Bastrop City, Louisiana	
LA12	Beauregard Parish, Louisiana	
LA13	Berwick Town, Louisiana	
LA14	Bienville Parish, Louisiana	
LA15	Bogalusa City, Louisiana	
LA16	Bossier City, Louisiana	
LA17	Bossier Parish, Louisiana	
LA19	Caddo Parish, Louisiana	
LA20	Calcasieu Parish, Louisiana	
LA21	Caldwell Parish, Louisiana	
LA22	Cameron Parish, Louisiana	
LA23	Catahoula Parish, Louisiana	
LA25	Claiborne Parish, Louisiana	
LA26	Concordia Parish, Louisiana	
LA27	Covington City, Louisiana	Allocations in Louisiana
LA29	De Soto Parish, Louisiana	will be made in
LA30	Delhi Town, Louisiana	accordance with the
LA32	Donaldsonville City, Louisiana	Louisiana State-Local
LA33	East Carroll Parish, Louisiana	Government Opioid
LA34	East Feliciana Parish, Louisiana	Litigation Memorandum
LA35	Eunice City, Louisiana	of Understanding.
LA36	Evangeline Parish, Louisiana	
LA37	Ferriday Town, Louisiana	
LA38	Franklin City, Louisiana	
LA39	Franklin Parish, Louisiana	
LA41	Gramercy Town, Louisiana	
LA42	Grant Parish, Louisiana	
LA43	Gretna City, Louisiana	
LA46	Iberia Parish, Louisiana	
LA47	Iberville Parish, Louisiana	
LA48	Jackson Parish, Louisiana	
LA49	Jean Lafitte Town, Louisiana	
LA50	Jefferson Davis Parish, Louisiana	
LA51	Jefferson Parish, Louisiana	
LA52	Kenner City, Louisiana	
LA54	Lafourche Parish, Louisiana	
LA55	Lake Charles City, Louisiana	
LA56	Lake Providence Town, Louisiana	
LA57	Lasalle Parish, Louisiana	
LA58	Lincoln Parish, Louisiana	
LA59	Livingston Parish, Louisiana	
LA60	Lutcher Town, Louisiana	

State ID	Qualifying Subdivision	Consolidated State Allocation
LA61	Madison Parish, Louisiana	
LA62	Madisonville Town, Louisiana	
LA63	Mandeville City, Louisiana	
LA65	Monroe City, Louisiana	
LA66	Morehouse Parish, Louisiana	
LA67	Morgan City, Louisiana	
LA68	Natchitoches City, Louisiana	
LA69	Natchitoches Parish, Louisiana	
LA70	New Iberia City, Louisiana	
LA72	New Roads City, Louisiana	
LA73	Opelousas City, Louisiana	
LA74	Ouachita Parish, Louisiana	
LA75	Patterson City, Louisiana	
LA76	Pearl River Town, Louisiana	
LA77	Pineville City, Louisiana	
LA78	Plaquemines Parish, Louisiana	
LA79	Pointe Coupee Parish, Louisiana	
LA80	Rapides Parish, Louisiana	
LA81	Red River Parish, Louisiana	
LA82	Richland Parish, Louisiana	
LA83	Richwood Town, Louisiana	
LA85	Sabine Parish, Louisiana	Allocations in Louisiana
LA86	Shreveport City, Louisiana	will be made in
LA87	Slidell City, Louisiana	accordance with the
LA88	St Bernard Parish, Louisiana	Louisiana State-Local
LA89	St Charles Parish, Louisiana	Government Opioid
LA90	St Helena Parish, Louisiana	Litigation Memorandum
LA91	St James Parish, Louisiana	of Understanding.
LA92	St John The Baptist Parish, Louisiana	
LA93	St Landry Parish, Louisiana	
LA94	St Martin Parish, Louisiana	
LA95	St Mary Parish, Louisiana	
LA96	St Tammany Parish, Louisiana	
LA97	St. Martinville City, Louisiana	
LA99	Tangipahoa Parish, Louisiana	
LA100	Tensas Parish, Louisiana	
LA102	Union Parish, Louisiana	
LA103	Vermilion Parish, Louisiana	
LA104	Vernon Parish, Louisiana	
LA105	Washington Parish, Louisiana	
LA106	Webster Parish, Louisiana	
LA107	West Baton Rouge Parish, Louisiana	
LA108	West Carroll Parish, Louisiana	
LA109	West Feliciana Parish, Louisiana	
LA110	West Monroe City, Louisiana	
LA111	Westwego City, Louisiana	
LA112	Winn Parish, Louisiana	

State ID	Qualifying Subdivision	Consolidated State Allocation
LA115	East Baton Rouge Parish, Louisiana	
LA116	Lafayette Parish, Louisiana	
LA117	Orleans Parish, Louisiana	
LA118	Terrebonne Parish, Louisiana	
LA119	Sheriff of Acadia Parish, Louisiana	
LA120	Sheriff of Allen Parish, Louisiana	
LA121	Sheriff of Ascension Parish, Louisiana	
LA122	Sheriff of Assumption Parish, Louisiana	
LA123	Sheriff of Avoyelles Parish, Louisiana	
LA124	Sheriff of Beauregard Parish, Louisiana	
LA125	Sheriff of Bienville Parish, Louisiana	
LA126	Sheriff of Bossier Parish, Louisiana	
LA127	Sheriff of Caddo Parish, Louisiana	
LA128	Sheriff of Calcasieu Parish, Louisiana	Allocations in Louisiana will be made in accordance with the Louisiana State-Local Government Opioid Litigation Memorandum of Understanding.
LA129	Sheriff of Caldwell Parish, Louisiana	
LA130	Sheriff of Cameron Parish, Louisiana	
LA131	Sheriff of Catahoula Parish, Louisiana	
LA132	Sheriff of Claiborne Parish, Louisiana	
LA133	Sheriff of Concordia Parish, Louisiana	
LA134	Sheriff of De Soto Parish, Louisiana	
LA135	Sheriff of East Baton Rouge Parish, Louisiana	
LA136	Sheriff of East Carroll Parish, Louisiana	
LA137	Sheriff of East Feliciana Parish, Louisiana	
LA138	Sheriff of Evangeline Parish, Louisiana	
LA139	Sheriff of Franklin Parish, Louisiana	
LA140	Sheriff of Grant Parish, Louisiana	
LA141	Sheriff of Iberia Parish, Louisiana	
LA142	Sheriff of Iberville Parish, Louisiana	

State ID	Qualifying Subdivision	Consolidated State Allocation
LA143	Sheriff of Jackson Parish, Louisiana	
LA144	Sheriff of Jefferson Davis Parish, Louisiana	
LA145	Sheriff of Jefferson Parish, Louisiana	
LA146	Sheriff of Lafayette Parish, Louisiana	
LA147	Sheriff of Lafourche Parish, Louisiana	
LA148	Sheriff of Lasalle Parish, Louisiana	
LA149	Sheriff of Lincoln Parish, Louisiana	
LA150	Sheriff of Livingston Parish, Louisiana	
LA151	Sheriff of Madison Parish, Louisiana	
LA152	Sheriff of Morehouse Parish, Louisiana	
LA153	Sheriff of Natchitoches Parish, Louisiana	Allocations in Louisiana will be made in accordance with the Louisiana State-Local Government Opioid Litigation Memorandum of Understanding.
LA154	Sheriff of Orleans Parish, Louisiana	
LA155	Sheriff of Ouachita Parish, Louisiana	
LA156	Sheriff of Plaquemines Parish, Louisiana	
LA157	Sheriff of Pointe Coupee Parish, Louisiana	
LA158	Sheriff of Rapides Parish, Louisiana	
LA159	Sheriff of Red River Parish, Louisiana	
LA160	Sheriff of Richland Parish, Louisiana	
LA161	Sheriff of Sabine Parish, Louisiana	
LA162	Sheriff of St Bernard Parish, Louisiana	
LA163	Sheriff of St Charles Parish, Louisiana	
LA164	Sheriff of St Helena Parish, Louisiana	
LA165	Sheriff of St James Parish, Louisiana	
LA166	Sheriff of St John The Baptist Parish, Louisiana	
LA167	Sheriff of St Landry Parish, Louisiana	

State ID	Qualifying Subdivision	Consolidated State Allocation
LA168	Sheriff of St Martin Parish, Louisiana	
LA169	Sheriff of St Mary Parish, Louisiana	
LA170	Sheriff of St Tammany Parish, Louisiana	
LA171	Sheriff of Tangipahoa Parish, Louisiana	
LA172	Sheriff of Tensas Parish, Louisiana	
LA173	Sheriff of Terrebonne Parish, Louisiana	Allocations in Louisiana will be made in accordance with the Louisiana State-Local Government Opioid Litigation Memorandum of Understanding.
LA174	Sheriff of Union Parish, Louisiana	
LA175	Sheriff of Vermilion Parish, Louisiana	
LA176	Sheriff of Vernon Parish, Louisiana	
LA177	Sheriff of Washington Parish, Louisiana	
LA178	Sheriff of Webster Parish, Louisiana	
LA179	Sheriff of West Baton Rouge Parish, Louisiana	
LA180	Sheriff of West Carroll Parish, Louisiana	
LA181	Sheriff of West Feliciana Parish, Louisiana	
LA182	Sheriff of Winn Parish, Louisiana	

State ID	Qualifying Subdivision	Consolidated State Allocation
ME1	Androscoggin County, Maine	1.6799535986%
ME2	Aroostook County, Maine	4.0537116218%
ME3	Auburn City, Maine	2.6283332826%
ME4	Augusta City, Maine	3.6779545807%
ME5	Bangor City, Maine	5.2042873123%
ME6	Biddeford City, Maine	2.7393997300%
ME7	Brunswick Town, Maine	1.6113929261%
ME8	Calais City, Maine	0.8369049504%
ME9	Cumberland County, Maine	3.5025701951%
ME10	Falmouth Town, Maine	1.2353278939%
ME11	Franklin County, Maine	1.9717572454%
ME12	Gorham Town, Maine	1.4582940317%
ME13	Hancock County, Maine	3.8494340111%
ME14	Kennebec County, Maine	4.9959268385%
ME15	Kennebunk Town, Maine	0.2185679049%
ME16	Knox County, Maine	2.1010369789%
ME17	Lewiston City, Maine	4.3451006968%
ME18	Lincoln County, Maine	2.1621727981%
ME19	Orono Town, Maine	0.2094180830%
ME20	Oxford County, Maine	3.8454418782%
ME21	Penobscot County, Maine	6.7801027597%
ME22	Piscataquis County, Maine	1.2760851978%
ME23	Portland City, Maine	7.2016026249%
ME24	Rockland City, Maine	0.6184398003%
ME25	Saco City, Maine	0.4366518238%
ME26	Sagadahoc County, Maine	1.9708146889%
ME27	Sanford City, Maine	2.6908215844%
ME28	Scarborough Town, Maine	1.8363769930%
ME29	Somerset County, Maine	3.6977198467%
ME30	South Portland City, Maine	2.2275994495%
ME31	Standish Town, Maine	0.0664145731%
ME32	Waldo County, Maine	2.4723925078%
ME33	Washington County, Maine	2.6998574469%
ME34	Waterville City, Maine	2.8132809688%
ME35	Wells Town, Maine	0.2541311729%
ME36	Westbrook City, Maine	1.5416150467%
ME37	Windham Town, Maine	0.1935482073%
ME38	York County, Maine	6.7950503019%
ME39	York Town, Maine	2.1005084476%

State ID	Qualifying Subdivision	Consolidated State Allocation
MD1	Aberdeen City, Maryland	0.0372796529%
MD2	Allegany County, Maryland	1.6120411494%
MD3	Annapolis City, Maryland	0.2413230958%
MD4	Anne Arundel County, Maryland	9.5850095156%
MD5	Baltimore City, Maryland	20.9970334354%
MD6	Baltimore County, Maryland	17.7565394434%
MD7	Bel Air Town, Maryland	0.0322364280%
MD8	Berlin Town, Maryland	0.0109236186%
MD9	Bowie City, Maryland	0.0263270946%
MD10	Calvert County, Maryland	1.6948343688%
MD11	Cambridge City, Maryland	0.0196746185%
MD12	Caroline County, Maryland	0.5865017850%
MD13	Carroll County, Maryland	2.9605563001%
MD14	Cecil County, Maryland	3.7958577634%
MD15	Charles County, Maryland	1.9663409179%
MD16	Charlestown, Maryland	0.0013846587%
MD17	College Park City, Maryland	0.0050334845%
MD18	Cottage City Town, Maryland	0.0015972023%
MD19	Cumberland City, Maryland	0.1627132426%
MD20	Dorchester County, Maryland	0.3951913125%
MD21	Easton Town, Maryland	0.0630108370%
MD22	Elkton Town, Maryland	0.0884110160%
MD23	Forest Heights Town, Maryland	0.0014812182%
MD24	Frederick City, Maryland	0.1530889274%
MD25	Frederick County, Maryland	3.4957333212%
MD26	Frostburg City, Maryland	0.0194678741%
MD27	Gaithersburg City, Maryland	0.0243966914%
MD28	Garrett County, Maryland	0.3513434690%
MD29	Grantsville Town, Maryland	0.0002207076%
MD30	Greenbelt City, Maryland	0.0369938028%
MD31	Hagerstown City, Maryland	0.1829328174%
MD32	Harford County, Maryland	5.1958110720%
MD33	Havre De Grace City, Maryland	0.0458009931%
MD34	Howard County, Maryland	3.2487213744%
MD35	Hyattsville City, Maryland	0.0127377562%
MD36	Kent County, Maryland	0.4683852152%
MD37	Laurel City, Maryland	0.0300516480%
MD38	Montgomery County, Maryland	8.5574378958%
MD39	Mountain Lake Park Town, Maryland	0.0001004445%
MD40	New Carrollton City, Maryland	0.0062727689%
MD41	North Brentwood Town, Maryland	0.0000662686%
MD42	North East Town, Maryland	0.0183814522%
MD43	Oakland Town, Maryland	0.0011777453%
MD44	Perryville Town, Maryland	0.0184160785%
MD45	Prince Georges County, Maryland	7.1382650655%
MD46	Queen Annes County, Maryland	0.7381792535%
MD47	Rockville City, Maryland	0.0611045878%
MD48	Salisbury City, Maryland	0.1347806691%

State ID	Qualifying Subdivision	Consolidated State Allocation
MD49	Seat Pleasant City, Maryland	0.0040128808%
MD50	Somerset County, Maryland	0.3875128839%
MD51	St Marys County, Maryland	1.3684562511%
MD52	Takoma Park City, Maryland	0.0195596479%
MD53	Talbot County, Maryland	0.4896824850%
MD54	Upper Marlboro Town, Maryland	0.0009443695%
MD55	Vienna Town, Maryland	0.0001582676%
MD56	Washington County, Maryland	3.0474490505%
MD57	Westminster City, Maryland	0.0440087573%
MD58	Wicomico County, Maryland	1.6694422411%
MD59	Worcester County, Maryland	0.9876031064%

State ID	Qualifying Subdivision	Consolidated State Allocation
MA1	Abington Town, Massachusetts	0.2400899791%
MA2	Acton Town, Massachusetts	0.1586479343%
MA3	Acushnet Town, Massachusetts	0.1547305792%
MA4	Adams Town, Massachusetts	0.0189731986%
MA5	Agawam Town City, Massachusetts	0.4341901730%
MA6	Alford Town, Massachusetts	0.0007449491%
MA7	Amesbury Town City, Massachusetts	0.2580959424%
MA8	Amherst Town, Massachusetts	0.3675897982%
MA9	Andover Town, Massachusetts	0.7102727131%
MA10	Aquinnah Town, Massachusetts	0.0049293930%
MA11	Arlington Town, Massachusetts	0.3350233330%
MA12	Ashburnham Town, Massachusetts	0.0140160133%
MA13	Ashby Town, Massachusetts	0.0069876989%
MA14	Ashfield Town, Massachusetts	0.0027296132%
MA15	Ashland Town, Massachusetts	0.1613930923%
MA16	Athol Town, Massachusetts	0.0359559233%
MA17	Attleboro City, Massachusetts	0.9357205930%
MA18	Auburn Town, Massachusetts	0.3036683195%
MA19	Avon Town, Massachusetts	0.0739889948%
MA20	Ayer Town, Massachusetts	0.0179210686%
MA21	Barnstable County, Massachusetts	0.0639482242%
MA22	Barnstable Town City, Massachusetts	0.8578313582%
MA23	Barre Town, Massachusetts	0.0096522017%
MA24	Becket Town, Massachusetts	0.0067279376%
MA25	Bedford Town, Massachusetts	0.1982937972%
MA26	Belchertown, Massachusetts	0.3492785905%
MA27	Bellingham Town, Massachusetts	0.1961076781%
MA28	Belmont Town, Massachusetts	0.2420315678%
MA29	Berkley Town, Massachusetts	0.1212759115%
MA30	Berlin Town, Massachusetts	0.0397753511%
MA31	Bernardston Town, Massachusetts	0.0040751589%
MA32	Beverly City, Massachusetts	0.4801566147%
MA33	Billerica Town, Massachusetts	0.3870913124%
MA34	Blackstone Town, Massachusetts	0.0221473318%
MA35	Blandford Town, Massachusetts	0.0009007116%
MA36	Bolton Town, Massachusetts	0.0110088433%
MA37	Boston City, Massachusetts	10.5767780349%
MA38	Bourne Town, Massachusetts	0.3783946742%
MA39	Boxborough Town, Massachusetts	0.0399298051%
MA40	Boxford Town, Massachusetts	0.0912309051%
MA41	Boylston Town, Massachusetts	0.0562367737%
MA42	Braintree Town City, Massachusetts	0.4457226214%
MA43	Brewster Town, Massachusetts	0.1284470083%
MA44	Bridgewater Town, Massachusetts	0.0570448443%
MA45	Brimfield Town, Massachusetts	0.0355644757%

State ID	Qualifying Subdivision	Consolidated State Allocation
MA46	Bristol County, Massachusetts	0.1015083030%
MA47	Brockton City, Massachusetts	2.1170344615%
MA48	Brookfield Town, Massachusetts	0.0372953453%
MA49	Brookline Town, Massachusetts	0.8244968622%
MA50	Buckland Town, Massachusetts	0.0031396937%
MA51	Burlington Town, Massachusetts	0.3034752912%
MA52	Cambridge City, Massachusetts	4.3053779748%
MA53	Canton Town, Massachusetts	0.2909840866%
MA54	Carlisle Town, Massachusetts	0.0526144568%
MA55	Carver Town, Massachusetts	0.2179547901%
MA56	Charlemont Town, Massachusetts	0.0066765925%
MA57	Charlton Town, Massachusetts	0.0305379405%
MA58	Chatham Town, Massachusetts	0.1685335181%
MA59	Chelmsford Town, Massachusetts	0.3162632088%
MA60	Chelsea City, Massachusetts	0.5236031155%
MA61	Cheshire Town, Massachusetts	0.0015830626%
MA62	Chester Town, Massachusetts	0.0096828727%
MA63	Chesterfield Town, Massachusetts	0.0168042468%
MA64	Chicopee City, Massachusetts	0.8816952708%
MA65	Chilmark Town, Massachusetts	0.0062328576%
MA66	Clarksburg Town, Massachusetts	0.0303920178%
MA67	Clinton Town, Massachusetts	0.2371744557%
MA68	Cohasset Town, Massachusetts	0.1430861241%
MA69	Colrain Town, Massachusetts	0.0016018525%
MA70	Concord Town, Massachusetts	0.1749597704%
MA71	Conway Town, Massachusetts	0.0354590115%
MA72	Cummington Town, Massachusetts	0.0009757143%
MA73	Dalton Town, Massachusetts	0.0123034626%
MA74	Danvers Town, Massachusetts	0.4037368656%
MA75	Dartmouth Town, Massachusetts	0.5505881937%
MA76	Dedham Town, Massachusetts	0.3188835370%
MA77	Deerfield Town, Massachusetts	0.0872700035%
MA78	Dennis Town, Massachusetts	0.0970183530%
MA79	Dighton Town, Massachusetts	0.0228752705%
MA80	Douglas Town, Massachusetts	0.1659192613%
MA81	Dover Town, Massachusetts	0.0683428114%
MA82	Dracut Town, Massachusetts	0.2045887296%
MA83	Dudley Town, Massachusetts	0.0179390734%
MA84	Dukes County, Massachusetts	0.0054256244%
MA85	Dunstable Town, Massachusetts	0.0041607864%
MA86	Duxbury Town, Massachusetts	0.3742011756%
MA87	East Bridgewater Town, Massachusetts	0.2308047825%
MA88	East Brookfield Town, Massachusetts	0.0052365739%
MA89	East Longmeadow Town, Massachusetts	0.2715713403%
MA90	Eastham Town, Massachusetts	0.0786916528%

State ID	Qualifying Subdivision	Consolidated State Allocation
MA91	Easthampton Town City, Massachusetts	0.2670463228%
MA92	Easton Town, Massachusetts	0.5676857515%
MA93	Edgartown, Massachusetts	0.0809809332%
MA94	Egremont Town, Massachusetts	0.0050750540%
MA95	Erving Town, Massachusetts	0.0513752128%
MA96	Essex Town, Massachusetts	0.0113333487%
MA97	Everett City, Massachusetts	0.4368228534%
MA98	Fairhaven Town, Massachusetts	0.3265362625%
MA99	Fall River City, Massachusetts	2.1055901006%
MA100	Falmouth Town, Massachusetts	0.6632841320%
MA101	Fitchburg City, Massachusetts	0.6913634212%
MA102	Florida Town, Massachusetts	0.0170875086%
MA103	Foxborough Town, Massachusetts	0.2588100112%
MA104	Framingham Town, Massachusetts	0.6902310022%
MA105	Franklin Town City, Massachusetts	0.4506715894%
MA106	Freetown, Massachusetts	0.0347111837%
MA107	Gardner City, Massachusetts	0.3080580392%
MA108	Georgetown, Massachusetts	0.1361143365%
MA109	Gill Town, Massachusetts	0.0032293514%
MA110	Gloucester City, Massachusetts	0.4219402015%
MA111	Goshen Town, Massachusetts	0.0020598761%
MA112	Gosnold Town, Massachusetts	0.0011645031%
MA113	Grafton Town, Massachusetts	0.2787903277%
MA114	Granby Town, Massachusetts	0.1421420753%
MA115	Granville Town, Massachusetts	0.0205788719%
MA116	Great Barrington Town, Massachusetts	0.0238735954%
MA117	Greenfield Town City, Massachusetts	0.4522917084%
MA118	Groton Town, Massachusetts	0.0112861907%
MA119	Groveland Town, Massachusetts	0.0109548289%
MA120	Hadley Town, Massachusetts	0.1036658447%
MA121	Halifax Town, Massachusetts	0.0744074497%
MA122	Hamilton Town, Massachusetts	0.0148754814%
MA123	Hampden Town, Massachusetts	0.0086441416%
MA124	Hancock Town, Massachusetts	0.0080083205%
MA125	Hanover Town, Massachusetts	0.2979987927%
MA126	Hanson Town, Massachusetts	0.0306151413%
MA127	Hardwick Town, Massachusetts	0.0046489576%
MA128	Harvard Town, Massachusetts	0.1646144358%
MA129	Harwich Town, Massachusetts	0.2864309104%
MA130	Hatfield Town, Massachusetts	0.0627393895%
MA131	Haverhill City, Massachusetts	0.8142937865%
MA132	Hawley Town, Massachusetts	0.0002691301%
MA133	Heath Town, Massachusetts	0.0011790011%
MA134	Hingham Town, Massachusetts	0.4828724626%
MA135	Hinsdale Town, Massachusetts	0.0037015067%

State ID	Qualifying Subdivision	Consolidated State Allocation
MA136	Holbrook Town, Massachusetts	0.1222501079%
MA137	Holden Town, Massachusetts	0.0343745879%
MA138	Holland Town, Massachusetts	0.0238040885%
MA139	Holliston Town, Massachusetts	0.1672190621%
MA140	Holyoke City, Massachusetts	0.9664659552%
MA141	Hopedale Town, Massachusetts	0.1372305825%
MA142	Hopkinton Town, Massachusetts	0.2027514537%
MA143	Hubbardston Town, Massachusetts	0.0076647112%
MA144	Hudson Town, Massachusetts	0.1994512345%
MA145	Hull Town, Massachusetts	0.1954841045%
MA146	Huntington Town, Massachusetts	0.0026561285%
MA147	Ipswich Town, Massachusetts	0.2079635850%
MA148	Kingston Town, Massachusetts	0.1369378473%
MA149	Lakeville Town, Massachusetts	0.0202228058%
MA150	Lancaster Town, Massachusetts	0.0116656002%
MA151	Lanesborough Town, Massachusetts	0.0575248505%
MA152	Lawrence City, Massachusetts	1.4758837913%
MA153	Lee Town, Massachusetts	0.1519018348%
MA154	Leicester Town, Massachusetts	0.1926291380%
MA155	Lenox Town, Massachusetts	0.1609461124%
MA156	Leominster City, Massachusetts	0.7902530708%
MA157	Leverett Town, Massachusetts	0.0395342227%
MA158	Lexington Town, Massachusetts	0.5090924410%
MA159	Leyden Town, Massachusetts	0.0007689206%
MA160	Lincoln Town, Massachusetts	0.1099619285%
MA161	Littleton Town, Massachusetts	0.1043597104%
MA162	Longmeadow Town, Massachusetts	0.2992108201%
MA163	Lowell City, Massachusetts	1.0242474790%
MA164	Ludlow Town, Massachusetts	0.3042665608%
MA165	Lunenburg Town, Massachusetts	0.1916440550%
MA166	Lynn City, Massachusetts	1.5917595154%
MA167	Lynnfield Town, Massachusetts	0.2333154069%
MA168	Malden City, Massachusetts	0.4659742140%
MA169	Manchester-By-The-Sea Town, Massachusetts	0.0201100664%
MA170	Mansfield Town, Massachusetts	0.6816694002%
MA171	Marblehead Town, Massachusetts	0.3485912672%
MA172	Marion Town, Massachusetts	0.0698025620%
MA173	Marlborough City, Massachusetts	0.3668295136%
MA174	Marshfield Town, Massachusetts	0.4930551259%
MA175	Mashpee Town, Massachusetts	0.3459150927%
MA176	Mattapoisett Town, Massachusetts	0.0843720139%
MA177	Maynard Town, Massachusetts	0.1014940666%
MA178	Medfield Town, Massachusetts	0.2083772770%
MA179	Medford City, Massachusetts	0.3972200658%
MA180	Medway Town, Massachusetts	0.1940731867%
MA181	Melrose City, Massachusetts	0.2296395466%

State ID	Qualifying Subdivision	Consolidated State Allocation
MA182	Mendon Town, Massachusetts	0.0164096065%
MA183	Merrimac Town, Massachusetts	0.0100336001%
MA184	Methuen Town City, Massachusetts	0.7149217230%
MA185	Middleborough Town, Massachusetts	0.3933419654%
MA186	Middlefield Town, Massachusetts	0.0003252381%
MA187	Middleton Town, Massachusetts	0.0917093411%
MA188	Milford Town, Massachusetts	0.5323916620%
MA189	Millbury Town, Massachusetts	0.2332340712%
MA190	Millis Town, Massachusetts	0.0999797258%
MA191	Millville Town, Massachusetts	0.0062130209%
MA192	Milton Town, Massachusetts	0.3520463069%
MA193	Monroe Town, Massachusetts	0.0001025332%
MA194	Monson Town, Massachusetts	0.1266258006%
MA195	Montague Town, Massachusetts	0.0291412591%
MA196	Monterey Town, Massachusetts	0.0042137017%
MA197	Montgomery Town, Massachusetts	0.0002324400%
MA198	Mt Washington Town, Massachusetts	0.0001746048%
MA199	Nahant Town, Massachusetts	0.0355497159%
MA200	Nantucket Town, Massachusetts	0.1102324194%
MA201	Natick Town, Massachusetts	0.3421702489%
MA202	Needham Town, Massachusetts	0.4914063771%
MA203	New Ashford Town, Massachusetts	0.0002677169%
MA204	New Bedford City, Massachusetts	2.3617391681%
MA205	New Braintree Town, Massachusetts	0.0013480056%
MA206	New Marlborough Town, Massachusetts	0.0032940955%
MA207	New Salem Town, Massachusetts	0.0024476600%
MA208	Newbury Town, Massachusetts	0.0135400372%
MA209	Newburyport City, Massachusetts	0.2905748435%
MA210	Newton City, Massachusetts	1.0088865481%
MA211	Norfolk County, Massachusetts	0.0563017795%
MA212	Norfolk Town, Massachusetts	0.0892988423%
MA213	North Adams City, Massachusetts	0.3428675166%
MA214	North Andover Town, Massachusetts	0.4494773051%
MA215	North Attleborough Town, Massachusetts	0.6369959028%
MA216	North Brookfield Town, Massachusetts	0.0698725924%
MA217	North Reading Town, Massachusetts	0.1664230820%
MA218	Northampton City, Massachusetts	0.5405649568%
MA219	Northborough Town, Massachusetts	0.2422641125%

State ID	Qualifying Subdivision	Consolidated State Allocation
MA220	Northbridge Town, Massachusetts	0.2823159735%
MA221	Northfield Town, Massachusetts	0.0153010544%
MA222	Norton Town, Massachusetts	0.4563834066%
MA223	Norwell Town, Massachusetts	0.2753854817%
MA224	Norwood Town, Massachusetts	0.3412282413%
MA225	Oak Bluffs Town, Massachusetts	0.0769116887%
MA226	Oakham Town, Massachusetts	0.0026269230%
MA227	Orange Town, Massachusetts	0.1376712816%
MA228	Orleans Town, Massachusetts	0.0935051641%
MA229	Otis Town, Massachusetts	0.0035269019%
MA230	Oxford Town, Massachusetts	0.2336229019%
MA231	Palmer Town City, Massachusetts	0.1621757259%
MA232	Paxton Town, Massachusetts	0.0115100470%
MA233	Peabody City, Massachusetts	0.7162928627%
MA234	Pelham Town, Massachusetts	0.0235476246%
MA235	Pembroke Town, Massachusetts	0.3388218249%
MA236	Pepperell Town, Massachusetts	0.0102363113%
MA237	Peru Town, Massachusetts	0.0011523603%
MA238	Petersham Town, Massachusetts	0.0159775433%
MA239	Phillipston Town, Massachusetts	0.0039835646%
MA240	Pittsfield City, Massachusetts	1.1541979937%
MA241	Plainfield Town, Massachusetts	0.0004986914%
MA242	Plainville Town, Massachusetts	0.0738004154%
MA243	Plymouth County, Massachusetts	0.0008974666%
MA244	Plymouth Town, Massachusetts	1.0727134492%
MA245	Plympton Town, Massachusetts	0.0311939123%
MA246	Princeton Town, Massachusetts	0.0094015998%
MA247	Provincetown, Massachusetts	0.0895015011%
MA248	Quincy City, Massachusetts	1.0277365393%
MA249	Randolph Town, Massachusetts	0.3517891103%
MA250	Raynham Town, Massachusetts	0.0739771661%
MA251	Reading Town, Massachusetts	0.2463903024%
MA252	Rehoboth Town, Massachusetts	0.0342848256%
MA253	Revere City, Massachusetts	0.5754964378%
MA254	Richmond Town, Massachusetts	0.0346755405%
MA255	Rochester Town, Massachusetts	0.0656757963%
MA256	Rockland Town, Massachusetts	0.3048431858%
MA257	Rockport Town, Massachusetts	0.1188536886%
MA258	Rowe Town, Massachusetts	0.0242459391%
MA259	Rowley Town, Massachusetts	0.0134543050%
MA260	Royalston Town, Massachusetts	0.0020739031%
MA261	Russell Town, Massachusetts	0.0012348998%
MA262	Rutland Town, Massachusetts	0.0122272562%
MA263	Salem City, Massachusetts	0.6254547137%
MA264	Salisbury Town, Massachusetts	0.0319290215%
MA265	Sandisfield Town, Massachusetts	0.0020719142%
MA266	Sandwich Town, Massachusetts	0.4944903815%
MA267	Saugus Town, Massachusetts	0.3330802265%
MA268	Savoy Town, Massachusetts	0.0103246605%

State ID	Qualifying Subdivision	Consolidated State Allocation
MA269	Scituate Town, Massachusetts	0.3938536371%
MA270	Seekonk Town, Massachusetts	0.3325159013%
MA271	Sharon Town, Massachusetts	0.3157804286%
MA272	Sheffield Town, Massachusetts	0.0066580643%
MA273	Shelburne Town, Massachusetts	0.0145706034%
MA274	Sherborn Town, Massachusetts	0.0361347676%
MA275	Shirley Town, Massachusetts	0.0049654026%
MA276	Shrewsbury Town, Massachusetts	0.6471205738%
MA277	Shutesbury Town, Massachusetts	0.0358178516%
MA278	Somerset Town, Massachusetts	0.2943717652%
MA279	Somerville City, Massachusetts	0.5538327759%
MA280	South Hadley Town, Massachusetts	0.3289508962%
MA281	Southampton Town, Massachusetts	0.0773861993%
MA282	Southborough Town, Massachusetts	0.2173688486%
MA283	Southbridge Town City, Massachusetts	0.2906114812%
MA284	Southwick Town, Massachusetts	0.0165255910%
MA285	Spencer Town, Massachusetts	0.0203153945%
MA286	Springfield City, Massachusetts	3.4410224370%
MA287	Sterling Town, Massachusetts	0.0196759620%
MA288	Stockbridge Town, Massachusetts	0.0092305018%
MA289	Stoneham Town, Massachusetts	0.1669780908%
MA290	Stoughton Town, Massachusetts	0.3118943726%
MA291	Stow Town, Massachusetts	0.0087733680%
MA292	Sturbridge Town, Massachusetts	0.1235688557%
MA293	Sudbury Town, Massachusetts	0.1950193814%
MA294	Sunderland Town, Massachusetts	0.0394445127%
MA295	Sutton Town, Massachusetts	0.1720631416%
MA296	Swampscott Town, Massachusetts	0.2802270489%
MA297	Swansea Town, Massachusetts	0.3127370397%
MA298	Taunton City, Massachusetts	1.3156698571%
MA299	Templeton Town, Massachusetts	0.0167725290%
MA300	Tewksbury Town, Massachusetts	0.2526508477%
MA301	Tisbury Town, Massachusetts	0.0665566713%
MA302	Tolland Town, Massachusetts	0.0005593530%
MA303	Topsfield Town, Massachusetts	0.0713350646%
MA304	Townsend Town, Massachusetts	0.0093843801%
MA305	Truro Town, Massachusetts	0.0604250384%
MA306	Tyngsborough Town, Massachusetts	0.1162396935%
MA307	Tyringham Town, Massachusetts	0.0012803829%
MA308	Upton Town, Massachusetts	0.0211017442%
MA309	Uxbridge Town, Massachusetts	0.2255606716%
MA310	Wakefield Town, Massachusetts	0.2116065761%
MA311	Wales Town, Massachusetts	0.0147604390%
MA312	Walpole Town, Massachusetts	0.3194149930%

State ID	Qualifying Subdivision	Consolidated State Allocation
MA313	Waltham City, Massachusetts	0.5322671985%
MA314	Ware Town, Massachusetts	0.2035588439%
MA315	Wareham Town, Massachusetts	0.3595394490%
MA316	Warren Town, Massachusetts	0.0179304373%
MA317	Warwick Town, Massachusetts	0.0065997057%
MA318	Washington Town, Massachusetts	0.0004074112%
MA319	Watertown Town City, Massachusetts	0.2540965713%
MA320	Wayland Town, Massachusetts	0.2147389946%
MA321	Webster Town, Massachusetts	0.2405963644%
MA322	Wellesley Town, Massachusetts	0.4811483972%
MA323	Wellfleet Town, Massachusetts	0.0667808417%
MA324	Wendell Town, Massachusetts	0.0010508215%
MA325	Wenham Town, Massachusetts	0.0112119209%
MA326	West Boylston Town, Massachusetts	0.1222726663%
MA327	West Bridgewater Town, Massachusetts	0.1467598909%
MA328	West Brookfield Town, Massachusetts	0.0059191866%
MA329	West Newbury Town, Massachusetts	0.0086981560%
MA330	West Springfield Town City, Massachusetts	0.4627594653%
MA331	West Stockbridge Town, Massachusetts	0.0028401544%
MA332	West Tisbury Town, Massachusetts	0.0099183484%
MA333	Westborough Town, Massachusetts	0.5070384269%
MA334	Westfield City, Massachusetts	0.6538385669%
MA335	Westford Town, Massachusetts	0.2939962811%
MA336	Westhampton Town, Massachusetts	0.0199373981%
MA337	Westminster Town, Massachusetts	0.0226744436%
MA338	Weston Town, Massachusetts	0.2254658323%
MA339	Westport Town, Massachusetts	0.2811335179%
MA340	Westwood Town, Massachusetts	0.2903783084%
MA341	Weymouth Town City, Massachusetts	0.5656639786%
MA342	Whately Town, Massachusetts	0.0314223222%
MA343	Whitman Town, Massachusetts	0.0448742719%
MA344	Wilbraham Town, Massachusetts	0.0313150261%
MA345	Williamsburg Town, Massachusetts	0.0343998679%
MA346	Williamstown, Massachusetts	0.0783021941%
MA347	Wilmington Town, Massachusetts	0.2467559990%
MA348	Winchendon Town, Massachusetts	0.1830720373%
MA349	Winchester Town, Massachusetts	0.2570095300%

State ID	Qualifying Subdivision	Consolidated State Allocation
MA350	Windsor Town, Massachusetts	0.0005238144%
MA351	Winthrop Town City, Massachusetts	0.1505890537%
MA352	Woburn City, Massachusetts	0.3503541163%
MA353	Worcester City, Massachusetts	3.7929503518%
MA354	Worthington Town, Massachusetts	0.0015069609%
MA355	Wrentham Town, Massachusetts	0.0961794021%
MA356	Yarmouth Town, Massachusetts	0.1308391883%

State ID	Qualifying Subdivision	Consolidated State Allocation
MI1	Ada Township, Michigan	0.0042278554%
MI2	Adrian City, Michigan	0.0328126789%
MI3	Alcona County, Michigan	0.0934629817%
MI4	Alger County, Michigan	0.0879525875%
MI5	Algoma Township, Michigan	0.0016941585%
MI6	Allegan County, Michigan	0.4460242903%
MI7	Allen Park City, Michigan	0.0620457416%
MI8	Allendale Charter Township, Michigan	0.0044901249%
MI9	Alpena County, Michigan	0.3552566921%
MI10	Alpine Charter Township, Michigan	0.0014679355%
MI11	Ann Arbor City, Michigan	0.2674253148%
MI12	Antrim County, Michigan	0.2666725680%
MI13	Antwerp Township, Michigan	0.0007581775%
MI14	Arenac County, Michigan	0.1805504304%
MI15	Auburn Hills City, Michigan	0.0679438259%
MI16	Bangor Charter Township, Michigan	0.0063071908%
MI17	Baraga County, Michigan	0.0830045795%
MI18	Barry County, Michigan	0.2499588316%
MI19	Bath Charter Township, Michigan	0.0310575579%
MI20	Battle Creek City, Michigan	0.1976545014%
MI21	Bay City, Michigan	0.0662640083%
MI22	Bay County, Michigan	1.1889740912%
MI23	Bedford Township, Michigan	0.0238194433%
MI24	Benton Charter Township, Michigan	0.0523760917%
MI25	Benzie County, Michigan	0.1559708495%
MI26	Berkley City, Michigan	0.0207220905%
MI27	Berrien County, Michigan	1.4353008205%
MI28	Beverly Hills Village, Michigan	0.0265585450%
MI29	Big Rapids City, Michigan	0.0141485793%
MI30	Birmingham City, Michigan	0.0595211261%
MI278	Blackman Charter Township, Michigan	0.0000000000%
MI31	Bloomfield Charter Township, Michigan	0.1382971973%
MI32	Branch County, Michigan	0.3823019725%
MI33	Brandon Charter Township, Michigan	0.0172309269%
MI34	Brighton Township, Michigan	0.0005844508%
MI35	Brownstown Charter Township, Michigan	0.0597655290%
MI36	Burton City, Michigan	0.0191573337%
MI37	Byron Township, Michigan	0.0082898139%
MI38	Cadillac City, Michigan	0.0572782844%
MI39	Caledonia Charter Township, Kent County, Michigan	0.0026644035%

State ID	Qualifying Subdivision	Consolidated State Allocation
MI40	Calhoun County, Michigan	1.7844560932%
MI41	Cannon Township, Michigan	0.0031972842%
MI42	Canton Charter Township, Michigan	0.2635380816%
MI43	Cascade Charter Township, Michigan	0.0117082940%
MI44	Cass County, Michigan	0.4127454052%
MI45	Charlevoix County, Michigan	0.2142857345%
MI46	Cheboygan County, Michigan	0.3054122146%
MI47	Chesterfield Charter Township, Michigan	0.1219762582%
MI48	Chippewa County, Michigan	0.2775926422%
MI49	Clare County, Michigan	0.2705014687%
MI50	Clawson City, Michigan	0.0134773906%
MI51	Clinton Charter Township, Michigan	0.6524315825%
MI52	Clinton County, Michigan	0.5402667258%
MI53	Coldwater City, Michigan	0.0074666730%
MI54	Commerce Charter Township, Michigan	0.0192121087%
MI55	Comstock Charter Township, Michigan	0.0081656838%
MI56	Cooper Charter Township, Michigan	0.0009266020%
MI57	Crawford County, Michigan	0.2886252314%
MI58	Davison Township, Michigan	0.0085451532%
MI59	Dearborn City, Michigan	0.2895118016%
MI60	Dearborn Heights City, Michigan	0.1017944247%
MI61	Delhi Charter Township, Michigan	0.0190090980%
MI62	Delta Charter Township, Michigan	0.0391807240%
MI63	Delta County, Michigan	0.2697501609%
MI64	Detroit City, Michigan	7.3863527308%
MI65	Dewitt Charter Township, Michigan	0.0355251274%
MI66	Dickinson County, Michigan	0.2772928270%
MI67	East Bay Township, Michigan	0.0014150822%
MI68	East Grand Rapids City, Michigan	0.0200332982%
MI69	East Lansing City, Michigan	0.1928772515%
MI70	Eastpointe City, Michigan	0.1620457585%
MI71	Eaton County, Michigan	1.0040379149%
MI72	Egelston Township, Michigan	0.0057198661%
MI73	Emmet County, Michigan	0.1751859110%
MI74	Emmett Charter Township, Michigan	0.0078634499%
MI75	Escanaba City, Michigan	0.0187485817%
MI76	Farmington City, Michigan	0.0212789632%
MI77	Farmington Hills City, Michigan	0.1595279696%
MI78	Fenton Charter Township, Michigan	0.0017899625%

State ID	Qualifying Subdivision	Consolidated State Allocation
MI79	Fenton City, Michigan	0.0463367531%
MI80	Ferndale City, Michigan	0.0860957347%
MI81	Flat Rock City, Michigan	0.0165965372%
MI82	Flint Charter Township, Michigan	0.0247094958%
MI83	Flint City, Michigan	2.8492826162%
MI84	Flushing Charter Township, Michigan	0.0036163716%
MI85	Fort Gratiot Charter Township, Michigan	0.0091219411%
MI86	Fraser City, Michigan	0.0773787868%
MI87	Frenchtown Charter Township, Michigan	0.0472286300%
MI88	Fruitport Charter Township, Michigan	0.0124893804%
MI89	Gaines Township, Kent County, Michigan	0.0086869609%
MI90	Garden City, Michigan	0.0348032319%
MI91	Garfield Charter Township, Michigan	0.0003928875%
MI92	Genesee Charter Township, Michigan	0.0125078610%
MI93	Genesee County, Michigan	2.1444091585%
MI94	Genoa Township, Michigan	0.0000730563%
MI95	Georgetown Charter Township, Michigan	0.0069588066%
MI96	Gladwin County, Michigan	0.2077497604%
MI97	Gogebic County, Michigan	0.0721438406%
MI98	Grand Blanc Charter Township, Michigan	0.0202728576%
MI99	Grand Haven Charter Township, Michigan	0.0108943696%
MI100	Grand Haven City, Michigan	0.0335954698%
MI101	Grand Rapids Charter Township, Michigan	0.0036296214%
MI102	Grand Rapids City, Michigan	1.3440305744%
MI103	Grand Traverse County, Michigan	0.9563577517%
MI104	Grandville City, Michigan	0.0268602038%
MI105	Gratiot County, Michigan	0.3525171058%
MI106	Green Oak Township, Michigan	0.0310802595%
MI107	Grosse Ile Township, Michigan	0.0206969233%
MI108	Grosse Pointe Park City, Michigan	0.0273525288%
MI109	Grosse Pointe Woods City, Michigan	0.0194917954%
MI110	Hamburg Township, Michigan	0.0327814289%
MI111	Hamtramck City, Michigan	0.1045696825%
MI112	Harper Woods City, Michigan	0.0291877050%
MI113	Harrison Charter Township, Michigan	0.1197690060%
MI114	Hartland Township, Michigan	0.0002817888%

State ID	Qualifying Subdivision	Consolidated State Allocation
MI115	Hazel Park City, Michigan	0.0425097355%
MI116	Highland Charter Township, Michigan	0.0169953269%
MI117	Highland Park City, Michigan	0.0226020911%
MI118	Hillsdale County, Michigan	0.4179676993%
MI119	Holland Charter Township, Michigan	0.0168424444%
MI120	Holland City, Michigan	0.0955964916%
MI121	Holly Township, Michigan	0.0023667091%
MI122	Houghton County, Michigan	0.2492719347%
MI123	Huron Charter Township, Michigan	0.0404726791%
MI124	Huron County, Michigan	0.1691383539%
MI125	Independence Charter Township, Michigan	0.0476500991%
MI126	Ingham County, Michigan	2.3910799665%
MI127	Inkster City, Michigan	0.0963789326%
MI128	Ionia City, Michigan	0.0259372614%
MI129	Ionia County, Michigan	0.5298085345%
MI130	Iosco County, Michigan	0.3597971837%
MI131	Iron County, Michigan	0.1234778574%
MI132	Iron Mountain City, Michigan	0.0102890396%
MI133	Isabella County, Michigan	0.6406627159%
MI134	Jackson City, Michigan	0.1975960490%
MI135	Jackson County, Michigan	0.6266962818%
MI136	Kalamazoo Charter Township, Michigan	0.0300335110%
MI137	Kalamazoo City, Michigan	0.2186435127%
MI138	Kalamazoo County, Michigan	2.1433241424%
MI139	Kalkaska County, Michigan	0.0950485976%
MI140	Kent County, Michigan	3.0032910409%
MI141	Kentwood City, Michigan	0.0821691991%
MI142	Keweenaw County, Michigan	0.0039070602%
MI143	Lake County, Michigan	0.0815750583%
MI144	Lansing City, Michigan	0.6157258774%
MI145	Lapeer County, Michigan	0.4570551035%
MI146	Leelanau County, Michigan	0.1385869050%
MI147	Lenawee County, Michigan	0.8823790089%
MI148	Lenox Township, Michigan	0.0064611477%
MI149	Leoni Township, Michigan	0.0052492697%
MI150	Lincoln Charter Township, Michigan	0.0103038346%
MI151	Lincoln Park City, Michigan	0.0917234908%
MI152	Livingston County, Michigan	1.4441655813%
MI153	Livonia City, Michigan	0.4479739512%
MI154	Luce County, Michigan	0.0715137120%
MI155	Lyon Charter Township, Michigan	0.0034804545%
MI156	Mackinac County, Michigan	0.0525087280%
MI157	Macomb County, Michigan	8.9600697690%

State ID	Qualifying Subdivision	Consolidated State Allocation
MI158	Macomb Township, Michigan	0.0624612667%
MI159	Madison Heights City, Michigan	0.0833167256%
MI160	Manistee County, Michigan	0.3495467119%
MI161	Marion Township, Livingston County, Michigan	0.0001148028%
MI162	Marquette City, Michigan	0.0180973752%
MI163	Marquette County, Michigan	0.6035272233%
MI164	Mason County, Michigan	0.2785769407%
MI165	Mecosta County, Michigan	0.1917457546%
MI166	Melvindale City, Michigan	0.0300027854%
MI167	Menominee County, Michigan	0.0912256468%
MI168	Meridian Charter Township, Michigan	0.0408752583%
MI169	Midland City, Michigan	0.1745254871%
MI170	Midland County, Michigan	0.3108652798%
MI171	Milford Charter Township, Michigan	0.0037106999%
MI172	Missaukee County, Michigan	0.0578937210%
MI173	Monitor Charter Township, Michigan	0.0025502597%
MI174	Monroe Charter Township, Michigan	0.0069121111%
MI175	Monroe City, Michigan	0.1213473624%
MI176	Monroe County, Michigan	1.7767045087%
MI177	Montcalm County, Michigan	0.6957831869%
MI178	Montmorency County, Michigan	0.0985847841%
MI179	Mount Clemens City, Michigan	0.0290390165%
MI180	Mount Morris Charter Township, Michigan	0.0143743799%
MI181	Mount Pleasant City, Michigan	0.0206549613%
MI182	Mundy Charter Township, Michigan	0.0087055516%
MI183	Muskegon Charter Township, Michigan	0.0208333463%
MI184	Muskegon City, Michigan	0.1009248080%
MI185	Muskegon County, Michigan	1.9100367830%
MI186	Muskegon Heights City, Michigan	0.0288916451%
MI187	New Baltimore City, Michigan	0.0277364435%
MI188	Newaygo County, Michigan	0.5231811022%
MI189	Niles City, Michigan	0.0336753397%
MI190	Niles Township, Michigan	0.0124323128%
MI191	Northville Charter Township, Michigan	0.0937410207%
MI192	Norton Shores City, Michigan	0.0405173975%
MI193	Novi City, Michigan	0.0846232347%
MI194	Oak Park City, Michigan	0.0599120079%
MI195	Oakland Charter Township, Michigan	0.0158387451%
MI196	Oakland County, Michigan	6.0626269110%

State ID	Qualifying Subdivision	Consolidated State Allocation
MI197	Oceana County, Michigan	0.2437641356%
MI198	Oceola Township, Michigan	0.0002087325%
MI199	Ogemaw County, Michigan	0.6231250992%
MI200	Ontonagon County, Michigan	0.0564870701%
MI201	Orion Charter Township, Michigan	0.0279774995%
MI202	Osceola County, Michigan	0.2155121164%
MI203	Oscoda County, Michigan	0.0566748663%
MI204	Oshtemo Charter Township, Michigan	0.0071811704%
MI205	Otsego County, Michigan	0.3179204956%
MI206	Ottawa County, Michigan	0.8561297014%
MI207	Owosso City, Michigan	0.0346613348%
MI208	Oxford Charter Township, Michigan	0.0127384634%
MI209	Park Township, Ottawa County, Michigan	0.0040071188%
MI210	Pittsfield Charter Township, Michigan	0.0274648128%
MI211	Plainfield Charter Township, Michigan	0.0085009554%
MI212	Plymouth Charter Township, Michigan	0.0357383127%
MI213	Pontiac City, Michigan	0.3248498872%
MI214	Port Huron Charter Township, Michigan	0.0083327500%
MI215	Port Huron City, Michigan	0.1504374166%
MI216	Portage City, Michigan	0.0567022991%
MI217	Presque Isle County, Michigan	0.1629846266%
MI218	Redford Charter Township, Michigan	0.1223763279%
MI219	Riverview City, Michigan	0.0278625766%
MI220	Rochester City, Michigan	0.0230459632%
MI221	Rochester Hills City, Michigan	0.0390185719%
MI222	Romulus City, Michigan	0.1043054243%
MI223	Roscommon County, Michigan	0.4301835283%
MI224	Roseville City, Michigan	0.2467127304%
MI225	Royal Oak City, Michigan	0.1498737243%
MI226	Saginaw Charter Township, Michigan	0.0399524841%
MI227	Saginaw City, Michigan	0.2486892685%
MI228	Saginaw County, Michigan	1.8697499899%
MI229	Sanilac County, Michigan	0.3884583961%
MI230	Sault Ste. Marie City, Michigan	0.1102861372%
MI231	Schoolcraft County, Michigan	0.0455825815%
MI232	Scio Charter Township, Michigan	0.0029747576%
MI233	Shelby Charter Township, Michigan	0.2924370238%
MI234	Shiawassee County, Michigan	0.8126038392%

State ID	Qualifying Subdivision	Consolidated State Allocation
MI235	South Lyon City, Michigan	0.0149498906%
MI236	Southfield City, Michigan	0.2271237501%
MI237	Southfield Township, Michigan	0.0000642545%
MI238	Southgate City, Michigan	0.0512897499%
MI239	Spring Lake Township, Michigan	0.0060017466%
MI240	Springfield Charter Township, Michigan	0.0025808909%
MI241	St Clair County, Michigan	2.2355263751%
MI242	St Joseph County, Michigan	0.2462634133%
MI243	St. Clair Shores City, Michigan	0.1962330188%
MI244	Sterling Heights City, Michigan	1.0160154348%
MI245	Sturgis City, Michigan	0.0345993898%
MI246	Summit Township, Jackson County, Michigan	0.0084993840%
MI247	Superior Charter Township, Michigan	0.0069991428%
MI248	Taylor City, Michigan	0.2173451175%
MI249	Texas Charter Township, Michigan	0.0030056684%
MI250	Thomas Township, Michigan	0.0073384407%
MI251	Traverse City, Michigan	0.0694748526%
MI252	Trenton City, Michigan	0.0278175688%
MI253	Troy City, Michigan	0.1362571155%
MI254	Tuscola County, Michigan	0.4964108264%
MI255	Tyrone Township, Livingston County, Michigan	0.0055627194%
MI256	Union Charter Township, Michigan	0.0000295731%
MI257	Van Buren Charter Township, Michigan	0.0769291242%
MI258	Van Buren County, Michigan	0.4404295489%
MI259	Vienna Charter Township, Genesee County, Michigan	0.0049907472%
MI260	Walker City, Michigan	0.0333201255%
MI261	Warren City, Michigan	1.2684334598%
MI262	Washington Township, Macomb County, Michigan	0.0466960473%
MI263	Washtenaw County, Michigan	2.6615283392%
MI264	Waterford Charter Township, Michigan	0.1262119884%
MI265	Wayne City, Michigan	0.0938477408%
MI266	Wayne County, Michigan	11.4087490300%
MI267	West Bloomfield Charter Township, Michigan	0.1514104788%
MI268	Westland City, Michigan	0.3653115305%
MI269	Wexford County, Michigan	0.3345380363%
MI270	White Lake Charter Township, Michigan	0.0337978902%
MI271	Wixom City, Michigan	0.0213271541%

State ID	Qualifying Subdivision	Consolidated State Allocation
MI272	Woodhaven City, Michigan	0.0330180645%
MI273	Wyandotte City, Michigan	0.0563902282%
MI274	Wyoming City, Michigan	0.1474722212%
MI275	Ypsilanti Charter Township, Michigan	0.0334144094%
MI276	Ypsilanti City, Michigan	0.0518771364%
MI277	Zeeland Charter Township, Michigan	0.0035509487%

State ID	Qualifying Subdivision	Consolidated State Allocation
MN1	Aitkin County, Minnesota	0.5760578506%
MN4	Andover City, Minnesota	0.1364919451%
MN6	Anoka County, Minnesota	5.0386504681%
MN7	Apple Valley City, Minnesota	0.2990817345%
MN10	Becker County, Minnesota	0.6619330684%
MN11	Beltrami County, Minnesota	0.7640787093%
MN13	Benton County, Minnesota	0.6440948102%
MN15	Big Stone County, Minnesota	0.1194868775%
MN16	Blaine City, Minnesota	0.4249516913%
MN17	Bloomington City, Minnesota	0.4900195550%
MN18	Blue Earth County, Minnesota	0.6635420705%
MN20	Brooklyn Center City, Minnesota	0.1413853902%
MN21	Brooklyn Park City, Minnesota	0.2804136235%
MN22	Brown County, Minnesota	0.3325325416%
MN24	Burnsville City, Minnesota	0.5135361297%
MN25	Carlton County, Minnesota	0.9839591749%
MN26	Carver County, Minnesota	1.1452829660%
MN27	Cass County, Minnesota	0.8895681513%
MN31	Chippewa County, Minnesota	0.2092611794%
MN32	Chisago County, Minnesota	0.9950193750%
MN33	Clay County, Minnesota	0.9428475282%
MN34	Clearwater County, Minnesota	0.1858592043%
MN37	Cook County, Minnesota	0.1074594960%
MN38	Coon Rapids City, Minnesota	0.5772642445%
MN39	Cottage Grove City, Minnesota	0.2810994719%
MN40	Cottonwood County, Minnesota	0.1739065270%
MN41	Crow Wing County, Minnesota	1.1394859175%
MN43	Dakota County, Minnesota	4.4207140603%
MN44	Dodge County, Minnesota	0.2213963258%
MN45	Douglas County, Minnesota	0.6021779472%
MN46	Duluth City, Minnesota	1.1502115380%
MN47	Eagan City, Minnesota	0.3657951576%
MN49	Eden Prairie City, Minnesota	0.2552171573%
MN50	Edina City, Minnesota	0.1973054822%
MN54	Faribault County, Minnesota	0.2169409335%
MN57	Fillmore County, Minnesota	0.2329591105%
MN59	Freeborn County, Minnesota	0.3507169824%
MN62	Goodhue County, Minnesota	0.5616542387%
MN64	Grant County, Minnesota	0.0764556498%
MN67	Hennepin County, Minnesota	19.0624622262%
MN70	Houston County, Minnesota	0.3099019273%
MN71	Hubbard County, Minnesota	0.4582368775%
MN74	Inver Grove Heights City, Minnesota	0.2193400520%
MN75	Isanti County, Minnesota	0.7712992708%
MN76	Itasca County, Minnesota	1.1406408131%
MN77	Jackson County, Minnesota	0.1408950444%
MN78	Kanabec County, Minnesota	0.3078966750%
MN79	Kandiyohi County, Minnesota	0.1581167542%

State ID	Qualifying Subdivision	Consolidated State Allocation
MN80	Kittson County, Minnesota	0.0812834506%
MN81	Koochiching County, Minnesota	0.2612581866%
MN82	Lac Qui Parle County, Minnesota	0.0985665133%
MN83	Lake County, Minnesota	0.1827750321%
MN84	Lake of the Woods County, Minnesota	0.1123105028%
MN85	Lakeville City, Minnesota	0.2822249627%
MN86	Le Sueur County, Minnesota	0.3225703347%
MN87	Lincoln County, Minnesota	0.1091919984%
MN90	Lyon County, Minnesota	0.2935118186%
MN91	Mahnomen County, Minnesota	0.1416417688%
MN92	Mankato City, Minnesota	0.3698584321%
MN93	Maple Grove City, Minnesota	0.1814019047%
MN94	Maplewood City, Minnesota	0.1875101678%
MN96	Marshall County, Minnesota	0.1296352091%
MN97	Martin County, Minnesota	0.2543064014%
MN98	McLeod County, Minnesota	0.1247104518%
MN99	Meeker County, Minnesota	0.3744031515%
MN101	Mille Lacs County, Minnesota	0.9301506696%
MN102	Minneapolis City, Minnesota	4.8777618689%
MN103	Minnetonka City, Minnesota	0.1967231071%
MN105	Moorhead City, Minnesota	0.4337377038%
MN106	Morrison County, Minnesota	0.7178981419%
MN108	Mower County, Minnesota	0.5801769149%
MN109	Murray County, Minnesota	0.1348775389%
MN113	Nicollet County, Minnesota	0.1572381053%
MN114	Nobles County, Minnesota	0.1562005112%
MN115	Norman County, Minnesota	0.1087596675%
MN118	North St. Paul City, Minnesota	0.0575844069%
MN121	Olmsted County, Minnesota	1.9236715095%
MN123	Otter Tail County, Minnesota	0.8336175419%
MN125	Pennington County, Minnesota	0.3082576395%
MN126	Pine County, Minnesota	0.5671222707%
MN127	Pipestone County, Minnesota	0.1535154503%
MN128	Plymouth City, Minnesota	0.1762541473%
MN129	Polk County, Minnesota	0.8654291474%
MN130	Pope County, Minnesota	0.1870129873%
MN132	Proctor City, Minnesota	0.0214374128%
MN134	Ramsey County, Minnesota	7.1081424150%
MN135	Red Lake County, Minnesota	0.0532649128%
MN137	Redwood County, Minnesota	0.2809842367%
MN138	Renville County, Minnesota	0.2706888807%
MN139	Rice County, Minnesota	0.2674764398%
MN140	Richfield City, Minnesota	0.2534018444%
MN142	Rochester City, Minnesota	0.7363082849%
MN143	Rock County, Minnesota	0.2043437336%
MN145	Roseau County, Minnesota	0.2517872793%
MN147	Roseville City, Minnesota	0.1721905549%
MN150	Savage City, Minnesota	0.1883576635%

State ID	Qualifying Subdivision	Consolidated State Allocation
MN151	Scott County, Minnesota	1.3274301646%
MN152	Shakopee City, Minnesota	0.2879873611%
MN153	Sherburne County, Minnesota	1.2543449472%
MN155	Sibley County, Minnesota	0.2393480708%
MN157	St Louis County, Minnesota	4.7407767170%
MN158	St. Cloud City, Minnesota	0.7330089009%
MN159	St. Louis Park City, Minnesota	0.1476314588%
MN161	St. Paul City, Minnesota	3.7475206798%
MN163	Stearns County, Minnesota	2.4158085321%
MN164	Steele County, Minnesota	0.3969975263%
MN165	Stevens County, Minnesota	0.1439474275%
MN167	Swift County, Minnesota	0.1344167568%
MN168	Todd County, Minnesota	0.4180909817%
MN169	Traverse County, Minnesota	0.0903964134%
MN172	Wabasha County, Minnesota	0.3103038997%
MN174	Wadena County, Minnesota	0.2644094337%
MN175	Waseca County, Minnesota	0.2857912156%
MN176	Washington County, Minnesota	3.0852862513%
MN177	Watonwan County, Minnesota	0.1475626356%
MN181	Wilkin County, Minnesota	0.0937962507%
MN184	Winona County, Minnesota	0.7755267356%
MN185	Woodbury City, Minnesota	0.4677270172%
MN187	Wright County, Minnesota	1.6985269385%
MN188	Yellow Medicine County, Minnesota	0.1742264836%

State ID	Qualifying Subdivision	Consolidated State Allocation
MS1	Adams County, Mississippi	0.8956930256%
MS2	Alcorn County, Mississippi	0.0576362452%
MS3	Amite County, Mississippi	0.2746164929%
MS4	Amory City, Mississippi	0.2116793450%
MS5	Arcola Town, Mississippi	0.0010556367%
MS6	Attala County, Mississippi	0.4297756502%
MS7	Bay St. Louis City, Mississippi	0.0311287683%
MS8	Benton County, Mississippi	0.1960984974%
MS9	Biloxi City, Mississippi	0.6645430129%
MS10	Bolivar County, Mississippi	0.5038616841%
MS11	Brandon City, Mississippi	0.5570720591%
MS12	Brookhaven City, Mississippi	0.4683584117%
MS13	Byram City, Mississippi	0.0546025247%
MS14	Caledonia Town, Mississippi	0.0029950314%
MS15	Calhoun County, Mississippi	0.4153642017%
MS16	Canton City, Mississippi	0.3608383968%
MS17	Carroll County, Mississippi	0.2031873312%
MS18	Charleston City, Mississippi	0.0470339459%
MS19	Chickasaw County, Mississippi	0.5109289507%
MS21	Claiborne County, Mississippi	0.1646839236%
MS22	Clarke County, Mississippi	0.5114179153%
MS23	Clarksdale City, Mississippi	0.2773833408%
MS24	Clay County, Mississippi	0.1860006383%
MS25	Cleveland City, Mississippi	0.1374693414%
MS26	Clinton City, Mississippi	0.3236377422%
MS27	Coahoma County, Mississippi	0.4236538797%
MS28	Columbia City, Mississippi	0.1695070569%
MS29	Columbus City, Mississippi	0.7040334045%
MS30	Copiah County, Mississippi	0.7218083365%
MS31	Corinth City, Mississippi	1.5766265587%
MS32	Covington County, Mississippi	0.6154970684%
MS33	Desoto County, Mississippi	2.2451071357%
MS34	Diamondhead City, Mississippi	0.0001700675%
MS35	D'Iberville City, Mississippi	0.0448052883%
MS36	Forrest County, Mississippi	3.0519047573%
MS37	Franklin County, Mississippi	0.2573415560%
MS38	Gautier City, Mississippi	0.1317718341%
MS39	George County, Mississippi	1.0370803395%
MS40	Greene County, Mississippi	0.2945486312%
MS41	Greenville City, Mississippi	0.0840582768%
MS42	Greenwood City, Mississippi	0.5924200813%
MS43	Grenada City, Mississippi	0.0559331010%
MS44	Grenada County, Mississippi	0.5257141196%
MS45	Gulfport City, Mississippi	8.3397025495%
MS46	Hancock County, Mississippi	2.4053819819%
MS47	Harrison County, Mississippi	1.2833704733%
MS48	Hattiesburg City, Mississippi	0.3234604308%
MS49	Hernando City, Mississippi	0.4422243258%
MS50	Hinds County, Mississippi	2.0886225058%

State ID	Qualifying Subdivision	Consolidated State Allocation
MS51	Holly Springs City, Mississippi	0.1628357363%
MS52	Holmes County, Mississippi	0.3324473362%
MS53	Horn Lake City, Mississippi	0.6520350689%
MS54	Humphreys County, Mississippi	0.1373820850%
MS55	Indianola City, Mississippi	0.0232047435%
MS56	Issaquena County, Mississippi	0.0175702913%
MS57	Itawamba County, Mississippi	1.0517575083%
MS58	Iuka City, Mississippi	0.2854580062%
MS59	Jackson City, Mississippi	2.6937777267%
MS60	Jackson County, Mississippi	7.6559251195%
MS61	Jasper County, Mississippi	0.3922495132%
MS62	Jefferson County, Mississippi	0.0985248779%
MS63	Jefferson Davis County, Mississippi	0.3514408929%
MS64	Jones County, Mississippi	2.2234728410%
MS65	Jonestown, Mississippi	0.0093341195%
MS66	Kemper County, Mississippi	0.2223493091%
MS67	Kosciusko City, Mississippi	0.0408594923%
MS68	Lafayette County, Mississippi	0.7049370835%
MS69	Lamar County, Mississippi	1.3105353358%
MS70	Lauderdale County, Mississippi	1.4707252306%
MS71	Laurel City, Mississippi	0.1485722943%
MS72	Lawrence County, Mississippi	0.3428558606%
MS73	Leake County, Mississippi	0.5798006796%
MS74	Leakesville Town, Mississippi	0.0098357610%
MS75	Lee County, Mississippi	1.4759031513%
MS76	Leflore County, Mississippi	0.1018315625%
MS77	Lincoln County, Mississippi	0.5740717271%
MS78	Long Beach City, Mississippi	0.1390600402%
MS79	Lowndes County, Mississippi	0.9390202250%
MS80	Lumberton City, Mississippi	0.0397836057%
MS81	Madison City, Mississippi	0.5726048335%
MS82	Madison County, Mississippi	1.0788558585%
MS83	Marion County, Mississippi	1.6274197695%
MS84	Marshall County, Mississippi	0.6280998419%
MS85	McComb City, Mississippi	1.1131798538%
MS86	McLain Town, Mississippi	0.0044584678%
MS87	Meridian City, Mississippi	1.1164172272%
MS88	Monroe County, Mississippi	0.8130759595%
MS90	Morton City, Mississippi	0.0606772097%
MS91	Moss Point City, Mississippi	0.0032841297%
MS92	Mound Bayou City, Mississippi	0.0140956794%
MS93	Natchez City, Mississippi	0.1092519702%
MS94	Neshoba County, Mississippi	1.0186206925%
MS95	Nettleton City, Mississippi	0.0307845175%
MS96	New Albany City, Mississippi	0.2729319523%
MS97	Newton County, Mississippi	0.5457847155%
MS98	Noxubee County, Mississippi	0.1848315685%
MS99	Ocean Springs City, Mississippi	0.1196690556%

State ID	Qualifying Subdivision	Consolidated State Allocation
MS100	Oktibbeha County, Mississippi	0.7876142411%
MS101	Olive Branch City, Mississippi	1.0910656493%
MS102	Oxford City, Mississippi	0.6004720270%
MS103	Panola County, Mississippi	1.1256622795%
MS104	Pascagoula City, Mississippi	0.2495759096%
MS105	Pearl City, Mississippi	1.1956946818%
MS106	Pearl River County, Mississippi	3.0542096408%
MS107	Perry County, Mississippi	0.3691053552%
MS108	Petal City, Mississippi	0.0271880761%
MS109	Philadelphia City, Mississippi	0.1154094664%
MS110	Picayune City, Mississippi	0.5891117503%
MS111	Pike County, Mississippi	0.1094837756%
MS112	Pontotoc County, Mississippi	1.1485245831%
MS113	Prentiss County, Mississippi	0.7977710394%
MS114	Quitman City, Mississippi	0.0879535299%
MS115	Quitman County, Mississippi	0.2137706975%
MS116	Rankin County, Mississippi	3.4671179892%
MS117	Ridgeland City, Mississippi	0.7137364699%
MS118	Scott County, Mississippi	0.6318707959%
MS119	Shannon Town, Mississippi	0.0293681665%
MS121	Shubuta Town, Mississippi	0.0061495937%
MS122	Simpson County, Mississippi	0.9197186369%
MS123	Smith County, Mississippi	0.3871907879%
MS124	Southaven City, Mississippi	1.5563837550%
MS125	Starkville City, Mississippi	0.1006690780%
MS126	Stone County, Mississippi	0.5647624674%
MS127	Summit Town, Mississippi	0.0051138779%
MS128	Sunflower County, Mississippi	0.4655797100%
MS129	Tallahatchie County, Mississippi	0.2608094178%
MS130	Tate County, Mississippi	1.1559202957%
MS131	Tippah County, Mississippi	0.6673123304%
MS132	Tishomingo County, Mississippi	1.3186009463%
MS133	Tunica County, Mississippi	0.1788884264%
MS134	Tupelo City, Mississippi	1.4776375761%
MS135	Union County, Mississippi	0.4956551465%
MS136	Verona City, Mississippi	0.0613981442%
MS137	Vicksburg City, Mississippi	0.7338152977%
MS138	Walthall County, Mississippi	0.4949654924%
MS139	Warren County, Mississippi	0.5605232929%
MS140	Washington County, Mississippi	0.9202227479%
MS141	Wayne County, Mississippi	0.9416871398%
MS142	Waynesboro City, Mississippi	0.0134634829%
MS143	Webb Town, Mississippi	0.0120400527%
MS145	West Point City, Mississippi	0.2116459242%
MS146	Wiggins City, Mississippi	0.1726599728%
MS148	Winston County, Mississippi	0.5339853585%
MS149	Yalobusha County, Mississippi	0.2986570860%
MS150	Yazoo City, Mississippi	0.2540246640%
MS151	Yazoo County, Mississippi	0.4224067732%

State ID	Qualifying Subdivision	Consolidated State Allocation
MO1	Adair County, Missouri	
MO2	Andrew County, Missouri	
MO3	Arnold City, Missouri	
MO4	Atchison County, Missouri	
MO5	Audrain County, Missouri	
MO6	Ballwin City, Missouri	
MO7	Barry County, Missouri	
MO8	Barton County, Missouri	
MO9	Bates County, Missouri	
MO10	Bellefontaine Neighbors City, Missouri	
MO11	Belton City, Missouri	
MO12	Benton County, Missouri	
MO13	Blue Springs City, Missouri	
MO14	Bolivar City, Missouri	
MO15	Bollinger County, Missouri	
MO16	Boone County, Missouri	
MO17	Branson City, Missouri	Allocations in Missouri
MO18	Bridgeton City, Missouri	will be made in
MO19	Buchanan County, Missouri	accordance with the
MO20	Butler County, Missouri	Memorandum of
MO21	Caldwell County, Missouri	Understanding Between
MO22	Callaway County, Missouri	the State of Missouri and
MO23	Camden County, Missouri	its Political Subdivisions
MO24	Cape Girardeau City, Missouri	on Proceeds Relating to
MO25	Cape Girardeau County, Missouri	the Settlement of Opioid
MO26	Carroll County, Missouri	Litigation and with the
MO27	Carter County, Missouri	ancillary Memorandum
MO28	Carthage City, Missouri	of Understanding
MO29	Cass County, Missouri	Between the Litigating
MO30	Cedar County, Missouri	Subdivisions of the State
MO31	Chariton County, Missouri	of Missouri.
MO32	Chesterfield City, Missouri	
MO33	Christian County, Missouri	
MO34	Clark County, Missouri	
MO35	Clay County, Missouri	
MO36	Clayton City, Missouri	
MO37	Clinton County, Missouri	
MO38	Cole County, Missouri	
MO39	Columbia City, Missouri	
MO40	Cooper County, Missouri	
MO41	Crawford County, Missouri	
MO42	Crestwood City, Missouri	
MO43	Creve Coeur City, Missouri	
MO44	Dade County, Missouri	
MO45	Dallas County, Missouri	
MO46	Dardenne Prairie City, Missouri	
MO47	Daviess County, Missouri	
MO48	De Kalb County, Missouri	

State ID	Qualifying Subdivision	Consolidated State Allocation
MO49	Dent County, Missouri	
MO50	Douglas County, Missouri	
MO51	Dunklin County, Missouri	
MO52	Eureka City, Missouri	
MO53	Excelsior Springs City, Missouri	
MO54	Farmington City, Missouri	
MO55	Ferguson City, Missouri	
MO56	Festus City, Missouri	
MO57	Florissant City, Missouri	
MO58	Franklin County, Missouri	
MO59	Fulton City, Missouri	
MO60	Gasconade County, Missouri	
MO61	Gentry County, Missouri	
MO62	Gladstone City, Missouri	
MO63	Grain Valley City, Missouri	
MO64	Grandview City, Missouri	
MO65	Greene County, Missouri	
MO66	Grundy County, Missouri	Allocations in Missouri will be made in accordance with the Memorandum of Understanding Between the State of Missouri and its Political Subdivisions on Proceeds Relating to the Settlement of Opioid Litigation and with the ancillary Memorandum of Understanding Between the Litigating Subdivisions of the State of Missouri.
MO67	Hannibal City, Missouri	
MO68	Harrison County, Missouri	
MO69	Harrisonville City, Missouri	
MO70	Hazelwood City, Missouri	
MO71	Henry County, Missouri	
MO72	Hickory County, Missouri	
MO73	Holt County, Missouri	
MO74	Howard County, Missouri	
MO75	Howell County, Missouri	
MO76	Independence City, Missouri	
MO77	Iron County, Missouri	
MO78	Jackson City, Missouri	
MO79	Jackson County, Missouri	
MO80	Jasper County, Missouri	
MO81	Jefferson City, Missouri	
MO82	Jefferson County, Missouri	
MO83	Jennings City, Missouri	
MO84	Johnson County, Missouri	
MO85	Joplin City, Missouri	
MO86	Kansas City, Missouri	
MO87	Kearney City, Missouri	
MO88	Kennett City, Missouri	
MO89	Kirksville City, Missouri	
MO90	Kirkwood City, Missouri	
MO91	Knox County, Missouri	
MO92	Laclede County, Missouri	
MO93	Lafayette County, Missouri	
MO94	Lake St. Louis City, Missouri	
MO95	Lawrence County, Missouri	
MO96	Lebanon City, Missouri	
MO97	Lee's Summit City, Missouri	

State ID	Qualifying Subdivision	Consolidated State Allocation
MO98	Lewis County, Missouri	
MO99	Liberty City, Missouri	
MO100	Lincoln County, Missouri	
MO101	Linn County, Missouri	
MO102	Livingston County, Missouri	
MO103	Macon County, Missouri	
MO104	Madison County, Missouri	
MO105	Manchester City, Missouri	
MO106	Maries County, Missouri	
MO107	Marion County, Missouri	
MO108	Marshall City, Missouri	
MO109	Maryland Heights City, Missouri	
MO110	Maryville City, Missouri	
MO111	McDonald County, Missouri	
MO112	Mercer County, Missouri	
MO113	Mexico City, Missouri	
MO114	Miller County, Missouri	
MO115	Mississippi County, Missouri	Allocations in Missouri
MO116	Moberly City, Missouri	will be made in
MO117	Moniteau County, Missouri	accordance with the
MO118	Monroe County, Missouri	Memorandum of
MO119	Montgomery County, Missouri	Understanding Between
MO120	Morgan County, Missouri	the State of Missouri and
MO121	Neosho City, Missouri	its Political Subdivisions
MO122	New Madrid County, Missouri	on Proceeds Relating to
MO123	Newton County, Missouri	the Settlement of Opioid
MO124	Nixa City, Missouri	Litigation and with the
MO125	Nodaway County, Missouri	ancillary Memorandum
MO126	O'Fallon City, Missouri	of Understanding
MO127	Oregon County, Missouri	Between the Litigating
MO128	Osage County, Missouri	Subdivisions of the State
MO129	Overland City, Missouri	of Missouri.
MO130	Ozark City, Missouri	
MO131	Ozark County, Missouri	
MO132	Pemiscot County, Missouri	
MO133	Perry County, Missouri	
MO134	Pettis County, Missouri	
MO135	Phelps County, Missouri	
MO136	Pike County, Missouri	
MO137	Platte County, Missouri	
MO138	Polk County, Missouri	
MO139	Poplar Bluff City, Missouri	
MO140	Pulaski County, Missouri	
MO141	Putnam County, Missouri	
MO142	Ralls County, Missouri	
MO143	Randolph County, Missouri	
MO144	Ray County, Missouri	
MO145	Raymore City, Missouri	
MO146	Raytown City, Missouri	

State ID	Qualifying Subdivision	Consolidated State Allocation
MO147	Republic City, Missouri	
MO148	Reynolds County, Missouri	
MO149	Ripley County, Missouri	
MO150	Rolla City, Missouri	
MO151	Saline County, Missouri	
MO152	Schuyler County, Missouri	
MO153	Scotland County, Missouri	
MO154	Scott County, Missouri	
MO155	Sedalia City, Missouri	
MO156	Shannon County, Missouri	
MO157	Shelby County, Missouri	
MO158	Sikeston City, Missouri	
MO159	Smithville City, Missouri	
MO160	Springfield City, Missouri	
MO161	St Charles County, Missouri	
MO162	St Clair County, Missouri	
MO163	St Francois County, Missouri	
MO164	St Louis County, Missouri	Allocations in Missouri
MO165	St. Ann City, Missouri	will be made in
MO166	St. Charles City, Missouri	accordance with the
MO167	St. Joseph City, Missouri	Memorandum of
MO168	St. Louis City, Missouri	Understanding Between
MO169	St. Peters City, Missouri	the State of Missouri and
MO170	Ste Genevieve County, Missouri	its Political Subdivisions
MO171	Stoddard County, Missouri	on Proceeds Relating to
MO172	Stone County, Missouri	the Settlement of Opioid
MO173	Sullivan County, Missouri	Litigation and with the
MO174	Taney County, Missouri	ancillary Memorandum
MO175	Texas County, Missouri	of Understanding
MO176	Town and Country City, Missouri	Between the Litigating
MO177	Troy City, Missouri	Subdivisions of the State
MO178	Union City, Missouri	of Missouri.
MO179	University City, Missouri	
MO180	Vernon County, Missouri	
MO181	Warren County, Missouri	
MO182	Warrensburg City, Missouri	
MO183	Washington City, Missouri	
MO184	Washington County, Missouri	
MO185	Wayne County, Missouri	
MO186	Webb City, Missouri	
MO187	Webster County, Missouri	
MO188	Webster Groves City, Missouri	
MO189	Wentzville City, Missouri	
MO190	West Plains City, Missouri	
MO191	Wildwood City, Missouri	
MO192	Worth County, Missouri	
MO193	Wright County, Missouri	
MO194	Northeast Ambulance and Fire Protection District, Missouri	

State ID	Qualifying Subdivision	Consolidated State Allocation
MO195	Kinloch Fire Protection District, Missouri	Allocations in Missouri will be made in accordance with the Memorandum of Understanding Between the State of Missouri and its Political Subdivisions on Proceeds Relating to the Settlement of Opioid Litigation and with the ancillary Memorandum of Understanding Between the Litigating Subdivisions of the State of Missouri.
MO196	Citizens Memorial Hospital District D/B/A Citizens Memorial Hospital, Missouri	

State ID	Qualifying Subdivision	Consolidated State Allocation
MT1	Anaconda-Deer Lodge County, Montana	1.4480190514%
MT2	Beaverhead County, Montana	0.6841480225%
MT3	Big Horn County, Montana	0.8504903609%
MT4	Billings City, Montana	9.1331142413%
MT5	Blaine County, Montana	0.3691094337%
MT6	Bozeman City, Montana	2.0161886507%
MT7	Broadwater County, Montana	0.4143251264%
MT8	Butte-Silver Bow, Montana	5.6101260434%
MT9	Carbon County, Montana	0.7105360522%
MT10	Carter County, Montana	0.0374679104%
MT11	Cascade County, Montana	3.8993050480%
MT12	Chouteau County, Montana	0.4053063424%
MT13	Custer County, Montana	1.5139056450%
MT14	Daniels County, Montana	0.1787602908%
MT15	Dawson County, Montana	0.7800682133%
MT16	Fallon County, Montana	0.1543582011%
MT17	Fergus County, Montana	0.8667027669%
MT18	Flathead County, Montana	8.0141785369%
MT19	Gallatin County, Montana	4.0205572717%
MT20	Garfield County, Montana	0.0398838599%
MT21	Glacier County, Montana	1.5230709367%
MT22	Golden Valley County, Montana	0.0264303648%
MT23	Granite County, Montana	0.1831398237%
MT24	Great Falls City, Montana	4.3577779784%
MT25	Helena City, Montana	1.7360655042%
MT26	Hill County, Montana	1.8438532922%
MT27	Jefferson County, Montana	0.7770843087%
MT28	Judith Basin County, Montana	0.0614804228%
MT29	Kalispell City, Montana	2.4735432710%
MT30	Lake County, Montana	3.6175099064%
MT31	Lewis and Clark County, Montana	4.9326712334%
MT32	Liberty County, Montana	0.1210395973%
MT33	Lincoln County, Montana	2.1915597624%
MT34	Madison County, Montana	0.5498047673%
MT35	McCone County, Montana	0.0823035394%
MT36	Meagher County, Montana	0.0912086373%
MT37	Mineral County, Montana	0.7546909914%
MT38	Missoula City, Montana	4.4312558575%
MT39	Missoula County, Montana	8.0272833629%
MT40	Musselshell County, Montana	0.3895510594%
MT41	Park County, Montana	2.0831835653%
MT42	Petroleum County, Montana	0.0144742922%
MT43	Phillips County, Montana	0.2085622347%
MT44	Pondera County, Montana	0.4003873948%
MT45	Powder River County, Montana	0.1504386452%
MT46	Powell County, Montana	0.8872723490%
MT47	Prairie County, Montana	0.0572069653%
MT48	Ravalli County, Montana	3.6906819270%

State ID	Qualifying Subdivision	Consolidated State Allocation
MT49	Richland County, Montana	0.7541525281%
MT50	Roosevelt County, Montana	0.8182976782%
MT51	Rosebud County, Montana	0.5641981949%
MT52	Sanders County, Montana	1.0679134558%
MT53	Sheridan County, Montana	0.2700355225%
MT54	Stillwater County, Montana	0.5055604014%
MT55	Sweet Grass County, Montana	0.2836540766%
MT56	Teton County, Montana	0.5735903832%
MT57	Toole County, Montana	0.3258040487%
MT58	Treasure County, Montana	0.0226554138%
MT59	Valley County, Montana	0.5598291268%
MT60	Wheatland County, Montana	0.0720998508%
MT61	Wibaux County, Montana	0.0630373047%
MT62	Yellowstone County, Montana	7.3090889550%

State ID	Qualifying Subdivision	Consolidated State Allocation
NE1	Adams County, Nebraska	0.7130410264%
NE2	Antelope County, Nebraska	0.2406339800%
NE3	Arthur County, Nebraska	0.0110831278%
NE4	Banner County, Nebraska	0.0183674606%
NE5	Beatrice City, Nebraska	0.9248205382%
NE6	Bellevue City, Nebraska	2.4787880023%
NE7	Blaine County, Nebraska	0.0123640997%
NE8	Boone County, Nebraska	0.2533407507%
NE9	Box Butte County, Nebraska	0.7492533620%
NE10	Boyd County, Nebraska	0.0902847433%
NE11	Brown County, Nebraska	0.1375135354%
NE12	Buffalo County, Nebraska	0.9630320332%
NE13	Burt County, Nebraska	0.3365661770%
NE14	Butler County, Nebraska	0.2899805672%
NE15	Cass County, Nebraska	1.2356339344%
NE16	Cedar County, Nebraska	0.3502588009%
NE17	Chase County, Nebraska	0.1707898814%
NE18	Cherry County, Nebraska	0.3082161558%
NE19	Cheyenne County, Nebraska	0.7408263023%
NE20	Clay County, Nebraska	0.1772971991%
NE21	Colfax County, Nebraska	0.2670475913%
NE22	Columbus City, Nebraska	0.7291294061%
NE23	Cuming County, Nebraska	0.4019883978%
NE24	Custer County, Nebraska	0.4848137961%
NE25	Dakota County, Nebraska	0.3940917673%
NE26	Dawes County, Nebraska	0.6577293164%
NE27	Dawson County, Nebraska	0.7540316373%
NE28	Deuel County, Nebraska	0.1500055852%
NE29	Dixon County, Nebraska	0.2144571499%
NE30	Dodge County, Nebraska	1.8317996330%
NE31	Douglas County, Nebraska	14.9119111455%
NE32	Dundy County, Nebraska	0.1513630330%
NE33	Fillmore County, Nebraska	0.3541443667%
NE34	Franklin County, Nebraska	0.1630162987%
NE35	Fremont City, Nebraska	0.1476946393%
NE36	Frontier County, Nebraska	0.0732649260%
NE37	Furnas County, Nebraska	0.2315426581%
NE38	Gage County, Nebraska	0.5390651380%
NE39	Garden County, Nebraska	0.1132118364%
NE40	Garfield County, Nebraska	0.1104479177%
NE41	Gosper County, Nebraska	0.0528581072%
NE42	Grand Island City, Nebraska	1.5052861196%
NE43	Grant County, Nebraska	0.0167075406%
NE44	Greeley County, Nebraska	0.1006996872%
NE45	Hall County, Nebraska	1.3023214397%
NE46	Hamilton County, Nebraska	0.3285553228%
NE47	Harlan County, Nebraska	0.1831157431%
NE48	Hastings City, Nebraska	0.7738158635%
NE49	Hayes County, Nebraska	0.0464208924%

State ID	Qualifying Subdivision	Consolidated State Allocation
NE50	Hitchcock County, Nebraska	0.1428727336%
NE51	Holt County, Nebraska	0.4319086269%
NE52	Hooker County, Nebraska	0.0195391111%
NE53	Howard County, Nebraska	0.3117590505%
NE54	Jefferson County, Nebraska	0.4621587809%
NE55	Johnson County, Nebraska	0.3674281385%
NE56	Kearney City, Nebraska	1.3128662946%
NE57	Kearney County, Nebraska	0.3284087439%
NE58	Keith County, Nebraska	0.5586120928%
NE59	Keya Paha County, Nebraska	0.0207700795%
NE60	Kimball County, Nebraska	0.2074517582%
NE61	Knox County, Nebraska	0.4262180329%
NE62	La Vista City, Nebraska	0.6948539706%
NE63	Lancaster County, Nebraska	7.9530599340%
NE64	Lexington City, Nebraska	0.2672235840%
NE65	Lincoln City, Nebraska	8.9584993437%
NE66	Lincoln County, Nebraska	0.7588461895%
NE67	Logan County, Nebraska	0.0192253637%
NE68	Loup County, Nebraska	0.0163070224%
NE69	Madison County, Nebraska	1.0198085515%
NE70	McPherson County, Nebraska	0.0133651501%
NE71	Merrick County, Nebraska	0.5571149293%
NE72	Morrill County, Nebraska	0.2640807173%
NE73	Nance County, Nebraska	0.1820220392%
NE74	Nemaha County, Nebraska	0.5862140225%
NE75	Norfolk City, Nebraska	0.6855964607%
NE76	North Platte City, Nebraska	1.2668714124%
NE77	Nuckolls County, Nebraska	0.2606241030%
NE78	Omaha City, Nebraska	16.7836032733%
NE79	Otoe County, Nebraska	0.8114537890%
NE80	Papillion City, Nebraska	1.1943452635%
NE81	Pawnee County, Nebraska	0.2449303588%
NE82	Perkins County, Nebraska	0.0938742100%
NE83	Phelps County, Nebraska	0.4453164270%
NE84	Pierce County, Nebraska	0.2791606931%
NE85	Platte County, Nebraska	0.5054632790%
NE86	Polk County, Nebraska	0.2126035890%
NE87	Red Willow County, Nebraska	0.6782282985%
NE88	Richardson County, Nebraska	0.6780640713%
NE89	Rock County, Nebraska	0.0420632348%
NE90	Saline County, Nebraska	0.6431415318%
NE91	Sarpy County, Nebraska	4.1205096407%
NE92	Saunders County, Nebraska	0.9147340487%
NE93	Scotts Bluff County, Nebraska	1.8428925654%
NE94	Scottsbluff City, Nebraska	0.5159537183%
NE95	Seward County, Nebraska	0.7637450614%
NE96	Sheridan County, Nebraska	0.1814092513%
NE97	Sherman County, Nebraska	0.1198260243%
NE98	Sioux County, Nebraska	0.0355730752%

State ID	Qualifying Subdivision	Consolidated State Allocation
NE99	South Sioux City, Nebraska	0.4431368628%
NE100	Stanton County, Nebraska	0.2162062918%
NE101	Thayer County, Nebraska	0.2059575361%
NE102	Thomas County, Nebraska	0.0173570958%
NE103	Thurston County, Nebraska	0.2564159657%
NE104	Valley County, Nebraska	0.3103957199%
NE105	Washington County, Nebraska	0.7878555706%
NE106	Wayne County, Nebraska	0.3510034608%
NE107	Webster County, Nebraska	0.1652355715%
NE108	Wheeler County, Nebraska	0.0210156849%
NE109	York County, Nebraska	0.8321939645%
NE110	Region 1 Behavioral Health Authority, Nebraska	0.0000000000%
NE111	Region II Human Services, Nebraska	0.0000000000%
NE112	Region 3 Behavioral Health Services, Nebraska	0.0000000000%
NE113	Region 4 Behavioral Health System, Nebraska	0.0000000000%
NE114	Region V Systems, Nebraska	0.0000000000%
NE115	Region 6 Behavioral Healthcare, Nebraska	0.0000000000%

State ID	Qualifying Subdivision	Consolidated State Allocation
NV1	Boulder City, Nevada	0.1478660452%
NV2	Carson City, Nevada	1.8146007537%
NV3	Churchill County, Nevada	0.7013051988%
NV4	Clark County, Nevada	66.9248026834%
NV5	Douglas County, Nevada	1.6601462472%
NV7	Elko County, Nevada	1.0825745225%
NV8	Ely City, Nevada	0.0066172807%
NV9	Esmeralda County, Nevada	0.0497291448%
NV10	Eureka County, Nevada	0.1033573623%
NV11	Fernley City, Nevada	0.0144506991%
NV12	Henderson City, Nevada	2.3020643974%
NV13	Humboldt County, Nevada	1.0192724731%
NV14	Lander County, Nevada	0.3627438791%
NV15	Las Vegas City, Nevada	4.7206970773%
NV16	Lincoln County, Nevada	0.2373284219%
NV17	Lyon County, Nevada	1.5721396872%
NV18	Mesquite City, Nevada	0.1465069544%
NV19	Mineral County, Nevada	0.5992930253%
NV20	North Las Vegas City, Nevada	2.4258866892%
NV21	Nye County, Nevada	1.6016841576%
NV22	Pershing County, Nevada	0.3624498791%
NV23	Reno City, Nevada	1.3562863383%
NV24	Sparks City, Nevada	0.4253229218%
NV25	Storey County, Nevada	0.1263908620%
NV26	Washoe County, Nevada	9.1139488828%
NV27	West Wendover City, Nevada	0.0564015794%
NV28	White Pine County, Nevada	1.0458576594%
NV29	Central Lyon Fire Protection District, Nevada	0.0150922618%
NV30	North Lyon Fire Protection District, Nevada	0.0051829150%

State ID	Qualifying Subdivision	Consolidated State Allocation
NH3	Belknap County, New Hampshire	2.868905%
NH4	Belmont Town, New Hampshire	0.530951%
NH5	Berlin City, New Hampshire	0.684196%
NH6	Carroll County, New Hampshire	3.637455%
NH7	Cheshire County, New Hampshire	3.877305%
NH8	Claremont City, New Hampshire	0.940017%
NH9	Concord City, New Hampshire	3.191730%
NH11	Coos County, New Hampshire	1.585665%
NH12	Derry Town, New Hampshire	2.491200%
NH13	Dover City, New Hampshire	2.376792%
NH16	Franklin City, New Hampshire	0.634542%
NH18	Grafton County, New Hampshire	6.614598%
NH21	Hillsborough County, New Hampshire	15.676694%
NH24	Keene City, New Hampshire	1.673068%
NH25	Laconia City, New Hampshire	1.224729%
NH27	Londonderry Town, New Hampshire	1.874806%
NH28	Manchester City, New Hampshire	8.396484%
NH29	Merrimack County, New Hampshire	7.339228%
NH32	Nashua City, New Hampshire	6.629407%
NH36	Rochester City, New Hampshire	2.358716%
NH37	Rockingham County, New Hampshire	18.441209%
NH40	Strafford County, New Hampshire	4.766215%
NH41	Sullivan County, New Hampshire	2.186088%

State ID	Qualifying Subdivision	Consolidated State Allocation
NJ1	Aberdeen Township, New Jersey	0.0797396894%
NJ2	Asbury Park City, New Jersey	0.3916349671%
NJ3	Atlantic City, New Jersey	1.2847690915%
NJ4	Atlantic County, New Jersey	2.8915764045%
NJ5	Barnegat Township, New Jersey	0.1626638814%
NJ6	Bayonne City, New Jersey	0.8502340058%
NJ7	Beachwood Borough, New Jersey	0.0492329228%
NJ8	Belleville Township, New Jersey	0.0872090223%
NJ9	Bellmawr Borough, New Jersey	0.0640989992%
NJ10	Bergen County, New Jersey	4.9446361090%
NJ11	Bergenfield Borough, New Jersey	0.0618076073%
NJ12	Berkeley Heights Township, New Jersey	0.0272673062%
NJ13	Berkeley Township, New Jersey	0.2619731788%
NJ14	Bernards Township, New Jersey	0.0910577073%
NJ15	Bloomfield Township, New Jersey	0.1173874959%
NJ16	Bordentown Township, New Jersey	0.0545891482%
NJ17	Bound Brook Borough, New Jersey	0.0527105023%
NJ18	Branchburg Township, New Jersey	0.0561024563%
NJ19	Brick Township, New Jersey	0.5908193174%
NJ20	Bridgeton City, New Jersey	0.2079614154%
NJ21	Bridgewater Township, New Jersey	0.1828057629%
NJ22	Burlington County, New Jersey	4.4940916659%
NJ23	Burlington Township, New Jersey	0.1157900630%
NJ24	Camden City, New Jersey	1.6603828843%
NJ25	Camden County, New Jersey	6.8741218172%
NJ26	Cape May County, New Jersey	1.2842777540%
NJ27	Carteret Borough, New Jersey	0.1794847100%
NJ28	Cedar Grove Township, New Jersey	0.0187911021%
NJ29	Chatham Township, New Jersey	0.0498541051%
NJ30	Cherry Hill Township, New Jersey	0.3440044947%
NJ31	Cinnaminson Township, New Jersey	0.0701648926%
NJ32	Clark Township, New Jersey	0.0429898704%
NJ33	Cliffside Park Borough, New Jersey	0.1142449150%
NJ34	Clifton City, New Jersey	0.3535258812%
NJ35	Clinton Town, New Jersey	0.0294193343%
NJ36	Clinton Township, New Jersey	0.0799778554%
NJ37	Collingswood Borough, New Jersey	0.1128930571%
NJ38	Cranford Township, New Jersey	0.0684441330%
NJ39	Cumberland County, New Jersey	0.9862828059%
NJ40	Delran Township, New Jersey	0.0837486054%

State ID	Qualifying Subdivision	Consolidated State Allocation
NJ41	Denville Township, New Jersey	0.0795654377%
NJ42	Deptford Township, New Jersey	0.2200095463%
NJ43	Dover Town, New Jersey	0.1186530251%
NJ44	Dumont Borough, New Jersey	0.0403826120%
NJ45	East Brunswick Township, New Jersey	0.0972927881%
NJ46	East Greenwich Township, New Jersey	0.0212104162%
NJ47	East Hanover Township, New Jersey	0.0890156417%
NJ48	East Orange City, New Jersey	1.2844844553%
NJ49	East Windsor Township, New Jersey	0.0422463462%
NJ50	Eatontown Borough, New Jersey	0.0974794194%
NJ51	Edgewater Borough, New Jersey	0.0546948904%
NJ52	Edison Township, New Jersey	2.4018132631%
NJ53	Egg Harbor Township, New Jersey	0.1572891336%
NJ54	Elizabeth City, New Jersey	0.7646308101%
NJ55	Elmwood Park Borough, New Jersey	0.0462435391%
NJ56	Englewood City, New Jersey	0.6429812736%
NJ57	Essex County, New Jersey	1.4898498664%
NJ58	Evesham Township, New Jersey	0.1745115947%
NJ59	Ewing Township, New Jersey	0.0839796907%
NJ60	Fair Lawn Borough, New Jersey	0.0699332916%
NJ61	Fairview Borough, New Jersey	0.0347025484%
NJ62	Florence Township, New Jersey	0.0676007282%
NJ63	Florham Park Borough, New Jersey	0.0674975182%
NJ64	Fort Lee Borough, New Jersey	0.1848366682%
NJ65	Franklin Lakes Borough, New Jersey	0.0273076336%
NJ66	Franklin Township, Gloucester County, New Jersey	0.0870963870%
NJ67	Franklin Township, Somerset County, New Jersey	0.3236022203%
NJ68	Freehold Borough, New Jersey	0.0816675723%
NJ69	Freehold Township, New Jersey	0.1512818556%
NJ70	Galloway Township, New Jersey	0.0846515634%
NJ71	Garfield City, New Jersey	0.0989196224%
NJ72	Glassboro Borough, New Jersey	0.1948186777%
NJ73	Glen Rock Borough, New Jersey	0.0253178060%
NJ74	Gloucester City, New Jersey	0.1325275640%
NJ75	Gloucester County, New Jersey	4.7022029491%
NJ76	Gloucester Township, New Jersey	0.3259502581%
NJ77	Guttenberg Town, New Jersey	0.0382186733%
NJ78	Hackensack City, New Jersey	0.2554139785%
NJ79	Haddon Township, New Jersey	0.0831057121%
NJ80	Haddonfield Borough, New Jersey	0.0710479214%

State ID	Qualifying Subdivision	Consolidated State Allocation
NJ81	Hamilton Township, Atlantic County, New Jersey	0.0939608561%
NJ82	Hamilton Township, Mercer County, New Jersey	0.1394262176%
NJ83	Hammonton Town, New Jersey	0.0463451547%
NJ84	Hanover Township, New Jersey	0.0711651990%
NJ85	Harrison Town, New Jersey	0.2059190684%
NJ86	Harrison Township, New Jersey	0.0478487561%
NJ87	Hasbrouck Heights Borough, New Jersey	0.0360845581%
NJ88	Hawthorne Borough, New Jersey	0.0380122534%
NJ89	Hazlet Township, New Jersey	0.0810519234%
NJ90	Highland Park Borough, New Jersey	0.0606246554%
NJ91	Hillsborough Township, New Jersey	0.1405113053%
NJ92	Hillsdale Borough, New Jersey	0.0247027667%
NJ93	Hillside Township, New Jersey	0.1085603967%
NJ94	Hoboken City, New Jersey	0.1803633309%
NJ95	Holmdel Township, New Jersey	0.1058875828%
NJ96	Hopatcong Borough, New Jersey	0.0677558479%
NJ97	Hopewell Township, Mercer County, New Jersey	0.0275878151%
NJ98	Howell Township, New Jersey	0.2067529072%
NJ99	Hudson County, New Jersey	0.9363280231%
NJ100	Hunterdon County, New Jersey	0.8037645396%
NJ101	Irvington Township, New Jersey	0.9244040630%
NJ102	Jackson Township, New Jersey	0.2670097394%
NJ103	Jefferson Township, New Jersey	0.0866198206%
NJ104	Jersey City, New Jersey	0.9916102863%
NJ105	Kearny Town, New Jersey	0.1071857960%
NJ106	Lacey Township, New Jersey	0.1502291236%
NJ107	Lakewood Township, New Jersey	0.7730028665%
NJ108	Lawrence Township, Mercer County, New Jersey	0.0644503163%
NJ109	Lincoln Park Borough, New Jersey	0.0595261565%
NJ110	Linden City, New Jersey	0.2495261821%
NJ111	Lindenwold Borough, New Jersey	0.1004455914%
NJ112	Little Egg Harbor Township, New Jersey	0.1465902816%
NJ113	Little Falls Township, New Jersey	0.0348320180%
NJ114	Little Ferry Borough, New Jersey	0.0258966914%
NJ115	Livingston Township, New Jersey	0.0484285793%
NJ116	Lodi Borough, New Jersey	0.1078340351%
NJ117	Long Branch City, New Jersey	0.5243184480%
NJ118	Lower Township, New Jersey	0.0710329159%
NJ119	Lumberton Township, New Jersey	0.0461973502%
NJ120	Lyndhurst Township, New Jersey	0.0645354727%
NJ121	Madison Borough, New Jersey	0.1424930674%

State ID	Qualifying Subdivision	Consolidated State Allocation
NJ122	Mahwah Township, New Jersey	0.0610985020%
NJ123	Manalapan Township, New Jersey	0.1318410608%
NJ124	Manchester Township, New Jersey	0.2136801182%
NJ125	Mantua Township, New Jersey	0.0853984170%
NJ126	Manville Borough, New Jersey	0.0574532358%
NJ127	Maple Shade Township, New Jersey	0.1058088976%
NJ128	Maplewood Township, New Jersey	0.0589307182%
NJ129	Marlboro Township, New Jersey	0.1588151495%
NJ130	Medford Township, New Jersey	0.1130775783%
NJ131	Mercer County, New Jersey	1.1117204895%
NJ132	Metuchen Borough, New Jersey	0.0339468322%
NJ133	Middle Township, New Jersey	0.0695160908%
NJ134	Middlesex Borough, New Jersey	0.0317606196%
NJ135	Middlesex County, New Jersey	2.2387299770%
NJ136	Middletown Township, New Jersey	0.3292948041%
NJ137	Millburn Township, New Jersey	0.0627532842%
NJ138	Millstone Township, New Jersey	0.0066098909%
NJ139	Millville City, New Jersey	0.2397981412%
NJ140	Monmouth County, New Jersey	4.4617935668%
NJ141	Monroe Township, Gloucester County, New Jersey	0.2271632002%
NJ142	Monroe Township, Middlesex County, New Jersey	0.1024216796%
NJ143	Montclair Township, New Jersey	0.5843666564%
NJ144	Montgomery Township, New Jersey	0.0805666350%
NJ145	Montville Township, New Jersey	0.0902727303%
NJ146	Moorestown Township, New Jersey	0.1000871936%
NJ147	Morris County, New Jersey	2.3575766204%
NJ148	Morris Township, New Jersey	0.1125747053%
NJ149	Morristown, New Jersey	0.2369807115%
NJ150	Mount Laurel Township, New Jersey	0.1725831491%
NJ151	Mount Olive Township, New Jersey	0.1068809023%
NJ152	Neptune Township, New Jersey	0.2450351195%
NJ153	New Brunswick City, New Jersey	1.8327331194%
NJ154	New Milford Borough, New Jersey	0.0368443070%
NJ155	New Providence Borough, New Jersey	0.0258412178%
NJ156	Newark City, New Jersey	1.7760400546%
NJ157	North Arlington Borough, New Jersey	0.0408890956%

State ID	Qualifying Subdivision	Consolidated State Allocation
NJ158	North Bergen Township, New Jersey	0.1110635074%
NJ159	North Brunswick Township, New Jersey	0.1217197343%
NJ160	North Plainfield Borough, New Jersey	0.1454941742%
NJ161	Nutley Township, New Jersey	0.0574061090%
NJ162	Oakland Borough, New Jersey	0.0335231134%
NJ163	Ocean City, New Jersey	0.1910428164%
NJ164	Ocean County, New Jersey	4.9497293624%
NJ165	Ocean Township, Monmouth County, New Jersey	0.1387263032%
NJ166	Old Bridge Township, New Jersey	0.1263966779%
NJ167	Orange City Township, New Jersey	0.5609302630%
NJ168	Palisades Park Borough, New Jersey	0.0366345109%
NJ169	Paramus Borough, New Jersey	0.1129786355%
NJ170	Parsippany-Troy Hills Township, New Jersey	0.2342890939%
NJ171	Passaic City, New Jersey	0.4984612868%
NJ172	Passaic County, New Jersey	2.1805505203%
NJ173	Paterson City, New Jersey	0.9805526614%
NJ174	Pemberton Township, New Jersey	0.1182059071%
NJ175	Pennsauken Township, New Jersey	0.3221185950%
NJ176	Pennsville Township, New Jersey	0.0340920576%
NJ177	Pequannock Township, New Jersey	0.0769477223%
NJ178	Perth Amboy City, New Jersey	0.3436749356%
NJ179	Phillipsburg Town, New Jersey	0.1544595119%
NJ180	Pine Hill Borough, New Jersey	0.0482528270%
NJ181	Piscataway Township, New Jersey	0.1067019613%
NJ182	Plainfield City, New Jersey	0.3012229667%
NJ183	Plainsboro Township, New Jersey	0.0503298743%
NJ184	Pleasantville City, New Jersey	0.1421175070%
NJ185	Point Pleasant Borough, New Jersey	0.1109970141%
NJ186	Pompton Lakes Borough, New Jersey	0.0290573727%
NJ187	Princeton, New Jersey	0.0503970240%
NJ188	Rahway City, New Jersey	0.1444485698%
NJ189	Ramsey Borough, New Jersey	0.0402523452%
NJ190	Randolph Township, New Jersey	0.0853331898%
NJ191	Raritan Township, New Jersey	0.1071670391%
NJ192	Readington Township, New Jersey	0.0850076166%
NJ193	Red Bank Borough, New Jersey	0.1420636747%
NJ194	Ridgefield Borough, New Jersey	0.0201153405%

State ID	Qualifying Subdivision	Consolidated State Allocation
NJ195	Ridgefield Park Village, New Jersey	0.0392827532%
NJ196	Ridgewood Village, New Jersey	0.0849185213%
NJ197	Ringwood Borough, New Jersey	0.0309822545%
NJ198	River Edge Borough, New Jersey	0.0266057498%
NJ199	Robbinsville Township, New Jersey	0.0338593312%
NJ200	Rockaway Township, New Jersey	0.1290497970%
NJ201	Roselle Borough, New Jersey	0.0912325687%
NJ202	Roselle Park Borough, New Jersey	0.0316673040%
NJ203	Roxbury Township, New Jersey	0.1057717120%
NJ204	Rutherford Borough, New Jersey	0.0459830524%
NJ205	Saddle Brook Township, New Jersey	0.0390656888%
NJ206	Salem County, New Jersey	0.9344056735%
NJ207	Sayreville Borough, New Jersey	0.1477057086%
NJ208	Scotch Plains Township, New Jersey	0.0484433504%
NJ209	Secaucus Town, New Jersey	0.0516659295%
NJ210	Somers Point City, New Jersey	0.0439926621%
NJ211	Somerset County, New Jersey	1.4647125488%
NJ212	Somerville Borough, New Jersey	0.0756287358%
NJ213	South Brunswick Township, New Jersey	0.1037777110%
NJ214	South Orange Village Township, New Jersey	0.0488891085%
NJ215	South Plainfield Borough, New Jersey	0.0899775902%
NJ216	South River Borough, New Jersey	0.0421568288%
NJ217	Southampton Township, New Jersey	0.0127996268%
NJ218	Sparta Township, New Jersey	0.1069549921%
NJ219	Springfield Township, Union County, New Jersey	0.0573437423%
NJ220	Stafford Township, New Jersey	0.2155115906%
NJ221	Summit City, New Jersey	0.5428090174%
NJ222	Sussex County, New Jersey	1.2735318221%
NJ223	Teaneck Township, New Jersey	0.1723477966%
NJ224	Tenafly Borough, New Jersey	0.0450713724%
NJ225	Tinton Falls Borough, New Jersey	0.0881640307%
NJ226	Toms River Township, New Jersey	0.5620940829%
NJ227	Totowa Borough, New Jersey	0.0342545863%
NJ228	Trenton City, New Jersey	1.9352906929%
NJ229	Union City, New Jersey	0.9841875644%
NJ230	Union County, New Jersey	1.7400474523%
NJ231	Union Township, Union County, New Jersey	0.2247240506%
NJ232	Upper Township, New Jersey	0.0173930552%

State ID	Qualifying Subdivision	Consolidated State Allocation
NJ233	Vernon Township, New Jersey	0.0783616187%
NJ234	Verona Township, New Jersey	0.0234318917%
NJ235	Vineland City, New Jersey	0.5000169856%
NJ236	Voorhees Township, New Jersey	0.1406021825%
NJ237	Waldwick Borough, New Jersey	0.0421770394%
NJ238	Wall Township, New Jersey	0.1650847899%
NJ239	Wallington Borough, New Jersey	0.0235956865%
NJ240	Wanaque Borough, New Jersey	0.0311245257%
NJ241	Wantage Township, New Jersey	0.0091403397%
NJ242	Warren County, New Jersey	1.0382472049%
NJ243	Warren Township, New Jersey	0.0736326246%
NJ244	Washington Township, Gloucester County, New Jersey	0.2470375143%
NJ245	Washington Township, Morris County, New Jersey	0.0524274135%
NJ246	Waterford Township, New Jersey	0.0648566849%
NJ247	Wayne Township, New Jersey	0.1724444886%
NJ248	Weehawken Township, New Jersey	0.0282451513%
NJ249	West Caldwell Township, New Jersey	0.0246748189%
NJ250	West Deptford Township, New Jersey	0.1402059895%
NJ251	West Milford Township, New Jersey	0.0644752630%
NJ252	West New York Town, New Jersey	0.6157331463%
NJ253	West Orange Township, New Jersey	0.1051193933%
NJ254	West Windsor Township, New Jersey	0.0458605228%
NJ255	Westfield Town, New Jersey	0.0887745684%
NJ256	Westwood Borough, New Jersey	0.0348328152%
NJ257	Willingboro Township, New Jersey	0.2091808026%
NJ258	Winslow Township, New Jersey	0.1817978600%
NJ259	Woodbridge Township, New Jersey	0.3688029685%
NJ260	Woodland Park Borough, New Jersey	0.0292498655%
NJ261	Woolwich Township, New Jersey	0.0599291958%
NJ262	Wyckoff Township, New Jersey	0.0296665036%

State ID	Qualifying Subdivision	Consolidated State Allocation
NY1	Albany City, New York	
NY2	Albany County, New York	
NY3	Allegany County, New York	
NY4	Broome County, New York	
NY5	Buffalo City, New York	
NY6	Cattaraugus County, New York	
NY7	Cayuga County, New York	
NY8	Chautauqua County, New York	
NY9	Chemung County, New York	
NY10	Chenango County, New York	
NY11	Clinton County, New York	
NY12	Columbia County, New York	
NY13	Cortland County, New York	
NY14	Delaware County, New York	
NY15	Dutchess County, New York	
NY16	Erie County, New York	
NY17	Essex County, New York	
NY18	Franklin County, New York	
NY19	Fulton County, New York	
NY20	Genesee County, New York	
NY21	Greene County, New York	
NY22	Hamilton County, New York	Allocations in New York will be made in accordance with the New York Agreement.
NY23	Herkimer County, New York	
NY24	Jefferson County, New York	
NY25	Lewis County, New York	
NY26	Livingston County, New York	
NY27	Madison County, New York	
NY28	Monroe County, New York	
NY29	Montgomery County, New York	
NY30	Nassau County, New York	
NY31	New York City, New York	
NY32	Niagara County, New York	
NY33	Oneida County, New York	
NY34	Onondaga County, New York	
NY35	Ontario County, New York	
NY36	Orange County, New York	
NY37	Orleans County, New York	
NY38	Oswego County, New York	
NY39	Otsego County, New York	
NY40	Putnam County, New York	
NY41	Rensselaer County, New York	
NY42	Rochester City, New York	
NY43	Rockland County, New York	
NY44	Saratoga County, New York	
NY45	Schenectady County, New York	
NY46	Schoharie County, New York	
NY47	Schuyler County, New York	

State ID	Qualifying Subdivision	Consolidated State Allocation
NY48	Seneca County, New York	
NY49	St Lawrence County, New York	
NY50	Steuben County, New York	
NY51	Suffolk County, New York	
NY52	Sullivan County, New York	
NY53	Syracuse City, New York	
NY54	Tioga County, New York	
NY55	Tompkins County, New York	
NY56	Ulster County, New York	
NY57	Warren County, New York	
NY58	Washington County, New York	
NY59	Wayne County, New York	
NY60	Westchester County, New York	
NY61	Wyoming County, New York	
NY62	Yates County, New York	
NY63	Yonkers City, New York	Allocations in New York will be made in accordance with the New York Agreement.
NY64	Geneva City, New York	
NY65	Herkimer Village, New York	
NY66	Lackawanna City, New York	
NY67	Rome City, New York	
NY68	Utica City, New York	
NY69	Plattsburgh City, New York	
NY70	Saratoga Springs City, New York	
NY71	Schenectady City, New York	
NY72	Troy City, New York	
NY73	Amherst Town, New York	
NY74	Amsterdam City, New York	
NY75	Auburn City, New York	
NY76	Cheektowaga Town, New York	
NY77	Ithaca City, New York	
NY78	Lancaster Town, New York	
NY79	Mount Vernon City, New York	
NY80	Ogdensburg City, New York	
NY81	Poughkeepsie City, New York	
NY82	Tonawanda Town, New York	

State ID	Qualifying Subdivision	Consolidated State Allocation
NC1	Alamance County, North Carolina	1.3780289676%
NC2	Alexander County, North Carolina	0.5100078796%
NC3	Alleghany County, North Carolina	0.1490905989%
NC4	Anson County, North Carolina	0.1821929604%
NC5	Ashe County, North Carolina	0.3386391883%
NC6	Asheville City, North Carolina	0.2358147243%
NC7	Avery County, North Carolina	0.2659967669%
NC8	Beaufort County, North Carolina	0.4778884349%
NC9	Bertie County, North Carolina	0.1394685751%
NC10	Bladen County, North Carolina	0.4292178095%
NC11	Brunswick County, North Carolina	2.1132385076%
NC12	Buncombe County, North Carolina	2.5115878573%
NC13	Burke County, North Carolina	2.0901968270%
NC14	Cabarrus County, North Carolina	1.6695734466%
NC15	Caldwell County, North Carolina	1.2763011462%
NC16	Camden County, North Carolina	0.0730364004%
NC17	Canton Town, North Carolina	0.0114538232%
NC18	Carteret County, North Carolina	1.1284655939%
NC19	Cary Town, North Carolina	0.1441516454%
NC20	Caswell County, North Carolina	0.1729202375%
NC21	Catawba County, North Carolina	2.0726952227%
NC22	Charlotte City, North Carolina	1.2474838144%
NC23	Chatham County, North Carolina	0.4498143831%
NC24	Cherokee County, North Carolina	0.7827591529%
NC25	Chowan County, North Carolina	0.1137055961%
NC26	Clay County, North Carolina	0.2244299489%
NC27	Cleveland County, North Carolina	1.1199280277%
NC28	Columbus County, North Carolina	1.2209369390%
NC29	Concord City, North Carolina	0.2274558703%
NC30	Craven County, North Carolina	1.3368601902%
NC31	Cumberland County, North Carolina	2.6372996596%
NC32	Currituck County, North Carolina	0.1867785513%
NC33	Dare County, North Carolina	0.5331267313%
NC34	Davidson County, North Carolina	1.9402695304%
NC35	Davie County, North Carolina	0.5131475269%
NC36	Duplin County, North Carolina	0.3827851474%
NC37	Durham City, North Carolina	0.3804050267%
NC38	Durham County, North Carolina	1.7979943624%
NC39	Edgecombe County, North Carolina	0.4171019390%
NC40	Fayetteville City, North Carolina	0.3097690552%
NC41	Forsyth County, North Carolina	3.0684508095%
NC42	Franklin County, North Carolina	0.5005036433%
NC43	Gaston County, North Carolina	3.0981738869%
NC44	Gastonia City, North Carolina	0.2577638238%
NC45	Gates County, North Carolina	0.0795675166%
NC46	Graham County, North Carolina	0.1834845617%
NC47	Granville County, North Carolina	0.5901034093%

State ID	Qualifying Subdivision	Consolidated State Allocation
NC48	Greene County, North Carolina	0.1232748186%
NC49	Greensboro City, North Carolina	0.5273916964%
NC50	Greenville City, North Carolina	0.1626564747%
NC51	Guilford County, North Carolina	3.3750152311%
NC52	Halifax County, North Carolina	0.4531611740%
NC53	Harnett County, North Carolina	0.9889807722%
NC54	Haywood County, North Carolina	0.8033151101%
NC55	Henderson City, North Carolina	0.0322534788%
NC56	Henderson County, North Carolina	1.3815950870%
NC57	Hertford County, North Carolina	0.2068430501%
NC58	Hickory City, North Carolina	0.0948758357%
NC59	High Point City, North Carolina	0.2064287629%
NC60	Hoke County, North Carolina	0.3324858046%
NC61	Hyde County, North Carolina	0.0272373541%
NC62	Iredell County, North Carolina	2.1159313745%
NC63	Jackson County, North Carolina	0.5077577313%
NC64	Jacksonville City, North Carolina	0.0950098698%
NC65	Johnston County, North Carolina	1.2508874682%
NC66	Jones County, North Carolina	0.0879669870%
NC67	Lee County, North Carolina	0.6531156836%
NC68	Lenoir County, North Carolina	0.6042825926%
NC69	Lincoln County, North Carolina	0.9268336271%
NC70	Macon County, North Carolina	0.2377764961%
NC71	Madison County, North Carolina	0.2328822206%
NC72	Martin County, North Carolina	0.5875445765%
NC73	McDowell County, North Carolina	0.4667676661%
NC74	Mecklenburg County, North Carolina	5.0383012599%
NC75	Mitchell County, North Carolina	0.3093141516%
NC76	Montgomery County, North Carolina	0.2260505430%
NC77	Moore County, North Carolina	0.9717391128%
NC78	Nash County, North Carolina	0.8456536396%
NC79	New Hanover County, North Carolina	2.8972648920%
NC80	Northampton County, North Carolina	0.1209962389%
NC81	Onslow County, North Carolina	1.6440013647%
NC82	Orange County, North Carolina	1.0558394190%
NC83	Pamlico County, North Carolina	0.1199361510%
NC84	Pasquotank County, North Carolina	0.3748162108%
NC85	Pender County, North Carolina	0.5857493319%
NC86	Perquimans County, North Carolina	0.1118331803%
NC87	Person County, North Carolina	0.4030242967%
NC88	Pitt County, North Carolina	1.3690080664%
NC89	Polk County, North Carolina	0.2661429860%
NC90	Raleigh City, North Carolina	0.5667246127%

State ID	Qualifying Subdivision	Consolidated State Allocation
NC91	Randolph County, North Carolina	1.5254339862%
NC92	Richmond County, North Carolina	0.7491328400%
NC93	Robeson County, North Carolina	1.3597353436%
NC94	Rockingham County, North Carolina	1.3653688375%
NC95	Rowan County, North Carolina	2.3352192879%
NC96	Rutherford County, North Carolina	0.9289416180%
NC97	Sampson County, North Carolina	0.6195137405%
NC98	Scotland County, North Carolina	0.4491482742%
NC99	Stanly County, North Carolina	0.7249742086%
NC100	Stokes County, North Carolina	0.6239531124%
NC101	Surry County, North Carolina	1.4108267061%
NC102	Swain County, North Carolina	0.2811629286%
NC103	Transylvania County, North Carolina	0.4975955095%
NC104	Tyrrell County, North Carolina	0.0414409072%
NC105	Union County, North Carolina	1.4667026799%
NC106	Vance County, North Carolina	0.5362582553%
NC107	Wake County, North Carolina	4.9024556672%
NC108	Warren County, North Carolina	0.1063905835%
NC109	Washington County, North Carolina	0.0747707205%
NC110	Watauga County, North Carolina	0.4696757999%
NC111	Wayne County, North Carolina	0.9706993331%
NC112	Wilkes County, North Carolina	1.9971771606%
NC113	Wilmington City, North Carolina	0.1194974940%
NC114	Wilson County, North Carolina	0.6464708415%
NC115	Winston-Salem City, North Carolina	0.4944599238%
NC116	Yadkin County, North Carolina	0.5621471451%
NC117	Yancey County, North Carolina	0.3821149769%

State ID	Qualifying Subdivision	Consolidated State Allocation
ND1	Adams County, North Dakota	0.3266859369%
ND2	Barnes County, North Dakota	1.1596409120%
ND3	Benson County, North Dakota	0.8243618844%
ND4	Billings County, North Dakota	0.0531198558%
ND5	Bismarck City, North Dakota	7.8720018475%
ND6	Bottineau County, North Dakota	0.6564106964%
ND7	Bowman County, North Dakota	0.3537618912%
ND8	Burke County, North Dakota	0.1340272238%
ND9	Burleigh County, North Dakota	5.9258321732%
ND10	Cass County, North Dakota	9.2593207065%
ND11	Cavalier County, North Dakota	0.4775832577%
ND12	Devils Lake City, North Dakota	0.3622623619%
ND13	Dickey County, North Dakota	0.6064663883%
ND14	Dickinson City, North Dakota	1.0573324109%
ND15	Divide County, North Dakota	0.1925705034%
ND16	Dunn County, North Dakota	0.5017615248%
ND17	Eddy County, North Dakota	0.2227970127%
ND18	Emmons County, North Dakota	0.7218887252%
ND19	Fargo City, North Dakota	12.8639966005%
ND20	Foster County, North Dakota	0.3938546507%
ND21	Golden Valley County, North Dakota	0.2278631874%
ND22	Grand Forks City, North Dakota	7.1999971538%
ND23	Grand Forks County, North Dakota	5.4639296523%
ND24	Grant County, North Dakota	0.2093626818%
ND25	Griggs County, North Dakota	0.2073426807%
ND26	Hettinger County, North Dakota	0.2096684753%
ND27	Jamestown City, North Dakota	0.7024664288%
ND28	Kidder County, North Dakota	0.3074782839%
ND29	La Moure County, North Dakota	0.3036088203%
ND30	Lisbon City, North Dakota	0.1372424658%
ND31	Logan County, North Dakota	0.1641331799%
ND32	Mandan City, North Dakota	1.1262932510%
ND33	McHenry County, North Dakota	0.3973374621%
ND34	McIntosh County, North Dakota	0.2870077627%
ND35	McKenzie County, North Dakota	1.2312553926%
ND36	McLean County, North Dakota	1.1384661837%
ND37	Mercer County, North Dakota	1.1241071216%
ND38	Minot City, North Dakota	2.8909627339%
ND39	Morton County, North Dakota	2.6703636118%
ND40	Mountrail County, North Dakota	1.1142893867%
ND41	Nelson County, North Dakota	0.4740975060%
ND42	Oliver County, North Dakota	0.2228234756%
ND43	Pembina County, North Dakota	1.2530005434%
ND44	Pierce County, North Dakota	0.7284574044%
ND45	Ramsey County, North Dakota	1.2734343106%
ND46	Ransom County, North Dakota	0.6183673413%
ND47	Renville County, North Dakota	0.2860845016%

State ID	Qualifying Subdivision	Consolidated State Allocation
ND48	Richland County, North Dakota	2.4309493698%
ND49	Rolette County, North Dakota	1.8198034592%
ND50	Sargent County, North Dakota	0.5773674924%
ND51	Sheridan County, North Dakota	0.0895886685%
ND52	Sioux County, North Dakota	0.6666209643%
ND53	Slope County, North Dakota	0.0470907257%
ND54	Stark County, North Dakota	3.3526741338%
ND55	Steele County, North Dakota	0.2434939387%
ND56	Stutsman County, North Dakota	1.9758860377%
ND57	Towner County, North Dakota	0.1807489391%
ND58	Traill County, North Dakota	1.0587643476%
ND59	Walsh County, North Dakota	2.0521094729%
ND60	Ward County, North Dakota	3.4849842097%
ND61	Wells County, North Dakota	0.4346604383%
ND62	West Fargo City, North Dakota	1.8417059171%
ND63	Williams County, North Dakota	2.3067369406%
ND64	Williston City, North Dakota	1.5016973817%

State ID	Qualifying Subdivision	Consolidated State Allocation
OH1	Aberdeen Village, Ohio	0.0087437716%
OH2	Ada Village, Ohio	0.0077636351%
OH3	Adams County, Ohio	0.3473544585%
OH4	Adams Township, Champaign County, Ohio	0.0001374611%
OH5	Adams Township, Clinton County, Ohio	0.0003122525%
OH6	Adams Township, Darke County, Ohio	0.0016731027%
OH7	Adams Township, Monroe County, Ohio	0.0000311703%
OH8	Adams Township, Muskingum County, Ohio	0.0001003092%
OH9	Adams Township, Seneca County, Ohio	0.0003810303%
OH10	Adams Township, Washington County, Ohio	0.0001169753%
OH11	Adamsville Village, Ohio	0.0000910884%
OH12	Addyston Village, Ohio	0.0025217854%
OH13	Adelphi Village, Ohio	0.0020068066%
OH14	Adena Village, Ohio	0.0003568983%
OH15	Aid Township, Ohio	0.0003303244%
OH16	Akron City, Ohio	0.8812077621%
OH17	Albany Village, Ohio	0.0019488925%
OH18	Alexander Township, Ohio	0.0001250626%
OH19	Alexandria Village, Ohio	0.0005560173%
OH20	Alger Village, Ohio	0.0005166462%
OH21	Allen County, Ohio	0.4092999560%
OH22	Allen Township, Darke County, Ohio	0.0006643202%
OH23	Allen Township, Hancock County, Ohio	0.0005903230%
OH24	Allen Township, Ottawa County, Ohio	0.0005976710%
OH25	Allen Township, Union County, Ohio	0.0028518922%
OH26	Alliance City, Ohio	0.0889490116%
OH27	Amanda Township, Fairfield County, Ohio	0.0018577114%
OH28	Amanda Township, Hancock County, Ohio	0.0001616361%
OH29	Amanda Village, Ohio	0.0005782400%
OH30	Amberley Village, Ohio	0.0192140009%
OH31	Amboy Township, Ohio	0.0017244001%
OH32	Amelia Village, Ohio	0.0138770427%
OH33	American Township, Ohio	0.0193901533%
OH34	Ames Township, Ohio	0.0004272973%
OH35	Amesville Village, Ohio	0.0000937970%
OH36	Amherst City, Ohio	0.0344767089%

State ID	Qualifying Subdivision	Consolidated State Allocation
OH37	Amherst Township, Ohio	0.0134400730%
OH38	Amsterdam Village, Ohio	0.0003984552%
OH39	Anderson Township, Ohio	0.0760877775%
OH40	Andover Township, Ohio	0.0010566751%
OH41	Andover Village, Ohio	0.0040505880%
OH42	Anna Village, Ohio	0.0028751504%
OH43	Ansonia Village, Ohio	0.0014885693%
OH44	Antioch Village, Ohio	0.0000311703%
OH45	Antwerp Village, Ohio	0.0009282725%
OH46	Apple Creek Village, Ohio	0.0004832518%
OH47	Aquilla Village, Ohio	0.0000095709%
OH48	Arcadia Village, Ohio	0.0000210830%
OH49	Arcanum Village, Ohio	0.0034200188%
OH50	Archbold Village, Ohio	0.0168893369%
OH51	Arlington Heights Village, Ohio	0.0024048815%
OH52	Arlington Village, Ohio	0.0017280808%
OH53	Ashland City, Ohio	0.0677959091%
OH54	Ashland County, Ohio	0.2064379332%
OH55	Ashley Village, Ohio	0.0012125812%
OH56	Ashtabula City, Ohio	0.0931048204%
OH57	Ashtabula County, Ohio	0.7429130666%
OH58	Ashtabula Township, Ohio	0.0174821031%
OH59	Ashville Village, Ohio	0.0024582550%
OH60	Athalia Village, Ohio	0.0000173855%
OH61	Athens City, Ohio	0.0700871751%
OH62	Athens County, Ohio	0.4584170235%
OH63	Athens Township, Athens County, Ohio	0.0025846274%
OH64	Athens Township, Harrison County, Ohio	0.0003148983%
OH65	Attica Village, Ohio	0.0007921419%
OH66	Atwater Township, Ohio	0.0004753019%
OH67	Auburn Township, Crawford County, Ohio	0.0007613308%
OH68	Auburn Township, Geauga County, Ohio	0.0067953249%
OH69	Auburn Township, Tuscarawas County, Ohio	0.0000098536%
OH70	Auglaize County, Ohio	0.1648586210%
OH71	Auglaize Township, Allen County, Ohio	0.0010226874%
OH72	Auglaize Township, Paulding County, Ohio	0.0000730923%
OH73	Augusta Township, Ohio	0.0004684152%
OH74	Aurelius Township, Ohio	0.0000083554%
OH75	Aurora City, Ohio	0.0294524674%
OH76	Austinburg Township, Ohio	0.0004813742%
OH77	Austintown Township, Ohio	0.0890063352%
OH78	Avon City, Ohio	0.0729757005%

State ID	Qualifying Subdivision	Consolidated State Allocation
OH79	Avon Lake City, Ohio	0.0663140992%
OH80	Bailey Lakes Village, Ohio	0.0000813388%
OH81	Bainbridge Township, Ohio	0.0406379571%
OH82	Bainbridge Village, Ohio	0.0022724133%
OH83	Bairdstown Village, Ohio	0.0000612234%
OH84	Ballville Township, Ohio	0.0021521086%
OH85	Baltic Village, Ohio	0.0009410120%
OH86	Baltimore Village, Ohio	0.0031532207%
OH87	Barberton City, Ohio	0.1164193916%
OH88	Barlow Township, Ohio	0.0003258598%
OH89	Barnesville Village, Ohio	0.0106861443%
OH90	Barnhill Village, Ohio	0.0006601909%
OH91	Bartlow Township, Ohio	0.0001082864%
OH92	Batavia Township, Ohio	0.0000517157%
OH93	Batavia Village, Ohio	0.0047750818%
OH94	Batesville Village, Ohio	0.0000517432%
OH95	Bath Township, Allen County, Ohio	0.0088564730%
OH96	Bath Township, Greene County, Ohio	0.0001754181%
OH97	Bath Township, Summit County, Ohio	0.0489522386%
OH98	Baughman Township, Ohio	0.0001353105%
OH99	Bay Township, Ohio	0.0000549583%
OH100	Bay View Village, Ohio	0.0012986334%
OH101	Bay Village City, Ohio	0.0295102794%
OH102	Bazetta Township, Ohio	0.0331455317%
OH103	Beach City Village, Ohio	0.0006531299%
OH104	Beachwood City, Ohio	0.0573216138%
OH105	Beallsville Village, Ohio	0.0001580913%
OH106	Bearfield Township, Ohio	0.0005486478%
OH107	Beaver Township, Mahoning County, Ohio	0.0148139167%
OH108	Beaver Township, Pike County, Ohio	0.0003380168%
OH109	Beaver Village, Ohio	0.0001859093%
OH110	Beavercreek City, Ohio	0.0843658046%
OH111	Beavercreek Township, Ohio	0.1348759090%
OH112	Beaverdam Village, Ohio	0.0000749971%
OH113	Bedford City, Ohio	0.0429793572%
OH114	Bedford Heights City, Ohio	0.0386687782%
OH115	Bedford Township, Ohio	0.0000306151%
OH116	Bellaire Village, Ohio	0.0010264323%
OH117	Bellbrook City, Ohio	0.0237949542%
OH118	Belle Center Village, Ohio	0.0005231767%
OH119	Belle Valley Village, Ohio	0.0001073626%
OH120	Bellefontaine City, Ohio	0.0729400123%
OH121	Bellevue City, Ohio	0.0299834456%
OH122	Bellville Village, Ohio	0.0011239941%

State ID	Qualifying Subdivision	Consolidated State Allocation
OH123	Belmont County, Ohio	0.4904799617%
OH124	Belmont Village, Ohio	0.0011248573%
OH125	Belmore Village, Ohio	0.0002483511%
OH126	Beloit Village, Ohio	0.0037587550%
OH127	Belpre City, Ohio	0.0099429019%
OH128	Belpre Township, Ohio	0.0009358025%
OH129	Bennington Township, Licking County, Ohio	0.0005560173%
OH130	Bennington Township, Morrow County, Ohio	0.0001476031%
OH131	Bentleyville Village, Ohio	0.0019992236%
OH132	Benton Ridge Village, Ohio	0.0000914068%
OH133	Benton Township, Hocking County, Ohio	0.0001089904%
OH134	Benton Township, Ottawa County, Ohio	0.0007968947%
OH135	Benton Township, Paulding County, Ohio	0.0002485139%
OH136	Benton Township, Pike County, Ohio	0.0003718185%
OH137	Berea City, Ohio	0.0293403849%
OH138	Bergholz Village, Ohio	0.0002390731%
OH139	Berkey Village, Ohio	0.0003639406%
OH140	Berkshire Township, Ohio	0.0000742397%
OH141	Berlin Heights Village, Ohio	0.0009142379%
OH142	Berlin Township, Delaware County, Ohio	0.0000164977%
OH143	Berlin Township, Erie County, Ohio	0.0001350579%
OH144	Berlin Township, Holmes County, Ohio	0.0000814306%
OH145	Berlin Township, Mahoning County, Ohio	0.0014985886%
OH146	Bern Township, Ohio	0.0001354845%
OH147	Berne Township, Ohio	0.0001629571%
OH148	Bethel Township, Clark County, Ohio	0.0138134025%
OH149	Bethel Township, Monroe County, Ohio	0.0000498724%
OH150	Bethel Village, Ohio	0.0057576798%
OH151	Bethesda Village, Ohio	0.0006889751%
OH152	Bethlehem Township, Coshocton County, Ohio	0.0000765378%
OH153	Bethlehem Township, Stark County, Ohio	0.0015140738%
OH154	Bettsville Village, Ohio	0.0009525757%
OH155	Beverly Village, Ohio	0.0019551589%
OH156	Bexley City, Ohio	0.0458668476%
OH157	Big Island Township, Ohio	0.0005578783%

State ID	Qualifying Subdivision	Consolidated State Allocation
OH158	Black Creek Township, Ohio	0.0001534027%
OH159	Blakeslee Village, Ohio	0.0000628635%
OH160	Blanchard Township, Hancock County, Ohio	0.0001475808%
OH161	Blanchard Township, Putnam County, Ohio	0.0006457128%
OH162	Blanchester Village, Ohio	0.0114641267%
OH163	Blendon Township, Ohio	0.0282639366%
OH164	Bloom Township, Fairfield County, Ohio	0.0118551321%
OH165	Bloom Township, Morgan County, Ohio	0.0001713719%
OH166	Bloom Township, Scioto County, Ohio	0.0000852977%
OH167	Bloom Township, Seneca County, Ohio	0.0009926842%
OH168	Bloomdale Village, Ohio	0.0005693772%
OH169	Bloomfield Township, Jackson County, Ohio	0.0013260530%
OH170	Bloomfield Township, Logan County, Ohio	0.0000099754%
OH171	Bloomingburg Village, Ohio	0.0002078369%
OH172	Bloomingdale Village, Ohio	0.0002231349%
OH173	Bloominggrove Township, Ohio	0.0001784118%
OH174	Bloomville Village, Ohio	0.0004411930%
OH175	Blue Ash City, Ohio	0.0851895858%
OH176	Blue Creek Township, Ohio	0.0000767469%
OH177	Blue Rock Township, Ohio	0.0001103402%
OH178	Bluffton Village, Ohio	0.0052836661%
OH179	Boardman Township, Ohio	0.1408673271%
OH180	Bokescreek Township, Ohio	0.0013367015%
OH181	Bolivar Village, Ohio	0.0004434118%
OH182	Boston Heights Village, Ohio	0.0077201699%
OH183	Boston Township, Ohio	0.0003662503%
OH184	Botkins Village, Ohio	0.0019522626%
OH185	Bowerston Village, Ohio	0.0000572542%
OH186	Bowersville Village, Ohio	0.0000916319%
OH187	Bowling Green City, Ohio	0.0752741164%
OH188	Bowling Green Township, Ohio	0.0000370678%
OH189	Braceville Township, Ohio	0.0037680877%
OH190	Bradford Village, Ohio	0.0028661348%
OH191	Bradner Village, Ohio	0.0009183503%
OH192	Brady Lake Village, Ohio	0.0002559318%
OH193	Brady Township, Ohio	0.0005029083%
OH194	Bratenahl Village, Ohio	0.0051323943%
OH195	Bratton Township, Ohio	0.0000790580%
OH196	Brecksville City, Ohio	0.0241013127%
OH197	Bremen Village, Ohio	0.0006844200%
OH198	Brewster Village, Ohio	0.0058880648%

State ID	Qualifying Subdivision	Consolidated State Allocation
OH199	Brice Village, Ohio	0.0005574892%
OH200	Bridgeport Village, Ohio	0.0050477971%
OH201	Bridgewater Township, Ohio	0.0004164709%
OH202	Brighton Township, Ohio	0.0000194784%
OH203	Brimfield Township, Ohio	0.0111960000%
OH204	Bristol Township, Morgan County, Ohio	0.0001285289%
OH205	Bristol Township, Trumbull County, Ohio	0.0252513027%
OH206	Broadview Heights City, Ohio	0.0226789401%
OH207	Bronson Township, Ohio	0.0009334281%
OH208	Brook Park City, Ohio	0.0389572037%
OH209	Brookfield Township, Noble County, Ohio	0.0000517432%
OH210	Brookfield Township, Trumbull County, Ohio	0.0346459468%
OH211	Brooklyn City, Ohio	0.0212407634%
OH212	Brooklyn Heights Village, Ohio	0.0100909430%
OH213	Brookside Village, Ohio	0.0001124857%
OH214	Brookville City, Ohio	0.0216648650%
OH215	Broughton Village, Ohio	0.0000073092%
OH216	Brown County, Ohio	0.4653422837%
OH217	Brown Township, Carroll County, Ohio	0.0009477238%
OH218	Brown Township, Darke County, Ohio	0.0007873425%
OH219	Brown Township, Delaware County, Ohio	0.0000082489%
OH220	Brown Township, Franklin County, Ohio	0.0003894787%
OH221	Brown Township, Knox County, Ohio	0.0039027192%
OH222	Brown Township, Miami County, Ohio	0.0006132702%
OH223	Brown Township, Paulding County, Ohio	0.0001315662%
OH224	Brown Township, Vinton County, Ohio	0.0000390135%
OH225	Brunswick City, Ohio	0.1197413086%
OH226	Brunswick Hills Township, Ohio	0.0200631640%
OH227	Brush Creek Township, Jefferson County, Ohio	0.0001275057%
OH228	Brush Creek Township, Scioto County, Ohio	0.0011088700%
OH229	Brushcreek Township, Ohio	0.0059850824%
OH230	Bryan City, Ohio	0.0285400457%
OH231	Buchtel Village, Ohio	0.0001849243%
OH232	Buckeye Lake Village, Ohio	0.0040562680%
OH233	Buckland Village, Ohio	0.0001068314%

State ID	Qualifying Subdivision	Consolidated State Allocation
OH234	Bucks Township, Ohio	0.0002857543%
OH235	Bucyrus City, Ohio	0.0467130847%
OH236	Bucyrus Township, Ohio	0.0002175231%
OH237	Buffalo Township, Ohio	0.0000689910%
OH238	Burbank Village, Ohio	0.0001559017%
OH239	Burgoon Village, Ohio	0.0001532454%
OH240	Burkettsville Village, Ohio	0.0000203512%
OH241	Burlington Township, Ohio	0.0012973736%
OH242	Burton Township, Ohio	0.0022682986%
OH243	Burton Village, Ohio	0.0036177927%
OH244	Butler County, Ohio	2.6887406714%
OH245	Butler Township, Columbiana County, Ohio	0.0017704304%
OH246	Butler Township, Darke County, Ohio	0.0006643202%
OH247	Butler Township, Mercer County, Ohio	0.0021025197%
OH248	Butler Township, Montgomery County, Ohio	0.0308007959%
OH249	Butler Township, Richland County, Ohio	0.0003925059%
OH250	Butler Village, Ohio	0.0004817118%
OH251	Butlerville Village, Ohio	0.0001866800%
OH252	Byesville Village, Ohio	0.0018493145%
OH253	Byrd Township, Ohio	0.0018293707%
OH254	Cadiz Township, Ohio	0.0013359320%
OH255	Cadiz Village, Ohio	0.0042081859%
OH256	Caesarscreek Township, Ohio	0.0004643421%
OH257	Cairo Village, Ohio	0.0000409075%
OH258	Caldwell Village, Ohio	0.0017937650%
OH259	Caledonia Village, Ohio	0.0007098142%
OH260	Cambridge City, Ohio	0.0668200845%
OH261	Cambridge Township, Ohio	0.0000951853%
OH262	Camden Township, Ohio	0.0003116539%
OH263	Camden Village, Ohio	0.0031099397%
OH264	Camp Creek Township, Ohio	0.0001943597%
OH265	Campbell City, Ohio	0.0206854359%
OH266	Canaan Township, Morrow County, Ohio	0.0000885618%
OH267	Canaan Township, Wayne County, Ohio	0.0002435589%
OH268	Canal Fulton City, Ohio	0.0143391696%
OH269	Canal Winchester City, Ohio	0.0017001990%
OH270	Canfield City, Ohio	0.0340253310%
OH271	Canfield Township, Ohio	0.0024198521%
OH272	Canton City, Ohio	0.4906093929%
OH273	Canton Township, Ohio	0.0238293446%
OH274	Cardington Village, Ohio	0.0026450469%
OH275	Carey Village, Ohio	0.0048237347%

State ID	Qualifying Subdivision	Consolidated State Allocation
OH276	Carlisle Township, Ohio	0.0046455904%
OH277	Carlisle Village, Ohio	0.0081658806%
OH278	Carroll County, Ohio	0.1274960868%
OH279	Carroll Township, Ohio	0.0031394902%
OH280	Carroll Village, Ohio	0.0008718207%
OH281	Carrollton Village, Ohio	0.0061329714%
OH282	Carryall Township, Ohio	0.0000511646%
OH283	Carthage Township, Ohio	0.0002397033%
OH284	Cass Township, Muskingum County, Ohio	0.0002006185%
OH285	Cass Township, Richland County, Ohio	0.0007850118%
OH286	Casstown Village, Ohio	0.0005337723%
OH287	Castalia Village, Ohio	0.0011427974%
OH288	Castine Village, Ohio	0.0005289957%
OH289	Catawba Island Township, Ohio	0.0060247984%
OH290	Catawba Village, Ohio	0.0002313575%
OH291	Cecil Village, Ohio	0.0000109638%
OH292	Cedarville Township, Ohio	0.0036837809%
OH293	Cedarville Village, Ohio	0.0036321873%
OH294	Celina City, Ohio	0.0165674940%
OH295	Center Township, Carroll County, Ohio	0.0001634007%
OH296	Center Township, Columbiana County, Ohio	0.0003327877%
OH297	Center Township, Guernsey County, Ohio	0.0001903706%
OH298	Center Township, Mercer County, Ohio	0.0004241134%
OH299	Center Township, Monroe County, Ohio	0.0005361288%
OH300	Center Township, Morgan County, Ohio	0.0000535537%
OH301	Center Township, Noble County, Ohio	0.0001724774%
OH302	Center Township, Williams County, Ohio	0.0005107662%
OH303	Center Township, Wood County, Ohio	0.0002510158%
OH304	Centerburg Village, Ohio	0.0041342364%
OH305	Centerville City, Ohio	0.0591550598%
OH306	Centerville Village, Ohio	0.0005060807%
OH307	Cessna Township, Ohio	0.0001110677%
OH308	Chagrin Falls Township, Ohio	0.0000039510%
OH309	Chagrin Falls Village, Ohio	0.0125168784%
OH310	Champaign County, Ohio	0.2269483026%
OH311	Champion Township, Ohio	0.0283714840%
OH312	Chardon City, Ohio	0.0479405386%
OH313	Chardon Township, Ohio	0.0039336317%

State ID	Qualifying Subdivision	Consolidated State Allocation
OH314	Charlestown Township, Ohio	0.0000121872%
OH315	Chatfield Township, Ohio	0.0008265878%
OH316	Chatfield Village, Ohio	0.0000870092%
OH317	Chatham Township, Ohio	0.0003778818%
OH318	Chauncey Village, Ohio	0.0000833751%
OH319	Cherry Fork Village, Ohio	0.0004264208%
OH320	Cherry Valley Township, Ohio	0.0004696334%
OH321	Chesapeake Village, Ohio	0.0021905725%
OH322	Cheshire Township, Ohio	0.0010496489%
OH323	Cheshire Village, Ohio	0.0001686936%
OH324	Chester Township, Clinton County, Ohio	0.0019181224%
OH325	Chester Township, Geauga County, Ohio	0.0252766944%
OH326	Chester Township, Morrow County, Ohio	0.0005136587%
OH327	Chester Township, Wayne County, Ohio	0.0004213956%
OH328	Chesterhill Village, Ohio	0.0000958805%
OH329	Chesterville Village, Ohio	0.0000531371%
OH330	Cheviot City, Ohio	0.0177109500%
OH331	Chickasaw Village, Ohio	0.0003251707%
OH332	Chillicothe City, Ohio	0.3116747707%
OH333	Chilo Village, Ohio	0.0001537865%
OH334	Chippewa Lake Village, Ohio	0.0005077787%
OH335	Chippewa Township, Ohio	0.0025863636%
OH336	Christiansburg Village, Ohio	0.0002537744%
OH337	Cincinnati City, Ohio	1.9225774768%
OH338	Circleville City, Ohio	0.3452050773%
OH339	Circleville Township, Ohio	0.0006412839%
OH340	Claibourne Township, Ohio	0.0000211028%
OH341	Claridon Township, Ohio	0.0025745668%
OH342	Clarington Village, Ohio	0.0000498724%
OH343	Clark County, Ohio	1.2151983585%
OH344	Clark Township, Brown County, Ohio	0.0053640868%
OH345	Clark Township, Clinton County, Ohio	0.0010928837%
OH346	Clarksburg Village, Ohio	0.0000295119%
OH347	Clarksfield Township, Ohio	0.0007412517%
OH348	Clarksville Village, Ohio	0.0004237712%
OH349	Clay Center Village, Ohio	0.0000618280%
OH350	Clay Township, Auglaize County, Ohio	0.0004451307%
OH351	Clay Township, Highland County, Ohio	0.0003613635%
OH352	Clay Township, Montgomery County, Ohio	0.0058148642%

State ID	Qualifying Subdivision	Consolidated State Allocation
OH353	Clay Township, Muskingum County, Ohio	0.0004012369%
OH354	Clay Township, Ottawa County, Ohio	0.0026311263%
OH355	Clay Township, Scioto County, Ohio	0.0064826249%
OH356	Clay Township, Tuscarawas County, Ohio	0.0000492680%
OH357	Clayton City, Ohio	0.0375148659%
OH358	Clayton Township, Ohio	0.0004303120%
OH359	Clear Creek Township, Ohio	0.0874295648%
OH360	Clearcreek Township, Ohio	0.0010918129%
OH361	Clermont County, Ohio	1.9148422650%
OH362	Cleveland City, Ohio	1.8006406770%
OH363	Cleveland Heights City, Ohio	0.0861404621%
OH364	Cleves Village, Ohio	0.0031981583%
OH365	Clifton Village, Ohio	0.0002996729%
OH366	Clinton County, Ohio	0.4003299792%
OH367	Clinton Township, Franklin County, Ohio	0.0107832149%
OH368	Clinton Township, Fulton County, Ohio	0.0006481787%
OH369	Clinton Township, Seneca County, Ohio	0.0007420064%
OH370	Clinton Township, Shelby County, Ohio	0.0005501831%
OH371	Clinton Township, Vinton County, Ohio	0.0002860993%
OH372	Clinton Township, Wayne County, Ohio	0.0001933007%
OH373	Clinton Village, Ohio	0.0011373034%
OH374	Cloverdale Village, Ohio	0.0001986809%
OH375	Clyde City, Ohio	0.0219912947%
OH376	Coal Grove Village, Ohio	0.0050070228%
OH377	Coal Township, Jackson County, Ohio	0.0004972699%
OH378	Coal Township, Perry County, Ohio	0.0003550074%
OH379	Coalton Village, Ohio	0.0024310971%
OH380	Coitsville Township, Ohio	0.0048028536%
OH381	Coldwater Village, Ohio	0.0054593322%
OH382	Colerain Township, Belmont County, Ohio	0.0006046108%
OH383	Colerain Township, Hamilton County, Ohio	0.1398087860%
OH384	College Corner Village, Ohio	0.0022611881%
OH385	College Township, Ohio	0.0028608916%
OH386	Columbia Township, Hamilton County, Ohio	0.0091268592%

State ID	Qualifying Subdivision	Consolidated State Allocation
OH387	Columbia Township, Lorain County, Ohio	0.0044508068%
OH388	Columbia Township, Meigs County, Ohio	0.0000676625%
OH389	Columbiana City, Ohio	0.0212455929%
OH390	Columbiana County, Ohio	0.6832396894%
OH391	Columbus City, Ohio	4.0358741733%
OH392	Columbus Grove Village, Ohio	0.0013907661%
OH393	Commercial Point Village, Ohio	0.0008841945%
OH394	Concord Township, Delaware County, Ohio	0.0132064120%
OH395	Concord Township, Fayette County, Ohio	0.0003201811%
OH396	Concord Township, Highland County, Ohio	0.0000677557%
OH397	Concord Township, Lake County, Ohio	0.0329119594%
OH398	Concord Township, Miami County, Ohio	0.0048266640%
OH399	Concord Township, Ross County, Ohio	0.0034233759%
OH400	Conesville Village, Ohio	0.0001949904%
OH401	Congress Township, Morrow County, Ohio	0.0000354247%
OH402	Congress Township, Wayne County, Ohio	0.0000386601%
OH403	Congress Village, Ohio	0.0001394121%
OH404	Conneaut City, Ohio	0.0500864015%
OH405	Continental Village, Ohio	0.0013742094%
OH406	Convoy Village, Ohio	0.0015735393%
OH407	Coolville Village, Ohio	0.0002918128%
OH408	Copley Township, Ohio	0.0644889601%
OH409	Corning Village, Ohio	0.0010865378%
OH410	Cortland City, Ohio	0.0349699000%
OH411	Corwin Village, Ohio	0.0004993129%
OH412	Coshocton City, Ohio	0.0177337984%
OH413	Coshocton County, Ohio	0.1889793769%
OH414	Coventry Township, Ohio	0.0112670146%
OH415	Covington Village, Ohio	0.0077226624%
OH416	Craig Beach Village, Ohio	0.0004176394%
OH417	Cranberry Township, Ohio	0.0001631423%
OH418	Crane Township, Paulding County, Ohio	0.0001169477%
OH419	Crane Township, Wyandot County, Ohio	0.0005667045%
OH420	Crawford County, Ohio	0.2595376809%
OH421	Crawford Township, Coshocton County, Ohio	0.0002372670%

State ID	Qualifying Subdivision	Consolidated State Allocation
OH422	Crawford Township, Wyandot County, Ohio	0.0001079437%
OH423	Crestline Village, Ohio	0.0166501207%
OH424	Creston Village, Ohio	0.0007596505%
OH425	Cridersville Village, Ohio	0.0045581388%
OH426	Crooksville Village, Ohio	0.0043353934%
OH427	Crosby Township, Ohio	0.0044757516%
OH428	Cross Creek Township, Ohio	0.0061202713%
OH429	Crown City Village, Ohio	0.0005435682%
OH430	Cumberland Village, Ohio	0.0007050617%
OH431	Custar Village, Ohio	0.0000244893%
OH432	Cuyahoga Falls City, Ohio	0.1811685822%
OH433	Cuyahoga Heights Village, Ohio	0.0193798260%
OH434	Cygnet Village, Ohio	0.0002510158%
OH435	Cynthian Township, Ohio	0.0000266218%
OH436	Dallas Township, Ohio	0.0001522662%
OH437	Dalton Village, Ohio	0.0011945985%
OH438	Damascus Township, Ohio	0.0007850761%
OH439	Danbury Township, Ohio	0.0038539475%
OH440	Danville Village, Ohio	0.0021828768%
OH441	Darby Township, Madison County, Ohio	0.0011346056%
OH442	Darby Township, Union County, Ohio	0.0004220559%
OH443	Darbyville Village, Ohio	0.0000242911%
OH444	Darke County, Ohio	0.2651621760%
OH445	Dayton City, Ohio	1.3353086202%
OH446	De Graff Village, Ohio	0.0013067754%
OH447	Decatur Township, Lawrence County, Ohio	0.0001043130%
OH448	Decatur Township, Washington County, Ohio	0.0001169753%
OH449	Deer Park City, Ohio	0.0107468140%
OH450	Deercreek Township, Ohio	0.0004275226%
OH451	Deerfield Township, Portage County, Ohio	0.0008693556%
OH452	Deerfield Township, Ross County, Ohio	0.0015346168%
OH453	Deerfield Township, Warren County, Ohio	0.1151454582%
OH454	Deersville Village, Ohio	0.0000209231%
OH455	Defiance City, Ohio	0.0658767007%
OH456	Defiance County, Ohio	0.1709704524%
OH457	Defiance Township, Ohio	0.0007172505%
OH458	Delaware City, Ohio	0.1151374756%
OH459	Delaware County, Ohio	0.4816174702%
OH460	Delaware Township, Defiance County, Ohio	0.0015007088%

State ID	Qualifying Subdivision	Consolidated State Allocation
OH461	Delaware Township, Delaware County, Ohio	0.0075064553%
OH462	Delaware Township, Hancock County, Ohio	0.0001335254%
OH463	Delhi Township, Ohio	0.0630446356%
OH464	Dellroy Village, Ohio	0.0002505477%
OH465	Delphos City, Ohio	0.0171051813%
OH466	Delta Village, Ohio	0.0085241620%
OH467	Dennison Village, Ohio	0.0062570335%
OH468	Deshler Village, Ohio	0.0009475056%
OH469	Dexter City Village, Ohio	0.0000689910%
OH470	Dillonvale Village, Ohio	0.0012431801%
OH471	Dinsmore Township, Ohio	0.0004170743%
OH472	Dodson Township, Ohio	0.0105924667%
OH473	Donnelsville Village, Ohio	0.0002721853%
OH474	Dorset Township, Ohio	0.0001174083%
OH475	Dover City, Ohio	0.0416708574%
OH476	Dover Township, Athens County, Ohio	0.0005002505%
OH477	Dover Township, Tuscarawas County, Ohio	0.0000886824%
OH478	Dover Township, Union County, Ohio	0.0005124965%
OH479	Doylestown Village, Ohio	0.0020721837%
OH480	Dresden Village, Ohio	0.0028086586%
OH481	Dublin City, Ohio	0.0949912950%
OH482	Dublin Township, Ohio	0.0004331371%
OH483	Duchouquet Township, Ohio	0.0010861190%
OH484	Dunham Township, Ohio	0.0004344797%
OH485	Dunkirk Village, Ohio	0.0005233559%
OH486	Dupont Village, Ohio	0.0006622696%
OH487	Eagle Township, Brown County, Ohio	0.0090538344%
OH488	Eagle Township, Vinton County, Ohio	0.0002210767%
OH489	East Canton Village, Ohio	0.0024838727%
OH490	East Cleveland City, Ohio	0.0558083674%
OH491	East Liverpool City, Ohio	0.0368861843%
OH492	East Palestine Village, Ohio	0.0165861370%
OH493	East Sparta Village, Ohio	0.0004354199%
OH494	East Union Township, Ohio	0.0003556733%
OH495	Eastlake City, Ohio	0.0700788770%
OH496	Eaton City, Ohio	0.0615604375%
OH497	Eaton Township, Ohio	0.0004480024%
OH498	Eden Township, Licking County, Ohio	0.0004448138%
OH499	Eden Township, Seneca County, Ohio	0.0001102982%

State ID	Qualifying Subdivision	Consolidated State Allocation
OH500	Eden Township, Wyandot County, Ohio	0.0000944507%
OH501	Edgerton Village, Ohio	0.0042354308%
OH502	Edinburg Township, Ohio	0.0011740363%
OH503	Edison Village, Ohio	0.0001948360%
OH504	Edon Village, Ohio	0.0013908558%
OH505	Eldorado Village, Ohio	0.0003273621%
OH506	Elgin Village, Ohio	0.0000619504%
OH507	Elida Village, Ohio	0.0011181382%
OH508	Elizabeth Township, Lawrence County, Ohio	0.0009562023%
OH509	Elizabeth Township, Miami County, Ohio	0.0000454274%
OH510	Elk Township, Noble County, Ohio	0.0000344955%
OH511	Elk Township, Vinton County, Ohio	0.0002600903%
OH512	Elkrun Township, Ohio	0.0004259682%
OH513	Ellsworth Township, Ohio	0.0001965362%
OH514	Elmore Village, Ohio	0.0016556174%
OH515	Elmwood Place Village, Ohio	0.0045008025%
OH516	Elyria City, Ohio	0.2638149975%
OH517	Elyria Township, Ohio	0.0007693955%
OH518	Empire Village, Ohio	0.0010041070%
OH519	Englewood City, Ohio	0.0628005329%
OH520	Enon Village, Ohio	0.0038378123%
OH521	Erie County, Ohio	0.4532438208%
OH522	Erie Township, Ohio	0.0006045408%
OH523	Euclid City, Ohio	0.0936790366%
OH524	Evendale Village, Ohio	0.0340357530%
OH525	Fairborn City, Ohio	0.1544298717%
OH526	Fairfax Village, Ohio	0.0079411190%
OH527	Fairfield City, Ohio	0.2893759753%
OH528	Fairfield County, Ohio	0.6244843622%
OH529	Fairfield Township, Butler County, Ohio	0.0801075425%
OH530	Fairfield Township, Columbiana County, Ohio	0.0024759402%
OH531	Fairfield Township, Huron County, Ohio	0.0006726173%
OH532	Fairfield Township, Tuscarawas County, Ohio	0.0004138510%
OH533	Fairfield Township, Washington County, Ohio	0.0000501323%
OH534	Fairlawn City, Ohio	0.0675346202%
OH535	Fairport Harbor Village, Ohio	0.0091069372%
OH536	Fairview Park City, Ohio	0.0218966352%
OH537	Fairview Village, Ohio	0.0000924858%

State ID	Qualifying Subdivision	Consolidated State Allocation
OH538	Falls Township, Hocking County, Ohio	0.0002873384%
OH539	Falls Township, Muskingum County, Ohio	0.0022068032%
OH540	Farmer Township, Ohio	0.0002869002%
OH541	Farmersville Village, Ohio	0.0013667928%
OH542	Farmington Township, Ohio	0.0015345154%
OH543	Fayette County, Ohio	0.2554820842%
OH544	Fayette Township, Ohio	0.0013386832%
OH545	Fayette Village, Ohio	0.0012352086%
OH546	Fayetteville Village, Ohio	0.0029455968%
OH547	Fearing Township, Ohio	0.0004177690%
OH548	Felicity Village, Ohio	0.0030684641%
OH549	Findlay City, Ohio	0.1162163280%
OH550	Fitchville Township, Ohio	0.0003431721%
OH551	Flatrock Township, Ohio	0.0001691974%
OH552	Fletcher Village, Ohio	0.0012151836%
OH553	Florence Township, Erie County, Ohio	0.0013194115%
OH554	Florence Township, Williams County, Ohio	0.0002671700%
OH555	Florida Village, Ohio	0.0015566164%
OH556	Flushing Township, Ohio	0.0005905501%
OH557	Flushing Village, Ohio	0.0004640036%
OH558	Forest Park City, Ohio	0.0861415180%
OH559	Forest Village, Ohio	0.0023324226%
OH560	Fort Jennings Village, Ohio	0.0004221969%
OH561	Fort Loramie Village, Ohio	0.0012778446%
OH562	Fort Recovery Village, Ohio	0.0009926059%
OH563	Fostoria City, Ohio	0.0512205361%
OH564	Fowler Township, Ohio	0.0047569976%
OH565	Frankfort Village, Ohio	0.0079678326%
OH566	Franklin City, Ohio	0.0535002847%
OH567	Franklin County, Ohio	5.7883029997%
OH568	Franklin Township, Adams County, Ohio	0.0010014012%
OH569	Franklin Township, Brown County, Ohio	0.0023874837%
OH570	Franklin Township, Clermont County, Ohio	0.0034132353%
OH571	Franklin Township, Columbiana County, Ohio	0.0006123293%
OH572	Franklin Township, Coshocton County, Ohio	0.0002449208%
OH573	Franklin Township, Darke County, Ohio	0.0004797868%
OH574	Franklin Township, Franklin County, Ohio	0.0440874644%

State ID	Qualifying Subdivision	Consolidated State Allocation
OH575	Franklin Township, Fulton County, Ohio	0.0000733787%
OH576	Franklin Township, Jackson County, Ohio	0.0003038871%
OH577	Franklin Township, Mercer County, Ohio	0.0012091744%
OH578	Franklin Township, Portage County, Ohio	0.0001990581%
OH579	Franklin Township, Richland County, Ohio	0.0008563765%
OH580	Franklin Township, Shelby County, Ohio	0.0011802315%
OH581	Franklin Township, Tuscarawas County, Ohio	0.0031235899%
OH582	Franklin Township, Warren County, Ohio	0.0035372089%
OH583	Frazeysburg Village, Ohio	0.0003209896%
OH584	Fredericksburg Village, Ohio	0.0001198464%
OH585	Fredericktown Village, Ohio	0.0055729507%
OH586	Freedom Township, Portage County, Ohio	0.0004265530%
OH587	Freedom Township, Wood County, Ohio	0.0012305895%
OH588	Freeport Township, Ohio	0.0002576440%
OH589	Freeport Village, Ohio	0.0001049661%
OH590	Fremont City, Ohio	0.0724844646%
OH591	Fulton County, Ohio	0.1830065436%
OH592	Fulton Village, Ohio	0.0001234266%
OH593	Fultonham Village, Ohio	0.0000100309%
OH594	Gahanna City, Ohio	0.0724048588%
OH595	Galena Village, Ohio	0.0001402305%
OH596	Galion City, Ohio	0.0440049221%
OH597	Gallia County, Ohio	0.3272280412%
OH598	Gallipolis Village, Ohio	0.0421733929%
OH599	Gambier Village, Ohio	0.0019348227%
OH600	Gann Village, Ohio	0.0000330739%
OH601	Garfield Heights City, Ohio	0.0512449222%
OH602	Garrettsville Village, Ohio	0.0040959299%
OH603	Gasper Township, Ohio	0.0060234621%
OH604	Gates Mills Village, Ohio	0.0065784730%
OH605	Geauga County, Ohio	0.4034987358%
OH606	Geneva City, Ohio	0.0306905423%
OH607	Geneva Township, Ohio	0.0015497902%
OH608	Geneva-On-The-Lake Village, Ohio	0.0052011898%
OH609	Genoa Township, Ohio	0.0490971668%
OH610	Genoa Village, Ohio	0.0023769444%
OH611	Georgetown Village, Ohio	0.0263243336%

State ID	Qualifying Subdivision	Consolidated State Allocation
OH612	German Township, Auglaize County, Ohio	0.0003115915%
OH613	German Township, Clark County, Ohio	0.0120986353%
OH614	German Township, Fulton County, Ohio	0.0012718979%
OH615	German Township, Harrison County, Ohio	0.0002671864%
OH616	German Township, Montgomery County, Ohio	0.0069298793%
OH617	Germantown City, Ohio	0.0166173231%
OH618	Gettysburg Village, Ohio	0.0016993673%
OH619	Gibson Township, Ohio	0.0000992606%
OH620	Gibsonburg Village, Ohio	0.0033999699%
OH621	Gilboa Village, Ohio	0.0001572890%
OH622	Gilead Township, Ohio	0.0002952061%
OH623	Girard City, Ohio	0.0699056997%
OH624	Glandorf Village, Ohio	0.0007698884%
OH625	Glendale Village, Ohio	0.0089682038%
OH626	Glenford Village, Ohio	0.0004004647%
OH627	Glenmont Village, Ohio	0.0000756142%
OH628	Glenwillow Village, Ohio	0.0043105790%
OH629	Gloria Glens Park Village, Ohio	0.0002361762%
OH630	Glouster Village, Ohio	0.0025846274%
OH631	Gnadenhutten Village, Ohio	0.0020889623%
OH632	Golf Manor Village, Ohio	0.0149804075%
OH633	Good Hope Township, Ohio	0.0000544952%
OH634	Gordon Village, Ohio	0.0000369067%
OH635	Gorham Township, Ohio	0.0003913532%
OH636	Goshen Township, Auglaize County, Ohio	0.0000178052%
OH637	Goshen Township, Belmont County, Ohio	0.0007592787%
OH638	Goshen Township, Champaign County, Ohio	0.0009305060%
OH639	Goshen Township, Clermont County, Ohio	0.0551461609%
OH640	Goshen Township, Hardin County, Ohio	0.0002665626%
OH641	Goshen Township, Mahoning County, Ohio	0.0098390939%
OH642	Goshen Township, Tuscarawas County, Ohio	0.0000492680%
OH643	Grafton Township, Ohio	0.0022594905%
OH644	Grafton Village, Ohio	0.0066908189%
OH645	Grand Prairie Township, Ohio	0.0006880499%
OH646	Grand Rapids Township, Ohio	0.0003306061%
OH647	Grand Rapids Village, Ohio	0.0005020315%
OH648	Grand River Village, Ohio	0.0044444886%

State ID	Qualifying Subdivision	Consolidated State Allocation
OH649	Grand Township, Ohio	0.0000371919%
OH650	Grandview Heights City, Ohio	0.0363742583%
OH651	Grandview Township, Ohio	0.0005932320%
OH652	Granger Township, Ohio	0.0028459226%
OH653	Granville Township, Licking County, Ohio	0.0126030583%
OH654	Granville Township, Mercer County, Ohio	0.0015971931%
OH655	Granville Village, Ohio	0.0103882561%
OH656	Gratiot Village, Ohio	0.0002067581%
OH657	Gratis Village, Ohio	0.0064162966%
OH658	Graysville Village, Ohio	0.0000309746%
OH659	Green Camp Township, Ohio	0.0011901403%
OH660	Green Camp Village, Ohio	0.0002045554%
OH661	Green City, Ohio	0.0847580205%
OH662	Green Creek Township, Ohio	0.0006872280%
OH663	Green Springs Village, Ohio	0.0016423298%
OH664	Green Township, Adams County, Ohio	0.0000263527%
OH665	Green Township, Brown County, Ohio	0.0034727036%
OH666	Green Township, Clark County, Ohio	0.0007485095%
OH667	Green Township, Clinton County, Ohio	0.0001561262%
OH668	Green Township, Fayette County, Ohio	0.0001235787%
OH669	Green Township, Gallia County, Ohio	0.0009184428%
OH670	Green Township, Hamilton County, Ohio	0.0953852812%
OH671	Green Township, Harrison County, Ohio	0.0005725423%
OH672	Green Township, Hocking County, Ohio	0.0033142996%
OH673	Green Township, Mahoning County, Ohio	0.0033902496%
OH674	Green Township, Monroe County, Ohio	0.0000062341%
OH675	Green Township, Ross County, Ohio	0.0105357346%
OH676	Green Township, Scioto County, Ohio	0.0218077775%
OH677	Green Township, Shelby County, Ohio	0.0000621174%
OH678	Greene County, Ohio	0.9063855073%
OH679	Greene Township, Ohio	0.0000341003%
OH680	Greenfield Township, Fairfield County, Ohio	0.0084982150%

State ID	Qualifying Subdivision	Consolidated State Allocation
OH681	Greenfield Township, Huron County, Ohio	0.0011256045%
OH682	Greenfield Village, Ohio	0.0148836578%
OH683	Greenhills Village, Ohio	0.0082250286%
OH684	Greensburg Township, Ohio	0.0001324539%
OH685	Greenville City, Ohio	0.0550893674%
OH686	Greenville Township, Ohio	0.0140737464%
OH687	Greenwich Village, Ohio	0.0017844949%
OH688	Groton Township, Ohio	0.0005921768%
OH689	Grove City, Ohio	0.0733060057%
OH690	Groveport City, Ohio	0.0125549613%
OH691	Grover Hill Village, Ohio	0.0001863854%
OH692	Guernsey County, Ohio	0.2910222727%
OH693	Guilford Township, Ohio	0.0060579183%
OH694	Gustavus Township, Ohio	0.0000511505%
OH695	Guyan Township, Ohio	0.0003561309%
OH696	Hambden Township, Ohio	0.0039432026%
OH697	Hamden Village, Ohio	0.0009493296%
OH698	Hamer Township, Ohio	0.0000451704%
OH699	Hamersville Village, Ohio	0.0007131445%
OH700	Hamilton City, Ohio	0.6764224012%
OH701	Hamilton County, Ohio	5.8561869769%
OH702	Hamilton Township, Franklin County, Ohio	0.0255910434%
OH703	Hamilton Township, Jackson County, Ohio	0.0005248960%
OH704	Hamilton Township, Lawrence County, Ohio	0.0009909733%
OH705	Hamilton Township, Warren County, Ohio	0.0450761424%
OH706	Hamler Village, Ohio	0.0004060738%
OH707	Hancock County, Ohio	0.2855617267%
OH708	Hanging Rock Village, Ohio	0.0019993320%
OH709	Hanover Township, Butler County, Ohio	0.0098235954%
OH710	Hanover Township, Columbiana County, Ohio	0.0013178391%
OH711	Hanover Township, Licking County, Ohio	0.0043184009%
OH712	Hanover Village, Ohio	0.0008062251%
OH713	Hanoverton Village, Ohio	0.0010440744%
OH714	Harbor View Village, Ohio	0.0001526700%
OH715	Hardin County, Ohio	0.2235793641%
OH716	Harding Township, Ohio	0.0000272955%
OH717	Hardy Township, Ohio	0.0013901375%
OH718	Harlan Township, Ohio	0.0030485156%
OH719	Harlem Township, Ohio	0.0049245646%
OH720	Harmony Township, Clark County, Ohio	0.0018916876%

State ID	Qualifying Subdivision	Consolidated State Allocation
OH721	Harmony Township, Morrow County, Ohio	0.0001180824%
OH722	Harpersfield Township, Ohio	0.0005048559%
OH723	Harpster Village, Ohio	0.0000822938%
OH724	Harris Township, Ohio	0.0004190567%
OH725	Harrisburg Village, Ohio	0.0002978367%
OH726	Harrison City, Ohio	0.0560804997%
OH727	Harrison County, Ohio	0.0770641930%
OH728	Harrison Township, Champaign County, Ohio	0.0001374611%
OH729	Harrison Township, Gallia County, Ohio	0.0002811560%
OH730	Harrison Township, Hamilton County, Ohio	0.0022712769%
OH731	Harrison Township, Henry County, Ohio	0.0000203037%
OH732	Harrison Township, Knox County, Ohio	0.0000165369%
OH733	Harrison Township, Licking County, Ohio	0.0003058095%
OH734	Harrison Township, Vinton County, Ohio	0.0000199508%
OH735	Harrison Township, Montgomery County, Ohio	0.0328749640%
OH736	Harrison Township, Muskingum County, Ohio	0.0004112679%
OH737	Harrison Township, Paulding County, Ohio	0.0000657831%
OH738	Harrison Township, Perry County, Ohio	0.0020762554%
OH739	Harrison Township, Pickaway County, Ohio	0.0068306454%
OH740	Harrison Township, Preble County, Ohio	0.0015877060%
OH741	Harrison Township, Scioto County, Ohio	0.0071650064%
OH742	Harrison Township, Van Wert County, Ohio	0.0001858511%
OH743	Harrison Township, Vinton County, Ohio	0.0005201806%
OH744	Harrisville Township, Ohio	0.0067192115%
OH745	Harrisville Village, Ohio	0.0000619645%
OH746	Harrod Village, Ohio	0.0000673593%
OH747	Harrison Township, Vinton County, Ohio	0.0007413564%
OH748	Hartford Township, Trumbull County, Ohio	0.0014833648%
OH749	Hartford Village, Ohio	0.0002502078%
OH750	Hartland Township, Ohio	0.0000960882%

State ID	Qualifying Subdivision	Consolidated State Allocation
OH751	Hartsgrove Township, Ohio	0.0005870417%
OH752	Hartville Village, Ohio	0.0099058031%
OH753	Harveysburg Village, Ohio	0.0012100978%
OH754	Haskins Village, Ohio	0.0008938610%
OH755	Haviland Village, Ohio	0.0000511646%
OH756	Hayesville Village, Ohio	0.0000894727%
OH757	Heath City, Ohio	0.0429986695%
OH758	Hebron Village, Ohio	0.0150402674%
OH759	Helena Village, Ohio	0.0000542548%
OH760	Hemlock Village, Ohio	0.0003549573%
OH761	Henrietta Township, Ohio	0.0004674808%
OH762	Henry County, Ohio	0.1089766836%
OH763	Hicksville Township, Ohio	0.0002096578%
OH764	Hicksville Village, Ohio	0.0077242363%
OH765	Higginsport Village, Ohio	0.0015866304%
OH766	Highland County, Ohio	0.3882850462%
OH767	Highland Heights City, Ohio	0.0224853394%
OH768	Highland Hills Village, Ohio	0.0015764629%
OH769	Highland Township, Defiance County, Ohio	0.0027365866%
OH770	Highland Township, Muskingum County, Ohio	0.0001705257%
OH771	Highland Village, Ohio	0.0000677557%
OH772	Hilliard City, Ohio	0.0500136505%
OH773	Hills and Dales Village, Ohio	0.0006069453%
OH774	Hillsboro City, Ohio	0.0707143136%
OH775	Hinckley Township, Ohio	0.0165323306%
OH776	Hiram Township, Ohio	0.0008287315%
OH777	Hiram Village, Ohio	0.0032539898%
OH778	Hocking County, Ohio	0.2559590488%
OH779	Holgate Village, Ohio	0.0002774838%
OH780	Holiday City Village, Ohio	0.0000613051%
OH781	Holland Village, Ohio	0.0097536077%
OH782	Hollansburg Village, Ohio	0.0003567645%
OH783	Holloway Village, Ohio	0.0002671536%
OH784	Holmes County, Ohio	0.1337033098%
OH785	Holmes Township, Ohio	0.0003480370%
OH786	Holmesville Village, Ohio	0.0000436236%
OH787	Homer Township, Medina County, Ohio	0.0010864103%
OH788	Homer Township, Morgan County, Ohio	0.0001820827%
OH789	Hopedale Village, Ohio	0.0002767288%
OH790	Hopewell Township, Licking County, Ohio	0.0002502078%
OH791	Hopewell Township, Muskingum County, Ohio	0.0007422883%
OH792	Hopewell Township, Perry County, Ohio	0.0012909360%

State ID	Qualifying Subdivision	Consolidated State Allocation
OH793	Hopewell Township, Seneca County, Ohio	0.0001303525%
OH794	Howard Township, Ohio	0.0000496108%
OH795	Howland Township, Ohio	0.0502639031%
OH796	Hoytville Village, Ohio	0.0002378935%
OH797	Hubbard City, Ohio	0.0289341396%
OH798	Hubbard Township, Ohio	0.0153110532%
OH799	Huber Heights City, Ohio	0.1252489167%
OH800	Hudson City, Ohio	0.0660214283%
OH801	Hunting Valley Village, Ohio	0.0076690112%
OH802	Huntington Township, Brown County, Ohio	0.0072244638%
OH803	Huntington Township, Ross County, Ohio	0.0066106570%
OH804	Huntsburg Township, Ohio	0.0006508198%
OH805	Huntsville Village, Ohio	0.0008479077%
OH806	Huron City, Ohio	0.0302737409%
OH807	Huron County, Ohio	0.3638859630%
OH808	Huron Township, Ohio	0.0007791800%
OH809	Independence City, Ohio	0.0311578609%
OH810	Independence Township, Ohio	0.0000751984%
OH811	Irondale Village, Ohio	0.0001593821%
OH812	Ironton City, Ohio	0.0888572696%
OH813	Island Creek Township, Ohio	0.0026616805%
OH814	Israel Township, Ohio	0.0004746750%
OH815	Ithaca Village, Ohio	0.0003813690%
OH816	Jackson Center Village, Ohio	0.0015263144%
OH817	Jackson City, Ohio	0.0556665988%
OH818	Jackson County, Ohio	0.4838159524%
OH819	Jackson Township, Allen County, Ohio	0.0004227108%
OH820	Jackson Township, Ashland County, Ohio	0.0000162678%
OH821	Jackson Township, Auglaize County, Ohio	0.0003115915%
OH822	Jackson Township, Brown County, Ohio	0.0004961005%
OH823	Jackson Township, Clermont County, Ohio	0.0014652778%
OH824	Jackson Township, Coshocton County, Ohio	0.0005510719%
OH825	Jackson Township, Crawford County, Ohio	0.0000108762%
OH826	Jackson Township, Franklin County, Ohio	0.0661350150%
OH827	Jackson Township, Guernsey County, Ohio	0.0010334405%
OH828	Jackson Township, Hardin County, Ohio	0.0015327348%

State ID	Qualifying Subdivision	Consolidated State Allocation
OH829	Jackson Township, Highland County, Ohio	0.0000451704%
OH830	Jackson Township, Jackson County, Ohio	0.0001105044%
OH831	Jackson Township, Mahoning County, Ohio	0.0058960862%
OH832	Jackson Township, Monroe County, Ohio	0.0000561065%
OH833	Jackson Township, Montgomery County, Ohio	0.0086323757%
OH834	Jackson Township, Muskingum County, Ohio	0.0011435253%
OH835	Jackson Township, Noble County, Ohio	0.0001207342%
OH836	Jackson Township, Monroe County, Ohio	0.0001534939%
OH837	Jackson Township, Pickaway County, Ohio	0.0001894702%
OH838	Jackson Township, Pike County, Ohio	0.0004309715%
OH839	Jackson Township, Richland County, Ohio	0.0004638706%
OH840	Jackson Township, Sandusky County, Ohio	0.0004340387%
OH841	Jackson Township, Seneca County, Ohio	0.0004311659%
OH842	Jackson Township, Shelby County, Ohio	0.0013665838%
OH843	Jackson Township, Stark County, Ohio	0.1371869620%
OH844	Jackson Township, Union County, Ohio	0.0001416902%
OH845	Jackson Township, Vinton County, Ohio	0.0000910316%
OH846	Jackson Township, Wood County, Ohio	0.0001346914%
OH847	Jackson Township, Wyandot County, Ohio	0.0001214367%
OH848	Jacksonburg Village, Ohio	0.0002870780%
OH849	Jacksonville Village, Ohio	0.0008441727%
OH850	Jamestown Village, Ohio	0.0034877253%
OH851	Jefferson County, Ohio	0.6622324840%
OH852	Jefferson Township, Adams County, Ohio	0.0007642272%
OH853	Jefferson Township, Brown County, Ohio	0.0006821382%
OH854	Jefferson Township, Clinton County, Ohio	0.0014720474%

State ID	Qualifying Subdivision	Consolidated State Allocation
OH855	Jefferson Township, Coshocton County, Ohio	0.0000612302%
OH856	Jefferson Township, Crawford County, Ohio	0.0004567985%
OH857	Jefferson Township, Fayette County, Ohio	0.0005898074%
OH858	Jefferson Township, Franklin County, Ohio	0.0261561693%
OH859	Jefferson Township, Greene County, Ohio	0.0000619123%
OH860	Jefferson Township, Guernsey County, Ohio	0.0000679895%
OH861	Jefferson Township, Jackson County, Ohio	0.0000828783%
OH862	Jefferson Township, Knox County, Ohio	0.0006284039%
OH863	Jefferson Township, Logan County, Ohio	0.0002493846%
OH864	Jefferson Township, Madison County, Ohio	0.0262668976%
OH865	Jefferson Township, Montgomery County, Ohio	0.0133322246%
OH866	Jefferson Township, Muskingum County, Ohio	0.0005015462%
OH867	Jefferson Township, Noble County, Ohio	0.0000172477%
OH868	Jefferson Township, Preble County, Ohio	0.0008020371%
OH869	Jefferson Township, Richland County, Ohio	0.0017662765%
OH870	Jefferson Township, Ross County, Ohio	0.0009148677%
OH871	Jefferson Township, Scioto County, Ohio	0.0036109358%
OH872	Jefferson Township, Tuscarawas County, Ohio	0.0008079949%
OH873	Jefferson Township, Williams County, Ohio	0.0002200224%
OH874	Jefferson Village, Ohio	0.0039566613%
OH875	Jeffersonville Village, Ohio	0.0000112344%
OH876	Jenera Village, Ohio	0.0001194701%
OH877	Jennings Township, Ohio	0.0002731862%
OH878	Jerome Township, Ohio	0.0044044550%
OH879	Jeromesville Village, Ohio	0.0003085668%
OH880	Jerry City Village, Ohio	0.0003417298%
OH881	Jersey Township, Ohio	0.0017699883%
OH882	Jerusalem Township, Ohio	0.0021563480%
OH883	Jerusalem Village, Ohio	0.0000311703%
OH884	Jewett Village, Ohio	0.0001813051%

State ID	Qualifying Subdivision	Consolidated State Allocation
OH885	Johnson Township, Ohio	0.0002326265%
OH886	Johnston Township, Ohio	0.0002216522%
OH887	Johnstown Village, Ohio	0.0092206199%
OH888	Junction City Village, Ohio	0.0017212480%
OH889	Kalida Village, Ohio	0.0022682733%
OH890	Kelleys Island Village, Ohio	0.0028777715%
OH891	Kent City, Ohio	0.0513285414%
OH892	Kenton City, Ohio	0.0306658035%
OH893	Kettering City, Ohio	0.3384195127%
OH894	Kettlersville Village, Ohio	0.0000266218%
OH895	Killbuck Township, Ohio	0.0002093931%
OH896	Killbuck Village, Ohio	0.0010702314%
OH897	Kingston Township, Ohio	0.0000164977%
OH898	Kingston Village, Ohio	0.0076824625%
OH899	Kingsville Township, Ohio	0.0011036385%
OH900	Kinsman Township, Ohio	0.0020801208%
OH901	Kipton Village, Ohio	0.0000973918%
OH902	Kirby Village, Ohio	0.0000472254%
OH903	Kirkersville Village, Ohio	0.0005560173%
OH904	Kirkwood Township, Ohio	0.0000140607%
OH905	Kirtland City, Ohio	0.0223930205%
OH906	Kirtland Hills Village, Ohio	0.0096850050%
OH907	Knox County, Ohio	0.3115395206%
OH908	Knox Township, Columbiana County, Ohio	0.0005191487%
OH909	Knox Township, Guernsey County, Ohio	0.0002039685%
OH910	Knox Township, Jefferson County, Ohio	0.0010041070%
OH911	Knox Township, Vinton County, Ohio	0.0001170406%
OH912	La Grange Township, Ohio	0.0042170664%
OH913	La Rue Village, Ohio	0.0006694539%
OH914	Lafayette Township, Ohio	0.0073805047%
OH915	Lafayette Village, Ohio	0.0000886329%
OH916	Lagrange Village, Ohio	0.0054247251%
OH917	Lake County, Ohio	1.2794251773%
OH918	Lake Township, Stark County, Ohio	0.0367336076%
OH919	Lake Township, Wood County, Ohio	0.0141058613%
OH920	Lakeline Village, Ohio	0.0000947652%
OH921	Lakemore Village, Ohio	0.0083562888%
OH922	Lakeview Village, Ohio	0.0008279569%
OH923	Lakewood City, Ohio	0.1008106545%
OH924	Lancaster City, Ohio	0.1565040398%
OH925	Latty Township, Ohio	0.0000877108%
OH926	Latty Village, Ohio	0.0000219277%
OH927	Laura Village, Ohio	0.0001135686%

State ID	Qualifying Subdivision	Consolidated State Allocation
OH928	Laurel Township, Ohio	0.0001089904%
OH929	Laurelville Village, Ohio	0.0007183460%
OH930	Lawrence County, Ohio	0.5322395718%
OH931	Lawrence Township, Lawrence County, Ohio	0.0093186258%
OH932	Lawrence Township, Stark County, Ohio	0.0140521883%
OH933	Lawrence Township, Tuscarawas County, Ohio	0.0052322595%
OH934	Lawrence Township, Washington County, Ohio	0.0000334215%
OH935	Lebanon City, Ohio	0.0873597515%
OH936	Lebanon Township, Ohio	0.0004736376%
OH937	Lee Township, Athens County, Ohio	0.0005836255%
OH938	Lee Township, Carroll County, Ohio	0.0000980404%
OH939	Lee Township, Monroe County, Ohio	0.0000872768%
OH940	Leesburg Township, Ohio	0.0001989692%
OH941	Leesburg Village, Ohio	0.0054882077%
OH942	Leesville Village, Ohio	0.0000217868%
OH943	Leetonia Village, Ohio	0.0074544436%
OH944	Leipsic Village, Ohio	0.0030629968%
OH945	Lemon Township, Ohio	0.0041524079%
OH946	Lenox Township, Ohio	0.0002582984%
OH947	Leroy Township, Ohio	0.0053731877%
OH948	Letart Township, Ohio	0.0005413001%
OH949	Lewis Township, Ohio	0.0039998104%
OH950	Lewisburg Village, Ohio	0.0132254277%
OH951	Lewisville Village, Ohio	0.0001745536%
OH952	Lexington Township, Ohio	0.0014349065%
OH953	Lexington Village, Ohio	0.0093220146%
OH954	Liberty Center Village, Ohio	0.0002842517%
OH955	Liberty Township, Adams County, Ohio	0.0005534059%
OH956	Liberty Township, Butler County, Ohio	0.1149425287%
OH957	Liberty Township, Clinton County, Ohio	0.0016058699%
OH958	Liberty Township, Crawford County, Ohio	0.0001413900%
OH959	Liberty Township, Darke County, Ohio	0.0010825959%
OH960	Liberty Township, Delaware County, Ohio	0.0646792482%
OH961	Liberty Township, Guernsey County, Ohio	0.0001631748%

State ID	Qualifying Subdivision	Consolidated State Allocation
OH962	Liberty Township, Hancock County, Ohio	0.0013703927%
OH963	Liberty Township, Hardin County, Ohio	0.0010773571%
OH964	Liberty Township, Henry County, Ohio	0.0006632539%
OH965	Liberty Township, Highland County, Ohio	0.0016487208%
OH966	Liberty Township, Jackson County, Ohio	0.0018785750%
OH967	Liberty Township, Knox County, Ohio	0.0003803498%
OH968	Liberty Township, Licking County, Ohio	0.0000926695%
OH969	Liberty Township, Logan County, Ohio	0.0003591138%
OH970	Liberty Township, Mercer County, Ohio	0.0002526633%
OH971	Liberty Township, Putnam County, Ohio	0.0002235160%
OH972	Liberty Township, Seneca County, Ohio	0.0003409218%
OH973	Liberty Township, Trumbull County, Ohio	0.0688997396%
OH974	Liberty Township, Union County, Ohio	0.0017726349%
OH975	Liberty Township, Wood County, Ohio	0.0002142817%
OH976	Lick Township, Ohio	0.0000552522%
OH977	Licking County, Ohio	0.7119059883%
OH978	Licking Township, Licking County, Ohio	0.0031507646%
OH979	Licking Township, Muskingum County, Ohio	0.0012839582%
OH980	Lima City, Ohio	0.1727455397%
OH981	Limaville Village, Ohio	0.0003869608%
OH982	Lincoln Heights Village, Ohio	0.0083419326%
OH983	Lincoln Township, Ohio	0.0001771237%
OH984	Lindsey Village, Ohio	0.0006510581%
OH985	Linndale Village, Ohio	0.0028091858%
OH986	Lisbon Village, Ohio	0.0009584285%
OH987	Litchfield Township, Ohio	0.0019838797%
OH988	Lithopolis Village, Ohio	0.0014069809%
OH989	Liverpool Township, Columbiana County, Ohio	0.0053112911%
OH990	Liverpool Township, Medina County, Ohio	0.0054202427%
OH991	Lockbourne Village, Ohio	0.0000076368%
OH992	Lockington Village, Ohio	0.0000443696%

State ID	Qualifying Subdivision	Consolidated State Allocation
OH993	Lockland Village, Ohio	0.0146296956%
OH994	Lodi Township, Ohio	0.0003856097%
OH995	Lodi Village, Ohio	0.0068845348%
OH996	Logan City, Ohio	0.0081742815%
OH997	Logan County, Ohio	0.2671308245%
OH998	Logan Township, Ohio	0.0001602471%
OH999	London City, Ohio	0.0432082694%
OH1000	Londonderry Township, Ohio	0.0001223811%
OH1001	Lorain City, Ohio	0.2833225817%
OH1002	Lorain County, Ohio	1.3357776870%
OH1003	Lordstown Village, Ohio	0.0208012082%
OH1004	Lore City Village, Ohio	0.0001903706%
OH1005	Lostcreek Township, Ohio	0.0008063368%
OH1006	Loudon Township, Carroll County, Ohio	0.0003703748%
OH1007	Loudon Township, Seneca County, Ohio	0.0000802169%
OH1008	Loudonville Village, Ohio	0.0063961356%
OH1009	Louisville City, Ohio	0.0170110645%
OH1010	Loveland City, Ohio	0.0476149868%
OH1011	Lowell Village, Ohio	0.0000835538%
OH1012	Lowellville Village, Ohio	0.0039921417%
OH1013	Lower Salem Village, Ohio	0.0000220891%
OH1014	Lucas County, Ohio	3.1972089435%
OH1015	Lucas Village, Ohio	0.0007671706%
OH1016	Luckey Village, Ohio	0.0005693772%
OH1017	Ludlow Falls Village, Ohio	0.0002558525%
OH1018	Ludlow Township, Ohio	0.0000501323%
OH1019	Lykens Township, Ohio	0.0000217523%
OH1020	Lynchburg Village, Ohio	0.0028908592%
OH1021	Lyndhurst City, Ohio	0.0338761729%
OH1022	Lynn Township, Ohio	0.0000111068%
OH1023	Lyons Village, Ohio	0.0001442518%
OH1024	Macedonia City, Ohio	0.0527014847%
OH1025	Macksburg Village, Ohio	0.0000477742%
OH1026	Mad River Township, Champaign County, Ohio	0.0003806616%
OH1027	Mad River Township, Clark County, Ohio	0.0132962505%
OH1028	Madeira City, Ohio	0.0133187012%
OH1029	Madison County, Ohio	0.2562654482%
OH1030	Madison Township, Butler County, Ohio	0.0065436778%
OH1031	Madison Township, Clark County, Ohio	0.0028035083%
OH1032	Madison Township, Columbiana County, Ohio	0.0001863611%
OH1033	Madison Township, Fayette County, Ohio	0.0003651188%

State ID	Qualifying Subdivision	Consolidated State Allocation
OH1034	Madison Township, Franklin County, Ohio	0.0648596631%
OH1035	Madison Township, Guernsey County, Ohio	0.0001087832%
OH1036	Madison Township, Hancock County, Ohio	0.0001546084%
OH1037	Madison Township, Highland County, Ohio	0.0000451704%
OH1038	Madison Township, Lake County, Ohio	0.0185550292%
OH1039	Madison Township, Licking County, Ohio	0.0016124501%
OH1040	Madison Township, Muskingum County, Ohio	0.0000200618%
OH1041	Madison Township, Pickaway County, Ohio	0.0005781272%
OH1042	Madison Township, Richland County, Ohio	0.0162443911%
OH1043	Madison Township, Sandusky County, Ohio	0.0010398844%
OH1044	Madison Township, Scioto County, Ohio	0.0090415557%
OH1045	Madison Township, Williams County, Ohio	0.0001650168%
OH1046	Madison Village, Ohio	0.0069557668%
OH1047	Magnetic Springs Village, Ohio	0.0003286007%
OH1048	Magnolia Village, Ohio	0.0039121470%
OH1049	Mahoning County, Ohio	1.6000258367%
OH1050	Maineville Village, Ohio	0.0020362222%
OH1051	Malaga Township, Ohio	0.0000561065%
OH1052	Malinta Village, Ohio	0.0000609111%
OH1053	Malta Village, Ohio	0.0001392397%
OH1054	Malvern Village, Ohio	0.0005882424%
OH1055	Manchester Township, Ohio	0.0013966912%
OH1056	Manchester Village, Ohio	0.0025562084%
OH1057	Mansfield City, Ohio	0.2140405926%
OH1058	Mantua Township, Ohio	0.0000649985%
OH1059	Mantua Village, Ohio	0.0015884020%
OH1060	Maple Heights City, Ohio	0.0395380059%
OH1061	Marble Cliff Village, Ohio	0.0004658471%
OH1062	Marblehead Village, Ohio	0.0019235388%
OH1063	Marengo Village, Ohio	0.0002597814%
OH1064	Margaretta Township, Ohio	0.0078229674%
OH1065	Mariemont Village, Ohio	0.0153812210%
OH1066	Marietta City, Ohio	0.0852917164%
OH1067	Marietta Township, Ohio	0.0002088845%
OH1068	Marion City, Ohio	0.2496505326%
OH1069	Marion County, Ohio	0.3374233828%

State ID	Qualifying Subdivision	Consolidated State Allocation
OH1070	Marion Township, Allen County, Ohio	0.0001840837%
OH1071	Marion Township, Clinton County, Ohio	0.0020965523%
OH1072	Marion Township, Fayette County, Ohio	0.0007695582%
OH1073	Marion Township, Hardin County, Ohio	0.0006108726%
OH1074	Marion Township, Henry County, Ohio	0.0000947506%
OH1075	Marion Township, Hocking County, Ohio	0.0001634856%
OH1076	Marion Township, Marion County, Ohio	0.0526451142%
OH1077	Marion Township, Mercer County, Ohio	0.0015069562%
OH1078	Marion Township, Pike County, Ohio	0.0001943597%
OH1079	Mark Township, Ohio	0.0001324155%
OH1080	Marlboro Township, Delaware County, Ohio	0.0001979724%
OH1081	Marlboro Township, Stark County, Ohio	0.0048193068%
OH1082	Marseilles Township, Ohio	0.0000067465%
OH1083	Marseilles Village, Ohio	0.0000067465%
OH1084	Marshall Township, Ohio	0.0006323861%
OH1085	Marshallville Village, Ohio	0.0004600557%
OH1086	Martins Ferry City, Ohio	0.0347299689%
OH1087	Martinsburg Village, Ohio	0.0000165369%
OH1088	Martinsville Village, Ohio	0.0006022012%
OH1089	Mary Ann Township, Ohio	0.0009452294%
OH1090	Marysville City, Ohio	0.0386422342%
OH1091	Mason City, Ohio	0.1510527828%
OH1092	Mason Township, Ohio	0.0000347710%
OH1093	Massie Township, Ohio	0.0001279911%
OH1094	Massillon City, Ohio	0.1194930798%
OH1095	Matamoras Village, Ohio	0.0003175044%
OH1096	Maumee City, Ohio	0.0830057490%
OH1097	Mayfield Heights City, Ohio	0.0460098010%
OH1098	Mayfield Village, Ohio	0.0222206201%
OH1099	McArthur Village, Ohio	0.0034201873%
OH1100	McClure Village, Ohio	0.0000744469%
OH1101	McComb Village, Ohio	0.0019536880%
OH1102	McConnelsville Village, Ohio	0.0038344466%
OH1103	McDonald Township, Ohio	0.0004331642%
OH1104	McDonald Village, Ohio	0.0085762358%
OH1105	McGuffey Village, Ohio	0.0000111068%
OH1106	McKean Township, Ohio	0.0016773188%
OH1107	McLean Township, Ohio	0.0000088739%

State ID	Qualifying Subdivision	Consolidated State Allocation
OH1108	Mead Township, Ohio	0.0016310431%
OH1109	Mecca Township, Ohio	0.0015686157%
OH1110	Mechanicsburg Village, Ohio	0.0059742716%
OH1111	Medina City, Ohio	0.0850942672%
OH1112	Medina County, Ohio	0.7825696764%
OH1113	Medina Township, Ohio	0.0180792844%
OH1114	Meigs County, Ohio	0.1986571471%
OH1115	Meigs Township, Ohio	0.0019764498%
OH1116	Meigsville Township, Ohio	0.0000749752%
OH1117	Melrose Village, Ohio	0.0001123652%
OH1118	Mendon Village, Ohio	0.0000902369%
OH1119	Mentor City, Ohio	0.2495262895%
OH1120	Mentor-On-The-Lake City, Ohio	0.0195974466%
OH1121	Mercer County, Ohio	0.1655486085%
OH1122	Mesopotamia Township, Ohio	0.0029496795%
OH1123	Metamora Village, Ohio	0.0001589872%
OH1124	Meyers Lake Village, Ohio	0.0015027860%
OH1125	Miami County, Ohio	0.5778482109%
OH1126	Miami Township, Clermont County, Ohio	0.2187745945%
OH1127	Miami Township, Greene County, Ohio	0.0056649739%
OH1128	Miami Township, Hamilton County, Ohio	0.0222368033%
OH1129	Miami Township, Logan County, Ohio	0.0002394092%
OH1130	Miami Township, Montgomery County, Ohio	0.1354683508%
OH1131	Miamisburg City, Ohio	0.1660413479%
OH1132	Middle Point Village, Ohio	0.0010159860%
OH1133	Middleburg Heights City, Ohio	0.0377244809%
OH1134	Middlebury Township, Ohio	0.0002811281%
OH1135	Middlefield Village, Ohio	0.0110639374%
OH1136	Middleport Village, Ohio	0.0066985891%
OH1137	Middleton Township, Columbiana County, Ohio	0.0013311506%
OH1138	Middleton Township, Wood County, Ohio	0.0032264709%
OH1139	Middletown City, Ohio	0.5826547123%
OH1140	Midland Village, Ohio	0.0000223037%
OH1141	Midvale Village, Ohio	0.0004926798%
OH1142	Midway Village, Ohio	0.0006778443%
OH1143	Mifflin Township, Ashland County, Ohio	0.0003416231%
OH1144	Mifflin Township, Franklin County, Ohio	0.0915733216%
OH1145	Mifflin Township, Pike County, Ohio	0.0001267563%

State ID	Qualifying Subdivision	Consolidated State Allocation
OH1146	Mifflin Township, Richland County, Ohio	0.0080552911%
OH1147	Mifflin Township, Wyandot County, Ohio	0.0001214367%
OH1148	Mifflin Village, Ohio	0.0001545438%
OH1149	Milan Township, Ohio	0.0020258680%
OH1150	Milan Village, Ohio	0.0040820332%
OH1151	Milford Center Village, Ohio	0.0000633084%
OH1152	Milford City, Ohio	0.0751522099%
OH1153	Milford Township, Butler County, Ohio	0.0015672512%
OH1154	Milford Township, Defiance County, Ohio	0.0002979348%
OH1155	Mill Creek Township, Coshocton County, Ohio	0.0000229613%
OH1156	Mill Creek Township, Williams County, Ohio	0.0000628635%
OH1157	Mill Township, Ohio	0.0121593375%
OH1158	Millbury Village, Ohio	0.0009905091%
OH1159	Millcreek Township, Ohio	0.0000180881%
OH1160	Milledgeville Village, Ohio	0.0000257235%
OH1161	Miller City Village, Ohio	0.0000248351%
OH1162	Miller Township, Ohio	0.0008599212%
OH1163	Millersburg Village, Ohio	0.0018263731%
OH1164	Millersport Village, Ohio	0.0058664571%
OH1165	Millville Village, Ohio	0.0076100550%
OH1166	Millwood Township, Ohio	0.0000543916%
OH1167	Milton Center Village, Ohio	0.0000061223%
OH1168	Milton Township, Ashland County, Ohio	0.0000162678%
OH1169	Milton Township, Mahoning County, Ohio	0.0048642711%
OH1170	Miltonsburg Village, Ohio	0.0000172975%
OH1171	Mineral City Village, Ohio	0.0026506173%
OH1172	Minerva Park Village, Ohio	0.0030776456%
OH1173	Minerva Village, Ohio	0.0118214870%
OH1174	Mingo Junction Village, Ohio	0.0074909571%
OH1175	Minster Village, Ohio	0.0056442578%
OH1176	Mississinawa Township, Ohio	0.0003444623%
OH1177	Mogadore Village, Ohio	0.0107618198%
OH1178	Monclova Township, Ohio	0.0108181339%
OH1179	Monday Creek Township, Ohio	0.0000430312%
OH1180	Monroe City, Ohio	0.1198391105%
OH1181	Monroe County, Ohio	0.0768222745%
OH1182	Monroe Township, Adams County, Ohio	0.0016865705%
OH1183	Monroe Township, Allen County, Ohio	0.0002727166%

State ID	Qualifying Subdivision	Consolidated State Allocation
OH1184	Monroe Township, Carroll County, Ohio	0.0010130841%
OH1185	Monroe Township, Clermont County, Ohio	0.0034821896%
OH1186	Monroe Township, Darke County, Ohio	0.0006151113%
OH1187	Monroe Township, Guernsey County, Ohio	0.0001903706%
OH1188	Monroe Township, Harrison County, Ohio	0.0003530677%
OH1189	Monroe Township, Knox County, Ohio	0.0021828768%
OH1190	Monroe Township, Licking County, Ohio	0.0160503654%
OH1191	Monroe Township, Logan County, Ohio	0.0001895323%
OH1192	Monroe Township, Muskingum County, Ohio	0.0001203711%
OH1193	Monroe Township, Perry County, Ohio	0.0000753046%
OH1194	Monroe Township, Pickaway County, Ohio	0.0003740823%
OH1195	Monroe Township, Preble County, Ohio	0.0020296448%
OH1196	Monroe Township, Putnam County, Ohio	0.0007698884%
OH1197	Monroe Township, Richland County, Ohio	0.0011596765%
OH1198	Monroeville Village, Ohio	0.0057515643%
OH1199	Monterey Township, Ohio	0.0001158972%
OH1200	Montezuma Village, Ohio	0.0003248528%
OH1201	Montgomery City, Ohio	0.0491831661%
OH1202	Montgomery County, Ohio	5.1644746001%
OH1203	Montgomery Township, Marion County, Ohio	0.0007252418%
OH1204	Montgomery Township, Wood County, Ohio	0.0011448768%
OH1205	Montpelier Village, Ohio	0.0054141221%
OH1206	Montville Township, Geauga County, Ohio	0.0005742528%
OH1207	Montville Township, Medina County, Ohio	0.0202875314%
OH1208	Moorefield Township, Ohio	0.0090773788%
OH1209	Moraine City, Ohio	0.0890573422%
OH1210	Moreland Hills Village, Ohio	0.0034611065%
OH1211	Morgan County, Ohio	0.0873568346%
OH1212	Morgan Township, Ashtabula County, Ohio	0.0013032327%

State ID	Qualifying Subdivision	Consolidated State Allocation
OH1213	Morgan Township, Butler County, Ohio	0.0060266465%
OH1214	Morgan Township, Gallia County, Ohio	0.0004498495%
OH1215	Morgan Township, Knox County, Ohio	0.0013394926%
OH1216	Morgan Township, Scioto County, Ohio	0.0014216283%
OH1217	Morral Village, Ohio	0.0008926053%
OH1218	Morris Township, Ohio	0.0000330739%
OH1219	Morristown Village, Ohio	0.0004780643%
OH1220	Morrow County, Ohio	0.2192732037%
OH1221	Morrow Village, Ohio	0.0015475289%
OH1222	Moscow Village, Ohio	0.0010343137%
OH1223	Moulton Township, Ohio	0.0002403706%
OH1224	Mount Blanchard Village, Ohio	0.0000632489%
OH1225	Mount Cory Village, Ohio	0.0001194701%
OH1226	Mount Eaton Village, Ohio	0.0003286112%
OH1227	Mount Gilead Village, Ohio	0.0047705309%
OH1228	Mount Healthy City, Ohio	0.0150472097%
OH1229	Mount Orab Village, Ohio	0.0858253892%
OH1230	Mount Pleasant Township, Ohio	0.0009562924%
OH1231	Mount Pleasant Village, Ohio	0.0001593821%
OH1232	Mount Sterling Village, Ohio	0.0092167280%
OH1233	Mount Vernon City, Ohio	0.0916146794%
OH1234	Mount Victory Village, Ohio	0.0003726928%
OH1235	Mowrystown Village, Ohio	0.0099826658%
OH1236	Munroe Falls City, Ohio	0.0144765234%
OH1237	Munson Township, Ohio	0.0126431327%
OH1238	Murray City Village, Ohio	0.0003666041%
OH1239	Muskingum County, Ohio	0.5186890264%
OH1240	Muskingum Township, Ohio	0.0034591272%
OH1241	Mutual Village, Ohio	0.0000512624%
OH1242	Napoleon City, Ohio	0.0200262083%
OH1243	Napoleon Township, Ohio	0.0008595230%
OH1244	Nashville Village, Ohio	0.0001163295%
OH1245	Navarre Village, Ohio	0.0045125337%
OH1246	Nellie Village, Ohio	0.0000766034%
OH1247	Nelsonville City, Ohio	0.0153618582%
OH1248	Nevada Village, Ohio	0.0000539719%
OH1249	Neville Village, Ohio	0.0000172386%
OH1250	New Albany City, Ohio	0.0355984449%
OH1251	New Alexandria Village, Ohio	0.0001593821%
OH1252	New Athens Village, Ohio	0.0001049661%
OH1253	New Bavaria Village, Ohio	0.0001925555%
OH1254	New Bloomington Village, Ohio	0.0006286558%
OH1255	New Boston Village, Ohio	0.0217793450%
OH1256	New Bremen Village, Ohio	0.0076829566%
OH1257	New Carlisle City, Ohio	0.0121258538%

State ID	Qualifying Subdivision	Consolidated State Allocation
OH1258	New Concord Village, Ohio	0.0073426360%
OH1259	New Franklin City, Ohio	0.0293867642%
OH1260	New Haven Township, Ohio	0.0016334992%
OH1261	New Holland Village, Ohio	0.0001903085%
OH1262	New Jasper Township, Ohio	0.0016406755%
OH1263	New Knoxville Village, Ohio	0.0011840478%
OH1264	New Lebanon Village, Ohio	0.0058388430%
OH1265	New Lexington Village, Ohio	0.0129954223%
OH1266	New London Township, Ohio	0.0002882646%
OH1267	New London Village, Ohio	0.0030473682%
OH1268	New Madison Village, Ohio	0.0016608005%
OH1269	New Market Township, Ohio	0.0002484374%
OH1270	New Miami Village, Ohio	0.0024074272%
OH1271	New Middletown Village, Ohio	0.0007615778%
OH1272	New Paris Village, Ohio	0.0016204423%
OH1273	New Philadelphia City, Ohio	0.0774788253%
OH1274	New Richmond Village, Ohio	0.0330808011%
OH1275	New Riegel Village, Ohio	0.0002406507%
OH1276	New Russia Township, Ohio	0.0008375698%
OH1277	New Straitsville Village, Ohio	0.0021300444%
OH1278	New Vienna Village, Ohio	0.0009144537%
OH1279	New Washington Village, Ohio	0.0012290055%
OH1280	New Waterford Village, Ohio	0.0048586998%
OH1281	New Weston Village, Ohio	0.0000861156%
OH1282	Newark City, Ohio	0.1777772576%
OH1283	Newark Township, Ohio	0.0018255901%
OH1284	Newberry Township, Ohio	0.0019874499%
OH1285	Newburgh Heights Village, Ohio	0.0042789708%
OH1286	Newbury Township, Ohio	0.0027755552%
OH1287	Newcomerstown Village, Ohio	0.0076759513%
OH1288	Newton Falls Village, Ohio	0.0365044154%
OH1289	Newton Township, Licking County, Ohio	0.0011027676%
OH1290	Newton Township, Muskingum County, Ohio	0.0020262466%
OH1291	Newton Township, Pike County, Ohio	0.0002281614%
OH1292	Newton Township, Trumbull County, Ohio	0.0026939270%
OH1293	Newtonsville Village, Ohio	0.0005516340%
OH1294	Newtown Village, Ohio	0.0057282940%
OH1295	Ney Village, Ohio	0.0000662077%
OH1296	Nile Township, Ohio	0.0052315920%
OH1297	Niles City, Ohio	0.1643806952%
OH1298	Nimishillen Township, Ohio	0.0122610291%
OH1299	Noble County, Ohio	0.0987433126%
OH1300	Noble Township, Auglaize County, Ohio	0.0000089026%

State ID	Qualifying Subdivision	Consolidated State Allocation
OH1301	Noble Township, Defiance County, Ohio	0.0003420733%
OH1302	Noble Township, Noble County, Ohio	0.0008278915%
OH1303	North Baltimore Village, Ohio	0.0034529973%
OH1304	North Bend Village, Ohio	0.0025608089%
OH1305	North Bloomfield Township, Ohio	0.0004132886%
OH1306	North Canton City, Ohio	0.0524878920%
OH1307	North College Hill City, Ohio	0.0194144077%
OH1308	North Fairfield Village, Ohio	0.0000686344%
OH1309	North Hampton Village, Ohio	0.0018236413%
OH1310	North Kingsville Village, Ohio	0.0058586766%
OH1311	North Lewisburg Village, Ohio	0.0040569220%
OH1312	North Olmsted City, Ohio	0.0399884238%
OH1313	North Perry Village, Ohio	0.0021416939%
OH1314	North Randall Village, Ohio	0.0010272691%
OH1315	North Ridgeville City, Ohio	0.1099748579%
OH1316	North Robinson Village, Ohio	0.0000652569%
OH1317	North Royalton City, Ohio	0.0490362937%
OH1318	North Star Village, Ohio	0.0006041028%
OH1319	North Township, Ohio	0.0006202542%
OH1320	Northfield Center Township, Ohio	0.0055419447%
OH1321	Northfield Village, Ohio	0.0204907382%
OH1322	Northwest Township, Ohio	0.0003378915%
OH1323	Northwood City, Ohio	0.0154037964%
OH1324	Norton City, Ohio	0.0374368018%
OH1325	Norwalk City, Ohio	0.0671930963%
OH1326	Norwalk Township, Ohio	0.0009746088%
OH1327	Norwich Township, Franklin County, Ohio	0.0881825657%
OH1328	Norwich Township, Huron County, Ohio	0.0005490754%
OH1329	Norwich Village, Ohio	0.0000776491%
OH1330	Norwood City, Ohio	0.1133550899%
OH1331	Nottingham Township, Ohio	0.0002290169%
OH1332	Oak Harbor Village, Ohio	0.0043210926%
OH1333	Oak Hill Village, Ohio	0.0009945397%
OH1334	Oakwood City, Ohio	0.0665292396%
OH1335	Oakwood Village, Cuyahoga County, Ohio	0.0160412015%
OH1336	Oakwood Village, Paulding County, Ohio	0.0006103209%
OH1337	Oberlin City, Ohio	0.0523286319%
OH1338	Obetz Village, Ohio	0.0012677151%
OH1339	Octa Village, Ohio	0.0000132032%
OH1340	Ohio City Village, Ohio	0.0013381279%
OH1341	Ohio Township, Clermont County, Ohio	0.0024995915%

State ID	Qualifying Subdivision	Consolidated State Allocation
OH1342	Ohio Township, Monroe County, Ohio	0.0002805325%
OH1343	Old Washington Village, Ohio	0.0016589439%
OH1344	Olive Township, Meigs County, Ohio	0.0005413001%
OH1345	Olive Township, Noble County, Ohio	0.0002069729%
OH1346	Olmsted Falls City, Ohio	0.0116318466%
OH1347	Olmsted Township, Ohio	0.0148163807%
OH1348	Ontario City, Ohio	0.0192773910%
OH1349	Orange Township, Ashland County, Ohio	0.0004880329%
OH1350	Orange Township, Carroll County, Ohio	0.0003703748%
OH1351	Orange Township, Delaware County, Ohio	0.0531556020%
OH1352	Orange Township, Meigs County, Ohio	0.0003383126%
OH1353	Orange Township, Shelby County, Ohio	0.0011891054%
OH1354	Orange Village, Ohio	0.0100237754%
OH1355	Orangeville Village, Ohio	0.0005285553%
OH1356	Oregon City, Ohio	0.0936692081%
OH1357	Orrville City, Ohio	0.0089614214%
OH1358	Orwell Township, Ohio	0.0004813742%
OH1359	Orwell Village, Ohio	0.0054712290%
OH1360	Osgood Village, Ohio	0.0000984178%
OH1361	Osnaburg Township, Ohio	0.0017515756%
OH1362	Ostrander Village, Ohio	0.0001237328%
OH1363	Ottawa County, Ohio	0.2393019717%
OH1364	Ottawa Hills Village, Ohio	0.0134021121%
OH1365	Ottawa Village, Ohio	0.0047352274%
OH1366	Ottoville Village, Ohio	0.0010927448%
OH1367	Otway Village, Ohio	0.0001137303%
OH1368	Owensville Village, Ohio	0.0008791667%
OH1369	Oxford City, Ohio	0.0794612533%
OH1370	Oxford Township, Butler County, Ohio	0.1101599888%
OH1371	Oxford Township, Coshocton County, Ohio	0.0002143057%
OH1372	Oxford Township, Guernsey County, Ohio	0.0001223811%
OH1373	Oxford Township, Tuscarawas County, Ohio	0.0000788288%
OH1374	Painesville City, Ohio	0.0828627046%
OH1375	Painesville Township, Ohio	0.0334236916%
OH1376	Paint Township, Fayette County, Ohio	0.0000280861%

State ID	Qualifying Subdivision	Consolidated State Allocation
OH1377	Paint Township, Highland County, Ohio	0.0002710226%
OH1378	Paint Township, Holmes County, Ohio	0.0004187862%
OH1379	Paint Township, Madison County, Ohio	0.0000155425%
OH1380	Paint Township, Ross County, Ohio	0.0003836542%
OH1381	Paint Township, Wayne County, Ohio	0.0001894347%
OH1382	Palestine Village, Ohio	0.0005121741%
OH1383	Palmer Township, Ohio	0.0000584877%
OH1384	Palmyra Township, Ohio	0.0008124819%
OH1385	Pandora Village, Ohio	0.0009188990%
OH1386	Paris Township, Portage County, Ohio	0.0001503091%
OH1387	Paris Township, Stark County, Ohio	0.0010390703%
OH1388	Parkman Township, Ohio	0.0008613792%
OH1389	Parma City, Ohio	0.1543116176%
OH1390	Parma Heights City, Ohio	0.0326118418%
OH1391	Parral Village, Ohio	0.0000098536%
OH1392	Pataskala City, Ohio	0.0174033408%
OH1393	Patterson Village, Ohio	0.0000841761%
OH1394	Paulding County, Ohio	0.0839721160%
OH1395	Paulding Township, Ohio	0.0001534939%
OH1396	Paulding Village, Ohio	0.0016847781%
OH1397	Paxton Township, Ohio	0.0010329152%
OH1398	Payne Village, Ohio	0.0005664655%
OH1399	Pease Township, Ohio	0.0005202465%
OH1400	Pebble Township, Ohio	0.0003464673%
OH1401	Pee Pee Township, Ohio	0.0015041749%
OH1402	Peebles Village, Ohio	0.0067989872%
OH1403	Pemberville Village, Ohio	0.0012856905%
OH1404	Peninsula Village, Ohio	0.0050407601%
OH1405	Penn Township, Ohio	0.0001392397%
OH1406	Pepper Pike City, Ohio	0.0193758750%
OH1407	Perkins Township, Ohio	0.0512077107%
OH1408	Perry County, Ohio	0.2380485965%
OH1409	Perry Township, Allen County, Ohio	0.0045543679%
OH1410	Perry Township, Brown County, Ohio	0.0143559087%
OH1411	Perry Township, Columbiana County, Ohio	0.0048853229%
OH1412	Perry Township, Fayette County, Ohio	0.0003538844%
OH1413	Perry Township, Franklin County, Ohio	0.0091642053%

State ID	Qualifying Subdivision	Consolidated State Allocation
OH1414	Perry Township, Lake County, Ohio	0.0025586608%
OH1415	Perry Township, Lawrence County, Ohio	0.0009214313%
OH1416	Perry Township, Licking County, Ohio	0.0016309840%
OH1417	Perry Township, Logan County, Ohio	0.0026933538%
OH1418	Perry Township, Monroe County, Ohio	0.0000872768%
OH1419	Perry Township, Muskingum County, Ohio	0.0027986277%
OH1420	Perry Township, Pickaway County, Ohio	0.0000291493%
OH1421	Perry Township, Pike County, Ohio	0.0001267563%
OH1422	Perry Township, Putnam County, Ohio	0.0000082784%
OH1423	Perry Township, Richland County, Ohio	0.0004103471%
OH1424	Perry Township, Stark County, Ohio	0.0537347763%
OH1425	Perry Township, Wood County, Ohio	0.0001040797%
OH1426	Perry Village, Ohio	0.0054300469%
OH1427	Perrysburg City, Ohio	0.0576846462%
OH1428	Perrysburg Township, Ohio	0.0342177338%
OH1429	Perrysville Village, Ohio	0.0008459238%
OH1430	Peru Township, Huron County, Ohio	0.0000274538%
OH1431	Peru Township, Morrow County, Ohio	0.0000708495%
OH1432	Phillipsburg Village, Ohio	0.0041962937%
OH1433	Philo Village, Ohio	0.0010532470%
OH1434	Pickaway County, Ohio	0.0934088328%
OH1435	Pickaway Township, Ohio	0.0005441197%
OH1436	Pickerington City, Ohio	0.0350194279%
OH1437	Pierce Township, Ohio	0.0721778605%
OH1438	Pierpont Township, Ohio	0.0011858243%
OH1439	Pike County, Ohio	0.3072066041%
OH1440	Pike Township, Brown County, Ohio	0.0024184900%
OH1441	Pike Township, Clark County, Ohio	0.0026810249%
OH1442	Pike Township, Perry County, Ohio	0.0022268646%
OH1443	Pike Township, Stark County, Ohio	0.0021276201%
OH1444	Piketon Village, Ohio	0.0023999196%

State ID	Qualifying Subdivision	Consolidated State Allocation
OH1445	Pioneer Village, Ohio	0.0028760068%
OH1446	Piqua City, Ohio	0.0869480927%
OH1447	Pitsburg Village, Ohio	0.0005659024%
OH1448	Pitt Township, Ohio	0.0002833522%
OH1449	Plain City Village, Ohio	0.0102501421%
OH1450	Plain Township, Franklin County, Ohio	0.0388485937%
OH1451	Plain Township, Stark County, Ohio	0.0464019090%
OH1452	Plain Township, Wayne County, Ohio	0.0002976831%
OH1453	Plain Township, Wood County, Ohio	0.0002693828%
OH1454	Plainfield Village, Ohio	0.0000153076%
OH1455	Pleasant City Village, Ohio	0.0008654831%
OH1456	Pleasant Hill Village, Ohio	0.0002839214%
OH1457	Pleasant Plain Village, Ohio	0.0000116356%
OH1458	Pleasant Township, Brown County, Ohio	0.0012092450%
OH1459	Pleasant Township, Clark County, Ohio	0.0032390047%
OH1460	Pleasant Township, Fairfield County, Ohio	0.0068849393%
OH1461	Pleasant Township, Franklin County, Ohio	0.0137844922%
OH1462	Pleasant Township, Hancock County, Ohio	0.0002811062%
OH1463	Pleasant Township, Henry County, Ohio	0.0002233406%
OH1464	Pleasant Township, Knox County, Ohio	0.0045641970%
OH1465	Pleasant Township, Marion County, Ohio	0.0096326984%
OH1466	Pleasant Township, Perry County, Ohio	0.0001828826%
OH1467	Pleasant Township, Seneca County, Ohio	0.0003208676%
OH1468	Pleasant Township, Van Wert County, Ohio	0.0002849717%
OH1469	Pleasantville Village, Ohio	0.0000570350%
OH1470	Plymouth Township, Ohio	0.0017493844%
OH1471	Plymouth Village, Ohio	0.0065060016%
OH1472	Poland Township, Ohio	0.0148262002%
OH1473	Poland Village, Ohio	0.0061663235%
OH1474	Polk Township, Ohio	0.0010767393%
OH1475	Polk Village, Ohio	0.0000406694%
OH1476	Pomeroy Village, Ohio	0.0093881741%
OH1477	Port Clinton City, Ohio	0.0145364578%
OH1478	Port Jefferson Village, Ohio	0.0003105872%

State ID	Qualifying Subdivision	Consolidated State Allocation
OH1479	Port Washington Village, Ohio	0.0003251687%
OH1480	Port William Village, Ohio	0.0010928837%
OH1481	Portage County, Ohio	0.9187057360%
OH1482	Portage Township, Hancock County, Ohio	0.0001686637%
OH1483	Portage Township, Ottawa County, Ohio	0.0000480885%
OH1484	Portage Township, Wood County, Ohio	0.0001408137%
OH1485	Portage Village, Ohio	0.0016040519%
OH1486	Porter Township, Delaware County, Ohio	0.0036954857%
OH1487	Porter Township, Scioto County, Ohio	0.0395496982%
OH1488	Portsmouth City, Ohio	0.2233662325%
OH1489	Potsdam Village, Ohio	0.0000227137%
OH1490	Powell City, Ohio	0.0184361841%
OH1491	Powhatan Point Village, Ohio	0.0016591645%
OH1492	Prairie Township, Franklin County, Ohio	0.0344574120%
OH1493	Prairie Township, Holmes County, Ohio	0.0003867956%
OH1494	Preble County, Ohio	0.3067055248%
OH1495	Proctorville Village, Ohio	0.0018254771%
OH1496	Prospect Village, Ohio	0.0011157566%
OH1497	Providence Township, Ohio	0.0026476678%
OH1498	Pulaski Township, Ohio	0.0002907439%
OH1499	Pultney Township, Ohio	0.0018560145%
OH1500	Pusheta Township, Ohio	0.0002670784%
OH1501	Put In Bay Township, Ohio	0.0034623699%
OH1502	Put-In-Bay Village, Ohio	0.0040050827%
OH1503	Putnam County, Ohio	0.1372967601%
OH1504	Quaker City Village, Ohio	0.0004351328%
OH1505	Quincy Village, Ohio	0.0003391631%
OH1506	Raccoon Township, Ohio	0.0003561309%
OH1507	Racine Village, Ohio	0.0010826003%
OH1508	Radnor Township, Ohio	0.0001814747%
OH1509	Randolph Township, Ohio	0.0013730943%
OH1510	Range Township, Ohio	0.0007149570%
OH1511	Rarden Township, Ohio	0.0020471447%
OH1512	Rarden Village, Ohio	0.0005117862%
OH1513	Ravenna City, Ohio	0.0218557620%
OH1514	Ravenna Township, Ohio	0.0059636168%
OH1515	Rawson Village, Ohio	0.0001405531%
OH1516	Rayland Village, Ohio	0.0003984552%
OH1517	Reading City, Ohio	0.0457344992%
OH1518	Reading Township, Ohio	0.0019364040%
OH1519	Recovery Township, Ohio	0.0000812132%
OH1520	Reily Township, Ohio	0.0012764211%

State ID	Qualifying Subdivision	Consolidated State Allocation
OH1521	Reminderville Village, Ohio	0.0151415568%
OH1522	Rendville Village, Ohio	0.0001828826%
OH1523	Republic Village, Ohio	0.0011130095%
OH1524	Reynoldsburg City, Ohio	0.0697130845%
OH1525	Rice Township, Ohio	0.0003978688%
OH1526	Richfield Township, Henry County, Ohio	0.0023349246%
OH1527	Richfield Township, Lucas County, Ohio	0.0047039321%
OH1528	Richfield Township, Summit County, Ohio	0.0095996121%
OH1529	Richfield Village, Ohio	0.0399887454%
OH1530	Richland County, Ohio	0.7455113947%
OH1531	Richland Township, Allen County, Ohio	0.0002999883%
OH1532	Richland Township, Belmont County, Ohio	0.0026715361%
OH1533	Richland Township, Clinton County, Ohio	0.0005798975%
OH1534	Richland Township, Darke County, Ohio	0.0002952534%
OH1535	Richland Township, Fairfield County, Ohio	0.0003503579%
OH1536	Richland Township, Holmes County, Ohio	0.0001483201%
OH1537	Richland Township, Wyandot County, Ohio	0.0001079437%
OH1538	Richmond Heights City, Ohio	0.0218650269%
OH1539	Richmond Township, Ashtabula County, Ohio	0.0003170025%
OH1540	Richmond Township, Huron County, Ohio	0.0015099572%
OH1541	Richmond Village, Ohio	0.0007609773%
OH1542	Richwood Village, Ohio	0.0014048433%
OH1543	Ridgefield Township, Ohio	0.0003431721%
OH1544	Ridgeville Township, Ohio	0.0002165727%
OH1545	Ridgeway Village, Ohio	0.0003864298%
OH1546	Riley Township, Ohio	0.0007202182%
OH1547	Rio Grande Village, Ohio	0.0014432672%
OH1548	Ripley Township, Holmes County, Ohio	0.0000348988%
OH1549	Ripley Township, Huron County, Ohio	0.0000137269%
OH1550	Ripley Village, Ohio	0.0111932679%
OH1551	Risingsun Village, Ohio	0.0004530528%
OH1552	Rittman City, Ohio	0.0059649971%
OH1553	Riverlea Village, Ohio	0.0001680104%
OH1554	Riverside City, Ohio	0.0817797700%
OH1555	Roaming Shores Village, Ohio	0.0034987688%

State ID	Qualifying Subdivision	Consolidated State Allocation
OH1556	Rochester Township, Ohio	0.0013537465%
OH1557	Rochester Village, Ohio	0.0000194784%
OH1558	Rock Creek Village, Ohio	0.0002113350%
OH1559	Rockford Village, Ohio	0.0018408327%
OH1560	Rocky Ridge Village, Ohio	0.0002129632%
OH1561	Rocky River City, Ohio	0.0503638414%
OH1562	Rogers Village, Ohio	0.0005457718%
OH1563	Rome Township, Ashtabula County, Ohio	0.0014206410%
OH1564	Rome Township, Athens County, Ohio	0.0002813909%
OH1565	Rome Township, Lawrence County, Ohio	0.0010605153%
OH1566	Rome Village, Ohio	0.0002586036%
OH1567	Rootstown Township, Ohio	0.0026527533%
OH1568	Rose Township, Ohio	0.0004793086%
OH1569	Roseville Village, Ohio	0.0016522526%
OH1570	Ross County, Ohio	1.0109583321%
OH1571	Ross Township, Butler County, Ohio	0.0261747113%
OH1572	Ross Township, Greene County, Ohio	0.0002579678%
OH1573	Ross Township, Jefferson County, Ohio	0.0004940844%
OH1574	Rossburg Village, Ohio	0.0000984178%
OH1575	Rossford City, Ohio	0.0126977241%
OH1576	Roswell Village, Ohio	0.0002759007%
OH1577	Roundhead Township, Ohio	0.0002332423%
OH1578	Royalton Township, Ohio	0.0009661532%
OH1579	Rumley Township, Ohio	0.0006297965%
OH1580	Rush Creek Township, Ohio	0.0026562014%
OH1581	Rush Township, Scioto County, Ohio	0.0047482384%
OH1582	Rush Township, Tuscarawas County, Ohio	0.0000689752%
OH1583	Rushcreek Township, Ohio	0.0004189662%
OH1584	Rushsylvania Village, Ohio	0.0000099754%
OH1585	Rushville Village, Ohio	0.0000244436%
OH1586	Russell Township, Ohio	0.0185770784%
OH1587	Russells Point Village, Ohio	0.0022943385%
OH1588	Russellville Village, Ohio	0.0057671685%
OH1589	Russia Village, Ohio	0.0003460829%
OH1590	Rutland Village, Ohio	0.0004567220%
OH1591	Sabina Village, Ohio	0.0072933257%
OH1592	Sagamore Hills Township, Ohio	0.0226207726%
OH1593	Salem City, Ohio	0.0383095249%
OH1594	Salem Township, Auglaize County, Ohio	0.0001157340%

State ID	Qualifying Subdivision	Consolidated State Allocation
OH1595	Salem Township, Champaign County, Ohio	0.0003806616%
OH1596	Salem Township, Columbiana County, Ohio	0.0009051824%
OH1597	Salem Township, Muskingum County, Ohio	0.0003912060%
OH1598	Salem Township, Ottawa County, Ohio	0.0007213271%
OH1599	Salem Township, Shelby County, Ohio	0.0010648705%
OH1600	Salem Township, Tuscarawas County, Ohio	0.0026407637%
OH1601	Salem Township, Warren County, Ohio	0.0074583911%
OH1602	Salem Township, Washington County, Ohio	0.0005013228%
OH1603	Salesville Village, Ohio	0.0000679895%
OH1604	Salineville Village, Ohio	0.0034609917%
OH1605	Salisbury Township, Ohio	0.0003552282%
OH1606	Salt Creek Township, Hocking County, Ohio	0.0001833021%
OH1607	Salt Creek Township, Holmes County, Ohio	0.0000465318%
OH1608	Salt Creek Township, Wayne County, Ohio	0.0001391765%
OH1609	Salt Lick Township, Ohio	0.0000430312%
OH1610	Salt Rock Township, Ohio	0.0007066458%
OH1611	Saltcreek Township, Ohio	0.0003935151%
OH1612	Sandusky City, Ohio	0.1261336610%
OH1613	Sandusky County, Ohio	0.3072903644%
OH1614	Sandusky Township, Crawford County, Ohio	0.0000108762%
OH1615	Sandusky Township, Sandusky County, Ohio	0.0015100930%
OH1616	Sandy Township, Stark County, Ohio	0.0049479536%
OH1617	Sandy Township, Tuscarawas County, Ohio	0.0006897517%
OH1618	Sarahsville Village, Ohio	0.0000689910%
OH1619	Sardinia Village, Ohio	0.0044028921%
OH1620	Savannah Village, Ohio	0.0002294615%
OH1621	Saybrook Township, Ohio	0.0161906113%
OH1622	Scio Village, Ohio	0.0001526779%
OH1623	Scioto County, Ohio	0.9401796346%
OH1624	Scioto Township, Delaware County, Ohio	0.0019714756%
OH1625	Scioto Township, Pickaway County, Ohio	0.0062913839%

State ID	Qualifying Subdivision	Consolidated State Allocation
OH1626	Scioto Township, Pike County, Ohio	0.0002619631%
OH1627	Scioto Township, Ross County, Ohio	0.0146969071%
OH1628	Scipio Township, Meigs County, Ohio	0.0004736376%
OH1629	Scipio Township, Seneca County, Ohio	0.0005615183%
OH1630	Scott Township, Marion County, Ohio	0.0001301716%
OH1631	Scott Township, Sandusky County, Ohio	0.0009313747%
OH1632	Scott Village, Ohio	0.0006416289%
OH1633	Seal Township, Ohio	0.0013351665%
OH1634	Seaman Village, Ohio	0.0025035030%
OH1635	Sebring Village, Ohio	0.0078737318%
OH1636	Seneca County, Ohio	0.2801274556%
OH1637	Seneca Township, Monroe County, Ohio	0.0000124681%
OH1638	Seneca Township, Noble County, Ohio	0.0000172477%
OH1639	Senecaville Village, Ohio	0.0007886782%
OH1640	Seven Hills City, Ohio	0.0208535620%
OH1641	Seven Mile Village, Ohio	0.0013087356%
OH1642	Seville Village, Ohio	0.0055383307%
OH1643	Shadyside Village, Ohio	0.0078177582%
OH1644	Shaker Heights City, Ohio	0.1048407101%
OH1645	Shalersville Township, Ohio	0.0000934354%
OH1646	Sharon Township, Franklin County, Ohio	0.0053763338%
OH1647	Sharon Township, Medina County, Ohio	0.0058099333%
OH1648	Sharon Township, Richland County, Ohio	0.0000802853%
OH1649	Sharonville City, Ohio	0.1284229161%
OH1650	Shawnee Hills Village, Ohio	0.0030520752%
OH1651	Shawnee Township, Ohio	0.0289829613%
OH1652	Shawnee Village, Ohio	0.0005916790%
OH1653	Sheffield Lake City, Ohio	0.0113266702%
OH1654	Sheffield Township, Ashtabula County, Ohio	0.0012562693%
OH1655	Sheffield Township, Lorain County, Ohio	0.0039054125%
OH1656	Sheffield Village, Ohio	0.0383431647%
OH1657	Shelby City, Ohio	0.0301426674%
OH1658	Shelby County, Ohio	0.2601922372%
OH1659	Sherrodsville Village, Ohio	0.0010675510%
OH1660	Sherwood Village, Ohio	0.0012358778%
OH1661	Shiloh Village, Ohio	0.0001516500%

State ID	Qualifying Subdivision	Consolidated State Allocation
OH1662	Shreve Village, Ohio	0.0012061965%
OH1663	Sidney City, Ohio	0.0768126600%
OH1664	Silver Lake Village, Ohio	0.0087129009%
OH1665	Silverton Village, Ohio	0.0117488480%
OH1666	Sinking Spring Village, Ohio	0.0018697801%
OH1667	Smith Township, Belmont County, Ohio	0.0011670394%
OH1668	Smith Township, Mahoning County, Ohio	0.0056258490%
OH1669	Smithfield Township, Ohio	0.0003028259%
OH1670	Smithfield Village, Ohio	0.0021516579%
OH1671	Smithville Village, Ohio	0.0012448566%
OH1672	Solon City, Ohio	0.0575665779%
OH1673	Somerford Township, Ohio	0.0018806477%
OH1674	Somers Township, Ohio	0.0009493500%
OH1675	Somerset Village, Ohio	0.0013447250%
OH1676	Somerville Village, Ohio	0.0001615723%
OH1677	South Amherst Village, Ohio	0.0020257501%
OH1678	South Bloomfield Township, Ohio	0.0004782339%
OH1679	South Bloomfield Village, Ohio	0.0012874261%
OH1680	South Charleston Village, Ohio	0.0026810249%
OH1681	South Euclid City, Ohio	0.0416202012%
OH1682	South Lebanon Village, Ohio	0.0058643200%
OH1683	South Point Village, Ohio	0.0061370801%
OH1684	South Russell Village, Ohio	0.0067283287%
OH1685	South Salem Village, Ohio	0.0005572426%
OH1686	South Solon Village, Ohio	0.0007460421%
OH1687	South Vienna Village, Ohio	0.0009118207%
OH1688	South Webster Village, Ohio	0.0024736332%
OH1689	South Zanesville Village, Ohio	0.0015547932%
OH1690	Southington Township, Ohio	0.0014492645%
OH1691	Sparta Village, Ohio	0.0000770825%
OH1692	Spencer Township, Allen County, Ohio	0.0001636300%
OH1693	Spencer Township, Guernsey County, Ohio	0.0001631748%
OH1694	Spencer Township, Lucas County, Ohio	0.0024565990%
OH1695	Spencer Township, Medina County, Ohio	0.0000708528%
OH1696	Spencer Village, Ohio	0.0016178066%
OH1697	Spencerville Village, Ohio	0.0025294469%
OH1698	Sprigg Township, Ohio	0.0001054107%
OH1699	Spring Valley Township, Ohio	0.0070786377%
OH1700	Spring Valley Village, Ohio	0.0001444620%
OH1701	Springboro City, Ohio	0.0299889938%
OH1702	Springdale City, Ohio	0.0692154947%
OH1703	Springfield City, Ohio	0.4735887613%

State ID	Qualifying Subdivision	Consolidated State Allocation
OH1704	Springfield Township, Clark County, Ohio	0.0105063514%
OH1705	Springfield Township, Gallia County, Ohio	0.0009746740%
OH1706	Springfield Township, Hamilton County, Ohio	0.1053972703%
OH1707	Springfield Township, Jefferson County, Ohio	0.0002231349%
OH1708	Springfield Township, Lucas County, Ohio	0.0432543386%
OH1709	Springfield Township, Mahoning County, Ohio	0.0039675747%
OH1710	Springfield Township, Richland County, Ohio	0.0177162881%
OH1711	Springfield Township, Ross County, Ohio	0.0053121351%
OH1712	Springfield Township, Summit County, Ohio	0.0469667767%
OH1713	Springfield Township, Williams County, Ohio	0.0004950504%
OH1714	St Albans Township, Ohio	0.0043369348%
OH1715	St Clair Township, Butler County, Ohio	0.0005493458%
OH1716	St Clair Township, Columbiana County, Ohio	0.0167991211%
OH1717	St Marys Township, Ohio	0.0002136628%
OH1718	St. Bernard Village, Ohio	0.0379854367%
OH1719	St. Clairsville City, Ohio	0.0187569954%
OH1720	St. Henry Village, Ohio	0.0014076956%
OH1721	St. Louisville Village, Ohio	0.0003799451%
OH1722	St. Marys City, Ohio	0.0281144576%
OH1723	St. Paris Village, Ohio	0.0038066155%
OH1724	Stafford Village, Ohio	0.0000249362%
OH1725	Stark County, Ohio	1.5315796664%
OH1726	Starr Township, Ohio	0.0001436692%
OH1727	Staunton Township, Ohio	0.0003747763%
OH1728	Sterling Township, Ohio	0.0043408795%
OH1729	Steubenville City, Ohio	0.1367338744%
OH1730	Steubenville Township, Ohio	0.0000318764%
OH1731	Stock Township, Harrison County, Ohio	0.0003339830%
OH1732	Stock Township, Noble County, Ohio	0.0000344955%
OH1733	Stockport Village, Ohio	0.0002249256%
OH1734	Stokes Township, Logan County, Ohio	0.0047782092%
OH1735	Stokes Township, Madison County, Ohio	0.0007615846%
OH1736	Stone Creek Village, Ohio	0.0001379503%

State ID	Qualifying Subdivision	Consolidated State Allocation
OH1737	Stonelick Township, Ohio	0.0184280231%
OH1738	Stoutsville Village, Ohio	0.0000733307%
OH1739	Stow City, Ohio	0.1475892163%
OH1740	Strasburg Village, Ohio	0.0032911011%
OH1741	Stratton Village, Ohio	0.0014981914%
OH1742	Streetsboro City, Ohio	0.0206045399%
OH1743	Strongsville City, Ohio	0.0739396664%
OH1744	Struthers City, Ohio	0.0252671862%
OH1745	Stryker Village, Ohio	0.0016737417%
OH1746	Suffield Township, Ohio	0.0026771277%
OH1747	Sugar Bush Knolls Village, Ohio	0.0000982645%
OH1748	Sugar Creek Township, Allen County, Ohio	0.0002727166%
OH1749	Sugar Creek Township, Putnam County, Ohio	0.0001655674%
OH1750	Sugar Creek Township, Wayne County, Ohio	0.0003634054%
OH1751	Sugar Grove Village, Ohio	0.0001955486%
OH1752	Sugarcreek Township, Ohio	0.0470017417%
OH1753	Sugarcreek Village, Ohio	0.0027688605%
OH1754	Sullivan Township, Ohio	0.0017162492%
OH1755	Summerfield Village, Ohio	0.0001212800%
OH1756	Summit Township, Ohio	0.0000062341%
OH1757	Summitville Village, Ohio	0.0004792142%
OH1758	Sunbury Village, Ohio	0.0082323543%
OH1759	Sunfish Township, Ohio	0.0000676034%
OH1760	Swan Creek Township, Ohio	0.0048429959%
OH1761	Swanton Township, Ohio	0.0015012549%
OH1762	Swanton Village, Ohio	0.0072434936%
OH1763	Switzerland Township, Ohio	0.0001807876%
OH1764	Sycamore Township, Hamilton County, Ohio	0.0584269292%
OH1765	Sycamore Township, Wyandot County, Ohio	0.0002766058%
OH1766	Sycamore Village, Ohio	0.0012008738%
OH1767	Sylvania City, Ohio	0.0526622027%
OH1768	Sylvania Township, Ohio	0.1247952267%
OH1769	Symmes Township, Hamilton County, Ohio	0.0305202839%
OH1770	Symmes Township, Lawrence County, Ohio	0.0000521565%
OH1771	Syracuse Village, Ohio	0.0005413001%
OH1772	Tallmadge City, Ohio	0.0580737905%
OH1773	Tarlton Village, Ohio	0.0002242634%
OH1774	Tate Township, Ohio	0.0267197716%
OH1775	Taylor Creek Township, Ohio	0.0001110677%
OH1776	Terrace Park Village, Ohio	0.0056698421%
OH1777	Texas Township, Ohio	0.0002936562%

State ID	Qualifying Subdivision	Consolidated State Allocation
OH1778	The Village of Indian Hill City, Ohio	0.0264202950%
OH1779	Thompson Township, Delaware County, Ohio	0.0002474656%
OH1780	Thompson Township, Geauga County, Ohio	0.0022491568%
OH1781	Thorn Township, Ohio	0.0007422882%
OH1782	Thornville Village, Ohio	0.0006131946%
OH1783	Thurston Village, Ohio	0.0013688400%
OH1784	Tiffin City, Ohio	0.0703803061%
OH1785	Tiffin Township, Ohio	0.0005075927%
OH1786	Tiltonsville Village, Ohio	0.0016575735%
OH1787	Timberlake Village, Ohio	0.0023312243%
OH1788	Tipp City, Ohio	0.0376479790%
OH1789	Tiro Village, Ohio	0.0000326285%
OH1790	Toledo City, Ohio	1.0197706186%
OH1791	Tontogany Village, Ohio	0.0001897924%
OH1792	Toronto City, Ohio	0.0279077997%
OH1793	Townsend Township, Huron County, Ohio	0.0006177098%
OH1794	Townsend Township, Sandusky County, Ohio	0.0000271274%
OH1795	Tremont City Village, Ohio	0.0006396354%
OH1796	Trenton City, Ohio	0.0416371797%
OH1797	Trenton Township, Ohio	0.0000577420%
OH1798	Trimble Township, Ohio	0.0023032365%
OH1799	Trimble Village, Ohio	0.0004320101%
OH1800	Trotwood City, Ohio	0.0811683100%
OH1801	Troy City, Ohio	0.0899917302%
OH1802	Troy Township, Ashland County, Ohio	0.0002358826%
OH1803	Troy Township, Athens County, Ohio	0.0008754383%
OH1804	Troy Township, Geauga County, Ohio	0.0026032794%
OH1805	Troy Township, Richland County, Ohio	0.0034790294%
OH1806	Troy Township, Wood County, Ohio	0.0027734180%
OH1807	Trumbull County, Ohio	2.0203599712%
OH1808	Trumbull Township, Ohio	0.0006457459%
OH1809	Truro Township, Ohio	0.0493339720%
OH1810	Tully Township, Ohio	0.0007929647%
OH1811	Turtle Creek Township, Ohio	0.0003372090%
OH1812	Turtlecreek Township, Ohio	0.0071325956%
OH1813	Tuscarawas County, Ohio	0.3721703206%
OH1814	Tuscarawas Township, Ohio	0.0020979323%
OH1815	Tuscarawas Village, Ohio	0.0003842902%

State ID	Qualifying Subdivision	Consolidated State Allocation
OH1816	Twin Township, Darke County, Ohio	0.0003813690%
OH1817	Twin Township, Ross County, Ohio	0.0052531114%
OH1818	Twinsburg City, Ohio	0.0833508485%
OH1819	Tymochtee Township, Ohio	0.0003170847%
OH1820	Uhrichsville City, Ohio	0.0101787647%
OH1821	Union City Village, Ohio	0.0076150778%
OH1822	Union City, Ohio	0.0198982889%
OH1823	Union County, Ohio	0.3002174205%
OH1824	Union Township, Auglaize County, Ohio	0.0001691497%
OH1825	Union Township, Carroll County, Ohio	0.0000762536%
OH1826	Union Township, Champaign County, Ohio	0.0000211479%
OH1827	Union Township, Clermont County, Ohio	0.3185341547%
OH1828	Union Township, Clinton County, Ohio	0.0085869431%
OH1829	Union Township, Fayette County, Ohio	0.0014043033%
OH1830	Union Township, Highland County, Ohio	0.0112248527%
OH1831	Union Township, Lawrence County, Ohio	0.0011822137%
OH1832	Union Township, Licking County, Ohio	0.0076823054%
OH1833	Union Township, Logan County, Ohio	0.0001197046%
OH1834	Union Township, Mercer County, Ohio	0.0004692319%
OH1835	Union Township, Miami County, Ohio	0.0038499743%
OH1836	Union Township, Muskingum County, Ohio	0.0003209896%
OH1837	Union Township, Pike County, Ohio	0.0001098555%
OH1838	Union Township, Ross County, Ohio	0.0119227921%
OH1839	Union Township, Tuscarawas County, Ohio	0.0002167791%
OH1840	Union Township, Union County, Ohio	0.0002502189%
OH1841	Union Township, Van Wert County, Ohio	0.0002973617%
OH1842	Union Township, Warren County, Ohio	0.0079936267%
OH1843	Unionville Center Village, Ohio	0.0001475046%

State ID	Qualifying Subdivision	Consolidated State Allocation
OH1844	Uniopolis Village, Ohio	0.0002492732%
OH1845	Unity Township, Ohio	0.0000798690%
OH1846	University Heights City, Ohio	0.0306916388%
OH1847	Upper Arlington City, Ohio	0.1198448950%
OH1848	Upper Sandusky City, Ohio	0.0108550896%
OH1849	Upper Township, Ohio	0.0007475763%
OH1850	Urbana City, Ohio	0.0575116162%
OH1851	Urbancrest Village, Ohio	0.0003436577%
OH1852	Utica Village, Ohio	0.0044986588%
OH1853	Valley Hi Village, Ohio	0.0001316045%
OH1854	Valley Township, Guernsey County, Ohio	0.0005439160%
OH1855	Valley Township, Scioto County, Ohio	0.0018196842%
OH1856	Valley View Village, Ohio	0.0158831601%
OH1857	Valleyview Village, Ohio	0.0016037359%
OH1858	Van Buren Township, Darke County, Ohio	0.0003444623%
OH1859	Van Buren Township, Putnam County, Ohio	0.0002317943%
OH1860	Van Buren Township, Shelby County, Ohio	0.0003904525%
OH1861	Van Buren Village, Ohio	0.0001188906%
OH1862	Van Wert City, Ohio	0.0528808311%
OH1863	Van Wert County, Ohio	0.1122540604%
OH1864	Vandalia City, Ohio	0.0967305650%
OH1865	Vanlue Village, Ohio	0.0001114793%
OH1866	Venedocia Village, Ohio	0.0000371702%
OH1867	Venice Township, Ohio	0.0000100271%
OH1868	Vermilion City, Ohio	0.0432196320%
OH1869	Vermilion Township, Ohio	0.0012778552%
OH1870	Vermillion Township, Ohio	0.0004880329%
OH1871	Vernon Township, Crawford County, Ohio	0.0000108762%
OH1872	Vernon Township, Scioto County, Ohio	0.0038952614%
OH1873	Vernon Township, Trumbull County, Ohio	0.0006308563%
OH1874	Verona Village, Ohio	0.0012373333%
OH1875	Versailles Village, Ohio	0.0100017096%
OH1876	Vienna Township, Ohio	0.0042113922%
OH1877	Vinton County, Ohio	0.1090168446%
OH1878	Vinton Township, Ohio	0.0001170406%
OH1879	Vinton Village, Ohio	0.0005060807%
OH1880	Violet Township, Ohio	0.0621844457%
OH1881	Virginia Township, Ohio	0.0000841915%
OH1882	Wabash Township, Ohio	0.0000492089%
OH1883	Wadsworth City, Ohio	0.0760959559%
OH1884	Waite Hill Village, Ohio	0.0053068521%

State ID	Qualifying Subdivision	Consolidated State Allocation
OH1885	Wakeman Village, Ohio	0.0018119487%
OH1886	Walbridge Village, Ohio	0.0029019871%
OH1887	Waldo Township, Ohio	0.0000743838%
OH1888	Waldo Village, Ohio	0.0004160980%
OH1889	Walnut Township, Fairfield County, Ohio	0.0087100593%
OH1890	Walnut Township, Gallia County, Ohio	0.0001499498%
OH1891	Walton Hills Village, Ohio	0.0099526568%
OH1892	Wapakoneta City, Ohio	0.0275268850%
OH1893	Ward Township, Ohio	0.0001486233%
OH1894	Warren City, Ohio	0.3520178232%
OH1895	Warren County, Ohio	1.0504230532%
OH1896	Warren Township, Belmont County, Ohio	0.0000984250%
OH1897	Warren Township, Jefferson County, Ohio	0.0004303316%
OH1898	Warren Township, Trumbull County, Ohio	0.0001534515%
OH1899	Warren Township, Tuscarawas County, Ohio	0.0002069255%
OH1900	Warren Township, Washington County, Ohio	0.0008773149%
OH1901	Warrensville Heights City, Ohio	0.0361164097%
OH1902	Warsaw Village, Ohio	0.0003911414%
OH1903	Warwick Township, Ohio	0.0008474093%
OH1904	Washington County, Ohio	0.3325608246%
OH1905	Washington Court House City, Ohio	0.0376016242%
OH1906	Washington Township, Auglaize County, Ohio	0.0023680955%
OH1907	Washington Township, Belmont County, Ohio	0.0000843643%
OH1908	Washington Township, Brown County, Ohio	0.0011782387%
OH1909	Washington Township, Carroll County, Ohio	0.0002178675%
OH1910	Washington Township, Clermont County, Ohio	0.0305984481%
OH1911	Washington Township, Clinton County, Ohio	0.0029440948%
OH1912	Washington Township, Columbiana County, Ohio	0.0006256408%
OH1913	Washington Township, Coshocton County, Ohio	0.0000841915%
OH1914	Washington Township, Darke County, Ohio	0.0003198579%
OH1915	Washington Township, Defiance County, Ohio	0.0003531079%

State ID	Qualifying Subdivision	Consolidated State Allocation
OH1916	Washington Township, Franklin County, Ohio	0.1225330619%
OH1917	Washington Township, Guernsey County, Ohio	0.0000951853%
OH1918	Washington Township, Hancock County, Ohio	0.0008925122%
OH1919	Washington Township, Harrison County, Ohio	0.0003339830%
OH1920	Washington Township, Henry County, Ohio	0.0002571801%
OH1921	Washington Township, Highland County, Ohio	0.0004065339%
OH1922	Washington Township, Hocking County, Ohio	0.0002427514%
OH1923	Washington Township, Holmes County, Ohio	0.0000261741%
OH1924	Washington Township, Jackson County, Ohio	0.0003315132%
OH1925	Washington Township, Lawrence County, Ohio	0.0000695420%
OH1926	Washington Township, Licking County, Ohio	0.0008154920%
OH1927	Washington Township, Logan County, Ohio	0.0017756185%
OH1928	Washington Township, Lucas County, Ohio	0.0071150384%
OH1929	Washington Township, Mercer County, Ohio	0.0001173080%
OH1930	Washington Township, Miami County, Ohio	0.0009766897%
OH1931	Washington Township, Monroe County, Ohio	0.0000062341%
OH1932	Washington Township, Montgomery County, Ohio	0.1316317394%
OH1933	Washington Township, Morrow County, Ohio	0.0002420690%
OH1934	Washington Township, Muskingum County, Ohio	0.0014845767%
OH1935	Washington Township, Paulding County, Ohio	0.0000402008%
OH1936	Washington Township, Pickaway County, Ohio	0.0003983733%
OH1937	Washington Township, Preble County, Ohio	0.0006874604%
OH1938	Washington Township, Richland County, Ohio	0.0012132000%
OH1939	Washington Township, Sandusky County, Ohio	0.0006510581%

State ID	Qualifying Subdivision	Consolidated State Allocation
OH1940	Washington Township, Scioto County, Ohio	0.0113445935%
OH1941	Washington Township, Shelby County, Ohio	0.0000798653%
OH1942	Washington Township, Stark County, Ohio	0.0006531299%
OH1943	Washington Township, Wood County, Ohio	0.0002265264%
OH1944	Washingtonville Village, Ohio	0.0014015930%
OH1945	Waterford Township, Ohio	0.0050048725%
OH1946	Waterloo Township, Ohio	0.0006670006%
OH1947	Watertown Township, Ohio	0.0001503968%
OH1948	Waterville City, Ohio	0.0124831621%
OH1949	Waterville Township, Ohio	0.0015558460%
OH1950	Wauseon City, Ohio	0.0277126990%
OH1951	Waverly Village, Ohio	0.0077490360%
OH1952	Wayne County, Ohio	0.2257675097%
OH1953	Wayne Lakes Village, Ohio	0.0075166600%
OH1954	Wayne Township, Adams County, Ohio	0.0012649279%
OH1955	Wayne Township, Ashtabula County, Ohio	0.0005165967%
OH1956	Wayne Township, Auglaize County, Ohio	0.0004273255%
OH1957	Wayne Township, Belmont County, Ohio	0.0000562429%
OH1958	Wayne Township, Butler County, Ohio	0.0007432325%
OH1959	Wayne Township, Champaign County, Ohio	0.0014909244%
OH1960	Wayne Township, Clermont County, Ohio	0.0020513889%
OH1961	Wayne Township, Clinton County, Ohio	0.0002007337%
OH1962	Wayne Township, Columbiana County, Ohio	0.0005990178%
OH1963	Wayne Township, Darke County, Ohio	0.0000369067%
OH1964	Wayne Township, Fayette County, Ohio	0.0001404303%
OH1965	Wayne Township, Jefferson County, Ohio	0.0021038433%
OH1966	Wayne Township, Monroe County, Ohio	0.0000062341%
OH1967	Wayne Township, Muskingum County, Ohio	0.0001404329%
OH1968	Wayne Township, Noble County, Ohio	0.0000862387%

State ID	Qualifying Subdivision	Consolidated State Allocation
OH1969	Wayne Township, Pickaway County, Ohio	0.0000437239%
OH1970	Wayne Township, Tuscarawas County, Ohio	0.0003941438%
OH1971	Wayne Township, Warren County, Ohio	0.0038164622%
OH1972	Wayne Village, Ohio	0.0008081483%
OH1973	Waynesburg Village, Ohio	0.0012073007%
OH1974	Waynesfield Village, Ohio	0.0007567223%
OH1975	Waynesville Village, Ohio	0.0046309511%
OH1976	Weathersfield Township, Ohio	0.0249955502%
OH1977	Weller Township, Ohio	0.0004460294%
OH1978	Wellington Village, Ohio	0.0164981765%
OH1979	Wells Township, Ohio	0.0100888848%
OH1980	Wellston City, Ohio	0.0406103723%
OH1981	Wellsville Village, Ohio	0.0125660620%
OH1982	Wesley Township, Ohio	0.0001253307%
OH1983	West Alexandria Village, Ohio	0.0099845432%
OH1984	West Carrollton City, Ohio	0.0603546931%
OH1985	West Chester Township, Ohio	0.3737167118%
OH1986	West Elkton Village, Ohio	0.0026843690%
OH1987	West Farmington Village, Ohio	0.0001875519%
OH1988	West Jefferson Village, Ohio	0.0159155640%
OH1989	West Lafayette Village, Ohio	0.0026252451%
OH1990	West Leipsic Village, Ohio	0.0002152376%
OH1991	West Liberty Village, Ohio	0.0035013600%
OH1992	West Manchester Village, Ohio	0.0025206880%
OH1993	West Mansfield Village, Ohio	0.0000798031%
OH1994	West Millgrove Village, Ohio	0.0001102020%
OH1995	West Milton Village, Ohio	0.0098350376%
OH1996	West Rushville Village, Ohio	0.0001070525%
OH1997	West Salem Village, Ohio	0.0004987159%
OH1998	West Township, Ohio	0.0005857063%
OH1999	West Union Village, Ohio	0.0111998820%
OH2000	West Unity Village, Ohio	0.0014694352%
OH2001	Westerville City, Ohio	0.2122517954%
OH2002	Westfield Center Village, Ohio	0.0015469538%
OH2003	Westfield Township, Ohio	0.0022200558%
OH2004	Westlake City, Ohio	0.0470647273%
OH2005	Westland Township, Ohio	0.0000407937%
OH2006	Weston Township, Ohio	0.0001040797%
OH2007	Weston Village, Ohio	0.0009305950%
OH2008	Wharton Village, Ohio	0.0000269859%
OH2009	Wheeling Township, Belmont County, Ohio	0.0005343072%
OH2010	Wheeling Township, Guernsey County, Ohio	0.0000407937%
OH2011	Whetstone Township, Ohio	0.0003262846%
OH2012	White Eyes Township, Ohio	0.0001913444%

State ID	Qualifying Subdivision	Consolidated State Allocation
OH2013	Whitehall City, Ohio	0.0708163966%
OH2014	Whitehouse Village, Ohio	0.0191159792%
OH2015	Whitewater Township, Ohio	0.0072647461%
OH2016	Wickliffe City, Ohio	0.0543194216%
OH2017	Wilkesville Township, Ohio	0.0005461896%
OH2018	Wilkesville Village, Ohio	0.0001034151%
OH2019	Willard City, Ohio	0.0338504955%
OH2020	Williams County, Ohio	0.1507467614%
OH2021	Williamsburg Township, Ohio	0.0138253270%
OH2022	Williamsburg Village, Ohio	0.0064127452%
OH2023	Williamsfield Township, Ohio	0.0004696334%
OH2024	Williamsport Village, Ohio	0.0004226644%
OH2025	Willoughby City, Ohio	0.1356374532%
OH2026	Willoughby Hills City, Ohio	0.0528410843%
OH2027	Willowick City, Ohio	0.0540256495%
OH2028	Wills Township, Ohio	0.0001087832%
OH2029	Willshire Village, Ohio	0.0006690639%
OH2030	Wilmington City, Ohio	0.1278227818%
OH2031	Wilmot Village, Ohio	0.0024343932%
OH2032	Wilson Township, Ohio	0.0006914162%
OH2033	Wilson Village, Ohio	0.0001415832%
OH2034	Winchester Village, Ohio	0.0033994936%
OH2035	Windham Township, Ohio	0.0001218723%
OH2036	Windham Village, Ohio	0.0030305573%
OH2037	Windsor Township, Ashtabula County, Ohio	0.0006340051%
OH2038	Windsor Township, Lawrence County, Ohio	0.0007128053%
OH2039	Windsor Township, Morgan County, Ohio	0.0004926943%
OH2040	Wintersville Village, Ohio	0.0169582518%
OH2041	Wood County, Ohio	0.6017827347%
OH2042	Woodlawn Village, Ohio	0.0240822158%
OH2043	Woodmere Village, Ohio	0.0007072352%
OH2044	Woodsfield Village, Ohio	0.0011221301%
OH2045	Woodstock Village, Ohio	0.0001517571%
OH2046	Woodville Township, Ohio	0.0019622167%
OH2047	Woodville Village, Ohio	0.0034270973%
OH2048	Wooster City, Ohio	0.4046402646%
OH2049	Wooster Township, Ohio	0.0017358405%
OH2050	Worthington City, Ohio	0.0819890902%
OH2051	Worthington Township, Ohio	0.0017573559%
OH2052	Wren Village, Ohio	0.0008301349%
OH2053	Wyandot County, Ohio	0.0959147354%
OH2054	Wyoming City, Ohio	0.0220280462%
OH2055	Xenia City, Ohio	0.1268376308%
OH2056	Xenia Township, Ohio	0.0075532986%
OH2057	Yankee Lake Village, Ohio	0.0000341003%
OH2058	Yellow Creek Township, Ohio	0.0010782320%

State ID	Qualifying Subdivision	Consolidated State Allocation
OH2059	Yellow Springs Village, Ohio	0.0142295064%
OH2060	York Township, Athens County, Ohio	0.0005523599%
OH2061	York Township, Fulton County, Ohio	0.0061882726%
OH2062	York Township, Medina County, Ohio	0.0023145263%
OH2063	York Township, Sandusky County, Ohio	0.0006239306%
OH2064	York Township, Tuscarawas County, Ohio	0.0007784341%
OH2065	York Township, Van Wert County, Ohio	0.0001115107%
OH2066	Yorkshire Village, Ohio	0.0007627380%
OH2067	Yorkville Village, Ohio	0.0011795516%
OH2068	Youngstown City, Ohio	0.5751891038%
OH2069	Zaleski Village, Ohio	0.0000780271%
OH2070	Zane Township, Ohio	0.0012568985%
OH2071	Zanesfield Village, Ohio	0.0001257699%
OH2072	Zanesville City, Ohio	0.1371227251%
OH2073	Zoar Village, Ohio	0.0002364863%

State ID	Qualifying Subdivision	Consolidated State Allocation
OK1	Ada City, Oklahoma	0.8751127538%
OK2	Adair County, Oklahoma	0.4266209709%
OK3	Alfalfa County, Oklahoma	0.0752358760%
OK4	Altus City, Oklahoma	0.0622184471%
OK5	Anadarko City, Oklahoma	0.2177062552%
OK6	Ardmore City, Oklahoma	0.8834203994%
OK7	Atoka County, Oklahoma	0.3570166411%
OK8	Bartlesville City, Oklahoma	0.7616370548%
OK9	Beaver County, Oklahoma	0.0784743727%
OK10	Beckham County, Oklahoma	0.2846460130%
OK11	Bethany City, Oklahoma	0.2482441625%
OK12	Bixby City, Oklahoma	0.2557077913%
OK13	Blaine County, Oklahoma	0.1909298641%
OK14	Broken Arrow City, Oklahoma	1.9405732012%
OK15	Bryan County, Oklahoma	0.5253079080%
OK16	Burns Flat Town, Oklahoma	0.0297825750%
OK17	Caddo County, Oklahoma	0.4845736458%
OK18	Canadian County, Oklahoma	0.5808839408%
OK19	Carter County, Oklahoma	1.0204659663%
OK20	Cherokee County, Oklahoma	0.0547155245%
OK21	Chickasha City, Oklahoma	0.1510124411%
OK22	Choctaw City, Oklahoma	0.0613538158%
OK23	Choctaw County, Oklahoma	0.4004199348%
OK24	Cimarron County, Oklahoma	0.0722904419%
OK25	Claremore City, Oklahoma	0.7190775254%
OK26	Cleveland County, Oklahoma	0.2725422694%
OK27	Coal County, Oklahoma	0.1610866236%
OK28	Comanche County, Oklahoma	2.0790341012%
OK29	Cotton County, Oklahoma	0.1077265239%
OK30	Coweta City, Oklahoma	0.3910652406%
OK31	Craig County, Oklahoma	0.2892248732%
OK32	Creek County, Oklahoma	1.2474865281%
OK33	Custer County, Oklahoma	0.4049880250%
OK34	Del City, Oklahoma	0.2643825434%
OK35	Delaware County, Oklahoma	0.8410533842%
OK36	Dewey County, Oklahoma	0.0676712782%
OK37	Duncan City, Oklahoma	0.8937861298%
OK38	Durant City, Oklahoma	0.7336303563%
OK39	Edmond City, Oklahoma	1.4615935748%
OK40	El Reno City, Oklahoma	0.2053992273%
OK41	Elk City, Oklahoma	0.3587477547%
OK42	Ellis County, Oklahoma	0.0583375351%
OK43	Enid City, Oklahoma	0.7392412881%
OK44	Garfield County, Oklahoma	0.2542221165%
OK45	Garvin County, Oklahoma	0.8411004189%
OK46	Glenpool City, Oklahoma	0.1608895657%
OK47	Grady County, Oklahoma	1.0545977812%
OK48	Grant County, Oklahoma	0.0405478903%
OK49	Greer County, Oklahoma	0.1583252054%

State ID	Qualifying Subdivision	Consolidated State Allocation
OK50	Guthrie City, Oklahoma	0.1856265512%
OK51	Guymon City, Oklahoma	0.0547591936%
OK52	Harmon County, Oklahoma	0.0673861249%
OK53	Harper County, Oklahoma	0.0522026584%
OK54	Haskell County, Oklahoma	0.2531508354%
OK55	Hughes County, Oklahoma	0.2061436213%
OK56	Jackson County, Oklahoma	0.4801048418%
OK57	Jefferson County, Oklahoma	0.3090924602%
OK58	Jenks City, Oklahoma	0.1806228639%
OK59	Johnston County, Oklahoma	0.4472082986%
OK60	Kay County, Oklahoma	0.5067583031%
OK61	Kingfisher County, Oklahoma	0.2717757463%
OK62	Kiowa County, Oklahoma	0.2298382701%
OK63	Latimer County, Oklahoma	0.3148762172%
OK64	Lawton City, Oklahoma	0.3312681144%
OK65	Le Flore County, Oklahoma	1.4166392289%
OK66	Lincoln County, Oklahoma	0.6999457500%
OK67	Logan County, Oklahoma	0.5399784520%
OK68	Love County, Oklahoma	0.2288662752%
OK69	Major County, Oklahoma	0.0852741304%
OK70	Marshall County, Oklahoma	0.2609426135%
OK71	Mayes County, Oklahoma	1.2431623622%
OK72	McAlester City, Oklahoma	1.2318612380%
OK73	McClain County, Oklahoma	0.6643227071%
OK74	McCurtain County, Oklahoma	0.8951427325%
OK75	McIntosh County, Oklahoma	0.6473819592%
OK76	Miami City, Oklahoma	0.3080134381%
OK77	Midwest City, Oklahoma	1.3662006673%
OK78	Moore City, Oklahoma	0.2533704430%
OK79	Murray County, Oklahoma	0.5297956437%
OK80	Muskogee City, Oklahoma	2.5039385148%
OK81	Muskogee County, Oklahoma	0.1783839604%
OK82	Mustang City, Oklahoma	0.1655020823%
OK83	Newcastle City, Oklahoma	0.2606099206%
OK84	Noble County, Oklahoma	0.1688783176%
OK85	Norman City, Oklahoma	4.4189589851%
OK86	Nowata County, Oklahoma	0.1569775216%
OK87	Okfuskee County, Oklahoma	0.2609296558%
OK88	Oklahoma City, Oklahoma	14.3489114350%
OK89	Oklahoma County, Oklahoma	3.3422940072%
OK90	Okmulgee City, Oklahoma	0.5086746948%
OK91	Okmulgee County, Oklahoma	0.4742639531%
OK92	Osage County, Oklahoma	0.5896618496%
OK93	Ottawa County, Oklahoma	0.3159777890%
OK94	Owasso City, Oklahoma	0.7456266521%
OK95	Pawnee County, Oklahoma	0.6201145221%
OK96	Payne County, Oklahoma	0.6719554590%
OK97	Pittsburg County, Oklahoma	0.1253496540%
OK98	Ponca City, Oklahoma	0.4343605817%

State ID	Qualifying Subdivision	Consolidated State Allocation
OK99	Pontotoc County, Oklahoma	0.3451006157%
OK100	Pottawatomie County, Oklahoma	0.8536612997%
OK101	Pushmataha County, Oklahoma	0.3982344607%
OK102	Roger Mills County, Oklahoma	0.0439550052%
OK103	Rogers County, Oklahoma	1.2081401690%
OK104	Sand Springs City, Oklahoma	0.3849881687%
OK105	Sapulpa City, Oklahoma	1.1421081226%
OK106	Seminole City, Oklahoma	0.2214634802%
OK107	Seminole County, Oklahoma	0.4144393970%
OK108	Sequoyah County, Oklahoma	1.5345087624%
OK109	Shawnee City, Oklahoma	1.3614784311%
OK110	Stephens County, Oklahoma	0.8246887486%
OK111	Stillwater City, Oklahoma	0.8442351700%
OK112	Tahlequah City, Oklahoma	1.5329176592%
OK113	Texas County, Oklahoma	0.3711376613%
OK114	Tillman County, Oklahoma	0.1988848754%
OK115	Tulsa City, Oklahoma	11.8499277217%
OK116	Tulsa County, Oklahoma	5.3498014970%
OK117	Wagoner County, Oklahoma	0.8686244855%
OK118	Warr Acres City, Oklahoma	0.1616160377%
OK119	Washington County, Oklahoma	0.3936750370%
OK120	Washita County, Oklahoma	0.1931168527%
OK121	Weatherford City, Oklahoma	0.1872773945%
OK122	Woods County, Oklahoma	0.1975804400%
OK123	Woodward City, Oklahoma	0.2327716722%
OK124	Woodward County, Oklahoma	0.1781706634%
OK125	Yukon City, Oklahoma	0.3103071173%

State ID	Qualifying Subdivision	Consolidated State Allocation
OR1	Albany City, Oregon	1.1574421234%
OR2	Ashland City, Oregon	0.5725593238%
OR3	Astoria City, Oregon	0.1859283065%
OR4	Baker County, Oregon	0.4771636205%
OR5	Beaverton City, Oregon	0.9709676029%
OR6	Bend City, Oregon	0.9443519043%
OR7	Benton County, Oregon	1.0219885306%
OR8	Canby City, Oregon	0.1716812437%
OR9	Central Point City, Oregon	0.1718730043%
OR10	Clackamas County, Oregon	7.7713142577%
OR11	Clatsop County, Oregon	1.1423692099%
OR12	Columbia County, Oregon	1.0096699413%
OR13	Coos Bay City, Oregon	0.2538945929%
OR14	Coos County, Oregon	1.5633002470%
OR15	Cornelius City, Oregon	0.0949750265%
OR16	Corvallis City, Oregon	0.6633711425%
OR17	Cottage Grove City, Oregon	0.0910229575%
OR18	Crook County, Oregon	0.3513229911%
OR19	Curry County, Oregon	0.7612961295%
OR20	Dallas City, Oregon	0.1606964683%
OR21	Deschutes County, Oregon	2.2569753600%
OR22	Douglas County, Oregon	2.5689481047%
OR23	Eugene City, Oregon	2.7611039932%
OR24	Forest Grove City, Oregon	0.2522169415%
OR26	Gladstone City, Oregon	0.1181360032%
OR28	Grants Pass City, Oregon	0.8232581895%
OR29	Gresham City, Oregon	0.9831942718%
OR30	Happy Valley City, Oregon	0.0103506009%
OR32	Hermiston City, Oregon	0.1316304314%
OR33	Hillsboro City, Oregon	1.5083519364%
OR34	Hood River County, Oregon	0.3553687498%
OR35	Independence City, Oregon	0.0808970601%
OR36	Jackson County, Oregon	4.0769510640%
OR37	Jefferson County, Oregon	0.3674692915%
OR38	Josephine County, Oregon	1.6536523798%
OR39	Keizer City, Oregon	0.1916558451%
OR40	Klamath County, Oregon	1.2169628601%
OR41	Klamath Falls City, Oregon	0.3209275214%
OR42	La Grande City, Oregon	0.2715648669%
OR44	Lake Oswego City, Oregon	0.6934160342%
OR45	Lane County, Oregon	6.3326808234%
OR46	Lebanon City, Oregon	0.3269345282%
OR47	Lincoln County, Oregon	1.5190343268%
OR48	Linn County, Oregon	1.8185376689%
OR49	Malheur County, Oregon	0.5014027023%
OR50	Marion County, Oregon	4.1636475308%
OR51	McMinnville City, Oregon	0.4803592635%
OR52	Medford City, Oregon	1.5540758598%
OR53	Milwaukie City, Oregon	0.2113647118%

State ID	Qualifying Subdivision	Consolidated State Allocation
OR54	Monmouth City, Oregon	0.0706960930%
OR55	Morrow County, Oregon	0.1351544937%
OR56	Multnomah County, Oregon	13.9643815662%
OR57	Newberg City, Oregon	0.4093257361%
OR58	Newport City, Oregon	0.1908392623%
OR59	Ontario City, Oregon	0.1869780182%
OR60	Oregon City, Oregon	0.2765040475%
OR61	Pendleton City, Oregon	0.3521049458%
OR62	Polk County, Oregon	0.7074299681%
OR63	Portland City, Oregon	8.2736702858%
OR64	Prineville City, Oregon	0.0924861843%
OR65	Redmond City, Oregon	0.1550311086%
OR66	Roseburg City, Oregon	0.6370799877%
OR67	Salem City, Oregon	3.0438221421%
OR68	Sandy City, Oregon	0.0775015682%
OR70	Sherwood City, Oregon	0.1404204928%
OR71	Silverton City, Oregon	0.0775630731%
OR72	Springfield City, Oregon	1.1667234659%
OR73	St. Helens City, Oregon	0.1964453077%
OR74	The Dalles City, Oregon	0.1723418738%
OR75	Tigard City, Oregon	0.5049875956%
OR76	Tillamook County, Oregon	0.9001228870%
OR77	Troutdale City, Oregon	0.0899929610%
OR78	Tualatin City, Oregon	0.1551565618%
OR79	Umatilla County, Oregon	0.9738633884%
OR80	Union County, Oregon	0.4153841374%
OR82	Wasco County, Oregon	0.4116278731%
OR83	Washington County, Oregon	7.2167622210%
OR84	West Linn City, Oregon	0.1600504983%
OR86	Wilsonville City, Oregon	0.1383351396%
OR87	Woodburn City, Oregon	0.2069349266%
OR88	Yamhill County, Oregon	1.4120246444%

State ID	Qualifying Subdivision	Consolidated State Allocation
PA2	Adams County, Pennsylvania	
PA4	Aliquippa City, Pennsylvania	
PA5	Allegheny County, Pennsylvania	
PA6	Allentown City, Pennsylvania	
PA10	Armstrong County, Pennsylvania	
PA13	Beaver County, Pennsylvania	
PA14	Bedford County, Pennsylvania	
PA15	Bensalem Township, Pennsylvania	
PA16	Berks County, Pennsylvania	
PA20	Blair County, Pennsylvania	
PA22	Bradford County, Pennsylvania	
PA23	Bristol Township, Pennsylvania	
PA25	Bucks County, Pennsylvania	
PA27	Butler County, Pennsylvania	
PA30	Cambria County, Pennsylvania	
PA31	Cameron County, Pennsylvania	
PA32	Carbon County, Pennsylvania	
PA36	Centre County, Pennsylvania	
PA40	Chester County, Pennsylvania	
PA42	Clarion County, Pennsylvania	
PA43	Clearfield County, Pennsylvania	
PA44	Clinton County, Pennsylvania	
PA46	Coatesville City, Pennsylvania	Allocations in Pennsylvania will be made in accordance with the Pennsylvania Trust and Allocation Order.
PA49	Columbia County, Pennsylvania	
PA53	Crawford County, Pennsylvania	
PA54	Cumberland County, Pennsylvania	
PA57	Dauphin County, Pennsylvania	
PA58	Delaware County, Pennsylvania	
PA76	Edwardsville Borough, Pennsylvania	
PA79	Elk County, Pennsylvania	
PA84	Erie County, Pennsylvania	
PA85	Exeter Borough, Pennsylvania	
PA90	Fayette County, Pennsylvania	
PA92	Forest County, Pennsylvania	
PA94	Forty Fort Borough, Pennsylvania	
PA96	Franklin County, Pennsylvania	
PA98	Fulton County, Pennsylvania	
PA99	Greene County, Pennsylvania	
PA107	Hanover Township, Luzerne County, Pennsylvania	
PA114	Hazleton City, Pennsylvania	
PA120	Huntingdon County, Pennsylvania	
PA122	Indiana County, Pennsylvania	
PA123	Jefferson County, Pennsylvania	
PA126	Juniata County, Pennsylvania	
PA127	Kingston Borough, Pennsylvania	
PA128	Lackawanna County, Pennsylvania	
PA130	Lancaster County, Pennsylvania	

State ID	Qualifying Subdivision	Consolidated State Allocation
PA134	Lawrence County, Pennsylvania	
PA136	Lebanon County, Pennsylvania	
PA137	Lehigh County, Pennsylvania	
PA141	Lock Haven City, Pennsylvania	
PA147	Lower Makefield Township, Pennsylvania	
PA155	Lower Southampton Township, Pennsylvania	
PA157	Luzerne County, Pennsylvania	
PA158	Lycoming County, Pennsylvania	
PA348	Mahoning Township, Lawrence County, Pennsylvania	
PA164	McKean County, Pennsylvania	
PA167	Mercer County, Pennsylvania	
PA169	Middletown Township, Bucks County, Pennsylvania	
PA171	Mifflin County, Pennsylvania	
PA174	Monroe County, Pennsylvania	
PA176	Montgomery County, Pennsylvania	
PA178	Montour County, Pennsylvania	
PA180	Morrisville Borough, Pennsylvania	Allocations in Pennsylvania will be made in accordance with the Pennsylvania Trust and Allocation Order.
PA187	Nanticoke City, Pennsylvania	
PA190	New Castle City, Pennsylvania	
PA195	Newtown Township, Bucks County, Pennsylvania	
PA197	Norristown Borough, Pennsylvania	
PA205	Northampton County, Pennsylvania	
PA207	Northumberland County, Pennsylvania	
PA213	Perry County, Pennsylvania	
PA215	Philadelphia City, Pennsylvania	
PA217	Pike County, Pennsylvania	
PA219	Pittsburgh City, Pennsylvania	
PA220	Plains Township, Pennsylvania	
PA225	Potter County, Pennsylvania	
PA241	Schuylkill County, Pennsylvania	
PA248	Snyder County, Pennsylvania	
PA249	Somerset County, Pennsylvania	
PA265	Sugar Notch Borough, Pennsylvania	
PA266	Sullivan County, Pennsylvania	
PA267	Susquehanna County, Pennsylvania	
PA270	Tioga County, Pennsylvania	
PA273	Union County, Pennsylvania	

State ID	Qualifying Subdivision	Consolidated State Allocation
PA349	Union Township, Lawrence County, Pennsylvania	
PA290	Venango County, Pennsylvania	
PA350	Wampum Borough, Pennsylvania	
PA291	Warminster Township, Pennsylvania	
PA292	Warren County, Pennsylvania	
PA293	Warrington Township, Bucks County, Pennsylvania	
PA297	Washington County, Pennsylvania	
PA299	Wayne County, Pennsylvania	
PA310	West Norriton Township, Pennsylvania	
PA311	West Pittston Borough, Pennsylvania	
PA313	Westmoreland County, Pennsylvania	
PA320	Wilkes Barre Township, Pennsylvania	
PA321	Wilkes-Barre City, Pennsylvania	
PA327	Wright Township, Pennsylvania	
PA328	Wyoming Borough, Pennsylvania	
PA329	Wyoming County, Pennsylvania	
PA333	York County, Pennsylvania	
PA335	Fairview Township, Luzerne County, Pennsylvania	Allocations in Pennsylvania will be made in accordance with the Pennsylvania Trust and Allocation Order.
PA336	District Attorney of Allegheny County, Pennsylvania	
PA337	District Attorney of Berks County, Pennsylvania	
PA338	District Attorney of Bucks County, Pennsylvania	
PA339	District Attorney of Chester County, Pennsylvania	
PA340	District Attorney of Clearfield County, Pennsylvania	
PA341	District Attorney of Dauphin County, Pennsylvania	
PA342	District Attorney of Delaware County, Pennsylvania	
PA343	District Attorney of Erie County, Pennsylvania	
PA344	District Attorney of Lehigh County, Pennsylvania	
PA345	District Attorney of Northampton County, Pennsylvania	
PA346	District Attorney of Philadelphia County, Pennsylvania	

State ID	Qualifying Subdivision	Consolidated State Allocation
PA347	District Attorney of Westmoreland County, Pennsylvania	Allocations in Pennsylvania will be made in accordance with the Pennsylvania Trust and Allocation Order.
PA351	Southeastern Pennsylvania Transportation Authority, Pennsylvania	

State ID	Qualifying Subdivision	Consolidated State Allocation
PR1	Adjuntas, Puerto Rico	0.4468461493%
PR2	Aguada, Puerto Rico	0.9238661758%
PR3	Aguadilla, Puerto Rico	1.6156167759%
PR4	Aguas Buenas, Puerto Rico	0.7490858028%
PR5	Aibonito, Puerto Rico	0.7959428477%
PR6	Anasco, Puerto Rico	0.5050154853%
PR7	Arecibo, Puerto Rico	1.3074850692%
PR8	Arroyo, Puerto Rico	2.0592191012%
PR9	Barceloneta, Puerto Rico	0.5768569406%
PR10	Barranquitas, Puerto Rico	0.7167107056%
PR11	Bayamon, Puerto Rico	5.7282390971%
PR12	Cabo Rojo, Puerto Rico	1.1570847420%
PR13	Caguas, Puerto Rico	4.7119895861%
PR14	Camuy, Puerto Rico	0.7759381807%
PR15	Canovanas, Puerto Rico	1.0721780377%
PR16	Carolina, Puerto Rico	4.3228006165%
PR17	Catano, Puerto Rico	0.7612066695%
PR18	Cayey, Puerto Rico	1.3596493469%
PR19	Ceiba, Puerto Rico	0.2896687707%
PR20	Ciales, Puerto Rico	0.4533215195%
PR21	Cidra, Puerto Rico	1.1671492158%
PR22	Coamo, Puerto Rico	0.9970822347%
PR23	Comerio, Puerto Rico	0.5268640655%
PR24	Corozal, Puerto Rico	0.8595048594%
PR25	Culebra, Puerto Rico	0.0380175870%
PR26	Dorado, Puerto Rico	0.8970759382%
PR27	Fajardo, Puerto Rico	1.1102770585%
PR28	Florida, Puerto Rico	0.2695408253%
PR29	Guanica, Puerto Rico	0.4269617539%
PR30	Guayama, Puerto Rico	1.3293151076%
PR31	Guayanilla, Puerto Rico	0.4886780984%
PR32	Guaynabo, Puerto Rico	2.3185934725%
PR33	Gurabo, Puerto Rico	0.9866291335%
PR34	Hatillo, Puerto Rico	1.0577790273%
PR35	Hormigueros, Puerto Rico	0.3963005262%
PR36	Humacao, Puerto Rico	1.8829438530%
PR37	Isabela, Puerto Rico	1.0062900243%
PR38	Jayuya, Puerto Rico	0.3757431113%
PR39	Juana Diaz, Puerto Rico	1.7179648597%
PR40	Juncos, Puerto Rico	0.9543672919%
PR41	Lajas, Puerto Rico	0.5633742491%
PR42	Lares, Puerto Rico	0.6852103333%
PR43	Las Marias, Puerto Rico	0.2285582941%
PR44	Las Piedras, Puerto Rico	0.8440153869%
PR45	Loiza, Puerto Rico	0.7971240145%
PR46	Luquillo, Puerto Rico	0.5035020683%
PR47	Manati, Puerto Rico	1.3858134207%
PR48	Maricao, Puerto Rico	0.1311593846%
PR49	Maunabo, Puerto Rico	0.2983734242%

State ID	Qualifying Subdivision	Consolidated State Allocation
PR50	Mayaguez, Puerto Rico	2.7384221211%
PR51	Moca, Puerto Rico	0.9400143856%
PR52	Morovis, Puerto Rico	0.7678286207%
PR53	Naguabo, Puerto Rico	0.6776685553%
PR54	Naranjito, Puerto Rico	0.6713715879%
PR55	Orocovis, Puerto Rico	0.5209419444%
PR56	Patillas, Puerto Rico	0.4307397840%
PR57	Penuelas, Puerto Rico	0.5782731381%
PR58	Ponce, Puerto Rico	5.1762853836%
PR59	Quebradillas, Puerto Rico	0.6086201563%
PR60	Rincon, Puerto Rico	0.3607312171%
PR61	Rio Grande, Puerto Rico	1.2995118170%
PR62	Sabana Grande, Puerto Rico	0.5625075422%
PR63	Salinas, Puerto Rico	0.8069301551%
PR64	San German, Puerto Rico	0.9914753253%
PR65	San Juan, Puerto Rico	13.8003700360%
PR66	San Lorenzo, Puerto Rico	1.0322446251%
PR67	San Sebastian, Puerto Rico	0.9222442638%
PR68	Santa Isabel, Puerto Rico	0.5210354055%
PR69	Toa Alta, Puerto Rico	1.7552873773%
PR70	Toa Baja, Puerto Rico	2.1783919223%
PR71	Trujillo Alto, Puerto Rico	1.9136501824%
PR72	Utuado, Puerto Rico	0.7718304061%
PR73	Vega Alta, Puerto Rico	0.9338331796%
PR74	Vega Baja, Puerto Rico	1.6886509241%
PR75	Vieques, Puerto Rico	0.1979351524%
PR76	Villalba, Puerto Rico	0.5576736281%
PR77	Yabucoa, Puerto Rico	0.8842993409%
PR78	Yauco, Puerto Rico	1.1383015829%

State ID	Qualifying Subdivision	Consolidated State Allocation
RI1	Barrington Town, Rhode Island	2.3000539202%
RI2	Bristol Town, Rhode Island	1.0821868960%
RI3	Burrillville Town, Rhode Island	1.3272036109%
RI4	Central Falls City, Rhode Island	0.9147584689%
RI5	Charlestown, Rhode Island	0.5887860100%
RI6	Coventry Town, Rhode Island	3.5886939036%
RI7	Cranston City, Rhode Island	7.8869595262%
RI8	Cumberland Town, Rhode Island	2.4742003754%
RI9	East Greenwich Town, Rhode Island	1.7467671439%
RI10	East Providence City, Rhode Island	4.3247728580%
RI11	Exeter Town, Rhode Island	0.0071810640%
RI12	Foster Town, Rhode Island	0.2489021533%
RI13	Glocester Town, Rhode Island	0.8508469130%
RI14	Hopkinton Town, Rhode Island	0.7098006614%
RI15	Jamestown, Rhode Island	0.4220295287%
RI16	Johnston Town, Rhode Island	3.0898685140%
RI17	Lincoln Town, Rhode Island	2.1171973520%
RI18	Little Compton Town, Rhode Island	0.2663017745%
RI19	Middletown, Rhode Island	1.2877439601%
RI20	Narragansett Town, Rhode Island	1.2760123800%
RI21	New Shoreham Town, Rhode Island	0.2118269375%
RI22	Newport City, Rhode Island	2.3339316695%
RI23	North Kingstown, Rhode Island	2.6500524514%
RI24	North Providence Town, Rhode Island	2.5306229398%
RI25	North Smithfield Town, Rhode Island	1.1299013506%
RI26	Pawtucket City, Rhode Island	5.9652217345%
RI27	Portsmouth Town, Rhode Island	1.2807429020%
RI28	Providence City, Rhode Island	21.4858080262%
RI29	Richmond Town, Rhode Island	0.0818789542%
RI30	Scituate Town, Rhode Island	1.0248588645%
RI31	Smithfield Town, Rhode Island	1.7724673574%
RI32	South Kingstown, Rhode Island	2.3282747894%
RI33	Tiverton Town, Rhode Island	0.9907730639%
RI34	Warren Town, Rhode Island	0.1394116029%
RI35	Warwick City, Rhode Island	9.9418184427%
RI36	West Greenwich Town, Rhode Island	0.7104734659%
RI37	West Warwick Town, Rhode Island	3.0239943495%
RI38	Westerly Town, Rhode Island	2.0135754535%
RI39	Woonsocket City, Rhode Island	3.8740986306%

State ID	Qualifying Subdivision	Consolidated State Allocation
SC1	Abbeville County, South Carolina	0.3350059823%
SC2	Aiken City, South Carolina	0.7838026892%
SC3	Aiken County, South Carolina	2.5661670597%
SC4	Allendale County, South Carolina	0.1220441823%
SC5	Anderson City, South Carolina	1.1735303052%
SC6	Anderson County, South Carolina	3.3392231904%
SC7	Bamberg County, South Carolina	0.2705913372%
SC8	Barnwell County, South Carolina	0.4653224769%
SC9	Beaufort City, South Carolina	0.0769982478%
SC10	Beaufort County, South Carolina	2.3364418352%
SC11	Berkeley County, South Carolina	2.0961440294%
SC12	Bluffton Town, South Carolina	0.0481968917%
SC13	Calhoun County, South Carolina	0.1833260393%
SC14	Cayce City, South Carolina	0.2572136960%
SC15	Charleston City, South Carolina	2.3004340552%
SC16	Charleston County, South Carolina	3.8016438488%
SC17	Cherokee County, South Carolina	0.9440700745%
SC18	Chester City, South Carolina	0.1299573133%
SC19	Chester County, South Carolina	0.3947965211%
SC20	Chesterfield County, South Carolina	0.9443488664%
SC21	Clarendon County, South Carolina	0.5705383575%
SC22	Clemson City, South Carolina	0.3311616877%
SC23	Colleton County, South Carolina	0.8589365535%
SC24	Columbia City, South Carolina	2.3918060702%
SC25	Conway City, South Carolina	0.2894739402%
SC26	Darlington County, South Carolina	1.6906462867%
SC27	Dillon County, South Carolina	0.6608411417%
SC28	Dorchester County, South Carolina	1.6015765975%
SC29	Easley City, South Carolina	0.8565835771%
SC30	Edgefield County, South Carolina	0.3586097074%
SC31	Fairfield County, South Carolina	0.3536421891%
SC32	Florence City, South Carolina	1.0065336904%
SC33	Florence County, South Carolina	2.2059006272%
SC34	Forest Acres City, South Carolina	0.0995929056%
SC35	Fort Mill Town, South Carolina	0.1714974802%
SC36	Fountain Inn City, South Carolina	0.1975697094%
SC37	Gaffney City, South Carolina	0.2044353782%
SC38	Georgetown City, South Carolina	0.2626233562%
SC39	Georgetown County, South Carolina	1.1895098900%
SC40	Goose Creek City, South Carolina	0.5473575768%
SC41	Greenville City, South Carolina	2.2705648395%
SC42	Greenville County, South Carolina	7.1502328364%
SC43	Greenwood City, South Carolina	0.0308220618%
SC44	Greenwood County, South Carolina	1.3388944490%
SC45	Greer City, South Carolina	0.5590564672%

State ID	Qualifying Subdivision	Consolidated State Allocation
SC46	Hampton County, South Carolina	0.3450376919%
SC47	Hanahan City, South Carolina	0.2279684840%
SC48	Hilton Head Island Town, South Carolina	0.2323878458%
SC49	Horry County, South Carolina	5.2166718879%
SC50	Irmo Town, South Carolina	0.0942740906%
SC51	James Island Town, South Carolina	0.0461551887%
SC52	Jasper County, South Carolina	0.4278548317%
SC53	Kershaw County, South Carolina	1.0780892823%
SC54	Lancaster County, South Carolina	1.4809282603%
SC55	Laurens County, South Carolina	1.3598442946%
SC56	Lee County, South Carolina	0.2176621820%
SC57	Lexington County, South Carolina	4.4881391605%
SC58	Lexington Town, South Carolina	0.2342104062%
SC59	Marion County, South Carolina	0.6973242307%
SC60	Marlboro County, South Carolina	0.4878238042%
SC61	Mauldin City, South Carolina	0.4253253929%
SC62	McCormick County, South Carolina	0.1281623493%
SC63	Moncks Corner Town, South Carolina	0.1965426445%
SC64	Mount Pleasant Town, South Carolina	0.5750801889%
SC65	Myrtle Beach City, South Carolina	1.9068234068%
SC66	Newberry City, South Carolina	0.0344864657%
SC67	Newberry County, South Carolina	0.5656551710%
SC68	North Augusta City, South Carolina	0.5139678525%
SC69	North Charleston City, South Carolina	1.7751090959%
SC70	North Myrtle Beach City, South Carolina	0.6366313248%
SC71	Oconee County, South Carolina	2.8099515214%
SC72	Orangeburg City, South Carolina	0.0468940344%
SC73	Orangeburg County, South Carolina	1.4543982912%
SC74	Pickens County, South Carolina	2.8143347165%
SC75	Port Royal Town, South Carolina	0.0206098617%
SC76	Richland County, South Carolina	3.8816723839%
SC77	Rock Hill City, South Carolina	1.3120073555%
SC78	Saluda County, South Carolina	0.2604801809%
SC79	Simpsonville City, South Carolina	0.3497064495%
SC80	Spartanburg City, South Carolina	1.1890308958%
SC81	Spartanburg County, South Carolina	6.4084293395%
SC82	Summerville Town, South Carolina	0.6446011912%
SC83	Sumter City, South Carolina	0.5390642671%

State ID	Qualifying Subdivision	Consolidated State Allocation
SC84	Sumter County, South Carolina	0.9480995733%
SC85	Tega Cay City, South Carolina	0.0433365022%
SC86	Union County, South Carolina	0.6499524020%
SC87	West Columbia City, South Carolina	0.3943858322%
SC88	Williamsburg County, South Carolina	0.4931357629%
SC89	York County, South Carolina	2.5800878865%

State ID	Qualifying Subdivision	Consolidated State Allocation
SD1	Aberdeen City, South Dakota	1.7806789284%
SD2	Aurora County, South Dakota	0.1283252150%
SD3	Beadle County, South Dakota	0.8743032704%
SD4	Bennett County, South Dakota	0.1895703332%
SD5	Bon Homme County, South Dakota	0.6047162426%
SD6	Box Elder City, South Dakota	0.2251076107%
SD7	Brandon City, South Dakota	0.4012895918%
SD8	Brookings City, South Dakota	2.4259611863%
SD9	Brookings County, South Dakota	0.2802421588%
SD10	Brown County, South Dakota	1.7764564315%
SD11	Brule County, South Dakota	0.8045710091%
SD12	Buffalo County, South Dakota	0.1823519926%
SD13	Butte County, South Dakota	0.8926544344%
SD14	Campbell County, South Dakota	0.0682419048%
SD15	Charles Mix County, South Dakota	0.8084433424%
SD16	Clark County, South Dakota	0.2550260601%
SD17	Clay County, South Dakota	0.4415194932%
SD18	Codington County, South Dakota	0.8721266365%
SD19	Corson County, South Dakota	0.3429322421%
SD20	Custer County, South Dakota	1.0868471426%
SD21	Davison County, South Dakota	0.6815458005%
SD22	Day County, South Dakota	0.3921680475%
SD23	Deuel County, South Dakota	0.4035008098%
SD24	Dewey County, South Dakota	0.3699996685%
SD25	Douglas County, South Dakota	0.2891518759%
SD26	Edmunds County, South Dakota	0.2529348056%
SD27	Fall River County, South Dakota	2.1968904590%
SD28	Faulk County, South Dakota	0.2772473959%
SD29	Grant County, South Dakota	0.6923230564%
SD30	Gregory County, South Dakota	0.5555128599%
SD31	Haakon County, South Dakota	0.1774497029%
SD32	Hamlin County, South Dakota	0.3340117176%
SD33	Hand County, South Dakota	0.2401311401%
SD34	Hanson County, South Dakota	0.1484271966%
SD35	Harding County, South Dakota	0.0620805393%
SD36	Hughes County, South Dakota	0.8137066032%
SD37	Huron City, South Dakota	0.8308959590%
SD38	Hutchinson County, South Dakota	0.5659237410%
SD39	Hyde County, South Dakota	0.0640529112%
SD40	Jackson County, South Dakota	0.1437421380%
SD41	Jerauld County, South Dakota	0.3258250234%
SD42	Jones County, South Dakota	0.0451732597%
SD43	Kingsbury County, South Dakota	0.3721763025%
SD44	Lake County, South Dakota	0.8273932428%
SD45	Lawrence County, South Dakota	2.3838237581%
SD46	Lincoln County, South Dakota	1.2611723923%
SD47	Lyman County, South Dakota	0.3239942300%

State ID	Qualifying Subdivision	Consolidated State Allocation
SD48	Marshall County, South Dakota	0.5625107271%
SD49	McCook County, South Dakota	0.3047773840%
SD50	McPherson County, South Dakota	0.1613184030%
SD51	Meade County, South Dakota	3.2698326502%
SD52	Mellette County, South Dakota	0.1848247525%
SD53	Miner County, South Dakota	0.1616739703%
SD54	Minnehaha County, South Dakota	12.2243522517%
SD55	Mitchell City, South Dakota	1.5031732329%
SD56	Moody County, South Dakota	0.4743937985%
SD57	Oglala Lakota County, South Dakota	1.3919692864%
SD58	Pennington County, South Dakota	8.0611767283%
SD59	Perkins County, South Dakota	0.3755374403%
SD60	Pierre City, South Dakota	0.6216678331%
SD61	Potter County, South Dakota	0.1893444561%
SD62	Rapid City, South Dakota	6.9492723574%
SD63	Roberts County, South Dakota	0.9943780269%
SD64	Sanborn County, South Dakota	0.1141857404%
SD65	Sioux Falls City, South Dakota	21.6732660428%
SD66	Spearfish City, South Dakota	0.8208633410%
SD67	Spink County, South Dakota	0.7324773052%
SD68	Stanley County, South Dakota	0.1733882380%
SD69	Sully County, South Dakota	0.0632218131%
SD70	Todd County, South Dakota	1.0677859248%
SD71	Tripp County, South Dakota	0.6252580903%
SD72	Turner County, South Dakota	0.6536969906%
SD73	Union County, South Dakota	1.4531041680%
SD74	Vermillion City, South Dakota	0.5912781760%
SD75	Walworth County, South Dakota	0.5615110318%
SD76	Watertown City, South Dakota	1.6132964277%
SD77	Yankton City, South Dakota	1.2219897393%
SD78	Yankton County, South Dakota	1.4233435084%
SD79	Ziebach County, South Dakota	0.3085103004%

State ID	Qualifying Subdivision	Consolidated State Allocation
TN3	Anderson County, Tennessee	1.2063249026%
TN5	Arlington Town, Tennessee	0.0036566309%
TN8	Bartlett City, Tennessee	0.0730561566%
TN10	Bedford County, Tennessee	0.5762663555%
TN12	Benton County, Tennessee	0.5216608068%
TN13	Bledsoe County, Tennessee	0.1398580820%
TN14	Blount County, Tennessee	1.9196465581%
TN15	Bradley County, Tennessee	1.0430217552%
TN16	Brentwood City, Tennessee	0.0478208600%
TN17	Bristol City, Tennessee	0.5426871150%
TN19	Campbell County, Tennessee	1.5974370559%
TN20	Cannon County, Tennessee	0.3205453949%
TN21	Carroll County, Tennessee	0.4438060785%
TN22	Carter County, Tennessee	0.8435596891%
TN27	Chattanooga City, Tennessee	0.4981237028%
TN28	Cheatham County, Tennessee	0.8209998781%
TN29	Chester County, Tennessee	0.1751399118%
TN30	Claiborne County, Tennessee	1.1929412357%
TN31	Clarksville City, Tennessee	0.2296815192%
TN32	Clay County, Tennessee	0.3261509170%
TN33	Cleveland City, Tennessee	0.5531282252%
TN36	Cocke County, Tennessee	0.8746257470%
TN37	Coffee County, Tennessee	0.8953551698%
TN39	Collierville Town, Tennessee	0.0617375387%
TN41	Columbia City, Tennessee	0.0390894158%
TN42	Cookeville City, Tennessee	0.8404101920%
TN45	Crockett County, Tennessee	0.1232062476%
TN47	Cumberland County, Tennessee	0.8784847959%
TN48	Dandridge Town, Tennessee	0.0109089663%
TN49	De Kalb County, Tennessee	0.4478425886%
TN50	Decatur County, Tennessee	0.3607195939%
TN51	Decatur Town, Tennessee	0.0050599481%
TN53	Dickson County, Tennessee	0.8341347308%
TN56	Dyer County, Tennessee	0.4019088559%
TN64	Fayette County, Tennessee	0.3157083831%
TN66	Fentress County, Tennessee	0.5526714656%
TN67	Franklin City, Tennessee	0.1089989646%
TN68	Franklin County, Tennessee	0.6323371108%
TN69	Gallatin City, Tennessee	0.0760079674%
TN70	Gatlinburg City, Tennessee	0.0507819668%
TN71	Germantown City, Tennessee	0.0687501047%
TN72	Gibson County, Tennessee	0.4940695219%
TN73	Giles County, Tennessee	0.4604367666%
TN75	Grainger County, Tennessee	0.4671260668%
TN76	Greene County, Tennessee	1.2127967101%
TN78	Grundy County, Tennessee	0.3896858892%
TN79	Hamblen County, Tennessee	2.2614488604%
TN80	Hamilton County, Tennessee	4.2055530346%
TN81	Hancock County, Tennessee	0.2089065376%

State ID	Qualifying Subdivision	Consolidated State Allocation
TN82	Hardeman County, Tennessee	0.2150658408%
TN83	Hardin County, Tennessee	0.5683946644%
TN84	Hartsville/Trousdale County, Tennessee	0.1139641522%
TN85	Hawkins County, Tennessee	1.0968095083%
TN86	Haywood County, Tennessee	0.1104263592%
TN87	Henderson County, Tennessee	0.2498867656%
TN88	Hendersonville City, Tennessee	0.1137407554%
TN89	Henry County, Tennessee	0.6661685991%
TN90	Hickman County, Tennessee	0.2804089244%
TN91	Houston County, Tennessee	0.1198735525%
TN92	Humphreys County, Tennessee	0.2441608982%
TN93	Jackson City, Tennessee	0.0431370644%
TN94	Jackson County, Tennessee	0.2780985367%
TN95	Jefferson County, Tennessee	0.8912247367%
TN96	Johnson City, Tennessee	1.0682855260%
TN97	Johnson County, Tennessee	0.2282065978%
TN98	Kingsport City, Tennessee	0.9871149359%
TN99	Knox County, Tennessee	9.1809198144%
TN100	Knoxville City, Tennessee	1.5417816888%
TN101	La Vergne City, Tennessee	0.0518950147%
TN102	Lake County, Tennessee	0.0671464632%
TN104	Lauderdale County, Tennessee	0.2733775153%
TN105	Lawrence County, Tennessee	0.6992850503%
TN107	Lebanon City, Tennessee	0.1110258247%
TN108	Lewis County, Tennessee	0.1528225920%
TN110	Lexington City, Tennessee	0.0796867496%
TN112	Lincoln County, Tennessee	0.4060784411%
TN115	Loudon County, Tennessee	0.8992484296%
TN116	Lynchburg, Moore County Metropolitan Government, Tennessee	0.0579106070%
TN118	Macon County, Tennessee	0.3091017000%
TN119	Madison County, Tennessee	0.8907256845%
TN121	Marion County, Tennessee	0.3637161259%
TN122	Marshall County, Tennessee	0.5422227344%
TN124	Maryville City, Tennessee	0.3223901040%
TN125	Maury County, Tennessee	1.0772540178%
TN126	McMinn County, Tennessee	0.9297273747%
TN128	McNairy County, Tennessee	0.4269884656%
TN129	Meigs County, Tennessee	0.2016450737%
TN130	Memphis City, Tennessee	4.9079216307%
TN131	Millington City, Tennessee	0.0212200583%
TN133	Monroe County, Tennessee	0.7506735593%
TN135	Montgomery County, Tennessee	1.6758545682%
TN136	Morgan County, Tennessee	0.5132562715%
TN138	Morristown City, Tennessee	0.3919462797%
TN139	Mount Juliet City, Tennessee	0.0577622481%
TN141	Murfreesboro City, Tennessee	0.7283549414%

State ID	Qualifying Subdivision	Consolidated State Allocation
TN142	Nashville-Davidson Metropolitan Government, Tennessee	8.9810236006%
TN145	Oak Ridge City, Tennessee	0.9598050011%
TN146	Obion County, Tennessee	0.3198033491%
TN147	Overton County, Tennessee	0.5461670803%
TN149	Perry County, Tennessee	0.0857864664%
TN151	Pickett County, Tennessee	0.1471132648%
TN152	Pigeon Forge City, Tennessee	0.0877322588%
TN154	Polk County, Tennessee	0.3220131560%
TN157	Putnam County, Tennessee	0.3930896023%
TN159	Rhea County, Tennessee	0.5404420504%
TN160	Ripley City, Tennessee	0.0190759934%
TN161	Roane County, Tennessee	1.6361535854%
TN162	Robertson County, Tennessee	0.9333043197%
TN163	Rutherford County, Tennessee	2.5756978154%
TN164	Scott County, Tennessee	0.5189341096%
TN165	Sequatchie County, Tennessee	0.2433974548%
TN166	Sevier County, Tennessee	1.4412782095%
TN168	Shelby County, Tennessee	3.5255489082%
TN170	Smith County, Tennessee	0.5711842980%
TN172	Smyrna Town, Tennessee	0.1314691656%
TN176	Spring Hill City, Tennessee	0.0244598773%
TN179	Stewart County, Tennessee	0.1459273147%
TN180	Sullivan County, Tennessee	1.4573397906%
TN181	Sumner County, Tennessee	1.7449087187%
TN182	Tipton County, Tennessee	0.6312749815%
TN184	Unicoi County, Tennessee	0.3464527663%
TN186	Union County, Tennessee	0.5606745148%
TN187	Van Buren County, Tennessee	0.0479172535%
TN189	Warren County, Tennessee	0.5719112694%
TN191	Washington County, Tennessee	1.1061046159%
TN192	Wayne County, Tennessee	0.2328717594%
TN194	Weakley County, Tennessee	0.3874777573%
TN195	White County, Tennessee	0.4162394991%
TN197	Williamson County, Tennessee	1.6843304984%
TN198	Wilson County, Tennessee	1.4019072760%

State ID	Qualifying Subdivision	Consolidated State Allocation
TX1	Abbott City, Texas	0.0004586670%
TX2	Abernathy City, Texas	0.0000733330%
TX3	Abilene City, Texas	0.3758786670%
TX4	Ackerly City, Texas	0.0000140000%
TX5	Addison Town, Texas	0.0387293330%
TX6	Adrian City, Texas	0.0001206670%
TX7	Agua Dulce City, Texas	0.0000286670%
TX8	Alamo City, Texas	0.0147473330%
TX9	Alamo Heights City, Texas	0.0187986670%
TX10	Alba Town, Texas	0.0021306670%
TX11	Albany City, Texas	0.0001200000%
TX12	Aledo City, Texas	0.0002206670%
TX13	Alice City, Texas	0.0475273330%
TX14	Allen City, Texas	0.2100540000%
TX15	Alma Town, Texas	0.0007380000%
TX16	Alpine City, Texas	0.0197906670%
TX17	Alto Town, Texas	0.0025113330%
TX18	Alton City, Texas	0.0076933330%
TX19	Alvarado City, Texas	0.0193526670%
TX20	Alvin City, Texas	0.0759746670%
TX21	Alvord Town, Texas	0.0002386670%
TX22	Amarillo City, Texas	0.6584406670%
TX23	Ames City, Texas	0.0037140000%
TX24	Amherst City, Texas	0.0000146670%
TX25	Anahuac City, Texas	0.0003613330%
TX26	Anderson City, Texas	0.0000126670%
TX27	Anderson County, Texas	0.1791753330%
TX28	Andrews City, Texas	0.0126553330%
TX29	Andrews County, Texas	0.0250706670%
TX30	Angelina County, Texas	0.1533040000%
TX31	Angleton City, Texas	0.0418606670%
TX32	Angus City, Texas	0.0002206670%
TX33	Anna City, Texas	0.0060500000%
TX34	Annetta North Town, Texas	0.0000226670%
TX35	Annetta South Town, Texas	0.0004013330%
TX36	Annetta Town, Texas	0.0039706670%
TX37	Annona Town, Texas	0.0004920000%
TX38	Anson City, Texas	0.0034226670%
TX39	Anthony Town, Texas	0.0030093330%
TX40	Anton City, Texas	0.0002960000%
TX41	Appleby City, Texas	0.0010340000%
TX42	Aquilla City, Texas	0.0001386670%
TX43	Aransas County, Texas	0.1776746670%
TX44	Aransas Pass City, Texas	0.0385420000%
TX45	Archer City, Texas	0.0070360000%
TX46	Archer County, Texas	0.0303560000%
TX47	Arcola City, Texas	0.0048600000%
TX48	Argyle City, Texas	0.0076040000%
TX49	Arlington City, Texas	0.4905353330%

State ID	Qualifying Subdivision	Consolidated State Allocation
TX50	Armstrong County, Texas	0.0006493330%
TX51	Arp City, Texas	0.0013393330%
TX52	Asherton City, Texas	0.0000746670%
TX53	Aspermont Town, Texas	0.0000060000%
TX54	Atascosa County, Texas	0.1179353330%
TX55	Athens City, Texas	0.0706280000%
TX56	Atlanta City, Texas	0.0206633330%
TX57	Aubrey City, Texas	0.0100940000%
TX58	Aurora City, Texas	0.0012326670%
TX59	Austin City, Texas	3.2518106670%
TX60	Austin County, Texas	0.0506866670%
TX61	Austwell City, Texas	0.0000726670%
TX62	Avery Town, Texas	0.0000920000%
TX63	Avinger Town, Texas	0.0007433330%
TX64	Azle City, Texas	0.0214753330%
TX65	Bailey City, Texas	0.0006333330%
TX66	Bailey County, Texas	0.0102513330%
TX67	Bailey's Prairie Village, Texas	0.0037360000%
TX68	Baird City, Texas	0.0018680000%
TX69	Balch Springs City, Texas	0.0182386670%
TX70	Balcones Heights City, Texas	0.0158740000%
TX71	Ballinger City, Texas	0.0061146670%
TX72	Balmorhea City, Texas	0.0000420000%
TX73	Bandera City, Texas	0.0019286670%
TX74	Bandera County, Texas	0.0578766670%
TX75	Bangs City, Texas	0.0020333330%
TX76	Bardwell City, Texas	0.0002413330%
TX77	Barry City, Texas	0.0001333330%
TX78	Barstow City, Texas	0.0000406670%
TX79	Bartlett City, Texas	0.0022493330%
TX80	Bartonville Town, Texas	0.0059246670%
TX81	Bastrop City, Texas	0.0308800000%
TX82	Bastrop County, Texas	0.2293066670%
TX83	Bay City, Texas	0.0386080000%
TX84	Baylor County, Texas	0.0198880000%
TX85	Bayou Vista City, Texas	0.0041600000%
TX86	Bayside Town, Texas	0.0001613330%
TX87	Baytown City, Texas	0.1440440000%
TX88	Bayview Town, Texas	0.0000273330%
TX89	Beach City, Texas	0.0083366670%
TX90	Bear Creek Village, Texas	0.0006040000%
TX91	Beasley City, Texas	0.0000866670%
TX92	Beaumont City, Texas	0.4553400000%
TX93	Beckville City, Texas	0.0008313330%
TX94	Bedford City, Texas	0.0628760000%
TX95	Bedias City, Texas	0.0023166670%
TX96	Bee Cave City, Texas	0.0085753330%
TX97	Bee County, Texas	0.0652293330%
TX98	Beeville City, Texas	0.0160180000%

State ID	Qualifying Subdivision	Consolidated State Allocation
TX99	Bell County, Texas	0.4338320000%
TX100	Bellaire City, Texas	0.0275093330%
TX101	Bellevue City, Texas	0.0000373330%
TX102	Bellmead City, Texas	0.0096580000%
TX103	Bells Town, Texas	0.0012606670%
TX104	Bellville City, Texas	0.0049920000%
TX105	Belton City, Texas	0.0484533330%
TX106	Benavides City, Texas	0.0001013330%
TX107	Benbrook City, Texas	0.0292793330%
TX108	Benjamin City, Texas	0.0006340000%
TX109	Berryville Town, Texas	0.0095860000%
TX110	Bertram City, Texas	0.0001213330%
TX111	Beverly Hills City, Texas	0.0028906670%
TX112	Bevil Oaks City, Texas	0.0003660000%
TX113	Bexar County, Texas	4.6714346670%
TX114	Big Lake City, Texas	0.0003646670%
TX115	Big Sandy Town, Texas	0.0030526670%
TX116	Big Spring City, Texas	0.1266186670%
TX117	Big Wells City, Texas	0.0001573330%
TX118	Bishop City, Texas	0.0054753330%
TX119	Bishop Hills Town, Texas	0.0002153330%
TX120	Blackwell City, Texas	0.0000206670%
TX121	Blanco City, Texas	0.0041273330%
TX122	Blanco County, Texas	0.0328153330%
TX123	Blanket Town, Texas	0.0000980000%
TX124	Bloomburg Town, Texas	0.0006733330%
TX125	Blooming Grove Town, Texas	0.0002346670%
TX126	Blossom City, Texas	0.0001320000%
TX127	Blue Mound City, Texas	0.0019253330%
TX128	Blue Ridge City, Texas	0.0008966670%
TX129	Blum Town, Texas	0.0010813330%
TX130	Boerne City, Texas	0.0303840000%
TX131	Bogata City, Texas	0.0024326670%
TX132	Bonham City, Texas	0.0672726670%
TX133	Bonney Village, Texas	0.0016733330%
TX134	Booker Town, Texas	0.0006906670%
TX135	Borden County, Texas	0.0006666670%
TX136	Borger City, Texas	0.0464533330%
TX137	Bosque County, Texas	0.0473820000%
TX138	Bovina City, Texas	0.0001153330%
TX139	Bowie City, Texas	0.0557466670%
TX140	Bowie County, Texas	0.1554600000%
TX141	Boyd Town, Texas	0.0046353330%
TX142	Brackettville City, Texas	0.0000053330%
TX143	Brady City, Texas	0.0183200000%
TX144	Brazoria City, Texas	0.0076913330%
TX145	Brazoria County, Texas	0.6807266670%
TX146	Brazos Bend City, Texas	0.0003080000%
TX147	Brazos Country City, Texas	0.0006013330%

State ID	Qualifying Subdivision	Consolidated State Allocation
TX148	Brazos County, Texas	0.2280580000%
TX149	Breckenridge City, Texas	0.0159840000%
TX150	Bremond City, Texas	0.0037026670%
TX151	Brenham City, Texas	0.0365000000%
TX152	Brewster County, Texas	0.0400580000%
TX153	Briarcliff Village, Texas	0.0003813330%
TX154	Briaroaks City, Texas	0.0000380000%
TX155	Bridge City, Texas	0.0538373330%
TX156	Bridgeport City, Texas	0.0222006670%
TX157	Briscoe County, Texas	0.0006513330%
TX158	Broaddus Town, Texas	0.0000206670%
TX159	Bronte Town, Texas	0.0000660000%
TX160	Brooks County, Texas	0.0138066670%
TX161	Brookshire City, Texas	0.0042706670%
TX162	Brookside Village City, Texas	0.0007400000%
TX163	Brown County, Texas	0.1289446670%
TX164	Browndell City, Texas	0.0001013330%
TX165	Brownfield City, Texas	0.0096346670%
TX166	Brownsboro City, Texas	0.0021173330%
TX167	Brownsville City, Texas	0.2833713330%
TX168	Brownwood City, Texas	0.1110480000%
TX169	Bruceville-Eddy City, Texas	0.0011280000%
TX170	Bryan City, Texas	0.1645980000%
TX171	Bryson City, Texas	0.0008186670%
TX172	Buckholts Town, Texas	0.0007420000%
TX173	Buda City, Texas	0.0071893330%
TX174	Buffalo City, Texas	0.0079106670%
TX175	Buffalo Gap Town, Texas	0.0000586670%
TX176	Buffalo Springs Village, Texas	0.0001253330%
TX177	Bullard Town, Texas	0.0049913330%
TX178	Bulverde City, Texas	0.0096240000%
TX179	Bunker Hill Village City, Texas	0.0003146670%
TX180	Burkburnett City, Texas	0.0252293330%
TX181	Burke City, Texas	0.0007426670%
TX182	Burleson City, Texas	0.1011860000%
TX183	Burleson County, Texas	0.0468293330%
TX184	Burnet City, Texas	0.0222300000%
TX185	Burnet County, Texas	0.1265526670%
TX186	Burton City, Texas	0.0006246670%
TX187	Byers City, Texas	0.0000513330%
TX188	Bynum Town, Texas	0.0002533330%
TX189	Cactus City, Texas	0.0031860000%
TX190	Caddo Mills City, Texas	0.0000286670%
TX191	Caldwell City, Texas	0.0121633330%
TX192	Caldwell County, Texas	0.0576086670%
TX193	Calhoun County, Texas	0.0852840000%
TX194	Callahan County, Texas	0.0085960000%
TX195	Callisburg City, Texas	0.0000673330%
TX196	Calvert City, Texas	0.0005146670%

State ID	Qualifying Subdivision	Consolidated State Allocation
TX197	Cameron City, Texas	0.0073940000%
TX198	Cameron County, Texas	0.3580173330%
TX199	Camp County, Texas	0.0192340000%
TX200	Camp Wood City, Texas	0.0002813330%
TX201	Campbell City, Texas	0.0007440000%
TX202	Canadian City, Texas	0.0007266670%
TX203	Caney City Town, Texas	0.0013366670%
TX204	Canton City, Texas	0.0378226670%
TX205	Canyon City, Texas	0.0175006670%
TX206	Carbon Town, Texas	0.0004133330%
TX207	Carl's Corner Town, Texas	0.0000320000%
TX208	Carmine City, Texas	0.0002566670%
TX209	Carrizo Springs City, Texas	0.0011140000%
TX210	Carrollton City, Texas	0.2068366670%
TX211	Carson County, Texas	0.0196620000%
TX212	Carthage City, Texas	0.0126180000%
TX213	Cashion Community City, Texas	0.0002146670%
TX214	Cass County, Texas	0.0621033330%
TX215	Castle Hills City, Texas	0.0085200000%
TX216	Castro County, Texas	0.0029466670%
TX217	Castroville City, Texas	0.0030166670%
TX218	Cedar Hill City, Texas	0.0467513330%
TX219	Cedar Park City, Texas	0.1237113330%
TX220	Celeste City, Texas	0.0008533330%
TX221	Celina City, Texas	0.0121886670%
TX222	Center City, Texas	0.0392253330%
TX223	Centerville City, Texas	0.0002566670%
TX224	Chambers County, Texas	0.1021253330%
TX225	Chandler City, Texas	0.0115760000%
TX226	Channing City, Texas	0.0000013330%
TX227	Charlotte City, Texas	0.0028380000%
TX228	Cherokee County, Texas	0.1044080000%
TX229	Chester Town, Texas	0.0007826670%
TX230	Chico City, Texas	0.0019520000%
TX231	Childress City, Texas	0.0252773330%
TX232	Childress County, Texas	0.0337213330%
TX233	Chillicothe City, Texas	0.0001146670%
TX234	China City, Texas	0.0003480000%
TX235	China Grove Town, Texas	0.0003986670%
TX236	Chireno City, Texas	0.0010453330%
TX237	Christine Town, Texas	0.0002360000%
TX238	Cibolo City, Texas	0.0091266670%
TX239	Cisco City, Texas	0.0048120000%
TX240	Clarendon City, Texas	0.0000760000%
TX241	Clarksville City, Texas	0.0139273330%
TX242	Clarksville City, Texas	0.0000360000%
TX243	Claude City, Texas	0.0000173330%
TX244	Clay County, Texas	0.0480333330%
TX245	Clear Lake Shores City, Texas	0.0044546670%

State ID	Qualifying Subdivision	Consolidated State Allocation
TX246	Cleburne City, Texas	0.1521226670%
TX247	Cleveland City, Texas	0.0645980000%
TX248	Clifton City, Texas	0.0066260000%
TX249	Clint Town, Texas	0.0002500000%
TX250	Clute City, Texas	0.0342333330%
TX251	Clyde City, Texas	0.0115246670%
TX252	Coahoma Town, Texas	0.0015273330%
TX253	Cochran County, Texas	0.0022593330%
TX254	Cockrell Hill City, Texas	0.0003413330%
TX255	Coffee City Town, Texas	0.0007246670%
TX256	Coke County, Texas	0.0036813330%
TX257	Coldspring City, Texas	0.0002980000%
TX258	Coleman City, Texas	0.0036280000%
TX259	Coleman County, Texas	0.0027760000%
TX260	College Station City, Texas	0.1720980000%
TX261	Colleyville City, Texas	0.0306993330%
TX262	Collin County, Texas	0.8444806670%
TX263	Collingsworth County, Texas	0.0128226670%
TX264	Collinsville Town, Texas	0.0012206670%
TX265	Colmesneil City, Texas	0.0014740000%
TX266	Colorado City, Texas	0.0056033330%
TX267	Colorado County, Texas	0.0327226670%
TX268	Columbus City, Texas	0.0045780000%
TX269	Comal County, Texas	0.2640946670%
TX270	Comanche City, Texas	0.0110020000%
TX271	Comanche County, Texas	0.0339760000%
TX272	Combes Town, Texas	0.0011400000%
TX273	Combine City, Texas	0.0012613330%
TX274	Commerce City, Texas	0.0225793330%
TX275	Como Town, Texas	0.0002766670%
TX276	Concho County, Texas	0.0025726670%
TX277	Conroe City, Texas	0.3111140000%
TX278	Converse City, Texas	0.0184620000%
TX279	Cooke County, Texas	0.1336340000%
TX280	Cool City, Texas	0.0004873330%
TX281	Coolidge Town, Texas	0.0001620000%
TX282	Cooper City, Texas	0.0002413330%
TX283	Coppell City, Texas	0.0577286670%
TX284	Copper Canyon Town, Texas	0.0003260000%
TX285	Copperas Cove City, Texas	0.0889946670%
TX286	Corinth City, Texas	0.0501986670%
TX287	Corpus Christi City, Texas	1.2084713330%
TX288	Corral City Town, Texas	0.0000953330%
TX289	Corrigan Town, Texas	0.0142120000%
TX290	Corsicana City, Texas	0.0582066670%
TX291	Coryell County, Texas	0.0824393330%
TX292	Cottle County, Texas	0.0005833330%
TX293	Cottonwood City, Texas	0.0001926670%
TX294	Cottonwood Shores City, Texas	0.0008020000%

State ID	Qualifying Subdivision	Consolidated State Allocation
TX295	Cotulla City, Texas	0.0008340000%
TX296	Coupland City, Texas	0.0001773330%
TX297	Cove City, Texas	0.0002580000%
TX298	Covington City, Texas	0.0003460000%
TX299	Coyote Flats City, Texas	0.0009813330%
TX300	Crandall City, Texas	0.0080626670%
TX301	Crane City, Texas	0.0070660000%
TX302	Crane County, Texas	0.0174306670%
TX303	Cranfills Gap City, Texas	0.0000853330%
TX304	Crawford Town, Texas	0.0002553330%
TX305	Creedmoor City, Texas	0.0000106670%
TX306	Cresson City, Texas	0.0007240000%
TX307	Crockett City, Texas	0.0156020000%
TX308	Crockett County, Texas	0.0121400000%
TX309	Crosby County, Texas	0.0122586670%
TX310	Crosbyton City, Texas	0.0009986670%
TX311	Cross Plains Town, Texas	0.0032513330%
TX312	Cross Roads Town, Texas	0.0001626670%
TX313	Cross Timber Town, Texas	0.0003613330%
TX314	Crowell City, Texas	0.0042233330%
TX315	Crowley City, Texas	0.0148966670%
TX316	Crystal City, Texas	0.0129413330%
TX317	Cuero City, Texas	0.0164593330%
TX318	Culberson County, Texas	0.0005260000%
TX319	Cumby City, Texas	0.0035466670%
TX320	Cuney Town, Texas	0.0004040000%
TX321	Cushing City, Texas	0.0007466670%
TX322	Cut and Shoot City, Texas	0.0014273330%
TX323	Daingerfield City, Texas	0.0083173330%
TX324	Daisetta City, Texas	0.0035800000%
TX325	Dalhart City, Texas	0.0077393330%
TX326	Dallam County, Texas	0.0144573330%
TX327	Dallas City, Texas	1.9999346670%
TX328	Dallas County, Texas	5.6921940000%
TX329	Dalworthington Gardens City, Texas	0.0040400000%
TX330	Danbury City, Texas	0.0028206670%
TX331	Darrouzett Town, Texas	0.0000673330%
TX332	Dawson County, Texas	0.0312740000%
TX333	Dawson Town, Texas	0.0004000000%
TX334	Dayton City, Texas	0.0314146670%
TX335	Dayton Lakes City, Texas	0.0000253330%
TX336	De Kalb City, Texas	0.0006900000%
TX337	De Leon City, Texas	0.0054786670%
TX338	De Witt County, Texas	0.0459300000%
TX339	Deaf Smith County, Texas	0.0230213330%
TX340	Dean City, Texas	0.0000940000%
TX341	Decatur City, Texas	0.0377793330%
TX342	Decordova City, Texas	0.0091853330%

State ID	Qualifying Subdivision	Consolidated State Allocation
TX343	Deer Park City, Texas	0.0329253330%
TX344	Del Rio City, Texas	0.0393706670%
TX345	Dell City, Texas	0.0000100000%
TX346	Delta County, Texas	0.0203893330%
TX347	Denison City, Texas	0.1402840000%
TX348	Denton City, Texas	0.3055560000%
TX349	Denton County, Texas	0.7548653330%
TX350	Denver City Town, Texas	0.0014026670%
TX351	Deport City, Texas	0.0000280000%
TX352	Desoto City, Texas	0.0482666670%
TX353	Detroit Town, Texas	0.0006433330%
TX354	Devers City, Texas	0.0001273330%
TX355	Devine City, Texas	0.0029026670%
TX356	Diboll City, Texas	0.0170220000%
TX357	Dickens City, Texas	0.0000473330%
TX358	Dickens County, Texas	0.0012486670%
TX359	Dickinson City, Texas	0.0557886670%
TX360	Dilley City, Texas	0.0017553330%
TX361	Dimmit County, Texas	0.0221960000%
TX362	Dimmitt City, Texas	0.0006746670%
TX363	Dish Town, Texas	0.0000126670%
TX364	Dodd City Town, Texas	0.0008073330%
TX365	Dodson Town, Texas	0.0002980000%
TX366	Domino Town, Texas	0.0001306670%
TX367	Donley County, Texas	0.0149133330%
TX368	Donna City, Texas	0.0091986670%
TX369	Dorchester City, Texas	0.0001540000%
TX370	Double Oak Town, Texas	0.0031766670%
TX371	Douglassville Town, Texas	0.0003826670%
TX372	Dripping Springs City, Texas	0.0005406670%
TX373	Driscoll City, Texas	0.0000260000%
TX374	Dublin City, Texas	0.0096520000%
TX375	Dumas City, Texas	0.0174860000%
TX376	Duncanville City, Texas	0.0388853330%
TX377	Duval County, Texas	0.0327393330%
TX378	Eagle Lake City, Texas	0.0032546670%
TX379	Eagle Pass City, Texas	0.0373366670%
TX380	Early City, Texas	0.0098920000%
TX381	Earth City, Texas	0.0001613330%
TX382	East Bernard City, Texas	0.0037026670%
TX383	East Mountain City, Texas	0.0016626670%
TX384	East Tawakoni City, Texas	0.0018153330%
TX385	Eastland City, Texas	0.0105973330%
TX386	Eastland County, Texas	0.0348500000%
TX387	Easton City, Texas	0.0002193330%
TX388	Ector City, Texas	0.0007386670%
TX389	Ector County, Texas	0.3200000000%
TX390	Edcouch City, Texas	0.0027340000%
TX391	Eden City, Texas	0.0003313330%

State ID	Qualifying Subdivision	Consolidated State Allocation
TX392	Edgecliff Village Town, Texas	0.0014880000%
TX393	Edgewood Town, Texas	0.0087693330%
TX394	Edinburg City, Texas	0.0805893330%
TX395	Edmonson Town, Texas	0.0000906670%
TX396	Edna City, Texas	0.0121293330%
TX397	Edom City, Texas	0.0014326670%
TX398	Edwards County, Texas	0.0006500000%
TX399	El Campo City, Texas	0.0211333330%
TX400	El Cenizo City, Texas	0.0004140000%
TX401	El Lago City, Texas	0.0037360000%
TX402	El Paso City, Texas	0.8162473330%
TX403	El Paso County, Texas	1.7280806670%
TX404	Eldorado City, Texas	0.0000333330%
TX405	Electra City, Texas	0.0104773330%
TX406	Elgin City, Texas	0.0175226670%
TX407	Elkhart Town, Texas	0.0002006670%
TX408	Ellis County, Texas	0.2102480000%
TX409	Elmendorf City, Texas	0.0004973330%
TX410	Elsa City, Texas	0.0051466670%
TX411	Emhouse Town, Texas	0.0000553330%
TX412	Emory City, Texas	0.0025853330%
TX413	Enchanted Oaks Town, Texas	0.0008660000%
TX414	Encinal City, Texas	0.0010100000%
TX415	Ennis City, Texas	0.0545593330%
TX416	Erath County, Texas	0.0684106670%
TX417	Escobares City, Texas	0.0000266670%
TX418	Estelline Town, Texas	0.0006060000%
TX419	Euless City, Texas	0.0618826670%
TX420	Eureka City, Texas	0.0002226670%
TX421	Eustace City, Texas	0.0013926670%
TX422	Evant Town, Texas	0.0013786670%
TX423	Everman City, Texas	0.0051280000%
TX424	Fair Oaks Ranch City, Texas	0.0053846670%
TX425	Fairchilds Village, Texas	0.0000540000%
TX426	Fairfield City, Texas	0.0008300000%
TX427	Fairview Town, Texas	0.0214966670%
TX428	Falfurrias City, Texas	0.0014806670%
TX429	Falls City, Texas	0.0000273330%
TX430	Falls County, Texas	0.0230146670%
TX431	Fannin County, Texas	0.0877686670%
TX432	Farmers Branch City, Texas	0.0630213330%
TX433	Farmersville City, Texas	0.0070213330%
TX434	Farwell City, Texas	0.0002286670%
TX435	Fate City, Texas	0.0023153330%
TX436	Fayette County, Texas	0.0616266670%
TX437	Fayetteville City, Texas	0.0002606670%
TX438	Ferris City, Texas	0.0092486670%
TX439	Fisher County, Texas	0.0036786670%
TX440	Flatonia Town, Texas	0.0037740000%

State ID	Qualifying Subdivision	Consolidated State Allocation
TX441	Florence City, Texas	0.0026326670%
TX442	Floresville City, Texas	0.0144660000%
TX443	Flower Mound Town, Texas	0.1435040000%
TX444	Floyd County, Texas	0.0060326670%
TX445	Floydada City, Texas	0.0042380000%
TX446	Foard County, Texas	0.0038426670%
TX447	Follett City, Texas	0.0001413330%
TX448	Forest Hill City, Texas	0.0174213330%
TX449	Forney City, Texas	0.0534080000%
TX450	Forsan City, Texas	0.0003840000%
TX451	Fort Bend County, Texas	1.0044793330%
TX452	Fort Stockton City, Texas	0.0029406670%
TX453	Fort Worth City, Texas	1.4138600000%
TX454	Franklin City, Texas	0.0026206670%
TX455	Franklin County, Texas	0.0171886670%
TX456	Frankston Town, Texas	0.0001826670%
TX457	Fredericksburg City, Texas	0.0376573330%
TX458	Freeport City, Texas	0.0486486670%
TX459	Freer City, Texas	0.0021806670%
TX460	Freestone County, Texas	0.0336633330%
TX461	Friendswood City, Texas	0.0935533330%
TX462	Frio County, Texas	0.0133026670%
TX463	Friona City, Texas	0.0018986670%
TX464	Frisco City, Texas	0.2702060000%
TX465	Fritch City, Texas	0.0030320000%
TX466	Frost City, Texas	0.0002140000%
TX467	Fruitvale City, Texas	0.0015626670%
TX468	Fulshear City, Texas	0.0035146670%
TX469	Fulton Town, Texas	0.0010680000%
TX470	Gaines County, Texas	0.0362313330%
TX471	Gainesville City, Texas	0.1026533330%
TX472	Galena Park City, Texas	0.0087286670%
TX473	Gallatin City, Texas	0.0008353330%
TX474	Galveston City, Texas	0.3254580000%
TX475	Galveston County, Texas	0.7493953330%
TX476	Ganado City, Texas	0.0036733330%
TX477	Garden Ridge City, Texas	0.0075673330%
TX478	Garland City, Texas	0.2801626670%
TX479	Garrett Town, Texas	0.0016733330%
TX480	Garrison City, Texas	0.0023700000%
TX481	Gary City Town, Texas	0.0003000000%
TX482	Garza County, Texas	0.0059626670%
TX483	Gatesville City, Texas	0.0179960000%
TX484	George West City, Texas	0.0041380000%
TX485	Georgetown City, Texas	0.1505973330%
TX486	Gholson City, Texas	0.0010033330%
TX487	Giddings City, Texas	0.0084493330%
TX488	Gillespie County, Texas	0.0421273330%
TX489	Gilmer City, Texas	0.0226340000%

State ID	Qualifying Subdivision	Consolidated State Allocation
TX490	Gladewater City, Texas	0.0164253330%
TX491	Glasscock County, Texas	0.0006666670%
TX492	Glen Rose City, Texas	0.0003600000%
TX493	Glenn Heights City, Texas	0.0110620000%
TX494	Godley City, Texas	0.0020766670%
TX495	Goldsmith City, Texas	0.0004513330%
TX496	Goldthwaite City, Texas	0.0008166670%
TX497	Goliad City, Texas	0.0023753330%
TX498	Goliad County, Texas	0.0231066670%
TX499	Golinda City, Texas	0.0000666670%
TX500	Gonzales City, Texas	0.0099213330%
TX501	Gonzales County, Texas	0.0221533330%
TX502	Goodlow City, Texas	0.0001473330%
TX503	Goodrich City, Texas	0.0064286670%
TX504	Gordon City, Texas	0.0002433330%
TX505	Goree City, Texas	0.0004993330%
TX506	Gorman City, Texas	0.0020713330%
TX507	Graford City, Texas	0.0000153330%
TX508	Graham City, Texas	0.1569520000%
TX509	Granbury City, Texas	0.0478233330%
TX510	Grand Prairie City, Texas	0.2969593330%
TX511	Grand Saline City, Texas	0.0242753330%
TX512	Grandfalls Town, Texas	0.0000433330%
TX513	Grandview City, Texas	0.0044000000%
TX514	Granger City, Texas	0.0018273330%
TX515	Granite Shoals City, Texas	0.0078893330%
TX516	Granjeno City, Texas	0.0000286670%
TX517	Grapeland City, Texas	0.0048580000%
TX518	Grapevine City, Texas	0.0861300000%
TX519	Gray County, Texas	0.0439226670%
TX520	Grays Prairie Village, Texas	0.0000113330%
TX521	Grayson County, Texas	0.3593886670%
TX522	Greenville City, Texas	0.1354080000%
TX523	Gregg County, Texas	0.1624960000%
TX524	Gregory City, Texas	0.0031313330%
TX525	Grey Forest City, Texas	0.0003160000%
TX526	Grimes County, Texas	0.0632520000%
TX527	Groesbeck City, Texas	0.0038300000%
TX528	Groom Town, Texas	0.0006433330%
TX529	Groves City, Texas	0.0271680000%
TX530	Groveton City, Texas	0.0058846670%
TX531	Gruver City, Texas	0.0007773330%
TX532	Guadalupe County, Texas	0.0978826670%
TX533	Gun Barrel City, Texas	0.0242013330%
TX534	Gunter City, Texas	0.0030726670%
TX535	Gustine Town, Texas	0.0000226670%
TX536	Hackberry Town, Texas	0.0000626670%
TX537	Hale Center City, Texas	0.0040280000%
TX538	Hale County, Texas	0.0527666670%

State ID	Qualifying Subdivision	Consolidated State Allocation
TX539	Hall County, Texas	0.0059553330%
TX540	Hallettsville City, Texas	0.0045966670%
TX541	Hallsburg City, Texas	0.0001813330%
TX542	Hallsville City, Texas	0.0068260000%
TX543	Haltom City, Texas	0.0478666670%
TX544	Hamilton City, Texas	0.0023873330%
TX545	Hamilton County, Texas	0.0442380000%
TX546	Hamlin City, Texas	0.0031040000%
TX547	Hansford County, Texas	0.0109440000%
TX548	Happy Town, Texas	0.0002180000%
TX549	Hardeman County, Texas	0.0101460000%
TX550	Hardin City, Texas	0.0000666670%
TX551	Hardin County, Texas	0.2532000000%
TX552	Harker Heights City, Texas	0.0757873330%
TX553	Harlingen City, Texas	0.1102860000%
TX554	Harris County, Texas	9.9774680000%
TX555	Harrison County, Texas	0.1239400000%
TX556	Hart City, Texas	0.0000573330%
TX557	Hartley County, Texas	0.0005240000%
TX558	Haskell City, Texas	0.0072193330%
TX559	Haskell County, Texas	0.0146740000%
TX560	Haslet City, Texas	0.0012720000%
TX561	Hawk Cove City, Texas	0.0004493330%
TX562	Hawkins City, Texas	0.0052880000%
TX563	Hawley City, Texas	0.0006206670%
TX564	Hays City, Texas	0.0003373330%
TX565	Hays County, Texas	0.3529926670%
TX566	Hearne City, Texas	0.0112160000%
TX567	Heath City, Texas	0.0191673330%
TX568	Hebron Town, Texas	0.0004580000%
TX569	Hedley City, Texas	0.0000466670%
TX570	Hedwig Village City, Texas	0.0087113330%
TX571	Helotes City, Texas	0.0105266670%
TX572	Hemphill City, Texas	0.0053566670%
TX573	Hemphill County, Texas	0.0095960000%
TX574	Hempstead City, Texas	0.0141600000%
TX575	Henderson City, Texas	0.0399773330%
TX576	Henderson County, Texas	0.2186433330%
TX577	Henrietta City, Texas	0.0018133330%
TX578	Hereford City, Texas	0.0136153330%
TX579	Hewitt City, Texas	0.0131840000%
TX580	Hickory Creek Town, Texas	0.0110066670%
TX581	Hico City, Texas	0.0036893330%
TX582	Hidalgo City, Texas	0.0177473330%
TX583	Hidalgo County, Texas	0.8354020000%
TX584	Hideaway City, Texas	0.0006146670%
TX585	Higgins City, Texas	0.0000286670%
TX586	Highland Haven City, Texas	0.0002133330%
TX587	Highland Park Town, Texas	0.0289220000%

State ID	Qualifying Subdivision	Consolidated State Allocation
TX588	Highland Village City, Texas	0.0335433330%
TX589	Hill Country Village City, Texas	0.0043233330%
TX590	Hill County, Texas	0.0849846670%
TX591	Hillcrest Village, Texas	0.0035633330%
TX592	Hillsboro City, Texas	0.0310726670%
TX593	Hilshire Village City, Texas	0.0005726670%
TX594	Hitchcock City, Texas	0.0191973330%
TX595	Hockley County, Texas	0.0309380000%
TX596	Holiday Lakes Town, Texas	0.0011966670%
TX597	Holland Town, Texas	0.0000513330%
TX598	Holliday City, Texas	0.0039400000%
TX599	Hollywood Park Town, Texas	0.0062826670%
TX600	Hondo City, Texas	0.0768586670%
TX601	Honey Grove City, Texas	0.0047973330%
TX602	Hood County, Texas	0.1947366670%
TX603	Hooks City, Texas	0.0018013330%
TX604	Hopkins County, Texas	0.0996786670%
TX605	Horizon City, Texas	0.0050133330%
TX606	Horseshoe Bay City, Texas	0.0321153330%
TX607	Houston City, Texas	4.6811953330%
TX608	Houston County, Texas	0.0524320000%
TX609	Howard County, Texas	0.0595533330%
TX610	Howardwick City, Texas	0.0000560000%
TX611	Howe Town, Texas	0.0061180000%
TX612	Hubbard City, Texas	0.0024233330%
TX613	Hudson City, Texas	0.0045600000%
TX614	Hudson Oaks City, Texas	0.0104246670%
TX615	Hudspeth County, Texas	0.0006566670%
TX616	Hughes Springs City, Texas	0.0029613330%
TX617	Humble City, Texas	0.0493013330%
TX618	Hunt County, Texas	0.2065673330%
TX619	Hunters Creek Village City, Texas	0.0098053330%
TX620	Huntington City, Texas	0.0058613330%
TX621	Huntsville City, Texas	0.0535820000%
TX622	Hurst City, Texas	0.0661246670%
TX623	Hutchins City, Texas	0.0063673330%
TX624	Hutchinson County, Texas	0.0497533330%
TX625	Hutto City, Texas	0.0255640000%
TX626	Huxley City, Texas	0.0004920000%
TX627	Idalou City, Texas	0.0013326670%
TX628	Impact Town, Texas	0.0000053330%
TX629	Indian Lake Town, Texas	0.0003153330%
TX630	Industry City, Texas	0.0004026670%
TX631	Ingleside City, Texas	0.0269913330%
TX632	Ingleside on the Bay City, Texas	0.0000946670%
TX633	Ingram City, Texas	0.0034953330%
TX634	Iola City, Texas	0.0021093330%
TX635	Iowa Colony Village, Texas	0.0027266670%
TX636	Iowa Park City, Texas	0.0156580000%

State ID	Qualifying Subdivision	Consolidated State Allocation
TX637	Iraan City, Texas	0.0000373330%
TX638	Iredell City, Texas	0.0001440000%
TX639	Irion County, Texas	0.0060700000%
TX640	Irving City, Texas	0.2852120000%
TX641	Italy Town, Texas	0.0035660000%
TX642	Itasca City, Texas	0.0057960000%
TX643	Ivanhoe City, Texas	0.0000173330%
TX644	Jacinto City, Texas	0.0094273330%
TX645	Jack County, Texas	0.0098660000%
TX646	Jacksboro City, Texas	0.0155026670%
TX647	Jackson County, Texas	0.0253226670%
TX648	Jacksonville City, Texas	0.0534526670%
TX649	Jamaica Beach City, Texas	0.0032753330%
TX650	Jarrell City, Texas	0.0016153330%
TX651	Jasper City, Texas	0.0522813330%
TX652	Jasper County, Texas	0.1659033330%
TX653	Jayton City, Texas	0.0000420000%
TX654	Jeff Davis County, Texas	0.0056666670%
TX655	Jefferson City, Texas	0.0074626670%
TX656	Jefferson County, Texas	0.5044093330%
TX657	Jersey Village City, Texas	0.0242313330%
TX658	Jewett City, Texas	0.0062253330%
TX659	Jim Hogg County, Texas	0.0084786670%
TX660	Jim Wells County, Texas	0.1110260000%
TX661	Joaquin City, Texas	0.0005400000%
TX662	Johnson City, Texas	0.0023873330%
TX663	Johnson County, Texas	0.2724613330%
TX664	Jolly City, Texas	0.0000173330%
TX665	Jones County, Texas	0.0146673330%
TX666	Jones Creek Village, Texas	0.0033853330%
TX667	Jonestown City, Texas	0.0042793330%
TX668	Josephine City, Texas	0.0005873330%
TX669	Joshua City, Texas	0.0137460000%
TX670	Jourdanton City, Texas	0.0064000000%
TX671	Junction City, Texas	0.0032166670%
TX672	Justin City, Texas	0.0057166670%
TX673	Karnes City, Texas	0.0077546670%
TX674	Karnes County, Texas	0.0234993330%
TX675	Katy City, Texas	0.0349780000%
TX676	Kaufman City, Texas	0.0184046670%
TX677	Kaufman County, Texas	0.2353646670%
TX678	Keene City, Texas	0.0255306670%
TX679	Keller City, Texas	0.0527926670%
TX680	Kemah City, Texas	0.0188833330%
TX681	Kemp City, Texas	0.0042793330%
TX682	Kempner City, Texas	0.0002200000%
TX683	Kendall County, Texas	0.0670953330%
TX684	Kendleton City, Texas	0.0000086670%
TX685	Kenedy City, Texas	0.0004506670%

State ID	Qualifying Subdivision	Consolidated State Allocation
TX686	Kenedy County, Texas	0.0006666670%
TX687	Kenefick Town, Texas	0.0002773330%
TX688	Kennard City, Texas	0.0000880000%
TX689	Kennedale City, Texas	0.0140160000%
TX690	Kent County, Texas	0.0006260000%
TX691	Kerens City, Texas	0.0012826670%
TX692	Kermit City, Texas	0.0037680000%
TX693	Kerr County, Texas	0.1456346670%
TX694	Kerrville City, Texas	0.1269046670%
TX695	Kilgore City, Texas	0.0703886670%
TX696	Killeen City, Texas	0.3571000000%
TX697	Kimble County, Texas	0.0136533330%
TX698	King County, Texas	0.0006666670%
TX699	Kingsville City, Texas	0.0133886670%
TX700	Kinney County, Texas	0.0014280000%
TX701	Kirby City, Texas	0.0058346670%
TX702	Kirbyville City, Texas	0.0071266670%
TX703	Kirvin Town, Texas	0.0000013330%
TX704	Kleberg County, Texas	0.0827393330%
TX705	Knollwood City, Texas	0.0007733330%
TX706	Knox City Town, Texas	0.0013080000%
TX707	Knox County, Texas	0.0078200000%
TX708	Kosse Town, Texas	0.0016453330%
TX709	Kountze City, Texas	0.0131440000%
TX710	Kress City, Texas	0.0001240000%
TX711	Krugerville City, Texas	0.0010053330%
TX712	Krum City, Texas	0.0064406670%
TX713	Kurten Town, Texas	0.0004573330%
TX714	Kyle City, Texas	0.0345566670%
TX715	La Feria City, Texas	0.0069206670%
TX716	La Grange City, Texas	0.0064153330%
TX717	La Grulla City, Texas	0.0011386670%
TX718	La Joya City, Texas	0.0056380000%
TX719	La Marque City, Texas	0.0659533330%
TX720	La Porte City, Texas	0.0610213330%
TX721	La Salle County, Texas	0.0099833330%
TX722	La Vernia City, Texas	0.0021446670%
TX723	La Villa City, Texas	0.0003813330%
TX724	La Ward City, Texas	0.0002140000%
TX725	Lacoste City, Texas	0.0001060000%
TX726	Lacy-Lakeview City, Texas	0.0077326670%
TX727	Ladonia Town, Texas	0.0013406670%
TX728	Lago Vista City, Texas	0.0091786670%
TX729	Laguna Vista Town, Texas	0.0024593330%
TX730	Lake Bridgeport City, Texas	0.0001546670%
TX731	Lake City Town, Texas	0.0019453330%
TX732	Lake Dallas City, Texas	0.0168760000%
TX733	Lake Jackson City, Texas	0.0505206670%
TX734	Lake Tanglewood Village, Texas	0.0004086670%

State ID	Qualifying Subdivision	Consolidated State Allocation
TX735	Lake Worth City, Texas	0.0133673330%
TX736	Lakeport City, Texas	0.0003086670%
TX737	Lakeside City Town, Texas	0.0001480000%
TX738	Lakeside Town, San Patricio County, Texas	0.0029826670%
TX739	Lakeside Town, Tarrant County, Texas	0.0029826670%
TX740	Lakeview Town, Texas	0.0002846670%
TX741	Lakeway City, Texas	0.0211046670%
TX742	Lakewood Village City, Texas	0.0003713330%
TX743	Lamar County, Texas	0.0943986670%
TX744	Lamb County, Texas	0.0337873330%
TX745	Lamesa City, Texas	0.0197706670%
TX746	Lampasas City, Texas	0.0188073330%
TX747	Lampasas County, Texas	0.0285453330%
TX748	Lancaster City, Texas	0.0604353330%
TX749	Laredo City, Texas	0.5087826670%
TX750	Latexo City, Texas	0.0000826670%
TX751	Lavaca County, Texas	0.0306486670%
TX752	Lavon City, Texas	0.0049566670%
TX753	Lawn Town, Texas	0.0000386670%
TX754	League City, Texas	0.2016120000%
TX755	Leakey City, Texas	0.0001706670%
TX756	Leander City, Texas	0.0590940000%
TX757	Leary City, Texas	0.0005313330%
TX758	Lee County, Texas	0.0203046670%
TX759	Lefors Town, Texas	0.0001060000%
TX760	Leon County, Texas	0.0449286670%
TX761	Leon Valley City, Texas	0.0155053330%
TX762	Leona City, Texas	0.0005886670%
TX763	Leonard City, Texas	0.0056700000%
TX764	Leroy City, Texas	0.0001173330%
TX765	Levelland City, Texas	0.0312320000%
TX766	Lewisville City, Texas	0.2547293330%
TX767	Lexington Town, Texas	0.0015453330%
TX768	Liberty City, Texas	0.0482286670%
TX769	Liberty County, Texas	0.3541413330%
TX770	Liberty Hill City, Texas	0.0018533330%
TX771	Limestone County, Texas	0.0904560000%
TX772	Lincoln Park Town, Texas	0.0004513330%
TX773	Lindale City, Texas	0.0161346670%
TX774	Linden City, Texas	0.0024406670%
TX775	Lindsay City, Texas	0.0008186670%
TX776	Lipan City, Texas	0.0000293330%
TX777	Lipscomb County, Texas	0.0067546670%
TX778	Little Elm City, Texas	0.0462173330%
TX779	Little River-Academy City, Texas	0.0005320000%
TX780	Littlefield City, Texas	0.0051186670%
TX781	Live Oak City, Texas	0.0218266670%

State ID	Qualifying Subdivision	Consolidated State Allocation
TX782	Live Oak County, Texas	0.0264773330%
TX783	Liverpool City, Texas	0.0009566670%
TX784	Livingston Town, Texas	0.0487766670%
TX785	Llano City, Texas	0.0154140000%
TX786	Llano County, Texas	0.0770980000%
TX787	Lockhart City, Texas	0.0327000000%
TX788	Lockney Town, Texas	0.0022006670%
TX789	Log Cabin City, Texas	0.0013066670%
TX790	Lometa City, Texas	0.0007840000%
TX791	Lone Oak City, Texas	0.0011366670%
TX792	Lone Star City, Texas	0.0055220000%
TX793	Longview City, Texas	0.3215026670%
TX794	Loraine Town, Texas	0.0001253330%
TX795	Lorena City, Texas	0.0022600000%
TX796	Lorenzo City, Texas	0.0075720000%
TX797	Los Fresnos City, Texas	0.0074566670%
TX798	Los Indios Town, Texas	0.0001060000%
TX799	Lott City, Texas	0.0010106670%
TX800	Lovelady City, Texas	0.0001660000%
TX801	Loving County, Texas	0.0006666670%
TX802	Lowry Crossing City, Texas	0.0005220000%
TX803	Lubbock City, Texas	0.2132446670%
TX804	Lubbock County, Texas	0.9198126670%
TX805	Lucas City, Texas	0.0035106670%
TX806	Lueders City, Texas	0.0003386670%
TX807	Lufkin City, Texas	0.1877280000%
TX808	Luling City, Texas	0.0196140000%
TX809	Lumberton City, Texas	0.0244060000%
TX810	Lyford City, Texas	0.0020473330%
TX811	Lynn County, Texas	0.0041833330%
TX812	Lytle City, Texas	0.0048153330%
TX813	Mabank Town, Texas	0.0129620000%
TX814	Madison County, Texas	0.0329946670%
TX815	Madisonville City, Texas	0.0076386670%
TX816	Magnolia City, Texas	0.0173540000%
TX817	Malakoff City, Texas	0.0084093330%
TX818	Malone Town, Texas	0.0002926670%
TX819	Manor City, Texas	0.0083326670%
TX820	Mansfield City, Texas	0.1005253330%
TX821	Manvel City, Texas	0.0082033330%
TX822	Marble Falls City, Texas	0.0246926670%
TX823	Marfa City, Texas	0.0000433330%
TX824	Marietta Town, Texas	0.0002253330%
TX825	Marion City, Texas	0.0001833330%
TX826	Marion County, Texas	0.0364853330%
TX827	Marlin City, Texas	0.0144226670%
TX828	Marquez City, Texas	0.0008813330%
TX829	Marshall City, Texas	0.0722473330%
TX830	Mart City, Texas	0.0006186670%

State ID	Qualifying Subdivision	Consolidated State Allocation
TX831	Martin County, Texas	0.0072413330%
TX832	Martindale City, Texas	0.0016246670%
TX833	Mason City, Texas	0.0005180000%
TX834	Mason County, Texas	0.0020893330%
TX835	Matador Town, Texas	0.0008020000%
TX836	Matagorda County, Texas	0.0901593330%
TX837	Mathis City, Texas	0.0104800000%
TX838	Maud City, Texas	0.0002820000%
TX839	Maverick County, Texas	0.0772793330%
TX840	Maypearl City, Texas	0.0006573330%
TX841	McAllen City, Texas	0.2429493330%
TX842	McCamey City, Texas	0.0003613330%
TX843	McCulloch County, Texas	0.0133473330%
TX844	McGregor City, Texas	0.0061033330%
TX845	McKinney City, Texas	0.3002553330%
TX846	McLean Town, Texas	0.0000093330%
TX847	McLendon-Chisholm City, Texas	0.0002740000%
TX848	McLennan County, Texas	0.3530940000%
TX849	McMullen County, Texas	0.0006666670%
TX850	Meadow Town, Texas	0.0007473330%
TX851	Meadowlakes City, Texas	0.0006033330%
TX852	Meadows Place City, Texas	0.0120986670%
TX853	Medina County, Texas	0.0322366670%
TX854	Megargel Town, Texas	0.0004073330%
TX855	Melissa City, Texas	0.0102540000%
TX856	Melvin Town, Texas	0.0002300000%
TX857	Memphis City, Texas	0.0048020000%
TX858	Menard City, Texas	0.0006606670%
TX859	Menard County, Texas	0.0098113330%
TX860	Mercedes City, Texas	0.0142940000%
TX861	Meridian City, Texas	0.0023640000%
TX862	Merkel Town, Texas	0.0067446670%
TX863	Mertens Town, Texas	0.0001593330%
TX864	Mertzon City, Texas	0.0000193330%
TX865	Mesquite City, Texas	0.2071393330%
TX866	Mexia City, Texas	0.0140640000%
TX867	Miami City, Texas	0.0003033330%
TX868	Midland City, Texas	0.3478993330%
TX869	Midland County, Texas	0.1866180000%
TX870	Midlothian City, Texas	0.0638660000%
TX871	Midway City, Texas	0.0000520000%
TX872	Milam County, Texas	0.0649240000%
TX873	Milano City, Texas	0.0006026670%
TX874	Mildred Town, Texas	0.0001906670%
TX875	Miles City, Texas	0.0000620000%
TX876	Milford Town, Texas	0.0041180000%
TX877	Miller's Cove Town, Texas	0.0000646670%
TX878	Millican Town, Texas	0.0002780000%
TX879	Mills County, Texas	0.0132873330%

State ID	Qualifying Subdivision	Consolidated State Allocation
TX880	Millsap Town, Texas	0.0000226670%
TX881	Mineola City, Texas	0.0324793330%
TX882	Mineral Wells City, Texas	0.0613740000%
TX883	Mingus City, Texas	0.0001260000%
TX884	Mission City, Texas	0.0831786670%
TX885	Missouri City, Texas	0.1397553330%
TX886	Mitchell County, Texas	0.0139000000%
TX887	Mobeetie City, Texas	0.0000346670%
TX888	Mobile City, Texas	0.0013560000%
TX889	Monahans City, Texas	0.0038993330%
TX890	Mont Belvieu City, Texas	0.0131126670%
TX891	Montague County, Texas	0.0631973330%
TX892	Montgomery City, Texas	0.0012560000%
TX893	Montgomery County, Texas	1.8006073330%
TX894	Moody City, Texas	0.0005520000%
TX895	Moore County, Texas	0.0270846670%
TX896	Moore Station City, Texas	0.0005146670%
TX897	Moran City, Texas	0.0000333330%
TX898	Morgan City, Texas	0.0004033330%
TX899	Morgan's Point City, Texas	0.0020700000%
TX900	Morgan's Point Resort City, Texas	0.0053493330%
TX901	Morris County, Texas	0.0355520000%
TX902	Morton City, Texas	0.0001113330%
TX903	Motley County, Texas	0.0022293330%
TX904	Moulton Town, Texas	0.0006660000%
TX905	Mount Calm City, Texas	0.0004033330%
TX906	Mount Enterprise City, Texas	0.0012213330%
TX907	Mount Pleasant City, Texas	0.0437893330%
TX908	Mount Vernon Town, Texas	0.0040326670%
TX909	Mountain City, Texas	0.0010320000%
TX910	Muenster City, Texas	0.0031040000%
TX911	Muleshoe City, Texas	0.0032733330%
TX912	Mullin Town, Texas	0.0002560000%
TX913	Munday City, Texas	0.0013646670%
TX914	Murchison City, Texas	0.0015346670%
TX915	Murphy City, Texas	0.0345953330%
TX916	Mustang Ridge City, Texas	0.0016413330%
TX917	Mustang Town, Texas	0.0000046670%
TX918	Nacogdoches City, Texas	0.1373280000%
TX919	Nacogdoches County, Texas	0.1323886670%
TX920	Naples City, Texas	0.0028160000%
TX921	Nash City, Texas	0.0053326670%
TX922	Nassau Bay City, Texas	0.0074980000%
TX923	Natalia City, Texas	0.0004166670%
TX924	Navarro County, Texas	0.0690086670%
TX925	Navarro Town, Texas	0.0002226670%
TX926	Navasota City, Texas	0.0251173330%
TX927	Nazareth City, Texas	0.0000826670%
TX928	Nederland City, Texas	0.0297233330%

State ID	Qualifying Subdivision	Consolidated State Allocation
TX929	Needville City, Texas	0.0068940000%
TX930	Nevada City, Texas	0.0001580000%
TX931	New Berlin City, Texas	0.0000026670%
TX932	New Boston City, Texas	0.0046353330%
TX933	New Braunfels City, Texas	0.2048753330%
TX934	New Chapel Hill City, Texas	0.0001920000%
TX935	New Deal Town, Texas	0.0002253330%
TX936	New Fairview City, Texas	0.0015560000%
TX937	New Home City, Texas	0.0000060000%
TX938	New Hope Town, Texas	0.0006826670%
TX939	New London City, Texas	0.0027526670%
TX940	New Summerfield City, Texas	0.0002946670%
TX941	New Waverly City, Texas	0.0017080000%
TX942	Newark City, Texas	0.0003466670%
TX943	Newcastle City, Texas	0.0006093330%
TX944	Newton City, Texas	0.0040680000%
TX945	Newton County, Texas	0.1053373330%
TX946	Neylandville Town, Texas	0.0001086670%
TX947	Niederwald City, Texas	0.0000106670%
TX948	Nixon City, Texas	0.0015220000%
TX949	Nocona City, Texas	0.0110240000%
TX950	Nolan County, Texas	0.0335080000%
TX951	Nolanville City, Texas	0.0028313330%
TX952	Nome City, Texas	0.0002606670%
TX953	Noonday City, Texas	0.0001506670%
TX954	Nordheim City, Texas	0.0004646670%
TX955	Normangee Town, Texas	0.0041280000%
TX956	North Cleveland City, Texas	0.0000700000%
TX957	North Richland Hills City, Texas	0.0976126670%
TX958	Northlake Town, Texas	0.0059366670%
TX959	Novice City, Texas	0.0000506670%
TX960	Nueces County, Texas	0.9119546670%
TX961	Oak Grove Town, Texas	0.0018460000%
TX962	Oak Leaf City, Texas	0.0004080000%
TX963	Oak Point City, Texas	0.0060073330%
TX964	Oak Ridge North City, Texas	0.0223413330%
TX965	Oak Ridge Town, Cooke County, Texas	0.0002386670%
TX966	Oak Ridge Town, Kaufman County, Texas	0.0002386670%
TX967	Oak Valley Town, Texas	0.0000046670%
TX968	Oakwood Town, Texas	0.0000986670%
TX969	O'Brien City, Texas	0.0000506670%
TX970	Ochiltree County, Texas	0.0103173330%
TX971	Odem City, Texas	0.0049466670%
TX972	Odessa City, Texas	0.3727753330%
TX973	O'Donnell City, Texas	0.0000180000%
TX974	Oglesby City, Texas	0.0000193330%
TX975	Old River-Winfree City, Texas	0.0144353330%

State ID	Qualifying Subdivision	Consolidated State Allocation
TX976	Oldham County, Texas	0.0068786670%
TX977	Olmos Park City, Texas	0.0065340000%
TX978	Olney City, Texas	0.0040586670%
TX979	Olton City, Texas	0.0007980000%
TX980	Omaha City, Texas	0.0027900000%
TX981	Onalaska City, Texas	0.0211026670%
TX982	Opdyke West Town, Texas	0.0003193330%
TX983	Orange City, Texas	0.2075593330%
TX984	Orange County, Texas	0.4598786670%
TX985	Orange Grove City, Texas	0.0011180000%
TX986	Orchard City, Texas	0.0005780000%
TX987	Ore City, Texas	0.0045373330%
TX988	Overton City, Texas	0.0052666670%
TX989	Ovilla City, Texas	0.0089273330%
TX990	Oyster Creek City, Texas	0.0064220000%
TX991	Paducah Town, Texas	0.0000833330%
TX992	Paint Rock Town, Texas	0.0000940000%
TX993	Palacios City, Texas	0.0093573330%
TX994	Palestine City, Texas	0.1186726670%
TX995	Palisades Village, Texas	0.0001600000%
TX996	Palm Valley City, Texas	0.0012786670%
TX997	Palmer Town, Texas	0.0084440000%
TX998	Palmhurst City, Texas	0.0031066670%
TX999	Palmview City, Texas	0.0050513330%
TX1000	Palo Pinto County, Texas	0.0830806670%
TX1001	Pampa City, Texas	0.0448180000%
TX1002	Panhandle Town, Texas	0.0063573330%
TX1003	Panola County, Texas	0.0537993330%
TX1004	Panorama Village City, Texas	0.0008613330%
TX1005	Pantego Town, Texas	0.0085986670%
TX1006	Paradise City, Texas	0.0000346670%
TX1007	Paris City, Texas	0.1341200000%
TX1008	Parker City, Texas	0.0068713330%
TX1009	Parker County, Texas	0.3175026670%
TX1010	Parmer County, Texas	0.0105773330%
TX1011	Pasadena City, Texas	0.2376906670%
TX1012	Pattison City, Texas	0.0007653330%
TX1013	Patton Village City, Texas	0.0061786670%
TX1014	Payne Springs Town, Texas	0.0011800000%
TX1015	Pearland City, Texas	0.2225013330%
TX1016	Pearsall City, Texas	0.0077133330%
TX1017	Pecan Gap City, Texas	0.0004793330%
TX1018	Pecan Hill City, Texas	0.0001526670%
TX1019	Pecos City, Texas	0.0050813330%
TX1020	Pecos County, Texas	0.0313313330%
TX1021	Pelican Bay City, Texas	0.0007993330%
TX1022	Penelope Town, Texas	0.0002766670%
TX1023	Penitas City, Texas	0.0002080000%
TX1024	Perryton City, Texas	0.0155760000%

State ID	Qualifying Subdivision	Consolidated State Allocation
TX1025	Petersburg City, Texas	0.0011273330%
TX1026	Petrolia City, Texas	0.0000113330%
TX1027	Petronila City, Texas	0.0000033330%
TX1028	Pflugerville City, Texas	0.0576053330%
TX1029	Pharr City, Texas	0.0964806670%
TX1030	Pilot Point City, Texas	0.0077420000%
TX1031	Pine Forest City, Texas	0.0025960000%
TX1032	Pine Island Town, Texas	0.0020940000%
TX1033	Pinehurst City, Texas	0.0217806670%
TX1034	Pineland City, Texas	0.0027586670%
TX1035	Piney Point Village City, Texas	0.0104920000%
TX1036	Pittsburg City, Texas	0.0136840000%
TX1037	Plains Town, Texas	0.0000860000%
TX1038	Plainview City, Texas	0.0401986670%
TX1039	Plano City, Texas	0.7677386670%
TX1040	Pleak Village, Texas	0.0001800000%
TX1041	Pleasant Valley Town, Texas	0.0002053330%
TX1042	Pleasanton City, Texas	0.0193406670%
TX1043	Plum Grove City, Texas	0.0001720000%
TX1044	Point Blank City, Texas	0.0002366670%
TX1045	Point City, Texas	0.0010126670%
TX1046	Point Comfort City, Texas	0.0002980000%
TX1047	Point Venture Village, Texas	0.0003920000%
TX1048	Polk County, Texas	0.2472206670%
TX1049	Ponder Town, Texas	0.0008546670%
TX1050	Port Aransas City, Texas	0.0206813330%
TX1051	Port Arthur City, Texas	0.2452966670%
TX1052	Port Isabel City, Texas	0.0065346670%
TX1053	Port Lavaca City, Texas	0.0078346670%
TX1054	Port Neches City, Texas	0.0258993330%
TX1055	Portland City, Texas	0.0510113330%
TX1056	Post City, Texas	0.0015546670%
TX1057	Post Oak Bend City Town, Texas	0.0006893330%
TX1058	Poteet City, Texas	0.0045113330%
TX1059	Poth Town, Texas	0.0026493330%
TX1060	Potter County, Texas	0.2478006670%
TX1061	Pottsboro Town, Texas	0.0082013330%
TX1062	Powell Town, Texas	0.0000733330%
TX1063	Poynor Town, Texas	0.0007866670%
TX1064	Prairie View City, Texas	0.0050666670%
TX1065	Premont City, Texas	0.0022140000%
TX1066	Presidio City, Texas	0.0000986670%
TX1067	Presidio County, Texas	0.0005246670%
TX1068	Primera Town, Texas	0.0019720000%
TX1069	Princeton City, Texas	0.0128300000%
TX1070	Progreso City, Texas	0.0053813330%
TX1071	Progreso Lakes City, Texas	0.0000260000%
TX1072	Prosper Town, Texas	0.0151800000%
TX1073	Providence Village Town, Texas	0.0003386670%

State ID	Qualifying Subdivision	Consolidated State Allocation
TX1074	Putnam Town, Texas	0.0000093330%
TX1075	Pyote Town, Texas	0.0000146670%
TX1076	Quanah City, Texas	0.0001380000%
TX1077	Queen City, Texas	0.0032246670%
TX1078	Quinlan City, Texas	0.0048693330%
TX1079	Quintana Town, Texas	0.0003280000%
TX1080	Quitaque City, Texas	0.0000053330%
TX1081	Quitman City, Texas	0.0104126670%
TX1082	Rains County, Texas	0.0354600000%
TX1083	Ralls City, Texas	0.0026446670%
TX1084	Rancho Viejo Town, Texas	0.0025573330%
TX1085	Randall County, Texas	0.1854173330%
TX1086	Ranger City, Texas	0.0081240000%
TX1087	Rankin City, Texas	0.0010753330%
TX1088	Ransom Canyon Town, Texas	0.0006200000%
TX1089	Ravenna City, Texas	0.0004566670%
TX1090	Raymondville City, Texas	0.0049773330%
TX1091	Reagan County, Texas	0.0168100000%
TX1092	Real County, Texas	0.0033820000%
TX1093	Red Lick City, Texas	0.0000153330%
TX1094	Red Oak City, Texas	0.0178953330%
TX1095	Red River County, Texas	0.0195373330%
TX1096	Redwater City, Texas	0.0007053330%
TX1097	Reeves County, Texas	0.0689000000%
TX1098	Refugio County, Texas	0.0308106670%
TX1099	Refugio Town, Texas	0.0058926670%
TX1100	Reklaw City, Texas	0.0007573330%
TX1101	Reno City, Lamar County, Texas	0.0074426670%
TX1102	Reno City, Parker County, Texas	0.0025273330%
TX1103	Retreat Town, Texas	0.0000346670%
TX1104	Rhome City, Texas	0.0081900000%
TX1105	Rice City, Texas	0.0013146670%
TX1106	Richardson City, Texas	0.1735433330%
TX1107	Richland Hills City, Texas	0.0162920000%
TX1108	Richland Springs Town, Texas	0.0014893330%
TX1109	Richland Town, Texas	0.0001400000%
TX1110	Richmond City, Texas	0.0517373330%
TX1111	Richwood City, Texas	0.0080746670%
TX1112	Riesel City, Texas	0.0007453330%
TX1113	Rio Bravo City, Texas	0.0056986670%
TX1114	Rio Grande City, Texas	0.0172980000%
TX1115	Rio Hondo City, Texas	0.0023666670%
TX1116	Rio Vista City, Texas	0.0029460000%
TX1117	Rising Star Town, Texas	0.0012886670%
TX1118	River Oaks City, Texas	0.0079446670%
TX1119	Riverside City, Texas	0.0005720000%
TX1120	Roanoke City, Texas	0.0001833330%
TX1121	Roaring Springs Town, Texas	0.0003073330%
TX1122	Robert Lee City, Texas	0.0000566670%

State ID	Qualifying Subdivision	Consolidated State Allocation
TX1123	Roberts County, Texas	0.0003646670%
TX1124	Robertson County, Texas	0.0297613330%
TX1125	Robinson City, Texas	0.0120013330%
TX1126	Robstown City, Texas	0.0267693330%
TX1127	Roby City, Texas	0.0002853330%
TX1128	Rochester Town, Texas	0.0004493330%
TX1129	Rockdale City, Texas	0.0139820000%
TX1130	Rockport City, Texas	0.0361686670%
TX1131	Rocksprings Town, Texas	0.0000166670%
TX1132	Rockwall City, Texas	0.0762053330%
TX1133	Rockwall County, Texas	0.1125466670%
TX1134	Rocky Mound Town, Texas	0.0001866670%
TX1135	Rogers Town, Texas	0.0025453330%
TX1136	Rollingwood City, Texas	0.0031693330%
TX1137	Roma City, Texas	0.0110860000%
TX1138	Roman Forest Town, Texas	0.0057400000%
TX1139	Ropesville City, Texas	0.0014146670%
TX1140	Roscoe City, Texas	0.0005186670%
TX1141	Rose City, Texas	0.0026746670%
TX1142	Rose Hill Acres City, Texas	0.0015406670%
TX1143	Rosebud City, Texas	0.0009926670%
TX1144	Rosenberg City, Texas	0.0843953330%
TX1145	Ross City, Texas	0.0000980000%
TX1146	Rosser Village, Texas	0.0003660000%
TX1147	Rotan City, Texas	0.0009953330%
TX1148	Round Mountain Town, Texas	0.0003026670%
TX1149	Round Rock City, Texas	0.3173280000%
TX1150	Round Top Town, Texas	0.0000933330%
TX1151	Rowlett City, Texas	0.0666420000%
TX1152	Roxton City, Texas	0.0000313330%
TX1153	Royse City, Texas	0.0156626670%
TX1154	Rule Town, Texas	0.0005333330%
TX1155	Runaway Bay City, Texas	0.0046206670%
TX1156	Runge Town, Texas	0.0001700000%
TX1157	Runnels County, Texas	0.0225540000%
TX1158	Rusk City, Texas	0.0119940000%
TX1159	Rusk County, Texas	0.1009266670%
TX1160	Sabinal City, Texas	0.0012073330%
TX1161	Sabine County, Texas	0.0309860000%
TX1162	Sachse City, Texas	0.0156000000%
TX1163	Sadler City, Texas	0.0006166670%
TX1164	Saginaw City, Texas	0.0213153330%
TX1165	Salado Village, Texas	0.0021400000%
TX1166	San Angelo City, Texas	0.3576726670%
TX1167	San Antonio City, Texas	2.9102773330%
TX1168	San Augustine City, Texas	0.0167880000%
TX1169	San Augustine County, Texas	0.0252360000%
TX1170	San Benito City, Texas	0.0266766670%
TX1171	San Diego City, Texas	0.0078473330%

State ID	Qualifying Subdivision	Consolidated State Allocation
TX1172	San Elizario City, Texas	0.0052206670%
TX1173	San Felipe Town, Texas	0.0009986670%
TX1174	San Jacinto County, Texas	0.1315986670%
TX1175	San Juan City, Texas	0.0192300000%
TX1176	San Leanna Village, Texas	0.0000240000%
TX1177	San Marcos City, Texas	0.2171253330%
TX1178	San Patricio City, Texas	0.0028086670%
TX1179	San Patricio County, Texas	0.1812773330%
TX1180	San Perlita City, Texas	0.0014793330%
TX1181	San Saba City, Texas	0.0067046670%
TX1182	San Saba County, Texas	0.0117080000%
TX1183	Sanctuary Town, Texas	0.0000113330%
TX1184	Sandy Oaks City, Texas	0.0065753330%
TX1185	Sandy Point City, Texas	0.0010913330%
TX1186	Sanford Town, Texas	0.0002053330%
TX1187	Sanger City, Texas	0.0148246670%
TX1188	Sansom Park City, Texas	0.0001486670%
TX1189	Santa Anna Town, Texas	0.0002193330%
TX1190	Santa Clara City, Texas	0.0000580000%
TX1191	Santa Fe City, Texas	0.0221813330%
TX1192	Santa Rosa Town, Texas	0.0014253330%
TX1193	Savoy City, Texas	0.0015660000%
TX1194	Schertz City, Texas	0.0400733330%
TX1195	Schleicher County, Texas	0.0037966670%
TX1196	Schulenburg City, Texas	0.0017066670%
TX1197	Scotland City, Texas	0.0000986670%
TX1198	Scottsville City, Texas	0.0004720000%
TX1199	Scurry County, Texas	0.0487440000%
TX1200	Scurry Town, Texas	0.0007400000%
TX1201	Seabrook City, Texas	0.0201800000%
TX1202	Seadrift City, Texas	0.0006606670%
TX1203	Seagoville City, Texas	0.0114040000%
TX1204	Seagraves City, Texas	0.0050206670%
TX1205	Sealy City, Texas	0.0137580000%
TX1206	Seguin City, Texas	0.2510253330%
TX1207	Selma City, Texas	0.0149526670%
TX1208	Seminole City, Texas	0.0107280000%
TX1209	Seven Oaks City, Texas	0.0026113330%
TX1210	Seven Points City, Texas	0.0049680000%
TX1211	Seymour City, Texas	0.0094786670%
TX1212	Shackelford County, Texas	0.0008586670%
TX1213	Shady Shores Town, Texas	0.0003960000%
TX1214	Shallowater City, Texas	0.0012713330%
TX1215	Shamrock City, Texas	0.0028853330%
TX1216	Shavano Park City, Texas	0.0021186670%
TX1217	Shelby County, Texas	0.0732833330%
TX1218	Shenandoah City, Texas	0.0314146670%
TX1219	Shepherd City, Texas	0.0000980000%
TX1220	Sherman City, Texas	0.2203900000%

State ID	Qualifying Subdivision	Consolidated State Allocation
TX1221	Sherman County, Texas	0.0052866670%
TX1222	Shiner City, Texas	0.0026946670%
TX1223	Shoreacres City, Texas	0.0006386670%
TX1224	Silsbee City, Texas	0.0442946670%
TX1225	Silverton City, Texas	0.0000093330%
TX1226	Simonton City, Texas	0.0012706670%
TX1227	Sinton City, Texas	0.0157720000%
TX1228	Skellytown, Texas	0.0002666670%
TX1229	Slaton City, Texas	0.0001026670%
TX1230	Smiley City, Texas	0.0004366670%
TX1231	Smith County, Texas	0.5059740000%
TX1232	Smithville City, Texas	0.0113393330%
TX1233	Smyer Town, Texas	0.0002000000%
TX1234	Snook City, Texas	0.0009480000%
TX1235	Snyder City, Texas	0.0060120000%
TX1236	Socorro City, Texas	0.0074166670%
TX1237	Somerset City, Texas	0.0010180000%
TX1238	Somervell County, Texas	0.0380506670%
TX1239	Somerville City, Texas	0.0025373330%
TX1240	Sonora City, Texas	0.0048913330%
TX1241	Sour Lake City, Texas	0.0119040000%
TX1242	South Houston City, Texas	0.0170800000%
TX1243	South Mountain Town, Texas	0.0001026670%
TX1244	South Padre Island Town, Texas	0.0204193330%
TX1245	Southlake City, Texas	0.0472306670%
TX1246	Southmayd City, Texas	0.0047306670%
TX1247	Southside Place City, Texas	0.0005900000%
TX1248	Spearman City, Texas	0.0093333330%
TX1249	Splendora City, Texas	0.0051706670%
TX1250	Spofford City, Texas	0.0000046670%
TX1251	Spring Valley Village City, Texas	0.0109360000%
TX1252	Springlake Town, Texas	0.0000020000%
TX1253	Springtown City, Texas	0.0094960000%
TX1254	Spur City, Texas	0.0002846670%
TX1255	St. Hedwig Town, Texas	0.0000740000%
TX1256	St. Jo City, Texas	0.0049066670%
TX1257	St. Paul Town, Texas	0.0000140000%
TX1258	Stafford City, Texas	0.0500966670%
TX1259	Stagecoach Town, Texas	0.0020240000%
TX1260	Stamford City, Texas	0.0002653330%
TX1261	Stanton City, Texas	0.0025586670%
TX1262	Staples City, Texas	0.0000126670%
TX1263	Star Harbor City, Texas	0.0001006670%
TX1264	Starr County, Texas	0.0665973330%
TX1265	Stephens County, Texas	0.0234960000%
TX1266	Stephenville City, Texas	0.0556480000%
TX1267	Sterling City, Texas	0.0000413330%
TX1268	Sterling County, Texas	0.0006260000%
TX1269	Stinnett City, Texas	0.0027313330%

State ID	Qualifying Subdivision	Consolidated State Allocation
TX1270	Stockdale City, Texas	0.0004940000%
TX1271	Stonewall County, Texas	0.0012146670%
TX1272	Stratford City, Texas	0.0055853330%
TX1273	Strawn City, Texas	0.0006580000%
TX1274	Streetman Town, Texas	0.0000033330%
TX1275	Sudan City, Texas	0.0000213330%
TX1276	Sugar Land City, Texas	0.2143740000%
TX1277	Sullivan City, Texas	0.0040806670%
TX1278	Sulphur Springs City, Texas	0.0830686670%
TX1279	Sun Valley City, Texas	0.0000026670%
TX1280	Sundown City, Texas	0.0017280000%
TX1281	Sunnyvale Town, Texas	0.0021653330%
TX1282	Sunray City, Texas	0.0017140000%
TX1283	Sunrise Beach Village City, Texas	0.0013886670%
TX1284	Sunset Valley City, Texas	0.0062833330%
TX1285	Surfside Beach City, Texas	0.0043533330%
TX1286	Sutton County, Texas	0.0043606670%
TX1287	Sweeny City, Texas	0.0030020000%
TX1288	Sweetwater City, Texas	0.0454986670%
TX1289	Swisher County, Texas	0.0048340000%
TX1290	Taft City, Texas	0.0039073330%
TX1291	Tahoka City, Texas	0.0002866670%
TX1292	Talco City, Texas	0.0002480000%
TX1293	Talty Town, Texas	0.0060826670%
TX1294	Tarrant County, Texas	4.1141060000%
TX1295	Tatum City, Texas	0.0006480000%
TX1296	Taylor City, Texas	0.0386300000%
TX1297	Taylor County, Texas	0.2340520000%
TX1298	Taylor Lake Village City, Texas	0.0002746670%
TX1299	Taylor Landing City, Texas	0.0001020000%
TX1300	Teague City, Texas	0.0011426670%
TX1301	Tehuacana Town, Texas	0.0000080000%
TX1302	Temple City, Texas	0.1871646670%
TX1303	Tenaha Town, Texas	0.0031453330%
TX1304	Terrell City, Texas	0.0991373330%
TX1305	Terrell County, Texas	0.0038246670%
TX1306	Terrell Hills City, Texas	0.0065720000%
TX1307	Terry County, Texas	0.0169486670%
TX1308	Texarkana City, Texas	0.1280626670%
TX1309	Texas City, Texas	0.1991346670%
TX1310	Texhoma City, Texas	0.0001040000%
TX1311	Texline Town, Texas	0.0005766670%
TX1312	The Colony City, Texas	0.0761980000%
TX1313	The Hills Village, Texas	0.0006693330%
TX1314	Thompsons Town, Texas	0.0012646670%
TX1315	Thorndale City, Texas	0.0010633330%
TX1316	Thornton Town, Texas	0.0001800000%
TX1317	Thorntonville Town, Texas	0.0000580000%
TX1318	Thrall City, Texas	0.0005500000%

State ID	Qualifying Subdivision	Consolidated State Allocation
TX1319	Three Rivers City, Texas	0.0031126670%
TX1320	Throckmorton County, Texas	0.0037966670%
TX1321	Throckmorton Town, Texas	0.0000193330%
TX1322	Tiki Island Village, Texas	0.0014520000%
TX1323	Timbercreek Canyon Village, Texas	0.0002460000%
TX1324	Timpson City, Texas	0.0084280000%
TX1325	Tioga Town, Texas	0.0015933330%
TX1326	Tira Town, Texas	0.0001233330%
TX1327	Titus County, Texas	0.0470740000%
TX1328	Toco City, Texas	0.0000026670%
TX1329	Todd Mission City, Texas	0.0011200000%
TX1330	Tolar City, Texas	0.0015793330%
TX1331	Tom Bean City, Texas	0.0015286670%
TX1332	Tom Green County, Texas	0.1882846670%
TX1333	Tomball City, Texas	0.0230800000%
TX1334	Tool City, Texas	0.0098580000%
TX1335	Toyah Town, Texas	0.0000266670%
TX1336	Travis County, Texas	3.1356486670%
TX1337	Trent Town, Texas	0.0000420000%
TX1338	Trenton City, Texas	0.0020593330%
TX1339	Trinidad City, Texas	0.0039060000%
TX1340	Trinity City, Texas	0.0157680000%
TX1341	Trinity County, Texas	0.0705106670%
TX1342	Trophy Club Town, Texas	0.0195800000%
TX1343	Troup City, Texas	0.0052786670%
TX1344	Troy City, Texas	0.0035466670%
TX1345	Tulia City, Texas	0.0059406670%
TX1346	Turkey City, Texas	0.0004913330%
TX1347	Tuscola City, Texas	0.0000920000%
TX1348	Tye City, Texas	0.0011773330%
TX1349	Tyler City, Texas	0.4825526670%
TX1350	Tyler County, Texas	0.0878286670%
TX1351	Uhland City, Texas	0.0010300000%
TX1352	Uncertain City, Texas	0.0001233330%
TX1353	Union Grove City, Texas	0.0006626670%
TX1354	Union Valley City, Texas	0.0004440000%
TX1355	Universal City, Texas	0.0189520000%
TX1356	University Park City, Texas	0.0338886670%
TX1357	Upshur County, Texas	0.0855333330%
TX1358	Upton County, Texas	0.0056660000%
TX1359	Uvalde City, Texas	0.0122926670%
TX1360	Uvalde County, Texas	0.0241626670%
TX1361	Val Verde County, Texas	0.0785433330%
TX1362	Valentine Town, Texas	0.0001380000%
TX1363	Valley Mills City, Texas	0.0014853330%
TX1364	Valley View City, Texas	0.0012160000%
TX1365	Van Alstyne City, Texas	0.0291660000%
TX1366	Van City, Texas	0.0041373330%

State ID	Qualifying Subdivision	Consolidated State Allocation
TX1367	Van Horn Town, Texas	0.0001406670%
TX1368	Van Zandt County, Texas	0.1658313330%
TX1369	Vega City, Texas	0.0006493330%
TX1370	Venus Town, Texas	0.0065280000%
TX1371	Vernon City, Texas	0.0542246670%
TX1372	Victoria City, Texas	0.0563986670%
TX1373	Victoria County, Texas	0.3472573330%
TX1374	Vidor City, Texas	0.0637466670%
TX1375	Vinton Village, Texas	0.0004146670%
TX1376	Volente Village, Texas	0.0002220000%
TX1377	Von Ormy City, Texas	0.0003420000%
TX1378	Waco City, Texas	0.3413380000%
TX1379	Waelder City, Texas	0.0022846670%
TX1380	Wake Village City, Texas	0.0001160000%
TX1381	Walker County, Texas	0.1230826670%
TX1382	Waller City, Texas	0.0075300000%
TX1383	Waller County, Texas	0.0841373330%
TX1384	Wallis City, Texas	0.0017986670%
TX1385	Walnut Springs City, Texas	0.0001220000%
TX1386	Ward County, Texas	0.0452800000%
TX1387	Warren City, Texas	0.0000440000%
TX1388	Washington County, Texas	0.0558180000%
TX1389	Waskom City, Texas	0.0035640000%
TX1390	Watauga City, Texas	0.0221440000%
TX1391	Waxahachie City, Texas	0.1013960000%
TX1392	Weatherford City, Texas	0.1385813330%
TX1393	Webb County, Texas	0.3368693330%
TX1394	Webberville Village, Texas	0.0008533330%
TX1395	Webster City, Texas	0.0354680000%
TX1396	Weimar City, Texas	0.0038866670%
TX1397	Weinert City, Texas	0.0001560000%
TX1398	Weir City, Texas	0.0002953330%
TX1399	Wellington City, Texas	0.0060740000%
TX1400	Wellman City, Texas	0.0002553330%
TX1401	Wells Town, Texas	0.0009046670%
TX1402	Weslaco City, Texas	0.0492993330%
TX1403	West City, Texas	0.0023480000%
TX1404	West Columbia City, Texas	0.0119720000%
TX1405	West Lake Hills City, Texas	0.0113706670%
TX1406	West Orange City, Texas	0.0283013330%
TX1407	West Tawakoni City, Texas	0.0046633330%
TX1408	West University Place City, Texas	0.0231146670%
TX1409	Westbrook City, Texas	0.0000286670%
TX1410	Westlake Town, Texas	0.0276933330%
TX1411	Weston City, Texas	0.0001773330%
TX1412	Weston Lakes City, Texas	0.0001260000%
TX1413	Westover Hills Town, Texas	0.0030060000%
TX1414	Westworth Village City, Texas	0.0052280000%
TX1415	Wharton City, Texas	0.0211333330%

State ID	Qualifying Subdivision	Consolidated State Allocation
TX1416	Wharton County, Texas	0.0485913330%
TX1417	Wheeler City, Texas	0.0002980000%
TX1418	Wheeler County, Texas	0.0175153330%
TX1419	White Deer Town, Texas	0.0008486670%
TX1420	White Oak City, Texas	0.0102033330%
TX1421	White Settlement City, Texas	0.0155360000%
TX1422	Whiteface Town, Texas	0.0001033330%
TX1423	Whitehouse City, Texas	0.0193446670%
TX1424	Whitesboro City, Texas	0.0126213330%
TX1425	Whitewright Town, Texas	0.0047320000%
TX1426	Whitney Town, Texas	0.0000486670%
TX1427	Wichita County, Texas	0.3682473330%
TX1428	Wichita Falls City, Texas	0.5550493330%
TX1429	Wickett Town, Texas	0.0000580000%
TX1430	Wilbarger County, Texas	0.0367493330%
TX1431	Willacy County, Texas	0.0163873330%
TX1432	Williamson County, Texas	0.7973246670%
TX1433	Willis City, Texas	0.0162560000%
TX1434	Willow Park City, Texas	0.0178246670%
TX1435	Wills Point City, Texas	0.0291766670%
TX1436	Wilmer City, Texas	0.0002840000%
TX1437	Wilson City, Texas	0.0000080000%
TX1438	Wilson County, Texas	0.0806893330%
TX1439	Wimberley City, Texas	0.0004826670%
TX1440	Windcrest City, Texas	0.0086053330%
TX1441	Windom Town, Texas	0.0007246670%
TX1442	Windthorst Town, Texas	0.0022566670%
TX1443	Winfield City, Texas	0.0001933330%
TX1444	Wink City, Texas	0.0000800000%
TX1445	Winkler County, Texas	0.0407753330%
TX1446	Winnsboro City, Texas	0.0191940000%
TX1447	Winona Town, Texas	0.0002126670%
TX1448	Winters City, Texas	0.0041526670%
TX1449	Wise County, Texas	0.1927160000%
TX1450	Wixon Valley City, Texas	0.0002940000%
TX1451	Wolfe City, Texas	0.0036440000%
TX1452	Wolfforth City, Texas	0.0026813330%
TX1453	Wood County, Texas	0.1780320000%
TX1454	Woodbranch City, Texas	0.0064113330%
TX1455	Woodcreek City, Texas	0.0002386670%
TX1456	Woodloch Town, Texas	0.0006746670%
TX1457	Woodsboro Town, Texas	0.0007533330%
TX1458	Woodson Town, Texas	0.0000813330%
TX1459	Woodville Town, Texas	0.0135600000%
TX1460	Woodway City, Texas	0.0171420000%
TX1461	Wortham Town, Texas	0.0002506670%
TX1462	Wylie City, Texas	0.0764720000%
TX1463	Yantis Town, Texas	0.0013813330%
TX1464	Yoakum City, Texas	0.0134733330%

State ID	Qualifying Subdivision	Consolidated State Allocation
TX1465	Yoakum County, Texas	0.0232826670%
TX1466	Yorktown City, Texas	0.0036313330%
TX1467	Young County, Texas	0.0294133330%
TX1468	Zapata County, Texas	0.0376533330%
TX1469	Zavala County, Texas	0.0254313330%
TX1470	Zavalla City, Texas	0.0007253330%

State ID	Qualifying Subdivision	Consolidated State Allocation
UT3	Beaver County, Utah	0.2280000000%
UT6	Box Elder County, Utah	1.4640000000%
UT8	Cache County, Utah	2.6490000000%
UT9	Carbon County, Utah	2.7180000000%
UT16	Daggett County, Utah	0.0280000000%
UT17	Davis County, Utah	8.6950000000%
UT19	Duchesne County, Utah	0.6410000000%
UT21	Emery County, Utah	0.9380000000%
UT23	Garfield County, Utah	0.1470000000%
UT24	Grand County, Utah	0.3040000000%
UT31	Iron County, Utah	1.6220000000%
UT32	Juab County, Utah	0.3520000000%
UT33	Kane County, Utah	0.4390000000%
UT41	Millard County, Utah	0.3550000000%
UT42	Morgan County, Utah	0.2160000000%
UT50	Piute County, Utah	0.0220000000%
UT54	Rich County, Utah	0.0610000000%
UT58	Salt Lake County, Utah	42.2710000000%
UT59	San Juan County, Utah	0.2490000000%
UT61	Sanpete County, Utah	1.0130000000%
UT64	Sevier County, Utah	0.6610000000%
UT72	Summit County, Utah	0.9440000000%
UT76	Tooele County, Utah	2.2330000000%
UT77	Uintah County, Utah	0.8660000000%
UT78	Utah County, Utah	15.4260000000%
UT81	Wasatch County, Utah	0.6010000000%
UT83	Washington County, Utah	4.8650000000%
UT84	Wayne County, Utah	0.1090000000%
UT85	Weber County, Utah	9.8830000000%

State ID	Qualifying Subdivision	Consolidated State Allocation
VT1	Addison County, Vermont	0.7355948910%
VT2	Albany Town, Vermont	0.0345075405%
VT3	Albany Village, Vermont	0.0160668267%
VT4	Alburgh Town, Vermont	0.0606145322%
VT5	Alburgh Village, Vermont	0.0525580527%
VT6	Andover Town, Vermont	0.0012398034%
VT7	Arlington Town, Vermont	0.0885559202%
VT8	Athens Town, Vermont	0.0006484140%
VT9	Bakersfield Town, Vermont	0.0549127180%
VT10	Baltimore Town, Vermont	0.0024796068%
VT11	Barnard Town, Vermont	0.0830636232%
VT12	Barnet Town, Vermont	0.0471074029%
VT13	Barre City, Vermont	2.1256028600%
VT14	Barre Town, Vermont	1.3320832015%
VT15	Barton Town, Vermont	0.3252065150%
VT16	Barton Village, Vermont	0.0324162133%
VT17	Bellows Falls Village, Vermont	0.9422159742%
VT18	Belvidere Town, Vermont	0.0049931720%
VT19	Bennington County, Vermont	0.9901518348%
VT20	Bennington Town, Vermont	2.4851413569%
VT21	Benson Town, Vermont	0.0225970986%
VT22	Berlin Town, Vermont	0.5526473249%
VT23	Bethel Town, Vermont	0.0892626402%
VT24	Bloomfield Town, Vermont	0.0119245379%
VT25	Bolton Town, Vermont	0.1874031696%
VT26	Bradford Town, Vermont	0.7724442824%
VT27	Braintree Town, Vermont	0.0619908100%
VT28	Brandon Town, Vermont	0.5039156835%
VT29	Brattleboro Town, Vermont	2.8616648398%
VT30	Bridgewater Town, Vermont	0.2045592293%
VT31	Bridport Town, Vermont	0.0525426753%
VT32	Brighton Town, Vermont	0.1371312246%
VT33	Bristol Town, Vermont	0.4536168281%
VT34	Brookfield Town, Vermont	0.0181094589%
VT35	Brookline Town, Vermont	0.0142663887%
VT36	Brownington Town, Vermont	0.0209132726%
VT37	Brunswick Town, Vermont	0.0071549790%
VT38	Burke Town, Vermont	0.0035553845%
VT39	Burlington City, Vermont	10.6984139884%
VT40	Cabot Town, Vermont	0.0223388863%
VT41	Calais Town, Vermont	0.0461347819%
VT42	Caledonia County, Vermont	0.8505961058%
VT43	Cambridge Town, Vermont	0.0682410850%
VT44	Cambridge Village, Vermont	0.0012481328%
VT45	Canaan Town, Vermont	0.1359388349%
VT46	Castleton Town, Vermont	0.4255786906%
VT47	Cavendish Town, Vermont	0.0216955982%
VT48	Charleston Town, Vermont	0.0460098405%
VT49	Charlotte Town, Vermont	0.2587947007%

State ID	Qualifying Subdivision	Consolidated State Allocation
VT50	Chelsea Town, Vermont	0.0097511978%
VT51	Chester Town, Vermont	0.3719262791%
VT52	Chittenden County, Vermont	0.6721150355%
VT53	Chittenden Town, Vermont	0.0203372606%
VT54	Clarendon Town, Vermont	0.0632716198%
VT55	Colchester Town, Vermont	2.5489633597%
VT56	Concord Town, Vermont	0.0166940968%
VT57	Corinth Town, Vermont	0.0626872784%
VT58	Cornwall Town, Vermont	0.0577966224%
VT59	Coventry Town, Vermont	0.0376445314%
VT60	Craftsbury Town, Vermont	0.0501924950%
VT61	Danby Town, Vermont	0.0082858591%
VT62	Danville Town, Vermont	0.0302198071%
VT63	Derby Center Village, Vermont	0.0488117321%
VT64	Derby Line Village, Vermont	0.0549242511%
VT65	Derby Town, Vermont	0.5855806035%
VT66	Dorset Town, Vermont	0.0697288490%
VT67	Dover Town, Vermont	0.6426262960%
VT68	Dummerston Town, Vermont	0.0577133282%
VT69	East Haven Town, Vermont	0.0107321482%
VT70	East Montpelier Town, Vermont	0.1121807421%
VT71	Eden Town, Vermont	0.0299596726%
VT72	Elmore Town, Vermont	0.0195568572%
VT73	Enosburg Falls Village, Vermont	0.0515847910%
VT74	Enosburgh Town, Vermont	0.0873609676%
VT75	Essex County, Vermont	0.3791972294%
VT76	Essex Junction Village, Vermont	0.1451319610%
VT77	Essex Town, Vermont	1.8402135758%
VT78	Fair Haven Town, Vermont	0.3879168595%
VT79	Fairfax Town, Vermont	0.1256334098%
VT80	Fairfield Town, Vermont	0.0981770508%
VT81	Fairlee Town, Vermont	0.0592042959%
VT82	Fayston Town, Vermont	0.0053417265%
VT83	Ferrisburgh Town, Vermont	0.1296046250%
VT84	Fletcher Town, Vermont	0.0216321664%
VT85	Franklin County, Vermont	1.4110871894%
VT86	Franklin Town, Vermont	0.0432643327%
VT87	Georgia Town, Vermont	0.2512668196%
VT88	Goshen Town, Vermont	0.0148872515%
VT89	Grafton Town, Vermont	0.0220479971%
VT90	Grand Isle County, Vermont	0.4312958821%
VT91	Grand Isle Town, Vermont	0.1561992085%
VT92	Granville Town, Vermont	0.0131355086%
VT93	Greensboro Town, Vermont	0.2645567430%
VT94	Groton Town, Vermont	0.0719938128%
VT95	Guildhall Town, Vermont	0.0155017070%
VT96	Guilford Town, Vermont	0.0032420698%
VT97	Halifax Town, Vermont	0.0155632167%
VT98	Hancock Town, Vermont	0.0534179060%

State ID	Qualifying Subdivision	Consolidated State Allocation
VT99	Hardwick Town, Vermont	0.7839350493%
VT100	Hartford Town, Vermont	3.2053851113%
VT101	Hartland Town, Vermont	0.0483504099%
VT102	Highgate Town, Vermont	0.2362905072%
VT103	Hinesburg Town, Vermont	0.2869757200%
VT104	Holland Town, Vermont	0.0010456636%
VT105	Hubbardton Town, Vermont	0.0632716198%
VT106	Huntington Town, Vermont	0.0422712086%
VT107	Hyde Park Town, Vermont	0.0374497510%
VT108	Hyde Park Village, Vermont	0.0025481644%
VT109	Ira Town, Vermont	0.0067788733%
VT110	Irasburg Town, Vermont	0.0909740173%
VT111	Isle La Motte Town, Vermont	0.0520666164%
VT112	Jacksonville Village, Vermont	0.0061977355%
VT113	Jamaica Town, Vermont	0.0259384809%
VT114	Jay Town, Vermont	0.0031369909%
VT115	Jeffersonville Village, Vermont	0.0039462269%
VT116	Jericho Town, Vermont	0.0422712086%
VT117	Johnson Town, Vermont	0.2812873611%
VT118	Johnson Village, Vermont	0.1616364031%
VT119	Killington Town, Vermont	0.2124125988%
VT120	Kirby Town, Vermont	0.0008886859%
VT121	Lamoille County, Vermont	1.1151624597%
VT122	Landgrove Town, Vermont	0.0125511672%
VT123	Leicester Town, Vermont	0.0481639588%
VT124	Lincoln Town, Vermont	0.0718080025%
VT125	Londonderry Town, Vermont	0.0382589870%
VT126	Lowell Town, Vermont	0.0481011678%
VT127	Ludlow Town, Vermont	0.7209171567%
VT128	Ludlow Village, Vermont	0.2940730337%
VT129	Lunenburg Town, Vermont	0.0965880521%
VT130	Lyndon Town, Vermont	0.4559618826%
VT131	Lyndonville Village, Vermont	0.0079994549%
VT132	Maidstone Town, Vermont	0.0214642963%
VT133	Manchester Town, Vermont	0.6972897719%
VT134	Manchester Village, Vermont	0.0076701221%
VT135	Marlboro Town, Vermont	0.0129695608%
VT136	Marshfield Town, Vermont	0.0174828296%
VT137	Marshfield Village, Vermont	0.0171445266%
VT138	Mendon Town, Vermont	0.0971672678%
VT139	Middlebury Town, Vermont	1.3520936922%
VT140	Middlesex Town, Vermont	0.0165114901%
VT141	Middletown Springs Town, Vermont	0.0587525845%
VT142	Milton Town, Vermont	0.9332579943%
VT143	Monkton Town, Vermont	0.0210170701%
VT144	Montgomery Town, Vermont	0.0432643327%
VT145	Montpelier City, Vermont	2.1358012840%
VT146	Moretown, Vermont	0.0140831413%

State ID	Qualifying Subdivision	Consolidated State Allocation
VT147	Morgan Town, Vermont	0.0271878951%
VT148	Morristown, Vermont	0.5887893556%
VT149	Morrisville Village, Vermont	0.2266450291%
VT150	Mount Holly Town, Vermont	0.0918947396%
VT151	Mount Tabor Town, Vermont	0.0241034437%
VT152	New Haven Town, Vermont	0.1313563678%
VT153	Newbury Town, Vermont	0.0536325490%
VT154	Newbury Village, Vermont	0.0020894051%
VT155	Newfane Town, Vermont	0.0603069840%
VT156	Newfane Village, Vermont	0.0032420698%
VT157	Newport City, Vermont	1.2443589426%
VT158	Newport Town, Vermont	0.5761696308%
VT159	North Bennington Village, Vermont	0.1073823506%
VT160	North Hero Town, Vermont	0.0916986776%
VT161	North Troy Village, Vermont	0.0345075405%
VT162	Northfield Town, Vermont	0.5366215046%
VT163	Norton Town, Vermont	0.0131169276%
VT164	Norwich Town, Vermont	0.4866039276%
VT165	Old Bennington Village, Vermont	0.0014256137%
VT166	Orange County, Vermont	0.5836866196%
VT167	Orange Town, Vermont	0.0271641883%
VT168	Orleans County, Vermont	0.4475510820%
VT169	Orleans Village, Vermont	0.1150249216%
VT170	Orwell Town, Vermont	0.0350284502%
VT171	Panton Town, Vermont	0.0402823974%
VT172	Pawlet Town, Vermont	0.0497138732%
VT173	Peacham Town, Vermont	0.0373299353%
VT174	Perkinsville Village, Vermont	0.0463135443%
VT175	Peru Town, Vermont	0.0034861862%
VT176	Pittsfield Town, Vermont	0.0090387113%
VT177	Pittsford Town, Vermont	0.2538406130%
VT178	Plainfield Town, Vermont	0.0684736682%
VT179	Plymouth Town, Vermont	0.0681866233%
VT180	Pomfret Town, Vermont	0.0750052216%
VT181	Poultney Town, Vermont	0.1634522185%
VT182	Poultney Village, Vermont	0.3218151562%
VT183	Pownal Town, Vermont	0.1568905511%
VT184	Proctor Town, Vermont	0.1581796903%
VT185	Putney Town, Vermont	0.1348803568%
VT186	Randolph Town, Vermont	1.0482675385%
VT187	Reading Town, Vermont	0.0006195813%
VT188	Readsboro Town, Vermont	0.0495075597%
VT189	Richford Town, Vermont	0.3377954850%
VT190	Richmond Town, Vermont	0.3085809759%
VT191	Ripton Town, Vermont	0.0402823974%
VT192	Rochester Town, Vermont	0.1090982129%
VT193	Rockingham Town, Vermont	0.4824558723%
VT194	Roxbury Town, Vermont	0.0082557450%

State ID	Qualifying Subdivision	Consolidated State Allocation
VT195	Royalton Town, Vermont	0.1989804344%
VT196	Rutland City, Vermont	6.2978142029%
VT197	Rutland County, Vermont	1.5426293676%
VT198	Rutland Town, Vermont	0.3201255637%
VT199	Ryegate Town, Vermont	0.0515514733%
VT200	Salisbury Town, Vermont	0.0271468887%
VT201	Sandgate Town, Vermont	0.0257994435%
VT202	Saxtons River Village, Vermont	0.0156375408%
VT203	Searsburg Town, Vermont	0.0118540581%
VT204	Shaftsbury Town, Vermont	0.0697288490%
VT205	Sharon Town, Vermont	0.1462910330%
VT206	Sheffield Town, Vermont	0.0302198071%
VT207	Shelburne Town, Vermont	0.7838991687%
VT208	Sheldon Town, Vermont	0.1372817951%
VT209	Shoreham Town, Vermont	0.0359043216%
VT210	Shrewsbury Town, Vermont	0.0323893028%
VT211	South Burlington City, Vermont	4.2811506559%
VT212	South Hero Town, Vermont	0.0559519744%
VT213	Springfield Town, Vermont	2.0400160607%
VT214	St Albans Town, Vermont	0.7155280165%
VT215	St George Town, Vermont	0.0117419312%
VT216	St Johnsbury Town, Vermont	1.7171904807%
VT217	St. Albans City, Vermont	3.9012902759%
VT218	Stamford Town, Vermont	0.0495075597%
VT219	Stannard Town, Vermont	0.0017773719%
VT220	Starksboro Town, Vermont	0.0070056900%
VT221	Stockbridge Town, Vermont	0.0737654182%
VT222	Stowe Town, Vermont	0.9395659345%
VT223	Strafford Town, Vermont	0.0821896740%
VT224	Stratton Town, Vermont	0.1614672516%
VT225	Sudbury Town, Vermont	0.0135583873%
VT226	Sunderland Town, Vermont	0.0341673154%
VT227	Sutton Town, Vermont	0.0364412494%
VT228	Swanton Town, Vermont	0.1297936389%
VT229	Swanton Village, Vermont	0.5715903674%
VT230	Thetford Town, Vermont	0.2618926073%
VT231	Tinmouth Town, Vermont	0.0120520422%
VT232	Topsham Town, Vermont	0.0592042959%
VT233	Townshend Town, Vermont	0.0596585701%
VT234	Troy Town, Vermont	0.0365988678%
VT235	Underhill Town, Vermont	0.0897092257%
VT236	Vergennes City, Vermont	1.4746932678%
VT237	Vernon Town, Vermont	0.3196917927%
VT238	Vershire Town, Vermont	0.0006964684%
VT239	Victory Town, Vermont	0.0095397585%
VT240	Waitsfield Town, Vermont	0.0485631307%
VT241	Walden Town, Vermont	0.0071107690%
VT242	Wallingford Town, Vermont	0.0165710775%
VT243	Waltham Town, Vermont	0.0201411987%

State ID	Qualifying Subdivision	Consolidated State Allocation
VT244	Warren Town, Vermont	0.0480774609%
VT245	Washington County, Vermont	0.9081281087%
VT246	Washington Town, Vermont	0.0529360806%
VT247	Waterbury Town, Vermont	0.4584350821%
VT248	Waterford Town, Vermont	0.0577729156%
VT249	Waterville Town, Vermont	0.0004158307%
VT250	Weathersfield Town, Vermont	0.1692264346%
VT251	Wells River Village, Vermont	0.1107474397%
VT252	Wells Town, Vermont	0.0444407043%
VT253	West Burke Village, Vermont	0.0017773719%
VT254	West Fairlee Town, Vermont	0.0090547294%
VT255	West Haven Town, Vermont	0.0090387113%
VT256	West Rutland Town, Vermont	0.1212713522%
VT257	West Windsor Town, Vermont	0.0210760168%
VT258	Westfield Town, Vermont	0.0250965679%
VT259	Westford Town, Vermont	0.0657557117%
VT260	Westminster Town, Vermont	0.0752217867%
VT261	Westminster Village, Vermont	0.0079763888%
VT262	Westmore Town, Vermont	0.0365988678%
VT263	Weston Town, Vermont	0.0291344185%
VT264	Weybridge Town, Vermont	0.0245199151%
VT265	Wheelock Town, Vermont	0.0222203522%
VT266	Whiting Town, Vermont	0.0026269736%
VT267	Whitingham Town, Vermont	0.0901365894%
VT268	Williston Town, Vermont	1.4048183334%
VT269	Wilmington Town, Vermont	0.4344700351%
VT270	Windham County, Vermont	0.7048785219%
VT271	Windham Town, Vermont	0.0155632167%
VT272	Windsor County, Vermont	0.7909631647%
VT273	Windsor Town, Vermont	1.5118803214%
VT274	Winhall Town, Vermont	0.3772340472%
VT275	Winooski City, Vermont	1.3620774732%
VT276	Wolcott Town, Vermont	0.0337047118%
VT277	Woodbury Town, Vermont	0.0267099141%
VT278	Woodford Town, Vermont	0.0383512514%
VT279	Woodstock Town, Vermont	0.5151181240%
VT280	Woodstock Village, Vermont	0.3241960913%
VT281	Worcester Town, Vermont	0.0233102258%

State ID	Qualifying Subdivision	Consolidated State Allocation
VA1	Accomack County, Virginia	0.3480034800%
VA2	Albemarle County, Virginia	0.8630086301%
VA3	Alexandria City, Virginia	1.1620116201%
VA4	Alleghany County, Virginia	0.2130021300%
VA5	Amelia County, Virginia	0.1000010000%
VA6	Amherst County, Virginia	0.2990029900%
VA7	Appomattox County, Virginia	0.1330013300%
VA8	Arlington County, Virginia	1.3780137801%
VA9	Augusta County, Virginia	0.8350083501%
VA10	Bath County, Virginia	0.0370003700%
VA11	Bedford County, Virginia	0.7770077701%
VA12	Bland County, Virginia	0.1470014700%
VA13	Botetourt County, Virginia	0.3620036200%
VA14	Bristol City, Virginia	0.4340043400%
VA15	Brunswick County, Virginia	0.1070010700%
VA16	Buchanan County, Virginia	0.9290092901%
VA17	Buckingham County, Virginia	0.1270012700%
VA18	Buena Vista City, Virginia	0.0780007800%
VA19	Campbell County, Virginia	0.4560045600%
VA20	Caroline County, Virginia	0.3180031800%
VA21	Carroll County, Virginia	0.4400044000%
VA22	Charles City County, Virginia	0.0730007300%
VA23	Charlotte County, Virginia	0.1380013800%
VA24	Charlottesville City, Virginia	0.4630046300%
VA25	Chesapeake City, Virginia	2.9120291203%
VA26	Chesterfield County, Virginia	4.0880408804%
VA27	Clarke County, Virginia	0.1250012500%
VA28	Colonial Heights City, Virginia	0.2830028300%
VA29	Covington City, Virginia	0.1000010000%
VA30	Craig County, Virginia	0.0700007000%
VA31	Culpeper County, Virginia	0.7900079001%
VA32	Cumberland County, Virginia	0.1000010000%
VA33	Danville City, Virginia	0.6370063701%
VA34	Dickenson County, Virginia	0.9480094801%
VA35	Dinwiddie County, Virginia	0.1960019600%
VA36	Emporia City, Virginia	0.0500005000%
VA37	Essex County, Virginia	0.1010010100%
VA38	Fairfax City, Virginia	0.2690026900%
VA39	Fairfax County, Virginia	8.6720867209%
VA40	Falls Church City, Virginia	0.1020010200%
VA41	Fauquier County, Virginia	1.2100121001%
VA42	Floyd County, Virginia	0.1820018200%
VA43	Fluvanna County, Virginia	0.1940019400%
VA44	Franklin City, Virginia	0.0790007900%
VA45	Franklin County, Virginia	0.9540095401%
VA46	Frederick County, Virginia	1.2770127701%
VA47	Fredericksburg City, Virginia	0.5240052401%
VA48	Galax City, Virginia	0.1390013900%
VA49	Giles County, Virginia	0.4090040900%

State ID	Qualifying Subdivision	Consolidated State Allocation
VA50	Gloucester County, Virginia	0.4240042400%
VA51	Goochland County, Virginia	0.2250022500%
VA52	Grayson County, Virginia	0.2240022400%
VA53	Greene County, Virginia	0.1780017800%
VA54	Greensville County, Virginia	0.1240012400%
VA55	Halifax County, Virginia	0.3530035300%
VA56	Hampton City, Virginia	1.5380153802%
VA57	Hanover County, Virginia	1.0790107901%
VA58	Harrisonburg City, Virginia	0.5230052301%
VA59	Henrico County, Virginia	4.4730447304%
VA60	Henry County, Virginia	1.2200122001%
VA61	Highland County, Virginia	0.0230002300%
VA62	Hopewell City, Virginia	0.3440034400%
VA63	Isle of Wight County, Virginia	0.3560035600%
VA64	James City County, Virginia	0.6120061201%
VA65	King and Queen County, Virginia	0.0720007200%
VA66	King George County, Virginia	0.3060030600%
VA67	King William County, Virginia	0.1780017800%
VA68	Lancaster County, Virginia	0.1350013500%
VA69	Lee County, Virginia	0.5560055601%
VA70	Lexington City, Virginia	0.0930009300%
VA71	Loudoun County, Virginia	2.5670256703%
VA72	Louisa County, Virginia	0.4490044900%
VA73	Lunenburg County, Virginia	0.0880008800%
VA74	Lynchburg City, Virginia	0.8160081601%
VA75	Madison County, Virginia	0.1630016300%
VA76	Manassas City, Virginia	0.4520045200%
VA77	Manassas Park City, Virginia	0.0950009500%
VA78	Martinsville City, Virginia	0.4940049400%
VA79	Mathews County, Virginia	0.0880008800%
VA80	Mecklenburg County, Virginia	0.3440034400%
VA81	Middlesex County, Virginia	0.1080010800%
VA82	Montgomery County, Virginia	1.2050120501%
VA83	Nelson County, Virginia	0.1470014700%
VA84	New Kent County, Virginia	0.1560015600%
VA85	Newport News City, Virginia	2.0470204702%
VA86	Norfolk City, Virginia	3.3880338803%
VA87	Northampton County, Virginia	0.1220012200%
VA88	Northumberland County, Virginia	0.1290012900%
VA89	Norton City, Virginia	0.1100011000%
VA90	Nottoway County, Virginia	0.1330013300%
VA91	Orange County, Virginia	0.6380063801%
VA92	Page County, Virginia	0.4100041000%
VA93	Patrick County, Virginia	0.3290032900%
VA94	Petersburg City, Virginia	0.3950039500%
VA95	Pittsylvania County, Virginia	0.7500075001%
VA96	Poquoson City, Virginia	0.1860018600%
VA97	Portsmouth City, Virginia	1.9370193702%
VA98	Powhatan County, Virginia	0.2620026200%

State ID	Qualifying Subdivision	Consolidated State Allocation
VA99	Prince Edward County, Virginia	0.1900019000%
VA100	Prince George County, Virginia	0.3510035100%
VA101	Prince William County, Virginia	3.5560355604%
VA102	Pulaski County, Virginia	1.0610106101%
VA103	Radford City, Virginia	0.2470024700%
VA104	Rappahannock County, Virginia	0.0910009100%
VA105	Richmond City, Virginia	4.2250422504%
VA106	Richmond County, Virginia	0.0840008400%
VA107	Roanoke City, Virginia	1.8590185902%
VA108	Roanoke County, Virginia	1.4980149801%
VA109	Rockbridge County, Virginia	0.2350023500%
VA110	Rockingham County, Virginia	0.6140061401%
VA111	Russell County, Virginia	1.0640106401%
VA112	Salem City, Virginia	0.7860078601%
VA113	Scott County, Virginia	0.4210042100%
VA114	Shenandoah County, Virginia	0.6600066001%
VA115	Smyth County, Virginia	0.5920059201%
VA116	Southampton County, Virginia	0.1370013700%
VA117	Spotsylvania County, Virginia	1.4170141701%
VA118	Stafford County, Virginia	1.4430144301%
VA119	Staunton City, Virginia	0.4400044000%
VA120	Suffolk City, Virginia	0.7100071001%
VA121	Surry County, Virginia	0.0580005800%
VA122	Sussex County, Virginia	0.0810008100%
VA123	Tazewell County, Virginia	1.6060160602%
VA124	Virginia Beach City, Virginia	4.8590485905%
VA125	Warren County, Virginia	0.7660076601%
VA126	Washington County, Virginia	0.9960099601%
VA127	Waynesboro City, Virginia	0.3630036300%
VA128	Westmoreland County, Virginia	0.2230022300%
VA129	Williamsburg City, Virginia	0.0860008600%
VA130	Winchester City, Virginia	0.6490064901%
VA131	Wise County, Virginia	1.7560175602%
VA132	Wythe County, Virginia	0.6420064201%
VA133	York County, Virginia	0.5610056101%

State ID	Qualifying Subdivision	Consolidated State Allocation
WA1	Aberdeen City, Washington	0.2491525333%
WA2	Adams County, Washington	0.1638732475%
WA3	Anacortes City, Washington	0.1774962906%
WA4	Arlington City, Washington	0.2620524080%
WA5	Asotin County, Washington	0.4694498386%
WA6	Auburn City, Washington	0.3251297029%
WA7	Bainbridge Island City, Washington	0.1364686014%
WA8	Battle Ground City, Washington	0.1384729857%
WA9	Bellevue City, Washington	1.1300592573%
WA10	Bellingham City, Washington	0.8978614577%
WA11	Benton County, Washington	1.4848831892%
WA12	Bonney Lake City, Washington	0.1190773864%
WA13	Bothell City, Washington	0.4476161304%
WA14	Bremerton City, Washington	0.6193374389%
WA15	Burien City, Washington	0.0270962921%
WA16	Burlington City, Washington	0.1146861661%
WA17	Camas City, Washington	0.2691592724%
WA18	Centralia City, Washington	0.1909990353%
WA19	Chelan County, Washington	0.7434914485%
WA20	Cheney City, Washington	0.1238454349%
WA21	Clallam County, Washington	1.3076983401%
WA22	Clark County, Washington	4.5149775326%
WA23	Columbia County, Washington	0.0561699537%
WA24	Covington City, Washington	0.0118134406%
WA25	Cowlitz County, Washington	1.7226945990%
WA26	Des Moines City, Washington	0.1179764526%
WA27	Douglas County, Washington	0.3932175175%
WA28	East Wenatchee City, Washington	0.0799810865%
WA29	Edgewood City, Washington	0.0048016791%
WA30	Edmonds City, Washington	0.3058936009%
WA31	Ellensburg City, Washington	0.0955824915%
WA32	Enumclaw City, Washington	0.0537768326%
WA33	Everett City, Washington	1.9258363241%
WA34	Federal Way City, Washington	0.3061452240%
WA35	Ferndale City, Washington	0.0646101891%
WA36	Ferry County, Washington	0.1153487994%
WA37	Fife City, Washington	0.1955185481%
WA38	Franklin County, Washington	0.3361237144%
WA39	Garfield County, Washington	0.0321982209%
WA40	Gig Harbor City, Washington	0.0859963345%
WA41	Grandview City, Washington	0.0530606109%
WA42	Grant County, Washington	0.9932572167%
WA43	Grays Harbor County, Washington	0.9992429138%
WA44	Island County, Washington	0.6820422610%
WA45	Issaquah City, Washington	0.1876240107%
WA46	Jefferson County, Washington	0.4417137380%
WA47	Kelso City, Washington	0.1331145270%
WA48	Kenmore City, Washington	0.0204441024%

State ID	Qualifying Subdivision	Consolidated State Allocation
WA49	Kennewick City, Washington	0.5415650564%
WA50	Kent City, Washington	0.5377397676%
WA51	King County, Washington	13.9743722662%
WA52	Kirkland City, Washington	0.5453525246%
WA53	Kitsap County, Washington	2.6294133668%
WA54	Kittitas County, Washington	0.3855704683%
WA55	Klickitat County, Washington	0.2211673457%
WA56	Lacey City, Washington	0.2348627221%
WA57	Lake Forest Park City, Washington	0.0525439124%
WA58	Lake Stevens City, Washington	0.1385202891%
WA59	Lakewood City, Washington	0.5253640894%
WA60	Lewis County, Washington	1.0777377479%
WA61	Liberty Lake City, Washington	0.0389636519%
WA62	Lincoln County, Washington	0.1712669645%
WA63	Longview City, Washington	0.6162736905%
WA64	Lynden City, Washington	0.0827115612%
WA65	Lynnwood City, Washington	0.7704629214%
WA66	Maple Valley City, Washington	0.0093761587%
WA67	Marysville City, Washington	0.3945067827%
WA68	Mason County, Washington	0.8089918012%
WA69	Mercer Island City, Washington	0.1751797481%
WA70	Mill Creek City, Washington	0.1227939546%
WA71	Monroe City, Washington	0.1771621898%
WA72	Moses Lake City, Washington	0.2078293909%
WA73	Mount Vernon City, Washington	0.2801063665%
WA74	Mountlake Terrace City, Washington	0.2108935805%
WA75	Mukilteo City, Washington	0.2561790702%
WA76	Newcastle City, Washington	0.0033117880%
WA77	Oak Harbor City, Washington	0.2511550431%
WA78	Okanogan County, Washington	0.6145043345%
WA79	Olympia City, Washington	0.6039423385%
WA80	Pacific County, Washington	0.4895416466%
WA81	Pasco City, Washington	0.4278056066%
WA82	Pend Oreille County, Washington	0.2566374940%
WA83	Pierce County, Washington	7.2310164020%
WA84	Port Angeles City, Washington	0.4598370527%
WA85	Port Orchard City, Washington	0.1009497162%
WA86	Poulsbo City, Washington	0.0773748246%
WA87	Pullman City, Washington	0.2214837491%
WA88	Puyallup City, Washington	0.3845704814%
WA89	Redmond City, Washington	0.4839486007%
WA90	Renton City, Washington	0.7652626920%
WA91	Richland City, Washington	0.4756779517%
WA92	Sammamish City, Washington	0.0224369090%
WA93	San Juan County, Washington	0.2101495171%
WA94	Seatac City, Washington	0.1481551278%
WA95	Seattle City, Washington	6.6032403816%

State ID	Qualifying Subdivision	Consolidated State Allocation
WA96	Sedro-Woolley City, Washington	0.0661146351%
WA97	Shelton City, Washington	0.1239179888%
WA98	Shoreline City, Washington	0.0435834501%
WA99	Skagit County, Washington	1.0526023961%
WA100	Skamania County, Washington	0.1631931925%
WA101	Snohomish City, Washington	0.0861097964%
WA102	Snohomish County, Washington	6.9054415622%
WA103	Snoqualmie City, Washington	0.0649164481%
WA104	Spokane City, Washington	3.0872078287%
WA105	Spokane County, Washington	5.5623859292%
WA106	Spokane Valley City, Washington	0.0684217500%
WA107	Stevens County, Washington	0.7479240179%
WA108	Sumner City, Washington	0.1083157569%
WA109	Sunnyside City, Washington	0.1213478384%
WA110	Tacoma City, Washington	3.2816374617%
WA111	Thurston County, Washington	2.3258492094%
WA112	Tukwila City, Washington	0.3032205739%
WA113	Tumwater City, Washington	0.2065982350%
WA114	University Place City, Washington	0.0353733363%
WA115	Vancouver City, Washington	1.7306605325%
WA116	Wahkiakum County, Washington	0.0596582197%
WA117	Walla Walla City, Washington	0.3140768654%
WA118	Walla Walla County, Washington	0.5543870294%
WA119	Washougal City, Washington	0.1279328220%
WA120	Wenatchee City, Washington	0.2968333494%
WA121	West Richland City, Washington	0.0459360490%
WA122	Whatcom County, Washington	1.3452637306%
WA123	Whitman County, Washington	0.2626805837%
WA124	Woodinville City, Washington	0.0185516364%
WA125	Yakima City, Washington	0.6060410539%
WA126	Yakima County, Washington	1.9388392959%

State ID	Qualifying Subdivision	Consolidated State Allocation
WI1	Adams County, Wisconsin	0.3270000000%
WI4	Ashland County, Wisconsin	0.2250000000%
WI7	Barron County, Wisconsin	0.4780000000%
WI8	Bayfield County, Wisconsin	0.1240000000%
WI13	Brown County, Wisconsin	2.9000000000%
WI15	Buffalo County, Wisconsin	0.1260000000%
WI17	Burnett County, Wisconsin	0.2240000000%
WI19	Calumet County, Wisconsin	0.3860000000%
WI21	Chippewa County, Wisconsin	0.6960000000%
WI23	Clark County, Wisconsin	0.2610000000%
WI24	Columbia County, Wisconsin	1.0760000000%
WI25	Crawford County, Wisconsin	0.1950000000%
WI26	Cudahy City, Wisconsin	0.0870000000%
WI27	Dane County, Wisconsin	8.2480000000%
WI30	Dodge County, Wisconsin	1.3020000000%
WI31	Door County, Wisconsin	0.2820000000%
WI32	Douglas County, Wisconsin	0.5540000000%
WI33	Dunn County, Wisconsin	0.4420000000%
WI35	Eau Claire County, Wisconsin	1.1770000000%
WI38	Florence County, Wisconsin	0.0530000000%
WI40	Fond Du Lac County, Wisconsin	1.1960000000%
WI41	Forest County, Wisconsin	0.1270000000%
WI43	Franklin City, Wisconsin	0.1550000000%
WI48	Grant County, Wisconsin	0.4980000000%
WI50	Green County, Wisconsin	0.4660000000%
WI51	Green Lake County, Wisconsin	0.2800000000%
WI53	Greenfield City, Wisconsin	0.1630000000%
WI61	Iowa County, Wisconsin	0.2790000000%
WI62	Iron County, Wisconsin	0.0610000000%
WI63	Jackson County, Wisconsin	0.2360000000%
WI65	Jefferson County, Wisconsin	1.0510000000%
WI66	Juneau County, Wisconsin	0.4380000000%
WI68	Kenosha City, Wisconsin	0.4840000000%
WI69	Kenosha County, Wisconsin	3.7120000000%
WI70	Kewaunee County, Wisconsin	0.1560000000%
WI72	La Crosse County, Wisconsin	1.6490000000%
WI73	Lafayette County, Wisconsin	0.1340000000%
WI74	Langlade County, Wisconsin	0.3120000000%
WI75	Lincoln County, Wisconsin	0.3500000000%
WI80	Manitowoc County, Wisconsin	1.4030000000%
WI81	Marathon County, Wisconsin	1.2590000000%
WI82	Marinette City, Wisconsin	0.0320000000%
WI83	Marinette County, Wisconsin	0.5030000000%
WI84	Marquette County, Wisconsin	0.2460000000%
WI87	Menominee County, Wisconsin	0.0800000000%
WI92	Milwaukee City, Wisconsin	7.8150000000%
WI93	Milwaukee County, Wisconsin	25.2210000000%
WI95	Monroe County, Wisconsin	0.6550000000%

State ID	Qualifying Subdivision	Consolidated State Allocation
WI96	Mount Pleasant Village, Wisconsin	0.1170000000%
WI100	Oak Creek City, Wisconsin	0.1660000000%
WI102	Oconto County, Wisconsin	0.3360000000%
WI104	Oneida County, Wisconsin	0.5260000000%
WI107	Outagamie County, Wisconsin	1.8360000000%
WI108	Ozaukee County, Wisconsin	1.0360000000%
WI109	Pepin County, Wisconsin	0.0550000000%
WI111	Pierce County, Wisconsin	0.3870000000%
WI113	Pleasant Prairie Village, Wisconsin	0.0590000000%
WI118	Portage County, Wisconsin	0.7290000000%
WI119	Price County, Wisconsin	0.1490000000%
WI121	Racine County, Wisconsin	3.2080000000%
WI123	Richland County, Wisconsin	0.2180000000%
WI125	Rock County, Wisconsin	2.9470000000%
WI126	Rusk County, Wisconsin	0.1590000000%
WI128	Sauk County, Wisconsin	1.2260000000%
WI129	Sawyer County, Wisconsin	0.2580000000%
WI130	Shawano County, Wisconsin	0.4180000000%
WI132	Sheboygan County, Wisconsin	1.4100000000%
WI134	South Milwaukee City, Wisconsin	0.0960000000%
WI135	St Croix County, Wisconsin	0.8290000000%
WI138	Sturtevant Village, Wisconsin	0.0180000000%
WI141	Superior City, Wisconsin	0.0890000000%
WI143	Taylor County, Wisconsin	0.1590000000%
WI145	Trempealeau County, Wisconsin	0.3200000000%
WI147	Union Grove Village, Wisconsin	0.0070000000%
WI148	Vernon County, Wisconsin	0.3220000000%
WI150	Vilas County, Wisconsin	0.4680000000%
WI151	Walworth County, Wisconsin	1.5730000000%
WI152	Washburn County, Wisconsin	0.1850000000%
WI153	Washington County, Wisconsin	1.9910000000%
WI156	Waukesha County, Wisconsin	6.0350000000%
WI158	Waupaca County, Wisconsin	0.6060000000%
WI161	Waushara County, Wisconsin	0.2310000000%
WI162	Wauwatosa City, Wisconsin	0.3090000000%
WI163	West Allis City, Wisconsin	0.3780000000%
WI168	Winnebago County, Wisconsin	2.1760000000%
WI170	Wood County, Wisconsin	0.8420000000%
WI171	Yorkville Town, Wisconsin	0.0020000000%

State ID	Qualifying Subdivision	Consolidated State Allocation
WY1	Albany County, Wyoming	1.6329876137%
WY2	Big Horn County, Wyoming	3.0324432485%
WY3	Campbell County, Wyoming	4.4393335213%
WY4	Carbon County, Wyoming	3.6968556043%
WY5	Casper City, Wyoming	7.3503611059%
WY6	Cheyenne City, Wyoming	1.2286265328%
WY7	Converse County, Wyoming	1.8962432493%
WY8	Crook County, Wyoming	0.5448669885%
WY9	Evanston City, Wyoming	1.9702405199%
WY10	Fremont County, Wyoming	6.7374838437%
WY11	Gillette City, Wyoming	1.7410635670%
WY12	Goshen County, Wyoming	1.6361202905%
WY13	Green River City, Wyoming	0.6122218672%
WY14	Hot Springs County, Wyoming	0.8557309329%
WY15	Jackson Town, Wyoming	0.5598544963%
WY16	Johnson County, Wyoming	0.9322427236%
WY17	Laramie City, Wyoming	3.4181078811%
WY18	Laramie County, Wyoming	15.5855269922%
WY19	Lincoln County, Wyoming	3.1228011914%
WY20	Natrona County, Wyoming	7.9000169472%
WY21	Niobrara County, Wyoming	0.1540280861%
WY22	Park County, Wyoming	5.7964268009%
WY23	Platte County, Wyoming	1.7507027157%
WY24	Riverton City, Wyoming	1.2744483314%
WY25	Rock Springs City, Wyoming	1.5261479738%
WY26	Sheridan City, Wyoming	0.3405187102%
WY27	Sheridan County, Wyoming	3.9149494912%
WY28	Sublette County, Wyoming	0.7136740477%
WY29	Sweetwater County, Wyoming	7.6391306020%
WY30	Teton County, Wyoming	1.3290900349%
WY31	Uinta County, Wyoming	4.3911508108%
WY32	Washakie County, Wyoming	1.5007597928%
WY33	Weston County, Wyoming	0.7758434851%

EXHIBIT H

[Intentionally Omitted]

EXHIBIT I

Primary Subdivisions

1. Alabaster, City of, Alabama
2. Albertville, City of, Alabama
3. Alexander City, City of, Alabama
4. Anniston, City of, Alabama
5. Athens, City of, Alabama
6. Auburn, City of, Alabama
7. Autauga, County of, Alabama
8. Baldwin, County of, Alabama
9. Barbour, County of, Alabama
10. Bessemer, City of, Alabama
11. Bibb, County of, Alabama
12. Birmingham, City of, Alabama
13. Blount, County of, Alabama
14. Bullock, County of, Alabama
15. Butler, County of, Alabama
16. Calera, City of, Alabama
17. Calhoun, County of, Alabama
18. Center Point, City of, Alabama
19. Chambers, County of, Alabama
20. Chelsea, City of, Alabama
21. Cherokee, County of, Alabama
22. Chilton, County of, Alabama
23. Choctaw, County of, Alabama
24. Clarke, County of, Alabama
25. Clay, County of, Alabama
26. Cleburne, County of, Alabama
27. Coffee, County of, Alabama
28. Colbert, County of, Alabama
29. Conecuh, County of, Alabama
30. Coosa, County of, Alabama
31. Covington, County of, Alabama
32. Crenshaw, County of, Alabama
33. Cullman, City of, Alabama
34. Cullman, County of, Alabama
35. Dale, County of, Alabama
36. Dallas, County of, Alabama
37. Daphne, City of, Alabama
38. Decatur, City of, Alabama
39. DeKalb, County of, Alabama
40. Dothan, City of, Alabama
41. Elmore, County of, Alabama
42. Enterprise, City of, Alabama
43. Escambia, County of, Alabama
44. Etowah, County of, Alabama
45. Eufaula, City of, Alabama
46. Fairfield, City of, Alabama
47. Fairhope, City of, Alabama
48. Fayette, County of, Alabama
49. Florence, City of, Alabama
50. Foley, City of, Alabama
51. Fort Payne, City of, Alabama
52. Franklin, County of, Alabama
53. Gadsden, City of, Alabama
54. Gardendale, City of, Alabama
55. Geneva, County of, Alabama
56. Gulf Shores, City of, Alabama
57. Hale, County of, Alabama
58. Hartselle, City of, Alabama
59. Helena, City of, Alabama
60. Henry, County of, Alabama
61. Homewood, City of, Alabama
62. Hoover, City of, Alabama
63. Houston, County of, Alabama
64. Hueytown, City of, Alabama
65. Huntsville, City of, Alabama
66. Irondale, City of, Alabama
67. Jackson, County of, Alabama
68. Jacksonville, City of, Alabama
69. Jasper, City of, Alabama
70. Jefferson, County of, Alabama
71. Lamar, County of, Alabama
72. Lauderdale, County of, Alabama
73. Lawrence, County of, Alabama
74. Lee, County of, Alabama
75. Leeds, City of, Alabama
76. Limestone, County of, Alabama
77. Macon, County of, Alabama
78. Madison, City of, Alabama
79. Madison, County of, Alabama
80. Marengo, County of, Alabama
81. Marion, County of, Alabama
82. Marshall, County of, Alabama
83. Millbrook, City of, Alabama
84. Mobile, City of, Alabama
85. Mobile, County of, Alabama
86. Monroe, County of, Alabama

87. Montgomery, City of, Alabama
88. Montgomery, County of, Alabama
89. Moody, City of, Alabama
90. Morgan, County of, Alabama
91. Mountain Brook, City of, Alabama
92. Muscle Shoals, City of, Alabama
93. Northport, City of, Alabama
94. Opelika, City of, Alabama
95. Oxford, City of, Alabama
96. Ozark, City of, Alabama
97. Pelham, City of, Alabama
98. Pell City, City of, Alabama
99. Phenix City, City of, Alabama
100. Pickens, County of, Alabama
101. Pike, County of, Alabama
102. Pike Road, Town of, Alabama
103. Prattville, City of, Alabama
104. Prichard, City of, Alabama
105. Randolph, County of, Alabama
106. Russell, County of, Alabama
107. Saraland, City of, Alabama
108. Scottsboro, City of, Alabama
109. Selma, City of, Alabama
110. Shelby, County of, Alabama
111. St. Clair, County of, Alabama
112. Sumter, County of, Alabama
113. Sylacauga, City of, Alabama
114. Talladega, City of, Alabama
115. Talladega, County of, Alabama
116. Tallapoosa, County of, Alabama
117. Troy, City of, Alabama
118. Trussville, City of, Alabama
119. Tuscaloosa, City of, Alabama
120. Tuscaloosa, County of, Alabama
121. Vestavia Hills, City of, Alabama
122. Walker, County of, Alabama
123. Washington, County of, Alabama
124. Wilcox, County of, Alabama
125. Winston, County of, Alabama
126. Anchorage, Municipality of, Alaska
127. Fairbanks, City of, Alaska
128. Fairbanks North Star, Borough of, Alaska
129. Juneau, City of/ Borough of, Alaska
130. Kenai Peninsula, Borough of, Alaska
131. Ketchikan Gateway, Borough of, Alaska
132. Kodiak Island, Borough of, Alaska
133. Matanuska-Susitna, Borough of, Alaska
134. Wasilla, City of, Alaska
135. Apache, County of, Arizona
136. Apache Junction, City of, Arizona
137. Avondale, City of, Arizona
138. Buckeye, City of, Arizona
139. Bullhead City, City of, Arizona
140. Camp Verde, Town of, Arizona
141. Casa Grande, City of, Arizona
142. Chandler, City of, Arizona
143. Chino Valley, Town of, Arizona
144. Cochise, County of, Arizona
145. Coconino, County of, Arizona
146. Coolidge, City of, Arizona
147. Cottonwood, City of, Arizona
148. Douglas, City of, Arizona
149. El Mirage, City of, Arizona
150. Eloy, City of, Arizona
151. Flagstaff, City of, Arizona
152. Florence, Town of, Arizona
153. Fountain Hills, Town of, Arizona
154. Gila, County of, Arizona
155. Gilbert, Town of, Arizona
156. Glendale, City of, Arizona
157. Goodyear, City of, Arizona
158. Graham, County of, Arizona
159. Kingman, City of, Arizona
160. La Paz, County of, Arizona
161. Lake Havasu City, City of, Arizona
162. Marana, Town of, Arizona
163. Maricopa, City of, Arizona
164. Maricopa, County of, Arizona
165. Mesa, City of, Arizona
166. Mohave, County of, Arizona
167. Navajo, County of, Arizona
168. Nogales, City of, Arizona
169. Oro Valley, Town of, Arizona
170. Paradise Valley, Town of, Arizona
171. Payson, Town of, Arizona
172. Peoria, City of, Arizona
173. Phoenix, City of, Arizona
174. Pima, County of, Arizona

175. Pinal, County of, Arizona
176. Prescott, City of, Arizona
177. Prescott Valley, Town of, Arizona
178. Queen Creek, Town of, Arizona
179. Sahuarita, Town of, Arizona
180. San Luis, City of, Arizona
181. Santa Cruz, County of, Arizona
182. Scottsdale, City of, Arizona
183. Sedona, City of, Arizona
184. Show Low, City of, Arizona
185. Sierra Vista, City of, Arizona
186. Somerton, City of, Arizona
187. Surprise, City of, Arizona
188. Tempe, City of, Arizona
189. Tucson, City of, Arizona
190. Yavapai, County of, Arizona
191. Yuma, City of, Arizona
192. Yuma, County of, Arizona
193. Arkadelphia, City of, Arkansas
194. Arkansas, County of, Arkansas
195. Ashley, County of, Arkansas
196. Batesville, City of, Arkansas
197. Baxter, County of, Arkansas
198. Bella Vista, City of, Arkansas
199. Benton, City of, Arkansas
200. Benton, County of, Arkansas
201. Bentonville, City of, Arkansas
202. Blytheville, City of, Arkansas
203. Boone, County of, Arkansas
204. Bradley, County of, Arkansas
205. Bryant, City of, Arkansas
206. Cabot, City of, Arkansas
207. Camden, City of, Arkansas
208. Carroll, County of, Arkansas
209. Centerton, City of, Arkansas
210. Chicot, County of, Arkansas
211. Clark, County of, Arkansas
212. Clay, County of, Arkansas
213. Cleburne, County of, Arkansas
214. Columbia, County of, Arkansas
215. Conway, City of, Arkansas
216. Conway, County of, Arkansas
217. Craighead, County of, Arkansas
218. Crawford, County of, Arkansas
219. Crittenden, County of, Arkansas
220. Cross, County of, Arkansas
221. Desha, County of, Arkansas
222. Drew, County of, Arkansas
223. El Dorado, City of, Arkansas
224. Faulkner, County of, Arkansas
225. Fayetteville, City of, Arkansas
226. Forrest City, City of, Arkansas
227. Fort Smith, City of, Arkansas
228. Franklin, County of, Arkansas
229. Fulton, County of, Arkansas
230. Garland, County of, Arkansas
231. Grant, County of, Arkansas
232. Greene, County of, Arkansas
233. Harrison, City of, Arkansas
234. Helena-West Helena, City of, Arkansas
235. Hempstead, County of, Arkansas
236. Hot Spring, County of, Arkansas
237. Hot Springs, City of, Arkansas
238. Howard, County of, Arkansas
239. Independence, County of, Arkansas
240. Izard, County of, Arkansas
241. Jackson, County of, Arkansas
242. Jacksonville, City of, Arkansas
243. Jefferson, County of, Arkansas
244. Johnson, County of, Arkansas
245. Jonesboro, City of, Arkansas
246. Lawrence, County of, Arkansas
247. Lincoln, County of, Arkansas
248. Little River, County of, Arkansas
249. Little Rock, City of, Arkansas
250. Logan, County of, Arkansas
251. Lonoke, County of, Arkansas
252. Madison, County of, Arkansas
253. Magnolia, City of, Arkansas
254. Malvern, City of, Arkansas
255. Marion, City of, Arkansas
256. Marion, County of, Arkansas
257. Maumelle, City of, Arkansas
258. Miller, County of, Arkansas
259. Mississippi, County of, Arkansas
260. Mountain Home, City of, Arkansas
261. North Little Rock, City of, Arkansas
262. Ouachita, County of, Arkansas
263. Paragould, City of, Arkansas
264. Perry, County of, Arkansas
265. Phillips, County of, Arkansas

266. Pike, County of, Arkansas
267. Pine Bluff, City of, Arkansas
268. Poinsett, County of, Arkansas
269. Polk, County of, Arkansas
270. Pope, County of, Arkansas
271. Pulaski, County of, Arkansas
272. Randolph, County of, Arkansas
273. Rogers, City of, Arkansas
274. Russellville, City of, Arkansas
275. Saline, County of, Arkansas
276. Scott, County of, Arkansas
277. Searcy, City of, Arkansas
278. Sebastian, County of, Arkansas
279. Sevier, County of, Arkansas
280. Sharp, County of, Arkansas
281. Sherwood, City of, Arkansas
282. Siloam Springs, City of, Arkansas
283. Springdale, City of, Arkansas
284. St. Francis, County of, Arkansas
285. Stone, County of, Arkansas
286. Texarkana, City of, Arkansas
287. Union, County of, Arkansas
288. Van Buren, City of, Arkansas
289. Van Buren, County of, Arkansas
290. Washington, County of, Arkansas
291. West Memphis, City of, Arkansas
292. White, County of, Arkansas
293. Yell, County of, Arkansas
294. Adelanto, City of, California
295. Agoura Hills, City of, California
296. Alameda, City of, California
297. Alameda, County of, California
298. Albany, City of, California
299. Alhambra, City of, California
300. Aliso Viejo, City of, California
301. Amador, County of, California
302. American Canyon, City of, California
303. Anaheim, City of, California
304. Anderson, City of, California
305. Antioch, City of, California
306. Apple Valley, Town of, California
307. Arcadia, City of, California
308. Arcata, City of, California
309. Arroyo Grande, City of, California
310. Artesia, City of, California
311. Arvin, City of, California
312. Atascadero, City of, California
313. Atwater, City of, California
314. Auburn, City of, California
315. Avenal, City of, California
316. Azusa, City of, California
317. Bakersfield, City of, California
318. Baldwin Park, City of, California
319. Banning, City of, California
320. Barstow, City of, California
321. Beaumont, City of, California
322. Bell, City of, California
323. Bell Gardens, City of, California
324. Bellflower, City of, California
325. Belmont, City of, California
326. Benicia, City of, California
327. Berkeley, City of, California
328. Beverly Hills, City of, California
329. Blythe, City of, California
330. Brawley, City of, California
331. Brea, City of, California
332. Brentwood, City of, California
333. Buena Park, City of, California
334. Burbank, City of, California
335. Burlingame, City of, California
336. Butte, County of, California
337. Calabasas, City of, California
338. Calaveras, County of, California
339. Calexico, City of, California
340. California City, City of, California
341. Camarillo, City of, California
342. Campbell, City of, California
343. Canyon Lake, City of, California
344. Capitola, City of, California
345. Carlsbad, City of, California
346. Carpinteria, City of, California
347. Carson, City of, California
348. Cathedral City, City of, California
349. Ceres, City of, California
350. Cerritos, City of, California
351. Chico, City of, California
352. Chino, City of, California
353. Chino Hills, City of, California
354. Chowchilla, City of, California
355. Chula Vista, City of, California
356. Citrus Heights, City of, California

357. Claremont, City of, California
358. Clayton, City of, California
359. Clearlake, City of, California
360. Clovis, City of, California
361. Coachella, City of, California
362. Coalinga, City of, California
363. Colton, City of, California
364. Colusa, County of, California
365. Commerce, City of, California
366. Compton, City of, California
367. Concord, City of, California
368. Contra Costa, County of, California
369. Corcoran, City of, California
370. Corona, City of, California
371. Coronado, City of, California
372. Costa Mesa, City of, California
373. Covina, City of, California
374. Cudahy, City of, California
375. Culver City, City of, California
376. Cupertino, City of, California
377. Cypress, City of, California
378. Daly City, City of, California
379. Dana Point, City of, California
380. Danville, Town of, California
381. Davis, City of, California
382. Del Norte, County of, California
383. Delano, City of, California
384. Desert Hot Springs, City of, California
385. Diamond Bar, City of, California
386. Dinuba, City of, California
387. Dixon, City of, California
388. Downey, City of, California
389. Duarte, City of, California
390. Dublin, City of, California
391. East Palo Alto, City of, California
392. Eastvale, City of, California
393. El Cajon, City of, California
394. El Centro, City of, California
395. El Cerrito, City of, California
396. El Dorado, County of, California
397. El Monte, City of, California
398. El Paso de Robles (Paso Robles), City of, California
399. El Segundo, City of, California
400. Elk Grove, City of, California
401. Emeryville, City of, California
402. Encinitas, City of, California
403. Escondido, City of, California
404. Eureka, City of, California
405. Exeter, City of, California
406. Fairfield, City of, California
407. Farmersville, City of, California
408. Fillmore, City of, California
409. Folsom, City of, California
410. Fontana, City of, California
411. Fortuna, City of, California
412. Foster City, City of, California
413. Fountain Valley, City of, California
414. Fremont, City of, California
415. Fresno, City of, California
416. Fresno, County of, California
417. Fullerton, City of, California
418. Galt, City of, California
419. Garden Grove, City of, California
420. Gardena, City of, California
421. Gilroy, City of, California
422. Glendale, City of, California
423. Glendora, City of, California
424. Glenn, County of, California
425. Goleta, City of, California
426. Grand Terrace, City of, California
427. Grass Valley, City of, California
428. Greenfield, City of, California
429. Grover Beach, City of, California
430. Half Moon Bay, City of, California
431. Hanford, City of, California
432. Hawaiian Gardens, City of, California
433. Hawthorne, City of, California
434. Hayward, City of, California
435. Healdsburg, City of, California
436. Hemet, City of, California
437. Hercules, City of, California
438. Hermosa Beach, City of, California
439. Hesperia, City of, California
440. Highland, City of, California
441. Hillsborough, Town of, California
442. Hollister, City of, California
443. Humboldt, County of, California
444. Huntington Beach, City of, California

445. Huntington Park, City of, California
446. Imperial Beach, City of, California
447. Imperial, City of, California
448. Imperial, County of, California
449. Indio, City of, California
450. Inglewood, City of, California
451. Inyo, County of, California
452. Irvine, City of, California
453. Jurupa Valley, City of, California
454. Kerman, City of, California
455. Kern, County of, California
456. King City, City of, California
457. Kings, County of, California
458. Kingsburg, City of, California
459. La Cañada Flintridge, City of, California
460. La Habra, City of, California
461. La Mesa, City of, California
462. La Mirada, City of, California
463. La Palma, City of, California
464. La Puente, City of, California
465. La Quinta, City of, California
466. La Verne, City of, California
467. Lafayette, City of, California
468. Laguna Beach, City of, California
469. Laguna Hills, City of, California
470. Laguna Niguel, City of, California
471. Laguna Woods, City of, California
472. Lake, County of, California
473. Lake Elsinore, City of, California
474. Lake Forest, City of, California
475. Lakewood, City of, California
476. Lancaster, City of, California
477. Larkspur, City of, California
478. Lassen, County of, California
479. Lathrop, City of, California
480. Lawndale, City of, California
481. Lemon Grove, City of, California
482. Lemoore, City of, California
483. Lincoln, City of, California
484. Lindsay, City of, California
485. Livermore, City of, California
486. Livingston, City of, California
487. Lodi, City of, California
488. Loma Linda, City of, California
489. Lomita, City of, California
490. Lompoc, City of, California
491. Long Beach, City of, California
492. Los Alamitos, City of, California
493. Los Altos, City of, California
494. Los Angeles, City of, California
495. Los Angeles, County of, California
496. Los Banos, City of, California
497. Los Gatos, Town of, California
498. Lynwood, City of, California
499. Madera, City of, California
500. Madera, County of, California
501. Malibu, City of, California
502. Manhattan Beach, City of, California
503. Manteca, City of, California
504. Marin, County of, California
505. Marina, City of, California
506. Mariposa, County of, California
507. Martinez, City of, California
508. Marysville, City of, California
509. Maywood, City of, California
510. McFarland, City of, California
511. Mendocino, County of, California
512. Mendota, City of, California
513. Menifee, City of, California
514. Menlo Park, City of, California
515. Merced, City of, California
516. Merced, County of, California
517. Mill Valley, City of, California
518. Millbrae, City of, California
519. Milpitas, City of, California
520. Mission Viejo, City of, California
521. Modesto, City of, California
522. Mono, County of, California
523. Monrovia, City of, California
524. Montclair, City of, California
525. Montebello, City of, California
526. Monterey, City of, California
527. Monterey, County of, California
528. Monterey Park, City of, California
529. Moorpark, City of, California
530. Moraga, Town of, California
531. Moreno Valley, City of, California
532. Morgan Hill, City of, California
533. Morro Bay, City of, California
534. Mountain View, City of, California
535. Murrieta, City of, California

536. Napa, City of, California
537. Napa, County of, California
538. National City, City of, California
539. Nevada, County of, California
540. Newark, City of, California
541. Newman, City of, California
542. Newport Beach, City of, California
543. Norco, City of, California
544. Norwalk, City of, California
545. Novato, City of, California
546. Oakdale, City of, California
547. Oakland, City of, California
548. Oakley, City of, California
549. Oceanside, City of, California
550. Ontario, City of, California
551. Orange, City of, California
552. Orange, County of, California
553. Orange Cove, City of, California
554. Orinda, City of, California
555. Oroville, City of, California
556. Oxnard, City of, California
557. Pacific Grove, City of, California
558. Pacifica, City of, California
559. Palm Desert, City of, California
560. Palm Springs, City of, California
561. Palmdale, City of, California
562. Palo Alto, City of, California
563. Palos Verdes Estates, City of, California
564. Paramount, City of, California
565. Parlier, City of, California
566. Pasadena, City of, California
567. Patterson, City of, California
568. Perris, City of, California
569. Petaluma, City of, California
570. Pico Rivera, City of, California
571. Piedmont, City of, California
572. Pinole, City of, California
573. Pittsburg, City of, California
574. Placentia, City of, California
575. Placer, County of, California
576. Placerville, City of, California
577. Pleasant Hill, City of, California
578. Pleasanton, City of, California
579. Plumas, County of, California
580. Pomona, City of, California
581. Port Hueneme, City of, California
582. Porterville, City of, California
583. Poway, City of, California
584. Rancho Cordova, City of, California
585. Rancho Cucamonga, City of, California
586. Rancho Mirage, City of, California
587. Rancho Palos Verdes, City of, California
588. Rancho Santa Margarita, City of, California
589. Red Bluff, City of, California
590. Redding, City of, California
591. Redlands, City of, California
592. Redondo Beach, City of, California
593. Redwood City, City of, California
594. Reedley, City of, California
595. Rialto, City of, California
596. Richmond, City of, California
597. Ridgecrest, City of, California
598. Ripon, City of, California
599. Riverbank, City of, California
600. Riverside, City of, California
601. Riverside, County of, California
602. Rocklin, City of, California
603. Rohnert Park, City of, California
604. Rosemead, City of, California
605. Roseville, City of, California
606. Sacramento, City of, California
607. Sacramento, County of, California
608. Salinas, City of, California
609. San Anselmo, Town of, California
610. San Benito, County of, California
611. San Bernardino, City of, California
612. San Bernardino, County of, California
613. San Bruno, City of, California
614. San Buenaventura (Ventura), City of, California
615. San Carlos, City of, California
616. San Clemente, City of, California
617. San Diego, City of, California
618. San Diego, County of, California
619. San Dimas, City of, California
620. San Fernando, City of, California

621. San Francisco, City of/ County of, California
622. San Gabriel, City of, California
623. San Jacinto, City of, California
624. San Joaquin, County of, California
625. San Jose, City of, California
626. San Juan Capistrano, City of, California
627. San Leandro, City of, California
628. San Luis Obispo, City of, California
629. San Luis Obispo, County of, California
630. San Marcos, City of, California
631. San Marino, City of, California
632. San Mateo, City of, California
633. San Mateo, County of, California
634. San Pablo, City of, California
635. San Rafael, City of, California
636. San Ramon, City of, California
637. Sanger, City of, California
638. Santa Ana, City of, California
639. Santa Barbara, City of, California
640. Santa Barbara, County of, California
641. Santa Clara, City of, California
642. Santa Clara, County of, California
643. Santa Clarita, City of, California
644. Santa Cruz, City of, California
645. Santa Cruz, County of, California
646. Santa Fe Springs, City of, California
647. Santa Maria, City of, California
648. Santa Monica, City of, California
649. Santa Paula, City of, California
650. Santa Rosa, City of, California
651. Santee, City of, California
652. Saratoga, City of, California
653. Scotts Valley, City of, California
654. Seal Beach, City of, California
655. Seaside, City of, California
656. Selma, City of, California
657. Shafter, City of, California
658. Shasta, County of, California
659. Shasta Lake, City of, California
660. Sierra Madre, City of, California
661. Signal Hill, City of, California
662. Simi Valley, City of, California
663. Siskiyou, County of, California
664. Solana Beach, City of, California
665. Solano, County of, California
666. Soledad, City of, California
667. Sonoma, City of, California
668. Sonoma, County of, California
669. South El Monte, City of, California
670. South Gate, City of, California
671. South Lake Tahoe, City of, California
672. South Pasadena, City of, California
673. South San Francisco, City of, California
674. Stanislaus, County of, California
675. Stanton, City of, California
676. Stockton, City of, California
677. Suisun City, City of, California
678. Sunnyvale, City of, California
679. Susanville, City of, California
680. Sutter, County of, California
681. Tehachapi, City of, California
682. Tehama, County of, California
683. Temecula, City of, California
684. Temple City, City of, California
685. Thousand Oaks, City of, California
686. Torrance, City of, California
687. Tracy, City of, California
688. Trinity, County of, California
689. Truckee, Town of, California
690. Tulare, City of, California
691. Tulare, County of, California
692. Tuolumne, County of, California
693. Turlock, City of, California
694. Tustin, City of, California
695. Twentynine Palms, City of, California
696. Ukiah, City of, California
697. Union City, City of, California
698. Upland, City of, California
699. Vacaville, City of, California
700. Vallejo, City of, California
701. Ventura, County of, California
702. Victorville, City of, California
703. Visalia, City of, California
704. Vista, City of, California
705. Walnut, City of, California
706. Walnut Creek, City of, California

707. Wasco, City of, California
708. Watsonville, City of, California
709. West Covina, City of, California
710. West Hollywood, City of, California
711. West Sacramento, City of, California
712. Westminster, City of, California
713. Whittier, City of, California
714. Wildomar, City of, California
715. Windsor, Town of, California
716. Woodland, City of, California
717. Yolo, County of, California
718. Yorba Linda, City of, California
719. Yuba City, City of, California
720. Yuba, County of, California
721. Yucaipa, City of, California
722. Yucca Valley, Town of, California
723. Adams, County of, Colorado
724. Alamosa, County of, Colorado
725. Arapahoe, County of, Colorado
726. Archuleta, County of, Colorado
727. Arvada, City of, Colorado
728. Aurora, City of, Colorado
729. Boulder, City of, Colorado
730. Boulder, County of, Colorado
731. Brighton, City of, Colorado
732. Broomfield, City of/ County of, Colorado
733. Cañon City, City of, Colorado
734. Castle Pines, City of, Colorado
735. Castle Rock, Town of, Colorado
736. Centennial, City of, Colorado
737. Chaffee, County of, Colorado
738. Colorado Springs, City of, Colorado
739. Commerce City, City of, Colorado
740. Delta, County of, Colorado
741. Denver, City of/ County of, Colorado
742. Douglas, County of, Colorado
743. Durango, City of, Colorado
744. Eagle, County of, Colorado
745. El Paso, County of, Colorado
746. Elbert, County of, Colorado
747. Englewood, City of, Colorado
748. Erie, Town of, Colorado
749. Evans, City of, Colorado
750. Federal Heights, City of, Colorado
751. Firestone, Town of, Colorado
752. Fort Collins, City of, Colorado
753. Fort Morgan, City of, Colorado
754. Fountain, City of, Colorado
755. Frederick, Town of, Colorado
756. Fremont, County of, Colorado
757. Fruita, City of, Colorado
758. Garfield, County of, Colorado
759. Golden, City of, Colorado
760. Grand, County of, Colorado
761. Grand Junction, City of, Colorado
762. Greeley, City of, Colorado
763. Greenwood, Village of/ City of, Colorado
764. Gunnison, County of, Colorado
765. Jefferson, County of, Colorado
766. Johnstown, Town of, Colorado
767. La Plata, County of, Colorado
768. Lafayette, City of, Colorado
769. Lakewood, City of, Colorado
770. Larimer, County of, Colorado
771. Las Animas, County of, Colorado
772. Littleton, City of, Colorado
773. Logan, County of, Colorado
774. Lone Tree, City of, Colorado
775. Longmont, City of, Colorado
776. Louisville, City of, Colorado
777. Loveland, City of, Colorado
778. Mesa, County of, Colorado
779. Moffat, County of, Colorado
780. Montezuma, County of, Colorado
781. Montrose, City of, Colorado
782. Montrose, County of, Colorado
783. Morgan, County of, Colorado
784. Northglenn, City of, Colorado
785. Otero, County of, Colorado
786. Park, County of, Colorado
787. Parker, Town of, Colorado
788. Pitkin, County of, Colorado
789. Prowers, County of, Colorado
790. Pueblo, City of, Colorado
791. Pueblo, County of, Colorado
792. Rio Grande, County of, Colorado
793. Routt, County of, Colorado
794. Steamboat Springs, City of, Colorado

795. Sterling, City of, Colorado
796. Summit, County of, Colorado
797. Superior, Town of, Colorado
798. Teller, County of, Colorado
799. Thornton, City of, Colorado
800. Weld, County of, Colorado
801. Wellington, Town of, Colorado
802. Westminster, City of, Colorado
803. Wheat Ridge, City of, Colorado
804. Windsor, Town of, Colorado
805. Yuma, County of, Colorado
806. Ansonia, Town of/ City of, Connecticut
807. Avon, Town of, Connecticut
808. Berlin, Town of, Connecticut
809. Bethel, Town of, Connecticut
810. Bloomfield, Town of, Connecticut
811. Branford, Town of, Connecticut
812. Bridgeport, Town of/ City of, Connecticut
813. Bristol, City of/ Town of, Connecticut
814. Brookfield, Town of, Connecticut
815. Canton, Town of, Connecticut
816. Cheshire, Town of, Connecticut
817. Clinton, Town of, Connecticut
818. Colchester, Town of, Connecticut
819. Coventry, Town of, Connecticut
820. Cromwell, Town of, Connecticut
821. Danbury, City of/ Town of, Connecticut
822. Darien, Town of, Connecticut
823. Derby, City of/ Town of, Connecticut
824. East Hampton, Town of, Connecticut
825. East Hartford, Town of, Connecticut
826. East Haven, Town of, Connecticut
827. East Lyme, Town of, Connecticut
828. East Windsor, Town of, Connecticut
829. Ellington, Town of, Connecticut
830. Enfield, Town of, Connecticut
831. Fairfield, Town of, Connecticut
832. Farmington, Town of, Connecticut
833. Glastonbury, Town of, Connecticut
834. Granby, Town of, Connecticut
835. Greenwich, Town of, Connecticut
836. Griswold, Town of, Connecticut
837. Groton, Town of, Connecticut
838. Guilford, Town of, Connecticut
839. Hamden, Town of, Connecticut
840. Hartford, City of/ Town of, Connecticut
841. Killingly, Town of, Connecticut
842. Ledyard, Town of, Connecticut
843. Madison, Town of, Connecticut
844. Manchester, Town of, Connecticut
845. Mansfield, Town of, Connecticut
846. Meriden, City of/ Town of, Connecticut
847. Middletown, City of/ Town of, Connecticut
848. Milford, City of, Connecticut
849. Milford, Town of, Connecticut
850. Monroe, Town of, Connecticut
851. Montville, Town of, Connecticut
852. Naugatuck, Borough of/ Town of, Connecticut
853. New Britain, Town of/ City of, Connecticut
854. New Canaan, Town of, Connecticut
855. New Fairfield, Town of, Connecticut
856. New Haven, Town of/ City of, Connecticut
857. New London, City of/ Town of, Connecticut
858. New Milford, Town of, Connecticut
859. Newington, Town of, Connecticut
860. Newtown, Town of, Connecticut
861. North Branford, Town of, Connecticut
862. North Haven, Town of, Connecticut
863. Norwalk, City of/ Town of, Connecticut
864. Norwich, City of/ Town of, Connecticut
865. Old Saybrook, Town of, Connecticut
866. Orange, Town of, Connecticut
867. Oxford, Town of, Connecticut
868. Plainfield, Town of, Connecticut
869. Plainville, Town of, Connecticut
870. Plymouth, Town of, Connecticut
871. Ridgefield, Town of, Connecticut

872. Rocky Hill, Town of, Connecticut
873. Seymour, Town of, Connecticut
874. Shelton, City of/ Town of, Connecticut
875. Simsbury, Town of, Connecticut
876. Somers, Town of, Connecticut
877. South Windsor, Town of, Connecticut
878. Southbury, Town of, Connecticut
879. Southington, Town of, Connecticut
880. Stafford, Town of, Connecticut
881. Stamford, City of/ Town of, Connecticut
882. Stonington, Town of, Connecticut
883. Stratford, Town of, Connecticut
884. Suffield, Town of, Connecticut
885. Tolland, Town of, Connecticut
886. Torrington, City of/ Town of, Connecticut
887. Trumbull, Town of, Connecticut
888. Vernon, Town of, Connecticut
889. Wallingford, Town of, Connecticut
890. Waterbury, City of/ Town of, Connecticut
891. Waterford, Town of, Connecticut
892. Watertown, Town of, Connecticut
893. West Hartford, Town of, Connecticut
894. West Haven, City of/ Town of, Connecticut
895. Weston, Town of, Connecticut
896. Westport, Town of, Connecticut
897. Wethersfield, Town of, Connecticut
898. Wilton, Town of, Connecticut
899. Winchester, Town of, Connecticut
900. Windham, Town of, Connecticut
901. Windsor Locks, Town of, Connecticut
902. Windsor, Town of, Connecticut
903. Wolcott, Town of, Connecticut
904. Dover, City of, Delaware
905. Kent, County of, Delaware
906. Middletown, Town of, Delaware
907. Milford, City of, Delaware
908. New Castle, County of, Delaware
909. Newark, City of, Delaware
910. Smyrna, Town of, Delaware
911. Sussex, County of, Delaware
912. Wilmington, City of, Delaware
913. Acworth, City of, Georgia
914. Albany, City of, Georgia
915. Alpharetta, City of, Georgia
916. Americus, City of, Georgia
917. Appling, County of, Georgia
918. Athens-Clarke County, Unified Government of, Georgia
919. Atlanta, City of, Georgia
920. Augusta-Richmond County, Consolidated Government of, Georgia
921. Bacon, County of, Georgia
922. Bainbridge, City of, Georgia
923. Baldwin, County of, Georgia
924. Banks, County of, Georgia
925. Barrow, County of, Georgia
926. Bartow, County of, Georgia
927. Ben Hill, County of, Georgia
928. Berrien, County of, Georgia
929. Bleckley, County of, Georgia
930. Brantley, County of, Georgia
931. Braselton, Town of, Georgia
932. Brookhaven, City of, Georgia
933. Brooks, County of, Georgia
934. Brunswick, City of, Georgia
935. Bryan, County of, Georgia
936. Buford, City of, Georgia
937. Bulloch, County of, Georgia
938. Burke, County of, Georgia
939. Butts, County of, Georgia
940. Calhoun, City of, Georgia
941. Camden, County of, Georgia
942. Candler, County of, Georgia
943. Canton, City of, Georgia
944. Carroll, County of, Georgia
945. Carrollton, City of, Georgia
946. Cartersville, City of, Georgia
947. Catoosa, County of, Georgia
948. Chamblee, City of, Georgia
949. Charlton, County of, Georgia
950. Chatham, County of, Georgia
951. Chattooga, County of, Georgia
952. Cherokee, County of, Georgia
953. Clarkston, City of, Georgia

954. Clayton, County of, Georgia
955. Cobb, County of, Georgia
956. Coffee, County of, Georgia
957. College Park, City of, Georgia
958. Colquitt, County of, Georgia
959. Columbia, County of, Georgia
960. Columbus, City of, Georgia
961. Columbus, City of/ Muscogee, County of, Georgia
962. Conyers, City of, Georgia
963. Cook, County of, Georgia
964. Cordele, City of, Georgia
965. Covington, City of, Georgia
966. Coweta, County of, Georgia
967. Crawford, County of, Georgia
968. Crisp, County of, Georgia
969. Cusseta-Chattahoochee County, Unified Government of, Georgia
970. Dade, County of, Georgia
971. Dallas, City of, Georgia
972. Dalton, City of, Georgia
973. Dawson, County of, Georgia
974. Decatur, City of, Georgia
975. Decatur, County of, Georgia
976. DeKalb, County of, Georgia
977. Dodge, County of, Georgia
978. Dooly, County of, Georgia
979. Doraville, City of, Georgia
980. Dougherty, County of, Georgia
981. Douglas, City of, Georgia
982. Douglas, County of, Georgia
983. Douglasville, City of, Georgia
984. Dublin, City of, Georgia
985. Duluth, City of, Georgia
986. Dunwoody, City of, Georgia
987. Early, County of, Georgia
988. East Point, City of, Georgia
989. Effingham, County of, Georgia
990. Elbert, County of, Georgia
991. Emanuel, County of, Georgia
992. Evans, County of, Georgia
993. Fairburn, City of, Georgia
994. Fannin, County of, Georgia
995. Fayette, County of, Georgia
996. Fayetteville, City of, Georgia
997. Floyd, County of, Georgia
998. Forest Park, City of, Georgia
999. Forsyth, County of, Georgia
1000. Franklin, County of, Georgia
1001. Fulton, County of, Georgia
1002. Gainesville, City of, Georgia
1003. Gilmer, County of, Georgia
1004. Glynn, County of, Georgia
1005. Gordon, County of, Georgia
1006. Grady, County of, Georgia
1007. Greene, County of, Georgia
1008. Griffin, City of, Georgia
1009. Grovetown, City of, Georgia
1010. Gwinnett, County of, Georgia
1011. Habersham, County of, Georgia
1012. Hall, County of, Georgia
1013. Haralson, County of, Georgia
1014. Harris, County of, Georgia
1015. Hart, County of, Georgia
1016. Heard, County of, Georgia
1017. Henry, County of, Georgia
1018. Hinesville, City of, Georgia
1019. Holly Springs, City of, Georgia
1020. Houston, County of, Georgia
1021. Jackson, County of, Georgia
1022. Jasper, County of, Georgia
1023. Jeff Davis, County of, Georgia
1024. Jefferson, City of, Georgia
1025. Jefferson, County of, Georgia
1026. Johns Creek, City of, Georgia
1027. Jones, County of, Georgia
1028. Kennesaw, City of, Georgia
1029. Kingsland, City of, Georgia
1030. LaGrange, City of, Georgia
1031. Lamar, County of, Georgia
1032. Lanier, County of, Georgia
1033. Laurens, County of, Georgia
1034. Lawrenceville, City of, Georgia
1035. Lee, County of, Georgia
1036. Liberty, County of, Georgia
1037. Lilburn, City of, Georgia
1038. Loganville, City of, Georgia
1039. Long, County of, Georgia
1040. Lowndes, County of, Georgia
1041. Lumpkin, County of, Georgia
1042. Macon, County of, Georgia
1043. Macon-Bibb, County of, Georgia

1044. Madison, County of, Georgia
1045. Marietta, City of, Georgia
1046. McDonough, City of, Georgia
1047. McDuffie, County of, Georgia
1048. McIntosh, County of, Georgia
1049. Meriwether, County of, Georgia
1050. Milledgeville, City of, Georgia
1051. Milton, City of, Georgia
1052. Mitchell, County of, Georgia
1053. Monroe, City of, Georgia
1054. Monroe, County of, Georgia
1055. Morgan, County of, Georgia
1056. Moultrie, City of, Georgia
1057. Murray, County of, Georgia
1058. Newnan, City of, Georgia
1059. Newton, County of, Georgia
1060. Norcross, City of, Georgia
1061. Oconee, County of, Georgia
1062. Oglethorpe, County of, Georgia
1063. Paulding, County of, Georgia
1064. Peach, County of, Georgia
1065. Peachtree City, City of, Georgia
1066. Peachtree Corners, City of, Georgia
1067. Perry, City of, Georgia
1068. Pickens, County of, Georgia
1069. Pierce, County of, Georgia
1070. Pike, County of, Georgia
1071. Polk, County of, Georgia
1072. Pooler, City of, Georgia
1073. Powder Springs, City of, Georgia
1074. Pulaski, County of, Georgia
1075. Putnam, County of, Georgia
1076. Rabun, County of, Georgia
1077. Richmond Hill, City of, Georgia
1078. Rincon, City of, Georgia
1079. Riverdale, City of, Georgia
1080. Rockdale, County of, Georgia
1081. Rome, City of, Georgia
1082. Roswell, City of, Georgia
1083. Sandy Springs, City of, Georgia
1084. Savannah, City of, Georgia
1085. Screven, County of, Georgia
1086. Smyrna, City of, Georgia
1087. Snellville, City of, Georgia
1088. South Fulton, City of, Georgia
1089. Spalding, County of, Georgia
1090. St. Marys, City of, Georgia
1091. Statesboro, City of, Georgia
1092. Stephens, County of, Georgia
1093. Stockbridge, City of, Georgia
1094. Stonecrest, City of, Georgia
1095. Sugar Hill, City of, Georgia
1096. Sumter, County of, Georgia
1097. Suwanee, City of, Georgia
1098. Tattnall, County of, Georgia
1099. Telfair, County of, Georgia
1100. Thomas, County of, Georgia
1101. Thomasville, City of, Georgia
1102. Tift, County of, Georgia
1103. Tifton, City of, Georgia
1104. Toombs, County of, Georgia
1105. Towns, County of, Georgia
1106. Troup, County of, Georgia
1107. Tucker, City of, Georgia
1108. Union City, City of, Georgia
1109. Union, County of, Georgia
1110. Upson, County of, Georgia
1111. Valdosta, City of, Georgia
1112. Vidalia, City of, Georgia
1113. Villa Rica, City of, Georgia
1114. Walker, County of, Georgia
1115. Walton, County of, Georgia
1116. Ware, County of, Georgia
1117. Warner Robins, City of, Georgia
1118. Washington, County of, Georgia
1119. Waycross, City of, Georgia
1120. Wayne, County of, Georgia
1121. White, County of, Georgia
1122. Whitfield, County of, Georgia
1123. Winder, City of, Georgia
1124. Woodstock, City of, Georgia
1125. Worth, County of, Georgia
1126. Hawaii, County of, Hawaii
1127. Honolulu, County of/ City of, Hawaii
1128. Kauai, County of, Hawaii
1129. Maui, County of, Hawaii
1130. Ada, County of, Idaho
1131. Ammon, City of, Idaho
1132. Bannock, County of, Idaho
1133. Bingham, County of, Idaho
1134. Blackfoot, City of, Idaho

1135. Blaine, County of, Idaho
1136. Boise City, City of, Idaho
1137. Bonner, County of, Idaho
1138. Bonneville, County of, Idaho
1139. Boundary, County of, Idaho
1140. Burley, City of, Idaho
1141. Caldwell, City of, Idaho
1142. Canyon, County of, Idaho
1143. Cassia, County of, Idaho
1144. Chubbuck, City of, Idaho
1145. Coeur d'Alene, City of, Idaho
1146. Eagle, City of, Idaho
1147. Elmore, County of, Idaho
1148. Franklin, County of, Idaho
1149. Fremont, County of, Idaho
1150. Garden City, City of, Idaho
1151. Gem, County of, Idaho
1152. Gooding, County of, Idaho
1153. Hayden, City of, Idaho
1154. Idaho, County of, Idaho
1155. Idaho Falls, City of, Idaho
1156. Jefferson, County of, Idaho
1157. Jerome, City of, Idaho
1158. Jerome, County of, Idaho
1159. Kootenai, County of, Idaho
1160. Kuna, City of, Idaho
1161. Latah, County of, Idaho
1162. Lewiston, City of, Idaho
1163. Madison, County of, Idaho
1164. Meridian, City of, Idaho
1165. Minidoka, County of, Idaho
1166. Moscow, City of, Idaho
1167. Mountain Home, City of, Idaho
1168. Nampa, City of, Idaho
1169. Nez Perce, County of, Idaho
1170. Owyhee, County of, Idaho
1171. Payette, County of, Idaho
1172. Pocatello, City of, Idaho
1173. Post Falls, City of, Idaho
1174. Rexburg, City of, Idaho
1175. Shoshone, County of, Idaho
1176. Star, City of, Idaho
1177. Teton, County of, Idaho
1178. Twin Falls, City of, Idaho
1179. Twin Falls, County of, Idaho
1180. Valley, County of, Idaho
1181. Washington, County of, Idaho
1182. Adams, County of, Illinois
1183. Addison Township, Illinois
1184. Addison, Village of, Illinois
1185. Algonquin Township, Illinois
1186. Algonquin, Village of, Illinois
1187. Alsip, Village of, Illinois
1188. Alton, City of, Illinois
1189. Alton Township, Illinois
1190. Antioch Township, Illinois
1191. Antioch, Village of, Illinois
1192. Arlington Heights, Village of, Illinois
1193. Aurora, City of, Illinois
1194. Aurora Township, Illinois
1195. Aux Sable Township, Illinois
1196. Avon Township, Illinois
1197. Barrington Township, Illinois
1198. Barrington, Village of, Illinois
1199. Bartlett, Village of, Illinois
1200. Batavia, City of, Illinois
1201. Batavia Township, Illinois
1202. Beach Park, Village of, Illinois
1203. Belleville, City of, Illinois
1204. Bellwood, Village of, Illinois
1205. Belvidere, City of, Illinois
1206. Belvidere Township, Illinois
1207. Bensenville, Village of, Illinois
1208. Benton Township, Illinois
1209. Berwyn, City of, Illinois
1210. Berwyn Township, Illinois
1211. Blackberry Township, Illinois
1212. Bloom Township, Illinois
1213. Bloomingdale Township, Illinois
1214. Bloomingdale, Village of, Illinois
1215. Bloomington, City of, Illinois
1216. Bloomington City Township, Illinois
1217. Blue Island, City of, Illinois
1218. Bolingbrook, Village of, Illinois
1219. Bond, County of, Illinois
1220. Boone, County of, Illinois
1221. Bourbonnais Township, Illinois
1222. Bourbonnais, Village of, Illinois
1223. Bradley, Village of, Illinois
1224. Bremen Township, Illinois
1225. Bridgeview, Village of, Illinois

1226. Bristol Township, Illinois
1227. Brookfield, Village of, Illinois
1228. Bruce Township, Illinois
1229. Buffalo Grove, Village of, Illinois
1230. Burbank, City of, Illinois
1231. Bureau, County of, Illinois
1232. Burr Ridge, Village of, Illinois
1233. Cahokia, Village of, Illinois
1234. Calumet City, City of, Illinois
1235. Calumet Township, Illinois
1236. Campton Hills, Village of, Illinois
1237. Campton Township, Illinois
1238. Canton, City of, Illinois
1239. Canton Township, Illinois
1240. Capital Township, Illinois
1241. Carbondale, City of, Illinois
1242. Carbondale Township, Illinois
1243. Carol Stream, Village of, Illinois
1244. Carpentersville, Village of, Illinois
1245. Carroll, County of, Illinois
1246. Cary, Village of, Illinois
1247. Caseyville Township, Illinois
1248. Cass, County of, Illinois
1249. Centralia, City of, Illinois
1250. Centralia Township, Illinois
1251. Centreville Township, Illinois
1252. Champaign, City of, Illinois
1253. Champaign City Township, Illinois
1254. Champaign, County of, Illinois
1255. Champaign Township, Illinois
1256. Channahon Township, Illinois
1257. Channahon, Village of, Illinois
1258. Charleston, City of, Illinois
1259. Charleston Township, Illinois
1260. Chatham, Village of, Illinois
1261. Cherry Valley Township, Illinois
1262. Chicago, City of, Illinois
1263. Chicago Heights, City of, Illinois
1264. Chicago Ridge, Village of, Illinois
1265. Christian, County of, Illinois
1266. Cicero, Town of/ Township of, Illinois
1267. Clark, County of, Illinois
1268. Clay, County of, Illinois
1269. Clinton, County of, Illinois
1270. Coles, County of, Illinois
1271. Collinsville, City of, Illinois
1272. Collinsville Township, Illinois
1273. Coloma Township, Illinois
1274. Columbia, City of, Illinois
1275. Cook, County of, Illinois
1276. Cortland Township, Illinois
1277. Country Club Hills, City of, Illinois
1278. Crawford, County of, Illinois
1279. Crest Hill, City of, Illinois
1280. Crestwood, Village of, Illinois
1281. Crete Township, Illinois
1282. Crystal Lake, City of, Illinois
1283. Cuba Township, Illinois
1284. Cumberland, County of, Illinois
1285. Cunningham Township, Illinois
1286. Danville, City of, Illinois
1287. Danville Township, Illinois
1288. Darien, City of, Illinois
1289. De Witt, County of, Illinois
1290. Decatur, City of, Illinois
1291. Decatur Township, Illinois
1292. Deerfield, Village of, Illinois
1293. DeKalb, City of, Illinois
1294. DeKalb, County of, Illinois
1295. DeKalb Township, Illinois
1296. Des Plaines, City of, Illinois
1297. Dixon, City of, Illinois
1298. Dixon Township, Illinois
1299. Dolton, Village of, Illinois
1300. Dorr Township, Illinois
1301. Douglas, County of, Illinois
1302. Douglas Township, Illinois
1303. Downers Grove Township, Illinois
1304. Downers Grove, Village of, Illinois
1305. Du Page Township, Illinois
1306. Dundee Township, Illinois
1307. DuPage, County of, Illinois
1308. East Moline, City of, Illinois
1309. East Peoria, City of, Illinois
1310. East St. Louis, City of, Illinois
1311. East St. Louis Township, Illinois
1312. Edgar, County of, Illinois
1313. Edwardsville, City of, Illinois
1314. Edwardsville Township, Illinois
1315. Effingham, City of, Illinois
1316. Effingham, County of, Illinois

1317. Ela Township, Illinois
1318. Elgin, City of, Illinois
1319. Elgin Township, Illinois
1320. Elk Grove Township, Illinois
1321. Elk Grove Village, Village of, Illinois
1322. Elmhurst, City of, Illinois
1323. Elmwood Park, Village of, Illinois
1324. Evanston, City of, Illinois
1325. Evergreen Park, Village of, Illinois
1326. Fairview Heights, City of, Illinois
1327. Fayette, County of, Illinois
1328. Flagg Township, Illinois
1329. Fondulac Township, Illinois
1330. Ford, County of, Illinois
1331. Forest Park, Village of, Illinois
1332. Fox Lake, Village of, Illinois
1333. Frankfort Township, Illinois
1334. Frankfort, Village of, Illinois
1335. Franklin, County of, Illinois
1336. Franklin Park, Village of, Illinois
1337. Freeport, City of, Illinois
1338. Freeport Township, Illinois
1339. Fremont Township, Illinois
1340. Fulton, County of, Illinois
1341. Galesburg, City of, Illinois
1342. Galesburg City Township, Illinois
1343. Geneva, City of, Illinois
1344. Geneva Township, Illinois
1345. Glen Carbon, Village of, Illinois
1346. Glen Ellyn, Village of, Illinois
1347. Glendale Heights, Village of, Illinois
1348. Glenview, Village of, Illinois
1349. Godfrey Township, Illinois
1350. Godfrey, Village of, Illinois
1351. Grafton Township, Illinois
1352. Granite City, City of, Illinois
1353. Granite City Township, Illinois
1354. Grant Township, Illinois
1355. Grayslake, Village of, Illinois
1356. Greene, County of, Illinois
1357. Greenwood Township, Illinois
1358. Groveland Township, Illinois
1359. Grundy, County of, Illinois
1360. Gurnee, Village of, Illinois
1361. Hampton Township, Illinois
1362. Hancock, County of, Illinois
1363. Hanover Park, Village of, Illinois
1364. Hanover Township, Illinois
1365. Harlem Township, Illinois
1366. Harrisburg Township, Illinois
1367. Harvey, City of, Illinois
1368. Hazel Crest, Village of, Illinois
1369. Henry, County of, Illinois
1370. Herrin, City of, Illinois
1371. Hickory Hills, City of, Illinois
1372. Hickory Point Township, Illinois
1373. Highland Park, City of, Illinois
1374. Hinsdale, Village of, Illinois
1375. Hoffman Estates, Village of, Illinois
1376. Homer Glen, Village of, Illinois
1377. Homer Township, Illinois
1378. Homewood, Village of, Illinois
1379. Huntley, Village of, Illinois
1380. Iroquois, County of, Illinois
1381. Jackson, County of, Illinois
1382. Jacksonville, City of, Illinois
1383. Jarvis Township, Illinois
1384. Jefferson, County of, Illinois
1385. Jersey, County of, Illinois
1386. Jo Daviess, County of, Illinois
1387. Johnson, County of, Illinois
1388. Joliet, City of, Illinois
1389. Joliet Township, Illinois
1390. Justice, Village of, Illinois
1391. Kane, County of, Illinois
1392. Kankakee, City of, Illinois
1393. Kankakee, County of, Illinois
1394. Kankakee Township, Illinois
1395. Kendall, County of, Illinois
1396. Kewanee, City of, Illinois
1397. Knox, County of, Illinois
1398. La Grange Park, Village of, Illinois
1399. La Grange, Village of, Illinois
1400. Lake, County of, Illinois
1401. Lake Forest, City of, Illinois
1402. Lake in the Hills, Village of, Illinois
1403. Lake Villa Township, Illinois
1404. Lake Zurich, Village of, Illinois
1405. Lansing, Village of, Illinois
1406. LaSalle, County of, Illinois
1407. LaSalle Township, Illinois

1408. Lawrence, County of, Illinois
1409. Lee, County of, Illinois
1410. Lemont Township, Illinois
1411. Lemont, Village of, Illinois
1412. Leyden Township, Illinois
1413. Libertyville Township, Illinois
1414. Libertyville, Village of, Illinois
1415. Limestone Township, Illinois
1416. Lincoln, City of, Illinois
1417. Lincolnwood, Village of, Illinois
1418. Lindenhurst, Village of, Illinois
1419. Lisle Township, Illinois
1420. Lisle, Village of, Illinois
1421. Little Rock Township, Illinois
1422. Livingston, County of, Illinois
1423. Lockport, City of, Illinois
1424. Lockport Township, Illinois
1425. Logan, County of, Illinois
1426. Lombard, Village of, Illinois
1427. Long Creek Township, Illinois
1428. Loves Park, City of, Illinois
1429. Lyons Township, Illinois
1430. Lyons, Village of, Illinois
1431. Machesney Park, Village of, Illinois
1432. Macomb, City of, Illinois
1433. Macomb City Township, Illinois
1434. Macon, County of, Illinois
1435. Macoupin, County of, Illinois
1436. Madison, County of, Illinois
1437. Mahomet Township, Illinois
1438. Maine Township, Illinois
1439. Manhattan Township, Illinois
1440. Manteno Township, Illinois
1441. Marion, City of, Illinois
1442. Marion, County of, Illinois
1443. Markham, City of, Illinois
1444. Marshall, County of, Illinois
1445. Mason, County of, Illinois
1446. Massac, County of, Illinois
1447. Matteson, Village of, Illinois
1448. Mattoon, City of, Illinois
1449. Mattoon, Township of, Illinois
1450. Maywood, Village of, Illinois
1451. McDonough, County of, Illinois
1452. McHenry, City of, Illinois
1453. McHenry, County of, Illinois
1454. McHenry, Township of, Illinois
1455. McLean, County of, Illinois
1456. Medina, Township of, Illinois
1457. Melrose Park, Village of, Illinois
1458. Menard, County of, Illinois
1459. Mercer, County of, Illinois
1460. Midlothian, Village of, Illinois
1461. Milton Township, Illinois
1462. Minooka, Village of, Illinois
1463. Mokena, Village of, Illinois
1464. Moline, City of, Illinois
1465. Moline, Township of, Illinois
1466. Monee, Township of, Illinois
1467. Monroe, County of, Illinois
1468. Montgomery, County of, Illinois
1469. Montgomery, Village of, Illinois
1470. Moraine, Township of, Illinois
1471. Morgan, County of, Illinois
1472. Morris, City of, Illinois
1473. Morton Grove, Village of, Illinois
1474. Morton, Township of, Illinois
1475. Morton, Village of, Illinois
1476. Moultrie, County of, Illinois
1477. Mount Prospect, Village of, Illinois
1478. Mount Vernon, City of, Illinois
1479. Mount Vernon, Township of, Illinois
1480. Mundelein, Village of, Illinois
1481. Nameoki, Township of, Illinois
1482. Naperville, City of, Illinois
1483. Naperville, Township of, Illinois
1484. New Lenox, Township of, Illinois
1485. New Lenox, Village of, Illinois
1486. New Trier, Township of, Illinois
1487. Newell, Township of, Illinois
1488. Niles, Township of, Illinois
1489. Niles, Village of, Illinois
1490. Normal, Town of, Illinois
1491. Normal, Township of, Illinois
1492. Norridge, Village of, Illinois
1493. North Aurora, Village of, Illinois
1494. North Chicago, City of, Illinois
1495. Northbrook, Village of, Illinois
1496. Northfield, Township of, Illinois
1497. Northlake, City of, Illinois
1498. Norwood Park, Township of, Illinois
1499. Nunda, Township of, Illinois

1500. Oak Forest, City of, Illinois
1501. Oak Lawn, Village of, Illinois
1502. Oak Park, Township of, Illinois
1503. Oak Park, Village of, Illinois
1504. O'Fallon, City of, Illinois
1505. O'Fallon, Township of, Illinois
1506. Ogle, County of, Illinois
1507. Orland Park, Village of, Illinois
1508. Orland, Township of, Illinois
1509. Oswego, Township of, Illinois
1510. Oswego, Village of, Illinois
1511. Ottawa, City of, Illinois
1512. Ottawa, Township of, Illinois
1513. Palatine, Township of, Illinois
1514. Palatine, Village of, Illinois
1515. Palos Heights, City of, Illinois
1516. Palos Hills, City of, Illinois
1517. Palos, Township of, Illinois
1518. Park Forest, Village of, Illinois
1519. Park Ridge, City of, Illinois
1520. Pekin, City of, Illinois
1521. Pekin, Township of, Illinois
1522. Peoria, City of, Illinois
1523. Peoria City Township, Illinois
1524. Peoria, County of, Illinois
1525. Perry, County of, Illinois
1526. Peru, Township of, Illinois
1527. Piatt, County of, Illinois
1528. Pike, County of, Illinois
1529. Plainfield, Township of, Illinois
1530. Plainfield, Village of, Illinois
1531. Plano, City of, Illinois
1532. Pontiac, City of, Illinois
1533. Pontiac, Township of, Illinois
1534. Prospect Heights, City of, Illinois
1535. Proviso, Township of, Illinois
1536. Quincy, City of, Illinois
1537. Quincy, Township of, Illinois
1538. Randolph, County of, Illinois
1539. Rantoul, Township of,Illinois
1540. Rantoul, Village of, Illinois
1541. Rich, Township of, Illinois
1542. Richland, County of, Illinois
1543. Richton Park, Village of, Illinois
1544. River Forest, Township of, Illinois
1545. River Forest, Village of, Illinois
1546. Riverdale, Village of, Illinois
1547. Riverside, Township of, Illinois
1548. Rock Island, City of, Illinois
1549. Rock Island, County of, Illinois
1550. Rock Island, Township of, Illinois
1551. Rockford, City of, Illinois
1552. Rockford, Township of, Illinois
1553. Rockton, Township of, Illinois
1554. Rolling Meadows, City of, Illinois
1555. Romeoville, Village of, Illinois
1556. Roscoe, Township of, Illinois
1557. Roscoe, Village of, Illinois
1558. Roselle, Village of, Illinois
1559. Round Lake Beach, Village of, Illinois
1560. Round Lake, Village of, Illinois
1561. Rutland, Township of, Illinois
1562. Saline, County of, Illinois
1563. Sangamon, County of, Illinois
1564. Sauk Village, Village of, Illinois
1565. Schaumburg, Township of, Illinois
1566. Schaumburg, Village of, Illinois
1567. Schiller Park, Village of, Illinois
1568. Shelby, County of, Illinois
1569. Shields, Township of, Illinois
1570. Shiloh Valley, Township of, Illinois
1571. Shiloh, Village of, Illinois
1572. Shorewood, Village of, Illinois
1573. Skokie, Village of, Illinois
1574. South Elgin, Village of, Illinois
1575. South Holland, Village of, Illinois
1576. South Moline, Township of, Illinois
1577. South Rock Island, Township of, Illinois
1578. Springfield, City of, Illinois
1579. St. Charles, City of, Illinois
1580. St. Charles, Township of, Illinois
1581. St. Clair, County of, Illinois
1582. St. Clair, Township of, Illinois
1583. Stephenson, County of, Illinois
1584. Sterling, City of, Illinois
1585. Sterling, Township of, Illinois
1586. Stickney, Township of, Illinois
1587. Streamwood, Village of, Illinois
1588. Streator, City of, Illinois
1589. Sugar Grove, Township of, Illinois

1590. Summit, Village of, Illinois
1591. Swansea, Village of, Illinois
1592. Sycamore, City of, Illinois
1593. Sycamore, Township of, Illinois
1594. Taylorville, City of, Illinois
1595. Taylorville, Township of, Illinois
1596. Tazewell, County of, Illinois
1597. Thornton, Township of, Illinois
1598. Tinley Park, Village of, Illinois
1599. Troy, City of, Illinois
1600. Troy, Township of, Illinois
1601. Union, County of, Illinois
1602. Urbana, City of, Illinois
1603. Vermilion, County of, Illinois
1604. Vernon Hills, Village of, Illinois
1605. Vernon, Township of, Illinois
1606. Villa Park, Village of, Illinois
1607. Wabash, County of, Illinois
1608. Warren, County of, Illinois
1609. Warren, Township of, Illinois
1610. Warrenville, City of, Illinois
1611. Washington, City of, Illinois
1612. Washington, County of, Illinois
1613. Washington, Township of, Illinois
1614. Waterloo, City of, Illinois
1615. Wauconda, Township of, Illinois
1616. Wauconda, Village of, Illinois
1617. Waukegan, City of, Illinois
1618. Waukegan, Township of, Illinois
1619. Wayne, County of, Illinois
1620. Wayne, Township of, Illinois
1621. West Chicago, City of, Illinois
1622. West Deerfield, Township of, Illinois
1623. Westchester, Village of, Illinois
1624. Western Springs, Village of, Illinois
1625. Westmont, Village of, Illinois
1626. Wheatland, Township of, Illinois
1627. Wheaton, City of, Illinois
1628. Wheeling, Township of, Illinois
1629. Wheeling, Village of, Illinois
1630. White, County of, Illinois
1631. Whiteside, County of, Illinois
1632. Will, County of, Illinois
1633. Williamson, County of, Illinois
1634. Wilmette, Village of, Illinois
1635. Winfield, Township of, Illinois
1636. Winnebago, County of, Illinois
1637. Winnetka, Village of, Illinois
1638. Wood Dale, City of, Illinois
1639. Wood River, City of, Illinois
1640. Wood River, Township of, Illinois
1641. Woodford, County of, Illinois
1642. Woodridge, Village of, Illinois
1643. Woodside, Township of, Illinois
1644. Woodstock, City of, Illinois
1645. Worth, Township of, Illinois
1646. Worth, Village of, Illinois
1647. York, Township of, Illinois
1648. Yorkville, City of, Illinois
1649. Zion, City of, Illinois
1650. Zion, Township of, Illinois
1651. Aboite, Township of, Indiana
1652. Adams, County of, Indiana
1653. Adams, Township of, Indiana
1654. Addison, Township of, Indiana
1655. Allen, County of, Indiana
1656. Anderson, City of, Indiana
1657. Anderson, Township of, Indiana
1658. Auburn, City of, Indiana
1659. Avon, Town of, Indiana
1660. Bainbridge, Township of, Indiana
1661. Bartholomew, County of, Indiana
1662. Baugo, Township of, Indiana
1663. Bedford, City of, Indiana
1664. Beech Grove, City of, Indiana
1665. Blackford, County of, Indiana
1666. Bloomington, City of, Indiana
1667. Bloomington, Township of, Indiana
1668. Bluffton, City of, Indiana
1669. Boon, Township of, Indiana
1670. Boone, County of, Indiana
1671. Brown, County of, Indiana
1672. Brown, Township of, Indiana
1673. Brownsburg, Town of, Indiana
1674. Calumet, Township of, Indiana
1675. Carmel, City of, Indiana
1676. Carroll, County of, Indiana
1677. Cass, County of, Indiana
1678. Cedar Creek, Township of, Indiana
1679. Cedar Lake, Town of, Indiana
1680. Center, Township of, Indiana
1681. Centre, Township of, Indiana

1682. Charlestown, Township of, Indiana
1683. Chesterton, Town of, Indiana
1684. Clark, County of, Indiana
1685. Clarksville, Town of, Indiana
1686. Clay, County of, Indiana
1687. Clay, Township of, Indiana
1688. Cleveland, Township of, Indiana
1689. Clinton, County of, Indiana
1690. Columbia, Township of, Indiana
1691. Columbus, City of, Indiana
1692. Columbus, Township of, Indiana
1693. Concord, Township of, Indiana
1694. Connersville, City of, Indiana
1695. Connersville, Township of, Indiana
1696. Coolspring, Township of, Indiana
1697. Crawford, County of, Indiana
1698. Crawfordsville, City of, Indiana
1699. Crown Point, City of, Indiana
1700. Danville, Town of, Indiana
1701. Daviess, County of, Indiana
1702. Dearborn, County of, Indiana
1703. Decatur, County of, Indiana
1704. Decatur, Township of, Indiana
1705. DeKalb, County of, Indiana
1706. Delaware, County of, Indiana
1707. Delaware, Township of, Indiana
1708. Dubois, County of, Indiana
1709. Dyer, Town of, Indiana
1710. East Chicago, City of, Indiana
1711. Eel, Township of, Indiana
1712. Elkhart, City of, Indiana
1713. Elkhart, County of, Indiana
1714. Elkhart, Township of, Indiana
1715. Evansville, City of, Indiana
1716. Fairfield, Township of, Indiana
1717. Fall Creek, Township of, Indiana
1718. Fayette, County of, Indiana
1719. Fishers, City of, Indiana
1720. Floyd, County of, Indiana
1721. Fort Wayne, City of, Indiana
1722. Fountain, County of, Indiana
1723. Frankfort, City of, Indiana
1724. Franklin, City of, Indiana
1725. Franklin, County of, Indiana
1726. Franklin, Township of, Indiana
1727. Fulton, County of, Indiana
1728. Gary, City of, Indiana
1729. Georgetown, Township of, Indiana
1730. Gibson, County of, Indiana
1731. Goshen, City of, Indiana
1732. Grant, County of, Indiana
1733. Greencastle, City of, Indiana
1734. Greencastle, Township of, Indiana
1735. Greene, County of, Indiana
1736. Greenfield, City of, Indiana
1737. Greensburg, City of, Indiana
1738. Greenwood, City of, Indiana
1739. Griffith, Town of, Indiana
1740. Guilford, Township of, Indiana
1741. Hamilton, County of, Indiana
1742. Hammond, City of, Indiana
1743. Hancock, County of, Indiana
1744. Hanover, Township of, Indiana
1745. Harris, Township of, Indiana
1746. Harrison, County of, Indiana
1747. Harrison, Township of, Indiana
1748. Hendricks, County of, Indiana
1749. Henry, County of, Indiana
1750. Henry, Township of, Indiana
1751. Highland, Town of, Indiana
1752. Hobart, City of, Indiana
1753. Hobart, Township of, Indiana
1754. Honey Creek, Township of, Indiana
1755. Howard, County of, Indiana
1756. Huntington, City of, Indiana
1757. Huntington, County of, Indiana
1758. Huntington, Township of, Indiana
1759. Jackson, County of, Indiana
1760. Jackson, Township of, Indiana
1761. Jasper, City of, Indiana
1762. Jasper, County of, Indiana
1763. Jay, County of, Indiana
1764. Jefferson, County of, Indiana
1765. Jefferson, Township of, Indiana
1766. Jeffersonville, City of, Indiana
1767. Jeffersonville, Township of, Indiana
1768. Jennings, County of, Indiana
1769. Johnson, County of, Indiana
1770. Keener, Township of, Indiana
1771. Knight, Township of, Indiana
1772. Knox, County of, Indiana
1773. Kokomo, City of, Indiana

1774. Kosciusko, County of, Indiana
1775. La Porte, City of, Indiana
1776. Lafayette, City of, Indiana
1777. LaGrange, County of, Indiana
1778. Lake, County of, Indiana
1779. Lake Station, City of, Indiana
1780. LaPorte, County of, Indiana
1781. Lawrence, City of, Indiana
1782. Lawrence, County of, Indiana
1783. Lawrence, Township of, Indiana
1784. Lawrenceburg, Township of, Indiana
1785. Lebanon, City of, Indiana
1786. Lincoln, Township of, Indiana
1787. Logansport, City of, Indiana
1788. Lost Creek, Township of, Indiana
1789. Madison, City of, Indiana
1790. Madison, County of, Indiana
1791. Madison, Township of, Indiana
1792. Marion, City of, Indiana
1793. Marion, County of/ Indianapolis, City of, Indiana
1794. Marshall, County of, Indiana
1795. Martin, County of, Indiana
1796. Martinsville, City of, Indiana
1797. Merrillville, Town of, Indiana
1798. Miami, County of, Indiana
1799. Michigan City, City of, Indiana
1800. Michigan, Township of, Indiana
1801. Mill, Township of, Indiana
1802. Mishawaka, City of, Indiana
1803. Monroe, County of, Indiana
1804. Montgomery, County of, Indiana
1805. Morgan, County of, Indiana
1806. Muncie, City of, Indiana
1807. Munster, Town of, Indiana
1808. New Albany, City of, Indiana
1809. New Albany, Township of, Indiana
1810. New Castle, City of, Indiana
1811. New Haven, City of, Indiana
1812. Newton, County of, Indiana
1813. Noble, County of, Indiana
1814. Noble, Township of, Indiana
1815. Noblesville, City of, Indiana
1816. Noblesville, Township of, Indiana
1817. North, Township of, Indiana
1818. Ohio, Township of, Indiana
1819. Orange, County of, Indiana
1820. Osolo, Township of, Indiana
1821. Owen, County of, Indiana
1822. Parke, County of, Indiana
1823. Patoka, Township of, Indiana
1824. Penn, Township of, Indiana
1825. Perry, County of, Indiana
1826. Perry, Township of, Indiana
1827. Peru, City of, Indiana
1828. Peru, Township of, Indiana
1829. Pigeon, Township of, Indiana
1830. Pike, County of, Indiana
1831. Pike, Township of, Indiana
1832. Pipe Creek, Township of, Indiana
1833. Plainfield, Town of, Indiana
1834. Pleasant, Township of, Indiana
1835. Portage, City of, Indiana
1836. Portage, Township of, Indiana
1837. Porter, County of, Indiana
1838. Posey, County of, Indiana
1839. Pulaski, County of, Indiana
1840. Putnam, County of, Indiana
1841. Randolph, County of, Indiana
1842. Richland, Township of, Indiana
1843. Richmond, City of, Indiana
1844. Ripley, County of, Indiana
1845. Ross, Township of, Indiana
1846. Rush, County of, Indiana
1847. Schererville, Town of, Indiana
1848. Scott, County of, Indiana
1849. Seymour, City of, Indiana
1850. Shawswick, Township of, Indiana
1851. Shelby, County of, Indiana
1852. Shelbyville, City of, Indiana
1853. Silver Creek, Township of, Indiana
1854. South Bend, City of, Indiana
1855. Speedway, Town of, Indiana
1856. Spencer, County of, Indiana
1857. St. John, Town of, Indiana
1858. St. John, Township of, Indiana
1859. St. Joseph, County of, Indiana
1860. St. Joseph, Township of, Indiana
1861. Starke, County of, Indiana
1862. Steuben, County of, Indiana
1863. Sugar Creek, Township of, Indiana
1864. Sullivan, County of, Indiana

1865. Switzerland, County of, Indiana
1866. Terre Haute, City of, Indiana
1867. Tippecanoe, County of, Indiana
1868. Tipton, County of, Indiana
1869. Troy, Township of, Indiana
1870. Union, Township of, Indiana
1871. Valparaiso, City of, Indiana
1872. Van Buren, Township of, Indiana
1873. Vanderburgh, County of, Indiana
1874. Vermillion, County of, Indiana
1875. Vernon, Township of, Indiana
1876. Vigo, County of, Indiana
1877. Vincennes, City of, Indiana
1878. Vincennes, Township of, Indiana
1879. Wabash, County of, Indiana
1880. Wabash, Township of, Indiana
1881. Warren, Township of, Indiana
1882. Warrick, County of, Indiana
1883. Warsaw, City of, Indiana
1884. Washington, City of, Indiana
1885. Washington, County of, Indiana
1886. Washington, Township of, Indiana
1887. Wayne, County of, Indiana
1888. Wayne, Township of, Indiana
1889. Wea, Township of, Indiana
1890. Wells, County of, Indiana
1891. West Lafayette, City of, Indiana
1892. Westchester, Township of, Indiana
1893. Westfield, City of, Indiana
1894. White, County of, Indiana
1895. White River, Township of, Indiana
1896. Whitley, County of, Indiana
1897. Winfield, Township of, Indiana
1898. Yorktown, Town of, Indiana
1899. Zionsville, Town of, Indiana
1900. Allamakee, County of, Iowa
1901. Altoona, City of, Iowa
1902. Ames, City of, Iowa
1903. Ankeny, City of, Iowa
1904. Appanoose, County of, Iowa
1905. Benton, County of, Iowa
1906. Bettendorf, City of, Iowa
1907. Black Hawk, County of, Iowa
1908. Boone, City of, Iowa
1909. Boone, County of, Iowa
1910. Bremer, County of, Iowa
1911. Buchanan, County of, Iowa
1912. Buena Vista, County of, Iowa
1913. Burlington, City of, Iowa
1914. Butler, County of, Iowa
1915. Carroll, County of, Iowa
1916. Cass, County of, Iowa
1917. Cedar, County of, Iowa
1918. Cedar Falls, City of, Iowa
1919. Cedar Rapids, City of, Iowa
1920. Cerro Gordo, County of, Iowa
1921. Cherokee, County of, Iowa
1922. Chickasaw, County of, Iowa
1923. Clay, County of, Iowa
1924. Clayton, County of, Iowa
1925. Clinton, City of, Iowa
1926. Clinton, County of, Iowa
1927. Clive, City of, Iowa
1928. Coralville, City of, Iowa
1929. Council Bluffs, City of, Iowa
1930. Crawford, County of, Iowa
1931. Dallas, County of, Iowa
1932. Davenport, City of, Iowa
1933. Delaware, County of, Iowa
1934. Des Moines, City of, Iowa
1935. Des Moines, County of, Iowa
1936. Dickinson, County of, Iowa
1937. Dubuque, City of, Iowa
1938. Dubuque, County of, Iowa
1939. Fairfield, City of, Iowa
1940. Fayette, County of, Iowa
1941. Floyd, County of, Iowa
1942. Fort Dodge, City of, Iowa
1943. Fort Madison, City of, Iowa
1944. Franklin, County of, Iowa
1945. Grimes, City of, Iowa
1946. Grundy, County of, Iowa
1947. Guthrie, County of, Iowa
1948. Hamilton, County of, Iowa
1949. Hancock, County of, Iowa
1950. Hardin, County of, Iowa
1951. Harrison, County of, Iowa
1952. Henry, County of, Iowa
1953. Indianola, City of, Iowa
1954. Iowa City, City of, Iowa
1955. Iowa, County of, Iowa
1956. Jackson, County of, Iowa

1957. Jasper, County of, Iowa
1958. Jefferson, County of, Iowa
1959. Johnson, County of, Iowa
1960. Johnston, City of, Iowa
1961. Jones, County of, Iowa
1962. Keokuk, City of, Iowa
1963. Keokuk, County of, Iowa
1964. Kossuth, County of, Iowa
1965. Le Mars, City of, Iowa
1966. Lee, County of, Iowa
1967. Linn, County of, Iowa
1968. Louisa, County of, Iowa
1969. Lyon, County of, Iowa
1970. Madison, County of, Iowa
1971. Mahaska, County of, Iowa
1972. Marion, City of, Iowa
1973. Marion, County of, Iowa
1974. Marshall, County of, Iowa
1975. Marshalltown, City of, Iowa
1976. Mason City, City of, Iowa
1977. Mills, County of, Iowa
1978. Mitchell, County of, Iowa
1979. Muscatine, City of, Iowa
1980. Muscatine, County of, Iowa
1981. Newton, City of, Iowa
1982. North Liberty, City of, Iowa
1983. Norwalk, City of, Iowa
1984. O'Brien, County of, Iowa
1985. Oskaloosa, City of, Iowa
1986. Ottumwa, City of, Iowa
1987. Page, County of, Iowa
1988. Pella, City of, Iowa
1989. Pleasant Hill, City of, Iowa
1990. Plymouth, County of, Iowa
1991. Polk, County of, Iowa
1992. Pottawattamie, County of, Iowa
1993. Poweshiek, County of, Iowa
1994. Scott, County of, Iowa
1995. Shelby, County of, Iowa
1996. Sioux City, City of, Iowa
1997. Sioux, County of, Iowa
1998. Spencer, City of, Iowa
1999. Storm Lake, City of, Iowa
2000. Story, County of, Iowa
2001. Tama, County of, Iowa
2002. Union, County of, Iowa
2003. Urbandale, City of, Iowa
2004. Wapello, County of, Iowa
2005. Warren, County of, Iowa
2006. Washington, County of, Iowa
2007. Waterloo, City of, Iowa
2008. Waukee, City of, Iowa
2009. Waverly, City of, Iowa
2010. Webster, County of, Iowa
2011. West Des Moines, City of, Iowa
2012. Winnebago, County of, Iowa
2013. Winneshiek, County of, Iowa
2014. Woodbury, County of, Iowa
2015. Wright, County of, Iowa
2016. Allen, County of, Kansas
2017. Andover, City of, Kansas
2018. Arkansas City, City of, Kansas
2019. Atchison, City of, Kansas
2020. Atchison, County of, Kansas
2021. Barton, County of, Kansas
2022. Bourbon, County of, Kansas
2023. Bruno, Township of, Kansas
2024. Butler, County of, Kansas
2025. Cherokee, County of, Kansas
2026. Cowley, County of, Kansas
2027. Crawford, County of, Kansas
2028. Derby, City of, Kansas
2029. Dickinson, County of, Kansas
2030. Dodge City, City of, Kansas
2031. Douglas, County of, Kansas
2032. El Dorado, City of, Kansas
2033. Ellis, County of, Kansas
2034. Emporia, City of, Kansas
2035. Fairmount, Township of, Kansas
2036. Finney, County of, Kansas
2037. Ford, County of, Kansas
2038. Franklin, County of, Kansas
2039. Garden City, City of, Kansas
2040. Gardner, City of, Kansas
2041. Geary, County of, Kansas
2042. Great Bend, City of, Kansas
2043. Harvey, County of, Kansas
2044. Hays, City of, Kansas
2045. Haysville, City of, Kansas
2046. Haysville, City of, Kansas
2047. Hutchinson, City of, Kansas
2048. Jackson, County of, Kansas

2049. Jefferson, County of, Kansas
2050. Johnson, County of, Kansas
2051. Junction City, City of, Kansas
2052. Kansas City, City of, Kansas
2053. Kansas City, City of, Kansas
2054. Labette, County of, Kansas
2055. Lansing, City of, Kansas
2056. Lawrence, City of, Kansas
2057. Lawrence, City of, Kansas
2058. Leavenworth, City of, Kansas
2059. Leavenworth, County of, Kansas
2060. Leawood, City of, Kansas
2061. Lenexa, City of, Kansas
2062. Liberal, City of, Kansas
2063. Lyon, County of, Kansas
2064. Madison, Township of, Kansas
2065. Manhattan, City of, Kansas
2066. Marion, County of, Kansas
2067. McPherson, City of, Kansas
2068. McPherson, County of, Kansas
2069. Merriam, City of, Kansas
2070. Miami, County of, Kansas
2071. Montgomery, County of, Kansas
2072. Nemaha, County of, Kansas
2073. Neosho, County of, Kansas
2074. Newton, City of, Kansas
2075. Olathe, City of, Kansas
2076. Osage, County of, Kansas
2077. Ottawa, City of, Kansas
2078. Overland Park, City of, Kansas
2079. Pittsburg, City of, Kansas
2080. Pottawatomie, County of, Kansas
2081. Prairie, Village of, City of, Kansas
2082. Reno, County of, Kansas
2083. Riley, County of, Kansas
2084. Riverside, Township of, Kansas
2085. Rockford, Township of, Kansas
2086. Salina, City of, Kansas
2087. Saline, County of, Kansas
2088. Sedgwick, County of, Kansas
2089. Seward, County of, Kansas
2090. Shawnee, City of, Kansas
2091. Shawnee, County of, Kansas
2092. Soldier, Township of, Kansas
2093. Sumner, County of, Kansas
2094. Topeka, City of, Kansas
2095. Wichita, City of, Kansas
2096. Winfield, City of, Kansas
2097. Wyandotte, County of, Kansas
2098. Adair, County of, Kentucky
2099. Allen, County of, Kentucky
2100. Anderson, County of, Kentucky
2101. Ashland, City of, Kentucky
2102. Bardstown, City of, Kentucky
2103. Barren, County of, Kentucky
2104. Bath, County of, Kentucky
2105. Bell, County of, Kentucky
2106. Berea, City of, Kentucky
2107. Boone, County of, Kentucky
2108. Bourbon, County of, Kentucky
2109. Bowling Green, City of, Kentucky
2110. Boyd, County of, Kentucky
2111. Boyle, County of, Kentucky
2112. Breathitt, County of, Kentucky
2113. Breckinridge, County of, Kentucky
2114. Bullitt, County of, Kentucky
2115. Butler, County of, Kentucky
2116. Caldwell, County of, Kentucky
2117. Calloway, County of, Kentucky
2118. Campbell, County of, Kentucky
2119. Campbellsville, City of, Kentucky
2120. Carroll, County of, Kentucky
2121. Carter, County of, Kentucky
2122. Casey, County of, Kentucky
2123. Christian, County of, Kentucky
2124. Clark, County of, Kentucky
2125. Clay, County of, Kentucky
2126. Clinton, County of, Kentucky
2127. Covington, City of, Kentucky
2128. Danville, City of, Kentucky
2129. Daviess, County of, Kentucky
2130. Edmonson, County of, Kentucky
2131. Elizabethtown, City of, Kentucky
2132. Erlanger, City of, Kentucky
2133. Estill, County of, Kentucky
2134. Fleming, County of, Kentucky
2135. Florence, City of, Kentucky
2136. Floyd, County of, Kentucky
2137. Fort Thomas, City of, Kentucky
2138. Frankfort, City of, Kentucky
2139. Franklin, County of, Kentucky
2140. Garrard, County of, Kentucky

2141. Georgetown, City of, Kentucky
2142. Glasgow, City of, Kentucky
2143. Grant, County of, Kentucky
2144. Graves, County of, Kentucky
2145. Grayson, County of, Kentucky
2146. Green, County of, Kentucky
2147. Greenup, County of, Kentucky
2148. Hardin, County of, Kentucky
2149. Harlan, County of, Kentucky
2150. Harrison, County of, Kentucky
2151. Hart, County of, Kentucky
2152. Henderson, City of, Kentucky
2153. Henderson, County of, Kentucky
2154. Henry, County of, Kentucky
2155. Hopkins, County of, Kentucky
2156. Hopkinsville, City of, Kentucky
2157. Independence, City of, Kentucky
2158. Jackson, County of, Kentucky
2159. Jeffersontown, City of, Kentucky
2160. Jessamine, County of, Kentucky
2161. Johnson, County of, Kentucky
2162. Kenton, County of, Kentucky
2163. Knott, County of, Kentucky
2164. Knox, County of, Kentucky
2165. Larue, County of, Kentucky
2166. Laurel, County of, Kentucky
2167. Lawrence, County of, Kentucky
2168. Lawrenceburg, City of, Kentucky
2169. Letcher, County of, Kentucky
2170. Lewis, County of, Kentucky
2171. Lexington-Fayette, Urban County of, Kentucky
2172. Lincoln, County of, Kentucky
2173. Logan, County of, Kentucky
2174. Louisville/Jefferson, County Metro of, Kentucky
2175. Lyndon, City of, Kentucky
2176. Madison, County of, Kentucky
2177. Madisonville, City of, Kentucky
2178. Magoffin, County of, Kentucky
2179. Marion, County of, Kentucky
2180. Marshall, County of, Kentucky
2181. Martin, County of, Kentucky
2182. Mason, County of, Kentucky
2183. McCracken, County of, Kentucky
2184. McCreary, County of, Kentucky
2185. Meade, County of, Kentucky
2186. Mercer, County of, Kentucky
2187. Metcalfe, County of, Kentucky
2188. Monroe, County of, Kentucky
2189. Montgomery, County of, Kentucky
2190. Morgan, County of, Kentucky
2191. Mount Washington, City of, Kentucky
2192. Muhlenberg, County of, Kentucky
2193. Murray, City of, Kentucky
2194. Nelson, County of, Kentucky
2195. Newport, City of, Kentucky
2196. Nicholasville, City of, Kentucky
2197. Ohio, County of, Kentucky
2198. Oldham, County of, Kentucky
2199. Owen, County of, Kentucky
2200. Owensboro, City of, Kentucky
2201. Paducah, City of, Kentucky
2202. Pendleton, County of, Kentucky
2203. Perry, County of, Kentucky
2204. Pike, County of, Kentucky
2205. Powell, County of, Kentucky
2206. Pulaski, County of, Kentucky
2207. Radcliff, City of, Kentucky
2208. Richmond, City of, Kentucky
2209. Rockcastle, County of, Kentucky
2210. Rowan, County of, Kentucky
2211. Russell, County of, Kentucky
2212. Scott, County of, Kentucky
2213. Shelby, County of, Kentucky
2214. Shelbyville, City of, Kentucky
2215. Shepherdsville, City of, Kentucky
2216. Shively, City of, Kentucky
2217. Simpson, County of, Kentucky
2218. Somerset, City of, Kentucky
2219. Spencer, County of, Kentucky
2220. St. Matthews, City of, Kentucky
2221. Taylor, County of, Kentucky
2222. Todd, County of, Kentucky
2223. Trigg, County of, Kentucky
2224. Union, County of, Kentucky
2225. Warren, County of, Kentucky
2226. Washington, County of, Kentucky
2227. Wayne, County of, Kentucky
2228. Webster, County of, Kentucky
2229. Whitley, County of, Kentucky

2230. Winchester, City of, Kentucky
2231. Woodford, County of, Kentucky
2232. Morgan, County of, Kentucky
Louisiana
2233. Abbeville, City of, Louisiana
2234. Acadia, Parish of, Louisiana
2235. Alexandria, City of, Louisiana
2236. Allen, Parish of, Louisiana
2237. Ascension, Parish of, Louisiana
2238. Assumption, Parish of, Louisiana
2239. Avoyelles, Parish of, Louisiana
2240. Baker, City of, Louisiana
2241. Bastrop, City of, Louisiana
2242. Baton Rouge, City of, Louisiana
2243. Beauregard, Parish of, Louisiana
2244. Bienville, Parish of, Louisiana
2245. Bogalusa, City of, Louisiana
2246. Bossier City, City of, Louisiana
2247. Bossier, Parish of, Louisiana
2248. Broussard, City of, Louisiana
2249. Caddo, Parish of, Louisiana
2250. Calcasieu, Parish of, Louisiana
2251. Central, City of, Louisiana
2252. Claiborne, Parish of, Louisiana
2253. Concordia, Parish of, Louisiana
2254. Covington, City of, Louisiana
2255. Crowley, City of, Louisiana
2256. De Soto, Parish of, Louisiana
2257. DeRidder, City of, Louisiana
2258. East Baton Rouge, Parish of,
Louisiana
2259. East Feliciana, Parish of, Louisiana
2260. Evangeline, Parish of, Louisiana
2261. Franklin, Parish of, Louisiana
2262. Gonzales, City of, Louisiana
2263. Grant, Parish of, Louisiana
2264. Gretna, City of, Louisiana
2265. Hammond, City of, Louisiana
2266. Iberia, Parish of, Louisiana
2267. Iberville, Parish of, Louisiana
2268. Jackson, Parish of, Louisiana
2269. Jefferson Davis, Parish of, Louisiana
2270. Jefferson, Parish of, Louisiana
2271. Kenner, City of, Louisiana
2272. Lafayette, City of, Louisiana
2273. Lafayette, Parish of, Louisiana
2274. Lafourche, Parish of, Louisiana
2275. Lake Charles, City of, Louisiana
2276. LaSalle, Parish of, Louisiana
2277. Lincoln, Parish of, Louisiana
2278. Livingston, Parish of, Louisiana
2279. Madison, Parish of, Louisiana
2280. Mandeville, City of, Louisiana
2281. Minden, City of, Louisiana
2282. Monroe, City of, Louisiana
2283. Morehouse, Parish of, Louisiana
2284. Morgan City, City of, Louisiana
2285. Natchitoches, City of, Louisiana
2286. Natchitoches, Parish of, Louisiana
2287. New Iberia, City of, Louisiana
2288. New Orleans, City of, Louisiana
2289. Orleans, Parish of, Louisiana
2290. Opelousas, City of, Louisiana
2291. Ouachita, Parish of, Louisiana
2292. Pineville, City of, Louisiana
2293. Plaquemines, Parish of, Louisiana
2294. Pointe Coupee, Parish of, Louisiana
2295. Rapides, Parish of, Louisiana
2296. Richland, Parish of, Louisiana
2297. Ruston, City of, Louisiana
2298. Sabine, Parish of, Louisiana
2299. Shreveport, City of, Louisiana
2300. Slidell, City of, Louisiana
2301. St. Bernard, Parish of, Louisiana
2302. St. Charles, Parish of, Louisiana
2303. St. Helena, Parish of, Louisiana
2304. St. James, Parish of, Louisiana
2305. St. John the Baptist, Parish of,
Louisiana
2306. St. Landry, Parish of, Louisiana
2307. St. Martin, Parish of, Louisiana
2308. St. Mary, Parish of, Louisiana
2309. St. Tammany, Parish of, Louisiana
2310. Sulphur, City of, Louisiana
2311. Tangipahoa, Parish of, Louisiana
2312. Terrebonne, Parish of/ Houma, City
of, Louisiana
2313. Thibodaux, City of, Louisiana
2314. Union, Parish of, Louisiana
2315. Vermilion, Parish of, Louisiana
2316. Vernon, Parish of, Louisiana
2317. Washington, Parish of, Louisiana

2318. Webster, Parish of, Louisiana
2319. West Baton Rouge, Parish of, Louisiana
2320. West Carroll, Parish of, Louisiana
2321. West Feliciana, Parish of, Louisiana
2322. West Monroe, City of, Louisiana
2323. Winn, Parish of, Louisiana
2324. Youngsville, City of, Louisiana
2325. Zachary, City of, Louisiana
2326. Androscoggin, County of, Maine
2327. Aroostook, County of, Maine
2328. Auburn, City of, Maine
2329. Augusta, City of, Maine
2330. Bangor, City of, Maine
2331. Biddeford, City of, Maine
2332. Brunswick, Town of, Maine
2333. Cumberland, County of, Maine
2334. Falmouth, Town of, Maine
2335. Franklin, County of, Maine
2336. Gorham, Town of, Maine
2337. Hancock, County of, Maine
2338. Kennebec, County of, Maine
2339. Kennebunk, Town of, Maine
2340. Knox, County of, Maine
2341. Lewiston, City of, Maine
2342. Lincoln, County of, Maine
2343. Orono, Town of, Maine
2344. Oxford, County of, Maine
2345. Penobscot, County of, Maine
2346. Piscataquis, County of, Maine
2347. Portland, City of, Maine
2348. Saco, City of, Maine
2349. Sagadahoc, County of, Maine
2350. Sanford, City of, Maine
2351. Scarborough, Town of, Maine
2352. Somerset, County of, Maine
2353. South Portland, City of, Maine
2354. Standish, Town of, Maine
2355. Waldo, County of, Maine
2356. Washington, County of, Maine
2357. Waterville, City of, Maine
2358. Wells, Town of, Maine
2359. Westbrook, City of, Maine
2360. Windham, Town of, Maine
2361. York, County of, Maine
2362. York, Town of, Maine
2363. Aberdeen, City of, Maryland
2364. Allegany, County of, Maryland
2365. Annapolis, City of, Maryland
2366. Anne Arundel, County of, Maryland
2367. Baltimore, City of, Maryland
2368. Baltimore, County of, Maryland
2369. Bel Air, Town of, Maryland
2370. Bowie, City of, Maryland
2371. Calvert, County of, Maryland
2372. Cambridge, City of, Maryland
2373. Caroline, County of, Maryland
2374. Carroll, County of, Maryland
2375. Cecil, County of, Maryland
2376. Charles, County of, Maryland
2377. College Park, City of, Maryland
2378. Cumberland, City of, Maryland
2379. Dorchester, County of, Maryland
2380. Easton, Town of, Maryland
2381. Elkton, Town of, Maryland
2382. Frederick, City of, Maryland
2383. Frederick, County of, Maryland
2384. Gaithersburg, City of, Maryland
2385. Garrett, County of, Maryland
2386. Greenbelt, City of, Maryland
2387. Hagerstown, City of, Maryland
2388. Harford, County of, Maryland
2389. Havre de Grace, City of, Maryland
2390. Howard, County of, Maryland
2391. Hyattsville, City of, Maryland
2392. Kent, County of, Maryland
2393. Laurel, City of, Maryland
2394. Montgomery, County of, Maryland
2395. New Carrollton, City of, Maryland
2396. Prince George's, County of, Maryland
2397. Queen Anne's, County of, Maryland
2398. Rockville, City of, Maryland
2399. Salisbury, City of, Maryland
2400. Somerset, County of, Maryland
2401. St. Mary's, County of, Maryland
2402. Takoma Park, City of, Maryland
2403. Talbot, County of, Maryland
2404. Washington, County of, Maryland
2405. Westminster, City of, Maryland
2406. Wicomico, County of, Maryland
2407. Worcester, County of, Maryland

2408. Abington, Town of, Massachusetts
2409. Acton, Town of, Massachusetts
2410. Acushnet, Town of, Massachusetts
2411. Agawam, Town of/ City of, Massachusetts
2412. Amesbury, Town of/ City of, Massachusetts
2413. Amherst, Town of, Massachusetts
2414. Andover, Town of, Massachusetts
2415. Arlington, Town of, Massachusetts
2416. Ashland, Town of, Massachusetts
2417. Athol, Town of, Massachusetts
2418. Attleboro, City of, Massachusetts
2419. Auburn, Town of, Massachusetts
2420. Barnstable, County of, Massachusetts
2421. Barnstable, Town of/ City of, Massachusetts
2422. Bedford, Town of, Massachusetts
2423. Belchertown, Town of, Massachusetts
2424. Bellingham, Town of, Massachusetts
2425. Belmont, Town of, Massachusetts
2426. Beverly, City of, Massachusetts
2427. Billerica, Town of, Massachusetts
2428. Boston, City of, Massachusetts
2429. Bourne, Town of, Massachusetts
2430. Braintree, Town of/ City of, Massachusetts
2431. Bridgewater, Town of/ City of, Massachusetts
2432. Bristol, County of, Massachusetts
2433. Brockton, City of, Massachusetts
2434. Brookline, Town of, Massachusetts
2435. Burlington, Town of, Massachusetts
2436. Cambridge, City of, Massachusetts
2437. Canton, Town of, Massachusetts
2438. Carver, Town of, Massachusetts
2439. Charlton, Town of, Massachusetts
2440. Chelmsford, Town of, Massachusetts
2441. Chelsea, City of, Massachusetts
2442. Chicopee, City of, Massachusetts
2443. Clinton, Town of, Massachusetts
2444. Concord, Town of, Massachusetts
2445. Danvers, Town of, Massachusetts
2446. Dartmouth, Town of, Massachusetts
2447. Dedham, Town of, Massachusetts
2448. Dennis, Town of, Massachusetts
2449. Dracut, Town of, Massachusetts
2450. Dudley, Town of, Massachusetts
2451. Dukes, County of, Massachusetts
2452. Duxbury, Town of, Massachusetts
2453. East Bridgewater, Town of, Massachusetts
2454. East Longmeadow, Town of, Massachusetts
2455. Easthampton, Town of, City of, Massachusetts
2456. Easton, Town of, Massachusetts
2457. Everett, City of, Massachusetts
2458. Fairhaven, Town of, Massachusetts
2459. Fall River, City of, Massachusetts
2460. Falmouth, Town of, Massachusetts
2461. Fitchburg, City of, Massachusetts
2462. Foxborough, Town of, Massachusetts
2463. Framingham, City of, Massachusetts
2464. Franklin, Town of, City of, Massachusetts
2465. Gardner, City of, Massachusetts
2466. Gloucester, City of, Massachusetts
2467. Grafton, Town of, Massachusetts
2468. Greenfield, Town of, City of, Massachusetts
2469. Groton, Town of, Massachusetts
2470. Hanover, Town of, Massachusetts
2471. Hanson, Town of, Massachusetts
2472. Harwich, Town of, Massachusetts
2473. Haverhill, City of, Massachusetts
2474. Hingham, Town of, Massachusetts
2475. Holbrook, Town of, Massachusetts
2476. Holden, Town of, Massachusetts
2477. Holliston, Town of, Massachusetts
2478. Holyoke, City of, Massachusetts
2479. Hopkinton, Town of, Massachusetts
2480. Hudson, Town of, Massachusetts
2481. Hull, Town of, Massachusetts
2482. Ipswich, Town of, Massachusetts
2483. Kingston, Town of, Massachusetts
2484. Lakeville, Town of, Massachusetts
2485. Lawrence, City of, Massachusetts
2486. Leicester, Town of, Massachusetts

2487. Leominster, City of, Massachusetts
2488. Lexington, Town of, Massachusetts
2489. Littleton, Town of, Massachusetts
2490. Longmeadow, Town of, Massachusetts
2491. Lowell, City of, Massachusetts
2492. Ludlow, Town of, Massachusetts
2493. Lunenburg, Town of, Massachusetts
2494. Lynn, City of, Massachusetts
2495. Lynnfield, Town of, Massachusetts
2496. Malden, City of, Massachusetts
2497. Mansfield, Town of, Massachusetts
2498. Marblehead, Town of, Massachusetts
2499. Marlborough, City of, Massachusetts
2500. Marshfield, Town of, Massachusetts
2501. Mashpee, Town of, Massachusetts
2502. Maynard, Town of, Massachusetts
2503. Medfield, Town of, Massachusetts
2504. Medford, City of, Massachusetts
2505. Medway, Town of, Massachusetts
2506. Melrose, City of, Massachusetts
2507. Methuen, Town of, City of, Massachusetts
2508. Middleborough, Town of, Massachusetts
2509. Middleton, Town of, Massachusetts
2510. Milford, Town of, Massachusetts
2511. Millbury, Town of, Massachusetts
2512. Milton, Town of, Massachusetts
2513. Nantucket, Town of/ County of, Massachusetts
2514. Natick, Town of, Massachusetts
2515. Needham, Town of, Massachusetts
2516. New Bedford, City of, Massachusetts
2517. Newburyport, City of, Massachusetts
2518. Newton, City of, Massachusetts
2519. Norfolk, County of, Massachusetts
2520. Norfolk, Town of, Massachusetts
2521. North Adams, City of, Massachusetts
2522. North Andover, Town of, Massachusetts
2523. North Attleborough, Town of, Massachusetts
2524. North Reading, Town of, Massachusetts
2525. Northampton, City of, Massachusetts
2526. Northborough, Town of, Massachusetts
2527. Northbridge, Town of, Massachusetts
2528. Norton, Town of, Massachusetts
2529. Norwell, Town of, Massachusetts
2530. Norwood, Town of, Massachusetts
2531. Oxford, Town of, Massachusetts
2532. Palmer, Town of/ City of, Massachusetts
2533. Peabody, City of, Massachusetts
2534. Pembroke, Town of, Massachusetts
2535. Pepperell, Town of, Massachusetts
2536. Pittsfield, City of, Massachusetts
2537. Plymouth, County of, Massachusetts
2538. Plymouth, Town of, Massachusetts
2539. Quincy, City of, Massachusetts
2540. Randolph, Town of/ City of, Massachusetts
2541. Raynham, Town of, Massachusetts
2542. Reading, Town of, Massachusetts
2543. Rehoboth, Town of, Massachusetts
2544. Revere, City of, Massachusetts
2545. Rockland, Town of, Massachusetts
2546. Salem, City of, Massachusetts
2547. Sandwich, Town of, Massachusetts
2548. Saugus, Town of, Massachusetts
2549. Scituate, Town of, Massachusetts
2550. Seekonk, Town of, Massachusetts
2551. Sharon, Town of, Massachusetts
2552. Shrewsbury, Town of, Massachusetts
2553. Somerset, Town of, Massachusetts
2554. Somerville, City of, Massachusetts
2555. South Hadley, Town of, Massachusetts
2556. Southborough, Town of, Massachusetts
2557. Southbridge, Town of/ City of, Massachusetts
2558. Spencer, Town of, Massachusetts
2559. Springfield, City of, Massachusetts
2560. Stoneham, Town of, Massachusetts
2561. Stoughton, Town of, Massachusetts
2562. Sudbury, Town of, Massachusetts
2563. Swampscott, Town of, Massachusetts

2564. Swansea, Town of, Massachusetts
2565. Taunton, City of, Massachusetts
2566. Tewksbury, Town of, Massachusetts
2567. Tyngsborough, Town of, Massachusetts
2568. Uxbridge, Town of, Massachusetts
2569. Wakefield, Town of, Massachusetts
2570. Walpole, Town of, Massachusetts
2571. Waltham, City of, Massachusetts
2572. Wareham, Town of, Massachusetts
2573. Watertown, Town of/ City of, Massachusetts
2574. Wayland, Town of, Massachusetts
2575. Webster, Town of, Massachusetts
2576. Wellesley, Town of, Massachusetts
2577. West Springfield, Town of/ City of, Massachusetts
2578. Westborough, Town of, Massachusetts
2579. Westfield, City of, Massachusetts
2580. Westford, Town of, Massachusetts
2581. Weston, Town of, Massachusetts
2582. Westport, Town of, Massachusetts
2583. Westwood, Town of, Massachusetts
2584. Weymouth, Town of/ City of, Massachusetts
2585. Whitman, Town of, Massachusetts
2586. Wilbraham, Town of, Massachusetts
2587. Wilmington, Town of, Massachusetts
2588. Winchendon, Town of, Massachusetts
2589. Winchester, Town of, Massachusetts
2590. Winthrop, Town of/ City of, Massachusetts
2591. Woburn, City of, Massachusetts
2592. Worcester, City of, Massachusetts
2593. Wrentham, Town of, Massachusetts
2594. Yarmouth, Town of, Massachusetts
2595. Ada, Township of, Michigan
2596. Adrian, City of, Michigan
2597. Alcona, County of, Michigan
2598. Algoma, Township of, Michigan
2599. Allegan, County of, Michigan
2600. Allen Park, City of, Michigan
2601. Allendale, Charter Township of, Michigan
2602. Alpena, County of, Michigan
2603. Alpine, Township of, Michigan
2604. Ann Arbor, City of, Michigan
2605. Antrim, County of, Michigan
2606. Antwerp, Township of, Michigan
2607. Arenac, County of, Michigan
2608. Auburn Hills, City of, Michigan
2609. Bangor, Charter Township of, Michigan
2610. Barry, County of, Michigan
2611. Bath, Charter Township of, Michigan
2612. Battle Creek, City of, Michigan
2613. Bay City, City of, Michigan
2614. Bay, County of, Michigan
2615. Bedford, Township of, Michigan
2616. Benton, Charter Township of, Michigan
2617. Benzie, County of, Michigan
2618. Berkley, City of, Michigan
2619. Berrien, County of, Michigan
2620. Beverly Hills, Village of, Michigan
2621. Big Rapids, City of, Michigan
2622. Birmingham, City of, Michigan
2623. Blackman, Charter Township of, Michigan
2624. Bloomfield, Charter Township of, Michigan
2625. Branch, County of, Michigan
2626. Brandon, Charter Township of, Michigan
2627. Brighton, Township of, Michigan
2628. Brownstown, Charter Township of, Michigan
2629. Burton, City of, Michigan
2630. Byron, Township of, Michigan
2631. Cadillac, City of, Michigan
2632. Caledonia, Township of, Michigan
2633. Calhoun, County of, Michigan
2634. Cannon, Township of, Michigan
2635. Canton, Charter Township of, Michigan
2636. Cascade, Charter Township of, Michigan

2637. Cass, County of, Michigan
2638. Charlevoix, County of, Michigan
2639. Cheboygan, County of, Michigan
2640. Chesterfield, Township of, Michigan
2641. Chippewa, County of, Michigan
2642. Clare, County of, Michigan
2643. Clawson, City of, Michigan
2644. Clinton, Charter Township of, Michigan
2645. Clinton, County of, Michigan
2646. Coldwater, City of, Michigan
2647. Commerce, Charter Township of, Michigan
2648. Comstock, Charter Township of, Michigan
2649. Cooper, Charter Township of, Michigan
2650. Crawford, County of, Michigan
2651. Davison, Township of, Michigan
2652. Dearborn, City of, Michigan
2653. Dearborn Heights, City of, Michigan
2654. Delhi, Charter Township of, Michigan
2655. Delta, Charter Township of, Michigan
2656. Delta, County of, Michigan
2657. Detroit, City of, Michigan
2658. DeWitt, Charter Township of, Michigan
2659. Dickinson, County of, Michigan
2660. East Bay, Township of, Michigan
2661. East Grand Rapids, City of, Michigan
2662. East Lansing, City of, Michigan
2663. Eastpointe, City of, Michigan
2664. Eaton, County of, Michigan
2665. Egelston, Township of, Michigan
2666. Emmet, County of, Michigan
2667. Emmett, Charter Township of, Michigan
2668. Escanaba, City of, Michigan
2669. Farmington, City of, Michigan
2670. Farmington Hills, City of, Michigan
2671. Fenton, Charter Township of, Michigan
2672. Fenton, City of, Michigan
2673. Ferndale, City of, Michigan
2674. Flat Rock, City of, Michigan
2675. Flint, Charter Township of, Michigan
2676. Flint, City of, Michigan
2677. Flushing, Charter Township of, Michigan
2678. Fort Gratiot, Charter Township of, Michigan
2679. Fraser, City of, Michigan
2680. Frenchtown, Township of, Michigan
2681. Fruitport, Charter Township of, Michigan
2682. Gaines, Charter Township of, Michigan
2683. Garden City, City of, Michigan
2684. Garfield, Charter Township of, Michigan
2685. Genesee, Charter Township of, Michigan
2686. Genesee, County of, Michigan
2687. Genoa, Township of, Michigan
2688. Georgetown, Charter Township of, Michigan
2689. Gladwin, County of, Michigan
2690. Gogebic, County of, Michigan
2691. Grand Blanc, Charter Township of, Michigan
2692. Grand Haven, Charter Township of, Michigan
2693. Grand Haven, City of, Michigan
2694. Grand Rapids, Charter Township of, Michigan
2695. Grand Rapids, City of, Michigan
2696. Grand Traverse, County of, Michigan
2697. Grandville, City of, Michigan
2698. Gratiot, County of, Michigan
2699. Green Oak, Township of, Michigan
2700. Grosse Ile, Township of, Michigan
2701. Grosse Pointe Park, City of, Michigan
2702. Grosse Pointe Woods, City of, Michigan
2703. Hamburg, Township of, Michigan
2704. Hamtramck, City of, Michigan

2705. Harper Woods, City of, Michigan
2706. Harrison, Charter Township of, Michigan
2707. Hartland, Township of, Michigan
2708. Hazel Park, City of, Michigan
2709. Highland, Charter Township of, Michigan
2710. Highland Park, City of, Michigan
2711. Hillsdale, County of, Michigan
2712. Holland, Charter Township of, Michigan
2713. Holland, City of, Michigan
2714. Holly, Township of, Michigan
2715. Houghton, County of, Michigan
2716. Huron, Charter Township of, Michigan
2717. Huron, County of, Michigan
2718. Independence, Charter Township of, Michigan
2719. Ingham, County of, Michigan
2720. Inkster, City of, Michigan
2721. Ionia, City of, Michigan
2722. Ionia, County of, Michigan
2723. Iosco, County of, Michigan
2724. Iron, County of, Michigan
2725. Isabella, County of, Michigan
2726. Jackson, City of, Michigan
2727. Jackson, County of, Michigan
2728. Kalamazoo, Charter Township of, Michigan
2729. Kalamazoo, City of, Michigan
2730. Kalamazoo, County of, Michigan
2731. Kalkaska, County of, Michigan
2732. Kent, County of, Michigan
2733. Kentwood, City of, Michigan
2734. Lake, County of, Michigan
2735. Lansing, City of, Michigan
2736. Lapeer, County of, Michigan
2737. Leelanau, County of, Michigan
2738. Lenawee, County of, Michigan
2739. Lenox, Township of, Michigan
2740. Leoni, Township of, Michigan
2741. Lincoln, Charter Township of, Michigan
2742. Lincoln Park, City of, Michigan
2743. Livingston, County of, Michigan
2744. Livonia, City of, Michigan
2745. Lyon, Charter Township of, Michigan
2746. Mackinac, County of, Michigan
2747. Macomb, County of, Michigan
2748. Macomb, Township of, Michigan
2749. Madison Heights, City of, Michigan
2750. Manistee, County of, Michigan
2751. Marion, Township of, Michigan
2752. Marquette, City of, Michigan
2753. Marquette, County of, Michigan
2754. Mason, County of, Michigan
2755. Mecosta, County of, Michigan
2756. Melvindale, City of, Michigan
2757. Menominee, County of, Michigan
2758. Meridian, Charter Township of, Michigan
2759. Midland, City of, Michigan
2760. Midland, County of, Michigan
2761. Milford, Charter Township of, Michigan
2762. Missaukee, County of, Michigan
2763. Monitor, Charter Township of, Michigan
2764. Monroe, Charter Township of, Michigan
2765. Monroe, City of, Michigan
2766. Monroe, County of, Michigan
2767. Montcalm, County of, Michigan
2768. Mount Clemens, City of, Michigan
2769. Mount Morris, Township of, Michigan
2770. Mount Pleasant, City of, Michigan
2771. Mundy, Township of, Michigan
2772. Muskegon, Charter Township of, Michigan
2773. Muskegon, City of, Michigan
2774. Muskegon, County of, Michigan
2775. Muskegon Heights, City of, Michigan
2776. New Baltimore, City of, Michigan
2777. Newaygo, County of, Michigan
2778. Niles, City of, Michigan
2779. Niles, Township of, Michigan
2780. Northville, Township of, Michigan
2781. Norton Shores, City of, Michigan

2782. Novi, City of, Michigan
2783. Oak Park, City of, Michigan
2784. Oakland, Charter Township of, Michigan
2785. Oakland, County of, Michigan
2786. Oceana, County of, Michigan
2787. Oceola, Township of, Michigan
2788. Ogemaw, County of, Michigan
2789. Orion, Charter Township of, Michigan
2790. Osceola, County of, Michigan
2791. Oshtemo, Charter Township of, Michigan
2792. Otsego, County of, Michigan
2793. Ottawa, County of, Michigan
2794. Owosso, City of, Michigan
2795. Oxford, Charter Township of, Michigan
2796. Park, Township of, Michigan
2797. Pittsfield, Charter Township of, Michigan
2798. Plainfield, Charter Township of, Michigan
2799. Plymouth, Charter Township of, Michigan
2800. Pontiac, City of, Michigan
2801. Port Huron, Charter Township of, Michigan
2802. Port Huron, City of, Michigan
2803. Portage, City of, Michigan
2804. Presque Isle, County of, Michigan
2805. Redford, Charter Township of, Michigan
2806. Riverview, City of, Michigan
2807. Rochester, City of, Michigan
2808. Rochester Hills, City of, Michigan
2809. Romulus, City of, Michigan
2810. Roscommon, County of, Michigan
2811. Roseville, City of, Michigan
2812. Royal Oak, City of, Michigan
2813. Saginaw, Charter Township of, Michigan
2814. Saginaw, City of, Michigan
2815. Saginaw, County of, Michigan
2816. Sanilac, County of, Michigan
2817. Sault Ste. Marie, City of, Michigan
2818. Scio, Township of, Michigan
2819. Shelby, Charter Township of, Michigan
2820. Shiawassee, County of, Michigan
2821. South Lyon, City of, Michigan
2822. Southfield, City of, Michigan
2823. Southfield, Township of, Michigan
2824. Southgate, City of, Michigan
2825. Spring Lake, Township of, Michigan
2826. Springfield, Charter Township of, Michigan
2827. St. Clair, County of, Michigan
2828. St. Clair Shores, City of, Michigan
2829. St. Joseph, County of, Michigan
2830. Sterling Heights, City of, Michigan
2831. Sturgis, City of, Michigan
2832. Summit, Township of, Michigan
2833. Superior, Charter Township of, Michigan
2834. Taylor, City of, Michigan
2835. Texas, Charter Township of, Michigan
2836. Thomas, Township of, Michigan
2837. Traverse City, City of, Michigan
2838. Trenton, City of, Michigan
2839. Troy, City of, Michigan
2840. Tuscola, County of, Michigan
2841. Tyrone, Township of, Michigan
2842. Union, Charter Township of, Michigan
2843. Van Buren, Charter Township of, Michigan
2844. Van Buren, County of, Michigan
2845. Vienna, Charter Township of, Michigan
2846. Walker, City of, Michigan
2847. Warren, City of, Michigan
2848. Washington, Township of, Michigan
2849. Washtenaw, County of, Michigan
2850. Waterford, Charter Township of, Michigan
2851. Wayne, City of, Michigan
2852. Wayne, County of, Michigan
2853. West Bloomfield, Charter Township of, Michigan
2854. Westland, City of, Michigan

2855. Wexford, County of, Michigan
2856. White Lake, Charter Township of, Michigan
2857. Wixom, City of, Michigan
2858. Woodhaven, City of, Michigan
2859. Wyandotte, City of, Michigan
2860. Wyoming, City of, Michigan
2861. Ypsilanti, Charter Township of, Michigan
2862. Ypsilanti, City of, Michigan
2863. Zeeland, Charter Township of, Michigan
2864. Aitkin, County of, Minnesota
2865. Albert Lea, City of, Minnesota
2866. Alexandria, City of, Minnesota
2867. Andover, City of, Minnesota
2868. Anoka, City of, Minnesota
2869. Anoka, County of, Minnesota
2870. Apple Valley, City of, Minnesota
2871. Arden Hills, City of, Minnesota
2872. Austin, City of, Minnesota
2873. Becker, County of, Minnesota
2874. Beltrami, County of, Minnesota
2875. Bemidji, City of, Minnesota
2876. Benton, County of, Minnesota
2877. Big Lake, City of, Minnesota
2878. Blaine, City of, Minnesota
2879. Bloomington, City of, Minnesota
2880. Blue Earth, County of, Minnesota
2881. Brainerd, City of, Minnesota
2882. Brooklyn Center, City of, Minnesota
2883. Brooklyn Park, City of, Minnesota
2884. Brown, County of, Minnesota
2885. Buffalo, City of, Minnesota
2886. Burnsville, City of, Minnesota
2887. Carlton, County of, Minnesota
2888. Carver, County of, Minnesota
2889. Cass, County of, Minnesota
2890. Champlin, City of, Minnesota
2891. Chanhassen, City of, Minnesota
2892. Chaska, City of, Minnesota
2893. Chippewa, County of, Minnesota
2894. Chisago, County of, Minnesota
2895. Clay, County of, Minnesota
2896. Cloquet, City of, Minnesota
2897. Columbia Heights, City of, Minnesota
2898. Coon Rapids, City of, Minnesota
2899. Cottage Grove, City of, Minnesota
2900. Cottonwood, County of, Minnesota
2901. Crow Wing, County of, Minnesota
2902. Crystal, City of, Minnesota
2903. Dakota, County of, Minnesota
2904. Dodge, County of, Minnesota
2905. Douglas, County of, Minnesota
2906. Duluth, City of, Minnesota
2907. Eagan, City of, Minnesota
2908. East Bethel, City of, Minnesota
2909. Eden Prairie, City of, Minnesota
2910. Edina, City of, Minnesota
2911. Elk River, City of, Minnesota
2912. Fairmont, City of, Minnesota
2913. Faribault, City of, Minnesota
2914. Faribault, County of, Minnesota
2915. Farmington, City of, Minnesota
2916. Fergus Falls, City of, Minnesota
2917. Fillmore, County of, Minnesota
2918. Forest Lake, City of, Minnesota
2919. Freeborn, County of, Minnesota
2920. Fridley, City of, Minnesota
2921. Golden Valley, City of, Minnesota
2922. Goodhue, County of, Minnesota
2923. Grand Rapids, City of, Minnesota
2924. Ham Lake, City of, Minnesota
2925. Hastings, City of, Minnesota
2926. Hennepin, County of, Minnesota
2927. Hibbing, City of, Minnesota
2928. Hopkins, City of, Minnesota
2929. Houston, County of, Minnesota
2930. Hubbard, County of, Minnesota
2931. Hugo, City of, Minnesota
2932. Hutchinson, City of, Minnesota
2933. Inver Grove Heights, City of, Minnesota
2934. Isanti, County of, Minnesota
2935. Itasca, County of, Minnesota
2936. Kanabec, County of, Minnesota
2937. Kandiyohi, County of, Minnesota
2938. Koochiching, County of, Minnesota
2939. Lake, County of, Minnesota
2940. Lakeville, City of, Minnesota

2941. Le Sueur, County of, Minnesota
2942. Lino Lakes, City of, Minnesota
2943. Little Canada, City of, Minnesota
2944. Lyon, County of, Minnesota
2945. Mankato, City of, Minnesota
2946. Maple Grove, City of, Minnesota
2947. Maplewood, City of, Minnesota
2948. Marshall, City of, Minnesota
2949. Martin, County of, Minnesota
2950. McLeod, County of, Minnesota
2951. Meeker, County of, Minnesota
2952. Mendota Heights, City of, Minnesota
2953. Mille Lacs, County of, Minnesota
2954. Minneapolis, City of, Minnesota
2955. Minnetonka, City of, Minnesota
2956. Monticello, City of, Minnesota
2957. Moorhead, City of, Minnesota
2958. Morrison, County of, Minnesota
2959. Mounds View, City of, Minnesota
2960. Mower, County of, Minnesota
2961. New Brighton, City of, Minnesota
2962. New Hope, City of, Minnesota
2963. New Ulm, City of, Minnesota
2964. Nicollet, County of, Minnesota
2965. Nobles, County of, Minnesota
2966. North Branch, City of, Minnesota
2967. North Mankato, City of, Minnesota
2968. North St. Paul, City of, Minnesota
2969. Northfield, City of, Minnesota
2970. Oakdale, City of, Minnesota
2971. Olmsted, County of, Minnesota
2972. Otsego, City of, Minnesota
2973. Otter Tail, County of, Minnesota
2974. Owatonna, City of, Minnesota
2975. Pennington, County of, Minnesota
2976. Pine, County of, Minnesota
2977. Plymouth, City of, Minnesota
2978. Polk, County of, Minnesota
2979. Pope, County of, Minnesota
2980. Prior Lake, City of, Minnesota
2981. Ramsey, City of, Minnesota
2982. Ramsey, County of, Minnesota
2983. Red Wing, City of, Minnesota
2984. Redwood, County of, Minnesota
2985. Renville, County of, Minnesota
2986. Rice, County of, Minnesota
2987. Richfield, City of, Minnesota
2988. Robbinsdale, City of, Minnesota
2989. Rochester, City of, Minnesota
2990. Rogers, City of, Minnesota
2991. Roseau, County of, Minnesota
2992. Rosemount, City of, Minnesota
2993. Roseville, City of, Minnesota
2994. Sartell, City of, Minnesota
2995. Sauk Rapids, City of, Minnesota
2996. Savage, City of, Minnesota
2997. Scott, County of, Minnesota
2998. Shakopee, City of, Minnesota
2999. Sherburne, County of, Minnesota
3000. Shoreview, City of, Minnesota
3001. Sibley, County of, Minnesota
3002. South St. Paul, City of, Minnesota
3003. St. Cloud, City of, Minnesota
3004. St. Louis, County of, Minnesota
3005. St. Louis Park, City of, Minnesota
3006. St. Michael, City of, Minnesota
3007. St. Paul, City of, Minnesota
3008. St. Peter, City of, Minnesota
3009. Stearns, County of, Minnesota
3010. Steele, County of, Minnesota
3011. Stillwater, City of, Minnesota
3012. Todd, County of, Minnesota
3013. Vadnais Heights, City of, Minnesota
3014. Victoria, City of, Minnesota
3015. Wabasha, County of, Minnesota
3016. Waconia, City of, Minnesota
3017. Wadena, County of, Minnesota
3018. Waseca, County of, Minnesota
3019. Washington, County of, Minnesota
3020. Watonwan, County of, Minnesota
3021. West St. Paul, City of, Minnesota
3022. White Bear Lake, City of, Minnesota
3023. White Bear, Township of, Minnesota
3024. Willmar, City of, Minnesota
3025. Winona, City of, Minnesota
3026. Winona, County of, Minnesota
3027. Woodbury, City of, Minnesota
3028. Worthington, City of, Minnesota
3029. Wright, County of, Minnesota
3030. Adams, County of, Mississippi
3031. Alcorn, County of, Mississippi
3032. Amite, County of, Mississippi

3033. Attala, County of, Mississippi
3034. Bay St. Louis, City of, Mississippi
3035. Biloxi, City of, Mississippi
3036. Bolivar, County of, Mississippi
3037. Brandon, City of, Mississippi
3038. Brookhaven, City of, Mississippi
3039. Byram, City of, Mississippi
3040. Calhoun, County of, Mississippi
3041. Canton, City of, Mississippi
3042. Chickasaw, County of, Mississippi
3043. Clarke, County of, Mississippi
3044. Clarksdale, City of, Mississippi
3045. Clay, County of, Mississippi
3046. Cleveland, City of, Mississippi
3047. Clinton, City of, Mississippi
3048. Coahoma, County of, Mississippi
3049. Columbus, City of, Mississippi
3050. Copiah, County of, Mississippi
3051. Corinth, City of, Mississippi
3052. Covington, County of, Mississippi
3053. DeSoto, County of, Mississippi
3054. D'Iberville, City of, Mississippi
3055. Forrest, County of, Mississippi
3056. Gautier, City of, Mississippi
3057. George, County of, Mississippi
3058. Greene, County of, Mississippi
3059. Greenville, City of, Mississippi
3060. Greenwood, City of, Mississippi
3061. Grenada, City of, Mississippi
3062. Grenada, County of, Mississippi
3063. Gulfport, City of, Mississippi
3064. Hancock, County of, Mississippi
3065. Harrison, County of, Mississippi
3066. Hattiesburg, City of, Mississippi
3067. Hernando, City of, Mississippi
3068. Hinds, County of, Mississippi
3069. Holmes, County of, Mississippi
3070. Horn Lake, City of, Mississippi
3071. Itawamba, County of, Mississippi
3072. Jackson, City of, Mississippi
3073. Jackson, County of, Mississippi
3074. Jasper, County of, Mississippi
3075. Jefferson Davis, County of, Mississippi
3076. Jones, County of, Mississippi
3077. Lafayette, County of, Mississippi
3078. Lamar, County of, Mississippi
3079. Lauderdale, County of, Mississippi
3080. Laurel, City of, Mississippi
3081. Lawrence, County of, Mississippi
3082. Leake, County of, Mississippi
3083. Lee, County of, Mississippi
3084. Leflore, County of, Mississippi
3085. Lincoln, County of, Mississippi
3086. Long Beach, City of, Mississippi
3087. Lowndes, County of, Mississippi
3088. Madison, City of, Mississippi
3089. Madison, County of, Mississippi
3090. Marion, County of, Mississippi
3091. Marshall, County of, Mississippi
3092. McComb, City of, Mississippi
3093. Meridian, City of, Mississippi
3094. Monroe, County of, Mississippi
3095. Moss Point, City of, Mississippi
3096. Natchez, City of, Mississippi
3097. Neshoba, County of, Mississippi
3098. Newton, County of, Mississippi
3099. Noxubee, County of, Mississippi
3100. Ocean Springs, City of, Mississippi
3101. Oktibbeha, County of, Mississippi
3102. Olive Branch, City of, Mississippi
3103. Oxford, City of, Mississippi
3104. Panola, County of, Mississippi
3105. Pascagoula, City of, Mississippi
3106. Pearl, City of, Mississippi
3107. Pearl River, County of, Mississippi
3108. Perry, County of, Mississippi
3109. Petal, City of, Mississippi
3110. Picayune, City of, Mississippi
3111. Pike, County of, Mississippi
3112. Pontotoc, County of, Mississippi
3113. Prentiss, County of, Mississippi
3114. Rankin, County of, Mississippi
3115. Ridgeland, City of, Mississippi
3116. Scott, County of, Mississippi
3117. Simpson, County of, Mississippi
3118. Smith, County of, Mississippi
3119. Southaven, City of, Mississippi
3120. Starkville, City of, Mississippi
3121. Stone, County of, Mississippi
3122. Sunflower, County of, Mississippi
3123. Tallahatchie, County of, Mississippi

3124. Tate, County of, Mississippi
3125. Tippah, County of, Mississippi
3126. Tishomingo, County of, Mississippi
3127. Tupelo, City of, Mississippi
3128. Union, County of, Mississippi
3129. Vicksburg, City of, Mississippi
3130. Walthall, County of, Mississippi
3131. Warren, County of, Mississippi
3132. Washington, County of, Mississippi
3133. Wayne, County of, Mississippi
3134. West Point, City of, Mississippi
3135. Winston, County of, Mississippi
3136. Yalobusha, County of, Mississippi
3137. Yazoo City, City of, Mississippi
3138. Yazoo, County of, Mississippi
3139. Adair, County of, Missouri
3140. Andrew, County of, Missouri
3141. Arnold, City of, Missouri
3142. Audrain, County of, Missouri
3143. Ballwin, City of, Missouri
3144. Barry, County of, Missouri
3145. Barton, County of, Missouri
3146. Bates, County of, Missouri
3147. Bellefontaine Neighbors, City of, Missouri
3148. Belton, City of, Missouri
3149. Benton, County of, Missouri
3150. Blue Springs, City of, Missouri
3151. Bolivar, City of, Missouri
3152. Bollinger, County of, Missouri
3153. Boone, County of, Missouri
3154. Branson, City of, Missouri
3155. Bridgeton, City of, Missouri
3156. Buchanan, County of, Missouri
3157. Butler, County of, Missouri
3158. Callaway, County of, Missouri
3159. Camden, County of, Missouri
3160. Cape Girardeau, City of, Missouri
3161. Cape Girardeau, County of, Missouri
3162. Carthage, City of, Missouri
3163. Cass, County of, Missouri
3164. Cedar, County of, Missouri
3165. Chesterfield, City of, Missouri
3166. Christian, County of, Missouri
3167. Clay, County of, Missouri
3168. Clayton, City of, Missouri
3169. Clinton, County of, Missouri
3170. Cole, County of, Missouri
3171. Columbia, City of, Missouri
3172. Cooper, County of, Missouri
3173. Crawford, County of, Missouri
3174. Crestwood, City of, Missouri
3175. Creve Coeur, City of, Missouri
3176. Dallas, County of, Missouri
3177. Dardenne Prairie, City of, Missouri
3178. DeKalb, County of, Missouri
3179. Dent, County of, Missouri
3180. Douglas, County of, Missouri
3181. Dunklin, County of, Missouri
3182. Eureka, City of, Missouri
3183. Excelsior Springs, City of, Missouri
3184. Farmington, City of, Missouri
3185. Ferguson, City of, Missouri
3186. Festus, City of, Missouri
3187. Florissant, City of, Missouri
3188. Franklin, County of, Missouri
3189. Fulton, City of, Missouri
3190. Gasconade, County of, Missouri
3191. Gladstone, City of, Missouri
3192. Grain Valley, City of, Missouri
3193. Grandview, City of, Missouri
3194. Greene, County of, Missouri
3195. Hannibal, City of, Missouri
3196. Harrisonville, City of, Missouri
3197. Hazelwood, City of, Missouri
3198. Henry, County of, Missouri
3199. Howard, County of, Missouri
3200. Howell, County of, Missouri
3201. Independence, City of, Missouri
3202. Independence, Township of, Missouri
3203. Iron, County of, Missouri
3204. Jackson, City of, Missouri
3205. Jackson, County of, Missouri
3206. Jasper, County of, Missouri
3207. Jefferson City, City of, Missouri
3208. Jefferson, County of, Missouri
3209. Jennings, City of, Missouri
3210. Johnson, County of, Missouri
3211. Joplin, City of, Missouri
3212. Kansas City, City of, Missouri
3213. Kearney, City of, Missouri

3214. Kennett, City of, Missouri
3215. Kirksville, City of, Missouri
3216. Kirkwood, City of, Missouri
3217. Laclede, County of, Missouri
3218. Lafayette, County of, Missouri
3219. Lake St. Louis, City of, Missouri
3220. Lawrence, County of, Missouri
3221. Lebanon, City of, Missouri
3222. Lee's Summit, City of, Missouri
3223. Liberty, City of, Missouri
3224. Liberty, Township of, Missouri
3225. Lincoln, County of, Missouri
3226. Linn, County of, Missouri
3227. Livingston, County of, Missouri
3228. Macon, County of, Missouri
3229. Madison, County of, Missouri
3230. Manchester, City of, Missouri
3231. Marion, County of, Missouri
3232. Marshall, City of, Missouri
3233. Maryland Heights, City of, Missouri
3234. Maryville, City of, Missouri
3235. McDonald, County of, Missouri
3236. Mexico, City of, Missouri
3237. Miller, County of, Missouri
3238. Mississippi, County of, Missouri
3239. Moberly, City of, Missouri
3240. Moniteau, County of, Missouri
3241. Montgomery, County of, Missouri
3242. Morgan, County of, Missouri
3243. Neosho, City of, Missouri
3244. New Madrid, County of, Missouri
3245. Newton, County of, Missouri
3246. Nixa, City of, Missouri
3247. Nodaway, County of, Missouri
3248. O'Fallon, City of, Missouri
3249. Oregon, County of, Missouri
3250. Osage, County of, Missouri
3251. Overland, City of, Missouri
3252. Ozark, City of, Missouri
3253. Pemiscot, County of, Missouri
3254. Perry, County of, Missouri
3255. Pettis, County of, Missouri
3256. Phelps, County of, Missouri
3257. Pike, County of, Missouri
3258. Platte, County of, Missouri
3259. Polk, County of, Missouri
3260. Polk, Township of, Missouri
3261. Poplar Bluff, City of, Missouri
3262. Pulaski, County of, Missouri
3263. Ralls, County of, Missouri
3264. Randolph, County of, Missouri
3265. Ray, County of, Missouri
3266. Raymore, City of, Missouri
3267. Raytown, City of, Missouri
3268. Republic, City of, Missouri
3269. Ripley, County of, Missouri
3270. Rolla, City of, Missouri
3271. Saline, County of, Missouri
3272. Scott, County of, Missouri
3273. Sedalia, City of, Missouri
3274. Sikeston, City of, Missouri
3275. Smithville, City of, Missouri
3276. Springfield, City of, Missouri
3277. St. Ann, City of, Missouri
3278. St. Charles, City of, Missouri
3279. St. Charles, County of, Missouri
3280. St. Francois, County of, Missouri
3281. St. Joseph, City of, Missouri
3282. St. Louis, City of, Missouri
3283. St. Louis, County of, Missouri
3284. St. Peters, City of, Missouri
3285. Ste. Genevieve, County of, Missouri
3286. Stoddard, County of, Missouri
3287. Stone, County of, Missouri
3288. Taney, County of, Missouri
3289. Texas, County of, Missouri
3290. Town and Country, City of, Missouri
3291. Troy, City of, Missouri
3292. Union, City of, Missouri
3293. University City, City of, Missouri
3294. Vernon, County of, Missouri
3295. Warren, County of, Missouri
3296. Warrensburg, City of, Missouri
3297. Washington, City of, Missouri
3298. Washington, County of, Missouri
3299. Wayne, County of, Missouri
3300. Webb City, City of, Missouri
3301. Webster, County of, Missouri
3302. Webster Groves, City of, Missouri
3303. Wentzville, City of, Missouri
3304. West Plains, City of, Missouri
3305. Wildwood, City of, Missouri

3306. Wright, County of, Missouri
3307. Big Horn, County of, Montana
3308. Billings, City of, Montana
3309. Bozeman, City of, Montana
3310. Butte-Silver Bow, Montana
3311. Carbon, County of, Montana
3312. Cascade, County of, Montana
3313. Custer, County of, Montana
3314. Fergus, County of, Montana
3315. Flathead, County of, Montana
3316. Gallatin, County of, Montana
3317. Glacier, County of, Montana
3318. Great Falls, City of, Montana
3319. Helena, City of, Montana
3320. Hill, County of, Montana
3321. Jefferson, County of, Montana
3322. Kalispell, City of, Montana
3323. Lake, County of, Montana
3324. Lewis and Clark, County of, Montana
3325. Lincoln, County of, Montana
3326. Missoula, City of, Montana
3327. Missoula, County of, Montana
3328. Park, County of, Montana
3329. Ravalli, County of, Montana
3330. Richland, County of, Montana
3331. Roosevelt, County of, Montana
3332. Sanders, County of, Montana
3333. Yellowstone, County of, Montana
3334. Adams, County of, Nebraska
3335. Beatrice, City of, Nebraska
3336. Bellevue, City of, Nebraska
3337. Box Butte, County of, Nebraska
3338. Buffalo, County of, Nebraska
3339. Cass, County of, Nebraska
3340. Colfax, County of, Nebraska
3341. Columbus, City of, Nebraska
3342. Custer, County of, Nebraska
3343. Dakota, County of, Nebraska
3344. Dawson, County of, Nebraska
3345. Dodge, County of, Nebraska
3346. Douglas, County of, Nebraska
3347. Fremont, City of, Nebraska
3348. Gage, County of, Nebraska
3349. Grand Island, City of, Nebraska
3350. Hall, County of, Nebraska
3351. Hastings, City of, Nebraska
3352. Holt, County of, Nebraska
3353. Kearney, City of, Nebraska
3354. La Vista, City of, Nebraska
3355. Lancaster, County of, Nebraska
3356. Lexington, City of, Nebraska
3357. Lincoln, City of, Nebraska
3358. Lincoln, County of, Nebraska
3359. Madison, County of, Nebraska
3360. Norfolk, City of, Nebraska
3361. North Platte, City of, Nebraska
3362. Omaha, City of, Nebraska
3363. Otoe, County of, Nebraska
3364. Papillion, City of, Nebraska
3365. Platte, County of, Nebraska
3366. Red Willow, County of, Nebraska
3367. Saline, County of, Nebraska
3368. Sarpy, County of, Nebraska
3369. Saunders, County of, Nebraska
3370. Scotts Bluff, County of, Nebraska
3371. Scottsbluff, City of, Nebraska
3372. Seward, County of, Nebraska
3373. South Sioux City, City of, Nebraska
3374. Washington, County of, Nebraska
3375. York, County of, Nebraska
3376. Boulder City, City of, Nevada
3377. Carson, City of, Nevada
3378. Churchill, County of, Nevada
3379. Clark, County of, Nevada
3380. Douglas, County of, Nevada
3381. Elko, City of, Nevada
3382. Elko, County of, Nevada
3383. Fernley, City of, Nevada
3384. Henderson, City of, Nevada
3385. Humboldt, County of, Nevada
3386. Las Vegas, City of, Nevada
3387. Lyon, County of, Nevada
3388. Mesquite, City of, Nevada
3389. North Las Vegas, City of, Nevada
3390. Nye, County of, Nevada
3391. Reno, City of, Nevada
3392. Sparks, City of, Nevada
3393. Washoe, County of, Nevada
3394. Amherst, Town of, New Hampshire
3395. Bedford, Town of, New Hampshire
3396. Belknap, County of, New Hampshire

3397. Berlin, City of, New Hampshire
3398. Carroll, County of, New Hampshire
3399. Cheshire, County of, New Hampshire
3400. Claremont, City of, New Hampshire
3401. Concord, City of, New Hampshire
3402. Conway, Town of, New Hampshire
3403. Coos, County of, New Hampshire
3404. Derry, Town of, New Hampshire
3405. Dover, City of, New Hampshire
3406. Durham, Town of, New Hampshire
3407. Exeter, Town of, New Hampshire
3408. Goffstown, Town of, New Hampshire
3409. Grafton, County of, New Hampshire
3410. Hampton, Town of, New Hampshire
3411. Hanover, Town of, New Hampshire
3412. Hillsborough, County of, New Hampshire
3413. Hooksett, Town of, New Hampshire
3414. Hudson, Town of, New Hampshire
3415. Keene, City of, New Hampshire
3416. Laconia, City of, New Hampshire
3417. Lebanon, City of, New Hampshire
3418. Londonderry, Town of, New Hampshire
3419. Manchester, City of, New Hampshire
3420. Merrimack, County of, New Hampshire
3421. Merrimack, Town of, New Hampshire
3422. Milford, Town of, New Hampshire
3423. Nashua, City of, New Hampshire
3424. Pelham, Town of, New Hampshire
3425. Portsmouth, City of, New Hampshire
3426. Raymond, Town of, New Hampshire
3427. Rochester, City of, New Hampshire
3428. Rockingham, County of, New Hampshire
3429. Salem, Town of, New Hampshire
3430. Somersworth, City of, New Hampshire
3431. Strafford, County of, New Hampshire
3432. Sullivan, County of, New Hampshire
3433. Windham, Town of, New Hampshire
3434. Aberdeen, Township of, New Jersey
3435. Asbury Park, City of, New Jersey
3436. Atlantic City, City of, New Jersey
3437. Atlantic, County of, New Jersey
3438. Barnegat, Township of, New Jersey
3439. Bayonne, City of, New Jersey
3440. Beachwood, Borough of, New Jersey
3441. Belleville, Township of, New Jersey
3442. Bellmawr, Borough of, New Jersey
3443. Bergen, County of, New Jersey
3444. Bergenfield, Borough of, New Jersey
3445. Berkeley Heights, Township of, New Jersey
3446. Berkeley, Township of, New Jersey
3447. Bernards, Township of, New Jersey
3448. Bloomfield, Township of, New Jersey
3449. Bordentown, Township of, New Jersey
3450. Bound Brook, Borough of, New Jersey
3451. Branchburg, Township of, New Jersey
3452. Brick, Township of, New Jersey
3453. Bridgeton, City of, New Jersey
3454. Bridgewater, Township of, New Jersey
3455. Burlington, County of, New Jersey
3456. Burlington, Township of, New Jersey
3457. Camden, City of, New Jersey
3458. Camden, County of, New Jersey
3459. Cape May, County of, New Jersey
3460. Carteret, Borough of, New Jersey
3461. Cedar Grove, Township of, New Jersey
3462. Chatham, Township of, New Jersey
3463. Cherry Hill, Township of, New Jersey
3464. Cinnaminson, Township of, New Jersey
3465. City of Orange, Township of, New Jersey
3466. Clark, Township of, New Jersey
3467. Cliffside Park, Borough of, New Jersey

3468. Clifton, City of, New Jersey
3469. Clinton, Township of, New Jersey
3470. Collingswood, Borough of, New Jersey
3471. Cranford, Township of, New Jersey
3472. Cumberland, County of, New Jersey
3473. Delran, Township of, New Jersey
3474. Denville, Township of, New Jersey
3475. Deptford, Township of, New Jersey
3476. Dover, Town of, New Jersey
3477. Dumont, Borough of, New Jersey
3478. East Brunswick, Township of, New Jersey
3479. East Greenwich, Township of, New Jersey
3480. East Hanover, Township of, New Jersey
3481. East Orange, City of, New Jersey
3482. East Windsor, Township of, New Jersey
3483. Eatontown, Borough of, New Jersey
3484. Edgewater, Borough of, New Jersey
3485. Edison, Township of, New Jersey
3486. Egg Harbor, Township of, New Jersey
3487. Elizabeth, City of, New Jersey
3488. Elmwood Park, Borough of, New Jersey
3489. Englewood, City of, New Jersey
3490. Essex, County of, New Jersey
3491. Evesham, Township of, New Jersey
3492. Ewing, Township of, New Jersey
3493. Fair Lawn, Borough of, New Jersey
3494. Fairview, Borough of, New Jersey
3495. Florence, Township of, New Jersey
3496. Florham Park, Borough of, New Jersey
3497. Fort Lee, Borough of, New Jersey
3498. Franklin Lakes, Borough of, New Jersey
3499. Franklin, Township of, New Jersey
3500. Freehold, Borough of, New Jersey
3501. Freehold, Township of, New Jersey
3502. Galloway, Township of, New Jersey
3503. Garfield, City of, New Jersey
3504. Glassboro, Borough of, New Jersey
3505. Glen Rock, Borough of, New Jersey
3506. Gloucester City, City of, New Jersey
3507. Gloucester, County of, New Jersey
3508. Gloucester, Township of, New Jersey
3509. Guttenberg, Town of, New Jersey
3510. Hackensack, City of, New Jersey
3511. Haddon, Township of, New Jersey
3512. Haddonfield, Borough of, New Jersey
3513. Hamilton, Township of, New Jersey
3514. Hammonton, Town of, New Jersey
3515. Hanover, Township of, New Jersey
3516. Harrison, Town of, New Jersey
3517. Harrison, Township of, New Jersey
3518. Hasbrouck Heights, Borough of, New Jersey
3519. Hawthorne, Borough of, New Jersey
3520. Hazlet, Township of, New Jersey
3521. Highland Park, Borough of, New Jersey
3522. Hillsborough, Township of, New Jersey
3523. Hillsdale, Borough of, New Jersey
3524. Hillside, Township of, New Jersey
3525. Hoboken, City of, New Jersey
3526. Holmdel, Township of, New Jersey
3527. Hopatcong, Borough of, New Jersey
3528. Hopewell, Township of, New Jersey
3529. Howell, Township of, New Jersey
3530. Hudson, County of, New Jersey
3531. Hunterdon, County of, New Jersey
3532. Irvington, Township of, New Jersey
3533. Jackson, Township of, New Jersey
3534. Jefferson, Township of, New Jersey
3535. Jersey City, City of, New Jersey
3536. Kearny, Town of, New Jersey
3537. Lacey, Township of, New Jersey
3538. Lakewood, Township of, New Jersey
3539. Lawrence, Township of, New Jersey
3540. Lincoln Park, Borough of, New Jersey
3541. Linden, City of, New Jersey
3542. Lindenwold, Borough of, New Jersey

3543. Little Egg Harbor, Township of, New Jersey
3544. Little Falls, Township of, New Jersey
3545. Little Ferry, Borough of, New Jersey
3546. Livingston, Township of, New Jersey
3547. Lodi, Borough of, New Jersey
3548. Long Branch, City of, New Jersey
3549. Lower, Township of, New Jersey
3550. Lumberton, Township of, New Jersey
3551. Lyndhurst, Township of, New Jersey
3552. Madison, Borough of, New Jersey
3553. Mahwah, Township of, New Jersey
3554. Manalapan, Township of, New Jersey
3555. Manchester, Township of, New Jersey
3556. Mantua, Township of, New Jersey
3557. Manville, Borough of, New Jersey
3558. Maple Shade, Township of, New Jersey
3559. Maplewood, Township of, New Jersey
3560. Marlboro, Township of, New Jersey
3561. Medford, Township of, New Jersey
3562. Mercer, County of, New Jersey
3563. Metuchen, Borough of, New Jersey
3564. Middle, Township of, New Jersey
3565. Middlesex, Borough of, New Jersey
3566. Middlesex, County of, New Jersey
3567. Middletown, Township of, New Jersey
3568. Millburn, Township of, New Jersey
3569. Millstone, Township of, New Jersey
3570. Millville, City of, New Jersey
3571. Monmouth, County of, New Jersey
3572. Monroe, Township of, New Jersey
3573. Montclair, Township of, New Jersey
3574. Montgomery, Township of, New Jersey
3575. Montville, Township of, New Jersey
3576. Moorestown, Township of, New Jersey
3577. Morris, County of, New Jersey
3578. Morris, Township of, New Jersey
3579. Morristown, Town of, New Jersey
3580. Mount Laurel, Township of, New Jersey
3581. Mount Olive, Township of, New Jersey
3582. Neptune, Township of, New Jersey
3583. New Brunswick, City of, New Jersey
3584. New Milford, Borough of, New Jersey
3585. New Providence, Borough of, New Jersey
3586. Newark, City of, New Jersey
3587. North Arlington, Borough of, New Jersey
3588. North Bergen, Township of, New Jersey
3589. North Brunswick, Township of, New Jersey
3590. North Plainfield, Borough of, New Jersey
3591. Nutley, Township of, New Jersey
3592. Oakland, Borough of, New Jersey
3593. Ocean City, City of, New Jersey
3594. Ocean, County of, New Jersey
3595. Ocean, Township of, New Jersey
3596. Old Bridge, Township of, New Jersey
3597. Palisades Park, Borough of, New Jersey
3598. Paramus, Borough of, New Jersey
3599. Parsippany-Troy Hills, Township of, New Jersey
3600. Passaic, City of, New Jersey
3601. Passaic, County of, New Jersey
3602. Paterson, City of, New Jersey
3603. Pemberton, Township of, New Jersey
3604. Pennsauken, Township of, New Jersey
3605. Pennsville, Township of, New Jersey
3606. Pequannock, Township of, New Jersey
3607. Perth Amboy, City of, New Jersey
3608. Phillipsburg, Town of, New Jersey
3609. Pine Hill, Borough of, New Jersey

3610. Piscataway, Township of, New Jersey
3611. Plainfield, City of, New Jersey
3612. Plainsboro, Township of, New Jersey
3613. Pleasantville, City of, New Jersey
3614. Point Pleasant, Borough of, New Jersey
3615. Pompton Lakes, Borough of, New Jersey
3616. Princeton, New Jersey
3617. Rahway, City of, New Jersey
3618. Ramsey, Borough of, New Jersey
3619. Randolph, Township of, New Jersey
3620. Raritan, Township of, New Jersey
3621. Readington, Township of, New Jersey
3622. Red Bank, Borough of, New Jersey
3623. Ridgefield, Borough of, New Jersey
3624. Ridgefield Park, Village of, New Jersey
3625. Ridgewood, Village of, New Jersey
3626. Ringwood, Borough of, New Jersey
3627. River Edge, Borough of, New Jersey
3628. Robbinsville, Township of, New Jersey
3629. Rockaway, Township of, New Jersey
3630. Roselle, Borough of, New Jersey
3631. Roselle Park, Borough of, New Jersey
3632. Roxbury, Township of, New Jersey
3633. Rutherford, Borough of, New Jersey
3634. Saddle Brook, Township of, New Jersey
3635. Salem, County of, New Jersey
3636. Sayreville, Borough of, New Jersey
3637. Scotch Plains, Township of, New Jersey
3638. Secaucus, Town of, New Jersey
3639. Somers Point, City of, New Jersey
3640. Somerset, County of, New Jersey
3641. Somerville, Borough of, New Jersey
3642. South Brunswick, Township of, New Jersey
3643. South Orange Village, Township of, New Jersey
3644. South Plainfield, Borough of, New Jersey
3645. South River, Borough of, New Jersey
3646. Southampton, Township of, New Jersey
3647. Sparta, Township of, New Jersey
3648. Springfield, Township of, New Jersey
3649. Stafford, Township of, New Jersey
3650. Summit, City of, New Jersey
3651. Sussex, County of, New Jersey
3652. Teaneck, Township of, New Jersey
3653. Tenafly, Borough of, New Jersey
3654. Tinton Falls, Borough of, New Jersey
3655. Toms River, Township of, New Jersey
3656. Totowa, Borough of, New Jersey
3657. Trenton, City of, New Jersey
3658. Union City, City of, New Jersey
3659. Union, County of, New Jersey
3660. Union, Township of, New Jersey
3661. Upper, Township of, New Jersey
3662. Vernon, Township of, New Jersey
3663. Verona, Township of, New Jersey
3664. Vineland, City of, New Jersey
3665. Voorhees, Township of, New Jersey
3666. Waldwick, Borough of, New Jersey
3667. Wall, Township of, New Jersey
3668. Wallington, Borough of, New Jersey
3669. Wanaque, Borough of, New Jersey
3670. Wantage, Township of, New Jersey
3671. Warren, County of, New Jersey
3672. Warren, Township of, New Jersey
3673. Washington, Township of, New Jersey
3674. Waterford, Township of, New Jersey
3675. Wayne, Township of, New Jersey
3676. Weehawken, Township of, New Jersey
3677. West Caldwell, Township of, New Jersey
3678. West Deptford, Township of, New Jersey

3679. West Milford, Township of, New Jersey
3680. West New York, Town of, New Jersey
3681. West Orange, Township of, New Jersey
3682. West Windsor, Township of, New Jersey
3683. Westfield, Town of, New Jersey
3684. Westwood, Borough of, New Jersey
3685. Willingboro, Township of, New Jersey
3686. Winslow, Township of, New Jersey
3687. Woodbridge, Township of, New Jersey
3688. Woodland Park, Borough of, New Jersey
3689. Woolwich, Township of, New Jersey
3690. Wyckoff, Township of, New Jersey
3691. Albany, City of, New York
3692. Albany, County of, New York
3693. Allegany, County of, New York
3694. Amherst, Town of, New York
3695. Amsterdam, City of, New York
3696. Arcadia, Town of, New York
3697. Auburn, City of, New York
3698. Aurora, Town of, New York
3699. Babylon, Town of, New York
3700. Babylon, Village of, New York
3701. Ballston, Town of, New York
3702. Batavia, City of, New York
3703. Bath, Town of, New York
3704. Beacon, City of, New York
3705. Bedford, Town of, New York
3706. Beekman, Town of, New York
3707. Bethlehem, Town of, New York
3708. Binghamton, City of, New York
3709. Blooming Grove, Town of, New York
3710. Brighton, Town of, New York
3711. Bronx, County of, New York
3712. Brookhaven, Town of, New York
3713. Broome, County of, New York
3714. Brunswick, Town of, New York
3715. Buffalo, City of, New York
3716. Camillus, Town of, New York
3717. Canandaigua, City of, New York
3718. Canandaigua, Town of, New York
3719. Canton, Town of, New York
3720. Carmel, Town of, New York
3721. Catskill, Town of, New York
3722. Cattaraugus, County of, New York
3723. Cayuga, County of, New York
3724. Chautauqua, County of, New York
3725. Cheektowaga, Town of, New York
3726. Chemung, County of, New York
3727. Chenango, County of, New York
3728. Chenango, Town of, New York
3729. Chester, Town of, New York
3730. Chili, Town of, New York
3731. Cicero, Town of, New York
3732. Clarence, Town of, New York
3733. Clarkstown, Town of, New York
3734. Clay, Town of, New York
3735. Clifton Park, Town of, New York
3736. Clinton, County of, New York
3737. Cohoes, City of, New York
3738. Colonie, Town of, New York
3739. Columbia, County of, New York
3740. Corning, City of, New York
3741. Cornwall, Town of, New York
3742. Cortland, City of, New York
3743. Cortland, County of, New York
3744. Cortlandt, Town of, New York
3745. De Witt, Town of, New York
3746. Delaware, County of, New York
3747. Depew, Village of, New York
3748. Dobbs Ferry, Village of, New York
3749. Dryden, Town of, New York
3750. Dunkirk, City of, New York
3751. Dutchess, County of, New York
3752. East Fishkill, Town of, New York
3753. East Greenbush, Town of, New York
3754. East Hampton, Town of, New York
3755. Eastchester, Town of, New York
3756. Elma, Town of, New York
3757. Elmira, City of, New York
3758. Endicott, Village of, New York
3759. Erie, County of, New York
3760. Essex, County of, New York
3761. Evans, Town of, New York
3762. Fallsburg, Town of, New York

3763. Farmington, Town of, New York
3764. Fishkill, Town of, New York
3765. Floral Park, Village of, New York
3766. Franklin, County of, New York
3767. Fredonia, Village of, New York
3768. Freeport, Village of, New York
3769. Fulton, City of, New York
3770. Fulton, County of, New York
3771. Garden City, Village of, New York
3772. Gates, Town of, New York
3773. Geddes, Town of, New York
3774. Genesee, County of, New York
3775. Geneseo, Town of, New York
3776. Geneva, City of, New York
3777. German Flatts, Town of, New York
3778. Glen Cove, City of, New York
3779. Glens Falls, City of, New York
3780. Glenville, Town of, New York
3781. Gloversville, City of, New York
3782. Goshen, Town of, New York
3783. Grand Island, Town of, New York
3784. Great Neck, Village of, New York
3785. Greece, Town of, New York
3786. Greenburgh, Town of, New York
3787. Greene, County of, New York
3788. Guilderland, Town of, New York
3789. Halfmoon, Town of, New York
3790. Hamburg, Town of, New York
3791. Harrison, Town of, New York
3792. Harrison, Village of, New York
3793. Haverstraw, Town of, New York
3794. Haverstraw, Village of, New York
3795. Hempstead, Town of, New York
3796. Hempstead, Village of, New York
3797. Henrietta, Town of, New York
3798. Herkimer, County of, New York
3799. Highlands, Town of, New York
3800. Horseheads, Town of, New York
3801. Huntington, Town of, New York
3802. Hyde Park, Town of, New York
3803. Irondequoit, Town of, New York
3804. Islip, Town of, New York
3805. Ithaca, City of, New York
3806. Ithaca, Town of, New York
3807. Jamestown, City of, New York
3808. Jefferson, County of, New York
3809. Johnson City, Village of, New York
3810. Kenmore, Village of, New York
3811. Kent, Town of, New York
3812. Kings, County of, New York
3813. Kingsbury, Town of, New York
3814. Kingston, City of, New York
3815. Kirkland, Town of, New York
3816. Kiryas Joel, Village of, New York
3817. La Grange, Town of, New York
3818. Lackawanna, City of, New York
3819. Lake Grove, Village of, New York
3820. Lancaster, Town of, New York
3821. Lancaster, Village of, New York
3822. Lansing, Town of, New York
3823. Le Ray, Town of, New York
3824. Lewis, County of, New York
3825. Lewisboro, Town of, New York
3826. Lewiston, Town of, New York
3827. Lindenhurst, Village of, New York
3828. Livingston, County of, New York
3829. Lloyd, Town of, New York
3830. Lockport, City of, New York
3831. Lockport, Town of, New York
3832. Long Beach, City of, New York
3833. Lynbrook, Village of, New York
3834. Lysander, Town of, New York
3835. Madison, County of, New York
3836. Malone, Town of, New York
3837. Malta, Town of, New York
3838. Mamakating, Town of, New York
3839. Mamaroneck, Town of, New York
3840. Mamaroneck, Village of, New York
3841. Manlius, Town of, New York
3842. Massapequa Park, Village of, New York
3843. Massena, Town of, New York
3844. Massena, Village of, New York
3845. Middletown, City of, New York
3846. Milton, Town of, New York
3847. Mineola, Village of, New York
3848. Monroe, County of, New York
3849. Monroe, Town of, New York
3850. Montgomery, County of, New York
3851. Montgomery, Town of, New York
3852. Moreau, Town of, New York

3853. Mount Kisco, Village of/ Town of, New York
3854. Mount Pleasant, Town of, New York
3855. Mount Vernon, City of, New York
3856. Nassau, County of, New York
3857. New Castle, Town of, New York
3858. New Hartford, Town of, New York
3859. New Paltz, Town of, New York
3860. New Rochelle, City of, New York
3861. New Windsor, Town of, New York
3862. New York, City of, New York
3863. New York, County of, New York
3864. Newburgh, City of, New York
3865. Newburgh, Town of, New York
3866. Niagara, County of, New York
3867. Niagara Falls, City of, New York
3868. Niskayuna, Town of, New York
3869. North Castle, Town of, New York
3870. North Greenbush, Town of, New York
3871. North Hempstead, Town of, New York
3872. North Tonawanda, City of, New York
3873. Ogden, Town of, New York
3874. Ogdensburg, City of, New York
3875. Olean, City of, New York
3876. Oneida, City of, New York
3877. Oneida, County of, New York
3878. Oneonta, City of, New York
3879. Onondaga, County of, New York
3880. Onondaga, Town of, New York
3881. Ontario, County of, New York
3882. Ontario, Town of, New York
3883. Orange, County of, New York
3884. Orangetown, Town of, New York
3885. Orchard Park, Town of, New York
3886. Orleans, County of, New York
3887. Ossining, Town of, New York
3888. Ossining, Village of, New York
3889. Oswego, City of, New York
3890. Oswego, County of, New York
3891. Otsego, County of, New York
3892. Owego, Town of, New York
3893. Oyster Bay, Town of, New York
3894. Palm Tree, Town of, New York
3895. Parma, Town of, New York
3896. Patchogue, Village of, New York
3897. Patterson, Town of, New York
3898. Peekskill, City of, New York
3899. Pelham, Town of, New York
3900. Penfield, Town of, New York
3901. Perinton, Town of, New York
3902. Pittsford, Town of, New York
3903. Plattekill, Town of, New York
3904. Plattsburgh, City of, New York
3905. Plattsburgh, Town of, New York
3906. Pomfret, Town of, New York
3907. Port Chester, Village of, New York
3908. Potsdam, Town of, New York
3909. Poughkeepsie, City of, New York
3910. Poughkeepsie, Town of, New York
3911. Putnam, County of, New York
3912. Putnam Valley, Town of, New York
3913. Queens, County of, New York
3914. Queensbury, Town of, New York
3915. Ramapo, Town of, New York
3916. Red Hook, Town of, New York
3917. Rensselaer, County of, New York
3918. Richmond, County of, New York
3919. Riverhead, Town of, New York
3920. Rochester, City of, New York
3921. Rockland, County of, New York
3922. Rockville Centre, Village of, New York
3923. Rome, City of, New York
3924. Rotterdam, Town of, New York
3925. Rye, City of, New York
3926. Rye, Town of, New York
3927. Salina, Town of, New York
3928. Saratoga, County of, New York
3929. Saratoga Springs, City of, New York
3930. Saugerties, Town of, New York
3931. Scarsdale, Village of/ Scarsdale, Town of, New York
3932. Schenectady, City of, New York
3933. Schenectady, County of, New York
3934. Schodack, Town of, New York
3935. Schoharie, County of, New York
3936. Schuyler, County of, New York
3937. Seneca, County of, New York
3938. Shawangunk, Town of, New York

3939. Sleepy Hollow, Village of, New York
3940. Smithtown, Town of, New York
3941. Somers, Town of, New York
3942. Southampton, Town of, New York
3943. Southeast, Town of, New York
3944. Southold, Town of, New York
3945. Spring Valley, Village of, New York
3946. St. Lawrence, County of, New York
3947. Steuben, County of, New York
3948. Stony Point, Town of, New York
3949. Suffern, Village of, New York
3950. Suffolk, County of, New York
3951. Sullivan, County of, New York
3952. Sullivan, Town of, New York
3953. Sweden, Town of, New York
3954. Syracuse, City of, New York
3955. Tarrytown, Village of, New York
3956. Thompson, Town of, New York
3957. Tioga, County of, New York
3958. Tompkins, County of, New York
3959. Tonawanda, City of, New York
3960. Tonawanda, Town of, New York
3961. Troy, City of, New York
3962. Ulster, County of, New York
3963. Ulster, Town of, New York
3964. Union, Town of, New York
3965. Utica, City of, New York
3966. Valley Stream, Village of, New York
3967. Van Buren, Town of, New York
3968. Vestal, Town of, New York
3969. Victor, Town of, New York
3970. Wallkill, Town of, New York
3971. Wappinger, Town of, New York
3972. Warren, County of, New York
3973. Warwick, Town of, New York
3974. Washington, County of, New York
3975. Watertown, City of, New York
3976. Wawarsing, Town of, New York
3977. Wayne, County of, New York
3978. Webster, Town of, New York
3979. West Haverstraw, Village of, New York
3980. West Seneca, Town of, New York
3981. Westbury, Village of, New York
3982. Westchester, County of, New York
3983. Wheatfield, Town of, New York
3984. White Plains, City of, New York
3985. Whitestown, Town of, New York
3986. Wilton, Town of, New York
3987. Woodbury, Town of, New York
3988. Woodbury, Village of, New York
3989. Wyoming, County of, New York
3990. Yates, County of, New York
3991. Yonkers, City of, New York
3992. Yorktown, Town of, New York
3993. Alamance, County of, North Carolina
3994. Albemarle, City of, North Carolina
3995. Alexander, County of, North Carolina
3996. Alleghany, County of, North Carolina
3997. Anson, County of, North Carolina
3998. Apex, Town of, North Carolina
3999. Archdale, City of, North Carolina
4000. Ashe, County of, North Carolina
4001. Asheboro, City of, North Carolina
4002. Asheville, City of, North Carolina
4003. Avery, County of, North Carolina
4004. Beaufort, County of, North Carolina
4005. Belmont, City of, North Carolina
4006. Bertie, County of, North Carolina
4007. Bladen, County of, North Carolina
4008. Boone, Town of, North Carolina
4009. Brunswick, County of, North Carolina
4010. Buncombe, County of, North Carolina
4011. Burke, County of, North Carolina
4012. Burlington, City of, North Carolina
4013. Cabarrus, County of, North Carolina
4014. Caldwell, County of, North Carolina
4015. Camden, County of, North Carolina
4016. Carrboro, Town of, North Carolina
4017. Carteret, County of, North Carolina
4018. Cary, Town of, North Carolina
4019. Caswell, County of, North Carolina
4020. Catawba, County of, North Carolina
4021. Chapel Hill, Town of, North Carolina
4022. Charlotte, City of, North Carolina

4023. Chatham, County of, North Carolina
4024. Cherokee, County of, North Carolina
4025. Chowan, County of, North Carolina
4026. Clay, County of, North Carolina
4027. Clayton, Town of, North Carolina
4028. Clemmons, Village of, North Carolina
4029. Cleveland, County of, North Carolina
4030. Columbus, County of, North Carolina
4031. Concord, City of, North Carolina
4032. Cornelius, Town of, North Carolina
4033. Craven, County of, North Carolina
4034. Cumberland, County of, North Carolina
4035. Currituck, County of, North Carolina
4036. Dare, County of, North Carolina
4037. Davidson, County of, North Carolina
4038. Davidson, Town of, North Carolina
4039. Davie, County of, North Carolina
4040. Duplin, County of, North Carolina
4041. Durham, City of, North Carolina
4042. Durham, County of, North Carolina
4043. Eden, City of, North Carolina
4044. Edgecombe, County of, North Carolina
4045. Elizabeth City, City of, North Carolina
4046. Elon, Town of, North Carolina
4047. Fayetteville, City of, North Carolina
4048. Forsyth, County of, North Carolina
4049. Franklin, County of, North Carolina
4050. Fuquay-Varina, Town of, North Carolina
4051. Garner, Town of, North Carolina
4052. Gaston, County of, North Carolina
4053. Gastonia, City of, North Carolina
4054. Gates, County of, North Carolina
4055. Goldsboro, City of, North Carolina
4056. Graham, City of, North Carolina
4057. Granville, County of, North Carolina
4058. Greene, County of, North Carolina
4059. Greensboro, City of, North Carolina
4060. Greenville, City of, North Carolina
4061. Guilford, County of, North Carolina
4062. Halifax, County of, North Carolina
4063. Harnett, County of, North Carolina
4064. Harrisburg, Town of, North Carolina
4065. Havelock, City of, North Carolina
4066. Haywood, County of, North Carolina
4067. Henderson, City of, North Carolina
4068. Henderson, County of, North Carolina
4069. Hendersonville, City of, North Carolina
4070. Hertford, County of, North Carolina
4071. Hickory, City of, North Carolina
4072. High Point, City of, North Carolina
4073. Hoke, County of, North Carolina
4074. Holly Springs, Town of, North Carolina
4075. Hope Mills, Town of, North Carolina
4076. Huntersville, Town of, North Carolina
4077. Indian Trail, Town of, North Carolina
4078. Iredell, County of, North Carolina
4079. Jackson, County of, North Carolina
4080. Jacksonville, City of, North Carolina
4081. Johnston, County of, North Carolina
4082. Kannapolis, City of, North Carolina
4083. Kernersville, Town of, North Carolina
4084. Kings Mountain, City of, North Carolina
4085. Kinston, City of, North Carolina
4086. Knightdale, Town of, North Carolina
4087. Laurinburg, City of, North Carolina
4088. Lee, County of, North Carolina
4089. Leland, Town of, North Carolina
4090. Lenoir, City of, North Carolina
4091. Lenoir, County of, North Carolina
4092. Lewisville, Town of, North Carolina
4093. Lexington, City of, North Carolina
4094. Lincoln, County of, North Carolina
4095. Lincolnton, City of, North Carolina
4096. Lumberton, City of, North Carolina
4097. Macon, County of, North Carolina
4098. Madison, County of, North Carolina
4099. Martin, County of, North Carolina
4100. Matthews, Town of, North Carolina

4101. McDowell, County of, North Carolina
4102. Mebane, City of, North Carolina
4103. Mecklenburg, County of, North Carolina
4104. Mint Hill, Town of, North Carolina
4105. Mitchell, County of, North Carolina
4106. Monroe, City of, North Carolina
4107. Montgomery, County of, North Carolina
4108. Moore, County of, North Carolina
4109. Mooresville, Town of, North Carolina
4110. Morganton, City of, North Carolina
4111. Morrisville, Town of, North Carolina
4112. Mount Airy, City of, North Carolina
4113. Mount Holly, City of, North Carolina
4114. Nash, County of, North Carolina
4115. New Bern, City of, North Carolina
4116. New Hanover, County of, North Carolina
4117. Newton, City of, North Carolina
4118. Northampton, County of, North Carolina
4119. Onslow, County of, North Carolina
4120. Orange, County of, North Carolina
4121. Pamlico, County of, North Carolina
4122. Pasquotank, County of, North Carolina
4123. Pender, County of, North Carolina
4124. Perquimans, County of, North Carolina
4125. Person, County of, North Carolina
4126. Pinehurst, Village of, North Carolina
4127. Pitt, County of, North Carolina
4128. Polk, County of, North Carolina
4129. Raleigh, City of, North Carolina
4130. Randolph, County of, North Carolina
4131. Reidsville, City of, North Carolina
4132. Richmond, County of, North Carolina
4133. Roanoke Rapids, City of, North Carolina
4134. Robeson, County of, North Carolina
4135. Rockingham, County of, North Carolina
4136. Rocky Mount, City of, North Carolina
4137. Rowan, County of, North Carolina
4138. Rutherford, County of, North Carolina
4139. Salisbury, City of, North Carolina
4140. Sampson, County of, North Carolina
4141. Sanford, City of, North Carolina
4142. Scotland, County of, North Carolina
4143. Shelby, City of, North Carolina
4144. Smithfield, Town of, North Carolina
4145. Southern Pines, Town of, North Carolina
4146. Spring Lake, Town of, North Carolina
4147. Stallings, Town of, North Carolina
4148. Stanly, County of, North Carolina
4149. Statesville, City of, North Carolina
4150. Stokes, County of, North Carolina
4151. Summerfield, Town of, North Carolina
4152. Surry, County of, North Carolina
4153. Swain, County of, North Carolina
4154. Tarboro, Town of, North Carolina
4155. Thomasville, City of, North Carolina
4156. Transylvania, County of, North Carolina
4157. Union, County of, North Carolina
4158. Vance, County of, North Carolina
4159. Wake, County of, North Carolina
4160. Wake Forest, Town of, North Carolina
4161. Warren, County of, North Carolina
4162. Washington, County of, North Carolina
4163. Watauga, County of, North Carolina
4164. Waxhaw, Town of, North Carolina
4165. Wayne, County of, North Carolina
4166. Waynesville, Town of, North Carolina
4167. Weddington, Town of, North Carolina
4168. Wilkes, County of, North Carolina
4169. Wilmington, City of, North Carolina

4170. Wilson, City of, North Carolina
4171. Wilson, County of, North Carolina
4172. Winston-Salem, City of, North Carolina
4173. Yadkin, County of, North Carolina
4174. Yancey, County of, North Carolina
4175. Barnes, County of, North Dakota
4176. Bismarck, City of, North Dakota
4177. Burleigh, County of, North Dakota
4178. Cass, County of, North Dakota
4179. Dickinson, City of, North Dakota
4180. Fargo, City of, North Dakota
4181. Grand Forks, City of, North Dakota
4182. Grand Forks, County of, North Dakota
4183. Jamestown, City of, North Dakota
4184. Mandan, City of, North Dakota
4185. McKenzie, County of, North Dakota
4186. Minot, City of, North Dakota
4187. Morton, County of, North Dakota
4188. Mountrail, County of, North Dakota
4189. Ramsey, County of, North Dakota
4190. Richland, County of, North Dakota
4191. Rolette, County of, North Dakota
4192. Stark, County of, North Dakota
4193. Stutsman, County of, North Dakota
4194. Walsh, County of, North Dakota
4195. Ward, County of, North Dakota
4196. West Fargo, City of, North Dakota
4197. Williams, County of, North Dakota
4198. Williston, City of, North Dakota
4199. Adams, County of, Ohio
4200. Akron, City of, Ohio
4201. Allen, County of, Ohio
4202. Alliance, City of, Ohio
4203. American, Township of, Ohio
4204. Amherst, City of, Ohio
4205. Anderson, Township of, Ohio
4206. Ashland, City of, Ohio
4207. Ashland, County of, Ohio
4208. Ashtabula, City of, Ohio
4209. Ashtabula, County of, Ohio
4210. Ashtabula, Township of, Ohio
4211. Athens, City of, Ohio
4212. Athens, County of, Ohio
4213. Athens, Township of, Ohio
4214. Auglaize, County of, Ohio
4215. Aurora, City of, Ohio
4216. Austintown, Township of, Ohio
4217. Avon, City of, Ohio
4218. Avon Lake, City of, Ohio
4219. Bainbridge, Township of, Ohio
4220. Barberton, City of, Ohio
4221. Batavia, Township of, Ohio
4222. Bath, Township of, Ohio
4223. Bay, Village of, City of, Ohio
4224. Beachwood, City of, Ohio
4225. Beavercreek, City of, Ohio
4226. Beavercreek, Township of, Ohio
4227. Bedford, City of, Ohio
4228. Bedford Heights, City of, Ohio
4229. Bellefontaine, City of, Ohio
4230. Belmont, County of, Ohio
4231. Berea, City of, Ohio
4232. Bethel, Township of, Ohio
4233. Bexley, City of, Ohio
4234. Blue Ash, City of, Ohio
4235. Boardman, Township of, Ohio
4236. Bowling Green, City of, Ohio
4237. Brecksville, City of, Ohio
4238. Brimfield, Township of, Ohio
4239. Broadview Heights, City of, Ohio
4240. Brook Park, City of, Ohio
4241. Brooklyn, City of, Ohio
4242. Brown, County of, Ohio
4243. Brunswick, City of, Ohio
4244. Brunswick Hills, Township of, Ohio
4245. Bucyrus, City of, Ohio
4246. Butler, County of, Ohio
4247. Cambridge, City of, Ohio
4248. Cambridge, Township of, Ohio
4249. Canfield, Township of, Ohio
4250. Canton, City of, Ohio
4251. Canton, Township of, Ohio
4252. Carroll, County of, Ohio
4253. Celina, City of, Ohio
4254. Centerville, City of, Ohio
4255. Champaign, County of, Ohio
4256. Chester, Township of, Ohio
4257. Chillicothe, City of, Ohio
4258. Chippewa, Township of, Ohio
4259. Cincinnati, City of, Ohio

4260. Circleville, City of, Ohio
4261. Clark, County of, Ohio
4262. Clayton, City of, Ohio
4263. Clear Creek, Township of, Ohio
4264. Clermont, County of, Ohio
4265. Cleveland, City of, Ohio
4266. Cleveland Heights, City of, Ohio
4267. Clinton, County of, Ohio
4268. Clinton, Township of, Ohio
4269. Colerain, Township of, Ohio
4270. Columbiana, County of, Ohio
4271. Columbus, City of, Ohio
4272. Concord, Township of, Ohio
4273. Conneaut, City of, Ohio
4274. Copley, Township of, Ohio
4275. Coshocton, City of, Ohio
4276. Coshocton, County of, Ohio
4277. Coventry, Township of, Ohio
4278. Crawford, County of, Ohio
4279. Cuyahoga, County of, Ohio
4280. Cuyahoga Falls, City of, Ohio
4281. Darke, County of, Ohio
4282. Dayton, City of, Ohio
4283. Deerfield, Township of, Ohio
4284. Defiance, City of, Ohio
4285. Defiance, County of, Ohio
4286. Defiance, Township of, Ohio
4287. Delaware, City of, Ohio
4288. Delaware City, Township of, Ohio
4289. Delaware, County of, Ohio
4290. Delhi, Township of, Ohio
4291. Dover, City of, Ohio
4292. Dublin, City of, Ohio
4293. Duchouquet, Township of, Ohio
4294. East Cleveland, City of, Ohio
4295. East Liverpool, City of, Ohio
4296. Eastlake, City of, Ohio
4297. Elyria, City of, Ohio
4298. Englewood, City of, Ohio
4299. Erie, County of, Ohio
4300. Etna, Township of, Ohio
4301. Euclid, City of, Ohio
4302. Fairborn, City of, Ohio
4303. Fairfield, City of, Ohio
4304. Fairfield, County of, Ohio
4305. Fairfield, Township of, Ohio
4306. Fairview Park, City of, Ohio
4307. Falls, Township of, Ohio
4308. Fayette, County of, Ohio
4309. Findlay, City of, Ohio
4310. Forest Park, City of, Ohio
4311. Fostoria, City of, Ohio
4312. Franklin, City of, Ohio
4313. Franklin, County of, Ohio
4314. Franklin, Township of, Ohio
4315. Fremont, City of, Ohio
4316. Fulton, County of, Ohio
4317. Gahanna, City of, Ohio
4318. Gallia, County of, Ohio
4319. Garfield Heights, City of, Ohio
4320. Geauga, County of, Ohio
4321. Geneva, Township of, Ohio
4322. Genoa, Township of, Ohio
4323. Goshen, Township of, Ohio
4324. Granville, Township of, Ohio
4325. Green, City of, Ohio
4326. Green, Township of, Ohio
4327. Greene, County of, Ohio
4328. Greenville, City of, Ohio
4329. Greenville, Township of, Ohio
4330. Grove City, City of, Ohio
4331. Guernsey, County of, Ohio
4332. Hamilton, City of, Ohio
4333. Hamilton, County of, Ohio
4334. Hamilton, Township of, Ohio
4335. Hancock, County of, Ohio
4336. Hardin, County of, Ohio
4337. Harrison, City of, Ohio
4338. Harrison, County of, Ohio
4339. Harrison, Township of, Ohio
4340. Heath, City of, Ohio
4341. Henry, County of, Ohio
4342. Highland, County of, Ohio
4343. Hilliard, City of, Ohio
4344. Hocking, County of, Ohio
4345. Holmes, County of, Ohio
4346. Howland, Township of, Ohio
4347. Hubbard, Township of, Ohio
4348. Huber Heights, City of, Ohio
4349. Hudson, City of, Ohio
4350. Huron, County of, Ohio
4351. Huron, Township of, Ohio

4352. Ironton, City of, Ohio
4353. Jackson, County of, Ohio
4354. Jackson, Township of, Ohio
4355. Jefferson, County of, Ohio
4356. Jefferson, Township of, Ohio
4357. Kent, City of, Ohio
4358. Kettering, City of, Ohio
4359. Knox, County of, Ohio
4360. Lake, County of, Ohio
4361. Lake, Township of, Ohio
4362. Lakewood, City of, Ohio
4363. Lancaster, City of, Ohio
4364. Lancaster City, Township of, Ohio
4365. Lawrence, County of, Ohio
4366. Lawrence, Township of, Ohio
4367. Lebanon, City of, Ohio
4368. Lemon, Township of, Ohio
4369. Liberty, Township of, Ohio
4370. Licking, County of, Ohio
4371. Lima, City of, Ohio
4372. Logan, County of, Ohio
4373. London, City of, Ohio
4374. Lorain, City of, Ohio
4375. Lorain, County of, Ohio
4376. Loveland, City of, Ohio
4377. Lucas, County of, Ohio
4378. Lyndhurst, City of, Ohio
4379. Macedonia, City of, Ohio
4380. Mad River, Township of, Ohio
4381. Madison, County of, Ohio
4382. Madison, Township of, Ohio
4383. Mahoning, County of, Ohio
4384. Mansfield, City of, Ohio
4385. Maple Heights, City of, Ohio
4386. Marietta, City of, Ohio
4387. Marion, City of, Ohio
4388. Marion, County of, Ohio
4389. Marion, Township of, Ohio
4390. Marysville, City of, Ohio
4391. Mason, City of, Ohio
4392. Massillon, City of, Ohio
4393. Maumee, City of, Ohio
4394. Mayfield Heights, City of, Ohio
4395. Medina, City of, Ohio
4396. Medina City, Township of, Ohio
4397. Medina, County of, Ohio
4398. Meigs, County of, Ohio
4399. Mentor, City of, Ohio
4400. Mercer, County of, Ohio
4401. Miami, County of, Ohio
4402. Miami, Township of, Ohio
4403. Miamisburg, City of, Ohio
4404. Middleburg Heights, City of, Ohio
4405. Middletown, City of, Ohio
4406. Mifflin, Township of, Ohio
4407. Monclova, Township of, Ohio
4408. Monroe, City of, Ohio
4409. Monroe, County of, Ohio
4410. Monroe, Township of, Ohio
4411. Montgomery, City of, Ohio
4412. Montgomery, County of, Ohio
4413. Montville, Township of, Ohio
4414. Moorefield, Township of, Ohio
4415. Morgan, County of, Ohio
4416. Morrow, County of, Ohio
4417. Mount Vernon, City of, Ohio
4418. Muskingum, County of, Ohio
4419. New Albany, City of, Ohio
4420. New Franklin, City of, Ohio
4421. New Philadelphia, City of, Ohio
4422. Newark, City of, Ohio
4423. Niles, City of, Ohio
4424. Noble, County of, Ohio
4425. North Canton, City of, Ohio
4426. North Olmsted, City of, Ohio
4427. North Ridgeville, City of, Ohio
4428. North Royalton, City of, Ohio
4429. Norton, City of, Ohio
4430. Norwalk, City of, Ohio
4431. Norwich, Township of, Ohio
4432. Norwood, City of, Ohio
4433. Olmsted, Township of, Ohio
4434. Orange, Township of, Ohio
4435. Oregon, City of, Ohio
4436. Ottawa, County of, Ohio
4437. Oxford, City of, Ohio
4438. Oxford, Township of, Ohio
4439. Painesville, City of, Ohio
4440. Painesville, Township of, Ohio
4441. Paris, Township of, Ohio
4442. Parma, City of, Ohio
4443. Parma Heights, City of, Ohio

4444. Pataskala, City of, Ohio
4445. Paulding, County of, Ohio
4446. Pease, Township of, Ohio
4447. Perkins, Township of, Ohio
4448. Perry, County of, Ohio
4449. Perry, Township of, Ohio
4450. Perrysburg, City of, Ohio
4451. Perrysburg, Township of, Ohio
4452. Pickaway, County of, Ohio
4453. Pickerington, City of, Ohio
4454. Pierce, Township of, Ohio
4455. Pike, County of, Ohio
4456. Piqua, City of, Ohio
4457. Plain, Township of, Ohio
4458. Pleasant, Township of, Ohio
4459. Poland, Township of, Ohio
4460. Portage, County of, Ohio
4461. Portsmouth, City of, Ohio
4462. Powell, City of, Ohio
4463. Prairie, Township of, Ohio
4464. Preble, County of, Ohio
4465. Putnam, County of, Ohio
4466. Ravenna, City of, Ohio
4467. Reading, City of, Ohio
4468. Reynoldsburg, City of, Ohio
4469. Richland, County of, Ohio
4470. Richland, Township of, Ohio
4471. Richmond Heights, City of, Ohio
4472. Riverside, City of, Ohio
4473. Rocky River, City of, Ohio
4474. Ross, County of, Ohio
4475. Sagamore Hills, Township of, Ohio
4476. Salem, City of, Ohio
4477. Sandusky, City of, Ohio
4478. Sandusky, County of, Ohio
4479. Scioto, County of, Ohio
4480. Scioto, Township of, Ohio
4481. Seneca, County of, Ohio
4482. Seven Hills, City of, Ohio
4483. Shaker Heights, City of, Ohio
4484. Sharon, Township of, Ohio
4485. Sharonville, City of, Ohio
4486. Shawnee, Township of, Ohio
4487. Shelby, County of, Ohio
4488. Sidney, City of, Ohio
4489. Solon, City of, Ohio
4490. South Euclid, City of, Ohio
4491. Springboro, City of, Ohio
4492. Springdale, City of, Ohio
4493. Springfield, City of, Ohio
4494. Springfield, Township of, Ohio
4495. St. Marys, Township of, Ohio
4496. Stark, County of, Ohio
4497. Steubenville, City of, Ohio
4498. Stow, City of, Ohio
4499. Streetsboro, City of, Ohio
4500. Strongsville, City of, Ohio
4501. Struthers, City of, Ohio
4502. Summit, County of, Ohio
4503. Sycamore, Township of, Ohio
4504. Sylvania, City of, Ohio
4505. Sylvania, Township of, Ohio
4506. Symmes, Township of, Ohio
4507. Tallmadge, City of, Ohio
4508. Tiffin, City of, Ohio
4509. Tipp City, City of, Ohio
4510. Toledo, City of, Ohio
4511. Trenton, City of, Ohio
4512. Trotwood, City of, Ohio
4513. Troy, City of, Ohio
4514. Trumbull, County of, Ohio
4515. Truro, Township of, Ohio
4516. Turtlecreek, Township of, Ohio
4517. Tuscarawas, County of, Ohio
4518. Twinsburg, City of, Ohio
4519. Union, County of, Ohio
4520. Union, Township of, Ohio
4521. University Heights, City of, Ohio
4522. Upper Arlington, City of, Ohio
4523. Upper, Township of, Ohio
4524. Urbana, City of, Ohio
4525. Urbana, Township of, Ohio
4526. Van Wert, City of, Ohio
4527. Van Wert, County of, Ohio
4528. Vandalia, City of, Ohio
4529. Vermilion, City of, Ohio
4530. Vinton, County of, Ohio
4531. Violet, Township of, Ohio
4532. Wadsworth, City of, Ohio
4533. Warren, City of, Ohio
4534. Warren, County of, Ohio
4535. Warrensville Heights, City of, Ohio

4536. Washington, County of, Ohio
4537. Washington Court House, City of, Ohio
4538. Washington, Township of, Ohio
4539. Wayne, County of, Ohio
4540. Weathersfield, Township of, Ohio
4541. West Carrollton, City of, Ohio
4542. West Chester, Township of, Ohio
4543. Westerville, City of, Ohio
4544. Westlake, City of, Ohio
4545. Whitehall, City of, Ohio
4546. Wickliffe, City of, Ohio
4547. Williams, County of, Ohio
4548. Willoughby, City of, Ohio
4549. Willowick, City of, Ohio
4550. Wilmington, City of, Ohio
4551. Wood, County of, Ohio
4552. Wooster, City of, Ohio
4553. Worthington, City of, Ohio
4554. Wyandot, County of, Ohio
4555. Xenia, City of, Ohio
4556. Youngstown, City of, Ohio
4557. Zanesville, City of, Ohio
4558. Ada, City of, Oklahoma
4559. Adair, County of, Oklahoma
4560. Altus, City of, Oklahoma
4561. Ardmore, City of, Oklahoma
4562. Atoka, County of, Oklahoma
4563. Bartlesville, City of, Oklahoma
4564. Beckham, County of, Oklahoma
4565. Bethany, City of, Oklahoma
4566. Bixby, City of, Oklahoma
4567. Broken Arrow, City of, Oklahoma
4568. Bryan, County of, Oklahoma
4569. Caddo, County of, Oklahoma
4570. Canadian, County of, Oklahoma
4571. Carter, County of, Oklahoma
4572. Cherokee, County of, Oklahoma
4573. Chickasha, City of, Oklahoma
4574. Choctaw, City of, Oklahoma
4575. Choctaw, County of, Oklahoma
4576. Claremore, City of, Oklahoma
4577. Cleveland, County of, Oklahoma
4578. Comanche, County of, Oklahoma
4579. Coweta, City of, Oklahoma
4580. Craig, County of, Oklahoma
4581. Creek, County of, Oklahoma
4582. Custer, County of, Oklahoma
4583. Del City, City of, Oklahoma
4584. Delaware, County of, Oklahoma
4585. Duncan, City of, Oklahoma
4586. Durant, City of, Oklahoma
4587. Edmond, City of, Oklahoma
4588. El Reno, City of, Oklahoma
4589. Elk City, City of, Oklahoma
4590. Enid, City of, Oklahoma
4591. Garfield, County of, Oklahoma
4592. Garvin, County of, Oklahoma
4593. Glenpool, City of, Oklahoma
4594. Grady, County of, Oklahoma
4595. Guthrie, City of, Oklahoma
4596. Guymon, City of, Oklahoma
4597. Haskell, County of, Oklahoma
4598. Hughes, County of, Oklahoma
4599. Jackson, County of, Oklahoma
4600. Jenks, City of, Oklahoma
4601. Johnston, County of, Oklahoma
4602. Kay, County of, Oklahoma
4603. Kingfisher, County of, Oklahoma
4604. Latimer, County of, Oklahoma
4605. Lawton, City of, Oklahoma
4606. Le Flore, County of, Oklahoma
4607. Lincoln, County of, Oklahoma
4608. Logan, County of, Oklahoma
4609. Love, County of, Oklahoma
4610. Marshall, County of, Oklahoma
4611. Mayes, County of, Oklahoma
4612. McAlester, City of, Oklahoma
4613. McClain, County of, Oklahoma
4614. McCurtain, County of, Oklahoma
4615. McIntosh, County of, Oklahoma
4616. Miami, City of, Oklahoma
4617. Midwest City, City of, Oklahoma
4618. Moore, City of, Oklahoma
4619. Murray, County of, Oklahoma
4620. Muskogee, City of, Oklahoma
4621. Muskogee, County of, Oklahoma
4622. Mustang, City of, Oklahoma
4623. Newcastle, City of, Oklahoma
4624. Noble, County of, Oklahoma
4625. Norman, City of, Oklahoma
4626. Nowata, County of, Oklahoma

4627. Okfuskee, County of, Oklahoma
4628. Oklahoma City, City of, Oklahoma
4629. Oklahoma, County of, Oklahoma
4630. Okmulgee, City of, Oklahoma
4631. Okmulgee, County of, Oklahoma
4632. Osage, County of, Oklahoma
4633. Ottawa, County of, Oklahoma
4634. Owasso, City of, Oklahoma
4635. Pawnee, County of, Oklahoma
4636. Payne, County of, Oklahoma
4637. Pittsburg, County of, Oklahoma
4638. Ponca City, City of, Oklahoma
4639. Pontotoc, County of, Oklahoma
4640. Pottawatomie, County of, Oklahoma
4641. Pushmataha, County of, Oklahoma
4642. Rogers, County of, Oklahoma
4643. Sand Springs, City of, Oklahoma
4644. Sapulpa, City of, Oklahoma
4645. Seminole, County of, Oklahoma
4646. Sequoyah, County of, Oklahoma
4647. Shawnee, City of, Oklahoma
4648. Stephens, County of, Oklahoma
4649. Stillwater, City of, Oklahoma
4650. Tahlequah, City of, Oklahoma
4651. Texas, County of, Oklahoma
4652. Tulsa, City of, Oklahoma
4653. Tulsa, County of, Oklahoma
4654. Wagoner, County of, Oklahoma
4655. Warr Acres, City of, Oklahoma
4656. Washington, County of, Oklahoma
4657. Washita, County of, Oklahoma
4658. Weatherford, City of, Oklahoma
4659. Woodward, City of, Oklahoma
4660. Woodward, County of, Oklahoma
4661. Yukon, City of, Oklahoma
4662. Albany, City of, Oregon
4663. Ashland, City of, Oregon
4664. Astoria, City of, Oregon
4665. Baker, County of, Oregon
4666. Beaverton, City of, Oregon
4667. Bend, City of, Oregon
4668. Benton, County of, Oregon
4669. Canby, City of, Oregon
4670. Central Point, City of, Oregon
4671. Clackamas, County of, Oregon
4672. Clatsop, County of, Oregon
4673. Columbia, County of, Oregon
4674. Coos Bay, City of, Oregon
4675. Coos, County of, Oregon
4676. Cornelius, City of, Oregon
4677. Corvallis, City of, Oregon
4678. Cottage Grove, City of, Oregon
4679. Crook, County of, Oregon
4680. Curry, County of, Oregon
4681. Dallas, City of, Oregon
4682. Deschutes, County of, Oregon
4683. Douglas, County of, Oregon
4684. Eugene, City of, Oregon
4685. Forest Grove, City of, Oregon
4686. Gladstone, City of, Oregon
4687. Grants Pass, City of, Oregon
4688. Gresham, City of, Oregon
4689. Happy Valley, City of, Oregon
4690. Hermiston, City of, Oregon
4691. Hillsboro, City of, Oregon
4692. Hood River, County of, Oregon
4693. Independence, City of, Oregon
4694. Jackson, County of, Oregon
4695. Jefferson, County of, Oregon
4696. Josephine, County of, Oregon
4697. Keizer, City of, Oregon
4698. Klamath, County of, Oregon
4699. Klamath Falls, City of, Oregon
4700. La Grande, City of, Oregon
4701. Lake Oswego, City of, Oregon
4702. Lane, County of, Oregon
4703. Lebanon, City of, Oregon
4704. Lincoln, County of, Oregon
4705. Linn, County of, Oregon
4706. Malheur, County of, Oregon
4707. Marion, County of, Oregon
4708. McMinnville, City of, Oregon
4709. Medford, City of, Oregon
4710. Milwaukie, City of, Oregon
4711. Monmouth, City of, Oregon
4712. Morrow, County of, Oregon
4713. Multnomah, County of, Oregon
4714. Newberg, City of, Oregon
4715. Newport, City of, Oregon
4716. Ontario, City of, Oregon
4717. Oregon City, City of, Oregon
4718. Pendleton, City of, Oregon

4719. Polk, County of, Oregon
4720. Portland, City of, Oregon
4721. Prineville, City of, Oregon
4722. Redmond, City of, Oregon
4723. Roseburg, City of, Oregon
4724. Salem, City of, Oregon
4725. Sandy, City of, Oregon
4726. Sherwood, City of, Oregon
4727. Silverton, City of, Oregon
4728. Springfield, City of, Oregon
4729. St. Helens, City of, Oregon
4730. The Dalles, City of, Oregon
4731. Tigard, City of, Oregon
4732. Tillamook, County of, Oregon
4733. Troutdale, City of, Oregon
4734. Tualatin, City of, Oregon
4735. Umatilla, County of, Oregon
4736. Union, County of, Oregon
4737. Wasco, County of, Oregon
4738. Washington, County of, Oregon
4739. West Linn, City of, Oregon
4740. Wilsonville, City of, Oregon
4741. Woodburn, City of, Oregon
4742. Yamhill, County of, Oregon
4743. Abington, Township of, Pennsylvania
4744. Adams, County of, Pennsylvania
4745. Adams, Township of, Pennsylvania
4746. Allegheny, County of, Pennsylvania
4747. Allentown, City of, Pennsylvania
4748. Altoona, City of, Pennsylvania
4749. Amity, Township of, Pennsylvania
4750. Antrim, Township of, Pennsylvania
4751. Armstrong, County of, Pennsylvania
4752. Aston, Township of, Pennsylvania
4753. Baldwin, Borough of, Pennsylvania
4754. Beaver, County of, Pennsylvania
4755. Bedford, County of, Pennsylvania
4756. Bensalem, Township of, Pennsylvania
4757. Berks, County of, Pennsylvania
4758. Bethel Park, Municipality of, Pennsylvania
4759. Bethlehem, City of, Pennsylvania
4760. Bethlehem, Township of, Pennsylvania
4761. Blair, County of, Pennsylvania
4762. Bloomsburg, Town of, Pennsylvania
4763. Bradford, County of, Pennsylvania
4764. Bristol, Township of, Pennsylvania
4765. Buckingham, Township of, Pennsylvania
4766. Bucks, County of, Pennsylvania
4767. Butler, City of, Pennsylvania
4768. Butler, County of, Pennsylvania
4769. Butler, Township of, Pennsylvania
4770. Caln, Township of, Pennsylvania
4771. Cambria, County of, Pennsylvania
4772. Carbon, County of, Pennsylvania
4773. Carlisle, Borough of, Pennsylvania
4774. Cecil, Township of, Pennsylvania
4775. Center, Township of, Pennsylvania
4776. Centre, County of, Pennsylvania
4777. Chambersburg, Borough of, Pennsylvania
4778. Cheltenham, Township of, Pennsylvania
4779. Chester, City of, Pennsylvania
4780. Chester, County of, Pennsylvania
4781. Chestnuthill, Township of, Pennsylvania
4782. Clarion, County of, Pennsylvania
4783. Clearfield, County of, Pennsylvania
4784. Clinton, County of, Pennsylvania
4785. Coal, Township of, Pennsylvania
4786. Coatesville, City of, Pennsylvania
4787. College, Township of, Pennsylvania
4788. Columbia, Borough of, Pennsylvania
4789. Columbia, County of, Pennsylvania
4790. Concord, Township of, Pennsylvania
4791. Coolbaugh, Township of, Pennsylvania
4792. Cranberry, Township of, Pennsylvania
4793. Crawford, County of, Pennsylvania
4794. Cumberland, County of, Pennsylvania
4795. Cumru, Township of, Pennsylvania
4796. Darby, Borough of, Pennsylvania
4797. Dauphin, County of, Pennsylvania
4798. Delaware, County of, Pennsylvania
4799. Derry, Township of, Pennsylvania

4800. Dingman, Township of, Pennsylvania
4801. Douglass, Township of, Pennsylvania
4802. Dover, Township of, Pennsylvania
4803. Doylestown, Township of, Pennsylvania
4804. Dunmore, Borough of, Pennsylvania
4805. East Cocalico, Township of, Pennsylvania
4806. East Goshen, Township of, Pennsylvania
4807. East Hempfield, Township of, Pennsylvania
4808. East Lampeter, Township of, Pennsylvania
4809. East Norriton, Township of, Pennsylvania
4810. East Pennsboro, Township of, Pennsylvania
4811. East Stroudsburg, Borough of, Pennsylvania
4812. East Whiteland, Township of, Pennsylvania
4813. Easton, City of, Pennsylvania
4814. Easttown, Township of, Pennsylvania
4815. Elizabeth, Township of, Pennsylvania
4816. Elizabethtown, Borough of, Pennsylvania
4817. Elk, County of, Pennsylvania
4818. Emmaus, Borough of, Pennsylvania
4819. Ephrata, Borough of, Pennsylvania
4820. Ephrata, Township of, Pennsylvania
4821. Erie, City of, Pennsylvania
4822. Erie, County of, Pennsylvania
4823. Exeter, Township of, Pennsylvania
4824. Fairview, Township of, Pennsylvania
4825. Falls, Township of, Pennsylvania
4826. Fayette, County of, Pennsylvania
4827. Ferguson, Township of, Pennsylvania
4828. Forks, Township of, Pennsylvania
4829. Franconia, Township of, Pennsylvania
4830. Franklin, County of, Pennsylvania
4831. Franklin Park, Borough of, Pennsylvania
4832. Fulton, County of, Pennsylvania
4833. Greene, County of, Pennsylvania
4834. Greene, Township of, Pennsylvania
4835. Greensburg, City of, Pennsylvania
4836. Guilford, Township of, Pennsylvania
4837. Hamilton, Township of, Pennsylvania
4838. Hampden, Township of, Pennsylvania
4839. Hampton, Township of, Pennsylvania
4840. Hanover, Borough of, Pennsylvania
4841. Hanover, Township of, Pennsylvania
4842. Harborcreek, Township of, Pennsylvania
4843. Harrisburg, City of, Pennsylvania
4844. Harrison, Township of, Pennsylvania
4845. Hatfield, Township of, Pennsylvania
4846. Haverford, Township of, Pennsylvania
4847. Hazleton, City of, Pennsylvania
4848. Hempfield, Township of, Pennsylvania
4849. Hermitage, City of, Pennsylvania
4850. Hilltown, Township of, Pennsylvania
4851. Hopewell, Township of, Pennsylvania
4852. Horsham, Township of, Pennsylvania
4853. Huntingdon, County of, Pennsylvania
4854. Indiana, Borough of, Pennsylvania
4855. Indiana, County of, Pennsylvania
4856. Jefferson, County of, Pennsylvania
4857. Jefferson Hills, Borough of, Pennsylvania
4858. Johnstown, City of, Pennsylvania
4859. Juniata, County of, Pennsylvania
4860. Kingston, Borough of, Pennsylvania
4861. Lackawanna, County of, Pennsylvania
4862. Lancaster, City of, Pennsylvania
4863. Lancaster, County of, Pennsylvania

4864. Lancaster, Township of, Pennsylvania
4865. Lansdale, Borough of, Pennsylvania
4866. Lansdowne, Borough of, Pennsylvania
4867. Lawrence, County of, Pennsylvania
4868. Lebanon, City of, Pennsylvania
4869. Lebanon, County of, Pennsylvania
4870. Lehigh, County of, Pennsylvania
4871. Lehigh, Township of, Pennsylvania
4872. Lehman, Township of, Pennsylvania
4873. Limerick, Township of, Pennsylvania
4874. Logan, Township of, Pennsylvania
4875. Lower Allen, Township of, Pennsylvania
4876. Lower Burrell, City of, Pennsylvania
4877. Lower Gwynedd, Township of, Pennsylvania
4878. Lower Macungie, Township of, Pennsylvania
4879. Lower Makefield, Township of, Pennsylvania
4880. Lower Merion, Township of, Pennsylvania
4881. Lower Moreland, Township of, Pennsylvania
4882. Lower Paxton, Township of, Pennsylvania
4883. Lower Pottsgrove, Township of, Pennsylvania
4884. Lower Providence, Township of, Pennsylvania
4885. Lower Salford, Township of, Pennsylvania
4886. Lower Saucon, Township of, Pennsylvania
4887. Lower Southampton, Township of, Pennsylvania
4888. Loyalsock, Township of, Pennsylvania
4889. Luzerne, County of, Pennsylvania
4890. Lycoming, County of, Pennsylvania
4891. Manchester, Township of, Pennsylvania
4892. Manheim, Township of, Pennsylvania
4893. Manor, Township of, Pennsylvania
4894. Marple, Township of, Pennsylvania
4895. McCandless, Township of, Pennsylvania
4896. McKean, County of, Pennsylvania
4897. McKeesport, City of, Pennsylvania
4898. Meadville, City of, Pennsylvania
4899. Mercer, County of, Pennsylvania
4900. Middle Smithfield, Township of, Pennsylvania
4901. Middletown, Township of, Pennsylvania
4902. Mifflin, County of, Pennsylvania
4903. Milford, Township of, Pennsylvania
4904. Millcreek, Township of, Pennsylvania
4905. Monroe, County of, Pennsylvania
4906. Monroeville, Municipality of, Pennsylvania
4907. Montgomery, County of, Pennsylvania
4908. Montgomery, Township of, Pennsylvania
4909. Montour, County of, Pennsylvania
4910. Moon, Township of, Pennsylvania
4911. Mount Joy, Township of, Pennsylvania
4912. Mount Lebanon, Township of, Pennsylvania
4913. Mount Pleasant, Township of, Pennsylvania
4914. Muhlenberg, Township of, Pennsylvania
4915. Munhall, Borough of, Pennsylvania
4916. Murrysville, Municipality of, Pennsylvania
4917. Nanticoke, City of, Pennsylvania
4918. Nether Providence, Township of, Pennsylvania
4919. New Britain, Township of, Pennsylvania
4920. New Castle, City of, Pennsylvania
4921. New Garden, Township of, Pennsylvania

4922. New Hanover, Township of, Pennsylvania
4923. New Kensington, City of, Pennsylvania
4924. Newberry, Township of, Pennsylvania
4925. Newtown, Township of, Pennsylvania
4926. Norristown, Borough of, Pennsylvania
4927. North Fayette, Township of, Pennsylvania
4928. North Huntingdon, Township of, Pennsylvania
4929. North Lebanon, Township of, Pennsylvania
4930. North Middleton, Township of, Pennsylvania
4931. North Strabane, Township of, Pennsylvania
4932. North Union, Township of, Pennsylvania
4933. North Whitehall, Township of, Pennsylvania
4934. Northampton, County of, Pennsylvania
4935. Northampton, Township of, Pennsylvania
4936. Northumberland, County of, Pennsylvania
4937. Palmer, Township of, Pennsylvania
4938. Patton, Township of, Pennsylvania
4939. Penn Hills, Township of, Pennsylvania
4940. Penn, Township of, Pennsylvania
4941. Perry, County of, Pennsylvania
4942. Peters, Township of, Pennsylvania
4943. Philadelphia, City of/ County of, Pennsylvania
4944. Phoenixville, Borough of, Pennsylvania
4945. Pike, County of, Pennsylvania
4946. Pine, Township of, Pennsylvania
4947. Pittsburgh, City of, Pennsylvania
4948. Plum, Borough of, Pennsylvania
4949. Plumstead, Township of, Pennsylvania
4950. Plymouth, Township of, Pennsylvania
4951. Pocono, Township of, Pennsylvania
4952. Potter, County of, Pennsylvania
4953. Pottstown, Borough of, Pennsylvania
4954. Pottsville, City of, Pennsylvania
4955. Radnor, Township of, Pennsylvania
4956. Rapho, Township of, Pennsylvania
4957. Reading, City of, Pennsylvania
4958. Richland, Township of, Pennsylvania
4959. Ridley, Township of, Pennsylvania
4960. Robinson, Township of, Pennsylvania
4961. Ross, Township of, Pennsylvania
4962. Rostraver, Township of, Pennsylvania
4963. Salisbury, Township of, Pennsylvania
4964. Sandy, Township of, Pennsylvania
4965. Schuylkill, County of, Pennsylvania
4966. Scott, Township of, Pennsylvania
4967. Scranton, City of, Pennsylvania
4968. Shaler, Township of, Pennsylvania
4969. Sharon, City of, Pennsylvania
4970. Silver Spring, Township of, Pennsylvania
4971. Skippack, Township of, Pennsylvania
4972. Snyder, County of, Pennsylvania
4973. Somerset, County of, Pennsylvania
4974. Somerset, Township of, Pennsylvania
4975. South Fayette, Township of, Pennsylvania
4976. South Lebanon, Township of, Pennsylvania
4977. South Middleton, Township of, Pennsylvania
4978. South Park, Township of, Pennsylvania
4979. South Union, Township of, Pennsylvania

4980. South Whitehall, Township of, Pennsylvania
4981. Spring Garden, Township of, Pennsylvania
4982. Spring, Township of, Pennsylvania
4983. Springettsbury, Township of, Pennsylvania
4984. Springfield, Township of, Pennsylvania
4985. St. Marys, City of, Pennsylvania
4986. State College, Borough of, Pennsylvania
4987. Stroud, Township of, Pennsylvania
4988. Susquehanna, County of, Pennsylvania
4989. Susquehanna, Township of, Pennsylvania
4990. Swatara, Township of, Pennsylvania
4991. Tioga, County of, Pennsylvania
4992. Towamencin, Township of, Pennsylvania
4993. Tredyffrin, Township of, Pennsylvania
4994. Union, County of, Pennsylvania
4995. Unity, Township of, Pennsylvania
4996. Upper Allen, Township of, Pennsylvania
4997. Upper Chichester, Township of, Pennsylvania
4998. Upper Darby, Township of, Pennsylvania
4999. Upper Dublin, Township of, Pennsylvania
5000. Upper Gwynedd, Township of, Pennsylvania
5001. Upper Macungie, Township of, Pennsylvania
5002. Upper Merion, Township of, Pennsylvania
5003. Upper Moreland, Township of, Pennsylvania
5004. Upper Providence, Township of, Pennsylvania
5005. Upper Saucon, Township of, Pennsylvania
5006. Upper Southampton, Township of, Pennsylvania
5007. Upper St. Clair, Township of, Pennsylvania
5008. Upper Uwchlan, Township of, Pennsylvania
5009. Uwchlan, Township of, Pennsylvania
5010. Venango, County of, Pennsylvania
5011. Warminster, Township of, Pennsylvania
5012. Warren, County of, Pennsylvania
5013. Warrington, Township of, Pennsylvania
5014. Warwick, Township of, Pennsylvania
5015. Washington, City of, Pennsylvania
5016. Washington, County of, Pennsylvania
5017. Washington, Township of, Pennsylvania
5018. Wayne, County of, Pennsylvania
5019. Waynesboro, Borough of, Pennsylvania
5020. West Bradford, Township of, Pennsylvania
5021. West Chester, Borough of, Pennsylvania
5022. West Deer, Township of, Pennsylvania
5023. West Goshen, Township of, Pennsylvania
5024. West Hanover, Township of, Pennsylvania
5025. West Hempfield, Township of, Pennsylvania
5026. West Lampeter, Township of, Pennsylvania
5027. West Manchester, Township of, Pennsylvania
5028. West Mifflin, Borough of, Pennsylvania
5029. West Norriton, Township of, Pennsylvania
5030. West Whiteland, Township of, Pennsylvania

5031. Westmoreland, County of, Pennsylvania
5032. Westtown, Township of, Pennsylvania
5033. White, Township of, Pennsylvania
5034. Whitehall, Borough of, Pennsylvania
5035. Whitehall, Township of, Pennsylvania
5036. Whitemarsh, Township of, Pennsylvania
5037. Whitpain, Township of, Pennsylvania
5038. Wilkes-Barre, City of, Pennsylvania
5039. Wilkinsburg, Borough of, Pennsylvania
5040. Williamsport, City of, Pennsylvania
5041. Willistown, Township of, Pennsylvania
5042. Windsor, Township of, Pennsylvania
5043. Worcester, Township of, Pennsylvania
5044. Wyoming, County of, Pennsylvania
5045. Wyomissing, Borough of, Pennsylvania
5046. Yeadon, Borough of, Pennsylvania
5047. York, City of, Pennsylvania
5048. York, County of, Pennsylvania
5049. York, Township of, Pennsylvania
5050. Adjuntas, Municipality of, Puerto Rico
5051. Aguada, Municipality of, Puerto Rico
5052. Aguadilla, Municipality of, Puerto Rico
5053. Aguas Buenas, Municipality of, Puerto Rico
5054. Aibonito, Municipality of, Puerto Rico
5055. Añasco, Municipality of, Puerto Rico
5056. Arecibo, Municipality of, Puerto Rico
5057. Arroyo, Municipality of, Puerto Rico
5058. Barceloneta, Municipality of, Puerto Rico
5059. Barranquitas, Municipality of, Puerto Rico
5060. Bayamón, Municipality of, Puerto Rico
5061. Cabo Rojo, Municipality of, Puerto Rico
5062. Caguas, Municipality of, Puerto Rico
5063. Camuy, Municipality of, Puerto Rico
5064. Canóvanas, Municipality of, Puerto Rico
5065. Carolina, Municipality of, Puerto Rico
5066. Cataño, Municipality of, Puerto Rico
5067. Cayey, Municipality of, Puerto Rico
5068. Ceiba, Municipality of, Puerto Rico
5069. Ciales, Municipality of, Puerto Rico
5070. Cidra, Municipality of, Puerto Rico
5071. Coamo, Municipality of, Puerto Rico
5072. Comerío, Municipality of, Puerto Rico
5073. Corozal, Municipality of, Puerto Rico
5074. Dorado, Municipality of, Puerto Rico
5075. Fajardo, Municipality of, Puerto Rico
5076. Florida, Municipality of, Puerto Rico
5077. Guánica, Municipality of, Puerto Rico
5078. Guayama, Municipality of, Puerto Rico
5079. Guayanilla, Municipality of, Puerto Rico
5080. Guaynabo, Municipality of, Puerto Rico
5081. Gurabo, Municipality of, Puerto Rico
5082. Hatillo, Municipality of, Puerto Rico
5083. Hormigueros, Municipality of, Puerto Rico
5084. Humacao, Municipality of, Puerto Rico
5085. Isabela, Municipality of, Puerto Rico
5086. Jayuya, Municipality of, Puerto Rico
5087. Juana Díaz, Municipality of, Puerto Rico
5088. Juncos, Municipality of, Puerto Rico
5089. Lajas, Municipality of, Puerto Rico
5090. Lares, Municipality of, Puerto Rico

5091. Las Piedras, Municipality of, Puerto Rico
5092. Loíza, Municipality of, Puerto Rico
5093. Luquillo, Municipality of, Puerto Rico
5094. Manatí, Municipality of, Puerto Rico
5095. Maunabo, Municipality of, Puerto Rico
5096. Mayagüez, Municipality of, Puerto Rico
5097. Moca, Municipality of, Puerto Rico
5098. Morovis, Municipality of, Puerto Rico
5099. Naguabo, Municipality of, Puerto Rico
5100. Naranjito, Municipality of, Puerto Rico
5101. Orocovis, Municipality of, Puerto Rico
5102. Patillas, Municipality of, Puerto Rico
5103. Peñuelas, Municipality of, Puerto Rico
5104. Ponce, Municipality of, Puerto Rico
5105. Quebradillas, Municipality of, Puerto Rico
5106. Rincón, Municipality of, Puerto Rico
5107. Río Grande, Municipality of, Puerto Rico
5108. Sabana Grande, Municipality of, Puerto Rico
5109. Salinas, Municipality of, Puerto Rico
5110. San Germán, Municipality of, Puerto Rico
5111. San Juan, Municipality of, Puerto Rico
5112. San Lorenzo, Municipality of, Puerto Rico
5113. San Sebastián, Municipality of, Puerto Rico
5114. Santa Isabel, Municipality of, Puerto Rico
5115. Toa Alta, Municipality of, Puerto Rico
5116. Toa Baja, Municipality of, Puerto Rico
5117. Trujillo Alto, Municipality of, Puerto Rico
5118. Utuado, Municipality of, Puerto Rico
5119. Vega Alta, Municipality of, Puerto Rico
5120. Vega Baja, Municipality of, Puerto Rico
5121. Villalba, Municipality of, Puerto Rico
5122. Yabucoa, Municipality of, Puerto Rico
5123. Yauco, Municipality of, Puerto Rico
5124. Barrington, Town of, Rhode Island
5125. Bristol, Town of, Rhode Island
5126. Burrillville, Town of, Rhode Island
5127. Central Falls, City of, Rhode Island
5128. Coventry, Town of, Rhode Island
5129. Cranston, City of, Rhode Island
5130. Cumberland, Town of, Rhode Island
5131. East Greenwich, Town of, Rhode Island
5132. East Providence, City of, Rhode Island
5133. Glocester, Town of, Rhode Island
5134. Johnston, Town of, Rhode Island
5135. Lincoln, Town of, Rhode Island
5136. Middletown, Town of, Rhode Island
5137. Narragansett, Town of, Rhode Island
5138. Newport, City of, Rhode Island
5139. North Kingstown, Town of, Rhode Island
5140. North Providence, Town of, Rhode Island
5141. North Smithfield, Town of, Rhode Island
5142. Pawtucket, City of, Rhode Island
5143. Portsmouth, Town of, Rhode Island
5144. Providence, City of, Rhode Island
5145. Scituate, Town of, Rhode Island
5146. Smithfield, Town of, Rhode Island
5147. South Kingstown, Town of, Rhode Island
5148. Tiverton, Town of, Rhode Island
5149. Warren, Town of, Rhode Island
5150. Warwick, City of, Rhode Island

5151. West Warwick, Town of, Rhode Island
5152. Westerly, Town of, Rhode Island
5153. Woonsocket, City of, Rhode Island
5154. Abbeville, County of, South Carolina
5155. Aiken, City of, South Carolina
5156. Aiken, County of, South Carolina
5157. Anderson, City of, South Carolina
5158. Anderson, County of, South Carolina
5159. Bamberg, County of, South Carolina
5160. Barnwell, County of, South Carolina
5161. Beaufort, City of, South Carolina
5162. Beaufort, County of, South Carolina
5163. Berkeley, County of, South Carolina
5164. Bluffton, Town of, South Carolina
5165. Calhoun, County of, South Carolina
5166. Cayce, City of, South Carolina
5167. Charleston, City of, South Carolina
5168. Charleston, County of, South Carolina
5169. Cherokee, County of, South Carolina
5170. Chester, County of, South Carolina
5171. Chesterfield, County of, South Carolina
5172. Clarendon, County of, South Carolina
5173. Clemson, City of, South Carolina
5174. Colleton, County of, South Carolina
5175. Columbia, City of, South Carolina
5176. Conway, City of, South Carolina
5177. Darlington, County of, South Carolina
5178. Dillon, County of, South Carolina
5179. Dorchester, County of, South Carolina
5180. Easley, City of, South Carolina
5181. Edgefield, County of, South Carolina
5182. Fairfield, County of, South Carolina
5183. Florence, City of, South Carolina
5184. Florence, County of, South Carolina
5185. Forest Acres, City of, South Carolina
5186. Fort Mill, Town of, South Carolina
5187. Fountain Inn, City of, South Carolina
5188. Gaffney, City of, South Carolina
5189. Georgetown, County of, South Carolina
5190. Goose Creek, City of, South Carolina
5191. Greenville, City of, South Carolina
5192. Greenville, County of, South Carolina
5193. Greenwood, City of, South Carolina
5194. Greenwood, County of, South Carolina
5195. Greer, City of, South Carolina
5196. Hampton, County of, South Carolina
5197. Hanahan, City of, South Carolina
5198. Hilton Head Island, Town of, South Carolina
5199. Horry, County of, South Carolina
5200. Irmo, Town of, South Carolina
5201. James Island, Town of, South Carolina
5202. Jasper, County of, South Carolina
5203. Kershaw, County of, South Carolina
5204. Lancaster, County of, South Carolina
5205. Laurens, County of, South Carolina
5206. Lee, County of, South Carolina
5207. Lexington, County of, South Carolina
5208. Lexington, Town of, South Carolina
5209. Marion, County of, South Carolina
5210. Marlboro, County of, South Carolina
5211. Mauldin, City of, South Carolina
5212. Moncks Corner, Town of, South Carolina
5213. Mount Pleasant, Town of, South Carolina
5214. Myrtle Beach, City of, South Carolina
5215. Newberry, City of, South Carolina
5216. Newberry, County of, South Carolina
5217. North Augusta, City of, South Carolina
5218. North Charleston, City of, South Carolina
5219. North Myrtle Beach, City of, South Carolina
5220. Oconee, County of, South Carolina
5221. Orangeburg, City of, South Carolina

5222. Orangeburg, County of, South Carolina
5223. Pickens, County of, South Carolina
5224. Port Royal, Town of, South Carolina
5225. Richland, County of, South Carolina
5226. Rock Hill, City of, South Carolina
5227. Saluda, County of, South Carolina
5228. Simpsonville, City of, South Carolina
5229. Spartanburg, City of, South Carolina
5230. Spartanburg, County of, South Carolina
5231. Summerville, Town of, South Carolina
5232. Sumter, City of, South Carolina
5233. Sumter, County of, South Carolina
5234. Tega Cay, City of, South Carolina
5235. Union, County of, South Carolina
5236. West Columbia, City of, South Carolina
5237. Williamsburg, County of, South Carolina
5238. York, County of, South Carolina
5239. Aberdeen, City of, South Dakota
5240. Beadle, County of, South Dakota
5241. Box Elder, City of, South Dakota
5242. Brandon, City of, South Dakota
5243. Brookings, City of, South Dakota
5244. Brookings, County of, South Dakota
5245. Brown, County of, South Dakota
5246. Butte, County of, South Dakota
5247. Clay, County of, South Dakota
5248. Codington, County of, South Dakota
5249. Davison, County of, South Dakota
5250. Hughes, County of, South Dakota
5251. Huron, City of, South Dakota
5252. Lake, County of, South Dakota
5253. Lawrence, County of, South Dakota
5254. Lincoln, County of, South Dakota
5255. Meade, County of, South Dakota
5256. Minnehaha, County of, South Dakota
5257. Mitchell, City of, South Dakota
5258. Oglala Lakota, County of, South Dakota
5259. Pennington, County of, South Dakota
5260. Pierre, City of, South Dakota
5261. Rapid City, City of, South Dakota
5262. Roberts, County of, South Dakota
5263. Sioux Falls, City of, South Dakota
5264. Spearfish, City of, South Dakota
5265. Todd, County of, South Dakota
5266. Union, County of, South Dakota
5267. Vermillion, City of, South Dakota
5268. Watertown, City of, South Dakota
5269. Yankton, City of, South Dakota
5270. Yankton, County of, South Dakota
5271. Anderson, County of, Tennessee
5272. Arlington, Town of, Tennessee
5273. Athens, City of, Tennessee
5274. Bartlett, City of, Tennessee
5275. Bedford, County of, Tennessee
5276. Benton, County of, Tennessee
5277. Bledsoe, County of, Tennessee
5278. Blount, County of, Tennessee
5279. Bradley, County of, Tennessee
5280. Brentwood, City of, Tennessee
5281. Bristol, City of, Tennessee
5282. Campbell, County of, Tennessee
5283. Cannon, County of, Tennessee
5284. Carroll, County of, Tennessee
5285. Carter, County of, Tennessee
5286. Chattanooga, City of, Tennessee
5287. Cheatham, County of, Tennessee
5288. Chester, County of, Tennessee
5289. Claiborne, County of, Tennessee
5290. Clarksville, City of, Tennessee
5291. Cleveland, City of, Tennessee
5292. Clinton, City of, Tennessee
5293. Cocke, County of, Tennessee
5294. Coffee, County of, Tennessee
5295. Collegedale, City of, Tennessee
5296. Collierville, Town of, Tennessee
5297. Columbia, City of, Tennessee
5298. Cookeville, City of, Tennessee
5299. Crockett, County of, Tennessee
5300. Crossville, City of, Tennessee
5301. Cumberland, County of, Tennessee
5302. Decatur, County of, Tennessee
5303. DeKalb, County of, Tennessee
5304. Dickson, City of, Tennessee
5305. Dickson, County of, Tennessee

5306. Dyer, County of, Tennessee
5307. Dyersburg, City of, Tennessee
5308. East Ridge, City of, Tennessee
5309. Elizabethton, City of, Tennessee
5310. Farragut, Town of, Tennessee
5311. Fayette, County of, Tennessee
5312. Fentress, County of, Tennessee
5313. Franklin, City of, Tennessee
5314. Franklin, County of, Tennessee
5315. Gallatin, City of, Tennessee
5316. Germantown, City of, Tennessee
5317. Gibson, County of, Tennessee
5318. Giles, County of, Tennessee
5319. Goodlettsville, City of, Tennessee
5320. Grainger, County of, Tennessee
5321. Greene, County of, Tennessee
5322. Greeneville, Town of, Tennessee
5323. Grundy, County of, Tennessee
5324. Hamblen, County of, Tennessee
5325. Hamilton, County of, Tennessee
5326. Hardeman, County of, Tennessee
5327. Hardin, County of, Tennessee
5328. Hartsville/Trousdale, County of, Tennessee
5329. Hawkins, County of, Tennessee
5330. Haywood, County of, Tennessee
5331. Henderson, County of, Tennessee
5332. Hendersonville, City of, Tennessee
5333. Henry, County of, Tennessee
5334. Hickman, County of, Tennessee
5335. Humphreys, County of, Tennessee
5336. Jackson, City of, Tennessee
5337. Jackson, County of, Tennessee
5338. Jefferson, County of, Tennessee
5339. Johnson City, City of, Tennessee
5340. Johnson, County of, Tennessee
5341. Kingsport, City of, Tennessee
5342. Knox, County of, Tennessee
5343. Knoxville, City of, Tennessee
5344. La Vergne, City of, Tennessee
5345. Lakeland, City of, Tennessee
5346. Lauderdale, County of, Tennessee
5347. Lawrence, County of, Tennessee
5348. Lawrenceburg, City of, Tennessee
5349. Lebanon, City of, Tennessee
5350. Lewis, County of, Tennessee
5351. Lewisburg, City of, Tennessee
5352. Lincoln, County of, Tennessee
5353. Loudon, County of, Tennessee
5354. Macon, County of, Tennessee
5355. Madison, County of, Tennessee
5356. Manchester, City of, Tennessee
5357. Marion, County of, Tennessee
5358. Marshall, County of, Tennessee
5359. Martin, City of, Tennessee
5360. Maryville, City of, Tennessee
5361. Maury, County of, Tennessee
5362. McMinn, County of, Tennessee
5363. McMinnville, City of, Tennessee
5364. McNairy, County of, Tennessee
5365. Meigs, County of, Tennessee
5366. Memphis, City of, Tennessee
5367. Millington, City of, Tennessee
5368. Monroe, County of, Tennessee
5369. Montgomery, County of, Tennessee
5370. Morgan, County of, Tennessee
5371. Morristown, City of, Tennessee
5372. Mount Juliet, City of, Tennessee
5373. Murfreesboro, City of, Tennessee
5374. Nashville-Davidson, Metropolitan Government, Tennessee
5375. Nolensville, Town of, Tennessee
5376. Oak Ridge, City of, Tennessee
5377. Obion, County of, Tennessee
5378. Overton, County of, Tennessee
5379. Paris, City of, Tennessee
5380. Polk, County of, Tennessee
5381. Portland, City of, Tennessee
5382. Putnam, County of, Tennessee
5383. Red Bank, City of, Tennessee
5384. Rhea, County of, Tennessee
5385. Roane, County of, Tennessee
5386. Robertson, County of, Tennessee
5387. Rutherford, County of, Tennessee
5388. Scott, County of, Tennessee
5389. Sequatchie, County of, Tennessee
5390. Sevier, County of, Tennessee
5391. Sevierville, City of, Tennessee
5392. Shelby, County of, Tennessee
5393. Shelbyville, City of, Tennessee
5394. Smith, County of, Tennessee
5395. Smyrna, Town of, Tennessee

5396. Soddy-Daisy, City of, Tennessee
5397. Spring Hill, City of, Tennessee
5398. Springfield, City of, Tennessee
5399. Stewart, County of, Tennessee
5400. Sullivan, County of, Tennessee
5401. Sumner, County of, Tennessee
5402. Tipton, County of, Tennessee
5403. Tullahoma, City of, Tennessee
5404. Unicoi, County of, Tennessee
5405. Union City, City of, Tennessee
5406. Union, County of, Tennessee
5407. Warren, County of, Tennessee
5408. Washington, County of, Tennessee
5409. Wayne, County of, Tennessee
5410. Weakley, County of, Tennessee
5411. White, County of, Tennessee
5412. White House, City of, Tennessee
5413. Williamson, County of, Tennessee
5414. Wilson, County of, Tennessee
5415. Abilene, City of, Texas
5416. Addison, Town of, Texas
5417. Alamo, City of, Texas
5418. Alice, City of, Texas
5419. Allen, City of, Texas
5420. Alton, City of, Texas
5421. Alvin, City of, Texas
5422. Amarillo, City of, Texas
5423. Anderson, County of, Texas
5424. Andrews, City of, Texas
5425. Andrews, County of, Texas
5426. Angelina, County of, Texas
5427. Angleton, City of, Texas
5428. Anna, City of, Texas
5429. Aransas, County of, Texas
5430. Arlington, City of, Texas
5431. Atascosa, County of, Texas
5432. Athens, City of, Texas
5433. Austin, City of, Texas
5434. Austin, County of, Texas
5435. Azle, City of, Texas
5436. Balch Springs, City of, Texas
5437. Bandera, County of, Texas
5438. Bastrop, County of, Texas
5439. Bay City, City of, Texas
5440. Baytown, City of, Texas
5441. Beaumont, City of, Texas
5442. Bedford, City of, Texas
5443. Bee, County of, Texas
5444. Beeville, City of, Texas
5445. Bell, County of, Texas
5446. Bellaire, City of, Texas
5447. Bellmead, City of, Texas
5448. Belton, City of, Texas
5449. Benbrook, City of, Texas
5450. Bexar, County of, Texas
5451. Big Spring, City of, Texas
5452. Blanco, County of, Texas
5453. Boerne, City of, Texas
5454. Bonham, City of, Texas
5455. Borger, City of, Texas
5456. Bosque, County of, Texas
5457. Bowie, County of, Texas
5458. Brazoria, County of, Texas
5459. Brazos, County of, Texas
5460. Brenham, City of, Texas
5461. Brown, County of, Texas
5462. Brownsville, City of, Texas
5463. Brownwood, City of, Texas
5464. Bryan, City of, Texas
5465. Buda, City of, Texas
5466. Burkburnett, City of, Texas
5467. Burleson, City of, Texas
5468. Burleson, County of, Texas
5469. Burnet, County of, Texas
5470. Caldwell, County of, Texas
5471. Calhoun, County of, Texas
5472. Callahan, County of, Texas
5473. Cameron, County of, Texas
5474. Camp, County of, Texas
5475. Canyon, City of, Texas
5476. Carrollton, City of, Texas
5477. Cass, County of, Texas
5478. Cedar Hill, City of, Texas
5479. Cedar Park, City of, Texas
5480. Celina, City of, Texas
5481. Chambers, County of, Texas
5482. Cherokee, County of, Texas
5483. Cibolo, City of, Texas
5484. Clay, County of, Texas
5485. Cleburne, City of, Texas
5486. Clute, City of, Texas
5487. College Station, City of, Texas

5488. Colleyville, City of, Texas
5489. Collin, County of, Texas
5490. Colorado, County of, Texas
5491. Comal, County of, Texas
5492. Comanche, County of, Texas
5493. Conroe, City of, Texas
5494. Converse, City of, Texas
5495. Cooke, County of, Texas
5496. Coppell, City of, Texas
5497. Copperas Cove, City of, Texas
5498. Corinth, City of, Texas
5499. Corpus Christi, City of, Texas
5500. Corsicana, City of, Texas
5501. Coryell, County of, Texas
5502. Crowley, City of, Texas
5503. Dallas, City of, Texas
5504. Dallas, County of, Texas
5505. Dawson, County of, Texas
5506. Deaf Smith, County of, Texas
5507. Deer Park, City of, Texas
5508. Del Rio, City of, Texas
5509. Denison, City of, Texas
5510. Denton, City of, Texas
5511. Denton, County of, Texas
5512. DeSoto, City of, Texas
5513. DeWitt, County of, Texas
5514. Dickinson, City of, Texas
5515. Dimmit, County of, Texas
5516. Donna, City of, Texas
5517. Dumas, City of, Texas
5518. Duncanville, City of, Texas
5519. Duval, County of, Texas
5520. Eagle Pass, City of, Texas
5521. Eastland, County of, Texas
5522. Ector, County of, Texas
5523. Edinburg, City of, Texas
5524. El Campo, City of, Texas
5525. El Paso, City of, Texas
5526. El Paso, County of, Texas
5527. Elgin, City of, Texas
5528. Ellis, County of, Texas
5529. Ennis, City of, Texas
5530. Erath, County of, Texas
5531. Euless, City of, Texas
5532. Fair Oaks Ranch, City of, Texas
5533. Falls, County of, Texas
5534. Fannin, County of, Texas
5535. Farmers Branch, City of, Texas
5536. Fate, City of, Texas
5537. Fayette, County of, Texas
5538. Flower Mound, Town of, Texas
5539. Forest Hill, City of, Texas
5540. Forney, City of, Texas
5541. Fort Bend, County of, Texas
5542. Fort Worth, City of, Texas
5543. Franklin, County of, Texas
5544. Fredericksburg, City of, Texas
5545. Freeport, City of, Texas
5546. Freestone, County of, Texas
5547. Friendswood, City of, Texas
5548. Frio, County of, Texas
5549. Frisco, City of, Texas
5550. Fulshear, City of, Texas
5551. Gaines, County of, Texas
5552. Gainesville, City of, Texas
5553. Galena Park, City of, Texas
5554. Galveston, City of, Texas
5555. Galveston, County of, Texas
5556. Garland, City of, Texas
5557. Gatesville, City of, Texas
5558. Georgetown, City of, Texas
5559. Gillespie, County of, Texas
5560. Glenn Heights, City of, Texas
5561. Gonzales, County of, Texas
5562. Granbury, City of, Texas
5563. Grand Prairie, City of, Texas
5564. Grapevine, City of, Texas
5565. Gray, County of, Texas
5566. Grayson, County of, Texas
5567. Greenville, City of, Texas
5568. Gregg, County of, Texas
5569. Grimes, County of, Texas
5570. Groves, City of, Texas
5571. Guadalupe, County of, Texas
5572. Hale, County of, Texas
5573. Haltom City, City of, Texas
5574. Hardin, County of, Texas
5575. Harker Heights, City of, Texas
5576. Harlingen, City of, Texas
5577. Harris, County of, Texas
5578. Harrison, County of, Texas
5579. Hays, County of, Texas

5580. Henderson, City of, Texas
5581. Henderson, County of, Texas
5582. Hereford, City of, Texas
5583. Hewitt, City of, Texas
5584. Hidalgo, City of, Texas
5585. Hidalgo, County of, Texas
5586. Highland, Village of, City of, Texas
5587. Hill, County of, Texas
5588. Hockley, County of, Texas
5589. Hood, County of, Texas
5590. Hopkins, County of, Texas
5591. Horizon City, City of, Texas
5592. Houston, City of, Texas
5593. Houston, County of, Texas
5594. Howard, County of, Texas
5595. Humble, City of, Texas
5596. Hunt, County of, Texas
5597. Huntsville, City of, Texas
5598. Hurst, City of, Texas
5599. Hutchinson, County of, Texas
5600. Hutto, City of, Texas
5601. Ingleside, City of, Texas
5602. Irving, City of, Texas
5603. Jacinto City, City of, Texas
5604. Jackson, County of, Texas
5605. Jacksonville, City of, Texas
5606. Jasper, County of, Texas
5607. Jefferson, County of, Texas
5608. Jim Wells, County of, Texas
5609. Johnson, County of, Texas
5610. Jones, County of, Texas
5611. Karnes, County of, Texas
5612. Katy, City of, Texas
5613. Kaufman, County of, Texas
5614. Keller, City of, Texas
5615. Kendall, County of, Texas
5616. Kerr, County of, Texas
5617. Kerrville, City of, Texas
5618. Kilgore, City of, Texas
5619. Killeen, City of, Texas
5620. Kingsville, City of, Texas
5621. Kleberg, County of, Texas
5622. Kyle, City of, Texas
5623. La Marque, City of, Texas
5624. La Porte, City of, Texas
5625. Lake Jackson, City of, Texas
5626. Lakeway, City of, Texas
5627. Lamar, County of, Texas
5628. Lamb, County of, Texas
5629. Lampasas, County of, Texas
5630. Lancaster, City of, Texas
5631. Laredo, City of, Texas
5632. Lavaca, County of, Texas
5633. League City, City of, Texas
5634. Leander, City of, Texas
5635. Lee, County of, Texas
5636. Leon, County of, Texas
5637. Leon Valley, City of, Texas
5638. Levelland, City of, Texas
5639. Lewisville, City of, Texas
5640. Liberty, County of, Texas
5641. Limestone, County of, Texas
5642. Little Elm, City of, Texas
5643. Live Oak, City of, Texas
5644. Live Oak, County of, Texas
5645. Llano, County of, Texas
5646. Lockhart, City of, Texas
5647. Longview, City of, Texas
5648. Lubbock, City of, Texas
5649. Lubbock, County of, Texas
5650. Lufkin, City of, Texas
5651. Lumberton, City of, Texas
5652. Madison, County of, Texas
5653. Manor, City of, Texas
5654. Mansfield, City of, Texas
5655. Manvel, City of, Texas
5656. Marshall, City of, Texas
5657. Matagorda, County of, Texas
5658. Maverick, County of, Texas
5659. McAllen, City of, Texas
5660. McKinney, City of, Texas
5661. McLennan, County of, Texas
5662. Medina, County of, Texas
5663. Melissa, City of, Texas
5664. Mercedes, City of, Texas
5665. Mesquite, City of, Texas
5666. Midland, City of, Texas
5667. Midland, County of, Texas
5668. Midlothian, City of, Texas
5669. Milam, County of, Texas
5670. Mineral Wells, City of, Texas
5671. Mission, City of, Texas

5672. Missouri City, City of, Texas
5673. Montague, County of, Texas
5674. Montgomery, County of, Texas
5675. Moore, County of, Texas
5676. Morris, County of, Texas
5677. Mount Pleasant, City of, Texas
5678. Murphy, City of, Texas
5679. Nacogdoches, City of, Texas
5680. Nacogdoches, County of, Texas
5681. Navarro, County of, Texas
5682. Nederland, City of, Texas
5683. New Braunfels, City of, Texas
5684. Newton, County of, Texas
5685. Nolan, County of, Texas
5686. North Richland Hills, City of, Texas
5687. Nueces, County of, Texas
5688. Odessa, City of, Texas
5689. Orange, City of, Texas
5690. Orange, County of, Texas
5691. Palestine, City of, Texas
5692. Palo Pinto, County of, Texas
5693. Pampa, City of, Texas
5694. Panola, County of, Texas
5695. Paris, City of, Texas
5696. Parker, County of, Texas
5697. Pasadena, City of, Texas
5698. Pearland, City of, Texas
5699. Pearsall, City of, Texas
5700. Pecos, City of, Texas
5701. Pecos, County of, Texas
5702. Pflugerville, City of, Texas
5703. Pharr, City of, Texas
5704. Plainview, City of, Texas
5705. Plano, City of, Texas
5706. Pleasanton, City of, Texas
5707. Polk, County of, Texas
5708. Port Arthur, City of, Texas
5709. Port Lavaca, City of, Texas
5710. Port Neches, City of, Texas
5711. Portland, City of, Texas
5712. Potter, County of, Texas
5713. Princeton, City of, Texas
5714. Prosper, Town of, Texas
5715. Rains, County of, Texas
5716. Randall, County of, Texas
5717. Raymondville, City of, Texas
5718. Red Oak, City of, Texas
5719. Red River, County of, Texas
5720. Reeves, County of, Texas
5721. Richardson, City of, Texas
5722. Richmond, City of, Texas
5723. Rio Grande City, City of, Texas
5724. Robertson, County of, Texas
5725. Robinson, City of, Texas
5726. Robstown, City of, Texas
5727. Rockport, City of, Texas
5728. Rockwall, City of, Texas
5729. Rockwall, County of, Texas
5730. Roma, City of, Texas
5731. Rosenberg, City of, Texas
5732. Round Rock, City of, Texas
5733. Rowlett, City of, Texas
5734. Royse City, City of, Texas
5735. Runnels, County of, Texas
5736. Rusk, County of, Texas
5737. Sabine, County of, Texas
5738. Sachse, City of, Texas
5739. Saginaw, City of, Texas
5740. San Angelo, City of, Texas
5741. San Antonio, City of, Texas
5742. San Benito, City of, Texas
5743. San Jacinto, County of, Texas
5744. San Juan, City of, Texas
5745. San Marcos, City of, Texas
5746. San Patricio, County of, Texas
5747. Santa Fe, City of, Texas
5748. Schertz, City of, Texas
5749. Scurry, County of, Texas
5750. Seabrook, City of, Texas
5751. Seagoville, City of, Texas
5752. Seguin, City of, Texas
5753. Selma, City of, Texas
5754. Shelby, County of, Texas
5755. Sherman, City of, Texas
5756. Smith, County of, Texas
5757. Snyder, City of, Texas
5758. Socorro, City of, Texas
5759. South Houston, City of, Texas
5760. Southlake, City of, Texas
5761. Stafford, City of, Texas
5762. Starr, County of, Texas
5763. Stephenville, City of, Texas

5764. Sugar Land, City of, Texas
5765. Sulphur Springs, City of, Texas
5766. Sweetwater, City of, Texas
5767. Tarrant, County of, Texas
5768. Taylor, City of, Texas
5769. Taylor, County of, Texas
5770. Temple, City of, Texas
5771. Terrell, City of, Texas
5772. Terry, County of, Texas
5773. Texarkana, City of, Texas
5774. Texas City, City of, Texas
5775. The Colony, City of, Texas
5776. Titus, County of, Texas
5777. Tom Green, County of, Texas
5778. Tomball, City of, Texas
5779. Travis, County of, Texas
5780. Trinity, County of, Texas
5781. Trophy Club, Town of, Texas
5782. Tyler, City of, Texas
5783. Tyler, County of, Texas
5784. Universal City, City of, Texas
5785. University Park, City of, Texas
5786. Upshur, County of, Texas
5787. Uvalde, City of, Texas
5788. Uvalde, County of, Texas
5789. Val Verde, County of, Texas
5790. Van Zandt, County of, Texas
5791. Vernon, City of, Texas
5792. Victoria, City of, Texas
5793. Victoria, County of, Texas
5794. Vidor, City of, Texas
5795. Waco, City of, Texas
5796. Walker, County of, Texas
5797. Waller, County of, Texas
5798. Ward, County of, Texas
5799. Washington, County of, Texas
5800. Watauga, City of, Texas
5801. Waxahachie, City of, Texas
5802. Weatherford, City of, Texas
5803. Webb, County of, Texas
5804. Webster, City of, Texas
5805. Weslaco, City of, Texas
5806. West University Place, City of, Texas
5807. Wharton, County of, Texas
5808. White Settlement, City of, Texas
5809. Wichita, County of, Texas
5810. Wichita Falls, City of, Texas
5811. Wilbarger, County of, Texas
5812. Willacy, County of, Texas
5813. Williamson, County of, Texas
5814. Wilson, County of, Texas
5815. Wise, County of, Texas
5816. Wood, County of, Texas
5817. Wylie, City of, Texas
5818. Young, County of, Texas
5819. Zapata, County of, Texas
5820. Zavala, County of, Texas
5821. Alpine, City of, Utah
5822. American Fork, City of, Utah
5823. Bluffdale, City of, Utah
5824. Bountiful, City of, Utah
5825. Box Elder, County of, Utah
5826. Brigham City, City of, Utah
5827. Cache, County of, Utah
5828. Carbon, County of, Utah
5829. Cedar City, City of, Utah
5830. Cedar Hills, City of, Utah
5831. Centerville, City of, Utah
5832. Clearfield, City of, Utah
5833. Clinton, City of, Utah
5834. Cottonwood Heights, City of, Utah
5835. Davis, County of, Utah
5836. Draper, City of, Utah
5837. Duchesne, County of, Utah
5838. Eagle Mountain, City of, Utah
5839. Emery, County of, Utah
5840. Farmington, City of, Utah
5841. Grantsville, City of, Utah
5842. Heber, City of, Utah
5843. Herriman, City of, Utah
5844. Highland, City of, Utah
5845. Holladay, City of, Utah
5846. Hurricane, City of, Utah
5847. Iron, County of, Utah
5848. Juab, County of, Utah
5849. Kaysville, City of, Utah
5850. Kearns metro, Township of, Utah
5851. Layton, City of, Utah
5852. Lehi, City of, Utah
5853. Lindon, City of, Utah
5854. Logan, City of, Utah

5855. Magna metro, Township of, Utah
5856. Mapleton, City of, Utah
5857. Midvale, City of, Utah
5858. Millard, County of, Utah
5859. Millcreek, City of, Utah
5860. Morgan, County of, Utah
5861. Murray, City of, Utah
5862. North Logan, City of, Utah
5863. North Ogden, City of, Utah
5864. North Salt Lake, City of, Utah
5865. Ogden, City of, Utah
5866. Orem, City of, Utah
5867. Payson, City of, Utah
5868. Pleasant Grove, City of, Utah
5869. Pleasant View, City of, Utah
5870. Provo, City of, Utah
5871. Riverton, City of, Utah
5872. Roy, City of, Utah
5873. Salt Lake City, City of, Utah
5874. Salt Lake, County of, Utah
5875. San Juan, County of, Utah
5876. Sandy, City of, Utah
5877. Sanpete, County of, Utah
5878. Santaquin, City of, Utah
5879. Saratoga Springs, City of, Utah
5880. Sevier, County of, Utah
5881. Smithfield, City of, Utah
5882. South Jordan, City of, Utah
5883. South Ogden, City of, Utah
5884. South Salt Lake, City of, Utah
5885. Spanish Fork, City of, Utah
5886. Springville, City of, Utah
5887. St. George, City of, Utah
5888. Summit, County of, Utah
5889. Syracuse, City of, Utah
5890. Taylorsville, City of, Utah
5891. Tooele, City of, Utah
5892. Tooele, County of, Utah
5893. Uintah, County of, Utah
5894. Utah, County of, Utah
5895. Vernal, City of, Utah
5896. Vineyard, Town of, Utah
5897. Wasatch, County of, Utah
5898. Washington, City of, Utah
5899. Washington, County of, Utah
5900. Weber, County of, Utah
5901. West Haven, City of, Utah
5902. West Jordan, City of, Utah
5903. West Point, City of, Utah
5904. West Valley City, City of, Utah
5905. Woods Cross, City of, Utah
5906. Addison, County of, Vermont
5907. Bennington, County of, Vermont
5908. Bennington, Town of, Vermont
5909. Brattleboro, Town of, Vermont
5910. Burlington, City of, Vermont
5911. Caledonia, County of, Vermont
5912. Chittenden, County of, Vermont
5913. Colchester, Town of, Vermont
5914. Essex Junction, Village of, Vermont
5915. Essex, Town of, Vermont
5916. Franklin, County of, Vermont
5917. Lamoille, County of, Vermont
5918. Milton, Town of, Vermont
5919. Orange, County of, Vermont
5920. Orleans, County of, Vermont
5921. Rutland, City of, Vermont
5922. Rutland, County of, Vermont
5923. South Burlington, City of, Vermont
5924. Washington, County of, Vermont
5925. Williston, Town of, Vermont
5926. Windham, County of, Vermont
5927. Windsor, County of, Vermont
5928. Accomack, County of, Virginia
5929. Albemarle, County of, Virginia
5930. Alexandria, City of, Virginia
5931. Alleghany, County of, Virginia
5932. Amelia, County of, Virginia
5933. Amherst, County of, Virginia
5934. Appomattox, County of, Virginia
5935. Arlington, County of, Virginia
5936. Augusta, County of, Virginia
5937. Bedford, County of, Virginia
5938. Blacksburg, Town of, Virginia
5939. Botetourt, County of, Virginia
5940. Bristol, City of, Virginia
5941. Brunswick, County of, Virginia
5942. Buchanan, County of, Virginia
5943. Buckingham, County of, Virginia
5944. Campbell, County of, Virginia
5945. Caroline, County of, Virginia
5946. Carroll, County of, Virginia

5947. Charlotte, County of, Virginia
5948. Charlottesville, City of, Virginia
5949. Chesapeake, City of, Virginia
5950. Chesterfield, County of, Virginia
5951. Christiansburg, Town of, Virginia
5952. Clarke, County of, Virginia
5953. Colonial Heights, City of, Virginia
5954. Culpeper, County of, Virginia
5955. Culpeper, Town of, Virginia
5956. Danville, City of, Virginia
5957. Dickenson, County of, Virginia
5958. Dinwiddie, County of, Virginia
5959. Essex, County of, Virginia
5960. Fairfax, City of, Virginia
5961. Fairfax, County of, Virginia
5962. Falls Church, City of, Virginia
5963. Fauquier, County of, Virginia
5964. Floyd, County of, Virginia
5965. Fluvanna, County of, Virginia
5966. Franklin, County of, Virginia
5967. Frederick, County of, Virginia
5968. Fredericksburg, City of, Virginia
5969. Front Royal, Town of, Virginia
5970. Giles, County of, Virginia
5971. Gloucester, County of, Virginia
5972. Goochland, County of, Virginia
5973. Grayson, County of, Virginia
5974. Greene, County of, Virginia
5975. Greensville, County of, Virginia
5976. Halifax, County of, Virginia
5977. Hampton, City of, Virginia
5978. Hanover, County of, Virginia
5979. Harrisonburg, City of, Virginia
5980. Henrico, County of, Virginia
5981. Henry, County of, Virginia
5982. Herndon, Town of, Virginia
5983. Hopewell, City of, Virginia
5984. Isle of Wight, County of, Virginia
5985. James City, County of, Virginia
5986. King George, County of, Virginia
5987. King William, County of, Virginia
5988. Lancaster, County of, Virginia
5989. Lee, County of, Virginia
5990. Leesburg, Town of, Virginia
5991. Loudoun, County of, Virginia
5992. Louisa, County of, Virginia
5993. Lunenburg, County of, Virginia
5994. Lynchburg, City of, Virginia
5995. Madison, County of, Virginia
5996. Manassas, City of, Virginia
5997. Manassas Park, City of, Virginia
5998. Martinsville, City of, Virginia
5999. Mecklenburg, County of, Virginia
6000. Middlesex, County of, Virginia
6001. Montgomery, County of, Virginia
6002. Nelson, County of, Virginia
6003. New Kent, County of, Virginia
6004. Newport News, City of, Virginia
6005. Norfolk, City of, Virginia
6006. Northampton, County of, Virginia
6007. Northumberland, County of, Virginia
6008. Nottoway, County of, Virginia
6009. Orange, County of, Virginia
6010. Page, County of, Virginia
6011. Patrick, County of, Virginia
6012. Petersburg, City of, Virginia
6013. Pittsylvania, County of, Virginia
6014. Poquoson, City of, Virginia
6015. Portsmouth, City of, Virginia
6016. Powhatan, County of, Virginia
6017. Prince Edward, County of, Virginia
6018. Prince George, County of, Virginia
6019. Prince William, County of, Virginia
6020. Pulaski, County of, Virginia
6021. Purcellville, Town of, Virginia
6022. Radford, City of, Virginia
6023. Richmond, City of, Virginia
6024. Roanoke, City of, Virginia
6025. Roanoke, County of, Virginia
6026. Rockbridge, County of, Virginia
6027. Rockingham, County of, Virginia
6028. Russell, County of, Virginia
6029. Salem, City of, Virginia
6030. Scott, County of, Virginia
6031. Shenandoah, County of, Virginia
6032. Smyth, County of, Virginia
6033. Southampton, County of, Virginia
6034. Spotsylvania, County of, Virginia
6035. Stafford, County of, Virginia
6036. Staunton, City of, Virginia
6037. Suffolk, City of, Virginia
6038. Sussex, County of, Virginia

6039. Tazewell, County of, Virginia
6040. Vienna, Town of, Virginia
6041. Virginia Beach, City of, Virginia
6042. Warren, County of, Virginia
6043. Warrenton, Town of, Virginia
6044. Washington, County of, Virginia
6045. Waynesboro, City of, Virginia
6046. Westmoreland, County of, Virginia
6047. Williamsburg, City of, Virginia
6048. Winchester, City of, Virginia
6049. Wise, County of, Virginia
6050. Wythe, County of, Virginia
6051. York, County of, Virginia
6052. Aberdeen, City of, Washington
6053. Adams, County of, Washington
6054. Anacortes, City of, Washington
6055. Arlington, City of, Washington
6056. Asotin, County of, Washington
6057. Auburn, City of, Washington
6058. Bainbridge Island, City of, Washington
6059. Battle Ground, City of, Washington
6060. Bellevue, City of, Washington
6061. Bellingham, City of, Washington
6062. Benton, County of, Washington
6063. Bonney Lake, City of, Washington
6064. Bothell, City of, Washington
6065. Bremerton, City of, Washington
6066. Burien, City of, Washington
6067. Camas, City of, Washington
6068. Centralia, City of, Washington
6069. Chelan, County of, Washington
6070. Cheney, City of, Washington
6071. Clallam, County of, Washington
6072. Clark, County of, Washington
6073. Covington, City of, Washington
6074. Cowlitz, County of, Washington
6075. Des Moines, City of, Washington
6076. Douglas, County of, Washington
6077. East Wenatchee, City of, Washington
6078. Edgewood, City of, Washington
6079. Edmonds, City of, Washington
6080. Ellensburg, City of, Washington
6081. Enumclaw, City of, Washington
6082. Everett, City of, Washington
6083. Federal Way, City of, Washington
6084. Ferndale, City of, Washington
6085. Fife, City of, Washington
6086. Franklin, County of, Washington
6087. Gig Harbor, City of, Washington
6088. Grandview, City of, Washington
6089. Grant, County of, Washington
6090. Grays Harbor, County of, Washington
6091. Island, County of, Washington
6092. Issaquah, City of, Washington
6093. Jefferson, County of, Washington
6094. Kelso, City of, Washington
6095. Kenmore, City of, Washington
6096. Kennewick, City of, Washington
6097. Kent, City of, Washington
6098. King, County of, Washington
6099. Kirkland, City of, Washington
6100. Kitsap, County of, Washington
6101. Kittitas, County of, Washington
6102. Klickitat, County of, Washington
6103. Lacey, City of, Washington
6104. Lake Forest Park, City of, Washington
6105. Lake Stevens, City of, Washington
6106. Lakewood, City of, Washington
6107. Lewis, County of, Washington
6108. Liberty Lake, City of, Washington
6109. Lincoln, County of, Washington
6110. Longview, City of, Washington
6111. Lynden, City of, Washington
6112. Lynnwood, City of, Washington
6113. Maple Valley, City of, Washington
6114. Marysville, City of, Washington
6115. Mason, County of, Washington
6116. Mercer Island, City of, Washington
6117. Mill Creek, City of, Washington
6118. Monroe, City of, Washington
6119. Moses Lake, City of, Washington
6120. Mount Vernon, City of, Washington
6121. Mountlake Terrace, City of, Washington
6122. Mukilteo, City of, Washington
6123. Newcastle, City of, Washington
6124. Oak Harbor, City of, Washington
6125. Okanogan, County of, Washington

6126. Olympia, City of, Washington
6127. Pacific, County of, Washington
6128. Pasco, City of, Washington
6129. Pend Oreille, County of, Washington
6130. Pierce, County of, Washington
6131. Port Angeles, City of, Washington
6132. Port Orchard, City of, Washington
6133. Poulsbo, City of, Washington
6134. Pullman, City of, Washington
6135. Puyallup, City of, Washington
6136. Redmond, City of, Washington
6137. Renton, City of, Washington
6138. Richland, City of, Washington
6139. Sammamish, City of, Washington
6140. San Juan, County of, Washington
6141. SeaTac, City of, Washington
6142. Seattle, City of, Washington
6143. Sedro-Woolley, City of, Washington
6144. Shelton, City of, Washington
6145. Shoreline, City of, Washington
6146. Skagit, County of, Washington
6147. Skamania, County of, Washington
6148. Snohomish, City of, Washington
6149. Snohomish, County of, Washington
6150. Snoqualmie, City of, Washington
6151. Spokane, City of, Washington
6152. Spokane, County of, Washington
6153. Spokane Valley, City of, Washington
6154. Stevens, County of, Washington
6155. Sumner, City of, Washington
6156. Sunnyside, City of, Washington
6157. Tacoma, City of, Washington
6158. Thurston, County of, Washington
6159. Tukwila, City of, Washington
6160. Tumwater, City of, Washington
6161. University Place, City of, Washington
6162. Vancouver, City of, Washington
6163. Walla Walla, City of, Washington
6164. Walla Walla, County of, Washington
6165. Washougal, City of, Washington
6166. Wenatchee, City of, Washington
6167. West Richland, City of, Washington
6168. Whatcom, County of, Washington
6169. Whitman, County of, Washington
6170. Woodinville, City of, Washington
6171. Yakima, City of, Washington
6172. Yakima, County of, Washington
6173. Adams, County of, Wisconsin
6174. Allouez, Village of, Wisconsin
6175. Appleton, City of, Wisconsin
6176. Ashland, County of, Wisconsin
6177. Ashwaubenon, Village of, Wisconsin
6178. Baraboo, City of, Wisconsin
6179. Barron, County of, Wisconsin
6180. Bayfield, County of, Wisconsin
6181. Beaver Dam, City of, Wisconsin
6182. Bellevue, Village of, Wisconsin
6183. Beloit, City of, Wisconsin
6184. Brookfield, City of, Wisconsin
6185. Brown, County of, Wisconsin
6186. Brown Deer, Village of, Wisconsin
6187. Buffalo, County of, Wisconsin
6188. Burlington, City of, Wisconsin
6189. Burnett, County of, Wisconsin
6190. Caledonia, Village of, Wisconsin
6191. Calumet, County of, Wisconsin
6192. Cedarburg, City of, Wisconsin
6193. Chippewa, County of, Wisconsin
6194. Chippewa Falls, City of, Wisconsin
6195. Clark, County of, Wisconsin
6196. Columbia, County of, Wisconsin
6197. Crawford, County of, Wisconsin
6198. Cudahy, City of, Wisconsin
6199. Dane, County of, Wisconsin
6200. De Pere, City of, Wisconsin
6201. DeForest, Village of, Wisconsin
6202. Dodge, County of, Wisconsin
6203. Door, County of, Wisconsin
6204. Douglas, County of, Wisconsin
6205. Dunn, County of, Wisconsin
6206. Eau Claire, City of, Wisconsin
6207. Eau Claire, County of, Wisconsin
6208. Elkhorn, City of, Wisconsin
6209. Fitchburg, City of, Wisconsin
6210. Fond du Lac, City of, Wisconsin
6211. Fond du Lac, County of, Wisconsin
6212. Fort Atkinson, City of, Wisconsin
6213. Fox Crossing, Village of, Wisconsin
6214. Franklin, City of, Wisconsin
6215. Germantown, Village of, Wisconsin
6216. Glendale, City of, Wisconsin

6217. Grafton, Village of, Wisconsin
6218. Grand Chute, Town of, Wisconsin
6219. Grant, County of, Wisconsin
6220. Green Bay, City of, Wisconsin
6221. Green, County of, Wisconsin
6222. Green Lake, County of, Wisconsin
6223. Greendale, Village of, Wisconsin
6224. Greenfield, City of, Wisconsin
6225. Greenville, Town of, Wisconsin
6226. Harrison, Village of, Wisconsin
6227. Hartford, City of, Wisconsin
6228. Hobart, Village of, Wisconsin
6229. Holmen, Village of, Wisconsin
6230. Howard, Village of, Wisconsin
6231. Hudson, City of, Wisconsin
6232. Iowa, County of, Wisconsin
6233. Jackson, County of, Wisconsin
6234. Janesville, City of, Wisconsin
6235. Jefferson, County of, Wisconsin
6236. Juneau, County of, Wisconsin
6237. Kaukauna, City of, Wisconsin
6238. Kenosha, City of, Wisconsin
6239. Kenosha, County of, Wisconsin
6240. Kewaunee, County of, Wisconsin
6241. La Crosse, City of, Wisconsin
6242. La Crosse, County of, Wisconsin
6243. Lafayette, County of, Wisconsin
6244. Langlade, County of, Wisconsin
6245. Lincoln, County of, Wisconsin
6246. Lisbon, Town of, Wisconsin
6247. Little Chute, Village of, Wisconsin
6248. Madison, City of, Wisconsin
6249. Manitowoc, City of, Wisconsin
6250. Manitowoc, County of, Wisconsin
6251. Marathon, County of, Wisconsin
6252. Marinette, City of, Wisconsin
6253. Marinette, County of, Wisconsin
6254. Marquette, County of, Wisconsin
6255. Marshfield, City of, Wisconsin
6256. Menasha, City of, Wisconsin
6257. Menomonee Falls, Village of, Wisconsin
6258. Menomonie, City of, Wisconsin
6259. Mequon, City of, Wisconsin
6260. Middleton, City of, Wisconsin
6261. Milwaukee, City of, Wisconsin
6262. Milwaukee, County of, Wisconsin
6263. Monroe, City of, Wisconsin
6264. Monroe, County of, Wisconsin
6265. Mount Pleasant, Village of, Wisconsin
6266. Muskego, City of, Wisconsin
6267. Neenah, City of, Wisconsin
6268. New Berlin, City of, Wisconsin
6269. Oak Creek, City of, Wisconsin
6270. Oconomowoc, City of, Wisconsin
6271. Oconto, County of, Wisconsin
6272. Onalaska, City of, Wisconsin
6273. Oneida, County of, Wisconsin
6274. Oregon, Village of, Wisconsin
6275. Oshkosh, City of, Wisconsin
6276. Outagamie, County of, Wisconsin
6277. Ozaukee, County of, Wisconsin
6278. Pewaukee, City of, Wisconsin
6279. Pierce, County of, Wisconsin
6280. Platteville, City of, Wisconsin
6281. Pleasant Prairie, Village of, Wisconsin
6282. Plover, Village of, Wisconsin
6283. Polk, County of, Wisconsin
6284. Port Washington, City of, Wisconsin
6285. Portage, City of, Wisconsin
6286. Portage, County of, Wisconsin
6287. Price, County of, Wisconsin
6288. Racine, City of, Wisconsin
6289. Racine, County of, Wisconsin
6290. Richfield, Village of, Wisconsin
6291. Richland, County of, Wisconsin
6292. River Falls, City of, Wisconsin
6293. Rock, County of, Wisconsin
6294. Rusk, County of, Wisconsin
6295. Salem Lakes, Village of, Wisconsin
6296. Sauk, County of, Wisconsin
6297. Sawyer, County of, Wisconsin
6298. Shawano, County of, Wisconsin
6299. Sheboygan, City of, Wisconsin
6300. Sheboygan, County of, Wisconsin
6301. Shorewood, Village of, Wisconsin
6302. South Milwaukee, City of, Wisconsin
6303. St. Croix, County of, Wisconsin
6304. Stevens Point, City of, Wisconsin

6305. Stoughton, City of, Wisconsin
6306. Suamico, Village of, Wisconsin
6307. Sun Prairie, City of, Wisconsin
6308. Superior, City of, Wisconsin
6309. Sussex, Village of, Wisconsin
6310. Taylor, County of, Wisconsin
6311. Trempealeau, County of, Wisconsin
6312. Two Rivers, City of, Wisconsin
6313. Vernon, County of, Wisconsin
6314. Verona, City of, Wisconsin
6315. Vilas, County of, Wisconsin
6316. Walworth, County of, Wisconsin
6317. Washburn, County of, Wisconsin
6318. Washington, County of, Wisconsin
6319. Watertown, City of, Wisconsin
6320. Waukesha, City of, Wisconsin
6321. Waukesha, County of, Wisconsin
6322. Waunakee, Village of, Wisconsin
6323. Waupaca, County of, Wisconsin
6324. Waupun, City of, Wisconsin
6325. Wausau, City of, Wisconsin
6326. Waushara, County of, Wisconsin
6327. Wauwatosa, City of, Wisconsin
6328. West Allis, City of, Wisconsin
6329. West Bend, City of, Wisconsin
6330. Weston, Village of, Wisconsin
6331. Whitefish Bay, Village of, Wisconsin
6332. Whitewater, City of, Wisconsin
6333. Winnebago, County of, Wisconsin
6334. Wisconsin Rapids, City of, Wisconsin
6335. Wood, County of, Wisconsin
6336. Albany, County of, Wyoming
6337. Big Horn, County of, Wyoming
6338. Campbell, County of, Wyoming
6339. Carbon, County of, Wyoming
6340. Casper, City of, Wyoming
6341. Cheyenne, City of, Wyoming
6342. Converse, County of, Wyoming
6343. Evanston, City of, Wyoming
6344. Fremont, County of, Wyoming
6345. Gillette, City of, Wyoming
6346. Goshen, County of, Wyoming
6347. Green River, City of, Wyoming
6348. Jackson, Town of, Wyoming
6349. Laramie, City of, Wyoming
6350. Laramie, County of, Wyoming
6351. Lincoln, County of, Wyoming
6352. Natrona, County of, Wyoming
6353. Park, County of, Wyoming
6354. Riverton, City of, Wyoming
6355. Rock Springs, City of, Wyoming
6356. Sheridan, City of, Wyoming
6357. Sheridan, County of, Wyoming
6358. Sweetwater, County of, Wyoming
6359. Teton, County of, Wyoming
6360. Uinta, County of, Wyoming

EXHIBIT J

Illustrative List of Released Entities

1. CVS Health Corporation
2. CVS Caremark Corporation
3. CVS/Caremark Corporation
4. CVS Corporation
5. CVS Pharmacy, Inc.
6. CVS, Inc.
7. CVS Distribution, Inc.
8. Mark Steven Service Merchandisers, Inc.
9. Mark Steven, Inc.
10. @Credentials Inc.
11. 103rd Avenue CVS, L.L.C.
12. 10th Ave Minneapolis CVS, L.L.C.
13. 115th Chicago CVS, L.L.C.
14. 131st Street CVS, L.L.C.
15. 1500 Lexington CVS, L.L.C.
16. 167th North Miami CVS, L.L.C.
17. 175 West Road Ellington, Inc.
18. 186th Miami CVS, L.L.C.
19. 18th and L Street CVS, Inc.
20. 25th Street CVS, Inc.
21. 26th Kostner CVS, L.L.C.
22. 27th Avenue CVS, Inc.
23. 295 Westport Ave. CVS, Inc.
24. 34th Street CVS, Inc.
25. 37th Minneapolis CVS, L.L.C.
26. 38th Street CVS, Inc.
27. 39th Independence CVS, Inc.
28. 419 West Main Street Pharmacy, Inc.
29. 41st Street CVS, Inc.
30. 42nd Minneapolis CVS, L.L.C.
31. 49th Hialeah CVS, L.L.C.
32. 4th Street NEC CVS, L.L.C.
33. 50th Street CVS, L.L.C.
34. 54th Western Chicago CVS, L.L.C.
35. 587 Boylston CVS, Inc.
36. 59th Ashland CVS, L.L.C.
37. 5th Street Perkasie CVS, Inc.
38. 6th NEC CVS, L.L.C.
39. 7 Mile CVS, Inc.
40. 711 Maple Road, Inc.
41. 74th Miami CVS, L.L.C.
42. 76th Stony Chicago CVS, L.L.C.
43. 79th Street CVS, L.L.C.
44. 7th Phoenix CVS, L.L.C.
45. 85th Ave CVS, L.L.C.
46. 87th Avenue CVS, L.L.C.
47. 8th Street CVS, L.L.C.
48. 976 MIAMI RE, L.L.C.
49. Aberdeen CVS, Inc.
50. Abington CVS, Inc.
51. Abrams Arlington CVS, L.P.
52. Absecon CVS, Inc.
53. Accendo Holding Company
54. Accendo Holding Company
55. Accendo Insurance Company
56. Accordant Common, L.L.C.
57. Accordant Health Services, Inc.
58. Accordant Health Services, L.L.C.
59. Accordant Integrated Services, Inc.
60. Accuscript MO, Inc.
61. Acme Hospital and Life Insurance Company
62. ACS ACQCO CORP.
63. ACS Primary Care Physicians-Midwest, S.C.
64. ACS Primary Care Physicians-New England, P.C.
65. ACS Primary Care Physicians-Northeast, P.C.
66. ACS Primary Care Physicians-Southeast, P.C.
67. ACS Primary Care Physicians-Southwest, P.A.
68. Active Health Management, Inc.

69. Acton Plaza CVS, Inc.
70. Acton Woods CVS, Inc.
71. Acushnet CVS, Inc.
72. Acute Care Medical Management, Inc.
73. Acute Care Physician's Network, Inc.
74. Acute Care Specialists, Inc.
75. Acute General Medical PLLC
76. Adams Drug Co. of Edgewood, Inc.
77. Addison Chicago CVS, L.L.C.
78. ADI Realty, Inc.
79. Admar, Inc.
80. Adminco, Inc.
81. Administrative Enterprises, Inc.
82. Admiral Douglas CVS, Inc.
83. ADS Health Management, Inc.
84. Advance Funding Corporation
85. Advance Paradigm, Inc.
86. Advanced Care Scripts, Inc.
87. Advanced Healthcare Distributors, L.L.C.
88. AdvancePCS
89. AdvancePCS Health Systems, LLC
90. AdvancePCS Health, LLC
91. AdvancePCS Health, LP
92. AdvancePCS Holding, L.L.C.
93. AdvancePCS Mail Services of Birmingham, Inc.
94. AdvancePCS Research, LLC
95. AdvancePCS SpecialtyRx, LLC
96. AdvancePCS, L.P.
97. AdvancePriority Specialty Rx, L.L.C.
98. AdvanceRx.com, L.L.C.
99. AdvanceRx.com, L.P.
100. Advantus Inc.
101. Advent Financial Services, Inc.
102. Advent Investments, Inc.
103. ADVP Consolidation, L.L.C.
104. ADVP Management, L.P.
105. ADVP Operations, L.P.
106. AE Eleven, Incorporation
107. AE Fifteen, Incorporated
108. AE Fourteen, Incorporated
109. AE Housing Corp.
110. Aelan Inc.
111. AET Health Care Plan of California, Inc.
112. AET Health Care Plan of Georgia, Inc.
113. AET Health Care Plan, Inc.
114. Aetna (Beijing) Enterprise Management Services Co., Ltd
115. Aetna (Shanghai) Enterprise Services Co., Ltd.
116. Aetna ACO Holdings Inc.
117. Aetna Affordable Housing, Inc.
118. Aetna Asset Advisors, LLC
119. Aetna Behavioral Health of Delaware, LLC
120. Aetna Behavioral Health, LLC
121. Aetna Better Health Inc.
122. Aetna Better Health Inc. (CT)
123. Aetna Better Health Inc. (GA)
124. Aetna Better Health Inc. (IL)
125. Aetna Better Health Inc. (NJ)
126. Aetna Better Health Inc. (NY)
127. Aetna Better Health Inc. (OH)
128. Aetna Better Health Inc. (PA)
129. Aetna Better Health LLC
130. Aetna Better Health of California Inc.
131. Aetna Better Health of Florida Inc.
132. Aetna Better Health of Illinois Inc.
133. Aetna Better Health of Indiana Inc.
134. Aetna Better Health of Iowa Inc.
135. Aetna Better Health of Kansas Inc.
136. Aetna Better Health of Kentucky Insurance Company
137. Aetna Better Health of Michigan Inc.
138. Aetna Better Health of Missouri LLC
139. Aetna Better Health of Nevada Inc.

140. Aetna Better Health of North Carolina Inc.
141. Aetna Better Health of Oklahoma Inc.
142. Aetna Better Health of Tennessee Inc.
143. Aetna Better Health of Texas Inc.
144. Aetna Better Health of Washington, Inc.
145. Aetna Better Health Premier Plan MMAI Inc.
146. Aetna Better Health, Inc. (LA)
147. Aetna Business Resources, Inc.
148. Aetna Capital Management, LLC
149. Aetna Card Solutions, LLC
150. Aetna Casualty Company
151. Aetna Corporate Services LLC
152. Aetna Criterion Communications, Inc.
153. Aetna Dental Care for Groups, Inc.
154. Aetna Dental Care of California, Inc.
155. Aetna Dental Care of Kentucky, Inc.
156. Aetna Dental Care of New Jersey, Inc.
157. Aetna Dental Care of Texas, Inc.
158. Aetna Dental Inc.
159. Aetna Dental Inc. (NJ)
160. Aetna Dental Inc. (TX)
161. Aetna Dental Maintenance Organization, Inc.
162. Aetna Dental of California Inc.
163. Aetna Familly Plans of Georgia Inc.
164. Aetna Family Plans of Ohio Inc.
165. Aetna Family Plans of Pennsylvania Inc.
166. Aetna Financial Holdings, LLC
167. Aetna Florida Inc.
168. Aetna Foundation, Inc.
169. Aetna Global Benefits (Asia Pacific) Limited
170. Aetna Global Benefits (Bahamas) Limited
171. Aetna Global Benefits (Bermuda) Limited
172. Aetna Global Benefits (Europe) Limited
173. Aetna Global Benefits (Middle East) LLC
174. Aetna Global Benefits (Middle East) LLC - Abu Dhabi Branch
175. Aetna Global Benefits (Singapore) PTE. LTD.
176. Aetna Global Benefits (UK) Limited
177. Aetna Global Benefits Administrators Inc.
178. Aetna Global Benefits Limited
179. Aetna Global Holdings Limited
180. Aetna Government Health Plans, Inc.
181. Aetna Government Health Plans, LLC
182. Aetna Health Administrators, LLC
183. Aetna Health and Life Insurance Company
184. Aetna Health Finance, Inc.
185. Aetna Health Holdings, LLC
186. Aetna Health Inc.
187. Aetna Health Inc. (CT)
188. Aetna Health Inc. (DE)
189. Aetna Health Inc. (FL)
190. Aetna Health Inc. (GA)
191. Aetna Health Inc. (IA)
192. Aetna Health Inc. (LA)
193. Aetna Health Inc. (ME)
194. Aetna Health Inc. (NJ)
195. Aetna Health Inc. (NY)
196. Aetna Health Inc. (PA)
197. Aetna Health Inc. (TX)
198. Aetna Health Information Solutions, Inc.
199. Aetna Health Insurance (Thailand) Public Company Limited

200. Aetna Health Insurance Company
201. Aetna Health Insurance Company of Connecticut
202. Aetna Health Insurance Company of Europe DAC
203. Aetna Health Insurance Company of New York
204. Aetna Health Management, Inc.
205. Aetna Health Management, LLC
206. Aetna Health of the Carolinas Inc.
207. Aetna Health of California Inc.
208. Aetna Health of Illinois Inc.
209. Aetna Health of Iowa Inc.
210. Aetna Health of Michigan Inc.
211. Aetna Health of North Texas Inc.
212. Aetna Health of Ohio Inc.
213. Aetna Health of Pennsylvania Inc.
214. Aetna Health of Utah Inc.
215. Aetna Health of Washington Inc.
216. Aetna Health Plans of Arizona, Inc.
217. Aetna Health Plans of California, Inc.
218. Aetna Health Plans of Central and Eastern Pennsylvania, Inc.
219. Aetna Health Plans of Florida, Inc.
220. Aetna Health Plans of Illinois, Inc.
221. Aetna Health Plans of Louisiana, Inc.
222. Aetna Health Plans of New Jersey, Inc.
223. Aetna Health Plans of New York, Inc.
224. Aetna Health Plans of North Texas, Inc.
225. Aetna Health Plans of Northern Ohio, Inc.
226. Aetna Health Plans of Ohio, Inc.
227. Aetna Health Plans of Phoenix, Inc.
228. Aetna Health Plans of Southern California
229. Aetna Health Plans of Southern New England, Inc.
230. Aetna Health Plans of Tennessee, Inc.
231. Aetna Health Plans of Texas, Inc.
232. Aetna Health Plans of the Carolinas, Inc.
233. Aetna Health Plans of the Mid-Atlantic, Inc.
234. Aetna Health Services (Middle East) FZ-LLC
235. Aetna Health Services (UK) Limited
236. Aetna Health Services of Phoenix, Inc.
237. Aetna HealthAssurance Pennsylvania, Inc.
238. Aetna Healthcare Programs, Inc.
239. Aetna Holdco (UK) Limited
240. Aetna Holdings (Thailand) Limited
241. Aetna Home Delivery, LLC
242. Aetna Inc.
243. Aetna Insurance (Singapore) PTE. LTD.
244. Aetna Insurance Company Limited
245. Aetna Insurance Company of Connecticut
246. Aetna Integrated Informatics, Inc.
247. Aetna InteliHealth Inc.
248. Aetna International Ex Pat LLC
249. Aetna International Inc.
250. Aetna International LLC
251. Aetna Ireland Inc.
252. Aetna Ireland, LLC
253. Aetna Korea Ltd.
254. Aetna Life & Casualty (Bermuda) Ltd.
255. Aetna Life Assignment Company
256. Aetna Life Insurance Company
257. Aetna Life Insurance Company of Illinois
258. Aetna Life Insurance Company Shanghai Representative Office
259. Aetna Medicaid Administrators LLC

260. Aetna Mortgage Investments I, Inc.
261. Aetna Multi-Strategy 1099 Fund
262. Aetna Multi-Strategy 1099 Fund, LLC
263. Aetna Network Services LLC
264. Aetna Partners Diversified Fund (Cayman), Limited
265. Aetna Partners Diversified Fund, LLC
266. Aetna Pharmacy Management Services LLC
267. Aetna Provider Solutions, LLC
268. Aetna Real Estate Properties, Inc.
269. Aetna Resources LLC
270. Aetna Risk Assurance Company of Connecticut Inc.
271. Aetna Risk Indemnity Company, Ltd.
272. Aetna Rx Home Delivery, LLC
273. Aetna Specialty Pharmacy, LLC
274. Aetna Student Health Agency Inc.
275. Aetna U.S. Healthcare Dental Plan Inc.
276. Aetna U.S. Healthcare Dental Plan of California Inc
277. Aetna U.S. Healthcare Holdings, Inc.
278. Aetna U.S. Healthcare Inc.
279. Aetna U.S. Healthcare Inc. (DE)
280. Aetna U.S. Healthcare of Alabama, Inc.
281. Aetna U.S. Healthcare of California Inc.
282. Aetna U.S. Healthcare of Colorado, Inc.
283. Aetna U.S. Healthcare of Georgia, Inc.
284. Aetna U.S. Healthcare of Illinois Inc.
285. Aetna U.S. Healthcare of North Texas Inc.
286. Aetna U.S. Healthcare of the Carolinas Inc.
287. Aetna U.S. Healthcare, Inc. (Michigan)
288. Aetna Ventures, LLC
289. Aetna Workers' Comp Access, LLC
290. Aetna/AREA Corporation
291. AFC Receivables Holding Corporation
292. AHP Holdings, Inc.
293. Airport Boulevard CVS, L.P.
294. Akron Cuyahoga CVS, Inc.
295. Alabama CVS Pharmacy, L.L.C.
296. Alabama Road CVS, Inc.
297. Alajasper Realty Services, Inc.
298. Alajasper Realty Services, L.L.C.
299. Alaska CVS Pharmacy, L.L.C.
300. Albany CVS, Inc.
301. Albany New Scotland CVS, L.L.C.
302. Albemarle CVS, Inc.
303. Alexander Baytown CVS, L.P.
304. Alexander Durham CVS, Inc.
305. Alexandria Duke CVS, Inc.
306. Algonquin CVS, L.L.C.
307. Alicia Mission Viejo CVS, L.L.C.
308. Aliso Creek CVS, L.L.C.
309. Allen CVS, Inc.
310. Allen Main TX CVS, L.L.C.
311. Allen Texas CVS, L.P.
312. Allentown CVS, Inc.
313. Allentown Village CVS, Inc.
314. Alliance Family Centers, Inc.
315. Allina Health and Aetna Health Plan Inc.
316. Allina Health and Aetna Insurance Company
317. Allina Health and Aetna Insurance Holding Company LLC
318. Allston Commonwealth CVS, Inc.
319. Allston Retailer, Inc.
320. Allviant Corporation
321. Almadea Burbank CVS, Inc.
322. Almond Ave CVS, L.L.C.
323. Almshouse CVS, Inc.
324. Aloma Winter Park CVS, L.L.C.

325. Alpharetta CVS, Inc
326. Alta Health Strategies, Inc.
327. Alta Mere Fort Worth CVS, L.P.
328. Alta Mesa McCart CVS, L.P.
329. Altamonte Springs CVS, L.L.C.
330. Altius Health Plans Inc.
331. AMC - New York, Inc.
332. AMC - Tennessee, Inc.
333. AMC-New York, LLC
334. AMC-Tennessee, LLC
335. American Continental Insurance Company
336. American Drug Stores Delaware, L.L.C.
337. American Drug Stores, Inc. d/b/a Osco Drug, Inc. (for assets / pharmacies acquired by CVS)
338. American Health Holding, Inc.
339. American Service Life Insurance Company
340. Ames Plaza CVS, Inc.
341. Amesbury CVS, Inc.
342. Amherst Academia CVS, Inc.
343. Amherst CVS Store, Inc.
344. Amsterdam Mall CVS Store, Inc.
345. Anac Holding Corporation
346. Anaheim Hills CVS, Inc.
347. Ancillary Care Management, Inc.
348. Anderson CVS, Inc.
349. Anderson House CVS, Inc.
350. Andover CVS, Inc.
351. Angelini Ave. CVS, Inc.
352. Angell Street CVS, Inc.
353. Anita Street CVS, L.L.C.
354. Ann Mary Street CVS, Inc.
355. Annapolis CVS, Inc.
356. Annapolis Riva CVS, Inc.
357. Anoka MN CVS, L.L.C.
358. Anthem AZ CVS, L.L.C.
359. Antoine Houston CVS, L.P.
360. API Properties 808 LLC
361. Apollo Beach CVS, L.L.C.
362. Apopka CVS, Inc.
363. APP Hedge Funds, LLC
364. Apple Valley MN CVS, L.L.C.
365. Apria Finance Holdings Inc.
366. APS Acquisition LLC
367. APS Enterprises Holding Company, Inc.
368. APS-Summit Care Pharmacy, L.L.C.
369. Aquia Harbor CVS, Inc.
370. Aquidneck Drug CVS, Inc.
371. Aramingo Avenue CVS, Inc.
372. Arbor Drugs - Civic, Inc.
373. Arbor Drugs - Civic, Inc.
374. Arbor Drugs of Ann Arbor, Inc.
375. Arbor Drugs of East Detroit, Inc.
376. Arbor Drugs of Inkster, Inc.
377. Arbor Drugs of Livonia, Inc.
378. Arbor Drugs of Merriman, Inc.
379. Arbor Drugs of Milford, Inc.
380. Arbor Drugs of Northville, Inc.
381. Arbor Drugs of Redford, Inc.
382. Arbor Drugs of Saline, Inc.
383. Arbor Drugs of Walled Lake, Inc.
384. Arbor Drugs of Westland, Inc.
385. Arbor Drugs, Inc.
386. Arbor Drugs, Inc.
387. ARC RetailCare, PLLC
388. Archer Oak CVS, L.L.C.
389. ARCP CV Bowling Green OH, LLC
390. ARCP CV Claremore OK, LLC
391. ARCP CV Duncan OK, LLC
392. ARCP CV Durant OK, LLC
393. ARCP CV Enid OK, LLC
394. ARCP CV Enterprise AL, LLC
395. ARCP CV Erwin NC, LLC
396. ARCP CV Green OH, LLC
397. ARCP CV Greeneville TN, LLC
398. ARCP CV Ironton OH, LLC
399. ARCP CV Knoxville (Kingston) TN, LLC
400. ARCP CV Lawrence MA, LLC
401. ARCP CV Lewes DE, LLC

402. ARCP CV Liberty SC, LLC
403. ARCP CV Macon GA, LLC
404. ARCP CV Manchester GA, LLC
405. ARCP CV Morgantown WV, LLC
406. ARCP CV Muskogee OK, LLC
407. ARCP CV Norfolk NE, LLC
408. ARCP CV Oklahoma City (Pennsylvania) OK, LLC
409. ARCP CV Portsmouth (High) VA, LLC
410. ARCP CV Sanford NC, LLC
411. ARCP CV Toledo OH, LLC
412. Ardmore CVS, Inc.
413. Argonne Avenue CVS, Inc.
414. Arizona Acquisition Corporation
415. Arizona CVS Stores, L.L.C.
416. Arkansas CVS Pharmacy, L.L.C.
417. Arleta CVS, Inc.
418. Arlington 10th Street CVS, Inc.
419. Arlington CVS, Inc.
420. Arlington Pentagon CVS, Inc.
421. Arlington Peoples, Inc.
422. Arlington South Eads CVS, Inc.
423. Arlington-Walter Reed CVS, Inc.
424. Armcal Chicago CVS, L.L.C.
425. Armitage CVS, L.L.C.
426. Army Trail Bartlett CVS, L.L.C.
427. Arrow Glendora CVS, L.P.
428. Arsenal CVS, Inc.
429. ARV LLC
430. Asbury Evanston CVS, L.L.C.
431. ASCO Healthcare of New England Limited Partnership
432. ASCO Healthcare of New England, LLC
433. ASCO HealthCare, LLC
434. Ashburn Parkway CVS, Inc.
435. Ashford Dunwoody CVS, Inc.
436. Ashland Chicago CVS, L.L.C.
437. Ashland CVS, Inc.
438. ASI Wings, LLC
439. Assembly Square CVS, Inc.
440. Assurance Company of Connecticut
441. Aston Township CVS, Inc.
442. Astoria NY CVS, L.L.C.
443. Atlanta Bell Isle CVS, Inc.
444. Atlanta Brookwood Village CVS, Inc.
445. Atlanta Peachtree CVS, Inc.
446. Atlanta ProCare Pharmacy, Inc.
447. Atlanta Ridge CVS, Inc.
448. Atlantic Blvd CVS, Inc.
449. Atlantic City CVS, Inc.
450. Atlantic Jacksonville CVS, L.L.C.
451. Atlantic Jog Delray CVS, L.L.C.
452. Atlantic Medical Group, LLC
453. Atlee CVS, Inc.
454. Attleboro CVS, Inc.
455. Attleboro Pleasant CVS, Inc.
456. Atwood Avenue CVS, Inc.
457. Auburn AL CVS, Inc.
458. Auburn Clinton Stores,Inc.
459. Auburn CVS, Inc.
460. Auburn Glen CVS, Inc.
461. Auburn Mall (Me.) CVS, Inc.
462. Auburn PharmaCare Pharmacy, Inc.
463. Augusta Belair CVS, Inc.
464. Augusta Dr CVS, L.L.C.
465. AUSHC Holdings, Inc.
466. Austell Road CVS, Inc.
467. Austin Drug Co., Inc.
468. Austin Drugs of East Meadow, Inc.
469. Austin Drugs of Hicksville, Inc.
470. Austin Drugs of Lawrence, Inc.
471. Austin Drugs of Syosset, Inc.
472. Avenue 18 CVS, Inc.
473. Avenue of Americas CVS, L.L.C.
474. Avenue P Brooklyn CVS, Inc.
475. Aversboro Road CVS, Inc.
476. Avery Ranch CVS, L.L.C.
477. AV-Med of Louisiana, Inc.
478. Avon CVS, Inc.
479. Avon OH CVS, Inc.
480. Azalea Mall, L.L.C.
481. Azusa Avenue CVS, Inc.
482. Azusa CVS, L.P.

483. B.H. Krueger, Inc.
484. Back Bay CVS, Inc.
485. Badger Acquisition LLC
486. Badger Acquisition of Kentucky LLC
487. Badger Acquisition of Minnesota LLC
488. Badger Acquisition of Ohio LLC
489. Bailey Avenue CVS Store, Inc.
490. Baker Avenue CVS, Inc.
491. Ball Square CVS, Inc.
492. Ballantyne Commons CVS, Inc.
493. Ballston Spa CVS, L.L.C.
494. Baltimore Avenue CVS, Inc.
495. Baltimore Belair CVS, Inc.
496. Baltimore CVS, Inc.
497. Bangor Route 512 CVS, Inc.
498. Bangor, Penna., CVS, Inc.
499. Banner Health and Aetna Health Insurance Company
500. Banner Health and Aetna Health Insurance Holding Company LLC
501. Banner Health and Aetna Health Plan Inc.
502. Barberton CVS, Inc.
503. Barker Houston CVS, L.P.
504. Barkley CVS, Inc.
505. Barnstable Retailer, Inc.
506. Barrington CVS, Inc.
507. Bartlett CVS, L.L.C.
508. Baseline 35th CVS, L.L.C.
509. Baseline Phoenix CVS, L.L.C.
510. Bass Fort Worth CVS, L.P.
511. Baton Rouge Perkins CVS, Inc.
512. Battleground Avenue CVS, L.L.C.
513. Baumel Eisner Neuromedical Institute, L.L.C.
514. Bay City Clinton Stores, Inc.
515. Bay Village CVS, Inc.
516. Bayamon Oeste Chess King, Inc.
517. Bayonne CVS, Inc.
518. Bayou La Batre CVS, Inc.
519. Beach Anaheim CVS, L.P.
520. Beach Buena Park CVS, L.P.
521. Beach Lincoln CVS, L.L.C.
522. Beacon Retailer, Inc.
523. Bear Merger Subsidiary, LLC
524. Bearss Avenue CVS, Inc.
525. Beaumont TX CVS, L.L.C.
526. Beauty Holdings, L.L.C.
527. Bedford Great Road CVS, Inc.
528. Bedford Retailer, Inc.
529. Bedford TX CVS, L.P.
530. Beechnut CVS, L.P.
531. Beechnut Gessner CVS, L.P.
532. Beechnut Houston CVS, L.P.
533. Bel Air CVS, Inc.
534. Bel Air Maryland CVS, Inc.
535. Belchertown CVS, Inc.
536. Bell Plaza CVS, Inc.
537. Bell Square CVS, Inc.
538. Bellaire Cook CVS, L.P.
539. Bellaire Ft. Worth CVS, L.P.
540. Belleville CVS, Inc.
541. Bellevue CVS, Inc.
542. Bellingham CVS, Inc.
543. Bellport CVS, Inc.
544. Belmont Ave. CVS, Inc.
545. Belmont Chicago CVS, L.L.C.
546. Belpre CVS, Inc.
547. Beltsville CVS, Inc.
548. Beltway 8 CVS, L.P.
549. Benchmark Physicians, Inc.
550. Benignus Houston CVS, L.P.
551. Bennington CVS, Inc.
552. Bensalem CVS, Inc.
553. Bentana Technologies, Inc.
554. Bergen Mall (N.J.) CVS, Inc.
555. Bergen Ridgefield CVS, Inc.
556. Berkeley PharmaCare Pharmacy, L.L.C.
557. Berlin CVS, Inc.
558. Bernville PA CVS, Inc.
559. Berwick Market CVS, Inc.
560. Berwyn PA CVS, Inc.
561. Beryl Street CVS, Inc.

562. Best Care LTC Acquisition Company LLC
563. Bethany Glendale CVS, L.L.C.
564. Bethel Church Road CVS, Inc.
565. Bethel Clinic Family Health Plan Corporation
566. Bethel CVS, Inc.
567. Bethel Drive CVS, Inc.
568. Bethel OH CVS, L.L.C.
569. Bethesda CVS, Inc.
570. Bethesda Peoples, Inc.
571. Bethlehem Broad St. CVS, Inc.
572. Bethlehem Plaza CVS, Inc.
573. Bethlehem West Fourth CVS, Inc.
574. Beverly Cove CVS, Inc.
575. Beverly CVS, Inc.
576. Big B Drugs, Inc.
577. Big B Express, Inc.
578. Big B, Inc.
579. Billerica CVS, Inc.
580. Binghamton Clinton Stores, Inc.
581. Birmingham AL CVS, Inc.
582. Bissonnet Houston CVS, L.P.
583. Black Rock Turnpike CVS, Inc.
584. Blackstone CVS, Inc.
585. Blackstone Insurance Group, Inc.
586. Blaine MN CVS, L.L.C.
587. Blakeslee CVS, Inc.
588. Blalock & Hammerly CVS, L.P.
589. Bloomfield Avenue CVS, Inc.
590. Bloomfield CVS, Inc.
591. Bloomingdale Brandon CVS, L.L.C.
592. Bloomington CVS, L.L.C.
593. Bloomsburg CVS, Inc.
594. BLS Properties, L.L.C.
595. Blue Hill Avenue CVS, Inc.
596. Blue Ridge CVS, L.L.C.
597. Blue Ridge Road CVS, Inc.
598. Bluegrass Pharmacy of Lexington, LLC
599. Boca Raton CVS, Inc.
600. Bolingbrook IL CVS, L.L.C.
601. Bonita Beach CVS, L.L.C.
602. Borden Pharmacy, Inc.
603. Bordentown CVS, Inc.
604. Borough of Hatboro CVS, Inc.
605. Boston Chelmsford CVS, Inc.
606. Boston Hanover CVS, Inc.
607. Boston Jamaica Plain CVS, Inc.
608. Boston Saratoga CVS, Inc.
609. Boston Washington CVS, Inc.
610. Boston, Ma., CVS, Inc.
611. Boston-Milk St. CVS, Inc.
612. Bourbonaise CVS, L.L.C.
613. Bourne MA CVS, Inc.
614. Bowling Green CVS, L.L.C.
615. Bowman Street CVS, Inc.
616. Boyertown CVS, Inc.
617. Boynton Beach CVS, Inc.
618. BPC Equity, Inc.
619. BPC Equity, LLC
620. BPNY Acquisition Corp
621. Bradenton CVS, L.L.C.
622. Bradenton SR 70 CVS, L.L.C.
623. Bradley NEC CVS, L.L.C.
624. Braintree CVS, Inc.
625. Braintree Washington CVS, Inc.
626. Brandon CVS, Inc.
627. Branford CVS, Inc.
628. Branhaven CVS, Inc.
629. Braselton CVS, Inc.
630. Brea Mall CVS, Inc.
631. Bremner Boulevard CVS, Inc.
632. Brewster CVS, L.L.C.
633. Briarwood CVS, Inc.
634. Brick New Jersey CVS, Inc.
635. Bridge Campus CVS, L.L.C.
636. Bridge Street CVS, L.L.C.
637. Bridgeport Avenue CVS, Inc.
638. Bridgeport Boston Ave. CVS, Inc.
639. Bridgeport-Merritt CVS, Inc.
640. Bridgeview CVS, L.L.C.
641. Bridgewater Commons CVS, Inc.
642. Bridgewater Main Street CVS, Inc.
643. Bridgewater Store Corporation

644. Brighton Market St. CVS, Inc.
645. Bristol Bay CVS, Inc.
646. Bristol CVS, Inc.
647. Bristol Farmington CVS, Inc.
648. Bristol North Main CVS, Inc.
649. Bristol Plaza CVS, Inc.
650. Brittain Road CVS, Inc.
651. Brittany Square CVS, Inc.
652. Broadheadsville CVS, Inc.
653. Broadspire National Services, Inc.
654. Broadway Fairlawn CVS, L.L.C.
655. Broadway Hewlett CVS, L.L.C.
656. Broadway Houston CVS, L.P.
657. Broadway Lawrence CVS, L.L.C.
658. Broadway Maricopa CVS, L.L.C.
659. Broadway Minneapolis CVS, L.L.C.
660. Broadway New York CVS, Inc.
661. Broadway Palm Beach CVS, L.L.C.
662. Brockton Belmont CVS, Inc.
663. Brockton Carey Hill CVS, Inc.
664. Brockton Crescent CVS, Inc.
665. Brockton CVS, Inc.
666. Brockton Hayward CVS, Inc.
667. Brockton Oak CVS, Inc.
668. Brockton Pleasant CVS, Inc.
669. Brockton West Plaza CVS, Inc.
670. Bronx Bainbridge CVS, L.L.C.
671. Bronx River CVS, Inc.
672. Brookfield CVS, Inc.
673. Brookfield IL CVS, L.L.C.
674. Brookhaven Hilltop CVS, Inc.
675. Brookline CVS, Inc.
676. Brookline Village CVS, Inc.
677. Brooklyn 9th Street CVS, Inc.
678. Brooklyn Bass CVS, L.L.C.
679. Brooklyn Commons CVS, Inc.
680. Brooklyn NY CVS, L.L.C.
681. Brooklyn Park MN CVS, L.L.C.
682. Brooklyn Pennsylvania CVS, Inc.
683. Brooklyn Rockaway CVS, Inc.
684. Brooks Drug of Ipswich, Inc.
685. Brooks Drug, Inc.
686. Broomall CVS, Inc.
687. Brown Recker CVS, L.L.C.
688. Brown Street CVS, Inc.
689. Browns Covington CVS, Inc.
690. Browns Mills CVS, L.L.C.
691. Brownstown Twp CVS, L.L.C.
692. Bruin Acquisition Co., Inc.
693. Brunswick (Me.) CVS, Inc.
694. Brunswick CVS, Inc.
695. Brunswick Square CVS, Inc.
696. Bryans Road CVS, Inc.
697. Bryans Road Peoples, Inc.
698. bswift LLC
699. bswift Resources LLC
700. Buckeye AZ CVS, L.L.C.
701. Buckland Hills CVS, Inc.
702. Bud's Price King, Inc.
703. Buffalo Grove CVS, L.L.C.
704. Buford Highway CVS, Inc.
705. Bunker Hill CVS, Inc.
706. Bunker Lake CVS, L.L.C.
707. Bupa Health Insurance (Thailand) Public Company Limited
708. Burlington Cambridge CVS, Inc.
709. Burlington Center (N.J.) CVS, Inc.
710. Burlington CVS, Inc.
711. Burnsville CVS, L.L.C.
712. Burnsville MN CVS, L.L.C.
713. Busch CVS, Inc.
714. Bush River CVS, Inc.
715. Busse CVS, L.L.C.
716. Bustleton Nursery CVS, Inc.
717. Bustleton Philadelphia CVS, Inc.
718. Butler Road CVS, Inc.
719. Byron Center CVS, L.L.C.
720. C Street CVS, Inc.
721. C Street Peoples, Inc.
722. Cactus 83rd CVS, L.L.C.
723. Cactus Las Vegas CVS, L.L.C.
724. Cactus Peoria CVS, L.L.C.
725. California CVS Pharmacy, L.L.C.
726. Cambria Heights CVS, L.L.C.
727. Cambridge Alewife CVS, Inc.

728. Cambridge Burlington CVS, Inc.
729. Cambridge CVS, Inc.
730. Cambridge Galleria CVS, Inc.
731. Cambridge Life Insurance Company
732. Cambridge Street CVS, Inc.
733. Camden NJ CVS, Inc.
734. Camillus Plaza CVS Store, Inc.
735. Camino Real CVS, Inc.
736. Camp Hill CVS, Inc.
737. Campbell Richardson CVS, L.P.
738. Campo's Medical Pharmacy, Inc.
739. Campo's Medical Pharmacy, LLC
740. Canal CVS, Inc.
741. Canal Place, LLC
742. Canal Salem CVS, Inc.
743. Canal Winchester CVS, Inc.
744. Canoga Park CVS, Inc.
745. Canopy Acquisition, LLC
746. Canton CVS, Inc.
747. Canton GA CVS, Inc.
748. Canton Highway CVS, Inc.
749. Cantonment FL CVS, L.L.C.
750. Cape Coral CVS, L.L.C.
751. Cape May CVS, Inc.
752. Capital Market CVS, Inc.
753. Capitol Heights CVS, L.L.C.
754. Capitol Home Infusion, Inc.
755. Care Pharmaceutical Services, LP
756. Care4, L.P.
757. CareCenter Pharmacy, L.L.C.
758. CareFlorida Health Plan, Inc.
759. Carefree Insurance Services, Inc.
760. Carelink Health Plans, Inc.
761. Caremark Advantage, Inc.
762. Caremark Advantage, L.L.C.
763. Caremark Arizona Mail Pharmacy Holding, LLC
764. Caremark Arizona Mail Pharmacy, LLC
765. Caremark Arizona Specialty Pharmacy Holding, L.L.C.
766. Caremark Arizona Specialty Pharmacy, L.L.C.
767. Caremark Atlanta Pharmacy, LLC
768. Caremark Aviation, L.L.C.
769. Caremark Baltimore Pharmacy, LLC
770. Caremark California Specialty Pharmacy Holding, L.L.C.
771. Caremark California Specialty Pharmacy, L.L.C.
772. Caremark CareCenter Pharmacy, L.L.C.
773. Caremark Chicago Pharmacy, LLC
774. Caremark Connecticut CareCenter Pharmacy Holding, LLC
775. Caremark Connecticut CareCenter Pharmacy, LLC
776. Caremark Dallas Pharmacy, LLC
777. Caremark Detroit Pharmacy, LLC
778. Caremark Florida Mail Pharmacy Holding, LLC
779. Caremark Florida Mail Pharmacy, LLC
780. Caremark Florida Speciality Pharmacy Holding, LLC
781. Caremark Florida Specialty Pharmacy, LLC
782. Caremark Fort Lauderdale Pharmacy, LLC
783. Caremark Georgia CareCenter Pharmacy Holding, LLC
784. Caremark Georgia CareCenter Pharmacy, LLC
785. Caremark Georgia Specialty Pharmacy Holding, LLC
786. Caremark Georgia Specialty Pharmacy, LLC
787. Caremark Global, Inc.
788. Caremark Hawaii Mail Pharmacy Holding, L.L.C.
789. Caremark Hawaii Mail Pharmacy, LLC

790. Caremark Hawaii Specialty Pharmacy Holding, LLC
791. Caremark Hawaii Specialty Pharmacy, LLC
792. Caremark Homecare, Inc.
793. Caremark Honolulu Pharmacy, LLC
794. Caremark Illinois CareCenter Pharmacy Holding I, LLC
795. Caremark Illinois CareCenter Pharmacy Holding II, LLC
796. Caremark Illinois CareCenter Pharmacy Holding, LLC
797. Caremark Illinois CareCenter Pharmacy I, LLC
798. Caremark Illinois CareCenter Pharmacy II, LLC
799. Caremark Illinois CareCenter Pharmacy, LLC
800. Caremark Illinois Mail Pharmacy Holding, LLC
801. Caremark Illinois Mail Pharmacy, LLC
802. Caremark Illinois Specialty Pharmacy Holding, LLC
803. Caremark Illinois Specialty Pharmacy, LLC
804. Caremark Indemnity, Ltd.
805. Caremark International, Inc.
806. Caremark International, L.L.C.
807. Caremark Iowa CareCenter Pharmacy Holding I, LLC
808. Caremark Iowa CareCenter Pharmacy Holding, LLC
809. Caremark Iowa CareCenter Pharmacy I, LLC
810. Caremark Iowa CareCenter Pharmacy, LLC
811. Caremark IPA, L.L.C.
812. Caremark Irving Resource Center Holding, LLC
813. Caremark Irving Resource Center, LLC
814. Caremark Kansas Specialty Pharmacy Holding, LLC
815. Caremark Kansas Specialty Pharmacy, LLC
816. Caremark Limited, LLC
817. Caremark Logistics Holding, LLC
818. Caremark Logistics, LLC
819. Caremark Louisiana Specialty Pharmacy Holding, LLC
820. Caremark Louisiana Specialty Pharmacy, LLC
821. Caremark Mail Pharmacy, LLC
822. Caremark Management Limited, LLC
823. Caremark Management, L.L.C.
824. Caremark Management, LP
825. Caremark Maryland CareCenter Pharmacy Holding, LLC
826. Caremark Maryland CareCenter Pharmacy, LLC
827. Caremark Maryland Specialty Pharmacy Holding, LLC
828. Caremark Maryland Specialty Pharmacy, LLC
829. Caremark Massachusetts Specialty Pharmacy Holding, LLC
830. Caremark Massachusetts Specialty Pharmacy, LLC
831. Caremark MergerSub, L.L.C.
832. Caremark Michigan Specialty Pharmacy Holding, LLC
833. Caremark Michigan Specialty Pharmacy, LLC
834. Caremark Minnesota Specialty Pharmacy Holding, LLC
835. Caremark Minnesota Specialty Pharmacy, LLC
836. Caremark Miramar Pharmacy, LLC
837. Caremark New Jersey CareCenter Pharmacy Holding, LLC
838. Caremark New Jersey CareCenter Pharmacy, LLC

839. Caremark New Jersey Specialty Pharmacy Holding, LLC
840. Caremark New Jersey Specialty Pharmacy, LLC
841. Caremark North Carolina CareCenter Pharmacy Holding, LLC
842. Caremark North Carolina CareCenter Pharmacy, LLC
843. Caremark North Carolina Specialty Pharmacy Holding LLC
844. Caremark North Carolina Specialty Pharmacy, LLC
845. Caremark Ohio CareCenter Pharmacy Holding, LLC
846. Caremark Ohio CareCenter Pharmacy, LLC
847. Caremark Ohio Specialty Pharmacy Holding, L.L.C.
848. Caremark Ohio Specialty Pharmacy, L.L.C.
849. Caremark Onsite Pharmacy, Inc.
850. Caremark Pennsylvania Specialty Pharmacy Holding, LLC
851. Caremark Pennsylvania Specialty Pharmacy, LLC
852. Caremark Pharmacy, L.L.C.
853. Caremark PhC, L.L.C.
854. Caremark Phoenix Pharmacy, LLC
855. Caremark Pittsburgh Pharmacy, LLC
856. Caremark Procurement Corporation
857. Caremark Procurement, L.L.C.
858. Caremark Puerto Rico Holding LLC
859. Caremark Puerto Rico L.L.C.
860. Caremark Puerto Rico Specialty Pharmacy Holding LLC
861. Caremark Puerto Rico Specialty Pharmacy L.L.C.
862. Caremark Puerto Rico, Inc.
863. Caremark Raleigh Pharmacy, LLC
864. Caremark Receivable, LLC
865. Caremark Redlands Pharmacy, L.L.C.
866. Caremark Repack, LLC
867. Caremark Resource Center General, LLC
868. Caremark Rx, Inc.
869. Caremark Rx, L.L.C.
870. Caremark San Antonio Pharmacy, LLC
871. Caremark San Antonio Resource Center Holding, LLC
872. Caremark San Antonio Resource Center, LLC
873. Caremark Specialty Pharmacy, LLC
874. Caremark Tampa Pharmacy, LLC
875. Caremark Tennessee CareCenter Pharmacy Holding, LLC
876. Caremark Tennessee CareCenter Pharmacy, LLC
877. Caremark Tennessee Specialty Pharmacy Holding, LLC
878. Caremark Tennessee Specialty Pharmacy, LLC
879. Caremark Texas Mail Pharmacy Holding, LLC
880. Caremark Texas Mail Pharmacy, LLC
881. Caremark Texas Specialty Pharmacy, LLC
882. Caremark Ulysses Holding Corp.
883. Caremark Washington Specialty Pharmacy Holding, LLC
884. Caremark Washington Specialty Pharmacy, LLC
885. Caremark, L.L.C.
886. Caremark, LP
887. CaremarkPCS
888. CaremarkPCS Alabama Mail Pharmacy Holding, LLC
889. CaremarkPCS Alabama Mail Pharmacy, LLC
890. CaremarkPCS Caribbean, Inc.
891. CaremarkPCS Health Systems, LLC

892. CaremarkPCS Health, LLC
893. CaremarkPCS Health, LP
894. CaremarkPCS Mail Pharmacy, LLC
895. CaremarkPCS Pennsylvania Mail Pharmacy Holding, LLC
896. CaremarkPCS Pennsylvania Mail Pharmacy, LLC
897. CaremarkPCS Texas Mail Pharmacy Holding, LLC
898. CaremarkPCS Texas Mail Pharmacy, LLC
899. CaremarkPCS, L.L.C.
900. Carney CVS, Inc.
901. Carol Stream IL CVS, L.L.C.
902. Carrabile, LLC
903. Carroll Denton CVS, L.P.
904. Carroll Street CVS, Inc.
905. Carrollton CVS, L.P.
906. Carson CA CVS, L.L.C.
907. Carver CVS, Inc.
908. Cary Tryon CVS, Inc.
909. Cascades CVS, Inc.
910. Cashmere St. Lucie CVS, L.L.C.
911. Cass Darien CVS, L.L.C.
912. Castor Avenue CVS, Inc.
913. Castro Street ProCare Pharmacy, Inc.
914. Catalpa Chicago CVS, L.L.C.
915. Cathedral City CVS, L.L.C.
916. Caton Farm Joliet CVS, L.L.C.
917. CC Advertising & Marketing, LLC
918. CCI Foreign Holdings, Sarl
919. CCI Foreign, Sarl
920. CCRx Holdings, LLC
921. CCRx of North Carolina Holdings, LLC
922. CCRx of North Carolina, LLC
923. Cedar Garwood CVS, L.L.C.
924. Cedar Park CVS, Inc.
925. Cedar Park Peoples, Inc.
926. Center City CVS, Inc.
927. Center Moriches CVS, Inc.
928. Center Pasadena CVS, L.P.
929. Center Plaza CVS, Inc.
930. Center Square CVS, Inc.
931. Centerville Falmouth St. CVS, Inc.
932. Central Ave SEC CVS, L.L.C.
933. Central City Mall CVS, Inc.
934. Central Rx Services, LLC
935. Central Square CVS, Inc.
936. Central St. Petersburg CVS, L.L.C.
937. Central Street CVS, Inc.
938. Centreville Road CVS, Inc.
939. CH Saluda SC 2008, LLC
940. Chandler AZ CVS, L.L.C.
941. Chandler Dobson CVS, L.L.C.
942. Chandler Gilbert CVS, L.L.C.
943. Chandler Heights CVS, L.L.C.
944. Chandler Kyrene CVS, L.L.C.
945. Chandler North CVS, L.L.C.
946. Chandler Street CVS, Inc.
947. Chandler Warner CVS, L.L.C.
948. Chanhassen CVS, L.L.C.
949. Chapman Avenue CVS, Inc.
950. Chappaqua CVS, L.L.C.
951. Charles Street Baltimore CVS, Inc.
952. Charles Street CVS, Inc.
953. Charleston Area Health Plan, Inc.
954. Charlie Acquisition Corporation
955. Charlott Street CVS, Inc.
956. Charlotte NC CVS, Inc.
957. Charlotte PUD, LLC
958. Charlton MA CVS, Inc.
959. Charlton PharmaCare Pharmacy, Inc.
960. Chatham CVS, Inc.
961. Chatham Main St. CVS, Inc.
962. Chatsworth CVS, L.L.C.
963. CHC Casualty Risk Retention Group, Inc.
964. CHCCares, Inc.
965. Cheektowaga-Como CVS, Inc.
966. Chelsea AL CVS, Inc.
967. Cheltenham CVS, Inc.
968. Cherry Hill C.K. Jeanery, Inc.
969. Cherry Tree Lane CVS, Inc.

970. Cheshire CVS, Inc.
971. Chester MD CVS, L.L.C.
972. Chester NY CVS, L.L.C.
973. Chesterfield CVS, Inc.
974. Chestnut Hill CVS, Inc.
975. Chestnut Montvale CVS, L.L.C.
976. Chestnut St. CVS, Inc.
977. Chestnut Street CVS, Inc.
978. Chicago CVS Store, L.L.C.
979. Chicago Heights IL CVS, L.L.C.
980. Chicago North Central CVS, L.L.C.
981. Chicago Pulaski CVS, L.L.C.
982. Chicago Ridge IL CVS, L.L.C.
983. Chicago West Irving Park CVS, L.L.C.
984. Chichester CVS, Inc.
985. Chick Springs CVS, Inc.
986. Chickering Benefit Planning Insurance Agency, Inc.
987. Chickering Claims Administrators, Inc.
988. Chicopee CVS, Inc.
989. Chicopee Exchange Street CVS, Inc.
990. Chicopee Memorial CVS, Inc.
991. Children's Hospital of Michigan Outpatient Pharmacy, Inc.
992. Chili CVS, Inc.
993. Chimney Rock CVS, L.P.
994. China Town CVS, Inc.
995. Chino Ave SEC CVS, L.L.C.
996. Chino Hills CVS, INc.
997. Choice Source Therapeutic of Houston, Texas, L.L.C.
998. Choice Source Therapeutic South, L.L.C.
999. Choice Source, L.L.C.
1000. CHP Acquisition Corp.
1001. CHP Acquisition, LLC
1002. Christiana CVS, Inc.
1003. Chula Vista CVS, Inc.
1004. Church Avenue CVS, Inc.
1005. Cicero Addison CVS, L.L.C.
1006. Cincinnati CVS, L.L.C.
1007. Cin-Dayton CVS, Inc.
1008. CIP Acquisition, LLC
1009. Circle Plaza CVS, Inc.
1010. Circle Tallahassee RE, L.L.C.
1011. Circulation, LLC
1012. City Line Avenue CVS, Inc.
1013. Claims Administration Corp.
1014. ClaimsPro Management Services, Inc.
1015. Clairmont Road CVS, Inc.
1016. Clairton Boulevard CVS, Inc.
1017. Claremont River CVS, Inc.
1018. Clarendon Blvd. CVS, Inc.
1019. Clarendon Boulevard CVS, Inc.
1020. Clark Chicago CVS, L.L.C.
1021. Clark CVS, Inc.
1022. Clarkston CVS, Inc.
1023. Clarksville MD CVS, L.L.C.
1024. Clayton CVS, Inc.
1025. Clearwater CVS, Inc.
1026. Clearwater Sunset CVS, Inc.
1027. Clementon Square CVS, Inc.
1028. Clermont CVS, L.L.C.
1029. Cleveland Lorain CVS, Inc.
1030. Cleveland Primary Care Associates, P.A., Inc.
1031. Cliffside Park CVS, L.L.C.
1032. Clifton CVS, Inc.
1033. Clint Moore Boca Raton CVS, L.L.C.
1034. Clinton Center CVS, Inc.
1035. Clinton Discount Stores, Inc.
1036. Clinton Post CVS, Inc.
1037. Cloppers Mill CVS, Inc.
1038. Cloppers Mill Peoples, inc.
1039. Clover CVS, L.L.C.
1040. Clyde Daytona CVS, L.L.C.
1041. CMBS Holdings, Inc.
1042. CMBS Holdings, Inc. II
1043. CMBS Holdings, L.L.C.
1044. Cochran CVS, L.L.C.
1045. Coconut Creek CVS, Inc.

1046. Cofinity, Inc.
1047. Cohasset CVS, Inc.
1048. Cohoes CVS, L.L.C.
1049. Coit Dallas CVS, L.P.
1050. Coit McDermott CVS, L.P.
1051. Colchester CT CVS, Inc.
1052. College Anaheim CVS, L.L.C.
1053. College Point CVS, Inc.
1054. College Street CVS, Inc.
1055. Collegeville CVS, Inc.
1056. Collings CVS, Inc.
1057. Colonial Place CVS, Inc.
1058. Colonie CVS, Inc.
1059. Columbia CVS, Inc.
1060. Columbus CVS, L.L.C.
1061. Columbus High Street CVS, Inc.
1062. Columbus New York CVS, Inc.
1063. Columbus Polaris CVS, Inc.
1064. Commack CVS, Inc.
1065. Commerce Palms Tampa CVS, L.L.C.
1066. Commercial CVS, Inc.
1067. Committed Provider Services, LLC
1068. COMMUNITY HEALTH CARE SOLUTIONS LLC
1069. Compass Health Services, LLC
1070. Compo Center CVS, Inc.
1071. Compscript, LLC
1072. Computer Development, Inc.
1073. Concord Crisco CVS, Inc.
1074. Concord Road CVS, Inc.
1075. Conewango CVS, Inc.
1076. Confident Care Health Plan, Inc.
1077. Congress Austin CVS TX, L.L.C.
1078. Connecticut Avenue CVS, Inc.
1079. Connecticut CVS Pharmacy, L.L.C.
1080. Conservco, Inc.
1081. Conshohocken CVS, Inc.
1082. Constitution Blvd. CVS, Inc.
1083. Consumer Health Interactive, L.L.C.
1084. Consumer Value Store of Bangor, Inc.
1085. Consumer Value Stores of Lowell, Inc.
1086. Consumer Value stores of Merrimack, Inc.
1087. Consumer Value Stores of Revere, Inc.
1088. Consumer Value Stores of Rhode Island, Inc.
1089. Consumer Value Stores of White City, Inc.
1090. Consumer Value Stores of Worcester, Inc.
1091. Continental Life Insurance Company of Brentwood, Tennessee
1092. Continuing Care Rx, LLC
1093. Conyers CVS, Inc.
1094. Coolidge Corner CVS, Inc.
1095. Coon Rapids MN CVS, L.L.C.
1096. Cooper City CVS, L.L.C.
1097. Coopersburg CVS, Inc.
1098. Copiaque CVS, Inc.
1099. Copley CVS, Inc.
1100. Coral Ridge CVS, L.L.C.
1101. Coram Alternate Site Services, Inc.
1102. Coram Clinical Trials, Inc.
1103. Coram Healthcare Corporation of Alabama
1104. Coram Healthcare Corporation of Florida
1105. Coram Healthcare Corporation of Greater D.C.
1106. Coram Healthcare Corporation of Greater New York
1107. Coram Healthcare Corporation of Indiana
1108. Coram Healthcare Corporation of Massachusetts
1109. Coram Healthcare Corporation of Mississippi
1110. Coram Healthcare Corporation of Nevada
1111. Coram Healthcare Corporation of North Texas

1112. Coram Healthcare Corporation of Northern California
1113. Coram Healthcare Corporation of Rhode Island
1114. Coram Healthcare Corporation of Southern California
1115. Coram Healthcare Corporation of Southern Florida
1116. Coram Healthcare Corporation of Utah
1117. Coram Healthcare/Carolina Home Therapeutics, LLC
1118. Coram LLC
1119. Coram Service Corporation
1120. Coram Specialty Infusion Services, Inc.
1121. CoramRx, LLC
1122. Corbin Avenue CVS, Inc.
1123. Corey Enterprises, Inc.
1124. Cornelius CVS, Inc.
1125. Corning Park Plaza CVS, Inc.
1126. Corona CVS, Inc.
1127. Corporate Benefit Strategies, Inc.
1128. Corporate Health Administrators, Inc.
1129. Corporate Health Insurance Company
1130. Cortez Bradenton CVS, L.L.C.
1131. Cottage Grove CVS, Inc.
1132. Cotuit CVS, Inc.
1133. County Line CVS, Inc.
1134. County Road CVS, L.L.C.
1135. Court Street CVS, L.L.C.
1136. Courtland Street CVS, Inc.
1137. Courtyards of Costa Mesa CVS, Inc.
1138. Coventry Consumer Advantage, Inc.
1139. Coventry CT CVS, Inc.
1140. Coventry Financial Management Services, Inc.
1141. Coventry Health and Life Insurance Company
1142. Coventry Health Care National Accounts, Inc.
1143. Coventry Health Care National Network, Inc.
1144. Coventry Health Care of Delaware, Inc.
1145. Coventry Health Care of Florida, Inc.
1146. Coventry Health Care of Georgia, Inc.
1147. Coventry Health Care of Illinois, Inc.
1148. Coventry Health Care of Iowa, Inc.
1149. Coventry Health Care of Kansas, Inc.
1150. Coventry Health Care of Louisiana, Inc.
1151. Coventry Health Care of Missouri, Inc.
1152. Coventry Health Care of Nebraska, Inc.
1153. Coventry Health Care of Pennsylvania, Inc.
1154. Coventry Health Care of Texas, Inc.
1155. Coventry Health Care of the Carolinas, Inc.
1156. Coventry Health Care of Virginia, Inc.
1157. Coventry Health Care of West Virginia, Inc.
1158. Coventry Health Care Workers Compensation, Inc.
1159. Coventry Health Care, Inc.
1160. Coventry Health of Michigan, Inc.
1161. Coventry Health Plan of Florida, Inc.
1162. Coventry Healthcare Management Corporation
1163. Coventry Independent Medical Exams of Texas, PA
1164. Coventry Lake CVS, Inc.
1165. Coventry Management Services, Inc.

1166. Coventry Merger Holdings, Inc.
1167. Coventry Merger Sub
1168. Coventry Prescription Management Services, Inc.
1169. Coventry Rehabilitation Services, Inc.
1170. Coventry Specialty Services, LLC
1171. Coventry Square CVS, Inc.
1172. Coventry Summit Health Plan, Inc.
1173. Coventry Transplant Network, Inc.
1174. CoventryCares of Michigan, Inc.
1175. Coviello Plaza CVS, Inc.
1176. Covina (Cal.) CVS, Inc.
1177. Covington CVS, Inc.
1178. Cox CVS, Inc.
1179. CP Acquisition Corp.
1180. CP Acquisition, LLC
1181. CP Red Springs NC 2008, LLC
1182. CP Services LLC
1183. CR 545 Davenport CVS, L.L.C.
1184. Crabapple CVS, Inc.
1185. Craig Road CVS, L.L.C.
1186. Cranberry CVS, Inc.
1187. Cranberry PA CVS, Inc.
1188. Cranberry Township CVS, Inc.
1189. Cranston Retailer, Inc.
1190. Cranston RI CVS, Inc.
1191. Cranston-Elmwood CVS, Inc.
1192. Cranston-Reservoir CVS, Inc.
1193. Cresco CVS, Inc.
1194. Cressona Mall CVS, Inc.
1195. Crest CVS, Inc.
1196. Crestwood KY CVS, Inc.
1197. Crismon Mesa CVS, L.L.C.
1198. Criterion Communications, Inc.
1199. Crofton MD CVS, L.L.C.
1200. Cromwell CT CVS, Inc.
1201. Cropsey Avenue CVS, L.L.C.
1202. Cross Keys Place CVS, Inc.
1203. Crossgates CVS Store, Inc.
1204. Crossroads Plaza CVS, Inc.
1205. Croton-On-Hudson CVS, L.L.C.
1206. Crowley TX CVS, L.P.
1207. Croydon CVS, Inc.
1208. Crystal Drive CVS, L.L.C.
1209. Crystal Lake CVS, L.L.C.
1210. Crystal Plaza CVS, Inc.,
1211. Crystal Waterford CVS, Inc.
1212. CSR, Inc.
1213. Cucamonga Foothill CVS, L.L.C.
1214. Culver City CVS, Inc.
1215. Cumberland Bear Hill CVS, Inc.
1216. Cumberland Church CVS, Inc.
1217. Cumberland Retailer, Inc.
1218. Cumming GA CVS, Inc.
1219. Cumru CVS, Inc.
1220. Curaflex Health Services
1221. Cuyahoga Oakwood CVS, Inc.
1222. CVS 1001 MA, L.L.C.
1223. CVS 10012 OK, L.L.C.
1224. CVS 10013 VA, L.L.C.
1225. CVS 10015 MA, L.L.C.
1226. CVS 10018 VA, L.L.C.
1227. CVS 10019 AR, L.L.C.
1228. CVS 10021 VA, L.L.C.
1229. CVS 10024 VA, L.L.C.
1230. CVS 10049 KY, L.L.C.
1231. CVS 10065 OK, L.L.C.
1232. CVS 10072 TN, L.L.C.
1233. CVS 10076 AL, L.L.C.
1234. CVS 10078 FL, L.L.C.
1235. CVS 10088 VA, L.L.C.
1236. CVS 10099 DE, L.L.C.
1237. CVS 10101 OK, L.L.C.
1238. CVS 10102 OK, L.L.C.
1239. CVS 10117 VA, L.L.C.
1240. CVS 10122 FL, L.L.C.
1241. CVS 10124 WV, L.L.C.
1242. CVS 10125 MA, L.L.C.
1243. CVS 10131 FL, L.L.C.
1244. CVS 10143 WI, L.L.C.
1245. CVS 10154 GA, L.L.C.
1246. CVS 10156 NC, L.L.C.
1247. CVS 10163 WI, L.L.C.
1248. CVS 10170 VA, L.L.C.
1249. CVS 10172 WI, L.L.C.

1250. CVS 10175 OK, L.L.C
1251. CVS 10196 MA, L.L.C.
1252. CVS 10201 MN, L.L.C.
1253. CVS 10202 VA, L.L.C.
1254. CVS 10205 KY, L.L.C.
1255. CVS 10206 AL, L.L.C.
1256. CVS 10208 AL, L.L.C.
1257. CVS 10209 OH, L.L.C.
1258. CVS 10213 OK, L.L.C.
1259. CVS 10214 OK, L.L.C.
1260. CVS 10238 DE, L.L.C.
1261. CVS 10242 NE, L.L.C.
1262. CVS 10243 NE, L.L.C.
1263. CVS 10246 OH, L.L.C.
1264. CVS 10248 OH, L.L.C.
1265. CVS 10251 VA, L.L.C.
1266. CVS 10252 MN, L.L.C.
1267. CVS 10255 AR, L.L.C.
1268. CVS 10272 OK, L.L.C.
1269. CVS 10273 OK, L.L.C.
1270. CVS 10274 OK, L.L.C.
1271. CVS 10275 OK, L.L.C.
1272. CVS 10279 KY, L.L.C.
1273. CVS 10286 VA, L.L.C.
1274. CVS 10293 NE, L.L.C.
1275. CVS 10320 VA, L.L.C.
1276. CVS 10326 OK, L.L.C.
1277. CVS 10346 FL, L.L.C.
1278. CVS 10357 GA, L.L.C.
1279. CVS 10358 GA, L.L.C.
1280. CVS 10372 OH, L.L.C.
1281. CVS 10374 OH, L.L.C.
1282. CVS 10376 DE, L.L.C.
1283. CVS 10396 MN, L.L.C.
1284. CVS 1040 FL, L.L.C.
1285. CVS 10408 AR, L.L.C.
1286. CVS 10409 AR, L.L.C.
1287. CVS 1041 MA, L.L.C.
1288. CVS 10410 NE, L.L.C.
1289. CVS 10411 WI, L.L.C.
1290. CVS 10416 AL, L.L.C.
1291. CVS 10419 WI, L.L.C.
1292. CVS 10422 VA, L.L.C.
1293. CVS 10430 AR, L.L.C.
1294. CVS 10431 AR, L.L.C.
1295. CVS 10432 AR, L.L.C.
1296. CVS 10437 OK, L.L.C.
1297. CVS 10441 NE, L.L.C.
1298. CVS 10453 VA, L.L.C.
1299. CVS 10454 VA, L.L.C.
1300. CVS 10457 OH, L.L.C.
1301. CVS 10501 MA, L.L.C.
1302. CVS 10504 FL, L.L.C.
1303. CVS 10515 TN, L.L.C.
1304. CVS 10518 AR, L.L.C.
1305. CVS 10519 AR, L.L.C.
1306. CVS 10520 OK, L.L.C.
1307. CVS 10533 WI, L.L.C.
1308. CVS 10534 AR, L.L.C.
1309. CVS 10539 AR, L.L.C.
1310. CVS 10549 WI, L.L.C.
1311. CVS 1055 FL, L.L.C.
1312. CVS 10560 OK, L.L.C.
1313. CVS 10561 OK, L.L.C.
1314. CVS 10563 VA, L.L.C.
1315. CVS 10566 WV, L.L.C.
1316. CVS 10586 VA, L.L.C.
1317. CVS 10589 GA, L.L.C.
1318. CVS 1063 CA, L.L.C.
1319. CVS 10644 FL, L.L.C.
1320. CVS 10645 TN, L.L.C.
1321. CVS 10666 AR, L.L.C.
1322. CVS 10678 AR, L.L.C.
1323. CVS 10683 KY, L.L.C.
1324. CVS 10684 VA, L.L.C.
1325. CVS 10746 VA, L.L.C.
1326. CVS 10756 MN, L.L.C.
1327. CVS 10768 VA, L.L.C.
1328. CVS 10769 VA, L.L.C.
1329. CVS 10770 VA, L.L.C.
1330. CVS 10771 MN, L.L.C.
1331. CVS 10772 WI, L.L.C.
1332. CVS 10779 AR, L.L.C.
1333. CVS 1078 IN, L.L.C.
1334. CVS 10781 CO, L.L.C.
1335. CVS 10782 CO, L.L.C.

1336. CVS 10783 CO, L.L.C.
1337. CVS 10784 CO, L.L.C.
1338. CVS 10785 CO, L.L.C.
1339. CVS 10787 SC, L.L.C.
1340. CVS 10788 KY, L.L.C.
1341. CVS 1079 GA, L.L.C.
1342. CVS 10811 AL, L.L.C.
1343. CVS 10812 KY, L.L.C.
1344. CVS 10816 AR, L.L.C.
1345. CVS 10830 CO, L.L.C.
1346. CVS 10831 CO, L.L.C.
1347. CVS 10836 MA, L.L.C.
1348. CVS 10893 OH, L.L.C.
1349. CVS 10898 AL, L.L.C.
1350. CVS 10937 VA, L.L.C.
1351. CVS 10949 TN, L.L.C.
1352. CVS 10958 CO, L.L.C.
1353. CVS 10967 VA, L.L.C.
1354. CVS 10968 VA, L.L.C.
1355. CVS 10975 AR, L.L.C.
1356. CVS 10976 OK, L.L.C.
1357. CVS 1099 LA, L.L.C.
1358. CVS 10990 VA, L.L.C.
1359. CVS 10992 VA, L.L.C.
1360. CVS 10th Street, L.L.C.
1361. CVS 11000 CO, L.L.C.
1362. CVS 11001 CO, L.L.C.
1363. CVS 11002 CO, L.L.C.
1364. CVS 11016 AL, L.L.C.
1365. CVS 11017 GA, L.L.C.
1366. CVS 11019 KY, L.L.C.
1367. CVS 11024 CO, L.L.C.
1368. CVS 11056 VA, L.L.C.
1369. CVS 11070 MN, L.L.C.
1370. CVS 11083 VA, L.L.C.
1371. CVS 11086 OH, L.L.C.
1372. CVS 11089 KY, L.L.C.
1373. CVS 11092 OK, L.L.C.
1374. CVS 11093 AR, L.L.C.
1375. CVS 11104 CO, L.L.C.
1376. CVS 11105 CO, L.L.C.
1377. CVS 11115 VA, L.L.C.
1378. CVS 11138 CO, L.L.C.
1379. CVS 1114 FL, L.L.C.
1380. CVS 11155 OH, L.L.C.
1381. CVS 11158 AR, L.L.C.
1382. CVS 11179 VA, L.L.C.
1383. CVS 1118 NY, L.L.C.
1384. CVS 11233 VA, L.L.C.
1385. CVS 1126 FL, L.L.C.
1386. CVS 11288 MA, L.L.C.
1387. CVS 113 FL, L.L.C.
1388. CVS 1131 MA, L.L.C.
1389. CVS 11337 CO, L.L.C.
1390. CVS 1140 SC, L.L.C.
1391. CVS 11450 SC LLC
1392. CVS 115 W., L.L.C.
1393. CVS 1150 MI, L.L.C.
1394. CVS 1161 IL, L.L.C.
1395. CVS 1172 IL, L.L.C.
1396. CVS 1189 MA, L.L.C.
1397. CVS 1194 SC, L.L.C.
1398. CVS 12 VA, L.L.C.
1399. CVS 1200 SC, L.L.C.
1400. CVS 1218 NC, L.L.C.
1401. CVS 1223 OH, L.L.C.
1402. CVS 1246 NC, L.L.C.
1403. CVS 1316 FL, L.L.C.
1404. CVS 1359 GA, L.L.C.
1405. CVS 1383 VA, L.L.C.
1406. CVS 1420 GA, L.L.C.
1407. CVS 1423 VA, L.L.C.
1408. CVS 1427, L.L.C.
1409. CVS 1428 WV, L.L.C.
1410. CVS 1429 WV, L.L.C.
1411. CVS 1435 MD, L.L.C.
1412. CVS 1452 MD, L.L.C.
1413. CVS 1461 MD, L.L.C.
1414. CVS 1464 OH, L.L.C.
1415. CVS 1481 MD, L.L.C.
1416. CVS 1488 MD, L.L.C.
1417. CVS 1501 MD, L.L.C.
1418. CVS 1507 NV, L.L.C.
1419. CVS 1515 MD, L.L.C.
1420. CVS 1525 VA, L.L.C.
1421. CVS 1534 VA, L.L.C.

1422. CVS 1538 VA, L.L.C.
1423. CVS 1547 VA, L.L.C.
1424. CVS 1550 VA, L.L.C.
1425. CVS 1553 VA, L.L.C.
1426. CVS 1556 VA, L.L.C.
1427. CVS 1557 VA, L.L.C.
1428. CVS 1561 VA, L.L.C.
1429. CVS 1589 MI, L.L.C.
1430. CVS 161 SC, L.L.C.
1431. CVS 1619 IL, L.L.C.
1432. CVS 1643 NC, L.L.C.
1433. CVS 1674 NC, L.L.C.
1434. CVS 1741 TN, L.L.C.
1435. CVS 1742 NC, L.L.C.
1436. CVS 1743 AZ, L.L.C.
1437. CVS 1748 MI, L.L.C.
1438. CVS 1752 NC, L.L.C.
1439. CVS 1756 OH, L.L.C.
1440. CVS 1758 MI, L.L.C.
1441. CVS 1769 FL, L.L.C.
1442. CVS 1777 AL, L.L.C.
1443. CVS 1782 NJ, L.L.C.
1444. CVS 1786 MA, L.L.C.
1445. CVS 1798 VA, L.L.C.
1446. CVS 180 SC, L.L.C.
1447. CVS 1803 MA, L.L.C.
1448. CVS 1815 FL, L.L.C.
1449. CVS 1836 VA, L.L.C.
1450. CVS 1844 MA, L.L.C.
1451. CVS 1867 MA, L.L.C.
1452. CVS 1874 MA, L.L.C.
1453. CVS 1933 LA, L.L.C.
1454. CVS 1944 NC, L.L.C.
1455. CVS 1978 VA, L.L.C.
1456. CVS 1979 VA, L.L.C.
1457. CVS 1991 VA, L.L.C.
1458. CVS 20 MA, L.L.C.
1459. CVS 2003 VA, L.L.C.
1460. CVS 2004 VA, L.L.C.
1461. CVS 2019 VA, L.L.C.
1462. CVS 2033 MD, L.L.C.
1463. CVS 2048 RI, L.L.C.
1464. CVS 205 SC, L.L.C.
1465. CVS 2065 RI, L.L.C.
1466. CVS 2105 GA, L.L.C.
1467. CVS 211 MI, L.L.C.
1468. CVS 2148 WV, L.L.C.
1469. CVS 2212 GA, L.L.C.
1470. CVS 2214 WI, L.L.C.
1471. CVS 2276 MN, L.L.C.
1472. CVS 2315 VA, L.L.C.
1473. CVS 232 NY, L.L.C.
1474. CVS 2386 TN, L.L.C.
1475. CVS 244 MD, L.L.C.
1476. CVS 2446 SC, L.L.C.
1477. CVS 2489 OK, L.L.C.
1478. CVS 249 First Avenue, L.L.C.
1479. CVS 2497 SC, L.L.C.
1480. CVS 2512 OK, L.L.C.
1481. CVS 2522 Baltimore, L.L.C.
1482. CVS 2538 NC, L.L.C.
1483. CVS 2544 GA, L.L.C.
1484. CVS 2544 Peachtree, L.L.C.
1485. CVS 2545 CT, L.L.C.
1486. CVS 2548 NC, L.L.C.
1487. CVS 2555 SC, L.L.C.
1488. CVS 2593 GA, L.L.C.
1489. CVS 264 NJ, L.L.C.
1490. CVS 266 LA, L.L.C.
1491. CVS 26th Street, L.L.C.
1492. CVS 2721 NY, L.L.C.
1493. CVS 2723 NJ, L.L.C.
1494. CVS 2731 Clearwater, L.L.C.
1495. CVS 2732 Hollywood, L.L.C.
1496. CVS 2747 FL, L.L.C.
1497. CVS 2758 Margate, L.L.C.
1498. CVS 2759 St. Petersburg, L.L.C.
1499. CVS 2760 Tampa, L.L.C.
1500. CVS 2767 Pinellas Park, L.L.C.
1501. CVS 2776 VA, L.L.C.
1502. CVS 2786 IL, L.L.C.
1503. CVS 2788 Buffalo Grove, L.L.C.
1504. CVS 2790 Evergreen, L.L.C.
1505. CVS 2797 Niles, L.L.C.
1506. CVS 2798 Chicago, L.L.C.
1507. CVS 2799 Mt. Prospect, L.L.C.

1508. CVS 2803 Tampa, L.L.C.
1509. CVS 2805 Lauderhill, L.L.C.
1510. CVS 2806 Orlando, L.L.C.
1511. CVS 2809 IL, L.L.C.
1512. CVS 2825 Brandon, L.L.C.
1513. CVS 2827 Hillside, L.L.C.
1514. CVS 2829 FL, L.L.C.
1515. CVS 2842 Palm Harbor, L.L.C.
1516. CVS 2844 Chicago, L.L.C.
1517. CVS 2846 Chicago, L.L.C.
1518. CVS 2863 Rolling Meadows, L.L.C.
1519. CVS 2868 Tinton Falls, L.L.C.
1520. CVS 2873 St. Petersburg, L.L.C.
1521. CVS 2874 Clearwater, L.L.C.
1522. CVS 2875 Tampa, L.L.C.
1523. CVS 2881 Randolph, L.L.C.
1524. CVS 2893 Miami, L.L.C.
1525. CVS 2895 Miami, L.L.C.
1526. CVS 2898 Tampa, L.L.C.
1527. CVS 28th and Eastern, Inc.
1528. CVS 2901 Waukegan, L.L.C.
1529. CVS 2903 Downers Grove, L.L.C.
1530. CVS 2904 FL, L.L.C.
1531. CVS 2935 IL, L.L.C.
1532. CVS 2936 Joliet, L.L.C.
1533. CVS 2942 Chicago, L.L.C.
1534. CVS 2948 Henderson, L.L.C.
1535. CVS 2949 East Hanover, L.L.C.
1536. CVS 2964 Maineville, L.L.C.
1537. CVS 2966 FL, L.L.C.
1538. CVS 2972 Philadelphia, L.L.C.
1539. CVS 2974 MD, L.L.C.
1540. CVS 2976 General, Inc.
1541. CVS 2977 General, Inc.
1542. CVS 2979 General, Inc.
1543. CVS 2986 Lincoln Drive, L.L.C.
1544. CVS 2987 Lincoln Park, L.L.C.
1545. CVS 2987 NJ, L.L.C.
1546. CVS 2988 General, Inc.
1547. CVS 2989 Las Vegas, L.L.C.
1548. CVS 2990 Las Vegas, L.L.C.
1549. CVS 2991 General, Inc.
1550. CVS 3005 General, Inc.
1551. CVS 3006 General, Inc.
1552. CVS 3007 General, Inc.
1553. CVS 301 MA, L.L.C.
1554. CVS 3010 Setauket, L.L.C.
1555. CVS 3038 DE, L.L.C.
1556. CVS 304 FL, L.L.C.
1557. CVS 3042 DE, L.L.C.
1558. CVS 3048 VA, L.L.C.
1559. CVS 3052 VA, L.L.C.
1560. CVS 3082 GA, L.L.C.
1561. CVS 3086 GA, L.L.C.
1562. CVS 3088 OH, L.L.C.
1563. CVS 3114 FL, L.L.C.
1564. CVS 3121 FL, L.L.C.
1565. CVS 3126 FL, L.L.C.
1566. CVS 3134 General, Inc.
1567. CVS 3136 North Arlington, L.L.C.
1568. CVS 3140 Torresdale, L.L.C.
1569. CVS 3143 Chandler, L.L.C.
1570. CVS 316 MA, L.L.C.
1571. CVS 3163 IL, L.L.C.
1572. CVS 3163 Oak Park, L.L.C.
1573. CVS 317 NC, L.L.C.
1574. CVS 3172 Las Vegas, L.L.C.
1575. CVS 3173 General, Inc.
1576. CVS 3176 General, Inc.
1577. CVS 3177 General, Inc.
1578. CVS 3178 General, Inc.
1579. CVS 3180 General, Inc.
1580. CVS 3181 General, Inc.
1581. CVS 3186 WV, L.L.C.
1582. CVS 3190 General, Inc.
1583. CVS 31st Street Astoria, L.L.C.
1584. CVS 320 Fifth Avenue, L.L.C.
1585. CVS 320 NJ, L.L.C.
1586. CVS 3200 General, Inc.
1587. CVS 3205 MN, L.L.C.
1588. CVS 3207 General, Inc.
1589. CVS 3210 Las Vegas, L.L.C.
1590. CVS 3226 FL, L.L.C.
1591. CVS 3227 FL, L.L.C.
1592. CVS 3231 DE, L.L.C.

1593. CVS 3231 FL, L.L.C.
1594. CVS 3232 NC, L.L.C.
1595. CVS 3245 FL, L.L.C.
1596. CVS 3249 FL, L.L.C.
1597. CVS 3250 FL, L.L.C.
1598. CVS 3257 FL, L.L.C.
1599. CVS 326 RI, L.L.C.
1600. CVS 3264 Phoenix, L.L.C.
1601. CVS 3268 Gilbert, L.L.C.
1602. CVS 3269 FL, L.L.C.
1603. CVS 3271 FL, L.L.C.
1604. CVS 3274 FL, L.L.C.
1605. CVS 3285 FL, L.L.C.
1606. CVS 3292 General, Inc.
1607. CVS 3295 General, Inc.
1608. CVS 3301 OH, L.L.C.
1609. CVS 3318 FL, L.L.C.
1610. CVS 3320 OH, L.L.C.
1611. CVS 3321 OH, L.L.C.
1612. CVS 3336 VA, L.L.C.
1613. CVS 3338 OH, L.L.C.
1614. CVS 3340 OH, L.L.C.
1615. CVS 3343 OH, L.L.C.
1616. CVS 3346 OH, L.L.C.
1617. CVS 3348 GA, L.L.C.
1618. CVS 3350 MN, L.L.C.
1619. CVS 3353 OH, L.L.C.
1620. CVS 3356 OH, L.L.C.
1621. CVS 3380 SC, L.L.C.
1622. CVS 3381 OH, L.L.C.
1623. CVS 3395 FL, L.L.C.
1624. CVS 3396 VA, L.L.C.
1625. CVS 3397 VA, L.L.C.
1626. CVS 3407 OH, L.L.C.
1627. CVS 3416 OH, L.L.C.
1628. CVS 3418 FL, L.L.C.
1629. CVS 3432 OH, L.L.C.
1630. CVS 3435 NC, L.L.C.
1631. CVS 3436 Mesa, L.L.C.
1632. CVS 3452 OH, L.L.C.
1633. CVS 3457 OH, L.L.C.
1634. CVS 3460 VA, L.L.C.
1635. CVS 3468 OH, L.L.C.
1636. CVS 3471 OH, L.L.C.
1637. CVS 3472 OH, L.L.C.
1638. CVS 3474 OH, L.L.C.
1639. CVS 3475 WV, L.L.C.
1640. CVS 3492 Orlando, L.L.C.
1641. CVS 3502 VA, L.L.C.
1642. CVS 3503 VA, L.L.C.
1643. CVS 3515 VA, L.L.C.
1644. CVS 3519 FL, L.L.C.
1645. CVS 352 MD, L.L.C.
1646. CVS 3521 VA, L.L.C.
1647. CVS 3527 NC, L.L.C.
1648. CVS 3537 SC, L.L.C.
1649. CVS 3543 SC, L.L.C.
1650. CVS 3558 NV, L.L.C.
1651. CVS 3560 SC, L.L.C.
1652. CVS 3563 NC, L.L.C.
1653. CVS 3569 NC, L.L.C.
1654. CVS 3574 NC, L.L.C.
1655. CVS 3591 FL, L.L.C.
1656. CVS 3593 NC, L.L.C.
1657. CVS 3597 SC, L.L.C.
1658. CVS 3617 Forks Township, L.L.C.
1659. CVS 3625 AZ, L.L.C.
1660. CVS 3625 Phoenix, L.L.C.
1661. CVS 3643 NC, L.L.C.
1662. CVS 3652 FL, L.L.C.
1663. CVS 3661 FL, L.L.C.
1664. CVS 3663 FL, L.L.C.
1665. CVS 3667 FL, L.L.C.
1666. CVS 3671 FL, L.L.C.
1667. CVS 3693 General, Inc.
1668. CVS 3699 General, Inc.
1669. CVS 3701 General, Inc.
1670. CVS 3702 General, Inc.
1671. CVS 3707 General, Inc.
1672. CVS 3708 General, Inc.
1673. CVS 3711 NC, L.L.C.
1674. CVS 3718 General, Inc.
1675. CVS 3722 FL, L.L.C.
1676. CVS 3724 General, Inc.
1677. CVS 3728 TN, L.L.C.
1678. CVS 373 MA, L.L.C.

1679. CVS 3743 TN, L.L.C.
1680. CVS 3745 Peoria, L.L.C.
1681. CVS 3749 AZ, L.L.C.
1682. CVS 3749 Goodyear, L.L.C.
1683. CVS 3753 FL, L.L.C.
1684. CVS 3755 St. Petersburg, L.L.C.
1685. CVS 3760 GA, L.L.C.
1686. CVS 3762 TN, L.L.C.
1687. CVS 3766 Dacula, L.L.C.
1688. CVS 3767 GA, L.L.C.
1689. CVS 3769, L.L.C.
1690. CVS 3771 GA, L.L.C.
1691. CVS 3778 GA, L.L.C.
1692. CVS 3791 TN, L.L.C.
1693. CVS 3805 SC, L.L.C.
1694. CVS 3818 FL, L.L.C.
1695. CVS 3821 SC, L.L.C.
1696. CVS 3831 NC, L.L.C.
1697. CVS 3833 NC, L.L.C.
1698. CVS 3850 SC, L.L.C.
1699. CVS 386 TN, L.L.C.
1700. CVS 3861 SC, L.L.C.
1701. CVS 3863 SC, L.L.C.
1702. CVS 3869 SC, L.L.C.
1703. CVS 3874 GA, L.L.C.
1704. CVS 3892 SC, L.L.C.
1705. CVS 3893 VA, L.L.C.
1706. CVS 3895 NC, L.L.C.
1707. CVS 3897 General, Inc.
1708. CVS 3900 General, Inc.
1709. CVS 3919 FL, L.L.C.
1710. CVS 3921 FL, L.L.C.
1711. CVS 3922 VA, L.L.C.
1712. CVS 3923 FL, L.L.C.
1713. CVS 3949 VA, L.L.C.
1714. CVS 3965 AZ, L.L.C.
1715. CVS 3965 Chandler, L.L.C.
1716. CVS 3967 AZ, L.L.C.
1717. CVS 397 RI, L.L.C.
1718. CVS 3973 NC, L.L.C.
1719. CVS 3980 OH, L.L.C.
1720. CVS 3987 NC, L.L.C.
1721. CVS 3988 NC, L.L.C.
1722. CVS 4005 FL, L.L.C.
1723. CVS 4009 FL, L.L.C.
1724. CVS 4015 FL, L.L.C.
1725. CVS 4016 MA, L.L.C.
1726. CVS 4025 FL, L.L.C.
1727. CVS 4073 MA, L.L.C.
1728. CVS 4083 Largo, L.L.C.
1729. CVS 4099 FL, L.L.C.
1730. CVS 410 FL, L.L.C.
1731. CVS 4110 TN, L.L.C.
1732. CVS 4135 NC, L.L.C.
1733. CVS 4139 FL, L.L.C.
1734. CVS 4143 MA, L.L.C.
1735. CVS 4146 FL, L.L.C.
1736. CVS 4153 SC, L.L.C.
1737. CVS 4155 FL, L.L.C.
1738. CVS 4164 GA, L.L.C.
1739. CVS 4175 VA, L.L.C.
1740. CVS 4176 NC, L.L.C.
1741. CVS 4178 GA, L.L.C.
1742. CVS 4194 VA, L.L.C.
1743. CVS 4203 GA, L.L.C.
1744. CVS 4206 GA, L.L.C.
1745. CVS 421 FL, L.L.C.
1746. CVS 4220 MD, L.L.C.
1747. CVS 4225 MD, L.L.C.
1748. CVS 4226 FL, L.L.C.
1749. CVS 4237 VA, L.L.C.
1750. CVS 4240 TN, L.L.C.
1751. CVS 4244 WV, L.L.C.
1752. CVS 4251 GA, L.L.C.
1753. CVS 4255 GA, L.L.C.
1754. CVS 4262 IL, L.L.C.
1755. CVS 4269 Geneva, L.L.C.
1756. CVS 427 NC, L.L.C.
1757. CVS 4272 General, Inc.
1758. CVS 4278 General, Inc.
1759. CVS 4284 NC, L.L.C.
1760. CVS 4285 VA, L.L.C.
1761. CVS 4290 NC, L.L.C.
1762. CVS 4292 VA, L.L.C.
1763. CVS 4293 NC, L.L.C.
1764. CVS 4297 NC, L.L.C.

1765. CVS 4298 NC, L.L.C.
1766. CVS 4300 OH, L.L.C.
1767. CVS 4307 General, Inc.
1768. CVS 433 MA, L.L.C.
1769. CVS 4331 OH, L.L.C.
1770. CVS 4335 VA, L.L.C.
1771. CVS 4337 GA, L.L.C.
1772. CVS 4363 VA, L.L.C.
1773. CVS 4365 TN, L.L.C.
1774. CVS 4366 OH, L.L.C.
1775. CVS 4371 MD, L.L.C.
1776. CVS 4374 NC, L.L.C.
1777. CVS 4379 NC, L.L.C.
1778. CVS 4380 WI, L.L.C.
1779. CVS 4383 General, Inc.
1780. CVS 4397 General, Inc.
1781. CVS 4404 GA, L.L.C.
1782. CVS 4415 FL, L.L.C.
1783. CVS 4419 WV, L.L.C.
1784. CVS 4421 TN, L.L.C.
1785. CVS 4424 GA, L.L.C.
1786. CVS 4427 General, Inc.
1787. CVS 4428 TN, L.L.C.
1788. CVS 4444 NC, L.L.C.
1789. CVS 4456 General, Inc.
1790. CVS 4458 FL, L.L.C.
1791. CVS 447 MA, L.L.C.
1792. CVS 4474 General, Inc.
1793. CVS 4480 FL, L.L.C.
1794. CVS 4485 FL, L.L.C.
1795. CVS 449 MA, L.L.C.
1796. CVS 4506 GA, L.L.C.
1797. CVS 4514 GA, L.L.C.
1798. CVS 4519 MS, L.L.C.
1799. CVS 452 MD, L.L.C.
1800. CVS 4523 SC, L.L.C.
1801. CVS 4532 GA, L.L.C.
1802. CVS 4533 TN, L.L.C.
1803. CVS 4534 GA, L.L.C.
1804. CVS 4536 MS, L.L.C.
1805. CVS 4540 GA, L.L.C.
1806. CVS 4544 RI, L.L.C.
1807. CVS 4545 GA, L.L.C.
1808. CVS 4551 OH, L.L.C.
1809. CVS 4556 GA, L.L.C.
1810. CVS 4564 GA, L.L.C.
1811. CVS 4565 GA, L.L.C.
1812. CVS 4567 GA, L.L.C.
1813. CVS 4569 GA, L.L.C.
1814. CVS 4571 GA, L.L.C.
1815. CVS 4572 OH, L.L.C.
1816. CVS 4573 MN, L.L.C.
1817. CVS 4576 GA, L.L.C.
1818. CVS 4578 MN, L.L.C.
1819. CVS 4579 GA, L.L.C.
1820. CVS 4582 GA, L.L.C.
1821. CVS 4583 GA, L.L.C.
1822. CVS 4589 GA, L.L.C.
1823. CVS 4593 GA, L.L.C.
1824. CVS 4600 GA, L.L.C.
1825. CVS 4603 GA, L.L.C.
1826. CVS 4605 OH, L.L.C.
1827. CVS 4620 NC, L.L.C.
1828. CVS 4628 SC, L.L.C.
1829. CVS 4629 FL, L.L.C.
1830. CVS 4631 MI, L.L.C.
1831. CVS 4639 FL, L.L.C.
1832. CVS 4668 GA, L.L.C.
1833. CVS 4669 GA, L.L.C.
1834. CVS 467 AL, L.L.C.
1835. CVS 4672 GA, L.L.C.
1836. CVS 4678 GA, L.L.C.
1837. CVS 4695 GA, L.L.C.
1838. CVS 47 MS, L.L.C.
1839. CVS 4706 General, Inc.
1840. CVS 4721 GA, L.L.C.
1841. CVS 4738 FL, L.L.C.
1842. CVS 4765 GA, L.L.C.
1843. CVS 4767 AL, L.L.C.
1844. CVS 4769 FL, L.L.C.
1845. CVS 4769 SC, L.L.C.
1846. CVS 4772 East Vincent, L.L.C.
1847. CVS 4773 Gilbertsville, L.L.C.
1848. CVS 4777 General, Inc.
1849. CVS 4778 IL, L.L.C.
1850. CVS 4784 NV, L.L.C

1851. CVS 4785 FL, L.L.C.
1852. CVS 4794 General, Inc.
1853. CVS 4795 AZ, L.L.C.
1854. CVS 4797 FL, L.L.C.
1855. CVS 4803 OH, L.L.C.
1856. CVS 4807 OH, L.L.C.
1857. CVS 4811 OH, L.L.C.
1858. CVS 4822 AL, L.L.C.
1859. CVS 4823 AL, L.L.C.
1860. CVS 4826 AL, L.L.C.
1861. CVS 4832 AL, L.L.C.
1862. CVS 4833 AL, L.L.C.
1863. CVS 4834 AL, L.L.C.
1864. CVS 4838 AL, L.L.C.
1865. CVS 4840 AL, L.L.C.
1866. CVS 4842 AL, L.L.C.
1867. CVS 4843 AL, L.L.C.
1868. CVS 4846 NC, L.L.C.
1869. CVS 4847 AL, L.L.C.
1870. CVS 4853 AL, L.L.C.
1871. CVS 4854 AL, L.L.C.
1872. CVS 4855 AL, L.L.C.
1873. CVS 4858 AL, L.L.C.
1874. CVS 4861 AL, L.L.C.
1875. CVS 4863 AL, L.L.C.
1876. CVS 4866 AL, L.L.C.
1877. CVS 4882 AL, L.L.C.
1878. CVS 4888 AL, L.L.C.
1879. CVS 4889 AL, L.L.C.
1880. CVS 4893 AL, L.L.C.
1881. CVS 4896 OK, L.L.C.
1882. CVS 4900 AL, L.L.C.
1883. CVS 4902 AL, L.L.C.
1884. CVS 4905 AL, L.L.C.
1885. CVS 4921 DE, L.L.C.
1886. CVS 4925 AL, L.L.C.
1887. CVS 4931 AL, L.L.C.
1888. CVS 4936 AL, L.L.C.
1889. CVS 4938 AL, L.L.C.
1890. CVS 4941 AL, L.L.C.
1891. CVS 4944 AL, L.L.C.
1892. CVS 4946 AL, L.L.C.
1893. CVS 4947 AL, L.L.C.
1894. CVS 4948 AL, L.L.C.
1895. CVS 4960 AL, L.L.C.
1896. CVS 4976 AL, L.L.C.
1897. CVS 4977 IL, L.L.C.
1898. CVS 4978 IL, L.L.C.
1899. CVS 4981 IL, L.L.C.
1900. CVS 4981 MA, L.L.C.
1901. CVS 4982 IN, L.L.C.
1902. CVS 4983 General, Inc.
1903. CVS 4985 General, Inc.
1904. CVS 4987 FL, L.L.C.
1905. CVS 4989 FL, L.L.C.
1906. CVS 4990 TN, L.L.C.
1907. CVS 4992 TN, L.L.C.
1908. CVS 4993 FL, L.L.C.
1909. CVS 4993 MS, L.L.C.
1910. CVS 4994 Miami, L.L.C.
1911. CVS 4995 IL, L.L.C.
1912. CVS 4996 WI, L.L.C.
1913. CVS 4997 FL, L.L.C.
1914. CVS 4998 Melbourne, L.L.C.
1915. CVS 4999 Suntree, L.L.C.
1916. CVS 5004 FL, L.L.C.
1917. CVS 5006 FL, L.L.C.
1918. CVS 5012 CA, L.L.C.
1919. CVS 5018 TN, L.L.C.
1920. CVS 5021 VA, L.L.C.
1921. CVS 5029 AZ, L.L.C.
1922. CVS 5041 FL, L.L.C.
1923. CVS 5044 SC, L.L.C.
1924. CVS 506 NJ, L.L.C.
1925. CVS 5060 OH, L.L.C.
1926. CVS 5089 NY, L.L.C.
1927. CVS 5111 FL, L.L.C.
1928. CVS 5112 FL, L.L.C.
1929. CVS 5113 NV, L.L.C.
1930. CVS 5116 FL, L.L.C.
1931. CVS 5122 FL, L.L.C.
1932. CVS 5127 FL, L.L.C.
1933. CVS 5128 NJ, L.L.C.
1934. CVS 5131 AZ, L.L.C.
1935. CVS 5144 NV, L.L.C.
1936. CVS 5146 FL, L.L.C.

1937. CVS 516 VA, L.L.C.
1938. CVS 5165 FL, L.L.C.
1939. CVS 5168 MS, L.L.C.
1940. CVS 5172 FL, L.L.C.
1941. CVS 5177 FL, L.L.C.
1942. CVS 5180 FL, L.L.C.
1943. CVS 5182 FL, L.L.C.
1944. CVS 5206 IN, L.L.C.
1945. CVS 5213 IL, L.L.C.
1946. CVS 5225 General, Inc.
1947. CVS 5255 General, Inc.
1948. CVS 5258 General, Inc.
1949. CVS 5259 General, Inc.
1950. CVS 5260 General, Inc.
1951. CVS 5267 General, Inc.
1952. CVS 5269 General, Inc.
1953. CVS 5271 KS, L.L.C.
1954. CVS 5273 General, Inc.
1955. CVS 5278 LA, L.L.C.
1956. CVS 5282 LA, L.L.C.
1957. CVS 5286 NV, L.L.C.
1958. CVS 5294 LA, L.L.C.
1959. CVS 530 NY, L.L.C.
1960. CVS 5306 LA, L.L.C.
1961. CVS 5320 General, Inc.
1962. CVS 5323 LA, L.L.C.
1963. CVS 5325 LA, L.L.C.
1964. CVS 5328 General, Inc.
1965. CVS 5339 General, Inc.
1966. CVS 5346 General, Inc.
1967. CVS 5347 General, Inc.
1968. CVS 5352 GA, L.L.C.
1969. CVS 5353 GA, L.L.C.
1970. CVS 5354 LA, L.L.C.
1971. CVS 5355 GA, L.L.C.
1972. CVS 5356 GA, L.L.C.
1973. CVS 5374 LA, L.L.C.
1974. CVS 5375 FL, L.L.C.
1975. CVS 5379 NC, L.L.C.
1976. CVS 5382 IL, L.L.C.
1977. CVS 5384 NC, L.L.C.
1978. CVS 5388 General, Inc.
1979. CVS 5396 LA, L.L.C.
1980. CVS 540 Amsterdam Avenue, L.L.C.
1981. CVS 5413 AL, L.L.C.
1982. CVS 5418 GA, L.L.C.
1983. CVS 5419 SC, L.L.C.
1984. CVS 5420 NC, L.L.C.
1985. CVS 5425 OH, L.L.C.
1986. CVS 5426 OH, L.L.C.
1987. CVS 5432 LA, L.L.C.
1988. CVS 5439 FL, L.L.C.
1989. CVS 5444 GA, L.L.C.
1990. CVS 5444 General, Inc.
1991. CVS 5448 FL, L.L.C.
1992. CVS 5457 OH, L.L.C.
1993. CVS 5458 OH, L.L.C.
1994. CVS 5460 MD, L.L.C.
1995. CVS 5461 NJ, L.L.C.
1996. CVS 5466 FL, L.L.C.
1997. CVS 5466 IL, L.L.C.
1998. CVS 5467 IL, L.L.C.
1999. CVS 5467 VA, L.L.C.
2000. CVS 5468 FL, L.L.C.
2001. CVS 5469 LA, L.L.C.
2002. CVS 5472 MN, L.L.C.
2003. CVS 5476 SC, L.L.C.
2004. CVS 5477 AZ, L.L.C.
2005. CVS 5488 FL, L.L.C.
2006. CVS 5492 MN, L.L.C.
2007. CVS 5501 VA, L.L.C.
2008. CVS 5507 VA, L.L.C.
2009. CVS 5523 GA, L.L.C.
2010. CVS 5535 WI, L.L.C.
2011. CVS 5536 SC, L.L.C.
2012. CVS 5537 NC, L.L.C.
2013. CVS 5542 SC, L.L.C.
2014. CVS 5544 LA, L.L.C.
2015. CVS 5545 NC, L.L.C.
2016. CVS 5548 SC, L.L.C.
2017. CVS 5552 SC, L.L.C.
2018. CVS 5554 LA, L.L.C.
2019. CVS 5555 SC, L.L.C.
2020. CVS 5565 NC, L.L.C.
2021. CVS 5568 NC, L.L.C.

2022. CVS 5575 SC, L.L.C.
2023. CVS 5577 NC, L.L.C.
2024. CVS 5582 VA, L.L.C.
2025. CVS 5585 NC, L.L.C.
2026. CVS 5586 NC, L.L.C.
2027. CVS 5589 FL, L.L.C.
2028. CVS 5592 NC, L.L.C.
2029. CVS 5594 NC, L.L.C.
2030. CVS 5595 NC, L.L.C.
2031. CVS 5598 SC, L.L.C.
2032. CVS 5599 LA, L.L.C.
2033. CVS 56 FL, L.L.C.
2034. CVS 5604 MS, L.L.C.
2035. CVS 5606 GA, L.L.C.
2036. CVS 5608 GA, L.L.C.
2037. CVS 5612 LA, L.L.C.
2038. CVS 5613 GA, L.L.C.
2039. CVS 5616 MN, L.L.C.
2040. CVS 5617 LA, L.L.C.
2041. CVS 5618 GA, L.L.C.
2042. CVS 5622 GA, L.L.C.
2043. CVS 5625 MO, L.L.C.
2044. CVS 5626 GA, L.L.C.
2045. CVS 5631 GA, L.L.C.
2046. CVS 5657 General, Inc.
2047. CVS 5660 FL, L.L.C.
2048. CVS 5662 General, Inc.
2049. CVS 5666 OH, L.L.C.
2050. CVS 5667 General, Inc.
2051. CVS 5668 TN, L.L.C.
2052. CVS 5669 General, Inc.
2053. CVS 5670 General, Inc.
2054. CVS 5674 FL, L.L.C.
2055. CVS 5676 General, Inc.
2056. CVS 5677 IL, L.L.C.
2057. CVS 5680 GA, L.L.C.
2058. CVS 5683 GA, L.L.C.
2059. CVS 5684 GA, L.L.C.
2060. CVS 5685 General, Inc.
2061. CVS 5689 General, Inc.
2062. CVS 5690 General, Inc.
2063. CVS 5694 TN, L.L.C.
2064. CVS 5695 General, Inc.
2065. CVS 5696 General, Inc.
2066. CVS 5702 General, Inc.
2067. CVS 5704 GA, L.L.C.
2068. CVS 5718 General, Inc.
2069. CVS 5729 VA, L.L.C.
2070. CVS 5736 VA, L.L.C.
2071. CVS 5740 MS, L.L.C.
2072. CVS 5750 VA, L.L.C.
2073. CVS 5758 IL, L.L.C.
2074. CVS 5767 NJ, L.L.C.
2075. CVS 5769 IL, L.L.C.
2076. CVS 5774 IL, L.L.C.
2077. CVS 5777 MS, L.L.C.
2078. CVS 5779 AZ, L.L.C.
2079. CVS 5781 IN, L.L.C.
2080. CVS 5782 FL, L.L.C.
2081. CVS 5783 IL, L.L.C.
2082. CVS 5784 FL, L.L.C.
2083. CVS 5785 FL, L.L.C.
2084. CVS 5786 FL, L.L.C.
2085. CVS 5790 VA, L.L.C.
2086. CVS 5791 AZ, L.L.C.
2087. CVS 5792 NV, L.L.C.
2088. CVS 5793 AZ, L.L.C.
2089. CVS 5794 AZ, L.L.C.
2090. CVS 5797 IL, L.L.C.
2091. CVS 5799 General, Inc.
2092. CVS 5800 General, Inc.
2093. CVS 5801 MS, L.L.C.
2094. CVS 5802 VA, L.L.C.
2095. CVS 5804 General, Inc.
2096. CVS 5805 General, Inc.
2097. CVS 5807 General, Inc.
2098. CVS 5811 NV, L.L.C.
2099. CVS 5812 AZ, L.L.C.
2100. CVS 5814 AZ, L.L.C.
2101. CVS 5815 FL, L.L.C.
2102. CVS 5816 FL, L.L.C.
2103. CVS 582 MA, L.L.C.
2104. CVS 5821 FL, L.L.C.
2105. CVS 5822 IL, L.L.C.
2106. CVS 5828 CA, L.L.C.
2107. CVS 5829 IL, L.L.C.

2108. CVS 5831 NJ, L.L.C.
2109. CVS 5832 FL, L.L.C.
2110. CVS 5833 General, Inc.
2111. CVS 5835 MS, L.L.C.
2112. CVS 5838 General, Inc.
2113. CVS 5839 General, Inc.
2114. CVS 5840 General, Inc.
2115. CVS 5843 General, Inc.
2116. CVS 5844 General, Inc.
2117. CVS 5849 AZ, L.L.C.
2118. CVS 585 AL, L.L.C.
2119. CVS 5850 MS, L.L.C.
2120. CVS 5851 IL, L.L.C.
2121. CVS 5852 FL, L.L.C.
2122. CVS 5853 FL, L.L.C.
2123. CVS 5854 FL, L.L.C.
2124. CVS 5856 FL, L.L.C.
2125. CVS 5856 MA, L.L.C.
2126. CVS 5857 FL, L.L.C.
2127. CVS 5859 FL, L.L.C.
2128. CVS 5864 FL, L.L.C.
2129. CVS 5867 NJ, L.L.C.
2130. CVS 5869 General, Inc.
2131. CVS 5870 MS, L.L.C.
2132. CVS 5872 NJ, L.L.C.
2133. CVS 5875 MD, L.L.C.
2134. CVS 5877 General, Inc.
2135. CVS 5878 MS, L.L.C.
2136. CVS 5880 General, Inc.
2137. CVS 5881 General, Inc.
2138. CVS 5882 General, Inc.
2139. CVS 5883 MS, L.L.C.
2140. CVS 5884 General, Inc.
2141. CVS 5886 NC, L.L.C.
2142. CVS 5887 General, Inc.
2143. CVS 5889 CA, L.L.C.
2144. CVS 5890 AZ, L.L.C.
2145. CVS 5891 AZ, L.L.C.
2146. CVS 5892 AZ, L.L.C.
2147. CVS 5893 AZ, L.L.C.
2148. CVS 5894 General, Inc.
2149. CVS 5895 General, Inc.
2150. CVS 5896 General, Inc.
2151. CVS 5897 FL, L.L.C.
2152. CVS 5899 FL, L.L.C.
2153. CVS 590 RI, L.L.C.
2154. CVS 5901 FL, L.L.C.
2155. CVS 5906 General, Inc.
2156. CVS 5907 General, Inc.
2157. CVS 5909 MD, L.L.C.
2158. CVS 5910 General, Inc.
2159. CVS 5912 FL, L.L.C.
2160. CVS 5914 IL, L.L.C.
2161. CVS 5915 IL, L.L.C.
2162. CVS 5917 FL, L.L.C.
2163. CVS 5919 FL, L.L.C.
2164. CVS 5928 VA, L.L.C.
2165. CVS 5929 FL, L.L.C.
2166. CVS 5930 FL, L.L.C.
2167. CVS 5931 AZ, L.L.C.
2168. CVS 5934 AZ, L.L.C.
2169. CVS 5940 NV, L.L.C.
2170. CVS 5942 NV, L.L.C.
2171. CVS 5961 WV, L.L.C.
2172. CVS 5962 General, Inc.
2173. CVS 5963 General, Inc.
2174. CVS 5964 General, Inc.
2175. CVS 5965 General, Inc.
2176. CVS 5966 General, Inc.
2177. CVS 5968 General, Inc.
2178. CVS 5969 General, Inc.
2179. CVS 5970 General, Inc.
2180. CVS 5971 General, Inc.
2181. CVS 5972 General, Inc.
2182. CVS 5975 FL, L.L.C.
2183. CVS 5976 General, Inc.
2184. CVS 5977 General, Inc.
2185. CVS 5979 IL, L.L.C.
2186. CVS 5981 General, Inc.
2187. CVS 5982 General, Inc.
2188. CVS 5986 VA, L.L.C.
2189. CVS 6000 General, Inc.
2190. CVS 6001 General, Inc.
2191. CVS 6002 General, Inc.
2192. CVS 6004 OK, L.L.C.
2193. CVS 6005 General, Inc.

2194. CVS 6007 FL, L.L.C.
2195. CVS 6009 OK, L.L.C.
2196. CVS 6012 GA, L.L.C.
2197. CVS 6013 AL, L.L.C.
2198. CVS 6017 AL, L.L.C.
2199. CVS 6019 FL, L.L.C.
2200. CVS 6022 OK, L.L.C.
2201. CVS 6024 OK, L.L.C.
2202. CVS 6044 TN, L.L.C.
2203. CVS 6073 NJ, L.L.C.
2204. CVS 6075 NJ, L.L.C.
2205. CVS 6089 OH, L.L.C.
2206. CVS 6098 Wilmington OH, L.L.C.
2207. CVS 6098, L.L.C.
2208. CVS 6105 OH, L.L.C.
2209. CVS 6116 KY, L.L.C.
2210. CVS 612 MA, L.L.C.
2211. CVS 6135 NJ, L.L.C.
2212. CVS 6137 OH, L.L.C.
2213. CVS 6139 OH, L.L.C.
2214. CVS 6142 OK, L.L.C.
2215. CVS 6146 VA, L.L.C.
2216. CVS 6153 OH, L.L.C.
2217. CVS 6155 OH, L.L.C.
2218. CVS 6164 OH, L.L.C.
2219. CVS 6171 OH, L.L.C.
2220. CVS 620 ME, L.L.C.
2221. CVS 6201 MN, L.L.C.
2222. CVS 6222 OK, L.L.C.
2223. CVS 6224 OK, L.L.C..
2224. CVS 6230 OK, L.L.C.
2225. CVS 6233 OK, L.L.C.
2226. CVS 6237 OH, L.L.C.
2227. CVS 6244 KY, L.L.C.
2228. CVS 6267 TN, L.L.C.
2229. CVS 6268 OH, L.L.C.
2230. CVS 6271 OH, L.L.C.
2231. CVS 6283 VA, L.L.C.
2232. CVS 6296 VA, L.L.C.
2233. CVS 6304 TN, L.L.C.
2234. CVS 6305 WV, L.L.C.
2235. CVS 6306 WV, L.L.C.
2236. CVS 6307 WV, L.L.C.
2237. CVS 6312 WV, L.L.C.
2238. CVS 632 MA, L.L.C.
2239. CVS 6322 VA, L.L.C.
2240. CVS 6329 VA, L.L.C.
2241. CVS 6335 KY, L.L.C.
2242. CVS 6337 KY, L.L.C.
2243. CVS 6339 KY, L.L.C.
2244. CVS 6342 KY, L.L.C.
2245. CVS 6346 KY, L.L.C.
2246. CVS 6348 KY, L.L.C.
2247. CVS 6349 OH, L.L.C.
2248. CVS 6350 WV, L.L.C.
2249. CVS 6363 TN, L.L.C.
2250. CVS 6384 KY, L.L.C.
2251. CVS 6386 IL, L.L.C.
2252. CVS 6388 IL, L.L.C.
2253. CVS 6395 TN, L.L.C.
2254. CVS 6400 TN, L.L.C.
2255. CVS 6403 VA, L.L.C.
2256. CVS 6413 TN, L.L.C.
2257. CVS 6415 TN, L.L.C.
2258. CVS 6423, L.L.C.
2259. CVS 6429 TN, L.L.C.
2260. CVS 6433, L.L.C.
2261. CVS 646 FL, L.L.C.
2262. CVS 6487 IN, L.L.C.
2263. CVS 6495 IN, L.L.C.
2264. CVS 6497 IL, L.L.C.
2265. CVS 6507 MN, L.L.C.
2266. CVS 6517 IN, L.L.C.
2267. CVS 652 FL, L.L.C.
2268. CVS 6525 IN, L.L.C.
2269. CVS 657 MA, L.L.C.
2270. CVS 6572 IN. II, L.L.C.
2271. CVS 6572 IN., L.L.C.
2272. CVS 6585 IN, L.L.C.
2273. CVS 6608 New Palestine, L.L.C.
2274. CVS 6610 IN, L.L.C.
2275. CVS 6628 TN, L.L.C.
2276. CVS 6633 NC, L.L.C.
2277. CVS 6652 IN, L.L.C.
2278. CVS 6670 IN, L.L.C.
2279. CVS 6677 IN, L.L.C.

2280. CVS 6686 MN, L.L.C.
2281. CVS 6687 IN, L.L.C.
2282. CVS 6691 MN, L.L.C.
2283. CVS 6701 IL, L.L.C.
2284. CVS 6702 IL, L.L.C.
2285. CVS 6717 NV, L.L.C.
2286. CVS 6722 IN, L.L.C.
2287. CVS 6726 General, Inc.
2288. CVS 6732 FL, L.L.C.
2289. CVS 6733 General, Inc.
2290. CVS 6734 General, Inc.
2291. CVS 6737 General, Inc.
2292. CVS 6744 General, Inc.
2293. CVS 6746 General, Inc.
2294. CVS 6747 General, Inc.
2295. CVS 6753 FL, L.L.C.
2296. CVS 6760 NJ, L.L.C.
2297. CVS 6766 VA, L.L.C.
2298. CVS 6769 NC, L.L.C.
2299. CVS 6780 IN, L.L.C.
2300. CVS 6789 IL, L.L.C.
2301. CVS 6796 MA, L.L.C.
2302. CVS 6801 FL, L.L.C.
2303. CVS 6810 MN, L.L.C.
2304. CVS 6812 OH, L.L.C.
2305. CVS 6816 General, Inc.
2306. CVS 6824 General, Inc.
2307. CVS 6834 General, Inc.
2308. CVS 684 IN, L.L.C.
2309. CVS 6843 FL, L.L.C.
2310. CVS 6852 VA, L.L.C.
2311. CVS 6853 FL, L.L.C.
2312. CVS 6855 FL, L.L.C.
2313. CVS 6858 MD, L.L.C.
2314. CVS 6860 FL, L.L.C.
2315. CVS 6861 GA, L.L.C.
2316. CVS 6867 NV, L.L.C.
2317. CVS 6869 DE, L.L.C.
2318. CVS 6872 NJ, L.L.C.
2319. CVS 6874 IN, L.L.C.
2320. CVS 6880 IN, L.L.C.
2321. CVS 6920 General, Inc.
2322. CVS 693 MA, L.L.C.
2323. CVS 6940 KY, L.L.C.
2324. CVS 6941 KY, L.L.C.
2325. CVS 6972 FL, L.L.C.
2326. CVS 6988 NC, L.L.C.
2327. CVS 6996 OH, L.L.C.
2328. CVS 7008 NC, L.L.C.
2329. CVS 7036, L.L.C.
2330. CVS 7044 General, Inc.
2331. CVS 7047, L.L.C.
2332. CVS 7053 NC, L.L.C.
2333. CVS 7057 NC, L.L.C.
2334. CVS 706 MA, L.L.C.
2335. CVS 7062 NC, L.L.C.
2336. CVS 7063 AL, L.L.C.
2337. CVS 7065 MS, L.L.C.
2338. CVS 7068 GA, L.L.C.
2339. CVS 7070 IL, L.L.C.
2340. CVS 7070 MS, L.L.C.
2341. CVS 7077 AL, L.L.C.
2342. CVS 7082 VA, L.L.C.
2343. CVS 709 FL, L.L.C.
2344. CVS 7092 General, Inc.
2345. CVS 7094 General, Inc.
2346. CVS 7097 OH, L.L.C.
2347. CVS 7098 WV, L.L.C.
2348. CVS 7105 NJ, L.L.C.
2349. CVS 7109 MA, L.L.C.
2350. CVS 7118 General, Inc.
2351. CVS 7119 General, Inc.
2352. CVS 7120 General, Inc.
2353. CVS 7121 OH, L.L.C.
2354. CVS 7124 WV, L.L.C.
2355. CVS 7125 IL, L.L.C.
2356. CVS 7127 FL, L.L.C.
2357. CVS 7129 FL, L.L.C.
2358. CVS 7130 FL, L.L.C.
2359. CVS 7133 FL, L.L.C.
2360. CVS 7134 IL, L.L.C.
2361. CVS 7142 IL, L.L.C.
2362. CVS 7144 TN, L.L.C.
2363. CVS 7147 General, Inc.
2364. CVS 7148 General, Inc.
2365. CVS 7148 NC, L.L.C.

2366. CVS 7149 General, Inc.
2367. CVS 7151 General, Inc.
2368. CVS 7153 General, Inc.
2369. CVS 7154 General, Inc.
2370. CVS 7155 AL, L.L.C.
2371. CVS 7156 General, Inc.
2372. CVS 7157 NC, L.L.C.
2373. CVS 7161 General, Inc.
2374. CVS 7162 General, Inc.
2375. CVS 7163 NC, L.L.C.
2376. CVS 7164 General, Inc.
2377. CVS 7166 IL, L.L.C.
2378. CVS 7167 IL, L.L.C.
2379. CVS 7170 IL, L.L.C.
2380. CVS 7173 FL, L.L.C.
2381. CVS 7174 FL, L.L.C.
2382. CVS 7178 FL, L.L.C.
2383. CVS 7179 AL, L.L.C.
2384. CVS 7180 AL, L.L.C.
2385. CVS 7190 NJ, L.L.C.
2386. CVS 7196 General, Inc.
2387. CVS 7198 General, Inc.
2388. CVS 7200, L.L.C.
2389. CVS 7214 GA, L.L.C.
2390. CVS 7215 AL, L.L.C.
2391. CVS 7217 AL, L.L.C.
2392. CVS 7222 General, Inc.
2393. CVS 7223 GA, L.L.C.
2394. CVS 7225 FL, L.L.C.
2395. CVS 7242 MD, L.L.C.
2396. CVS 7251 NV, L.L.C.
2397. CVS 7252 NV, L.L.C.
2398. CVS 7256 General, Inc.
2399. CVS 7261 WI, L.L.C.
2400. CVS 727 FL, L.L.C.
2401. CVS 7318 SC, L.L.C.
2402. CVS 7324 NC, L.L.C.
2403. CVS 7325 NC, L.L.C.
2404. CVS 7328 NC, L.L.C.
2405. CVS 7331 NC, L.L.C.
2406. CVS 7332, L.L.C.
2407. CVS 7344 NC, L.L.C.
2408. CVS 7350 NC, L.L.C.
2409. CVS 7351 SC, L.L.C.
2410. CVS 7354 NC, L.L.C.
2411. CVS 7381 NC, L.L.C.
2412. CVS 7382 NC, L.L.C.
2413. CVS 7388 SC, L.L.C.
2414. CVS 7397 SC, L.L.C.
2415. CVS 74 VA, L.L.C
2416. CVS 7420 NC, L.L.C.
2417. CVS 7500 NC, L.L.C.
2418. CVS 75004 NC, L.L.C.
2419. CVS 75005 NJ, L.L.C.
2420. CVS 75006 GA, L.L.C.
2421. CVS 7501 GA, L.L.C.
2422. CVS 75012 SC, L.L.C.
2423. CVS 75014 MI, L.L.C.
2424. CVS 75015 MI, L.L.C.
2425. CVS 75020 GA, L.L.C.
2426. CVS 75021 GA, L.L.C.
2427. CVS 75023 GA, L.L.C.
2428. CVS 75024 AL, L.L.C.
2429. CVS 75029 LA, L.L.C.
2430. CVS 7503 VA, L.L.C.
2431. CVS 75030 LA, L.L.C.
2432. CVS 75031 GA, L.L.C.
2433. CVS 7504 GA, L.L.C.
2434. CVS 75087 GA, L.L.C.
2435. CVS 7510 VA, L.L.C.
2436. CVS 75121 SC, L.L.C.
2437. CVS 75122 NC, L.L.C.
2438. CVS 75124 MI, L.L.C.
2439. CVS 75127 NC, L.L.C.
2440. CVS 75128 FL, L.L.C.
2441. CVS 75129 FL, L.L.C.
2442. CVS 75135 VA, L.L.C.
2443. CVS 75136 VA, L.L.C.
2444. CVS 75137 MD, L.L.C.
2445. CVS 75139 NJ, L.L.C.
2446. CVS 75144 RI, L.L.C.
2447. CVS 75147 VA, L.L.C.
2448. CVS 75148 VA, L.L.C.
2449. CVS 75149 WV, L.L.C.
2450. CVS 75151 OH, L.L.C.
2451. CVS 75156 NV, L.L.C.

2452. CVS 75157 MI, L.L.C.
2453. CVS 75159 NC, L.L.C.
2454. CVS 75160 SC, L.L.C.
2455. CVS 75161 AZ, L.L.C.
2456. CVS 75162 AZ, L.L.C.
2457. CVS 75163 GA, L.L.C.
2458. CVS 75164 FL, L.L.C.
2459. CVS 75165 GA, L.L.C.
2460. CVS 75177 FL, L.L.C.
2461. CVS 7518 VA, L.L.C.
2462. CVS 75180 FL, L.L.C.
2463. CVS 75181 AL, L.L.C.
2464. CVS 75182 GA, L.L.C.
2465. CVS 75183 GA, L.L.C.
2466. CVS 75184 FL, L.L.C.
2467. CVS 7519 MN, L.L.C.
2468. CVS 75191 NJ, L.L.C.
2469. CVS 75195 FL, L.L.C.
2470. CVS 75196 FL, L.L.C.
2471. CVS 75197 NC, L.L.C.
2472. CVS 75198 FL, L.L.C.
2473. CVS 75199 MI, L.L.C.
2474. CVS 75207 NJ, L.L.C.
2475. CVS 75208 TN, L.L.C.
2476. CVS 75215 SC, L.L.C.
2477. CVS 75216 NV, L.L.C.
2478. CVS 75219 MI, L.L.C.
2479. CVS 75229 AL, L.L.C.
2480. CVS 75230 OK, L.L.C.
2481. CVS 75232 OK, L.L.C.
2482. CVS 75235 RI, L.L.C.
2483. CVS 75236 NC, L.L.C.
2484. CVS 75239 NJ, L.L.C.
2485. CVS 7524 NC, L.L.C.
2486. CVS 75241 FL, L.L.C.
2487. CVS 75249 FL, L.L.C.
2488. CVS 75254 GA, L.L.C.
2489. CVS 75255 GA, L.L.C.
2490. CVS 75257 NJ, L.L.C.
2491. CVS 75260 VA, L.L.C.
2492. CVS 75262 TN, L.L.C.
2493. CVS 75269 MI, L.L.C.
2494. CVS 75275 TN, L.L.C.
2495. CVS 75280 NC, L.L.C.
2496. CVS 75282 GA, L.L.C.
2497. CVS 75283 GA, L.L.C.
2498. CVS 75284 GA, L.L.C.
2499. CVS 75286 GA, L.L.C.
2500. CVS 75293 FL, L.L.C.
2501. CVS 75294 FL, L.L.C.
2502. CVS 75296 FL, L.L.C.
2503. CVS 75297 VA, L.L.C.
2504. CVS 753 NY, L.L.C.
2505. CVS 75306 SC, L.L.C.
2506. CVS 75307 KS, L.L.C.
2507. CVS 75308 VA, L.L.C.
2508. CVS 75311 VA, L.L.C.
2509. CVS 75312 VA, L.L.C.
2510. CVS 75315 VA, L.L.C.
2511. CVS 75322 FL, L.L.C.
2512. CVS 75324 FL, L.L.C.
2513. CVS 75325 FL, L.L.C.
2514. CVS 75329 NJ, L.L.C.
2515. CVS 75330 MA, L.L.C.
2516. CVS 75334 FL, L.L.C.
2517. CVS 75335 FL, L.L.C.
2518. CVS 75348 NJ, L.L.C.
2519. CVS 75349 SC, L.L.C.
2520. CVS 75351 GA, L.L.C.
2521. CVS 75358 SC, L.L.C.
2522. CVS 75359 NC, L.L.C.
2523. CVS 75362 FL, L.L.C.
2524. CVS 75363 GA, L.L.C.
2525. CVS 75364 FL, L.L.C.
2526. CVS 75365 GA, L.L.C.
2527. CVS 75370 GA, L.L.C.
2528. CVS 75374 NJ, L.L.C.
2529. CVS 75377 NC, L.L.C.
2530. CVS 75378 NC, L.L.C.
2531. CVS 75379 GA, L.L.C.
2532. CVS 75380 GA, L.L.C.
2533. CVS 75381 FL, L.L.C.
2534. CVS 75389 RI, L.L.C.
2535. CVS 75390 NC, L.L.C.
2536. CVS 75391 NC, L.L.C.
2537. CVS 75393 DE, L.L.C.

2538. CVS 75395 FL, L.L.C.
2539. CVS 75405 DE, L.L.C.
2540. CVS 75408 FL, L.L.C.
2541. CVS 75412 MN, L.L.C.
2542. CVS 75414 TN, L.L.C.
2543. CVS 75415 NJ, L.L.C.
2544. CVS 75416 KY, L.L.C.
2545. CVS 75433 GA, L.L.C.
2546. CVS 75441 GA, L.L.C.
2547. CVS 75444 NV, L.L.C.
2548. CVS 75445 SC, L.L.C.
2549. CVS 75448 MA, L.L.C.
2550. CVS 75451 MI, L.L.C.
2551. CVS 75452 MI, L.L.C.
2552. CVS 75453 MI, L.L.C.
2553. CVS 75458 FL, L.L.C.
2554. CVS 7546 NC L.L.C.
2555. CVS 75461 AL, L.L.C.
2556. CVS 75462 FL, L.L.C.
2557. CVS 75466 NC, L.L.C.
2558. CVS 75467 MA, L.L.C.
2559. CVS 75468 TN, L.L.C.
2560. CVS 75479 FL, L.L.C.
2561. CVS 7548 NC, L.L.C.
2562. CVS 75480 FL, L.L.C.
2563. CVS 75482 FL, L.L.C.
2564. CVS 75485 NC, L.L.C.
2565. CVS 75486 KS, L.L.C.
2566. CVS 7549 MI, L.L.C.
2567. CVS 75491 WV, L.L.C.
2568. CVS 75494 MN, L.L.C.
2569. CVS 75498 DE, L.L.C.
2570. CVS 75499 DE, L.L.C.
2571. CVS 75502 VA, L.L.C.
2572. CVS 75503 GA, L.L.C.
2573. CVS 75507 NC, L.L.C.
2574. CVS 75508 MA, L.L.C.
2575. CVS 75514 NV, L.L.C.
2576. CVS 75530 FL, L.L.C.
2577. CVS 75531 FL, L.L.C.
2578. CVS 75535 FL, L.L.C.
2579. CVS 75536 GA, L.L.C.
2580. CVS 75545 NV, L.L.C.
2581. CVS 75549 VA, L.L.C.
2582. CVS 7555 NC, L.L.C.
2583. CVS 75550 VA, L.L.C.
2584. CVS 75552 VA, L.L.C.
2585. CVS 75555 VA, L.L.C.
2586. CVS 75558 FL, L.L.C.
2587. CVS 75560 NJ, L.L.C.
2588. CVS 75561 NJ, L.L.C.
2589. CVS 75562 VA, L.L.C.
2590. CVS 75563 MD, L.L.C.
2591. CVS 75565 VA, L.L.C.
2592. CVS 75566 RI, L.L.C.
2593. CVS 75567 WI, L.L.C.
2594. CVS 75568 VA, L.L.C.
2595. CVS 75569 GA, L.L.C.
2596. CVS 7557 VA, L.L.C.
2597. CVS 75570 SC, L.L.C.
2598. CVS 75571 NC, L.L.C.
2599. CVS 75572 NC, L.L.C.
2600. CVS 7558 VA, L.L.C.
2601. CVS 75580 FL, L.L.C.
2602. CVS 75581 DE, L.L.C.
2603. CVS 75583 MA, L.L.C.
2604. CVS 75584 MA, L.L.C.
2605. CVS 75586 RI, L.L.C.
2606. CVS 75589 KY, L.L.C.
2607. CVS 7559 Glen Raven, L.L.C.
2608. CVS 75590 MN, L.L.C.
2609. CVS 75591 NC, L.L.C.
2610. CVS 7561 VA, L.L.C.
2611. CVS 75613 FL, L.L.C.
2612. CVS 75615 FL, L.L.C.
2613. CVS 75616 FL, L.L.C.
2614. CVS 75618 MI, L.L.C.
2615. CVS 75619 NJ, L.L.C.
2616. CVS 75620 FL, L.L.C.
2617. CVS 75622 FL, L.L.C.
2618. CVS 75623 FL, L.L.C.
2619. CVS 75626 GA, L.L.C.
2620. CVS 75636 NV, L.L.C.
2621. CVS 75642 VA, L.L.C.
2622. CVS 7565 VA, L.L.C.
2623. CVS 75651 SC, L.L.C.

2624. CVS 75659 OK, L.L.C.
2625. CVS 7566 NC, L.L.C.
2626. CVS 75660 OK, L.L.C.
2627. CVS 75667 VA, L.L.C.
2628. CVS 75668 VA, L.L.C.
2629. CVS 75669 MA, L.L.C.
2630. CVS 75674 FL, L.L.C.
2631. CVS 75676 KY, L.L.C.
2632. CVS 75677 MN, L.L.C.
2633. CVS 75679 SC, L.L.C.
2634. CVS 7568 SC, L.L.C.
2635. CVS 75691 VA, L.L.C.
2636. CVS 75692 VA, L.L.C.
2637. CVS 75705 FL, L.L.C.
2638. CVS 75707 FL, L.L.C.
2639. CVS 75711 VA, L.L.C.
2640. CVS 75712 RI, L.L.C.
2641. CVS 75718 OH, L.L.C.
2642. CVS 75719 MN, L.L.C.
2643. CVS 7572 NC, L.L.C.
2644. CVS 75721 FL, L.L.C.
2645. CVS 7573 NC, L.L.C.
2646. CVS 75730 OK, L.L.C.
2647. CVS 75733 NV, L.L.C.
2648. CVS 75738 RI, L.L.C.
2649. CVS 75740 NJ, L.L.C.
2650. CVS 75743 NJ, L.L.C.
2651. CVS 75747 MN, L.L.C.
2652. CVS 75750 NC, L.L.C.
2653. CVS 75762 VA, L.L.C.
2654. CVS 75766 FL, L.L.C.
2655. CVS 75767 TN, L.L.C.
2656. CVS 75768 TN, L.L.C.
2657. CVS 7577 VA, L.L.C.
2658. CVS 75770 NC, L.L.C.
2659. CVS 75771 NC, L.L.C.
2660. CVS 75773 MA, L.L.C.
2661. CVS 75774 MA, L.L.C.
2662. CVS 75781 OK, L.L.C.
2663. CVS 75782 OK, L.L.C.
2664. CVS 75795 DE, L.L.C.
2665. CVS 75796 DE, L.L.C.
2666. CVS 75799 NJ, L.L.C.
2667. CVS 7581 VA, L.L.C.
2668. CVS 75816 FL, L.L.C.
2669. CVS 75821 MN, L.L.C.
2670. CVS 75849 NC, L.L.C.
2671. CVS 75851 TN, L.L.C.
2672. CVS 75852 TN, L.L.C.
2673. CVS 75866 MA, L.L.C.
2674. CVS 75867 RI, L.L.C.
2675. CVS 75870 FL, L.L.C.
2676. CVS 75883 FL, L.L.C.
2677. CVS 75884 VA, L.L.C.
2678. CVS 7589 VA, L.L.C.
2679. CVS 75896 MA, L.L.C.
2680. CVS 75905 NJ, L.L.C.
2681. CVS 75907 DE, L.L.C.
2682. CVS 75915 OK, L.L.C.
2683. CVS 7592 VA, L.L.C.
2684. CVS 75921 OK, L.L.C.
2685. CVS 75924 FL, L.L.C.
2686. CVS 75930 VA, L.L.C.
2687. CVS 75931 VA, L.L.C.
2688. CVS 75935 NV, L.L.C.
2689. CVS 75945 WI, L.L.C.
2690. CVS 75946 VA, L.L.C.
2691. CVS 75947 GA, L.L.C.
2692. CVS 75948 NC, L.L.C.
2693. CVS 75952 WI, L.L.C.
2694. CVS 75955 OK, L.L.C.
2695. CVS 75958 MN, L.L.C.
2696. CVS 75959 MN, L.L.C.
2697. CVS 75961 SC, L.L.C.
2698. CVS 7597 NC, L.L.C.
2699. CVS 75975 FL, L.L.C.
2700. CVS 75977 MN, L.L.C.
2701. CVS 75978 FL, L.L.C.
2702. CVS 75979 OH, L.L.C.
2703. CVS 75980 OH, L.L.C.
2704. CVS 75981 OH, L.L.C.
2705. CVS 75988 MN, L.L.C.
2706. CVS 75989 VA, L.L.C.
2707. CVS 75990 VA, L.L.C.
2708. CVS 75995 DE, L.L.C.
2709. CVS 7604 WV, L.L.C.

2710. CVS 7648 KY, L.L.C.
2711. CVS 7666 GA, L.L.C.
2712. CVS 7671 AL, L.L.C.
2713. CVS 770 FL, L.L.C.
2714. CVS 7701, L.L.C.
2715. CVS 7706 GA, L.L.C.
2716. CVS 7712 GA, L.L.C.
2717. CVS 7714 TN, L.L.C.
2718. CVS 7736 GA, L.L.C.
2719. CVS 7738 TN, L.L.C.
2720. CVS 7755 GA, L.L.C.
2721. CVS 7758 GA, L.L.C.
2722. CVS 7763 TN, L.L.C.
2723. CVS 7771 TN, L.L.C.
2724. CVS 7782 GA, L.L.C.
2725. CVS 7843 VA, L.L.C.
2726. CVS 7856 NJ, L.L.C.
2727. CVS 7882 NC, L.L.C.
2728. CVS 7885 GA, L.L.C.
2729. CVS 7888 GA, L.L.C.
2730. CVS 7927 GA, L.L.C.
2731. CVS 7936 MA, L.L.C.
2732. CVS 7973 FL, L.L.C.
2733. CVS 7974 GA, L.L.C.
2734. CVS 7980 FL, L.L.C.
2735. CVS 7997 OH, L.L.C.
2736. CVS 8002 MI, L.L.C.
2737. CVS 8003 MI, L.L.C.
2738. CVS 8009 MI, L.L.C.
2739. CVS 8013 MI, L.L.C.
2740. CVS 8034 MI, L.L.C.
2741. CVS 8038 MI, L.L.C.
2742. CVS 8039, L.L.C.
2743. CVS 8044 MI, L.L.C.
2744. CVS 8049 MI, L.L.C.
2745. CVS 8059 MI, L.L.C.
2746. CVS 8067 MI, L.L.C.
2747. CVS 8071 MI, L.L.C.
2748. CVS 8073 MI, L.L.C.
2749. CVS 8078 MI, L.L.C.
2750. CVS 8086 MI, L.L.C.
2751. CVS 8088 MI, L.L.C.
2752. CVS 8091 MI, L.L.C.
2753. CVS 810 MA, L.L.C.
2754. CVS 8103 MI, L.L.C.
2755. CVS 8112 MI, L.L.C.
2756. CVS 8121 MI, L.L.C.
2757. CVS 8123 MI, L.L.C.
2758. CVS 8129 MI, L.L.C.
2759. CVS 8131 MI, L.L.C.
2760. CVS 8133 MI, L.L.C.
2761. CVS 8141 MI, L.L.C.
2762. CVS 8165 MI, L.L.C.
2763. CVS 8190 MI, L.L.C.
2764. CVS 8191 MI, L.L.C.
2765. CVS 8207 MI, L.L.C.
2766. CVS 824 NJ, L.L.C.
2767. CVS 8246 MI, L.L.C.
2768. CVS 8271 MI, L.L.C.
2769. CVS 8271 Warren, L.L.C.
2770. CVS 8272 MI, L.L.C.
2771. CVS 8281 MD, L.L.C.
2772. CVS 8283 MI, L.L.C.
2773. CVS 8299 MI, L.L.C.
2774. CVS 8301 MI, L.L.C.
2775. CVS 8302 MI, L.L.C.
2776. CVS 8303 TN, L.L.C.
2777. CVS 8304 MI, L.L.C.
2778. CVS 8306 MI, L.L.C.
2779. CVS 8308 MI, L.L.C.
2780. CVS 8320 RI, L.L.C.
2781. CVS 8395 GA, L.L.C.
2782. CVS 8399 MI, L.L.C.
2783. CVS 8415 FL, L.L.C.
2784. CVS 8415 NE, L.L.C.
2785. CVS 8417 NC, L.L.C.
2786. CVS 8418 GA, L.L.C.
2787. CVS 8422 GA, L.L.C.
2788. CVS 8423 OH, L.L.C.
2789. CVS 8432 GA, L.L.C.
2790. CVS 8441 MA, L.L.C.
2791. CVS 8446 FL, L.L.C.
2792. CVS 8549 MI, L.L.C.
2793. CVS 8615 NE, L.L.C.
2794. CVS 862 NJ, L.L.C.
2795. CVS 863 NH, L.L.C.

2796. CVS 866 FL, L.L.C.
2797. CVS 8774 WI, L.L.C.
2798. CVS 8776 WI, L.L.C.
2799. CVS 8813 NV, L.L.C.
2800. CVS 8902 FL, L.L.C.
2801. CVS 8905 KY, L.L.C.
2802. CVS 8907 GA, L.L.C.
2803. CVS 8909 NC, L.L.C.
2804. CVS 8932 OH, L.L.C.
2805. CVS 8934 GA, L.L.C.
2806. CVS 8935 NC, L.L.C.
2807. CVS 8954 MS, L.L.C.
2808. CVS 8955 MS, L.L.C.
2809. CVS 8956 MS, L.L.C.
2810. CVS 8975 SC, L.L.C.
2811. CVS 8986 OK, L.L.C.
2812. CVS 8992 MS, L.L.C.
2813. CVS 8993 MS, L.L.C.
2814. CVS 8994 MS, L.L.C.
2815. CVS 8th Avenue, L.L.C.
2816. CVS 920 MA, L.L.C.
2817. CVS 921 IL, L.L.C.
2818. CVS 927 MI, L.L.C.
2819. CVS 932 FL, L.L.C.
2820. CVS 962 GA, L.L.C.
2821. CVS 9674 CA, LLC
2822. CVS 976 FL, L.L.C.
2823. CVS 9898 OH, L.L.C.
2824. CVS Accountable Care Organization Inc.
2825. CVS Adelphi, L.L.C.
2826. CVS Ahearn Pharmacy, L.L.C.
2827. CVS Ahearn Plaza Pharmacy, L.L.C.
2828. CVS AL Distribution, Inc.
2829. CVS AL Distribution, L.L.C.
2830. CVS Albany Central Avenue, L.L.C.
2831. CVS Albany, L.L.C.
2832. CVS Albertson, L.L.C.
2833. CVS Alhambra, L.P.
2834. CVS Allerton Avenue, L.L.C.
2835. CVS Alpharetta GA, Inc.
2836. CVS Amherst Road, L.L.C.
2837. CVS Amityville, L.L.C.
2838. CVS Amsterdam Avenue, L.L.C.
2839. CVS Anaheim CA, L.L.C.
2840. CVS AOC Corporation
2841. CVS AOC Services, L.L.C.
2842. CVS Arcadia, L.P.
2843. CVS Arclight, Inc.
2844. CVS Ardsley, L.L.C.
2845. CVS Arlington Heights, L.L.C.
2846. CVS Arnot Mall, L.L.C.
2847. CVS Atlanta GA, Inc.
2848. CVS Atlantic Avenue, L.L.C.
2849. CVS Atlantic Highlands, L.L.C.
2850. CVS Auburn Mall ME, L.L.C.
2851. CVS Auburndale, L.L.C.
2852. CVS Aurora, L.L.C.
2853. CVS Austin Drugs of Great Neck, L.L.C.
2854. CVS Austin Drugs of Merrick, L.L.C.
2855. CVS Austin Drugs of Plainview, L.L.C.
2856. CVS Avon Store, L.L.C.
2857. CVS Baldwin Merrick Road, L.L.C.
2858. CVS Baltimore Fayette, Inc.
2859. CVS Bath Congress, L.L.C.
2860. CVS Bay City 8207 MI, L.L.C.
2861. CVS Bay Shore, L.L.C.
2862. CVS Bayberry Bensalem, Inc.
2863. CVS Bayport, L.L.C.
2864. CVS Bayside Queens, L.L.C.
2865. CVS BDI, Inc.
2866. CVS Beauty Participações Ltda
2867. CVS Bell Boulevard, L.L.C.
2868. CVS Bellerose, L.L.C.
2869. CVS Bellmore Avenue, L.L.C.
2870. CVS Bensenville, L.L.C.
2871. CVS Benson NC, Inc.
2872. CVS Bergenfield, L.L.C.
2873. CVS Bergenline, L.L.C.
2874. CVS Bethesda Lawrenceville, Inc.
2875. CVS Bethesda, L.L.C.

2876. CVS Bethpage Broadway, L.L.C.
2877. CVS Big Apple, L.L.C.
2878. CVS Binghamton, L.L.C.
2879. CVS Black Horse, L.L.C.
2880. CVS Blasdell Drug, L.L.C.
2881. CVS Bleecker Street, L.L.C.
2882. CVS Bloomfield NJ, L.L.C.
2883. CVS Bohemia, L.L.C.
2884. CVS Bridgewater, L.L.C.
2885. CVS Brighton Lac DeVille, L.L.C.
2886. CVS Broadway Chicago, L.L.C.
2887. CVS Broadway Massapequa, L.L.C.
2888. CVS Bronx White Plains, L.L.C.
2889. CVS Bronx, L.L.C.
2890. CVS Bronxville Retailer, L.L.C.
2891. CVS Brooklyn 86th Street, L.L.C.
2892. CVS Brooklyn Eighteenth Avenue, L.L.C.
2893. CVS Brooklyn Kings Highway, L.L.C.
2894. CVS Brooklyn Store, L.L.C.
2895. CVS Brownsville, L.L.C.
2896. CVS Budd Lake, L.L.C.
2897. CVS Buena Park, L.P.
2898. CVS Buffalo Downtown, L.L.C.
2899. CVS Buffalo Spectrum Store, L.L.C.
2900. CVS Burnt Hills, L.L.C.
2901. CVS Cabot Holdings Inc.
2902. CVS Caldwell Cleveland, L.L.C.
2903. CVS Canfield OH, Inc.
2904. CVS Cape Elizabeth, L.L.C.
2905. CVS Card, Inc.
2906. CVS Care Concierge, LLC
2907. CVS Caremark Advanced Technology Pharmacy, L.L.C.
2908. CVS Caremark Charitable Trust, Inc.
2909. CVS Caremark Charity Classic, Inc.
2910. CVS Caremark Employee Relief Fund
2911. CVS Caremark Indemnity Ltd.
2912. CVS Caremark NI IT Operations Center Ltd.
2913. CVS Caremark Part D Services, L.L.C.
2914. CVS Caremark TN SUTA, LLC
2915. CVS Carmel Road Charlotte, Inc.
2916. CVS Carson, L.P.
2917. CVS Cedar Creek Commons, L.L.C.
2918. CVS Cedar Grove, L.L.C.
2919. CVS Cedar Lane, Inc.
2920. CVS Center, Inc.
2921. CVS Central Charlotte, Inc.
2922. CVS Central Islip, L.L.C.
2923. CVS Champlain Centre, L.L.C.
2924. CVS Charitable Trust, Inc
2925. CVS Charity Classic, Inc.
2926. CVS Charlotte, Inc.
2927. CVS Chatham Main Street, L.L.C.
2928. CVS Chenango Centre, L.L.C.
2929. CVS Cherry Hill, L.L.C.
2930. CVS Christopher Street, L.L.C.
2931. CVS Clairidge, L.L.C.
2932. CVS Clifton Crescent, L.L.C.
2933. CVS Closter Dock, L.L.C.
2934. CVS Clyde Park, Inc.
2935. CVS Cold Spring Road, L.L.C.
2936. CVS Columbia Turnpike, L.L.C.
2937. CVS Columbus OH, Inc.
2938. CVS Columbus Place, L.L.C.
2939. CVS Commerce Street, L.L.C.
2940. CVS Community Care, Inc.
2941. CVS Community Pharmacy Center For Excellence, Inc.
2942. CVS Corporation Foundation Program
2943. CVS Cortland, L.L.C.
2944. CVS Court St., L.L.C.
2945. CVS Cross County Store, L.L.C.
2946. CVS Crystal Derry, L.L.C.
2947. CVS Crystal Run, L.L.C.
2948. CVS Cuthbert Boulevard, L.L.C.
2949. CVS Danbury Padanaram, Inc.

2950. CVS Data, Inc.
2951. CVS Deer Park, L.L.C.
2952. CVS Dekalb Norristown, Inc.
2953. CVS Delmar Drug, L.L.C.
2954. CVS Detroit 8275, L.L.C.
2955. CVS Detroit Grand River, Inc.
2956. CVS Dix Hills, L.L.C.
2957. CVS Doubletree, L.L.C.
2958. CVS Douglaston, L.L.C.
2959. CVS Downey, L.P.
2960. CVS Dunkirk Marketplace, L.L.C.
2961. CVS Dunkirk Store, L.L.C.
2962. CVS Durham 7042, L.L.C.
2963. CVS Durham, Inc.
2964. CVS Eagle Rock, L.L.C.
2965. CVS East 149th Street, L.L.C.
2966. CVS East 21st Street, L.L.C.
2967. CVS East 23rd Street, L.L.C.
2968. CVS East 86th, L.L.C.
2969. CVS East Aurora, L.L.C.
2970. CVS East Main Street, L.L.C.
2971. CVS East Rockaway, L.L.C.
2972. CVS East Windsor 3161, L.L.C.
2973. CVS Eastchester Plaza, L.L.C.
2974. CVS Edwardsville IL, L.L.C.
2975. CVS EGL 103rd Jacksonville FL, L.L.C.
2976. CVS EGL 1076 TX, L.L.C.
2977. CVS EGL 107th Miami FL, L.L.C.
2978. CVS EGL 107th Southwest FL, L.L.C.
2979. CVS EGL 109th Summerfield FL, L.L.C.
2980. CVS EGL 111th Kansas City MO, Inc.
2981. CVS EGL 112th Miami FL, L.L.C.
2982. CVS EGL 115th Avondale AZ, L.L.C.
2983. CVS EGL 119th Northwest FL, L.L.C.
2984. CVS EGL 119th Oklahoma, Inc.
2985. CVS EGL 11th Huntsville TX, L.P.
2986. CVS EGL 11th Lake Wales FL, L.L.C.
2987. CVS EGL 122nd MacArthur OK, Inc.
2988. CVS EGL 128 FL, L.L.C.
2989. CVS EGL 128th Miami FL, L.L.C.
2990. CVS EGL 12th Phoenix AZ, L.L.C.
2991. CVS EGL 1313 TX, L.L.C.
2992. CVS EGL 1326 LA, L.L.C.
2993. CVS EGL 1331 TX, L.L.C.
2994. CVS EGL 1336 AL, L.L.C.
2995. CVS EGL 136th Fort Lauderdale FL, L.L.C.
2996. CVS EGL 136th Miami FL, L.L.C.
2997. CVS EGL 13th Gainesville FL, L.L.C.
2998. CVS EGL 13th Northwest FL, L.L.C.
2999. CVS EGL 13th Saint Cloud FL, L.L.C.
3000. CVS EGL 1460 FL, L.L.C.
3001. CVS EGL 1462 TX, L.L.C.
3002. CVS EGL 14th Bradenton FL, L.L.C.
3003. CVS EGL 14th Leesburg FL, L.L.C.
3004. CVS EGL 150 TX, L.L.C.
3005. CVS EGL 1512 LA, L.L.C.
3006. CVS EGL 152nd Miami FL, L.L.C.
3007. CVS EGL 152nd Southwest FL, L.L.C.
3008. CVS EGL 1580 TX, L.L.C.
3009. CVS EGL 15th Immokalee FL, L.L.C.
3010. CVS EGL 15th Oklahoma City OK, Inc.
3011. CVS EGL 15th Panama City FL, L.L.C.
3012. CVS EGL 1620 TX, L.L.C.
3013. CVS EGL 1634 TX, L.L.C.
3014. CVS EGL 1635 FL, L.L.C.
3015. CVS EGL 163rd North Miami FL, L.L.C.

3016. CVS EGL 1644 FL, L.L.C.
3017. CVS EGL 1647 LA, L.L.C.
3018. CVS EGL 164th May OK, Inc.
3019. CVS EGL 1651 TX, L.L.C.
3020. CVS EGL 1652 LA, L.L.C.
3021. CVS EGL 1655 FL, L.L.C.
3022. CVS EGL 1660 FL, L.L.C.
3023. CVS EGL 16th Baseline AZ, L.L.C.
3024. CVS EGL 16th Northwest FL, L.L.C.
3025. CVS EGL 1722 FL, L.L.C.
3026. CVS EGL 1723 FL, L.L.C.
3027. CVS EGL 1724 FL, L.L.C.
3028. CVS EGL 1725 FL, L.L.C.
3029. CVS EGL 1726 FL, L.L.C.
3030. CVS EGL 1728 OK, L.L.C.
3031. CVS EGL 1729 FL, L.L.C.
3032. CVS EGL 173 TX, L.L.C.
3033. CVS EGL 1730 FL, L.L.C.
3034. CVS EGL 1732 AL, L.L.C.
3035. CVS EGL 1734 LA, L.L.C.
3036. CVS EGL 1736 FL, L.L.C.
3037. CVS EGL 1738 FL, L.L.C.
3038. CVS EGL 1739 FL, L.L.C.
3039. CVS EGL 1749 FL, L.L.C.
3040. CVS EGL 1765 TX, L.L.C.
3041. CVS EGL 1766 TX, L.L.C.
3042. CVS EGL 1779 FL, L.L.C.
3043. CVS EGL 1783 TX, L.L.C.
3044. CVS EGL 1793 TX, L.L.C.
3045. CVS EGL 1794 LA, L.L.C.
3046. CVS EGL 17th Southeast FL, L.L.C.
3047. CVS EGL 1827 TX, L.L.C.
3048. CVS EGL 183rd Opa Locka FL, L.L.C.
3049. CVS EGL 185th Northeast FL, L.L.C.
3050. CVS EGL 186th Hialeah FL, L.L.C.
3051. CVS EGL 18th Monroe LA, Inc.
3052. CVS EGL 19 Pinellas FL, L.L.C.
3053. CVS EGL 192 MO, L.L.C.
3054. CVS EGL 19th Happy Valley AZ, L.L.C.
3055. CVS EGL 19th Memphis TX, L.P.
3056. CVS EGL 19th North FL, L.L.C.
3057. CVS EGL 1st Humbel TX, L.P.
3058. CVS EGL 1st Kaplan LA, Inc.
3059. CVS EGL 1st Lake City FL, L.L.C.
3060. CVS EGL 1st Sanford FL, L.L.C.
3061. CVS EGL 1st Wadsworth CO CVS, L.L.C.
3062. CVS EGL 200 Ocala FL, L.L.C.
3063. CVS EGL 20th Vero Beach FL, L.L.C.
3064. CVS EGL 21st Covington LA, Inc.
3065. CVS EGL 222 LA, L.L.C.
3066. CVS EGL 22nd Southwest FL, L.L.C.
3067. CVS EGL 2366 FL, L.L.C.
3068. CVS EGL 23rd Independence MO, Inc.
3069. CVS EGL 23rd Northwest OK, Inc.
3070. CVS EGL 23rd Oklahoma, Inc.
3071. CVS EGL 23rd Panama City FL, L.L.C.
3072. CVS EGL 248th Miami FL, L.L.C.
3073. CVS EGL 24th Indian AZ, L.L.C.
3074. CVS EGL 25th Gulfport MS, Inc.
3075. CVS EGL 267 FL, L.L.C.
3076. CVS EGL 26th Fort Lauderdale FL, L.L.C.
3077. CVS EGL 27th Miami FL, L.L.C.
3078. CVS EGL 284 FL, L.L.C.
3079. CVS EGL 29th Hialeah FL, L.L.C.
3080. CVS EGL 2nd Delray Beach FL, L.L.C.
3081. CVS EGL 301 Dade City FL, L.L.C.
3082. CVS EGL 312 Augustine FL, L.L.C.
3083. CVS EGL 3278 FL, L.L.C.
3084. CVS EGL 328 FL, L.L.C.
3085. CVS EGL 34 OK, L.L.C.
3086. CVS EGL 34th Lubbock TX, L.P.

3087. CVS EGL 34th Ocala FL, L.L.C.
3088. CVS EGL 34th St Petersburg FL, L.L.C.
3089. CVS EGL 35 N Austin TX, L.P.
3090. CVS EGL 358 FL, L.L.C.
3091. CVS EGL 35th Evans CO CVS, L.L.C.
3092. CVS EGL 3624 FL, L.L.C.
3093. CVS EGL 3637 FL, L.L.C.
3094. CVS EGL 3669 TX, L.L.C.
3095. CVS EGL 37th St Petersburg FL, L.L.C.
3096. CVS EGL 384 TX, L.L.C.
3097. CVS EGL 3rd Jacksonville Beach FL, L.L.C.
3098. CVS EGL 3rd New Smyrna Beach FL, L.L.C.
3099. CVS EGL 3rd Saint Pete FL, L.L.C.
3100. CVS EGL 403 FL, L.L.C.
3101. CVS EGL 405 FL, L.L.C.
3102. CVS EGL 408 FL, L.L.C.
3103. CVS EGL 40th Miami FL, L.L.C.
3104. CVS EGL 40th Northwest FL, L.L.C.
3105. CVS EGL 40th Street FL, L.L.C.
3106. CVS EGL 41 Sarasota FL, L.L.C.
3107. CVS EGL 41st Miami FL, L.L.C.
3108. CVS EGL 42nd Miami FL, L.L.C.
3109. CVS EGL 430 FL, L.L.C.
3110. CVS EGL 439 AL, L.L.C.
3111. CVS EGL 43rd Northwest FL, L.L.C.
3112. CVS EGL 441 Lake Worth FL, L.L.C.
3113. CVS EGL 441 Ocala FL, L.L.C.
3114. CVS EGL 46 Loop TX, L.P.
3115. CVS EGL 475 AL, L.L.C.
3116. CVS EGL 486 FL, L.L.C.
3117. CVS EGL 49th Hialeah FL, L.L.C.
3118. CVS EGL 49th Pinellas Park FL, L.L.C.
3119. CVS EGL 49th Saint Petersburg FL, L.L.C.
3120. CVS EGL 4th Chickasha OK, Inc.
3121. CVS EGL 4th Oklahoma City OK, Inc.
3122. CVS EGL 4th Pueblo CO CVS, L.L.C.
3123. CVS EGL 4th Saint Petersburg FL, L.L.C.
3124. CVS EGL 504 FL, L.L.C.
3125. CVS EGL 50th Lubbock TX, L.P.
3126. CVS EGL 537 FL, L.L.C.
3127. CVS EGL 53rd Bradenton FL, L.L.C.
3128. CVS EGL 54 New Port Richey FL, L.L.C.
3129. CVS EGL 546 MS, L.L.C.
3130. CVS EGL 54th Saint Petersburg FL, L.L.C.
3131. CVS EGL 5624 MO, L.L.C.
3132. CVS EGL 568 LA, L.L.C.
3133. CVS EGL 571 FL, L.L.C.
3134. CVS EGL 59th Glendale AZ, L.L.C.
3135. CVS EGL 5th Boca Raton FL, L.L.C.
3136. CVS EGL 5th Miami Beach FL, L.L.C.
3137. CVS EGL 60th Hialeah FL, L.L.C.
3138. CVS EGL 61st Galveston TX, L.P.
3139. CVS EGL 63rd Kansas City MO, Inc.
3140. CVS EGL 64 Bradenton FL, L.L.C.
3141. CVS EGL 66th Northwest FL, L.L.C.
3142. CVS EGL 66th Saint Petersburg FL, L.L.C.
3143. CVS EGL 66th Street North FL, L.L.C.
3144. CVS EGL 67th Hialeah FL, L.L.C.
3145. CVS EGL 68th Thomas AZ, L.L.C.
3146. CVS EGL 68th West Hialeah FL, L.L.C.
3147. CVS EGL 6th Panama City FL, L.L.C.

3148. CVS EGL 6th South FL, L.L.C.
3149. CVS EGL 6th Winter Haven FL, L.L.C.
3150. CVS EGL 756 TX, L.L.C.
3151. CVS EGL 75th Bethany AZ, L.L.C.
3152. CVS EGL 75th Gainesville FL, L.L.C.
3153. CVS EGL 75th Houston TX, L.P.
3154. CVS EGL 7894 FL, L.L.C.
3155. CVS EGL 78th Seminole FL, L.L.C.
3156. CVS EGL 7927 FL, L.L.C.
3157. CVS EGL 7958 FL, L.L.C.
3158. CVS EGL 7th Miami FL, L.L.C.
3159. CVS EGL 82nd Lubbock TX, L.P.
3160. CVS EGL 8383 FL, L.L.C.
3161. CVS EGL 83rd Glendale AZ, L.L.C.
3162. CVS EGL 88th Miami FL, L.L.C.
3163. CVS EGL 88th Street FL, L.L.C.
3164. CVS EGL 8th Ave Hialeah FL, L.L.C.
3165. CVS EGL 8th Miami FL, L.L.C.
3166. CVS EGL 8th Palmetto FL, L.L.C.
3167. CVS EGL 8th Southwest FL, L.L.C.
3168. CVS EGL 8th Street FL, L.L.C.
3169. CVS EGL 90 West FL, L.L.C.
3170. CVS EGL 908 FL, L.L.C.
3171. CVS EGL 951 Naples FL, L.L.C.
3172. CVS EGL 97th Miami FL, L.L.C.
3173. CVS EGL 98th Lubbock TX, L.P.
3174. CVS EGL 99th Phoenix AZ, L.L.C.
3175. CVS EGL 9th Naples FL, L.L.C.
3176. CVS EGL 9th North FL, L.L.C.
3177. CVS EGL 9th Pensacola FL, L.L.C.
3178. CVS EGL 9th Saint Petersburg FL, L.L.C.
3179. CVS EGL Abshier Belleview FL, L.L.C.
3180. CVS EGL Academy Seagull NM, L.L.C.
3181. CVS EGL Admiral New Iberia LA, Inc.
3182. CVS EGL Airline Baton Rouge LA, Inc.
3183. CVS EGL Airline Corpus Christi TX, L.P.
3184. CVS EGL Airline Destrehan LA, Inc.
3185. CVS EGL Airline Drive TX, L.P.
3186. CVS EGL Airline Gonzales LA, Inc.
3187. CVS EGL Airline La Place LA, Inc.
3188. CVS EGL Airline Metairie LA, Inc.
3189. CVS EGL Airport Austin TX, L.P.
3190. CVS EGL Airport Naples FL, L.L.C.
3191. CVS EGL Alabama Properties, Inc.
3192. CVS EGL Alafaya Orlando FL, L.L.C.
3193. CVS EGL Alameda Denver CO CVS, L.L.C.
3194. CVS EGL Alameda Parkway CO CVS, L.L.C.
3195. CVS EGL Aldine Mail TX, L.P.
3196. CVS EGL Aldine Westfield Spring TX, L.P.
3197. CVS EGL Alexander Plant City FL, L.L.C.
3198. CVS EGL Alma Chandler AZ, L.L.C.
3199. CVS EGL Aloma Winter FL, L.L.C.
3200. CVS EGL Alpha Dallas TX, L.P.
3201. CVS EGL Altamonte Springs FL, L.L.C.
3202. CVS EGL Alton Miami Beach FL, L.L.C.
3203. CVS EGL Andrews Fort Lauderdale FL, L.L.C.
3204. CVS EGL Angleton TX, L.P.
3205. CVS EGL Antoine Houston TX, L.P.

3206. CVS EGL Apalachee Tallahassee FL, L.L.C.
3207. CVS EGL Apalachicola FL, L.L.C.
3208. CVS EGL Apollo Beach FL, L.L.C.
3209. CVS EGL Apopka Vineland FL, L.L.C.
3210. CVS EGL Archer Gainesville FL, L.L.C.
3211. CVS EGL Arlington Jacksonville FL, L.L.C.
3212. CVS EGL Armenia Tampa FL, L.L.C.
3213. CVS EGL Atlantic Beach FL, L.L.C.
3214. CVS EGL Atlantic Boulevard FL, L.L.C.
3215. CVS EGL Atlantic Cocoa Beach FL, L.L.C.
3216. CVS EGL Atlantic Daytona FL, L.L.C.
3217. CVS EGL Atlantic FL, L.L.C.
3218. CVS EGL Atlantic Jacksonville FL, L.L.C.
3219. CVS EGL Atlantic Neptune Beach FL, L.L.C.
3220. CVS EGL Augustine Road FL, L.L.C.
3221. CVS EGL Austin Harry TX, L.P.
3222. CVS EGL Avenida Lady Lake FL, L.L.C.
3223. CVS EGL Aventura FL, L.L.C.
3224. CVS EGL Avenue A TX, L.P.
3225. CVS EGL Avenue J Galveston TX, L.P.
3226. CVS EGL Avondale Dysart AZ, L.L.C.
3227. CVS EGL Ayers Corpus Christi TX, L.P.
3228. CVS EGL Ayers TX, L.P.
3229. CVS EGL Azalea AL, Inc.
3230. CVS EGL Bandera Road TX, L.P.
3231. CVS EGL Bandera San Antonio TX, L.P.
3232. CVS EGL Barataria Marrero LA, Inc.
3233. CVS EGL Barker Cypress TX, L.P.
3234. CVS EGL Barksdale LA, Inc.
3235. CVS EGL Barrow Abilene TX, L.P.
3236. CVS EGL Barry Road MO, Inc.
3237. CVS EGL Bartow FL, L.L.C.
3238. CVS EGL Bartram Park FL, L.L.C.
3239. CVS EGL Baseline Gilbert AZ, L.L.C.
3240. CVS EGL Baseline Tempe AZ, L.L.C.
3241. CVS EGL Baton Rouge LA, Inc.
3242. CVS EGL Bay Area TX, L.P.
3243. CVS EGL Bay City TX, L.P.
3244. CVS EGL Bay Clearwater FL, L.L.C.
3245. CVS EGL Bay Largo FL, L.L.C.
3246. CVS EGL Bay Meadows FL, L.L.C.
3247. CVS EGL Bay St. Louis MS, Inc.
3248. CVS EGL Bayport Seabrook TX, L.P.
3249. CVS EGL Bayshore Dunedin FL, L.L.C.
3250. CVS EGL Beach Boulevard FL, L.L.C.
3251. CVS EGL Beaumont TX, L.P.
3252. CVS EGL Bee Caves TX, L.P.
3253. CVS EGL Bee Ridge Sarasota FL, L.L.C.
3254. CVS EGL Belcher Clearwater FL, L.L.C.
3255. CVS EGL Belcher Largo FL, L.L.C.
3256. CVS EGL Bell Amarillo TX, L.P.
3257. CVS EGL Bell Glendale AZ, L.L.C.
3258. CVS EGL Bell Houston TX, L.P.
3259. CVS EGL Bell Surprise AZ, L.L.C.
3260. CVS EGL Bellaire Blvd TX, L.P.
3261. CVS EGL Belle Glade FL, L.L.C.

3262. CVS EGL Belle Palm Coast FL, L.L.C.
3263. CVS EGL Belleview Littleton CO CVS, L.L.C.
3264. CVS EGL Belleview Plaquemine LA, Inc.
3265. CVS EGL Belt Saint Joseph MO, Inc.
3266. CVS EGL Beltline Garland TX, L.P.
3267. CVS EGL Belville Daytona FL, L.L.C.
3268. CVS EGL Beneva Road FL, L.L.C.
3269. CVS EGL Biscayne Boulevard, L.L.C.
3270. CVS EGL Biscayne FL, L.L.C.
3271. CVS EGL Biscayne Miami FL, L.L.C.
3272. CVS EGL Bissonnet Houston TX, L.P.
3273. CVS EGL Bissonnet Kirkwood TX, L.P.
3274. CVS EGL Blanco Road TX, L.P.
3275. CVS EGL Blanding Jacksonville FL, L.L.C.
3276. CVS EGL Blanding Middleburg FL, L.L.C.
3277. CVS EGL Blanding Orange Park FL, L.L.C.
3278. CVS EGL Blichton Ocala FL, L.L.C.
3279. CVS EGL Bloomingdale Valrico FL, L.L.C.
3280. CVS EGL Blossom Orlando FL, L.L.C.
3281. CVS EGL Bogalusa LA, Inc.
3282. CVS EGL Boggy Creek FL, L.L.C.
3283. CVS EGL Bolton Alexandria LA, Inc.
3284. CVS EGL Bonham Paris TX, L.P.
3285. CVS EGL Bossier City LA, Inc.
3286. CVS EGL Boulevard Rayne LA, Inc.
3287. CVS EGL Boyette Riverview, L.L.C.
3288. CVS EGL Bradenton FL, L.L.C.
3289. CVS EGL Brair Forest TX, L.P.
3290. CVS EGL Brandon FL, L.L.C.
3291. CVS EGL Brenham TX, L.P.
3292. CVS EGL Brevard Arcadia FL, L.L.C.
3293. CVS EGL Briar Drive KS, Inc.
3294. CVS EGL Briarcliff Austin TX, L.P.
3295. CVS EGL Bridge Hobe Sound FL, L.L.C.
3296. CVS EGL Britt Jensen FL, L.L.C.
3297. CVS EGL Broadmoor MS, Inc.
3298. CVS EGL Broadway Garland TX, L.P.
3299. CVS EGL Broadway Gladewater TX, L.P.
3300. CVS EGL Broadway Tampa, L.L.C.
3301. CVS EGL Broadway Tempe AZ, L.L.C.
3302. CVS EGL Broadway Tucson AZ, L.L.C.
3303. CVS EGL Broadway Tyler TX, L.P.
3304. CVS EGL Brookside MO, Inc.
3305. CVS EGL Brooksville FL, L.L.C.
3306. CVS EGL Broomfield CO CVS, L.L.C.
3307. CVS EGL Broward Lauderdale FL, L.L.C.
3308. CVS EGL Brown Arlington TX, L.P.
3309. CVS EGL Brunswick FL, L.L.C.
3310. CVS EGL Bryan Dairy Seminole FL, L.L.C.
3311. CVS EGL Bryan TX, L.P.
3312. CVS EGL Bryant Irvin Fort Worth TX, L.P.
3313. CVS EGL Buckingham Richardson TX, L.P.

3314. CVS EGL Buckner Dallas TX, L.P.
3315. CVS EGL Buffalo Gap Abilene TX, L.P.
3316. CVS EGL Bullard Parkway FL, L.L.C.
3317. CVS EGL Burleigh Tavares FL, L.L.C.
3318. CVS EGL Burnett Austin TX, L.P.
3319. CVS EGL Camelback Phoenix AZ, L.L.C.
3320. CVS EGL Cameron Lafayette LA, Inc.
3321. CVS EGL Cameron Scott LA, Inc.
3322. CVS EGL Camino Boca Raton FL, L.L.C.
3323. CVS EGL Camino Real TX, L.P.
3324. CVS EGL Camp Bowie Fort Worth TX, L.P.
3325. CVS EGL Camp Bowie TX, L.P.
3326. CVS EGL Camp Clarke TX, L.P.
3327. CVS EGL Camp Lowell AZ, L.L.C.
3328. CVS EGL Camp TX, L.P.
3329. CVS EGL Campbell Dallas TX, L.P.
3330. CVS EGL Canal New Orleans LA, Inc.
3331. CVS EGL Canal Thibodaux LA, Inc.
3332. CVS EGL Candelaria NM, L.L.C.
3333. CVS EGL Canoe St. Cloud FL, L.L.C.
3334. CVS EGL Cape Coral Pkwy FL, L.L.C.
3335. CVS EGL Capital Circle FL, L.L.C.
3336. CVS EGL Capital Tallahassee FL, L.L.C.
3337. CVS EGL Carefree Cave Creek AZ, L.L.C.
3338. CVS EGL Caroline Milton FL, L.L.C.
3339. CVS EGL Carrier Grand Prairie TX, L.P.
3340. CVS EGL Carrollton New Orleans LA, Inc.
3341. CVS EGL Carrollwood Tampa FL, L.L.C.
3342. CVS EGL Cartwright Mesquite TX, L.P.
3343. CVS EGL Cartwright Missouri City TX, L.P.
3344. CVS EGL Cedar Breaks TX, L.P.
3345. CVS EGL Cedar Park TX, L.P.
3346. CVS EGL Cedar Ridge TX, L.P.
3347. CVS EGL Centennial CO CVS, L.L.C.
3348. CVS EGL Central Avenue NM, L.L.C.
3349. CVS EGL Central Bedford TX, L.P.
3350. CVS EGL Central Florida, L.L.C.
3351. CVS EGL Central McKinney TX, L.P.
3352. CVS EGL Central Parkway FL, L.L.C.
3353. CVS EGL Central Petersburg FL, L.L.C.
3354. CVS EGL Centre Hereford TX, L.P.
3355. CVS EGL Cerrillos NM, L.L.C.
3356. CVS EGL Chalmette LA, Inc.
3357. CVS EGL Chambers Denver CO CVS, L.L.C.
3358. CVS EGL Champion Forest TX, L.P.
3359. CVS EGL Chandler Phoenix AZ, L.L.C.
3360. CVS EGL Charity Abbeville LA, Inc.
3361. CVS EGL Chateau Kenner LA, Inc.
3362. CVS EGL Cheney Titusville FL, L.L.C.
3363. CVS EGL Chipley FL, L.L.C.
3364. CVS EGL Choctaw OK, Inc.
3365. CVS EGL Church Livingston TX, L.P.
3366. CVS EGL Cinco Ranch TX, L.P.

3367. CVS EGL Clark Road, L.L.C.
3368. CVS EGL Clark Sarasota FL, L.L.C.
3369. CVS EGL Classen Oklahoma City OK, Inc.
3370. CVS EGL Clearlake Cocoa FL, L.L.C.
3371. CVS EGL Clearwater FL, L.L.C.
3372. CVS EGL Clearwater Largo FL, L.L.C.
3373. CVS EGL Cleburne TX, L.P.
3374. CVS EGL Clermont FL, L.L.C.
3375. CVS EGL Cleveland Avenue, L.L.C.
3376. CVS EGL Cleveland Fort Myers FL, L.L.C.
3377. CVS EGL Clint Moore Boca Raton FL, L.L.C.
3378. CVS EGL Clubview Levelland TX, L.P.
3379. CVS EGL Clute TX, L.P.
3380. CVS EGL Coalton Broomfield CO CVS, L.L.C.
3381. CVS EGL Cockrell Hill TX, L.P.
3382. CVS EGL Coit Plano TX, L.P.
3383. CVS EGL Coit Richardson TX, L.P.
3384. CVS EGL Colfax Denver CO CVS, L.L.C.
3385. CVS EGL Colfax Lakewood CO CVS, L.L.C.
3386. CVS EGL College Beaumont TX, L.P.
3387. CVS EGL College Collins CO CVS, L.L.C.
3388. CVS EGL College Hills San Angelo TX, L.P.
3389. CVS EGL College Park Conroe TX, L.P.
3390. CVS EGL Colleyville TX, L.P.
3391. CVS EGL Collins Avenue FL, L.L.C.
3392. CVS EGL Collins North Miami FL, L.L.C.
3393. CVS EGL Colonial Golden FL, L.L.C.
3394. CVS EGL Colonial Myers FL, L.L.C.
3395. CVS EGL Colonial Orlando FL, L.L.C.
3396. CVS EGL Colonial Winter Garden FL, L.L.C.
3397. CVS EGL Colorado Springs CO CVS, L.L.C.
3398. CVS EGL Commerce Ardmore OK, Inc.
3399. CVS EGL Commercial 18th FL, L.L.C.
3400. CVS EGL Commercial Lauderdale FL, L.L.C.
3401. CVS EGL Congress Austin TX, L.P.
3402. CVS EGL Congress Boynton Beach FL, L.L.C.
3403. CVS EGL Congress Lake Worth FL, L.L.C.
3404. CVS EGL Congress Street TX, L.P.
3405. CVS EGL Coors Boulevard NM, L.L.C.
3406. CVS EGL Coral Miami FL, L.L.C.
3407. CVS EGL Corpus Christi TX, L.P.
3408. CVS EGL Cortez Boulevard FL, L.L.C.
3409. CVS EGL Cortez Bradenton FL, L.L.C.
3410. CVS EGL Cortez FL, L.L.C.
3411. CVS EGL Cottage Mobile AL, Inc.
3412. CVS EGL Countryway Tampa FL, L.L.C.
3413. CVS EGL County Dunedin FL, L.L.C.
3414. CVS EGL County Line Ridgeland MS, Inc.
3415. CVS EGL County Orange Park FL, L.L.C.

3416. CVS EGL Courtenay Merritt FL, L.L.C.
3417. CVS EGL Covington LA, Inc.
3418. CVS EGL Crandon Key Biscayne FL, L.L.C.
3419. CVS EGL Crawfordville FL, L.L.C.
3420. CVS EGL Cresswell Opelousas LA, Inc.
3421. CVS EGL Crockett Palestine TX, L.P.
3422. CVS EGL Cross Timbers TX, L.P.
3423. CVS EGL Crowley TX, L.P.
3424. CVS EGL Crown Bonita Springs FL, L.L.C.
3425. CVS EGL Culebra San Antonio TX, L.P.
3426. CVS EGL Cullen Pearland TX, L.P.
3427. CVS EGL Curry Ford Orlando FL, L.L.C.
3428. CVS EGL Curry Ford Road FL, L.L.C.
3429. CVS EGL Custer Frisco TX, L.P.
3430. CVS EGL Cypress Gardens FL, L.L.C.
3431. CVS EGL Cypress North TX, L.P.
3432. CVS EGL Cypress Poinciana FL, L.L.C.
3433. CVS EGL Cypress West Monroe LA, Inc.
3434. CVS EGL Cypress Winter Haven FL, L.L.C.
3435. CVS EGL Dale Mabry Tampa FL, L.L.C.
3436. CVS EGL Dania Beach FL, L.L.C.
3437. CVS EGL Daniels Fort Myers, L.L.C.
3438. CVS EGL Daphne AL, Inc.
3439. CVS EGL Davenport FL, L.L.C.
3440. CVS EGL Davie Lauderdale FL, L.L.C.
3441. CVS EGL Davis N Richland Hills TX, L.P.
3442. CVS EGL Davis Pensacola FL, L.L.C.
3443. CVS EGL Daytona FL, L.L.C.
3444. CVS EGL De Land FL, L.L.C.
3445. CVS EGL De Zavala San Antonio TX, L.P.
3446. CVS EGL Decatur FL, L.L.C.
3447. CVS EGL Decker Baytown TX, L.P.
3448. CVS EGL Deerfield Beach FL, L.L.C.
3449. CVS EGL Denham Springs LA, Inc.
3450. CVS EGL Denton Fort Worth TX, L.P.
3451. CVS EGL Desoto TX, L.P.
3452. CVS EGL Dickinson TX, L.P.
3453. CVS EGL Dixie Highway FL, L.L.C.
3454. CVS EGL Dixie Homestead FL, L.L.C.
3455. CVS EGL Dixie Lake Worth FL, L.L.C.
3456. CVS EGL Dixie Miami FL, L.L.C.
3457. CVS EGL Dixie South FL, L.L.C.
3458. CVS EGL Dixie West FL, L.L.C.
3459. CVS EGL Dixie West Palm FL, L.L.C.
3460. CVS EGL Dorado Craig TX, L.P.
3461. CVS EGL Dowlen TX, L.P.
3462. CVS EGL Downing Denver CO CVS, L.L.C.
3463. CVS EGL Drake Fort Collins CO CVS, L.L.C.
3464. CVS EGL Dry Creek Aurora CO CVS, L.L.C.
3465. CVS EGL Duck Creek TX, L.P.
3466. CVS EGL Dulles Road TX, L.P.
3467. CVS EGL Dunlap Phoenix AZ, L.L.C.
3468. CVS EGL Dunn Jacksonville FL, L.L.C.
3469. CVS EGL Dunnellon FL, L.L.C.

3470. CVS EGL Duval Key West FL, L.L.C.
3471. CVS EGL Dysart Goodyear AZ, L.L.C.
3472. CVS EGL E 20th Houston TX, L.P.
3473. CVS EGL E Amarillo TX, L.P.
3474. CVS EGL E Arapaho Richardson TX, L.P.
3475. CVS EGL E Arkansas Arlington TX, L.P.
3476. CVS EGL E Belt Line Cedar Hill TX, L.P.
3477. CVS EGL E Broadway Sweetwater TX, L.P.
3478. CVS EGL E Commerce Brownwood TX, L.P.
3479. CVS EGL E End North Marshall TX, L.P.
3480. CVS EGL E Irving TX, L.P.
3481. CVS EGL E Lancaster Fort Worth TX, L.P.
3482. CVS EGL E Loop 304 Crockett TX, L.P.
3483. CVS EGL E Lufkin TX, L.P.
3484. CVS EGL E Main Allen TX, L.P.
3485. CVS EGL E Main Grand Prairie TX, L.P.
3486. CVS EGL E Main Whitehouse TX, L.P.
3487. CVS EGL E Mockingbird Dallas TX, L.P.
3488. CVS EGL E Northwest Dallas TX, L.P.
3489. CVS EGL E Pipeline Bedford TX, L.P.
3490. CVS EGL E Riverside Austin TX, L.P.
3491. CVS EGL E Southlake TX, L.P.
3492. CVS EGL E Tidwell Houston TX, L.P.
3493. CVS EGL E Tyler Athens TX, L.P.
3494. CVS EGL E US Hwy 287 Midlothian TX, L.P.
3495. CVS EGL Eagle Nest Hialeah FL, L.L.C.
3496. CVS EGL East Atlantic FL, L.L.C.
3497. CVS EGL East Camelback AZ, L.L.C.
3498. CVS EGL East Colonial Drive FL, L.L.C.
3499. CVS EGL East Danforth OK, Inc.
3500. CVS EGL East Fowler FL, L.L.C.
3501. CVS EGL East Hinson FL, L.L.C.
3502. CVS EGL East Jester Houston TX, L.P.
3503. CVS EGL East Lake FL, L.L.C.
3504. CVS EGL East Oak FL, L.L.C.
3505. CVS EGL East Palatka FL, L.L.C.
3506. CVS EGL East Park Arlington TX, L.P.
3507. CVS EGL East Pass Gulfport MS, Inc.
3508. CVS EGL Eastex Beaumont TX, L.P.
3509. CVS EGL Edgewater Orlando FL, L.L.C.
3510. CVS EGL Edmond OK, Inc.
3511. CVS EGL Ehrlich Tampa FL, L.L.C.
3512. CVS EGL Eiland Zephyrhills FL, L.L.C.
3513. CVS EGL Eisenhower Loveland CO, L.L.C.
3514. CVS EGL El Salido TX, L.P.
3515. CVS EGL Elam Balch Springs TX, L.P.
3516. CVS EGL Eldridge Houston TX, L.P.
3517. CVS EGL Eldridge Road TX, L.P.
3518. CVS EGL Elkcam Deltona FL, L.L.C.
3519. CVS EGL Elliot Arizona AZ, L.L.C.
3520. CVS EGL Ellison Drive NM, L.L.C.

3521. CVS EGL Emerson Palm Bay FL, L.L.C.
3522. CVS EGL Erie Ellenton FL, L.L.C.
3523. CVS EGL Estero Fort Myers FL, L.L.C.
3524. CVS EGL Everhart TX, L.P.
3525. CVS EGL Fairfield Pensacola FL, L.L.C.
3526. CVS EGL Fay Cocoa FL, L.L.C.
3527. CVS EGL Federal Boynton FL, L.L.C.
3528. CVS EGL Federal Broward FL, L.L.C.
3529. CVS EGL Federal Deerfield FL, L.L.C.
3530. CVS EGL Federal Delray Beach FL, L.L.C.
3531. CVS EGL Federal Denver CO CVS, L.L.C.
3532. CVS EGL Federal Fort Pierce FL, L.L.C.
3533. CVS EGL Federal Hollywood FL, L.L.C.
3534. CVS EGL Federal Pompano FL, L.L.C.
3535. CVS EGL Federal Stuart FL, L.L.C.
3536. CVS EGL Ferguson Dallas TX, L.P.
3537. CVS EGL Ferguson Road TX, L.P.
3538. CVS EGL Ferris Waxahachie TX, L.P.
3539. CVS EGL Fielder Arlington TX, L.P.
3540. CVS EGL First Bradenton FL, L.L.C.
3541. CVS EGL FL Wright AZ, L.L.C.
3542. CVS EGL Flagler Miami FL, L.L.C.
3543. CVS EGL Flamingo Hollywood FL, L.L.C.
3544. CVS EGL Flamingo South FL, L.L.C.
3545. CVS EGL Florabranch FL, L.L.C.
3546. CVS EGL Florence Casa AZ, L.L.C.
3547. CVS EGL Florida Baton Rouge LA, Inc.
3548. CVS EGL Florida Lakeland FL, L.L.C.
3549. CVS EGL Florida Tampa FL, L.L.C.
3550. CVS EGL Florida, L.L.C.
3551. CVS EGL Flowood MS, Inc.
3552. CVS EGL Fm 1821 Mineral Wells TX, L.P.
3553. CVS EGL FM 1960 E Humble TX, L.P.
3554. CVS EGL FM 1960 Road TX, L.P.
3555. CVS EGL FM 2100 Crosby TX, L.P.
3556. CVS EGL Fm 3009 Schertz TX, L.P.
3557. CVS EGL FM 407 Lewisville TX, L.P.
3558. CVS EGL FM 528 TX, L.P.
3559. CVS EGL FM 529 Houston TX, L.P.
3560. CVS EGL FM Round TX, L.P.
3561. CVS EGL FM West TX, L.P.
3562. CVS EGL Foley AL, Inc.
3563. CVS EGL Fondren Houston TX, L.P.
3564. CVS EGL Ford Orlando FL, L.L.C.
3565. CVS EGL Forest Dallas TX, L.P.
3566. CVS EGL Forest Hill Blvd FL, L.L.C.
3567. CVS EGL Forest Hill Fort Worth TX, L.P.
3568. CVS EGL Forest Hill Palm FL, L.L.C.
3569. CVS EGL Forest Lane TX, L.P.
3570. CVS EGL Forest MS, Inc.
3571. CVS EGL Forest Spring TX, L.P.
3572. CVS EGL Forney TX, L.P.
3573. CVS EGL Fort Walton Beach FL, L.L.C.

3574. CVS EGL Fountain Hills AZ, L.L.C.
3575. CVS EGL Fountain Murray CO CVS, L.L.C.
3576. CVS EGL Fowler Tampa FL, L.L.C.
3577. CVS EGL Frankford Dallas TX, L.P.
3578. CVS EGL Freeport TX, L.P.
3579. CVS EGL Friendswood TX, L.P.
3580. CVS EGL Fruitville Sarasota FL, L.L.C.
3581. CVS EGL Fry Katy TX, L.P.
3582. CVS EGL Fry Little York TX, L.P.
3583. CVS EGL Fuqua Houston TX, L.P.
3584. CVS EGL Fuqua Street TX, L.P.
3585. CVS EGL Gainesville FL, L.L.C.
3586. CVS EGL Garden Titusville FL, L.L.C.
3587. CVS EGL Garland Dallas TX, L.P.
3588. CVS EGL Garland TX, L.P.
3589. CVS EGL Garth Baytown TX, L.P.
3590. CVS EGL Gattis School Round Rock TX, L.P.
3591. CVS EGL Gause Boulevard LA, Inc.
3592. CVS EGL Gause Slidell LA, Inc.
3593. CVS EGL Gears Houston TX, L.P.
3594. CVS EGL General Meyer LA, Inc.
3595. CVS EGL Georgetown TX, L.P.
3596. CVS EGL Georgia Amarillo TX, L.P.
3597. CVS EGL Georgia Bogalusa LA, Inc.
3598. CVS EGL Gessner Houston TX, L.P.
3599. CVS EGL Gibsonton Riverview FL, L.L.C.
3600. CVS EGL Glages Boca Raton FL, L.L.C.
3601. CVS EGL Glenbrook Clermont FL, L.L.C.
3602. CVS EGL Gloria Clewiston FL, L.L.C.
3603. CVS EGL Golden Naples FL, L.L.C.
3604. CVS EGL Golf Links AZ, L.L.C.
3605. CVS EGL Government Baton Rouge LA, Inc.
3606. CVS EGL Granada Ormond Beach FL, L.L.C.
3607. CVS EGL Granbury TX, L.P.
3608. CVS EGL Grand Caillou Houma LA, Inc.
3609. CVS EGL Grand Prairie TX, L.P.
3610. CVS EGL Grandview MO, Inc.
3611. CVS EGL Grapevine N Richland Hills TX, L.P.
3612. CVS EGL Greeley CO CVS, L.L.C.
3613. CVS EGL Green Cove Springs FL, L.L.C.
3614. CVS EGL Green Oaks TX, L.P.
3615. CVS EGL Greenville Ste 140 Dallas TX, L.P.
3616. CVS EGL Greenwell Baton Rouge LA, Inc.
3617. CVS EGL Greenwell Springs LA, Inc.
3618. CVS EGL Greenwood MS, Inc.
3619. CVS EGL Griffin Cooper FL, L.L.C.
3620. CVS EGL Grogans Mill Spring TX, L.P.
3621. CVS EGL Guadalupe Austin TX, L.P.
3622. CVS EGL Guadalupe Street TX, L.P.
3623. CVS EGL Gulf Beach Pensacola FL, L.L.C.
3624. CVS EGL Gulf Boulevard FL, L.L.C.
3625. CVS EGL Gulf Breeze Pkwy FL, L.L.C.
3626. CVS EGL Gulf Indian Rocks FL, L.L.C.

3627. CVS EGL Gulfbreeze Parkway FL, L.L.C.
3628. CVS EGL Gulfport Boulevard FL, L.L.C.
3629. CVS EGL Gulfshores AL, Inc.
3630. CVS EGL Gunn Highway FL, L.L.C.
3631. CVS EGL Gunn Tampa FL, L.L.C.
3632. CVS EGL Haily Pueblo CO CVS, L.L.C.
3633. CVS EGL Hall Johnson Grapevine TX, L.P.
3634. CVS EGL Hammerly Houston TX, L.P.
3635. CVS EGL Hammock Miami FL, L.L.C.
3636. CVS EGL Hammond LA, Inc.
3637. CVS EGL Hampden Aurora CO CVS, L.L.C.
3638. CVS EGL Hancock Bridge FL, L.L.C.
3639. CVS EGL Hancock Clermont FL, L.L.C.
3640. CVS EGL Happy Valley AZ, L.L.C.
3641. CVS EGL Harding Miami FL, L.L.C.
3642. CVS EGL Hardy Hattiesburg MS, Inc.
3643. CVS EGL Harris Red Oak TX, L.P.
3644. CVS EGL Harvey LA, Inc.
3645. CVS EGL Hawthorne FL, L.L.C.
3646. CVS EGL Hebron Carrolton TX, L.P.
3647. CVS EGL Hedgecoxe Plano TX, L.P.
3648. CVS EGL Henderson Boulevard FL, L.L.C.
3649. CVS EGL Henderson Tampa FL, L.L.C.
3650. CVS EGL Hialeah Drive FL, L.L.C.
3651. CVS EGL Hiawassee Orlando FL, L.L.C.
3652. CVS EGL Hickory Creek TX, L.P.
3653. CVS EGL High Springs FL, L.L.C.
3654. CVS EGL Highland Madison MS, Inc.
3655. CVS EGL Highland Road LA, Inc.
3656. CVS EGL Highway 77 TX, L.P.
3657. CVS EGL Hillsboro Coconut FL, L.L.C.
3658. CVS EGL Hillsborough Charlotte FL, L.L.C.
3659. CVS EGL Hillsborough FL, L.L.C.
3660. CVS EGL Hillsborough Tampa FL, L.L.C.
3661. CVS EGL Himes Tampa FL, L.L.C.
3662. CVS EGL Hollywood Blvd FL, L.L.C.
3663. CVS EGL Hollywood FL, L.L.C.
3664. CVS EGL Hollywood Shreveport LA, Inc.
3665. CVS EGL Holzwarth TX, L.P.
3666. CVS EGL Horizon Rockwall TX, L.P.
3667. CVS EGL Houston 6 South TX, L.P.
3668. CVS EGL Houston North, L.P.
3669. CVS EGL Houston Street TX, L.P.
3670. CVS EGL Houston TX, L.P.
3671. CVS EGL Howard Tampa FL, L.L.C.
3672. CVS EGL Hudson FL, L.L.C.
3673. CVS EGL Huebner Road TX, L.P.
3674. CVS EGL Huebner San Antonio TX, L.P.
3675. CVS EGL Hunters Creek Orlando FL, L.L.C.
3676. CVS EGL Hwy 1 Donaldsonville LA, Inc.
3677. CVS EGL Hwy 1 Fort Pierce FL, L.L.C.
3678. CVS EGL Hwy 1 Lucie FL, L.L.C.
3679. CVS EGL Hwy 1 Palm Beach FL, L.L.C.

3680. CVS EGL Hwy 1 Raceland LA, Inc.
3681. CVS EGL Hwy 1 Rockledge FL, L.L.C.
3682. CVS EGL Hwy 1 Vero Beach FL, L.L.C.
3683. CVS EGL Hwy 152 Mustang OK, Inc.
3684. CVS EGL Hwy 17 Casselberry FL, L.L.C.
3685. CVS EGL Hwy 171 Lake Charles LA, Inc.
3686. CVS EGL Hwy 181 Floresville TX, L.P.
3687. CVS EGL Hwy 19 Clearwater FL, L.L.C.
3688. CVS EGL Hwy 19 Crystal River FL, L.L.C.
3689. CVS EGL Hwy 19 Eustis FL, L.L.C.
3690. CVS EGL Hwy 19 Meridian MS, Inc.
3691. CVS EGL Hwy 19 North FL, L.L.C.
3692. CVS EGL Hwy 19 Port Richey FL, L.L.C.
3693. CVS EGL Hwy 190 Mandeville LA, Inc.
3694. CVS EGL Hwy 20 Interlachen FL, L.L.C.
3695. CVS EGL Hwy 20 Niceville FL, L.L.C.
3696. CVS EGL Hwy 24 Independence MO, Inc.
3697. CVS EGL Hwy 27 Haines City FL, L.L.C.
3698. CVS EGL Hwy 27 Sebring FL, L.L.C.
3699. CVS EGL Hwy 271 Gilmer TX, L.P.
3700. CVS EGL Hwy 28 Pineville LA, Inc.
3701. CVS EGL Hwy 281 San Antonio TX, L.P.
3702. CVS EGL Hwy 377 Fort Worth TX, L.P.
3703. CVS EGL Hwy 40 Silver Springs FL, L.L.C.
3704. CVS EGL Hwy 441 Alachua FL, L.L.C.
3705. CVS EGL Hwy 441 Mount Dora FL, L.L.C.
3706. CVS EGL Hwy 49 Gulfport MS, Inc.
3707. CVS EGL Hwy 524 Cocoa FL, L.L.C.
3708. CVS EGL Hwy 59 N Bowie TX, L.P.
3709. CVS EGL Hwy 6 North TX, L.P.
3710. CVS EGL Hwy 6 Sugar Land TX, L.P.
3711. CVS EGL Hwy 7 Lauderdale FL, L.L.C.
3712. CVS EGL Hwy 70 Bradenton FL, L.L.C.
3713. CVS EGL Hwy 84 Slaton TX, L.P.
3714. CVS EGL Hwy 90 Milton FL, L.L.C.
3715. CVS EGL Hwy 90 Morgan City LA, Inc.
3716. CVS EGL Hwy 92 Lakeland FL, L.L.C.
3717. CVS EGL Hwy 98 Destin FL, L.L.C.
3718. CVS EGL Hwy 98 Lakeland FL, L.L.C.
3719. CVS EGL Hwy 98 Panama FL, L.L.C.
3720. CVS EGL Hwy A1A Palm FL, L.L.C.
3721. CVS EGL Hwy Lake Placid FL, L.L.C.
3722. CVS EGL Hymeadow Austin TX, L.P.

3723. CVS EGL Imperial Bonita FL, L.L.C.
3724. CVS EGL Ina Tucson AZ, L.L.C.
3725. CVS EGL Independence Plano TX, L.P.
3726. CVS EGL Independence Shawnee OK, Inc.
3727. CVS EGL Independence TX, L.P.
3728. CVS EGL Indian Scottsdale AZ, L.L.C.
3729. CVS EGL Indian Trace FL, L.L.C.
3730. CVS EGL Indiana Arvada CO CVS, L.L.C.
3731. CVS EGL Indiantown Jupiter FL, L.L.C.
3732. CVS EGL International Drive FL, L.L.C.
3733. CVS EGL International Mary FL, L.L.C.
3734. CVS EGL International Orlando FL, L.L.C.
3735. CVS EGL Irlo Kissimmee FL, L.L.C.
3736. CVS EGL Irving TX, L.P.
3737. CVS EGL Irvington Houston TX, L.P.
3738. CVS EGL Irvington Tucson AZ, L.L.C.
3739. CVS EGL Ives Dairy Miami FL, L.L.C.
3740. CVS EGL Jacksboro Fort Worth TX, L.P.
3741. CVS EGL Jacksboro Wichita Falls TX, L.P.
3742. CVS EGL Jackson Alexandria LA, Inc.
3743. CVS EGL Jackson MS, Inc.
3744. CVS EGL Jacksonville FL, L.L.C.
3745. CVS EGL Jasper FL, L.L.C.
3746. CVS EGL Jefferson Baton Rouge LA, Inc.
3747. CVS EGL Jensen Beach FL, L.L.C.
3748. CVS EGL Jester Austin TX, L.P.
3749. CVS EGL Jog Boynton Beach FL, L.L.C.
3750. CVS EGL Jog Greenacres FL, L.L.C.
3751. CVS EGL Jog Lake Worth FL, L.L.C.
3752. CVS EGL John Young Orlando FL, L.L.C.
3753. CVS EGL Johnson Mission KS, Inc.
3754. CVS EGL Johnston Lafayette LA, Inc.
3755. CVS EGL Jones Houston TX, L.P.
3756. CVS EGL Jones Maltsberger San Antonio TX, L.P.
3757. CVS EGL Jones Road TX, L.P.
3758. CVS EGL Juan Tabo NM, L.L.C.
3759. CVS EGL Juno Beach FL, L.L.C.
3760. CVS EGL Jupiter Plano TX, L.P.
3761. CVS EGL Kaliste Lafayette LA, Inc.
3762. CVS EGL Kansas City KS, Inc.
3763. CVS EGL Kathleen Road FL, L.L.C.
3764. CVS EGL Katy TX, L.P.
3765. CVS EGL Kaufman TX, L.P.
3766. CVS EGL Kenner LA, Inc.
3767. CVS EGL Keystone Heights FL, L.L.C.
3768. CVS EGL King Seguin TX, L.P.
3769. CVS EGL Kings Pierce FL, L.L.C.
3770. CVS EGL Kingsland TX, L.P.
3771. CVS EGL Kingwood Humble TX, L.P.
3772. CVS EGL Kingwood TX, L.P.
3773. CVS EGL Kipling Coal Mine CO CVS, L.L.C.
3774. CVS EGL Kipling Littleton CO CVS, L.L.C.
3775. CVS EGL Kirby Houston TX, L.P.
3776. CVS EGL Kirkman FL, L.L.C.
3777. CVS EGL Kissimmee FL, L.L.C.
3778. CVS EGL Kosciusko MS, Inc.

3779. CVS EGL Kuykendahl TX, L.P.
3780. CVS EGL La Canada Oro AZ, L.L.C.
3781. CVS EGL Lafayette LA, Inc.
3782. CVS EGL Lake Austin TX, L.P.
3783. CVS EGL Lake Butler FL, L.L.C.
3784. CVS EGL Lake North Palm FL, L.L.C.
3785. CVS EGL Lake Pickett FL, L.L.C.
3786. CVS EGL Lake Taylor TX, L.P.
3787. CVS EGL Lake Underhill FL, L.L.C.
3788. CVS EGL Lake Weir Ocala FL, L.L.C.
3789. CVS EGL Lake Worth FL, L.L.C.
3790. CVS EGL Lake Worth Fort Worth TX, L.P.
3791. CVS EGL Lake Worth Road FL, L.L.C.
3792. CVS EGL Lakeland FL, L.L.C.
3793. CVS EGL Lakeland Highlands FL, L.L.C.
3794. CVS EGL Lakewood CO CVS, L.L.C.
3795. CVS EGL Lamar Paris TX, L.P.
3796. CVS EGL Land O Lakes FL, L.L.C.
3797. CVS EGL Lantana FL, L.L.C.
3798. CVS EGL Lantana Lake Worth FL, L.L.C.
3799. CVS EGL Lauderdale FL, L.L.C.
3800. CVS EGL Laurel MS, Inc.
3801. CVS EGL Lavon Garland TX, L.P.
3802. CVS EGL Lawton OK, Inc.
3803. CVS EGL Leavenworth KS, Inc.
3804. CVS EGL Lebanon Frisco TX, L.P.
3805. CVS EGL Lecanto Beverly FL, L.L.C.
3806. CVS EGL Lee Lawton OK, Inc.
3807. CVS EGL Lee Lehigh Acres FL, L.L.C.
3808. CVS EGL Lee Orlando FL, L.L.C.
3809. CVS EGL Lees Summit MO, Inc.
3810. CVS EGL Leesburg FL, L.L.C.
3811. CVS EGL Lemmon Dallas TX, L.P.
3812. CVS EGL Lenexa KS, Inc.
3813. CVS EGL Leopard TX, L.P.
3814. CVS EGL Lewis New Iberia LA, Inc.
3815. CVS EGL Lexington Missouri City TX, L.P.
3816. CVS EGL Lexington Sugar Land TX, L.P.
3817. CVS EGL Liberty MO, Inc.
3818. CVS EGL Lindsay Gilbert AZ, L.L.C.
3819. CVS EGL Linebaugh Tampa FL, L.L.C.
3820. CVS EGL Little Elm TX, L.P.
3821. CVS EGL Little Hudson FL, L.L.C.
3822. CVS EGL Lomans Ford TX, L.P.
3823. CVS EGL Long Beach MS, Inc.
3824. CVS EGL Long Point Houston TX, L.P.
3825. CVS EGL Longboat Key FL, L.L.C.
3826. CVS EGL Longmont CO CVS, L.L.C.
3827. CVS EGL Longwood FL, L.L.C.
3828. CVS EGL Loop Alvin TX, L.P.
3829. CVS EGL Losoya San Antonio TX, L.P.
3830. CVS EGL Louetta Houston TX, L.P.
3831. CVS EGL Louetta Spring TX, L.P.
3832. CVS EGL Louisiana Properties, Inc.
3833. CVS EGL Lovers Lane TX, L.P.
3834. CVS EGL Lowell Boulevard CO CVS, L.L.C.
3835. CVS EGL Lubbock Lamesa TX, L.P.
3836. CVS EGL Lubbock TX, L.P.
3837. CVS EGL Lumsden Brandon, L.L.C.
3838. CVS EGL Lumsden Road FL, L.L.C.

3839. CVS EGL Mabank TX, L.P.
3840. CVS EGL Macarthur OK, Inc.
3841. CVS EGL Macclenney FL, L.L.C.
3842. CVS EGL Macdill Tampa FL, L.L.C.
3843. CVS EGL Madison Tampa FL, L.L.C.
3844. CVS EGL Magee MS, Inc.
3845. CVS EGL Magnolia FL, L.L.C.
3846. CVS EGL Main Apopka FL, L.L.C.
3847. CVS EGL Main Avon Park FL, L.L.C.
3848. CVS EGL Main Baker LA, Inc.
3849. CVS EGL Main Bushnell FL, L.L.C.
3850. CVS EGL Main Dallas TX, L.P.
3851. CVS EGL Main FL, L.L.C.
3852. CVS EGL Main Franklin LA, Inc.
3853. CVS EGL Main Gainesville FL, L.L.C.
3854. CVS EGL Main Galliano LA, Inc.
3855. CVS EGL Main Inverness FL, L.L.C.
3856. CVS EGL Main Kansas City MO, Inc.
3857. CVS EGL Main Kerrville TX, L.P.
3858. CVS EGL Main Lewisville TX, L.P.
3859. CVS EGL Main Liberty TX, L.P.
3860. CVS EGL Main Martinville LA, Inc.
3861. CVS EGL Main Mesa AZ, L.L.C.
3862. CVS EGL Main Norman OK, Inc.
3863. CVS EGL Main Opelousas LA, Inc.
3864. CVS EGL Main Street TX, L.P.
3865. CVS EGL Main The Colony TX, L.P.
3866. CVS EGL Main Wildwood FL, L.L.C.
3867. CVS EGL Main Windsor CO CVS, L.L.C.
3868. CVS EGL Main Winnfield LA, Inc.
3869. CVS EGL Malabar Palm Bay FL, L.L.C.
3870. CVS EGL Manatee Beach FL, L.L.C.
3871. CVS EGL Manatee Bradenton FL, L.L.C.
3872. CVS EGL Mandalay Ave FL, L.L.C.
3873. CVS EGL Mansfield Fort Worth TX, L.P.
3874. CVS EGL Mansfield Shreveport LA, Inc.
3875. CVS EGL Mansfield TX, L.P.
3876. CVS EGL Maplewood Sulphur LA, Inc.
3877. CVS EGL Marco Island FL, L.L.C.
3878. CVS EGL Margate FL, L.L.C.
3879. CVS EGL Margate Pompano FL, L.L.C.
3880. CVS EGL Marianna FL, L.L.C.
3881. CVS EGL Maricamp Ocala FL, L.L.C.
3882. CVS EGL Market Street TX, L.P.
3883. CVS EGL Market Stuart FL, L.L.C.
3884. CVS EGL Marsh Lane TX, L.P.
3885. CVS EGL Marshall Howard TX, L.P.
3886. CVS EGL Martin Downs FL, L.L.C.
3887. CVS EGL Martin Greenville MS, Inc.
3888. CVS EGL Martin Luther King OK, Inc.
3889. CVS EGL Marty Street KS, Inc.
3890. CVS EGL Mary Esther FL, L.L.C.
3891. CVS EGL Mason Cypress TX, L.P.
3892. CVS EGL Mass Port Richey FL, L.L.C.
3893. CVS EGL Matlock Arlington TX, L.P.
3894. CVS EGL May Oklahoma, Inc.
3895. CVS EGL McCall Englewood FL, L.L.C.

3896. CVS EGL McCart Fort Worth TX, L.P.
3897. CVS EGL McComb MS, Inc.
3898. CVS EGL McDermott Plano TX, L.P.
3899. CVS EGL McDowell Mesa AZ, L.L.C.
3900. CVS EGL McKellips Mesa AZ, L.L.C.
3901. CVS EGL McMullen Booth FL, L.L.C.
3902. CVS EGL Meadowbrook Fort TX, L.P.
3903. CVS EGL Medical San Antonio TX, L.P.
3904. CVS EGL Meeting Place FL, L.L.C.
3905. CVS EGL Memorial Drive TX, L.P.
3906. CVS EGL Memorial Lakeland FL, L.L.C.
3907. CVS EGL Menaul Eubank NM, L.L.C.
3908. CVS EGL Merritt Island FL, L.L.C.
3909. CVS EGL Mesa AZ, L.L.C.
3910. CVS EGL Mesa Houston TX, L.P.
3911. CVS EGL Mesquite TX, L.P.
3912. CVS EGL Metairie Road LA, Inc.
3913. CVS EGL Metcalf KS, Inc.
3914. CVS EGL Meyer Street TX, L.P.
3915. CVS EGL Miami 56th FL, L.L.C.
3916. CVS EGL Miami Beach FL, L.L.C.
3917. CVS EGL Miami Dix FL, L.L.C.
3918. CVS EGL Miami FL, L.L.C.
3919. CVS EGL Military Delray FL, L.L.C.
3920. CVS EGL Military Flores TX, L.P.
3921. CVS EGL Military Palm Beach FL, L.L.C.
3922. CVS EGL Military Pineville LA, Inc.
3923. CVS EGL Military Trail Jupiter FL, L.L.C.
3924. CVS EGL Military West Palm Beach FL, L.L.C.
3925. CVS EGL Mills Miami FL, L.L.C.
3926. CVS EGL Milwaukee TX, L.P.
3927. CVS EGL Minden LA, Inc.
3928. CVS EGL Miramar Dykes FL, L.L.C.
3929. CVS EGL Miramar FL, L.L.C.
3930. CVS EGL Miramar Hollywood FL, L.L.C.
3931. CVS EGL Miramar Indialantic FL, L.L.C.
3932. CVS EGL Miramar Parkway FL, L.L.C.
3933. CVS EGL Miromar Estero FL, L.L.C.
3934. CVS EGL Mississippi Aurora CO CVS, L.L.C.
3935. CVS EGL Mississippi Properties, Inc.
3936. CVS EGL Missouri Ave FL, L.L.C.
3937. CVS EGL Missouri Properties, Inc.
3938. CVS EGL Mizner Boca FL, L.L.C.
3939. CVS EGL Mobile Highway FL, L.L.C.
3940. CVS EGL Mobile Pensacola FL, L.L.C.
3941. CVS EGL Monroe Tallahassee FL, L.L.C.
3942. CVS EGL Montgomery FL, L.L.C.
3943. CVS EGL Montgomery NM, L.L.C.
3944. CVS EGL Monument Saint Joe FL, L.L.C.
3945. CVS EGL Moore OK, Inc.
3946. CVS EGL Moreau Marksville LA, Inc.
3947. CVS EGL Moss Lafayette LA, Inc.
3948. CVS EGL Municipal Drive FL, L.L.C.
3949. CVS EGL Mur Len Olathe KS, Inc.
3950. CVS EGL Murphy TX, L.P.
3951. CVS EGL N 18th Waco TX, L.P.

3952. CVS EGL N Beach Fort Worth TX, L.P.
3953. CVS EGL N Bluegrove Lancaster TX, L.P.
3954. CVS EGL N Carrier Grand Prairie TX, L.P.
3955. CVS EGL N Central Dallas TX, L.P.
3956. CVS EGL N Denton Tap Coppell TX, L.P.
3957. CVS EGL N Frazier Conroe TX, L.P.
3958. CVS EGL N Galloway Mesquite TX, L.P.
3959. CVS EGL N Greer Pittsburg TX, L.P.
3960. CVS EGL N I 35 Denton TX, L.P.
3961. CVS EGL N Industrial Bedford TX, L.P.
3962. CVS EGL N Josey Carrollton TX, L.P.
3963. CVS EGL N Judge Ely Abilene TX, L.P.
3964. CVS EGL N Lamar Austin TX, L.P.
3965. CVS EGL N Macarthur Irving TX, L.P.
3966. CVS EGL N Main Pearland TX, L.P.
3967. CVS EGL N Main Vidor TX, L.P.
3968. CVS EGL N Mccoy New Boston TX, L.P.
3969. CVS EGL N Nacogdoches TX, L.P.
3970. CVS EGL N New Waco TX, L.P.
3971. CVS EGL N Richmond Wharton TX, L.P.
3972. CVS EGL N Saint Marys Beeville TX, L.P.
3973. CVS EGL N Story Irving TX, L.P.
3974. CVS EGL N Tarrant N Richland Hills TX, L.P.
3975. CVS EGL N Walnut Creek Mansfield TX, L.P.
3976. CVS EGL N Willis Abilene TX, L.P.
3977. CVS EGL Nacogdoches San Antonio TX, L.P.
3978. CVS EGL Nall Avenue KS, Inc.
3979. CVS EGL Naples FL, L.L.C.
3980. CVS EGL Narcoosee Road FL, L.L.C.
3981. CVS EGL Nasa Houston TX, L.P.
3982. CVS EGL Natchez MS, Inc.
3983. CVS EGL Navarre FL, L.L.C.
3984. CVS EGL Nebraska Tampa FL, L.L.C.
3985. CVS EGL Nederland TX, L.P.
3986. CVS EGL New Boston Texarkana TX, L.P.
3987. CVS EGL New Braunfels TX, L.P.
3988. CVS EGL New Cedar TX, L.P.
3989. CVS EGL New Orleans LA, Inc.
3990. CVS EGL New Tampa FL, L.L.C.
3991. CVS EGL New Territory Sugar Land TX, L.P.
3992. CVS EGL Newberry Road FL, L.L.C.
3993. CVS EGL Newhaven FL, L.L.C.
3994. CVS EGL Niceville FL, L.L.C.
3995. CVS EGL Nine Mile FL, L.L.C.
3996. CVS EGL Ninth Galveston TX, L.P.
3997. CVS EGL Noble Williston FL, L.L.C.
3998. CVS EGL Nogalitos TX, L.P.
3999. CVS EGL Nomans FL, L.L.C.
4000. CVS EGL Norman OK, Inc.
4001. CVS EGL Normandy FL, L.L.C.
4002. CVS EGL Normandy Jacksonville FL, L.L.C.
4003. CVS EGL North 16th AZ, L.L.C.
4004. CVS EGL North 16th Street TX, L.P.
4005. CVS EGL North Belton MO, Inc.
4006. CVS EGL North Braunfels TX, L.P.

4007. CVS EGL North Cleveland FL, L.L.C.
4008. CVS EGL North Congress FL, L.L.C.
4009. CVS EGL North Dale Tampa FL, L.L.C.
4010. CVS EGL North Davis MS, Inc.
4011. CVS EGL North Federal FL, L.L.C.
4012. CVS EGL North Florida FL, L.L.C.
4013. CVS EGL North Freeway TX, L.P.
4014. CVS EGL North Highland FL, L.L.C.
4015. CVS EGL North Homestead FL, L.L.C.
4016. CVS EGL North Josey Lane TX, L.P.
4017. CVS EGL North Lauderdale FL, L.L.C.
4018. CVS EGL North Market LA, Inc.
4019. CVS EGL North May OK, Inc.
4020. CVS EGL North Miami Beach FL, L.L.C.
4021. CVS EGL North Military Trail FL, L.L.C.
4022. CVS EGL North Nova FL, L.L.C.
4023. CVS EGL North Ocean FL, L.L.C.
4024. CVS EGL North Pensacola FL, L.L.C.
4025. CVS EGL North Rockwell OK, Inc.
4026. CVS EGL North Santa Fe OK, Inc.
4027. CVS EGL North Vero FL, L.L.C.
4028. CVS EGL North Wickham Road FL, L.L.C.
4029. CVS EGL Northeast Ocean FL, L.L.C.
4030. CVS EGL Northern Glendale AZ, L.L.C.
4031. CVS EGL Northpark Humble TX, L.P.
4032. CVS EGL Northwest Freeway TX, L.P.
4033. CVS EGL Northwest Houston TX, L.P.
4034. CVS EGL Nova Daytona Beach FL, L.L.C.
4035. CVS EGL Nova Ormond Beach FL, L.L.C.
4036. CVS EGL NW Loop 436 Carthage TX, L.P.
4037. CVS EGL Oak Kansas City MO, Inc.
4038. CVS EGL Oak Lawn Dallas TX, L.P.
4039. CVS EGL Oak Traffic Kansas City MO, Inc.
4040. CVS EGL Oakhurst Seminole FL, L.L.C.
4041. CVS EGL Oakland Lauderdale FL, L.L.C.
4042. CVS EGL Oakland Park Boulevard FL, L.L.C.
4043. CVS EGL Oakland Park West FL, L.L.C.
4044. CVS EGL Ocala Southwest FL, L.L.C.
4045. CVS EGL Ocean Springs MS, Inc.
4046. CVS EGL Ocoee FL, L.L.C.
4047. CVS EGL Ohio Live Oak FL, L.L.C.
4048. CVS EGL Ohio Lynn Haven FL, L.L.C.
4049. CVS EGL Okeechobee Boulevard FL, L.L.C.
4050. CVS EGL Okeechobee West Palm FL, L.L.C.
4051. CVS EGL Oklahoma City 44 Southwest, Inc.
4052. CVS EGL Oklahoma Properties, Inc.
4053. CVS EGL Olathe KS, Inc.
4054. CVS EGL Old Cutler Miami FL, L.L.C.
4055. CVS EGL Old Quincy Tallahassee FL, L.L.C.
4056. CVS EGL Old Westeimer TX, L.P.
4057. CVS EGL Opa Locka FL, L.L.C.

4058. CVS EGL Orange Blossom Orlando FL, L.L.C.
4059. CVS EGL Orange Blossom Trail FL, L.L.C.
4060. CVS EGL Orange Kissimmee FL, L.L.C.
4061. CVS EGL Orange Orlando FL, L.L.C.
4062. CVS EGL Orange Park FL, L.L.C.
4063. CVS EGL Orange TX, L.P.
4064. CVS EGL Orlando Sanford FL, L.L.C.
4065. CVS EGL Orlando Winter Park FL, L.L.C.
4066. CVS EGL Oro Valley AZ, L.L.C.
4067. CVS EGL Osceola Kissimmee FL, L.L.C.
4068. CVS EGL Oslo Vero FL, L.L.C.
4069. CVS EGL Osprey FL, L.L.C.
4070. CVS EGL Osuna Road NM, L.L.C.
4071. CVS EGL Overland Park KS, Inc.
4072. CVS EGL Overseas Big Pine Key FL, L.L.C.
4073. CVS EGL Overseas Islamorada FL, L.L.C.
4074. CVS EGL Overseas Key Largo FL, L.L.C.
4075. CVS EGL Overseas Marathon FL, L.L.C.
4076. CVS EGL Overseas Tavernier FL, L.L.C.
4077. CVS EGL Oviedo FL, L.L.C.
4078. CVS EGL Oxford FL, L.L.C.
4079. CVS EGL Oyster Creek Lake Jackson TX, L.P.
4080. CVS EGL Palafox Pensacola FL, L.L.C.
4081. CVS EGL Palatka FL, L.L.C.
4082. CVS EGL Palm 19th North FL, L.L.C.
4083. CVS EGL Palm Avenue FL, L.L.C.
4084. CVS EGL Palm Bay FL, L.L.C.
4085. CVS EGL Palm Beach Boulevard FL, L.L.C.
4086. CVS EGL Palm Beach Fort Myers FL, L.L.C.
4087. CVS EGL Palm Coast FL, L.L.C.
4088. CVS EGL Palm Ridge Sanibel FL, L.L.C.
4089. CVS EGL Panama City FL, L.L.C.
4090. CVS EGL Panther Creek TX, L.P.
4091. CVS EGL Park Houma LA, Inc.
4092. CVS EGL Parker Centennial CO CVS, L.L.C.
4093. CVS EGL Parker Denver CO CVS, L.L.C.
4094. CVS EGL Parkway Spring TX, L.P.
4095. CVS EGL Parkwood TX, L.P.
4096. CVS EGL Parmer Cedar TX, L.P.
4097. CVS EGL Parmer Harris TX, L.P.
4098. CVS EGL Parrott Okeechobee FL, L.L.C.
4099. CVS EGL Pascagoula MS, Inc.
4100. CVS EGL Paseo Del Norte NM, L.L.C.
4101. CVS EGL Pat Booker Universal City TX, L.P.
4102. CVS EGL Paul Maillard Luling LA, Inc.
4103. CVS EGL Pearl Boulder CO CVS, L.L.C.
4104. CVS EGL Pearl MS, Inc.
4105. CVS EGL Perdido Pensacola FL, L.L.C.
4106. CVS EGL Perkins Baton Rouge LA, Inc.
4107. CVS EGL Pflugerville TX, L.P.
4108. CVS EGL PGA Boulevard FL, L.L.C.
4109. CVS EGL Phenix City AL, Inc.
4110. CVS EGL Phoenix McDowell AZ, L.L.C.
4111. CVS EGL Picayune MS, Inc.
4112. CVS EGL Pine Island FL, L.L.C.
4113. CVS EGL Pine Naples FL, L.L.C.

4114. CVS EGL Pine Ocala FL, L.L.C.
4115. CVS EGL Pinellas Park FL, L.L.C.
4116. CVS EGL Pines Boulevard FL, L.L.C.
4117. CVS EGL Pines Hollywood FL, L.L.C.
4118. CVS EGL Pines Shreveport LA, Inc.
4119. CVS EGL Pinhook Lafayette LA, Inc.
4120. CVS EGL Pioneer Arlington TX, L.P.
4121. CVS EGL Pipers Glen FL, L.L.C.
4122. CVS EGL Plank Baton Rouge LA, Inc.
4123. CVS EGL Plant City FL, L.L.C.
4124. CVS EGL Platte City MO, Inc.
4125. CVS EGL Plaza Tampa FL, L.L.C.
4126. CVS EGL Pleasant Valley Garland TX, L.P.
4127. CVS EGL Poinciana Destin FL, L.L.C.
4128. CVS EGL Pointe Fort Myers FL, L.L.C.
4129. CVS EGL Polk Houston TX, L.P.
4130. CVS EGL Pompano Beach FL, L.L.C.
4131. CVS EGL Ponchatoula LA, Inc.
4132. CVS EGL Pontchartrain Slidell LA, Inc.
4133. CVS EGL Port Arthur TX, L.P.
4134. CVS EGL Port Lavaca TX, L.P.
4135. CVS EGL Port Neches TX, L.P.
4136. CVS EGL Port Richey FL, L.L.C.
4137. CVS EGL Port Saint Lucie FL, L.L.C.
4138. CVS EGL Port Southwest FL, L.L.C.
4139. CVS EGL Porter TX, L.P.
4140. CVS EGL Post Oak TX, L.P.
4141. CVS EGL Potranco San Antonio TX, L.P.
4142. CVS EGL Power German AZ, L.L.C.
4143. CVS EGL Powers Stetson CO CVS, L.L.C.
4144. CVS EGL Prairie Village KS, Inc.
4145. CVS EGL Precinct Hurst TX, L.P.
4146. CVS EGL Preston Forrest TX, L.P.
4147. CVS EGL Preston Frisco TX, L.P.
4148. CVS EGL Preston Road TX, L.P.
4149. CVS EGL Prima Vista FL, L.L.C.
4150. CVS EGL Providence Deltona FL, L.L.C.
4151. CVS EGL Prytania New Orleans LA, Inc.
4152. CVS EGL Public Lafayette CO CVS, L.L.C.
4153. CVS EGL Quail Roost Miami FL, L.L.C.
4154. CVS EGL Quebec Denver CO CVS, L.L.C.
4155. CVS EGL Queenston TX, L.P.
4156. CVS EGL Quincy Avenue MO, Inc.
4157. CVS EGL Quincy FL, L.L.C.
4158. CVS EGL Quincy Tallahassee FL, L.L.C.
4159. CVS EGL Racetrack Walton FL, L.L.C.
4160. CVS EGL Rattlesnake Hammock FL, L.L.C.
4161. CVS EGL Rattlesnake Naples FL, L.L.C.
4162. CVS EGL Ray McQueen AZ, L.L.C.
4163. CVS EGL Rayford Spring TX, L.P.
4164. CVS EGL Red Bluff Pasadena TX, L.P.
4165. CVS EGL Red Bug FL, L.L.C.
4166. CVS EGL Red Bug Oviedo FL, L.L.C.
4167. CVS EGL Reno Mustang OK, Inc.
4168. CVS EGL Research TX, L.P.
4169. CVS EGL Richardson Henderson TX, L.P.

4170. CVS EGL Richey FL, L.L.C.
4171. CVS EGL Richland MS, Inc.
4172. CVS EGL Richmond Hill FL, L.L.C.
4173. CVS EGL Ridge New Port Richey FL, L.L.C.
4174. CVS EGL Ridgewood Beach FL, L.L.C.
4175. CVS EGL Ridgewood Edgewater FL, L.L.C.
4176. CVS EGL Riggs Chandler AZ, L.L.C.
4177. CVS EGL River Oaks Fort Worth TX, L.P.
4178. CVS EGL Riverview FL, L.L.C.
4179. CVS EGL Robertsdale AL, Inc.
4180. CVS EGL Robinson Norman OK, Inc.
4181. CVS EGL Robstown TX, L.P.
4182. CVS EGL Rock Prairie College Station TX, L.P.
4183. CVS EGL Rockwall TX, L.P.
4184. CVS EGL Rockwell Oklahoma City OK, Inc.
4185. CVS EGL Rogero Jacksonville FL, L.L.C.
4186. CVS EGL Roosevelt FL, L.L.C.
4187. CVS EGL Roosevelt Key West FL, L.L.C.
4188. CVS EGL Rosemont Goodyear AZ, L.L.C.
4189. CVS EGL Rosenburg TX, L.P.
4190. CVS EGL Ross Dallas TX, L.P.
4191. CVS EGL Round Rock TX, L.P.
4192. CVS EGL Rowlett TX, L.P.
4193. CVS EGL Royal Palm Beach FL, L.L.C.
4194. CVS EGL Rufe Snow Keller TX, L.P.
4195. CVS EGL Sadler Fernandina Beach FL, L.L.C.
4196. CVS EGL Saginaw TX, L.P.
4197. CVS EGL Saint Andrews Boca Raton FL, L.L.C.
4198. CVS EGL Saint Augustine FL, L.L.C.
4199. CVS EGL Saint James FL, L.L.C.
4200. CVS EGL Sam Houston LA, Inc.
4201. CVS EGL Sample Pompano Beach FL, L.L.C.
4202. CVS EGL Samuell Dallas TX, L.P.
4203. CVS EGL San Bernardino NM, L.L.C.
4204. CVS EGL San Carlos FL, L.L.C.
4205. CVS EGL San Jose FL, L.L.C.
4206. CVS EGL San Marcos TX, L.P.
4207. CVS EGL San Pedro Avenue TX, L.P.
4208. CVS EGL Sandalfoot Boca Raton FL, L.L.C.
4209. CVS EGL Sandlake Orlando FL, L.L.C.
4210. CVS EGL Sanford FL, L.L.C.
4211. CVS EGL Santa Barbara Cape Coral FL, L.L.C.
4212. CVS EGL Santa Edmond OK, Inc.
4213. CVS EGL Santa Fe OK, Inc.
4214. CVS EGL Sarafruit FL, L.L.C.
4215. CVS EGL Sarasota FL, L.L.C.
4216. CVS EGL Satellite Beach FL, L.L.C.
4217. CVS EGL Sawgrass Ponte Vedra FL, L.L.C.
4218. CVS EGL Scarsdale Houston TX, L.P.
4219. CVS EGL Schillinger Mobile AL, Inc.
4220. CVS EGL Scott Street TX, L.P.
4221. CVS EGL Scottsdale AZ, L.L.C.
4222. CVS EGL Scottsdale Paradise AZ, L.L.C.
4223. CVS EGL Seagoville TX, L.P.
4224. CVS EGL Sebastian FL, L.L.C.
4225. CVS EGL Sebring FL, L.L.C.

4226. CVS EGL Security CO CVS, L.L.C.
4227. CVS EGL Seffner FL, L.L.C.
4228. CVS EGL Seminole Largo FL, L.L.C.
4229. CVS EGL Semmes AL, Inc.
4230. CVS EGL Semoran Winter Park FL, L.L.C.
4231. CVS EGL Seven Springs FL, L.L.C.
4232. CVS EGL Severn Metairie LA, Inc.
4233. CVS EGL Shartel Oklahoma, Inc.
4234. CVS EGL Shaver Pasadena TX, L.P.
4235. CVS EGL Shawnee KS, Inc.
4236. CVS EGL Shea Phoenix AZ, L.L.C.
4237. CVS EGL Sheldon Channelview TX, L.P.
4238. CVS EGL Sheridan Hollywood FL, L.L.C.
4239. CVS EGL Sheridan Pembroke FL, L.L.C.
4240. CVS EGL Sherwood Forest LA, Inc.
4241. CVS EGL Shreveport LA, Inc.
4242. CVS EGL Silsbee TX, L.P.
4243. CVS EGL Silver Springs FL, L.L.C.
4244. CVS EGL Silver Star Orlando FL, L.L.C.
4245. CVS EGL Simon Franklin LA, Inc.
4246. CVS EGL Skillman TX, L.P.
4247. CVS EGL Skyline Tucson AZ, L.L.C.
4248. CVS EGL Snider Plaza TX, L.P.
4249. CVS EGL Snow Mid Cities TX, L.P.
4250. CVS EGL Socrum Loop FL, L.L.C.
4251. CVS EGL South 270 League City TX, L.P.
4252. CVS EGL South 78 Wylie TX, L.P.
4253. CVS EGL South Alameda TX, L.P.
4254. CVS EGL South Boynton FL, L.L.C.
4255. CVS EGL South Bryant OK, Inc.
4256. CVS EGL South Cleveland FL, L.L.C.
4257. CVS EGL South Congress FL, L.L.C.
4258. CVS EGL South Conway FL, L.L.C.
4259. CVS EGL South Deerfield FL, L.L.C.
4260. CVS EGL South Dixie FL, L.L.C.
4261. CVS EGL South East 44th OK, Inc.
4262. CVS EGL South Fort Worth TX, L.P.
4263. CVS EGL South Hampton TX, L.P.
4264. CVS EGL South Hiawassee FL, L.L.C.
4265. CVS EGL South Jefferson TX, L.P.
4266. CVS EGL South Main Houston TX, L.P.
4267. CVS EGL South Mason Katy TX, L.P.
4268. CVS EGL South Miami FL, L.L.C.
4269. CVS EGL South Military FL, L.L.C.
4270. CVS EGL South Monroe FL, L.L.C.
4271. CVS EGL South Orange Orlando FL, L.L.C.
4272. CVS EGL South Ridgewood FL, L.L.C.
4273. CVS EGL South Staples TX, L.P.
4274. CVS EGL South Storey TX, L.P.
4275. CVS EGL South Volusia FL, L.L.C.
4276. CVS EGL South Washington TX, L.P.
4277. CVS EGL South Woodland FL, L.L.C.
4278. CVS EGL Southeast Maricamp FL, L.L.C.

4279. CVS EGL Southern Boulevard FL, L.L.C.
4280. CVS EGL Southern Mesa AZ, L.L.C.
4281. CVS EGL Southern, L.L.C.
4282. CVS EGL Southside Jacksonville FL, L.L.C.
4283. CVS EGL Southwest 88th FL, L.L.C.
4284. CVS EGL Southwest FL, L.L.C.
4285. CVS EGL Southwest Sugar Land TX, L.P.
4286. CVS EGL Southwest Wichita Falls TX, L.P.
4287. CVS EGL Speedway Tucson AZ, L.L.C.
4288. CVS EGL Spencer Highway TX, L.P.
4289. CVS EGL Spencer Pasadena TX, L.P.
4290. CVS EGL Spirit Lake FL, L.L.C.
4291. CVS EGL Spring Champion TX, L.P.
4292. CVS EGL Spring FL, L.L.C.
4293. CVS EGL Spring Hill AL, Inc.
4294. CVS EGL Spring Hill Drive FL, L.L.C.
4295. CVS EGL Spring Hill FL, L.L.C.
4296. CVS EGL SR 13 Jacksonville FL, L.L.C.
4297. CVS EGL St. Cloud FL, L.L.C.
4298. CVS EGL St. Pete Sarasota FL, L.L.C.
4299. CVS EGL Stapley Mesa AZ, L.L.C.
4300. CVS EGL Staring Baton Rouge LA, Inc.
4301. CVS EGL Starkey Seminole FL, L.L.C.
4302. CVS EGL State Altamonte FL, L.L.C.
4303. CVS EGL State Augustine FL, L.L.C.
4304. CVS EGL State Callahan FL, L.L.C.
4305. CVS EGL State Clearwater FL, L.L.C.
4306. CVS EGL State Hollywood FL, L.L.C.
4307. CVS EGL State Jackson MS, Inc.
4308. CVS EGL State Lauderdale FL, L.L.C.
4309. CVS EGL State Line Kansas City MO, Inc.
4310. CVS EGL State Line Road MO, Inc.
4311. CVS EGL State Longwood FL, L.L.C.
4312. CVS EGL State Road 7 FL, L.L.C.
4313. CVS EGL State Valrico FL, L.L.C.
4314. CVS EGL Sterlington Monroe LA, Inc.
4315. CVS EGL Stewart Azle TX, L.P.
4316. CVS EGL Stirling Lauderdale FL, L.L.C.
4317. CVS EGL Stock Island FL, L.L.C.
4318. CVS EGL Stone Kilgore TX, L.P.
4319. CVS EGL Strand Naples FL, L.L.C.
4320. CVS EGL Stribling Brandon MS, Inc.
4321. CVS EGL Stuart FL, L.L.C.
4322. CVS EGL Sulphur Springs TX, L.P.
4323. CVS EGL Summerlin FL, L.L.C.
4324. CVS EGL Sun City FL, L.L.C.
4325. CVS EGL Suncoast FL, L.L.C.
4326. CVS EGL Suncrest Jackson MS, Inc.
4327. CVS EGL Sunrise Commercial FL, L.L.C.
4328. CVS EGL Sunrise Lauderdale FL, L.L.C.
4329. CVS EGL Sunset Drive FL, L.L.C.
4330. CVS EGL Sunset Miami FL, L.L.C.
4331. CVS EGL SW Green Arlington TX, L.P.

4332. CVS EGL SW Wilshire Burleson TX, L.P.
4333. CVS EGL Sycamore School TX, L.P.
4334. CVS EGL Taft Street FL, L.L.C.
4335. CVS EGL Tamiami Bonita Springs FL, L.L.C.
4336. CVS EGL Tamiami Fort Myers FL, L.L.C.
4337. CVS EGL Tamiami Naples FL, L.L.C.
4338. CVS EGL Tamiami Nokomis FL, L.L.C.
4339. CVS EGL Tamiami North Port FL, L.L.C.
4340. CVS EGL Tamiami Port Charlotte FL, L.L.C.
4341. CVS EGL Tamiami Punta Gorda FL, L.L.C.
4342. CVS EGL Tamiami Sarasota FL, L.L.C.
4343. CVS EGL Tamiami Venice FL, L.L.C.
4344. CVS EGL Tampa Jenkins FL, L.L.C.
4345. CVS EGL Tampa Oldsmar FL, L.L.C.
4346. CVS EGL Tampa St. Pete FL, L.L.C.
4347. CVS EGL Tarpon Springs FL, L.L.C.
4348. CVS EGL Tarrant Beach TX, L.P.
4349. CVS EGL Tate Cove Ville Platte LA, Inc.
4350. CVS EGL Tatum Phoenix AZ, L.L.C.
4351. CVS EGL Teel Frisco TX, L.P.
4352. CVS EGL Telephone HoustonTX, L.P.
4353. CVS EGL Temple Starke FL, L.L.C.
4354. CVS EGL Tenaha Center TX, L.P.
4355. CVS EGL Tennessee FL, L.L.C.
4356. CVS EGL Tequesta FL, L.L.C.
4357. CVS EGL Texas Alice TX, L.P.
4358. CVS EGL Texas College Station TX, L.P.
4359. CVS EGL Texas Properties, Inc.
4360. CVS EGL Texoma Sherman TX, L.P.
4361. CVS EGL Thomasville FL, L.L.C.
4362. CVS EGL Thomasville Road FL, L.L.C.
4363. CVS EGL Thomasville Tallahassee FL, L.L.C.
4364. CVS EGL Thompson Nursery FL, L.L.C.
4365. CVS EGL Thompson Peak AZ, L.L.C.
4366. CVS EGL Thornton CO CVS, L.L.C.
4367. CVS EGL Thornton Temple TX, L.P.
4368. CVS EGL Thunderbird Peoria AZ, L.L.C.
4369. CVS EGL Thunderbird Sun City AZ, L.L.C.
4370. CVS EGL Tidwell Houston TX, L.P.
4371. CVS EGL Timberline Collins CO CVS, L.L.C.
4372. CVS EGL Tomball TX, L.P.
4373. CVS EGL Tower Denver CO CVS, L.L.C.
4374. CVS EGL Town FL, L.L.C.
4375. CVS EGL Trade Canton TX, L.P.
4376. CVS EGL Trail Fort Myers FL, L.L.C.
4377. CVS EGL Trail Lake TX, L.P.
4378. CVS EGL Trail Naples FL, L.L.C.
4379. CVS EGL Truman Key West FL, L.L.C.
4380. CVS EGL Tulip FL, L.L.C.
4381. CVS EGL Tuttle Sarasota FL, L.L.C.

4382. CVS EGL Twin Hills Dallas TX, L.P.
4383. CVS EGL Tyler TX, L.P.
4384. CVS EGL Tyndall Panama City FL, L.L.C.
4385. CVS EGL Ulmerton Largo FL, L.L.C.
4386. CVS EGL Ulmerton Road FL, L.L.C.
4387. CVS EGL Underhill Orlando FL, L.L.C.
4388. CVS EGL Union Hills AZ, L.L.C.
4389. CVS EGL University Blvd Orlando FL, L.L.C.
4390. CVS EGL University Bradenton FL, L.L.C.
4391. CVS EGL University Denton TX, L.P.
4392. CVS EGL University Fort Lauderdale FL, L.L.C.
4393. CVS EGL University Hollywood FL, L.L.C.
4394. CVS EGL University Pompano FL, L.L.C.
4395. CVS EGL University Winter Park FL, L.L.C.
4396. CVS EGL US Hwy 19 Holiday FL, L.L.C.
4397. CVS EGL Uvalde Houston TX, L.P.
4398. CVS EGL Val Vista AZ, L.L.C.
4399. CVS EGL Valley Mills TX, L.P.
4400. CVS EGL Vandament Yukon OK, Inc.
4401. CVS EGL Vanderbilt Beach FL, L.L.C.
4402. CVS EGL Vegas Verdes NM, L.L.C.
4403. CVS EGL Venice Bypass FL, L.L.C.
4404. CVS EGL Venice FL, L.L.C.
4405. CVS EGL Veterans Metairie LA, Inc.
4406. CVS EGL Viera Melbourne FL, L.L.C.
4407. CVS EGL Village West Palm FL, L.L.C.
4408. CVS EGL Vine Kissimmee FL, L.L.C.
4409. CVS EGL Vineland Kissimmee FL, L.L.C.
4410. CVS EGL Vivion Kansas City MO, Inc.
4411. CVS EGL Voss Houston TX, L.P.
4412. CVS EGL W 20 Arlington TX, L.P.
4413. CVS EGL W 4th Cameron TX, L.P.
4414. CVS EGL W 7th Corsicana TX, L.P.
4415. CVS EGL W Adams Temple TX, L.P.
4416. CVS EGL W Beauregard TX, L.P.
4417. CVS EGL W Bell Fort TX, L.P.
4418. CVS EGL W Berry Fort Worth TX, L.P.
4419. CVS EGL W Camp Wisdom TX, L.P.
4420. CVS EGL W Davis Conroe TX, L.P.
4421. CVS EGL W Frank Lufkin TX, L.P.
4422. CVS EGL W Gentry Tyler TX, L.P.
4423. CVS EGL W Illinois Dallas TX, L.P.
4424. CVS EGL W Lamar Arlington TX, L.P.
4425. CVS EGL W Little York Houston TX, L.P.
4426. CVS EGL W Loop Longview TX, L.P.
4427. CVS EGL W Main League City TX, L.P.
4428. CVS EGL W Marshall Longview TX, L.P.
4429. CVS EGL W Moore Terrell TX, L.P.

4430. CVS EGL W Northwest Grapevine TX, L.P.
4431. CVS EGL W Park Row TX, L.P.
4432. CVS EGL W Parker TX, L.P.
4433. CVS EGL W Pioneer TX, L.P.
4434. CVS EGL W San Antonio TX, L.P.
4435. CVS EGL W Walker TX, L.P.
4436. CVS EGL W Walnut Garland TX, L.P.
4437. CVS EGL W Washington TX, L.P.
4438. CVS EGL Wabasso FL, L.L.C.
4439. CVS EGL Wadsworth CO CVS, L.L.C.
4440. CVS EGL Walker Houston TX, L.P.
4441. CVS EGL Walker LA, Inc.
4442. CVS EGL Waller TX, L.P.
4443. CVS EGL Walsingham Largo FL, L.L.C.
4444. CVS EGL Walzem San Antonio TX, L.P.
4445. CVS EGL Warner Gilbert AZ, L.L.C.
4446. CVS EGL Washington Franklinton LA, Inc.
4447. CVS EGL Washington Houston TX, L.P.
4448. CVS EGL Washington Miami FL, L.L.C.
4449. CVS EGL Washington TX, L.P.
4450. CVS EGL Weatherford TX, L.P.
4451. CVS EGL Webster TX, L.P.
4452. CVS EGL Wellington Forest FL, L.L.C.
4453. CVS EGL Wemore Tucson AZ, L.L.C.
4454. CVS EGL Wesley Chapel FL, L.L.C.
4455. CVS EGL Wesley Greenville TX, L.P.
4456. CVS EGL West Anderson TX, L.P.
4457. CVS EGL West Arkansas TX, L.P.
4458. CVS EGL West Avenue TX, L.P.
4459. CVS EGL West Bellfort TX, L.P.
4460. CVS EGL West Britton OK, Inc.
4461. CVS EGL West Broward FL, L.L.C.
4462. CVS EGL West Campbell TX, L.P.
4463. CVS EGL West Colonial FL, L.L.C.
4464. CVS EGL West Columbia TX, L.P.
4465. CVS EGL West Davie Boulevard FL, L.L.C.
4466. CVS EGL West Ennis TX, L.P.
4467. CVS EGL West Esplanade LA, Inc.
4468. CVS EGL West FM 1960 TX, L.P.
4469. CVS EGL West Houston TX, L.P.
4470. CVS EGL West Jefferson TX, L.P.
4471. CVS EGL West Lantana FL, L.L.C.
4472. CVS EGL West Park Avenue LA, Inc.
4473. CVS EGL West Pensacola FL, L.L.C.
4474. CVS EGL West River Tucson AZ, L.L.C.
4475. CVS EGL West Rochelle TX, L.P.
4476. CVS EGL West Sample FL, L.L.C.
4477. CVS EGL West Slaughter TX, L.P.
4478. CVS EGL West Sunrise FL, L.L.C.
4479. CVS EGL West Tampa FL, L.L.C.
4480. CVS EGL West Union Hills AZ, L.L.C.
4481. CVS EGL West University FL, L.L.C.
4482. CVS EGL West Waters FL, L.L.C.
4483. CVS EGL Western Center TX, L.P.
4484. CVS EGL Western Oklahoma City OK, Inc.
4485. CVS EGL Westhampton Springs FL, L.L.C.
4486. CVS EGL Westheimer Houston TX, L.P.
4487. CVS EGL Westheimer Road TX, L.P.
4488. CVS EGL Westheimer Suite K TX, L.P.

4489. CVS EGL Westheimer TX, L.P.
4490. CVS EGL Weston Road FL, L.L.C.
4491. CVS EGL Westwego LA, Inc.
4492. CVS EGL Wheatridge CO CVS, L.L.C.
4493. CVS EGL Wheeler Jasper TX, L.P.
4494. CVS EGL White Settlement TX, L.P.
4495. CVS EGL Wichita Falls TX, L.P.
4496. CVS EGL Wickham Melbourne FL, L.L.C.
4497. CVS EGL Wildcat Portland TX, L.P.
4498. CVS EGL Wiles Coral Springs FL, L.L.C.
4499. CVS EGL Wiles Road FL, L.L.C.
4500. CVS EGL William Cannon TX, L.P.
4501. CVS EGL Wills Point TX, L.P.
4502. CVS EGL Windermere Orlando FL, L.L.C.
4503. CVS EGL Winter Garden Vineland FL, L.L.C.
4504. CVS EGL Winter Springs FL, L.L.C.
4505. CVS EGL Woodforest TX, L.P.
4506. CVS EGL Woodland De Land FL, L.L.C.
4507. CVS EGL Woodmen CO CVS, L.L.C.
4508. CVS EGL Woodway TX, L.P.
4509. CVS EGL Wurzbach TX, L.P.
4510. CVS EGL Wynnewood TX, L.P.
4511. CVS EGL Yale Houston TX, L.P.
4512. CVS EGL Yamato Boca Raton FL, L.L.C.
4513. CVS EGL Yamato Road FL, L.L.C.
4514. CVS EGL Young Chiefland FL, L.L.C.
4515. CVS EGL Youree Shreveport LA, Inc.
4516. CVS EGL Zavala TX, L.P.
4517. CVS EGL Zephyrhills FL, L.L.C.
4518. CVS EGL, L.L.C.
4519. CVS Ellicott City MD, L.L.C.
4520. CVS Ellwood City 5710, L.L.C.
4521. CVS Elmont, L.L.C.
4522. CVS Elmsford, L.L.C.
4523. CVS Elmwood Park, L.L.C.
4524. CVS Empire Clinton Store, L.L.C.
4525. CVS Endicott, L.L.C.
4526. CVS ETB Holding Company, L.L.C.
4527. CVS Fairlawn, L.L.C.
4528. CVS Fairport, L.L.C.
4529. CVS Falls Road MD, L.L.C.
4530. CVS Falmouth KY, L.L.C.
4531. CVS Farmington Hills, Inc.
4532. CVS Farmingville Store, L.L.C.
4533. CVS Flint Twp., Inc.
4534. CVS Floral Park, L.L.C.
4535. CVS Flower City, L.L.C.
4536. CVS Foreign, Inc.
4537. CVS Fort Lee, L.L.C.
4538. CVS Foundation
4539. CVS Franklin MN, L.L.C.
4540. CVS Franklin NJ, Inc.
4541. CVS Franklin Square, L.L.C.
4542. CVS Franklin Township, L.L.C.
4543. CVS Fraser, Inc.
4544. CVS Freehold, L.L.C.
4545. CVS Fresh Meadows, L.L.C.
4546. CVS Fuller Leonard, Inc.
4547. CVS Galleria Poughkeepsie, L.L.C.
4548. CVS Garson Culver, L.L.C.
4549. CVS Gate City, L.L.C.
4550. CVS Gerritsen Beach, L.L.C.
4551. CVS Gilbert 3272, L.L.C.
4552. CVS Gilford, L.L.C.
4553. CVS Glen Cove, L.L.C.
4554. CVS Glen Rock, L.L.C.
4555. CVS Glendora, L.P.
4556. CVS Glenmont Plaza, L.L.C.
4557. CVS Gloucester Broadway, L.L.C.
4558. CVS Grand Bay 4782, L.L.C.
4559. CVS Great Neck, L.L.C.

4560. CVS Greece, L.L.C.
4561. CVS Green Acres, L.L.C.
4562. CVS Green Mount, L.L.C.
4563. CVS Greensboro, L.L.C.
4564. CVS Guilderland, L.L.C.
4565. CVS Gulf, Inc.
4566. CVS Haddonfield, L.L.C.
4567. CVS Hamburg Center Store, L.L.C.
4568. CVS Hamilton Township, L.L.C.
4569. CVS Hampton Bays, L.L.C.
4570. CVS Harris Boulevard Charlotte, Inc.
4571. CVS Hartland 8295, L.L.C.
4572. CVS Haverstraw, L.L.C.
4573. CVS Health Applications, LLC
4574. CVS Health Centers, L.L.C.
4575. CVS Health Charity Classic, Inc.
4576. CVS Health Clinical Trial Services LLC
4577. CVS Health Employee Relief Fund
4578. CVS Health Growth Equity, LLC
4579. CVS Health Solutions LLC
4580. CVS Health Ventures Fund GP, LLC
4581. CVS Health Ventures Fund, LP
4582. CVS Health Ventures Management, LLC
4583. CVS Healthcare Practices of California
4584. CVS Healthcare Practices of New Jersey LLC
4585. CVS Healthcare Practices PLLC
4586. CVS Heather Croft, L.L.C.
4587. CVS Henrietta Store, L.L.C.
4588. CVS Henrietta, L.L.C.
4589. CVS Hertel Ave, L.L.C.
4590. CVS Hilliard OH, Inc.
4591. CVS Hillside Ave., L.L.C.
4592. CVS Hoboken, L.L.C.
4593. CVS Holbrook, L.L.C.
4594. CVS Howell 8046, L.L.C.
4595. CVS Hudson Clinton Store, L.L.C.
4596. CVS Huntersville, Inc.
4597. CVS Huntington Beach, L.P.
4598. CVS Huntington, L.L.C.
4599. CVS IN Distribution, Inc.
4600. CVS Indiana, L.L.C.
4601. CVS Indianapolis Distribution, L.L.C.
4602. CVS International, Inc.
4603. CVS International, L.L.C.
4604. CVS Inwood Burnside, L.L.C.
4605. CVS Irondequoit, L.L.C.
4606. CVS Islip Terrace, L.L.C.
4607. CVS Ithaca Clinton Store, L.L.C.
4608. CVS Ithaca, L.L.C.
4609. CVS Jackson NJ, L.L.C.
4610. CVS Jefferson Yorktown, L.L.C.
4611. CVS Jericho, L.L.C.
4612. CVS Jerusalem Avenue, L.L.C.
4613. CVS Jerusalem North Bellmore, L.L.C.
4614. CVS Joe Miller, L.L.C.
4615. CVS Johnson City, L.L.C.
4616. CVS Kalamazoo, Inc.
4617. CVS Keene, L.L.C.
4618. CVS Kenmore Fairfield, L.L.C.
4619. CVS Kenmore Village, L.L.C.
4620. CVS Kensington Amherst, L.L.C.
4621. CVS Kensington, L.L.C.
4622. CVS Kidney Care Advanced Technologies LLC
4623. CVS Kidney Care Health Services LLC
4624. CVS Kidney Care Home Dialysis LLC
4625. CVS Kidney Care, LLC
4626. CVS La Puente, L.P.
4627. CVS Laconia, L.L.C.
4628. CVS Lagrange 4540, L.L.C.
4629. CVS Lake Norwood, Inc.
4630. CVS Lakewood, L.P.
4631. CVS Lansdowne 3142, L.L.C.
4632. CVS Larchmont, L.L.C.
4633. CVS Laurel River, L.L.C.
4634. CVS Lawrenceville Texas, L.L.C.

4635. CVS Leonia N.J., Inc.
4636. CVS Levittown Store, L.L.C.
4637. CVS Lewiston Center Street, L.L.C.
4638. CVS Lewiston, L.L.C.
4639. CVS Lexington Ave., L.L.C.
4640. CVS LF Hamlin, L.L.C.
4641. CVS Lindenhurst, L.L.C.
4642. CVS Lockport Clinton Store, L.L.C.
4643. CVS Logan 3454, L.L.C.
4644. CVS Lombard 2791, L.L.C.
4645. CVS Long Beach Carson, L.P.
4646. CVS Long Island Store, L.L.C.
4647. CVS Long Pond Road, L.L.C.
4648. CVS Lyell Clinton Paine, L.L.C.
4649. CVS M Street Washington DC, L.L.C.
4650. CVS Mack Drug of New York, L.L.C.
4651. CVS MaComb & Mile, Inc.
4652. CVS Mahopac Store, L.L.C.
4653. CVS Mallard Creek Charlotte, Inc.
4654. CVS Mamaroneck Ferndale, L.L.C.
4655. CVS Mamaroneck Finast, L.L.C.
4656. CVS Mamaroneck Harbor Store, L.L.C.
4657. CVS Mamaroneck Post Road, L.L.C.
4658. CVS Mammoth Road, L.L.C.
4659. CVS Managed Care, Inc.
4660. CVS Management Support, LLC
4661. CVS Manalapan NJ, Inc.
4662. CVS Manasquan, L.L.C.
4663. CVS Manchester Elm, L.L.C.
4664. CVS Manchester NH, L.L.C.
4665. CVS Manor Road, L.L.C.
4666. CVS Mansfield, L.P.
4667. CVS Margate Ventnor, L.L.C.
4668. CVS Marietta Piedmont, Inc.
4669. CVS Mayfly Corp.
4670. CVS Mays Landing, L.L.C.
4671. CVS ME Holding Company, L.L.C.
4672. CVS Mechanicville, L.L.C.
4673. CVS Medford NJ, L.L.C.
4674. CVS Medford, L.L.C.
4675. CVS Media Exchange LLC
4676. CVS Medical Practices (KS) LLC
4677. CVS Merchants Clinton Paine, L.L.C.
4678. CVS Merchantville Maple, L.L.C.
4679. CVS Meriden East Main, Inc.
4680. CVS Meridian, Inc.
4681. CVS Merrick Road, L.L.C.
4682. CVS Merrick, L.L.C.
4683. CVS Merrimack Main Street, L.L.C.
4684. CVS Metro Village, L.L.C.
4685. CVS MI Distribution, Inc.
4686. CVS Michigan, L.L.C.
4687. CVS Middle Country, L.L.C.
4688. CVS Midland Park, L.L.C.
4689. CVS Midlothian, L.L.C.
4690. CVS Mill Creek, L.L.C.
4691. CVS Mineola, L.L.C.
4692. CVS MN Holding Company, L.L.C.
4693. CVS Mobile Airport, Inc.
4694. CVS Montclair NJ, Inc.
4695. CVS Montgomery 6094, L.L.C.
4696. CVS Morse, Inc.
4697. CVS Morton Village, L.L.C.
4698. CVS Mount Laurel, L.L.C.
4699. CVS Mt. Hope Clinton Paine, L.L.C.
4700. CVS Mt. Kisco, L.L.C.
4701. CVS Mt. Read Street, L.L.C.
4702. CVS Murrells, Inc.
4703. CVS Mystic CT, Inc.
4704. CVS Nassau Street, L.L.C.
4705. CVS Nations Ford Charlotte, Inc.
4706. CVS NC Distribution, Inc.
4707. CVS Neptune Avenue, L.L.C.
4708. CVS Nesconset, L.L.C.
4709. CVS New Baltimore, Inc.
4710. CVS New Hyde Park, L.L.C.
4711. CVS New Milford, L.L.C.
4712. CVS New Rochelle, L.L.C.
4713. CVS New Scotland, L.L.C.

4714. CVS New York, Inc.
4715. CVS Newburgh Mall, L.L.C.
4716. CVS Newport City, L.L.C.
4717. CVS North Arlington, L.L.C.
4718. CVS North Babylon, L.L.C.
4719. CVS North Bellmore, L.L.C.
4720. CVS North Conway, L.L.C.
4721. CVS North Park Store, L.L.C.
4722. CVS North Portland, L.L.C.
4723. CVS North Wildwood, L.L.C.
4724. CVS Northport, L.L.C.
4725. CVS Northtown Plaza, L.L.C.
4726. CVS Norwell Washington, Inc.
4727. CVS Norwood Bergen, L.L.C.
4728. CVS Novi Distribution, L.L.C.
4729. CVS Nutley, L.L.C.
4730. CVS NV Holding Company, L.L.C.
4731. CVS O.P., L.L.C.
4732. CVS Oakdale, L.L.C.
4733. CVS Ocean Haven, L.L.C.
4734. CVS Ocean Simpson, L.L.C.
4735. CVS Oceanside, L.L.C.
4736. CVS Odenton, L.L.C.
4737. CVS of Concord NH, L.L.C.
4738. CVS of Concord, Mass., Inc.
4739. CVS of DC and VA, Inc.
4740. CVS of Emmaus, Inc.
4741. CVS of Lands Downe, Inc.
4742. CVS of Madison, Conn., Inc.
4743. CVS of Maryland, Inc.
4744. CVS of N. Carolina, Inc.
4745. CVS of North Kingstown, Inc.
4746. CVS of Pennsylvania, Inc.
4747. CVS of Rutland, Vermont, Inc.
4748. CVS of Sandwich, Inc.
4749. CVS of Stroudsburg, Inc.
4750. CVS of Swarthmore, Inc.
4751. CVS of Virginia, Inc.
4752. CVS of Waterville, Maine, L.L.C.
4753. CVS of West Virginia, Inc.
4754. CVS OH Holding Company, L.L.C.
4755. CVS Old Bridge, L.L.C.
4756. CVS Olean Clinton Store, L.L.C.
4757. CVS Oneonta Clinton Store, L.L.C.
4758. CVS Onondaga County, L.L.C.
4759. CVS Orange Avenue, Inc.
4760. CVS Orangeburg Drug Store, L.L.C.
4761. CVS Orlando FL Distribution, L.L.C.
4762. CVS Ossining, L.L.C.
4763. CVS Owl Drug, L.L.C.
4764. CVS Oyster Bay, L.L.C.
4765. CVS Ozone Park, L.L.C.
4766. CVS PA Distribution, Inc.
4767. CVS PA Distribution, L.L.C.
4768. CVS Pace FL, L.L.C.
4769. CVS Paige Colony, L.P.
4770. CVS Palisades Center, L.L.C.
4771. CVS Park Ave Rochester, L.L.C.
4772. CVS Passaic Inc.
4773. CVS Payne Avenue, L.L.C.
4774. CVS Peachtree City, Inc.
4775. CVS Peachtree Suwanee, Inc.
4776. CVS Pearl River, L.L.C.
4777. CVS Pearland Parkway, L.P.
4778. CVS Pembroke Pines 2849, L.L.C.
4779. CVS Penfield Clinton Paine, L.L.C.
4780. CVS Pharmacy Limited of Illinois, Inc.
4781. CVS Pharmacy Overseas Online, LLC
4782. CVS Pine Tree, L.L.C.
4783. CVS Plaistow, L.L.C.
4784. CVS Point Pleasant Beach, L.L.C.
4785. CVS Polifly Road, L.L.C.
4786. CVS Port Jefferson, L.L.C.
4787. CVS Portion Road, L.L.C.
4788. CVS Portland Forest, L.L.C.
4789. CVS Portland-Congress St., L.L.C.
4790. CVS Portsmouth Islington, L.L.C.
4791. CVS Post Avenue, L.L.C.
4792. CVS PR Center, Inc.
4793. CVS PR Holding Company, L.L.C.
4794. CVS Preakness Center, L.L.C.
4795. CVS Prescription Center, Inc.

4796. CVS Presidents Square, L.L.C.
4797. CVS Princeton, L.L.C.
4798. CVS Prospect Avenue, L.L.C.
4799. CVS Pyramid Utica, L.L.C.
4800. CVS Queens Boulevard, L.L.C.
4801. CVS Queensbury, L.L.C.
4802. CVS Ralph Avenue, L.L.C.
4803. CVS Ramapo Valley Road, L.L.C.
4804. CVS Ramapo, L.L.C.
4805. CVS Ramsey, L.L.C.
4806. CVS Raritan NJ, Inc.
4807. CVS RCI, LLC
4808. CVS Reading PA 3242, L.L.C.
4809. CVS Rego Park, L.L.C.
4810. CVS Reseda, L.P.
4811. CVS Revco D.S., Inc.
4812. CVS Rhode Island, Inc.
4813. CVS Richmond Atlee, Inc.
4814. CVS Richmond Hill, L.L.C.
4815. CVS Richmond Main, Inc.
4816. CVS Ridgecrest Plaza, L.L.C.
4817. CVS Ridgefield Park, L.L.C.
4818. CVS Ridgewood, L.L.C.
4819. CVS Riverside Drive, L.L.C.
4820. CVS Robinson Street, L.L.C.
4821. CVS Rochester NH, L.L.C.
4822. CVS Rochester Road, L.L.C.
4823. CVS Rockaway, L.L.C.
4824. CVS Rockville Center, L.L.C.
4825. CVS Rocky Point Village, L.L.C.
4826. CVS Romeo Plank, Inc.
4827. CVS Ronkonkoma, L.L.C.
4828. CVS Roosevelt Field, L.L.C.
4829. CVS Roselle, L.L.C.
4830. CVS Rotterdam Square, L.L.C.
4831. CVS Route 24, L.L.C.
4832. CVS Route 302, L.L.C.
4833. CVS Royal Ridge, L.L.C.
4834. CVS RS 107 Avon AZ, L.L.C.
4835. CVS RS 16th Ave AZ, L.L.C.
4836. CVS RS 19th Ave. AZ, L.L.C.
4837. CVS RS 35 Thunder AZ, L.L.C.
4838. CVS RS 4th Ave. Yuma AZ, L.L.C.
4839. CVS RS 7th Ave AZ, L.L.C.
4840. CVS RS 7th St. Phoenix AZ, L.L.C.
4841. CVS RS Alma School Rd AZ, L.L.C.
4842. CVS RS Anthem Way AZ, L.L.C.
4843. CVS RS Apache Junction AZ, L.L.C.
4844. CVS RS Arizona, L.L.C.
4845. CVS RS Baseline Rd AZ, L.L.C.
4846. CVS RS Bell Rd AZ, L.L.C.
4847. CVS RS Bell Rd. Glendale AZ, L.L.C.
4848. CVS RS Broadway Blvd. AZ, L.L.C.
4849. CVS RS Broadway Rd Tempe AZ, L.L.C.
4850. CVS RS Brown Rd AZ, L.L.C.
4851. CVS RS Bullhead City AZ, L.L.C.
4852. CVS RS Casa Grande AZ, L.L.C.
4853. CVS RS Chandler McQueen AZ, L.L.C.
4854. CVS RS Chandler Ray AZ, L.L.C.
4855. CVS RS Cotton Casa AZ, L.L.C.
4856. CVS RS Cottonwood AZ, L.L.C.
4857. CVS RS E Southern Ave AZ, L.L.C.
4858. CVS RS E. Baseline Mesa AZ, L.L.C.
4859. CVS RS E. Bell Rd Phoenix AZ, L.L.C.
4860. CVS RS E. Santa Fe Hwy 66 AZ, L.L.C.
4861. CVS RS E. University Dr Mesa AZ, L.L.C.
4862. CVS RS Elliot Rd AZ, L.L.C.
4863. CVS RS Elliott Gilbert AZ, L.L.C.
4864. CVS RS Finney Flat AZ, L.L.C.
4865. CVS RS Frank Lloyd Wright Blvd AZ, L.L.C.
4866. CVS RS Gilbert E. Eliot Rd. AZ, L.L.C.
4867. CVS RS Gilbert Mesa AZ, L.L.C.
4868. CVS RS Glen 19 AZ, L.L.C.

4869. CVS RS Golf Links Tucson AZ, L.L.C.
4870. CVS RS Grant Tucson AZ, L.L.C.
4871. CVS RS Green Valley AZ, L.L.C.
4872. CVS RS Guadalupe Gilbert AZ, L.L.C.
4873. CVS RS Higley Mesa AZ, L.L.C.
4874. CVS RS Ina Rd. AZ, L.L.C.
4875. CVS RS Indian School Phoenix AZ, L.L.C.
4876. CVS RS La Canada Tucson AZ, L.L.C.
4877. CVS RS Lindsay Rd AZ, L.L.C.
4878. CVS RS Lone Cava AZ, L.L.C.
4879. CVS RS Mesa N. Brown Rd AZ, L.L.C.
4880. CVS RS Mesa University AZ, L.L.C.
4881. CVS RS Miller Scottsdale AZ, L.L.C.
4882. CVS RS N Alvernon Way AZ, L.L.C.
4883. CVS RS N. 12th St. Phoenix AZ, L.L.C.
4884. CVS RS N. Tatum Blvd. AZ, L.L.C.
4885. CVS RS Oracle Rd AZ, L.L.C.
4886. CVS RS Palisades Blvd. AZ, L.L.C.
4887. CVS RS Peoria Union AZ, L.L.C.
4888. CVS RS Phoenix Bell AZ, L.L.C.
4889. CVS RS Phoenix Central AZ, L.L.C.
4890. CVS RS Phoenix Indian AZ, L.L.C.
4891. CVS RS Phoenix Peoria AZ, L.L.C.
4892. CVS RS Phoenix Union Hills Dr. AZ, L.L.C.
4893. CVS RS Pima Rd. AZ, L.L.C.
4894. CVS RS Prescott AZ, L.L.C.
4895. CVS RS Riverside Parker AZ, L.L.C.
4896. CVS RS S. Central Ave. AZ, L.L.C.
4897. CVS RS S. Dobson Mesa AZ, L.L.C.
4898. CVS RS Scottsdale FLW AZ, L.L.C.
4899. CVS RS Scottsdale Rd AZ, L.L.C.
4900. CVS RS Sierra Vista AZ, L.L.C.
4901. CVS RS Silver Tuc AZ, L.L.C.
4902. CVS RS Sun City West AZ, L.L.C.
4903. CVS RS Sunrise Dr AZ, L.L.C.
4904. CVS RS Sunrise Surprise AZ, L.L.C.
4905. CVS RS Sunrise Tucson AZ, L.L.C.
4906. CVS RS Tanque Verde AZ, L.L.C.
4907. CVS RS Tatum Blvd AZ, L.L.C.
4908. CVS RS Thomas Rd AZ, L.L.C.
4909. CVS RS Thomas Scottsdale AZ, L.L.C.
4910. CVS RS W. Glendale Rd. AZ, L.L.C.
4911. CVS RS W. Peoria Ave AZ, L.L.C.
4912. CVS RS W. Southern AJ AZ, L.L.C.
4913. CVS RS W. Valencia Rd. AZ, L.L.C.
4914. CVS RS West Indian AZ, L.L.C.
4915. CVS RS Wickenburg Way AZ, L.L.C.
4916. CVS RS Yuma AZ, L.L.C.
4917. CVS Rt. 199 Williamsburg, Inc.
4918. CVS Rx Services, Inc.
4919. CVS Rye Route 1, L.L.C.
4920. CVS Rye Store, L.L.C.
4921. CVS Safir Sourcing UK, Ltd
4922. CVS Safir Sourcing, LLC
4923. CVS Salem Stateline, L.L.C.
4924. CVS Salmon Run, L.L.C.
4925. CVS San Dimas, L.P.
4926. CVS San Jacinto CA, L.L.C.
4927. CVS Santa Ana, L.P.
4928. CVS Saratoga Springs, L.L.C.
4929. CVS Saugerties Store, L.L.C.
4930. CVS Saunders Settlement Pharmacy, L.L.C.
4931. CVS Sayville, L.L.C.
4932. CVS SC Distribution, Inc.

4933. CVS SC Distribution, L.L.C.
4934. CVS Scarsdale Centre, L.L.C.
4935. CVS Scarsdale Store, L.L.C.
4936. CVS Schalks Crossing, L.L.C.
4937. CVS Schoolhouse, L.L.C.
4938. CVS Sea Cliff, L.L.C.
4939. CVS Seabrook, L.L.C.
4940. CVS Second Avenue NY, L.L.C.
4941. CVS Selden Store, L.L.C.
4942. CVS Seneca Mall, Inc.
4943. CVS Seneca Street, L.L.C.
4944. CVS Setauket, L.L.C.
4945. CVS Sharon Amity Charlotte, Inc.
4946. CVS Shaw Holdings Inc.
4947. CVS Sheepshead Bay, L.L.C.
4948. CVS Sheridan Harlem Store, L.L.C.
4949. CVS Sheridan Hollywood, L.L.C.
4950. CVS Ship Bottom, L.L.C.
4951. CVS Silver Spring, Inc.
4952. CVS Sixth Avenue NY, L.L.C.
4953. CVS Skippack, Inc.
4954. CVS Solomons MD, L.L.C.
4955. CVS South Albany Store, L.L.C.
4956. CVS South Canal Chicago, L.L.C.
4957. CVS South Farmingdale, L.L.C.
4958. CVS South Ogden, L.L.C.
4959. CVS South Salina Street, L.L.C.
4960. CVS South Schenectady Store, L.L.C.
4961. CVS Southwest Blvd, Inc.
4962. CVS SP 5897 FL, L.L.C.
4963. CVS Sparta, L.L.C.
4964. CVS State Capital, L.L.C.
4965. CVS State NY Store, L.L.C.
4966. CVS State Street, L.L.C.
4967. CVS Staten Island, L.L.C.
4968. CVS Stelton Road, L.L.C.
4969. CVS Stony Point, L.L.C.
4970. CVS Strategic Resources Private Limited
4971. CVS Stratford Barnum, Inc.
4972. CVS Stratford Nichols, Inc.
4973. CVS Stratham, L.L.C.
4974. CVS Suffern Store, L.L.C.
4975. CVS Sunrise Highway, L.L.C.
4976. CVS Surplus 8049 MI, L.L.C.
4977. CVS Syracuse Downtown, L.L.C.
4978. CVS Tampa 2802, L.L.C.
4979. CVS Tampa 3650, L.L.C.
4980. CVS Tarrytown Store, L.L.C.
4981. CVS Teaneck, L.L.C.
4982. CVS Tenafly Town, L.L.C.
4983. CVS Terry Road, L.L.C.
4984. CVS Thompsons Station, Inc.
4985. CVS Thornwood Columbus Avenue, L.L.C.
4986. CVS Thornwood Park, L.L.C.
4987. CVS TN Distribution, Inc.
4988. CVS TN Distribution, L.L.C.
4989. CVS Toms River, L.L.C.
4990. CVS Torrance CA, L.L.C.
4991. CVS Towson MD, L.L.C.
4992. CVS Transportation, Inc.
4993. CVS Transportation, L.L.C.
4994. CVS Trenton MI, L.L.C.
4995. CVS Trousdale Nashville, Inc.
4996. CVS Troy Fifth Street, L.L.C.
4997. CVS Troy Mall Store, L.L.C.
4998. CVS TX Holding Company, L.L.C.
4999. CVS Union, L.L.C.
5000. CVS University of Buffalo, L.L.C.
5001. CVS Upper Montclair, L.L.C.
5002. CVS Upper Valley Drug, L.L.C.
5003. CVS VA Distribution, Inc.
5004. CVS Valley Stream, L.L.C.
5005. CVS Van Nuys, L.P.
5006. CVS Vanguard, Inc.
5007. CVS Ventnor Dorset, L.L.C.
5008. CVS Vero FL Distribution, L.L.C.
5009. CVS Victory Boulevard, L.P.
5010. CVS Wading River, L.L.C.
5011. CVS Wallace Building, L.L.C.
5012. CVS Wanaque, L.L.C.
5013. CVS Wantagh Ave, L.L.C.
5014. CVS Warren, Inc.
5015. CVS Washington 6448, L.L.C.

5016. CVS Washington Avenue, L.L.C.
5017. CVS Washington Township, L.L.C.
5018. CVS Washington Wisconsin DC, L.L.C.
5019. CVS Washington, Inc.
5020. CVS Waterville Valley, L.L.C.
5021. CVS Waxhaw NC, L.L.C.
5022. CVS Wayne Turnpike, L.L.C.
5023. CVS Webster, L.L.C.
5024. CVS West Babylon, L.L.C.
5025. CVS West Gate, L.L.C.
5026. CVS West Haven, Inc.
5027. CVS West Hempstead, L.L.C.
5028. CVS West Islip, L.L.C.
5029. CVS West Orange, L.L.C.
5030. CVS West Park Avenue, L.L.C.
5031. CVS West Side Store, L.L.C.
5032. CVS Westbrook Maine, L.L.C.
5033. CVS Westchester Square, L.L.C.
5034. CVS Westchester Store, L.L.C.
5035. CVS Western Avenue, L.L.C.
5036. CVS Westwood LA, L.P.
5037. CVS Weyman Avenue, L.L.C.
5038. CVS Weymouth 1853, L.L.C.
5039. CVS White Plains Road, L.L.C.
5040. CVS Whittier, L.P.
5041. CVS Wilbraham MA, Inc.
5042. CVS Williamstown, L.L.C.
5043. CVS Williamsville Store, L.L.C.
5044. CVS Williston Park, L.L.C.
5045. CVS Wilton, L.L.C.
5046. CVS Wisconsin Avenue DC, L.L.C.
5047. CVS Wisteria Drive, L.L.C.
5048. CVS Woodbridge Main Street, L.L.C.
5049. CVS Woodbury Mullica, L.L.C.
5050. CVS Woodward, Inc.
5051. CVS WWRE, Inc.
5052. CVS Wyckoff, L.L.C.
5053. CVS Wynantskill, L.L.C.
5054. CVS Yonkers Broadway, L.L.C.
5055. CVS Yonkers, L.L.C.
5056. CVS Yorktown Heights Store, Inc.
5057. CVS Yorkville, L.L.C.
5058. CVS.com OTC, L.L.C.
5059. CVS/pharmacy Charitable Trust, Inc.
5060. CVS-SHC Kidney Care Home Dialysis of Austin LLC
5061. CVS-SHC Kidney Care Home Dialysis of Los Angeles LLC
5062. CVS-SHC Kidney Care Home Dialysis of Philadelphia LLC
5063. CVS-SHC Renal Holdings LLC
5064. Cypress California CVS, Inc.
5065. Cypress Jones CVS, L.P.
5066. Cypress Naples CVS, L.L.C.
5067. Cypresswood Houston CVS, L.P.
5068. D&R Pharmaceutical Services, LLC
5069. D.A.W., LLC
5070. Dacula CVS, Inc.
5071. Dairy Ashford CVS, L.P.
5072. Dale City VA CVS, Inc.
5073. Dale Mabry CVS, Inc.
5074. Dallas GA CVS, Inc.
5075. Dallas PharmaCare Pharmacy, L.L.C.
5076. Dallas ProCare Pharmacy, Inc.
5077. Dallas Waugh CVS, L.P.
5078. Damen Chicago CVS, L.L.C.
5079. Dan Ridge CVS, Inc.
5080. Danbury Central CVS, Inc.
5081. Danbury CVS, Inc.
5082. Danbury Fair CVS, Inc.
5083. Danbury MRC, Inc.
5084. Danbury South Main CVS, Inc.
5085. Danvers Plaza CVS, Inc.
5086. Darien CVS, Inc.
5087. Dartmouth Retailer, Inc.
5088. Davenport FL CVS, L.L.C.
5089. Davison CVS, Inc.
5090. DBD Nocigs 2019-1 LLC
5091. DBD Nocigs 2019-15 LLC
5092. DBD Nocigs 2019-16 LLC
5093. DBD Nocigs 2019-2 LLC
5094. DBD Nocigs 2019-21 LLC

5095. DBD Nocigs 2019-22 LLC
5096. DBD Nocigs 2019-23 LLC
5097. DBD Nocigs 2019-24 LLC
5098. DBD Nocigs 2019-25 LLC
5099. DBD Nocigs 2019-29 LLC
5100. DBD Nocigs 2019-41 LLC
5101. DBD Nocigs 2019-42 LLC
5102. DBD Nocigs 2019-43 LLC
5103. DBD Nocigs 2019-44 LLC
5104. DBD Nocigs 2019-45 LLC
5105. DBD Nocigs 2019-5 LLC
5106. DBD Nocigs 2019-7 LLC
5107. DBD Nocigs 2019-8 LLC
5108. De Soto CVS, L.P.
5109. Decatur CVS, Inc.
5110. Dedham CVS, Inc.
5111. Dedham High Street CVS, Inc.
5112. Deer Park Avenue CVS, Inc.
5113. Del Amo CVS, Inc.
5114. Del Prado CVS, L.L.C.
5115. Delaware CVS Pharmacy, L.L.C.
5116. Delaware Physicians Care - Medicare, Incorporated
5117. Delaware Physicians Care, Incorporated
5118. Delco Apothecary, Inc.
5119. Delran CVS, Inc.
5120. Delta Health HMO, Inc.
5121. Delta Risk Management, L.L.C.
5122. Deltona CVS, L.L.C.
5123. Denver PharmaCare Pharmacy, L.L.C.
5124. Denville CVS, Inc.
5125. Depew Broadway CVS, Inc.
5126. Depew CVS, Inc.
5127. Depot St. CVS, Inc.
5128. Deptford CVS, Inc.
5129. Derby Center CVS, Inc.
5130. Derry Street CVS, Inc.
5131. Des Plaines CVS, L.L.C.
5132. Desert Buffalo CVS, L.L.C.
5133. Desert Eastern CVS, L.L.C.
5134. Desert Inn CVS, L.L.C.
5135. Destin FL CVS, L.L.C.
5136. Detroit CVS, Inc.
5137. Detroit Greenfield CVS, Inc.
5138. Dexter Plaza CVS, Inc.
5139. DG Danville KY LLC
5140. DG Wesley Chapel FL LLC
5141. Diamond Bar CVS, Inc.
5142. Digital eHealth, LLC
5143. Digital Enterprise Realty, L.L.C.
5144. District of Columbia CVS Pharmacy, L.L.C.
5145. Division CVS, L.L.C.
5146. Dobbs Ferry CVS, Inc.
5147. Donlon Distributing, Inc.
5148. Dorchester Lower Mills CVS, Inc.
5149. Dothan CVS, Inc.
5150. Doubleday Ballston CVS, L.L.C.
5151. Douglassville PA CVS, Inc.
5152. Douglasville CVS, Inc.
5153. Dover Delaware CVS, Inc.
5154. Dover NJ CVS, L.L.C.
5155. Dover Randolph CVS, L.L.C.
5156. Dowagiac Clinton Stores, Inc.
5157. Downers Grove CVS, L.L.C.
5158. Downingtown CVS, Inc.
5159. Downtown Miami CVS, L.L.C.
5160. Doylestown CVS, Inc.
5161. Dragon Acquisition Company
5162. Drexel Hill CVS, Inc.
5163. Driftwood Shopping Center CVS, Inc.
5164. Drogaria Onofre Ltda.
5165. Drug World, Inc.
5166. Drugs For Less, Inc.
5167. Drumhill CVS, Inc.
5168. Duarte CVS, Inc.
5169. Dudley Street CVS, Inc.
5170. Duke Street CVS, Inc.
5171. Duluth CVS, Inc.
5172. Duncan SC CVS, Inc.
5173. Dundee Elgin CVS, L.L.C.
5174. Dunedin CVS, L.L.C.
5175. Dunellen CVS, Inc.

5176. Dunkirk Marketplace CVS, Inc.
5177. Dunkirk Marketplace Peoples, Inc.
5178. Dunlap Phoenix CVS, L.L.C.
5179. Dunlop Farms CVS, Inc.
5180. Dupont Circle CVS Realty, Inc.
5181. Durham NC CVS, Inc.
5182. Dyckman Street CVS, L.L.C.
5183. Dynamite Phoenix CVS, L.L.C.
5184. E. Arrow Hwy CVS, L.L.C.
5185. E. T. B., Inc.
5186. e.BENEFITS, INC.
5187. Eagan MN CVS, L.L.C.
5188. Eagle Valley CVS, Inc.
5189. Eagles Landing CVS, Inc.
5190. East 161st Street CVS, Inc.
5191. East Avenue CVS, Inc.
5192. East Bay Drive CVS, Inc.
5193. East Boston CVS, Inc.
5194. East Bradford Plaza CVS, Inc.
5195. East Bridgewater CVS, Inc.
5196. East Brunswick CVS, Inc.
5197. East Flatbush CVS, L.L.C.
5198. East Greenwich CVS, Inc.
5199. East Hampton CVS, Inc.
5200. East Hanover CVS, Inc.
5201. East Hartford CVS, Inc.
5202. East Hartford-Main Street CVS, Inc.
5203. East Haven Main Street CVS, Inc.
5204. East Haverhill Retailer, Inc.
5205. East Hills CVS, Inc.
5206. East Longmeadow CVS, Inc.
5207. East Main Bridgeport CVS, Inc.
5208. East Main St. at Westborough CVS, Inc.
5209. East Market CVS, Inc.
5210. East Market Street CVS, L.L.C.
5211. East Northport CVS, L.L.C.
5212. East Providence CVS, Inc.
5213. East Putnam Avenue CVS, Inc.
5214. East Side CVS, Inc.
5215. East Wareham CVS, Inc.
5216. East Windsor CVS, L.L.C.
5217. Eastampton Township CVS, Inc.
5218. Eastern Avenue CVS, Inc.
5219. Eastfield CVS, Inc.
5220. Eastland CVS, Inc.
5221. Easton Ave. CVS, Inc.
5222. Easton CVS, Inc.
5223. Easton Maryland CVS, Inc.
5224. Easton Nazareth CVS, Inc.
5225. Easton Sullivan CVS, Inc.
5226. Easton Washington Street CVS, Inc.
5227. Easton, Mass. CVS, Inc.
5228. Eatontown CVS, Inc.
5229. Echo Merger Sub, Inc.
5230. Echo Merger Sub, LLC
5231. Eckerd Corporation (for assets / pharmacies acquired by CVS)
5232. Eckerd Corporation of Florida, Inc.
5233. Eckerd Drug Company (for assets / pharmacies acquired by CVS)
5234. Eckerd Drug Company of Florida, Inc.
5235. Eckerd Drug Company of Texas, Inc. (for assets / pharmacies acquired by CVS)
5236. Eckerd Drugs of Florida, Inc. (for assets / pharmacies acquired by CVS)
5237. Eckerd Drugs of Georgia, Inc. (for assets / pharmacies acquired by CVS)
5238. Eckerd Drugs of Louisiana, Inc. (for assets / pharmacies acquired by CVS)
5239. Eckerd Drugs of Mississippi, Inc. (for assets / pharmacies acquired by CVS)
5240. Eckerd Drugs of North Carolina, Inc. (for assets/pharmacies acquired by CVS)
5241. Eckerd Drugs of South Carolina, Inc. (for assets / pharmacies acquired by CVS)

5242. Eckerd Drugs of Texas, Inc. (for assets / pharmacies acquired by CVS)
5243. Eckerd Drugs, Inc. (for assets / pharmacies acquired by CVS)
5244. Eckerd Drugsmarts, Inc. (for assets / pharmacies acquired by CVS)
5245. Eddystone CVS, Inc.
5246. Edgewater CVS, Inc.
5247. Edgewater NJ CVS, L.L.C.
5248. Edgewater Orlando CVS, L.L.C.
5249. Edgewood CVS, Inc.
5250. Edison Wooding CVS, Inc.
5251. Efmile, Inc.
5252. Egg Harbor NJ CVS, L.L.C.
5253. Egypt Audubon CVS, Inc.
5254. eHealth Solutions, Inc.
5255. Eighth New York CVS, L.L.C.
5256. El Camino Houston CVS, L.P.
5257. Electric Avenue CVS, Inc.
5258. Eleventh Street CVS, Inc.
5259. Elgin CVS, L.L.C.
5260. Eliot CVS, Inc.
5261. Elizabeth Westfield Avenue CVS, Inc.
5262. Elkhorn Las Vegas CVS, L.L.C.
5263. Elkhorn NV CVS, L.L.C.
5264. Ellicott City CVS, Inc.
5265. Elliot Tempe CVS, L.L.C.
5266. Ellwood City CVS, L.L.C.
5267. Elmhurst CVS, L.L.C.
5268. Elmora CVS, Inc.
5269. Emerald Square CVS, Inc.
5270. Emmaus Avenue CVS, Inc.
5271. Emmaus, Pennsylvania, CVS, Inc.
5272. Employee Assistance Services, LLC
5273. Enfield CVS, Inc.
5274. Enfield Elm CVS, Inc.
5275. Enfield Phoenix CVS, Inc.
5276. Engleside Plaza CVS, Inc.
5277. Engleside Plaza Peoples, Inc.
5278. Englewood Cliffs CVS, Inc.
5279. Englewood CVS, Inc.
5280. Enloe Drugs LLC
5281. Ennis TX CVS, L.P.
5282. Enterprise Patient Safety Organization, LLC
5283. Erdenheim Saints CVS, Inc.
5284. Eric C. Marshall, M.D. P.C.
5285. Erie CVS, Inc.
5286. Escalante Solutions, LLC
5287. Essence, Inc.
5288. Essex Eastern CVS, Inc.
5289. Essex Martin CVS, Inc.
5290. Essex St. (Salem) CVS, Inc.
5291. Estero Coconut CVS, L.L.C.
5292. Estero Three Oaks CVS, L.L.C.
5293. Estroff Pharmacy Incorporated
5294. ETHIX Care, Inc.
5295. ETHIX Midlands, Inc.
5296. ETHIX Northwest Public Services, Inc.
5297. ETHIX Northwest, Inc.
5298. Euclid Square CVS, Inc.
5299. Evanston IL CVS, L.L.C.
5300. Everett MA CVS, Inc.
5301. Evergreen City CVS, L.L.C.
5302. Evergreen Pharmaceutical of California, Inc.
5303. Evergreen Pharmaceutical of California, LLC
5304. Evergreen Pharmaceutical, LLC
5305. Evergreen Plaza CVS, Inc.
5306. Evesboro CVS, Inc.
5307. Evesham NJ CVS, L.L.C.
5308. Ewing NJ CVS, L.L.C.
5309. Exchange Place CVS, Inc.
5310. Exeter Square CVS, Inc.
5311. Express Pharmacy Services of FL, L.L.C.
5312. Express Pharmacy Services of MO, L.L.C.
5313. Express Pharmacy Services of PA, L.L.C.
5314. Fairfax CVS, Inc.
5315. Fairfax Main Street CVS, Inc.

5316. Fairfax Mall CVS, Inc.
5317. Fairfax Peoples, Inc.
5318. Fairfax Route 29 CVS, Inc.
5319. Fairfield CVS, Inc.
5320. Fairfield Plaza CVS, Inc.
5321. Fairfield Rt. 1 CVS, Inc.
5322. Fairhaven CVS, Inc.
5323. Fairlane CVS, Inc.
5324. Fairlane Village Mall CVS, Inc.
5325. Fairmont Pasadena CVS, L.P.
5326. Fairmount CVS Store, Inc.
5327. Fairview CVS, Inc.
5328. Fairview Township CVS, Inc.
5329. Fall River Retailer, Inc.
5330. Fall River-President CVS, Inc.
5331. Fallbrook Houston CVS, L.P.
5332. Falls Church CVS, Inc.
5333. Falls of Neuse CVS, Inc.
5334. Falls Road CVS, Inc.
5335. Falmouth CVS, Inc.
5336. Falmouth Ferry CVS, Inc.
5337. Falmouth Mall CVS, Inc.
5338. Falmouth Plaza CVS, Inc.
5339. Family Health Plan (FHP), Inc.
5340. Family Health Plan Corporation
5341. Farmingdale CVS, Inc.
5342. Farmington Ave. CVS, Inc.
5343. Farmington CVS, Inc.
5344. Farmington Holdings, Inc.
5345. Farmington Plaza CVS, Inc.
5346. Farmingville CVS Store, Inc.
5347. Fashion Square CVS, Inc.
5348. FDG C41 AR Texarkana LLC
5349. FEASIBLE ALTERNATIVES LIMITED
5350. Feasterville CVS, Inc.
5351. Federal Highway ProCare Pharmacy, Inc.
5352. Fenton Avenue CVS, L.L.C.
5353. Ferrara & Orlando Nurse Practictioners-Family Health P.C.
5354. Ferrara Nurse Practitioner-Family Health, P.C.
5355. FHP Health Plan, Inc.
5356. Fifth Avenue Chess King, Inc.
5357. Fingerlakes CVS Store, Inc.
5358. Firestone Blvd CVS, L.L.C.
5359. First Avenue ProCare Pharmacy, L.L.C.
5360. First Choice of the Midwest LLC
5361. First Choice of the Midwest, Inc.
5362. First Colony CVS, L.P.
5363. First Financial Planner Services, Inc.
5364. First Health Group Corp.
5365. First Health Life & Health Insurance Company
5366. First Health Strategies, Inc.
5367. First Script Network Services, Inc.
5368. Fish Lake Maple Grove CVS, L.L.C.
5369. Fishkill CVS, Inc.
5370. Fitchburg PharmaCare Pharmacy, Inc.
5371. Fitchburg Retailer, Inc.
5372. Flagler 87th Miami CVS, L.L.C.
5373. Flagstone Church, LLC
5374. Flamingo Jones NV CVS, L.L.C.
5375. Flamingo Road CVS, L.L.C.
5376. Flatbush Avenue CVS, Inc.
5377. Flatbush Brooklyn CVS, L.L.C.
5378. Flatlands CVS, L.L.C.
5379. Flatwoods CVS, Inc.
5380. Fleetwood CVS Store, Inc.
5381. Flemington CVS, L.L.C.
5382. Flemington NJ CVS, L.L.C.
5383. Flora Midwest, L.L.C.
5384. Floral Jericho CVS, L.L.C.
5385. Florence CVS, Inc.
5386. Florence NJ CVS, Inc.
5387. Florham Park CVS, Inc.
5388. Florida Collaborative for Health Care Quality, LLC
5389. Florida CVS Pharmacy, L.L.C.
5390. Florida Health Plan Administrators, LLC

5391. Flower Mound CVS, L.P.
5392. Flushing CVS, Inc.
5393. FM 1960 Houston CVS, L.P.
5394. FM 359 TX CVS, L.L.C.
5395. FM 518 League City CVS, L.P.
5396. FM 529 Houston CVS, L.P.
5397. FOCUS Healthcare Management Associates, Inc.
5398. FOCUS HealthCare Management, Inc.
5399. Folsom CVS, Inc.
5400. Fontana Sierra CVS, L.L.C.
5401. Foothill La Verne CVS, Inc.
5402. Foothill Ranch CVS, Inc.
5403. Forbes Avenue CVS, Inc.
5404. Forest Drive CVS, Inc.
5405. Forest Hill MD CVS, L.L.C.
5406. Forest Hills CVS, Inc.
5407. Forest Hills NY CVS, L.L.C.
5408. Forest Hills Peoples, Inc.
5409. Forest Lane Dallas CVS, L.P.
5410. Forest Park CVS, Inc.
5411. Forest Park IL CVS, L.L.C.
5412. Forks Township CVS, Inc.
5413. Formerly Broad Axe CVS, Inc.
5414. Formerly Peoples Drug Stores, Inc
5415. Fort Foote CVS, Inc.
5416. Fort Lee Palisades CVS, Inc.
5417. Fort Mill SC CVS, Inc.
5418. Fort Pierce CVS, L.L.C.
5419. Fort Worth ProCare Pharmacy, Inc.
5420. Foster Nagle CVS, L.L.C.
5421. Foster Street CVS, Inc.
5422. Foundation Health Plan of San Bernardino, Incorporated
5423. Foundation Health, A Florida Health Plan, Inc.
5424. Foundation Health, An Alabama Health Plan, Inc.
5425. Fowler Tampa CVS, Inc.
5426. Fox Run CVS, Inc.
5427. Foxboro CVS, Inc.
5428. Foxon East Haven CVS, Inc.
5429. FPS of Connecticut, Inc.
5430. Fracisquito Sunset CVS, Inc.
5431. Framingham Concord CVS, Inc.
5432. Framingham CVS, Inc.
5433. Framingham Water St. CVS, Inc.
5434. Framingham Worcester CVS, Inc.
5435. Franconia Road CVS, Inc.
5436. Frankford Avenue CVS, Inc.
5437. Frankfort CVS, Inc.
5438. Franklin Avenue CVS, Inc.
5439. Franklin Central CVS, Inc.
5440. Franklin Mahwah CVS, L.L.C.
5441. Franklin Retailer, Inc.
5442. Franklin TN CVS, Inc.
5443. Franklin W. Central St. CVS, Inc.
5444. Fraser Garfield CVS, L.L.C.
5445. Frederick CVS, Inc.
5446. Freehold NJ CVS, L.L.C.
5447. Freeport Long Beach CVS, L.L.C.
5448. Fridley MN CVS, L.L.C.
5449. Friendly Hills Healthcare Network, Inc.
5450. Fries Mill CVS, Inc.
5451. Front Street CVS, Inc.
5452. Frontier Community Health Plans, Inc.
5453. Ft. Lauderdale CVS, Inc.
5454. Ft. Myers CVS, L.L.C.
5455. Fullerton CVS, Inc.
5456. Futrix Inc.
5457. Futrix Limited
5458. G Street CVS, Inc.
5459. Gahanna OH CVS, Inc.
5460. Gainesville CVS, Inc.
5461. Gainesville FL CVS, L.L.C.
5462. Gaithersburg Mall CVS, Inc.
5463. Gaithersburg, MD Bob's, Inc.
5464. Gallivan CVS, Inc.
5465. Galloway CVS, Inc.
5466. Gandy CVS, Inc.
5467. Garden City CVS, Inc.
5468. Garden Grove CVS, Inc.
5469. Garden State HMO

5470. Gardner CVS, Inc.
5471. Garfield Beach CVS, L.L.C.
5472. Garfield CVS, Inc.
5473. Garland CVS, L.P.
5474. Garson Culver CVS, Inc.
5475. Garth Baytown CVS, L.P.
5476. Garwood Chestnut CVS, Inc.
5477. Gastonia CVS, Inc.
5478. Gate City CVS, Inc.
5479. Gatti LTC Services, Inc.
5480. Generation Health, L.L.C.
5481. Genesis Health Services Corp.
5482. Genesis Health Ventures, Inc.
5483. Geneva Carol CVS, L.L.C.
5484. Geneva Clinton Stores, Inc.
5485. Geneva Woods Health Services, LLC
5486. Geneva Woods LTC Pharmacy, LLC
5487. Geneva Woods Management, LLC
5488. Geneva Woods Pharmacy Alaska, LLC
5489. Geneva Woods Pharmacy Washington, LLC
5490. Geneva Woods Pharmacy Wyoming, LLC
5491. Geneva Woods Pharmacy, Inc.
5492. Geneva Woods Pharmacy, LLC
5493. Geneva Woods Retail Pharmacy, LLC
5494. Genito Midlothian CVS, Inc.
5495. GenPlus Managed Care, Inc.
5496. George Safran, M.D., P.C.
5497. Georgetown CVS, Inc.
5498. Georgetown OH CVS, L.L.C.
5499. Georgia CVS Pharmacy, L.L.C.
5500. Georgia Health System, Inc.
5501. German Dobson CVS, L.L.C.
5502. Germantown Avenue CVS, Inc.
5503. Germantown MD CVS, L.L.C.
5504. Gessner Philippine Houston CVS, L.P.
5505. Gibbsboro NJ CVS, L.L.C.
5506. Gilbert AZ CVS, L.L.C.
5507. Gilbert Guadalupe CVS, L.L.C.
5508. Gilbert Warner CVS, L.L.C.
5509. Gilbertsville CVS, Inc.
5510. Girard Avenue ProCare Pharmacy, Inc.
5511. Gladiolus Ft. Myers CVS, L.L.C.
5512. Glastonbury CVS, Inc.
5513. Glebe Road CVS, Inc.
5514. Glebe Road Peoples, Inc.
5515. Glen Allen CVS, Inc.
5516. Glen Burnie MD CVS, L.L.C.
5517. Glen Ellyn IL CVS, L.L.C.
5518. Glen Oaks CVS, L.L.C.
5519. Glendale Avenue CVS, L.P.
5520. Glendale CVS, L.L.C.
5521. Glendale Galleria CVS, Inc.
5522. Glendale Heights CVS, L.L.C.
5523. Glendale NY CVS, L.L.C.
5524. Glendora Foothill CVS, Inc.
5525. Glenriddle CVS, Inc.
5526. Glenview CVS, L.L.C.
5527. Glenwood Avenue CVS, Inc.
5528. Global Claim Services, L.C.
5529. Gloucester Downtown CVS, Inc.
5530. Gloucester Retailer, Inc.
5531. Gloucester-Erial CVS, Inc.
5532. Godfrey Avenue CVS, Inc.
5533. Godshall Franconia CVS, Inc.
5534. Gold Star Blvd. PharmaCare Pharmacy, Inc.
5535. Golden West CVS, Inc.
5536. Goldenrod CVS, Inc.
5537. Goodhealth Worldwide (Americas) Limited
5538. Goodhealth Worldwide (Asia Pacific) Limited
5539. Goodhealth Worldwide (Asia Pacific) Ltd.
5540. Goodhealth Worldwide (Asia) Limited
5541. Goodhealth Worldwide (Bermuda) Limited

5542. Goodhealth Worldwide (Europe) Limited
5543. Goodhealth Worldwide (Global) Limited
5544. Goodhealth Worldwide (Middle East) LLC
5545. Goodhealth Worldwide (Shanghai) Limited
5546. Goodhealth Worldwide Administrators Inc.
5547. Goodhealth Worldwide Limited
5548. Goodhealth Worldwide Management FZ-LLC
5549. Goodlette Naples CVS, L.L.C.
5550. Goodwin Park CVS, Inc.
5551. Goodyear CVS, LLC
5552. Gordon's Corner CVS, Inc.
5553. Goshen Village CVS, Inc.
5554. Governors Boulevard CVS, Inc.
5555. Grafton CVS, Inc.
5556. Grafton Street CVS, Inc.
5557. Graham Charlotte CVS, Inc.
5558. Granby CVS, Inc.
5559. Grand Baldwin CVS, Inc.
5560. Grand Bay CVS, Inc.
5561. Grand Covina CVS, Inc.
5562. Grand Prairie CVS, L.P.
5563. Grand River CVS, Inc.
5564. Grand Schaefer CVS, Inc.
5565. Grand St. Paul CVS, L.L.C.
5566. Grand Street CVS, L.L.C.
5567. Grandview Healthcare, Inc.
5568. Grandview Healthcare, LLC
5569. Grandview Pharmacy, Inc.
5570. Grandview Pharmacy, LLC
5571. Granite Run CVS, Inc.
5572. Granite Street CVS, Inc.
5573. Grapevine CVS, L.P.
5574. Gratiot CVS, Inc.
5575. Gray Houston CVS, L.P.
5576. Gray's Southgate, Inc.
5577. Grayson GA CVS, Inc.
5578. Great Valley CVS, Inc.
5579. Greece Clinton Paine, Inc.
5580. Greece CVS, Inc.
5581. Greece Towne CVS, Inc.
5582. Green Hills Plaza CVS, Inc.
5583. Greenacres CVS, Inc.
5584. Greenbelt CVS, Inc.
5585. Greenbelt-Cherrywood CVS, Inc.
5586. Greenbriar Houston CVS, L.P.
5587. Greencastle PA CVS, Inc.
5588. Greendale Mall CVS, Inc.
5589. Greenfield Federal CVS, Inc.
5590. Greenfield-Cherry Rum CVS, Inc.
5591. Greenlawn CVS, Inc.
5592. Greensboro GA CVS, Inc.
5593. Greenville CVS, Inc.
5594. Greenway Surprise CVS, L.L.C.
5595. Greenwich 99 CVS, Inc.
5596. Greenwich CVS, Inc.
5597. Greenwood Lake CVS, L.L.C.
5598. Grosse Pointe Realty, L.L.C.
5599. Groton CVS, Inc.
5600. Group Dental Service of Maryland, Inc.
5601. Group Dental Service, Inc.
5602. Group Dental Services, Inc.
5603. Group Health Plan of Delaware, LLC
5604. Group Health Plan, Inc.
5605. Grove City CVS, Inc.
5606. Guilford CVS, Inc.
5607. Gun Hill Road CVS, L.L.C.
5608. Gurnee CVS, L.L.C.
5609. Gwinnett CVS, Inc.
5610. GWL (UK) Limited
5611. H.M.S.S., Inc.
5612. Hackensack CVS, L.L.C.
5613. Haddon Heights CVS, L.L.C.
5614. Hadley CVS, Inc.
5615. Hallandale FL CVS, L.L.C.
5616. Haltom City CVS, L.P.
5617. Hamburg Clinton Stores, Inc.
5618. Hamburg Turnpike CVS, Inc.
5619. Hamden Plaza CVS, Inc.

5620. Hamden Retailer, Inc.
5621. Hamden Whitney CVS, Inc.
5622. Hamilton CVS, Inc.
5623. Hamilton CVS, L.L.C.
5624. Hamilton Klockner CVS, Inc.
5625. Hamilton Parkway CVS, L.L.C.
5626. Hamilton Plaza CVS, Inc.
5627. Hamlin CVS, Inc.
5628. Hanover CVS, L.L.C.
5629. Hanover Mass. CVS, Inc.
5630. Hanover Park CVS, L.L.C.
5631. Hanover Shaw Plaza CVS, Inc.
5632. Hanover-Pembroke CVS, Inc.
5633. Hanson CVS, Inc.
5634. Harbor Mall CVS, Inc.
5635. Harbor Santa Ana CVS, L.P.
5636. Harborside CVS, Inc.
5637. Harbour Place CVS, Inc.
5638. Hard Columbus CVS, L.L.C.
5639. Hardscrabble CVS, Inc.
5640. Harlem Chicago CVS, L.L.C.
5641. Harleysville PA CVS, Inc.
5642. Harmon Las Vegas CVS, L.L.C.
5643. Harrisburg CVS, Inc.
5644. Harrisburg NC CVS, Inc.
5645. Harrison Bridge Road CVS, Inc.
5646. Harrison East Orange CVS, Inc.
5647. Harrison Township CVS, Inc.
5648. Hartford Blue Hills CVS, Inc.
5649. Hartford Main Street CVS, Inc.
5650. Harvard Square CVS, Inc.
5651. Harwich CVS, Inc.
5652. Harwichport Main Street CVS, Inc.
5653. Hatfield PA CVS, Inc.
5654. Haverford and City Line CVS, Inc.
5655. Haverford Avenue CVS, Inc.
5656. Haverhill CVS, Inc.
5657. Haverhill Lowell CVS, Inc.
5658. Havertown CVS, Inc.
5659. Haw Creek Circle CVS, Inc.
5660. Hawaiian Gardens CVS, Inc.
5661. Hawley CVS, Inc.
5662. Hawthorne CVS, Inc.
5663. Haymarket VA CVS, Inc.
5664. Hazel Crest CVS, L.L.C.
5665. Hazlet CVS, Inc.
5666. Hazleton CVS, Inc.
5667. Hazleton Plaza CVS Inc.
5668. HCP Acquisition Sub, LLC
5669. Heacock Moreno CVS, L.L.C.
5670. Health America Corporation of Pennsylvania, Inc.
5671. Health and Human Resource Center
5672. Health and Human Resource Center Medical Group, Inc.
5673. Health and Human Resource Center, Inc.
5674. Health Care Management Co. Ltd.
5675. Health Care USA of Tennessee, Inc
5676. Health Cost Consultants, Inc.
5677. Health Data & Management Solutions, Inc.
5678. Health Integration Strategies, L.P.
5679. Health Integration, Inc.
5680. Health Maintenance Organization of New Jersey, Inc.
5681. Health Mart, Inc.
5682. Health Re, Inc.
5683. Healthagen International Limited
5684. Healthagen LLC
5685. HealthAmerica Pennsylvania, Inc.
5686. HealthAssurance Financial Services, Inc.
5687. HealthAssurance Pennsylvania, Inc.
5688. HealthCare America Plans, Inc.
5689. HealthCare USA of Missouri L.L.C.
5690. HealthInfusion, Inc.
5691. Healthmart, Inc.
5692. Healthmaster, Inc.
5693. HealthPASS, Inc.
5694. HealthPlus, Inc.
5695. HealthWays of New York, Inc.
5696. Heartland Healthcare Services, LLC
5697. Heartland Pharmacy of Illinois LLC
5698. Heartland Pharmacy of Maryland, LLC

5699. Heartland Pharmacy of PA, LLC
5700. Heartland Repack Services LLC
5701. Hebron CT CVS, Inc.
5702. Hebron Parkway CVS, L.P.
5703. Hedges Pond CVS, Inc.
5704. Hellertown CVS, Inc.
5705. Hempstead Avenue CVS, Inc.
5706. Hempstead NY CVS, L.L.C.
5707. Henderson CVS, L.L.C.
5708. Henderson Horizon CVS, L.L.C.
5709. Henderson Road CVS, Inc.
5710. Hennepin Avenue CVS, L.L.C.
5711. Henry Philadelphia CVS, Inc.
5712. Henry Street CVS, L.L.C.
5713. Henrydale CVS, Inc.
5714. Hermosa Beach CVS, Inc.
5715. Hewlett CVS, Inc.
5716. HHPF, Inc.
5717. HHRC, Inc.
5718. Hialeah CVS, L.L.C.
5719. Hialeah West 49th CVS, L.L.C.
5720. Hick Hwy CVS, Inc.
5721. Hickory CVS, Inc.
5722. Hickory Hills IL CVS, L.L.C.
5723. High House Road CVS, Inc.
5724. High Ridge Road CVS, Inc.
5725. High Street CVS, Inc.
5726. Highland Avenue CVS, Inc.
5727. Highland Center CVS, Inc.
5728. Highland Cheshire CVS, Inc.
5729. Highland Leasing Corporation
5730. Highland Market CVS, Inc.
5731. Highland Park CVS, L.L.C.
5732. Highlander Plaza CVS, Inc.
5733. Highway 14 SC CVS, Inc.
5734. Highway 17 Mt. Pleasant CVS, Inc.
5735. Highway 19 Palm Harbor CVS, L.L.C.
5736. Highway 92 CVS, Inc.
5737. Highway 98 CVS, Inc.
5738. Highway Charlotte CVS, Inc.
5739. Highway Stockbridge CVS, Inc.
5740. Hillcrest Frisco CVS, L.P.
5741. Hillcroft Houston CVS, L.P.
5742. Hilliard Darby CVS, Inc.
5743. Hilliard Park Mill CVS, Inc.
5744. Hillsboro Road CVS, L.L.C.
5745. Hillsborough Avenue CVS, L.L.C.
5746. Hillsborough CVS, Inc.
5747. Hillside Amarillo TX CVS, L.L.C.
5748. Hillside Avenue CVS, L.L.C.
5749. Hillside CVS, Inc.
5750. Hillside IL CVS, L.L.C.
5751. Hilltop Air Corporation
5752. Hilltown PA CVS, Inc.
5753. Hingham CVS, Inc.
5754. HIP Health Plan of Florida, Inc.
5755. HMIS, Inc.
5756. HMO Of Greater New York, Inc.
5757. HMO of Iowa, Inc.
5758. HMO of New Jersey, Inc.
5759. HMS Colorado, Inc.
5760. HMS Healthcare, Inc.
5761. Hoadley Rd CVS, Inc.
5762. Hokes Bluff CVS, Inc.
5763. Holbrook CVS, Inc.
5764. Holcomb CVS, Inc.
5765. Holden Common CVS, Inc.
5766. Holden PharmaCare Pharmacy, Inc.
5767. Holiday CVS, L.L.C.
5768. Holiday Hwy 19 CVS, L.L.C.
5769. Holliston CVS, Inc.
5770. Holly Springs CVS, Inc.
5771. Holyoke CVS, Inc.
5772. Holyoke Mall CVS, Inc.
5773. Holyoke South Street CVS, Inc.
5774. Home Care Pharmacy, LLC
5775. Home Pharmacy Services, LLC
5776. Homestead 312th FL CVS, L.L.C.
5777. Homestead CVS, L.L.C.
5778. Homeward Pharmacy, LLC
5779. Hook Drugs, Inc. of Michigan
5780. Hooker Avenue CVS, Inc.
5781. Hookset CVS, Inc.
5782. Hook-SupeRx Funding Corp.
5783. Hook-SupeRx, Inc.

5784. Hook-SupeRx, L.L.C.
5785. Hooper Road CVS, Inc.
5786. Hope Mills CVS, Inc.
5787. Hopewell CVS, Inc.
5788. Hopkins CVS, L.L.C.
5789. Horatio Orlando CVS, Inc.
5790. Horizon Behavioral Services, LLC
5791. Horsham CVS, Inc.
5792. Hospital CVS, Inc.
5793. Hospitality Holdings, Inc.
5794. Houston Main Elgin CVS, L.P.
5795. Houston ProCare Pharmacy, Inc.
5796. Houston TX CVS, L.P.
5797. Howell CVS, L.L.C.
5798. Hubbard Sylmar CVS, L.P.
5799. Hudson CVS, Inc.
5800. Hudson N.H. CVS, Inc.
5801. Huffmeister CVS, L.P.
5802. Humble CVS, L.P.
5803. Hunt Valley CVS, Inc.
5804. Huntersville NC CVS, Inc.
5805. Hunting Park CVS, Inc.
5806. Huntingdon Valley CVS, Inc.
5807. Huntington Beach CVS, Inc.
5808. Huntington Center CVS, Inc.
5809. Huntington CVS, Inc.
5810. Huntington Drive CVS, Inc.
5811. Huntington Station CVS, Inc.
5812. Huntington WV CVS, Inc.
5813. Huntsville AL CVS, Inc.
5814. Huntsville Moores Mill CVS, Inc.
5815. Huntsville Whitesburg CVS, Inc.
5816. Hurley MS CVS, Inc.
5817. Hurricane WV CVS, Inc.
5818. Hurst CVS, L.P.
5819. Hwy 544 MB CVS, Inc.
5820. Hyannis CVS, Inc.
5821. Hyannis Main Street CVS, Inc.
5822. Hyattsville CVS, Inc.
5823. Hyde Park Avenue CVS, Inc.
5824. Hytree Pharmacy, Inc.
5825. I.g.G. of America, Inc.
5826. I.g.G. of America, LLC
5827. Idaho CVS Pharmacy, L.L.C.
5828. IHS Acquisition XXX, Inc.
5829. IlliniCare Health Plan, Inc.
5830. Imperial CVS, Inc.
5831. Independence MI CVS, L.L.C.
5832. Independence Plano CVS, L.P.
5833. Independent Investments, Inc.
5834. Indian 59th Phoenix CVS, L.L.C.
5835. Indian Health Organisation Private Limited
5836. Indian School Phoenix CVS, L.L.C.
5837. Indian Trail CVS, Inc.
5838. Indiana CVS, Inc.
5839. Informed Health, LLC.
5840. Ingleside CVS, Inc.
5841. Inland Health Plan
5842. Inman Edison CVS, L.L.C.
5843. Inner Loop Georgetown CVS, L.L.C.
5844. Innovation Health Holdings, LLC
5845. Innovation Health Insurance Company
5846. Innovation Health Plan, Inc.
5847. Innovative Worldwide Distributors (HK) Limited
5848. Institutional Health Care Services LP
5849. Institutional Health Care Services, LLC
5850. Integrated Pharmacy Solutions, Inc.
5851. InterGlobal Holdco Limited
5852. InterGlobal Insurance Company Limited
5853. InterGlobal Japan Corporation Limted
5854. InterGlobal Limited
5855. Interlock Pharmacy Systems, LLC
5856. Iowa CVS Pharmacy, L.L.C.
5857. Ironbound CVS Urban Renewal, L.L.C.
5858. Irvine CA CVS, L.P.
5859. Irving CVS, L.P.
5860. Irving Park CVS, L.L.C.

5861. Irving Streamwood CVS, L.L.C.
5862. Irving Street CVS, Inc.
5863. Island Avenue CVS, Inc.
5864. Islington CVS, Inc.
5865. Ithaca CVS Store, Inc.
5866. iTriage, LLC
5867. Ives Dairy Miami CVS, L.L.C.
5868. Ivyland CVS, Inc.
5869. Ivyland PA CVS, Inc.
5870. J.F.K. Street CVS, Inc.
5871. Jacksboro Highway CVS, L.P.
5872. Jackson Heights CVS, L.L.C.
5873. Jackson NJ CVS, Inc.
5874. Jackson North West CVS, Inc.
5875. Jackson Square CVS, Inc.
5876. Jacksonville CVS, L.L.C.
5877. Jaguar Merger Subsidiary, Inc.
5878. Jamaica CVS, L.L.C.
5879. Jamaica Plain CVS, Inc.
5880. Jamesburg CVS, L.L.C.
5881. JEC Facilities Funding II, Inc.
5882. JEC Funding, Inc.
5883. JEC Funding, LLC
5884. Jefferson CVS, Inc
5885. Jefferson Havens Corner CVS, Inc.
5886. Jefferson Woodbridge CVS, Inc.
5887. Jenkintown CVS, Inc.
5888. Jennersville CVS, Inc.
5889. Jericho Huntington CVS, L.L.C.
5890. Jericho Turnpike CVS, Inc.
5891. Jersey Shore PA CVS, Inc.
5892. Jessup Deptford CVS, L.L.C.
5893. Jewel Ventures Fund GP, LLC
5894. Jewel Ventures Fund, LP
5895. Jewel Ventures Management, LLC
5896. JHC Acquisition LLC
5897. JOCUS LIMITED
5898. Jog Boynton Beach CVS, L.L.C.
5899. Jog Road CVS, L.L.C.
5900. Johnson Hollywood CVS, Inc.
5901. Johnston Centre CVS, Inc.
5902. Joliet CVS, L.L.C.
5903. Jones Hill CVS, Inc.
5904. Jonesboro CVS, Inc.
5905. Josey Carrollton CVS, L.P.
5906. Joy Lake Rd. CVS, Inc.
5907. JRT Investment, Inc.
5908. Jumpers Hole CVS, Inc.
5909. K HOME THERAPEUTICS, INC.
5910. K Street CVS, Inc.
5911. K Street Peoples, Inc.
5912. Kankakee IL CVS, L.L.C.
5913. Kannapolis CVS, Inc.
5914. Kansas CVS Pharmacy, L.L.C.
5915. Kearny CVS, Inc.
5916. Kedzie 59th CVS, L.L.C.
5917. Keene Key CVS, Inc.
5918. Keller CVS, L.P.
5919. Kendall Miami CVS, L.L.C.
5920. Kenmore Retailer, Inc.
5921. Kenmore Village CVS, Inc.
5922. Kennedy Tampa CVS, L.L.C.
5923. Kennesaw CVS, Inc.
5924. Kennesaw Due West CVS, Inc.
5925. Kennett Square CVS, Inc.
5926. Kensington CVS, Inc.
5927. Kentucky CVS Pharmacy, L.L.C.
5928. Kentwood CVS, Inc.
5929. Kern Home Health Resources d/b/a Coram Healthcare
5930. Key Biscayne CVS, Inc.
5931. Keyser CVS, L.L.C.
5932. Keystone Street CVS, Inc.
5933. Kildeer CVS, L.L.C.
5934. Kimberly J. Henderson, M.D., P.C.
5935. Kimberton Nutt CVS, Inc.
5936. King Cherry CVS, Inc.
5937. King Drug Company
5938. King of Prussia CVS, Inc.
5939. King Street CVS, Inc.
5940. Kings Crossing CVS, Inc.
5941. Kings Grant CVS, Inc.
5942. Kings Highway CVS, Inc.
5943. Kingsbury Square CVS, Inc.
5944. Kingsland Katy CVS, L.P.
5945. Kingston Emporium CVS, Inc.

5946. Kingston Market CVS, Inc.
5947. Kingston Road CVS, Inc.
5948. Kingsway Plaza CVS, Inc.
5949. Kingwood CVS, L.P.
5950. Kirby Houston CVS, L.P.
5951. Kirby Pearland CVS, L.P.
5952. Kisco East Main CVS, L.L.C.
5953. Kissimmee CVS, Inc.
5954. Knox Abbott Road CVS, Inc.
5955. Knoxville Emory CVS, Inc.
5956. Kostner Chicago CVS, L.L.C.
5957. Kraemer CA CVS, L.L.C.
5958. Krocks Road CVS, Inc.
5959. L Street CVS, Inc.
5960. L.F. Hamlin, Inc.
5961. La Cienega LA CVS, L.P.
5962. La Cienega Square CVS, Inc.
5963. La Mirada CVS, Inc.
5964. La Palma CVS, Inc.
5965. La Quinta CVS, L.L.C.
5966. Ladera Ranch CA CVS, L.P.
5967. Lafayette CVS, Inc.
5968. LaGrange CVS, L.L.C.
5969. Laguna Hills CVS, Inc.
5970. Laguna Niguel CVS, Inc.
5971. Lahser CVS, Inc.
5972. Lake Charles Ryan CVS, Inc.
5973. Lake Danbury CVS, Inc.
5974. Lake Forest CVS, Inc.
5975. Lake Forest CVS, L.L.C.
5976. Lake Grove CVS, Inc.
5977. Lake in the Hills CVS, L.L.C.
5978. Lake Mead Civic CVS, L.L.C.
5979. Lake Mead Las Vegas CVS, L.L.C.
5980. Lake Pleasant Peoria CVS, L.L.C.
5981. Lake Street CVS, Inc.
5982. Lake Worth Greenacres CVS, L.L.C.
5983. Lakeview Ave. CVS, Inc.
5984. Lakeview Plaza CVS, Inc.
5985. Lakeview Square CVS, Inc.
5986. Lakeville MN CVS, L.L.C.
5987. Lakeway TX CVS, L.L.C.
5988. Lakewood CA CVS, L.L.C.
5989. Lakewood Square CVS, Inc.
5990. Lambertville NJ CVS, L.L.C.
5991. Lancaster 10th CVS, L.L.C.
5992. Lancaster CVS, Inc.
5993. Landis Avenue CVS, Inc.
5994. Landisville CVS, Inc.
5995. Landmark Center CVS, Inc.
5996. Landstar Orlando CVS, L.L.C.
5997. Lanesborough Berkshire Mall CVS, Inc.
5998. Langsam Health Services, LLC
5999. Langsam Medical Products, Inc.
6000. Lansdowne Avenue CVS, Inc.
6001. Lansing CVS, Inc.
6002. LaPalma Anaheim CVS, Inc.
6003. Largo ProCare Pharmacy, Inc.
6004. Las Vegas NV CVS, L.L.C.
6005. Las Vegas Riviera CVS, L.L.C.
6006. Laurel MD CVS, L.L.C.
6007. Laurens Road CVS, Inc.
6008. Lavista Road CVS, Inc.
6009. Lawndale CA CVS, L.L.C.
6010. Lawndale CVS, Inc.
6011. Lawrence Broadway CVS, Inc.
6012. Lawrence Chicago CVS, L.L.C.
6013. Lawrenceville CVS, Inc.
6014. LCPS Acquisition LLC
6015. LDG Property Company, Inc.
6016. LDG Property Company, LLC
6017. Leading Benefit Solutions, LLC
6018. League City CVS, L.P.
6019. Ledgewood NJ CVS, L.L.C.
6020. Lee Highway CVS, Inc.
6021. Lee Highway Peoples, Inc.
6022. Lee Vista Orlando CVS, L.L.C.
6023. Lehigh Street CVS, Inc.
6024. Lehigh Valley CVS, Inc.
6025. Lemec CVS, L.L.C.
6026. Lemmon Dallas CVS, L.P.
6027. Lemont CVS, L.L.C.
6028. Lenox Avenue CVS, L.L.C.
6029. Leominster CVS, Inc.

6030. Leominster Lancaster CVS, Inc.
6031. Leominster Main Street CVS, Inc.
6032. Leominster PharmaCare Pharmacy, Inc.
6033. Levittown PA CVS, Inc.
6034. Lewisville CVS, L.P.
6035. Lexington CVS, Inc.
6036. Lexington Sugar CVS, L.P.
6037. LHS Acquisition Sub, LLC
6038. Liberty Little Ferry CVS, L.L.C.
6039. Liberty Park CVS, Inc.
6040. Liberty Road CVS, Inc.
6041. Liberty Street CVS, Inc.
6042. Library Road CVS, Inc.
6043. Lighthouse Point CVS, L.L.C.
6044. Lilburn CVS, Inc.
6045. Lilburn Harmony Grove CVS, Inc.
6046. Lima PA CVS, Inc.
6047. Limerick CVS, Inc.
6048. Lincoln Corona CVS, Inc.
6049. Lincoln CVS, Inc.
6050. Lincoln Drive (Phil) CVS, Inc.
6051. Lincoln Harbor CVS, Inc.
6052. Lincoln Park CVS, L.L.C.
6053. Lincoln Street CVS, Inc.
6054. Lindbergh CVS, Inc.
6055. Linden Retailer, Inc.
6056. Linden Street CVS, Inc.
6057. Linden Wellesley CVS, Inc.
6058. Lindenhurst CVS, L.L.C.
6059. Linwood CVS, Inc.
6060. Lionville CVS, Inc.
6061. Litchfield Park CVS, L.L.C.
6062. Litchfield Rt. 202 CVS, Inc.
6063. Little York CVS, L.P.
6064. Littleton Road CVS, Inc.
6065. Livingston CVS, Inc.
6066. Livonia 6 Mile CVS, Inc.
6067. Lobdell Goodwood CVS, Inc.
6068. Lobos Acquisition, LLC
6069. Lockport Clinton Stores, Inc.
6070. Lockport CVS, L.L.C.
6071. Locust Philadelphia CVS, Inc.
6072. Lodi CVS, Inc.
6073. Loehmann's Plaza CVS, Inc.
6074. Lombard CVS, L.L.C.
6075. Lombard-Light Streets CVS, Inc.
6076. Lo-Med Prescription Services, LLC
6077. Lomita CVS, Inc.
6078. Lone Oak KY CVS, Inc.
6079. Lone Star Health Plan, Inc.
6080. Lonestar Holding Co.
6081. Long Beach Boulevard CVS, L.P.
6082. Long Beach CVS, Inc.
6083. Long Hill Road CVS, Inc.
6084. Long Island CVS Store, Inc.
6085. Long Shoals Road CVS, Inc.
6086. Longmeadow Massachusetts CVS, Inc.
6087. Longmeadow Street CVS, Inc.
6088. Longs Drug Stores California, Inc.
6089. Longs Drug Stores California, L.L.C.
6090. Longs Drug Stores Corporation
6091. Longs Drug Stores, Inc.
6092. Longs Drug Stores, L.L.C.
6093. Long-Term Care Pharmacy Alliance, LLC
6094. Longwood Avenue CVS, Inc.
6095. Longwood CVS, Inc.
6096. Looch Hwy. CVS, Inc.
6097. Loop 610 Westheimer CVS, L.P.
6098. Loris SC CVS, Inc.
6099. Los Alamitos CVS, L.P.
6100. Los Angeles ProCare Pharmacy, Inc.
6101. Louetta Elderidge CVS, L.P.
6102. Louisiana CVS Pharmacy, L.L.C.
6103. Louisville CVS, Inc.
6104. Lowell Bridge CVS, Inc.
6105. Lowell Discounter, Inc.
6106. Lowell Merrimack CVS, Inc.
6107. Lowell Retailer, Inc.
6108. Lower Azusa Rd CVS, L.L.C.
6109. Lower Buckeye Phoenix CVS, L.L.C.

6110. Lower Buckley Avondale CVS, L.L.C.
6111. Lower Makefield CVS, Inc.
6112. Loyalty Life Insurance Company
6113. Ludlow Acquisition Corp.
6114. Ludlow CVS, Inc.
6115. Luettgens Limited
6116. LV Boulevard CVS, L.L.C.
6117. Lyell Clinton Paine, Inc.
6118. Lynn Boston Street CVS, Inc.
6119. Lynngate-Massachusetts CVS, Inc.
6120. Lynnway Lynn CVS, Inc.
6121. Lyon Twp CVS, L.L.C.
6122. M Street CVS, Inc.
6123. M Street Peoples, Inc.
6124. M Street Washington CVS, Inc.
6125. Mableton GA CVS, Inc.
6126. Mableton Parkway CVS, Inc.
6127. MacArthur Boulevard CVS, Inc.
6128. Macedon Clinton Stores, Inc.
6129. Mack Drug Co. of New Jersey, Inc.
6130. Mack Drug Co. of New York, Inc.
6131. Mack Drug Co. of Pittsfield, Inc.
6132. Macomb Township CVS, L.L.C.
6133. Madera Royale CVS, Inc.
6134. Madison Centre CVS, Inc.
6135. Madison Chicago CVS, L.L.C.
6136. Madison CVS, Inc.
6137. Madison Heights John R CVS, Inc.
6138. Magnolia Anaheim CVS, L.P.
6139. Magnum Health Plan, Inc.
6140. Main Alden CVS, Inc.
6141. Main Annapolis CVS, L.L.C.
6142. Main Devon Bartlett CVS, L.L.C.
6143. Main Harvard CVS, Inc.
6144. Main Houston CVS, L.P.
6145. Main Jefferson CVS, L.L.C.
6146. Main McKinney CVS, L.P.
6147. Main Montgomery CVS, L.L.C.
6148. Main Street Athol CVS, Inc.
6149. Main Street North CVS, Inc.
6150. Main Street Pharmacy, L.L.C.
6151. Main Vineland CVS, L.L.C.
6152. Main Wayland CVS, Inc.
6153. Maine CVS Pharmacy, L.L.C.
6154. Maine Retailer, Inc.
6155. Maine-Bangor CVS, Inc.
6156. Maineville CVS, Inc.
6157. Malaga CVS, Inc.
6158. Malden Broadway CVS, Inc.
6159. Malden Square CVS, Inc.
6160. Male Wind Gap CVS, Inc.
6161. Mall of New Hampshire CVS, Inc.
6162. Managed Care Coordinators, Inc.
6163. Managed HealthCare, Inc.
6164. Managed Healthcare, LLC
6165. Management & Network Services, Inc.
6166. Management and Network Services, L.L.C.
6167. Manalapan CVS, Inc.
6168. Manassas CVS, Inc.
6169. Manatee Bradenton CVS, L.L.C.
6170. Manayunk Plaza CVS, Inc.
6171. Manchester (N.H.) CVS, Inc.
6172. Manchester CVS, Inc.
6173. Manchester North Main CVS, Inc.
6174. Manhattan CVS, Inc.
6175. Manomet Route 3a CVS, Inc.
6176. Manor Road CVS, Inc.
6177. Mansfield CVS, Inc.
6178. Mansfield Shopping Center CVS, Inc.
6179. Manton Avenue CVS, Inc.
6180. Mantua NJ CVS, L.L.C.
6181. Manville CVS, Inc.
6182. Maple Avenue CVS, Inc.
6183. Maple Avenue NJ CVS, Inc.
6184. Maple Glen CVS, Inc.
6185. Maple Grove MN CVS, L.L.C.
6186. Maplewood CVS, L.L.C.
6187. Marblehead CVS, Inc.
6188. Margate CVS, Inc.
6189. Marguerite Parkway CVS, Inc.
6190. Maricopa CVS, L.L.C.
6191. Marietta CVS, Inc.

6192. Marietta Piedmont CVS, Inc.
6193. Mark Steven CVS, Inc.
6194. Market Street CVS, Inc.
6195. Marlboro CVS, Inc.
6196. Marlboro Village Center CVS, Inc.
6197. Marlborough Mall CVS, Inc.
6198. Marley Station CVS, Inc.
6199. Marlton Crossing CVS, Inc.
6200. Marsh Carrollton CVS, L.P.
6201. Marshalls of Citrus Heights, CA., Inc.
6202. Marshalls of Skokie IL, Inc.
6203. MARSHALLS OF TEMPE, AZ., INC.
6204. Marshfield Ocean CVS, Inc.
6205. Marshfield Webster CVS, Inc.
6206. Martin Health Services, Inc.
6207. Martin Health Services, LLC
6208. Mary Street CVS, Inc.
6209. Maryland CVS Pharmacy, L.L.C.
6210. Maryland Parkway CVS, L.L.C.
6211. Maryland St. Paul CVS, L.L.C.
6212. Mashpee CVS, Inc.
6213. Mason CVS, Inc.
6214. Maspeth NY CVS, L.L.C.
6215. Mass. Ave. and Alwife Brook CVS, Inc.
6216. Mass. Ave. CVS, Inc.
6217. Massachusetts Avenue CVS, L.L.C.
6218. Massachusetts CVS Pharmacy, Inc.
6219. Massachusetts CVS Pharmacy, L.L.C.
6220. Massapequa CVS, Inc.
6221. Mattapan MA CVS, Inc.
6222. Matthews CVS, Inc.
6223. Mattituck CVS, L.L.C.
6224. Mattydale Clinton Stores, Inc.
6225. MaxiCare/HealthAmerica Pennsylvania, Inc.
6226. Maxwell & Tennyson, Inc.
6227. May Street PharmaCare Pharmacy, Inc.
6228. Mayfield Collins CVS, L.P.
6229. Mayfield CVS, Inc.
6230. Maynard CVS, Inc.
6231. MC Diagnostic of Connecticut, P.C.
6232. MC RETAIL CORP.
6233. McCalla CVS, Inc.
6234. McDowell Phoenix CVS, L.L.C.
6235. McKeesport CVS, Inc.
6236. McKinney CVS, L.P.
6237. McNab Tamarac CVS, L.L.C.
6238. McNair Farms CVS, Inc.
6239. Mead Clinton Paine, Inc.
6240. Meadow Glen CVS, Inc.
6241. Meadowbrook Newark CVS, Inc.
6242. Meadville Clinton Stores, Inc.
6243. Med Southwest, Inc.
6244. Med World Acquisition Corp.
6245. Med World Acquisition, LLC
6246. Medco Discount Prescription Center, Inc.
6247. Medfield CVS, Inc.
6248. Medford Downtown CVS, Inc.
6249. Medford High CVS, Inc.
6250. Medford Retailer, Inc.
6251. Medford-Malden CVS, Inc.
6252. Media 452 CVS, Inc.
6253. Media CVS, Inc.
6254. Medical Arts Health Care, Inc.
6255. Medical Arts Health Care, LLC
6256. Medical Arts Pharmacy, Inc.
6257. Medical Center Pharmacies, Inc.
6258. Medical Examinations of New York, P.C.
6259. Medicare Drug Stores, Inc.
6260. Medicity LLC
6261. Medicity, Inc.
6262. Medisav, Inc.
6263. MedPartners Acquisition
6264. MedPartners Aviation, Inc.
6265. MedPartners Physician Services, Inc.
6266. MedPartners Professional Management Corporation
6267. MedPartners, Inc.

6268. MedPartners/Mullikin, Inc.
6269. MedPartners/Talbert Medical Management Corporation
6270. Medway CVS, Inc.
6271. Meeting House Road CVS, Inc.
6272. Melrose CVS, Inc.
6273. Melrose Park CVS, L.L.C.
6274. Melville Equipment Leasing Corp.
6275. Melville Realty Company, Inc.
6276. Melville Realty Management Corporation
6277. MemberHealth LLC
6278. Menifee Meadows Office Park Association
6279. Menlo Park CVS, Inc.
6280. Mental Health Associates, Inc.
6281. Mental Health Associates, Inc. of Lousiana, Inc.
6282. Mental Health Network of New York IPA, Inc.
6283. Merchant Plaza CVS, Inc.
6284. Merger LLC D, L.L.C.
6285. Meridan West Main CVS, Inc.
6286. Meriden CVS, Inc.
6287. Meriden Parkade CVS, Inc.
6288. Meriden Road CVS, Inc.
6289. Meridianville CVS, Inc.
6290. Meritain Health Group, Inc.
6291. Meritain Health, Inc.
6292. Merlen Drug CVS, Inc.
6293. Merrick CVS, Inc.
6294. Merrill University CVS, L.L.C.
6295. Merrimack Street CVS, Inc.
6296. Merritt Island CVS, L.L.C.
6297. Merwin IV & Specialty Pharmacy, LLC
6298. Merwin Long Term Care, Inc.
6299. Merwin Long Term Care, LLC
6300. Merwin Rx-Compounding Pharmacy, LLC
6301. Mesa Brown CVS, L.L.C.
6302. Mesquite CVS, L.P.
6303. Methuen Broadway CVS, Inc.
6304. Methuen CVS, Inc.
6305. Methuen Haverhill CVS, Inc.
6306. Methuen Swan CVS, Inc.
6307. MetraComp, Inc.
6308. Metro Boston CVS, Inc.
6309. MHHP Acquisition Company LLC
6310. MHNet Life and Health Insurance Company
6311. MHNet of Florida, Inc.
6312. MHNet Specialty Services, LLC
6313. Miami 147th CVS, L.L.C.
6314. Miami 2nd Avenue CVS, Inc.
6315. Miami 8th CVS, L.L.C.
6316. Miami Flagler CVS, Inc.
6317. Michigan Chicago CVS, L.L.C.
6318. Michigan CVS, Inc.
6319. Mid Cities Boulevard CVS, L.P.
6320. Middle River CVS, Inc.
6321. Middle Smithfield Township CVS, Inc.
6322. Middleboro CVS, Inc.
6323. Middlesex Lowell CVS, Inc.
6324. Middlesex-Mass. CVS, Inc.
6325. Middletown CVS, Inc.
6326. Middletown Township CVS, Inc.
6327. Middletown Washington CVS, Inc.
6328. Midland Clinton Stores, Inc.
6329. Midland Retailer, Inc.
6330. Midport Port St. Lucie CVS, L.L.C.
6331. Milford Broad St. CVS, Inc.
6332. Milford CVS, Inc.
6333. Milford PharmaCare Pharmacy, Inc.
6334. Milford Plaza CVS, Inc.
6335. Milford Square CVS, Inc.
6336. Military Trail CVS, Inc.
6337. Millbourne CVS, Inc.
6338. Millbury CVS, Inc.
6339. Millbury PharmaCare Pharmacy, Inc.
6340. Millcreek CVS, Inc.
6341. Miller Place CVS, L.L.C.
6342. Millis CVS, Inc.
6343. Mills Ave SEC CVS, L.L.C.

6344. Millville CVS, Inc.
6345. Milton Market Place CVS, Inc.
6346. Milwaukee Chicago CVS, L.L.C.
6347. Mineola Jericho CVS, Inc.
6348. Mineral Spring Ave. CVS, Inc.
6349. Minnesota CVS Pharmacy, L.L.C.
6350. Minor Health Enterprise Co, Ltd.
6351. Mint Hill CVS, Inc.
6352. Minute Clinic Diagnostic of North Carolina, P.C.
6353. MinuteClinic Diagnostic Medical Group of California, Inc.
6354. MinuteClinic Diagnostic Medical Group of Orange County, Inc.
6355. MinuteClinic Diagnostic Medical Group of San Diego, Inc.
6356. MinuteClinic Diagnostic of Alabama, L.L.C.
6357. MinuteClinic Diagnostic of Arizona, LLC
6358. MinuteClinic Diagnostic of Arkansas, LLC
6359. MinuteClinic Diagnostic of Colorado LLC
6360. MinuteClinic Diagnostic of Connecticut, LLC
6361. MinuteClinic Diagnostic of Florida, LLC
6362. MinuteClinic Diagnostic of Georgia, LLC
6363. MinuteClinic Diagnostic of Hawaii, L.L.C.
6364. MinuteClinic Diagnostic of Illinois, LLC
6365. MinuteClinic Diagnostic of Kansas, P.A.
6366. MinuteClinic Diagnostic of Kentucky, L.L.C.
6367. MinuteClinic Diagnostic of Louisiana, L.L.C.
6368. MinuteClinic Diagnostic of Maine, L.L.C.
6369. MinuteClinic Diagnostic of Maryland, LLC
6370. MinuteClinic Diagnostic of Massachusetts, LLC
6371. MinuteClinic Diagnostic of Michigan, P.C.
6372. MinuteClinic Diagnostic of Minnesota, P.A.
6373. MinuteClinic Diagnostic of Nebraska, L.L.C.
6374. MinuteClinic Diagnostic of New Hampshire, L.L.C.
6375. MinuteClinic Diagnostic of New Jersey, LLC
6376. MinuteClinic Diagnostic of New Mexico, L.L.C.
6377. MinuteClinic Diagnostic of Ohio, LLC
6378. MinuteClinic Diagnostic of Oklahoma, LLC
6379. MinuteClinic Diagnostic of Oregon, LLC
6380. MinuteClinic Diagnostic of Pennsylvania, LLC
6381. MinuteClinic Diagnostic of Rhode Island, LLC
6382. MinuteClinic Diagnostic of South Carolina, L.L.C.
6383. MinuteClinic Diagnostic of Tennessee, P.C.
6384. MinuteClinic Diagnostic of Texas, LLC
6385. MinuteClinic Diagnostic of Utah, L.L.C.
6386. MinuteClinic Diagnostic of Virginia, LLC
6387. MinuteClinic Diagnostic of Washington, LLC
6388. MinuteClinic Diagnostic of Washington, PLLC
6389. MinuteClinic Diagnostic of Wisconsin, L.L.C.
6390. MinuteClinic Diagnostic, P.A.

6391. MinuteClinic Diagnostics of Indiana, LLC
6392. MinuteClinic Online Diagnostic Services, LLC
6393. MinuteClinic Online Virtual Care California, P.C.
6394. MinuteClinic Physician Practice of Texas
6395. MinuteClinic Telehealth Services of Texas Association
6396. MinuteClinic Telehealth Services, LLC
6397. MinuteClinic Video Virtual Care California, P.C.
6398. MinuteClinic Video Virtual Care North, LLC
6399. MinuteClinic Video Virtual Care of Kansas, LLC
6400. MinuteClinic Video Virtual Care of NC, PC
6401. MinuteClinic Video Virtual Care of Nevada, PLLC
6402. MinuteClinic Video Virtual Care of Wisconsin, S.C.
6403. MinuteClinic Video Virtual Care, P.C.
6404. MinuteClinic Video Virtual Care, PLLC
6405. MinuteClinic, L.L.C.
6406. MinuteClinic, LLC
6407. Miramar CVS, Inc.
6408. Mission Hills CVS, Inc.
6409. Mission Tremont CVS, Inc.
6410. Mission Valley CVS, Inc.
6411. Mission Viejo CVS, Inc.
6412. Mississippi CVS Pharmacy, L.L.C.
6413. Missouri Care, Incorporated
6414. Missouri City CVS, L.P.
6415. Missouri CVS Pharmacy, L.L.C.
6416. MLK Tampa CVS, L.L.C.
6417. Mobile AL CVS, Inc.
6418. Mogadore CVS, Inc.
6419. Mohawk Avenue CVS Store, Inc.
6420. Mohegan Lake CVS, L.L.C.
6421. Mokena CVS, L.L.C.
6422. Monroe CVS, Inc.
6423. Monroe NJ CVS, L.L.C.
6424. Monroe NY CVS, L.L.C.
6425. Monroe Prospect CVS, Inc.
6426. Montana CVS Pharmacy, L.L.C.
6427. Montclair CVS, Inc.
6428. Montebello CVS, Inc.
6429. Montevallo AL CVS, Inc.
6430. Montgomery AL CVS, Inc.
6431. Montgomery Sq. CVS, Inc.
6432. Montrose Chicago CVS, L.L.C.
6433. Montrose Houston CVS, L.P.
6434. Montvale Center CVS, Inc.
6435. Montvale Woburn CVS, Inc.
6436. Moorestown Mall CVS, Inc.
6437. Moorestown NJ Bob's, Inc.
6438. Moorestown West Main CVS, Inc.
6439. Moorpark CVS, Inc.
6440. Morewood Drive CVS, Inc.
6441. Morris Daytona CVS, L.L.C.
6442. Morrisville CVS, Inc.
6443. Morrow CVS, Inc.
6444. Morton Fry CVS, L.P.
6445. Mounds View MN CVS, L.L.C.
6446. Mount Carmel Plaza CVS, Inc.
6447. Mount Dora CVS, L.L.C.
6448. Mountain Avenue CVS, Inc.
6449. Mountain Brook CVS, Inc.
6450. Mountain Grove Investment Group LLC
6451. Mountain Medical Affiliates, Inc.
6452. Mountain Middlesex CVS, Inc.
6453. Movietown Plaza CVS, Inc.
6454. MP Receivables Company
6455. MRC Henderson Devco, Inc.
6456. MRC Manchester Devco, Inc.
6457. MRC Staten Island Devco, Inc.
6458. MRC Westbury Devco, Inc.
6459. MRC Woodlands Devco, Inc.
6460. Mt. Holly CVS, Inc.
6461. Mt. Joy CVS, Inc.

6462. Mt. Morris CVS, Inc.
6463. Mt. Pleasant CVS, Inc.
6464. Mt. Prospect CVS, L.L.C.
6465. Mundelein CVS, L.L.C.
6466. Murray CVS, Inc.
6467. Myrtle Beach CVS, Inc.
6468. N. Bayshore CVS, L.L.C.
6469. N. Sepulveda CVS, L.L.C.
6470. Nahatan Street CVS, Inc.
6471. Nanes Houston CVS, L.P.
6472. Nanuet Retailer, Inc.
6473. Naperville CVS, L.L.C.
6474. Naples CVS, L.L.C.
6475. Naples US 41 CVS, L.L.C.
6476. Nashua CVS, Inc.
6477. Nashua Hollis CVS, Inc.
6478. Nashville CVS, L.L.C.
6479. Natick Mall CVS, Inc.
6480. Natick Retailer, Inc.
6481. Natick Routes 9 and 27 CVS, Inc.
6482. National Motor Club Life & Accident Insurance Company
6483. Naugatuck Bridge St. CVS, Inc.
6484. Naugatuck CVS, Inc.
6485. Navarro Discount Pharmacies No. 1, Inc. (for assets / pharmacies acquired by CVS)
6486. Navarro Discount Pharmacies No. 1, LLC (for assets / pharmacies acquired by CVS)
6487. Navarro Discount Pharmacies No. 10, Inc. (for assets / pharmacies acquired by CVS)
6488. Navarro Discount Pharmacies No. 10, LLC (for assets / pharmacies acquired by CVS)
6489. Navarro Discount Pharmacies No. 11, Inc. (for assets / pharmacies acquired by CVS)
6490. Navarro Discount Pharmacies No. 11, LLC (for assets / pharmacies acquired by CVS)
6491. Navarro Discount Pharmacies No. 12, Inc. (for assets / pharmacies acquired by CVS)
6492. Navarro Discount Pharmacies No. 12, LLC (for assets / pharmacies acquired by CVS)
6493. Navarro Discount Pharmacies No. 13, Inc. (for assets / pharmacies acquired by CVS)
6494. Navarro Discount Pharmacies No. 13, LLC (for assets / pharmacies acquired by CVS)
6495. Navarro Discount Pharmacies No. 14, Inc. (for assets / pharmacies acquired by CVS)
6496. Navarro Discount Pharmacies No. 14, LLC (for assets / pharmacies acquired by CVS)
6497. Navarro Discount Pharmacies No. 15, Inc. (for assets / pharmacies acquired by CVS)
6498. Navarro Discount Pharmacies No. 15, LLC (for assets / pharmacies acquired by CVS)
6499. Navarro Discount Pharmacies No. 16, Inc. (for assets / pharmacies acquired by CVS)
6500. Navarro Discount Pharmacies No. 16, LLC (for assets / pharmacies acquired by CVS)
6501. Navarro Discount Pharmacies No. 17, Inc. (for assets / pharmacies acquired by CVS)
6502. Navarro Discount Pharmacies No. 17, LLC (for assets / pharmacies acquired by CVS)
6503. Navarro Discount Pharmacies No. 18, Inc. (for assets / pharmacies acquired by CVS)
6504. Navarro Discount Pharmacies No. 18, LLC (for assets / pharmacies acquired by CVS)

6505. Navarro Discount Pharmacies No. 19, Inc. (for assets / pharmacies acquired by CVS)
6506. Navarro Discount Pharmacies No. 19, LLC (for assets / pharmacies acquired by CVS)
6507. Navarro Discount Pharmacies No. 2, Inc. (for assets / pharmacies acquired by CVS)
6508. Navarro Discount Pharmacies No. 2, LLC (for assets / pharmacies acquired by CVS)
6509. Navarro Discount Pharmacies No. 20, Inc. (for assets / pharmacies acquired by CVS)
6510. Navarro Discount Pharmacies No. 20, LLC (for assets / pharmacies acquired by CVS)
6511. Navarro Discount Pharmacies No. 21, Inc. (for assets / pharmacies acquired by CVS)
6512. Navarro Discount Pharmacies No. 21, LLC (for assets / pharmacies acquired by CVS)
6513. Navarro Discount Pharmacies No. 22, Inc. (for assets / pharmacies acquired by CVS)
6514. Navarro Discount Pharmacies No. 22, LLC (for assets / pharmacies acquired by CVS)
6515. Navarro Discount Pharmacies No. 23, Inc. (for assets / pharmacies acquired by CVS)
6516. Navarro Discount Pharmacies No. 23, LLC (for assets / pharmacies acquired by CVS)
6517. Navarro Discount Pharmacies No. 24, Inc. (for assets / pharmacies acquired by CVS)
6518. Navarro Discount Pharmacies No. 24, LLC (for assets / pharmacies acquired by CVS)
6519. Navarro Discount Pharmacies No. 25, Inc. (for assets / pharmacies acquired by CVS)
6520. Navarro Discount Pharmacies No. 25, LLC (for assets / pharmacies acquired by CVS)
6521. Navarro Discount Pharmacies No. 26, Inc. (for assets / pharmacies acquired by CVS)
6522. Navarro Discount Pharmacies No. 26, LLC (for assets / pharmacies acquired by CVS)
6523. Navarro Discount Pharmacies No. 27, Inc. (for assets / pharmacies acquired by CVS)
6524. Navarro Discount Pharmacies No. 27, LLC (for assets / pharmacies acquired by CVS)
6525. Navarro Discount Pharmacies No. 28, Inc. (for assets / pharmacies acquired by CVS)
6526. Navarro Discount Pharmacies No. 28, LLC (for assets / pharmacies acquired by CVS)
6527. Navarro Discount Pharmacies No. 29, Inc. (for assets / pharmacies acquired by CVS)
6528. Navarro Discount Pharmacies No. 29, LLC (for assets / pharmacies acquired by CVS)
6529. Navarro Discount Pharmacies No. 3, Inc. (for assets / pharmacies acquired by CVS)
6530. Navarro Discount Pharmacies No. 3, LLC (for assets / pharmacies acquired by CVS)
6531. Navarro Discount Pharmacies No. 30, Inc. (for assets / pharmacies acquired by CVS)
6532. Navarro Discount Pharmacies No. 30, LLC (for assets / pharmacies acquired by CVS)

6533. Navarro Discount Pharmacies No. 31, Inc. (for assets / pharmacies acquired by CVS)
6534. Navarro Discount Pharmacies No. 31, LLC (for assets / pharmacies acquired by CVS)
6535. Navarro Discount Pharmacies No. 32, Inc. (for assets / pharmacies acquired by CVS)
6536. Navarro Discount Pharmacies No. 32, LLC (for assets / pharmacies acquired by CVS)
6537. Navarro Discount Pharmacies No. 33, Inc. (for assets / pharmacies acquired by CVS)
6538. Navarro Discount Pharmacies No. 33, LLC (for assets / pharmacies acquired by CVS)
6539. Navarro Discount Pharmacies No. 34, Inc. (for assets / pharmacies acquired by CVS)
6540. Navarro Discount Pharmacies No. 34, LLC (for assets / pharmacies acquired by CVS)
6541. Navarro Discount Pharmacies No. 35, Inc. (for assets / pharmacies acquired by CVS)
6542. Navarro Discount Pharmacies No. 35, LLC (for assets / pharmacies acquired by CVS)
6543. Navarro Discount Pharmacies No. 36, Inc. (for assets / pharmacies acquired by CVS)
6544. Navarro Discount Pharmacies No. 36, LLC (for assets / pharmacies acquired by CVS)
6545. Navarro Discount Pharmacies No. 37, Inc. (for assets / pharmacies acquired by CVS)
6546. Navarro Discount Pharmacies No. 37, LLC (for assets / pharmacies acquired by CVS)
6547. Navarro Discount Pharmacies No. 38, Inc. (for assets / pharmacies acquired by CVS)
6548. Navarro Discount Pharmacies No. 38, LLC (for assets / pharmacies acquired by CVS)
6549. Navarro Discount Pharmacies No. 4, Inc. (for assets / pharmacies acquired by CVS)
6550. Navarro Discount Pharmacies No. 4, LLC (for assets / pharmacies acquired by CVS)
6551. Navarro Discount Pharmacies No. 5, Inc. (for assets / pharmacies acquired by CVS)
6552. Navarro Discount Pharmacies No. 5, LLC (for assets / pharmacies acquired by CVS)
6553. Navarro Discount Pharmacies No. 6, Inc. (for assets / pharmacies acquired by CVS)
6554. Navarro Discount Pharmacies No. 6, LLC (for assets / pharmacies acquired by CVS)
6555. Navarro Discount Pharmacies No. 7, Inc. (for assets / pharmacies acquired by CVS)
6556. Navarro Discount Pharmacies No. 7, LLC (for assets / pharmacies acquired by CVS)
6557. Navarro Discount Pharmacies No. 8, Inc. (for assets / pharmacies acquired by CVS)
6558. Navarro Discount Pharmacies No. 8, LLC (for assets / pharmacies acquired by CVS)
6559. Navarro Discount Pharmacies No. 9, Inc. (for assets / pharmacies acquired by CVS)
6560. Navarro Discount Pharmacies No. 9, LLC (for assets / pharmacies acquired by CVS)

6561. Navarro Discount Pharmacies, Inc. (for assets / pharmacies acquired by CVS)
6562. Navarro Discount Pharmacies, LLC (for assets / pharmacies acquired by CVS)
6563. NCS Healthcare of Illinois, LLC
6564. NCS Healthcare of Indiana LLC
6565. NCS Healthcare of Indiana, Inc.
6566. NCS Healthcare of Iowa, LLC
6567. NCS Healthcare of Kansas, LLC
6568. NCS Healthcare of Kentucky, Inc.
6569. NCS Healthcare of Kentucky, LLC
6570. NCS Healthcare of Montana, Inc.
6571. NCS Healthcare of Montana, LLC
6572. NCS Healthcare of New Hampshire, Inc.
6573. NCS Healthcare of New Mexico, Inc.
6574. NCS Healthcare of New Mexico, LLC
6575. NCS Healthcare of Ohio, LLC
6576. NCS Healthcare of South Carolina, Inc.
6577. NCS Healthcare of South Carolina, LLC
6578. NCS Healthcare of Tennessee, Inc.
6579. NCS Healthcare of Tennessee, LLC
6580. NCS Healthcare of Washington, Inc.
6581. NCS Healthcare of Wisconsin, LLC
6582. NCS Healthcare, LLC
6583. NCS Services, Inc.
6584. NCSC Acquisition Sub, LLC
6585. NCSH Acquisition Sub, LLC
6586. Nebraska CVS Pharmacy, L.L.C.
6587. NEC Long Beach CVS, L.L.C.
6588. NEC Main CVS, Inc.
6589. NEC Montgomery CVS, L.L.C.
6590. NEC Washington CVS, L.L.C.
6591. Neck Burlington CVS, Inc.
6592. Needham Center CVS, Inc.
6593. Needham CVS, Inc.
6594. Needham St.-Newton CVS, Inc.
6595. NeighborCare Holdings, Inc.
6596. NeighborCare of Indiana, LLC
6597. NeighborCare of New Hampshire, L.L.C.
6598. NeighborCare of Virginia, LLC
6599. NeighborCare Pharmacies, LLC
6600. NeighborCare Pharmacy of Virginia, LLC
6601. NeighborCare Pharmacy Services, Inc.
6602. NeighborCare Pharmacy Services, LLC
6603. NeighborCare Repackaging, Inc.
6604. NeighborCare Services Corporation
6605. NeighborCare, Inc.
6606. NeighborCare-TCI, LLC
6607. Nelson Lake Charles CVS, Inc.
6608. Neshaminy PA CVS, Inc.
6609. Nevada CVS Pharmacy, L.L.C.
6610. Nevada Street CVS, Inc.
6611. New Albany CVS, Inc.
6612. New Britain CVS, Inc.
6613. New Britain Township CVS, Inc.
6614. New Brunswick CVS, Inc.
6615. New Canaan CVS, Inc.
6616. New City CVS, L.L.C.
6617. New Garden CVS, Inc.
6618. New Haven Crown CVS, Inc.
6619. New Haven Melbourne CVS, L.L.C.
6620. New Hope MN CVS, L.L.C.
6621. New Hope Street CVS, Inc.
6622. New Jersey Avenue CVS, L.L.C.
6623. New Jersey CVS Pharmacy, L.L.C.
6624. New Lenox CVS, L.L.C.
6625. New London Ocean Avenue CVS, Inc.
6626. New London Retailer, Inc.
6627. New London Turnpike CVS, Inc.
6628. New Orleans LA CVS, Inc.
6629. New Port Richey CVS, L.L.C.
6630. New Providence CVS, Inc.

6631. New Windsor CVS, Inc.
6632. New York CVS Pharmacy, L.L.C.
6633. New York First Avenue CVS, Inc.
6634. New York Life and Health Insurance Company
6635. New York Life/Sanus Health Plan, Inc.
6636. NEW YORNYHT ACQUISITION, INC.
6637. Newark Delaware CVS, Inc.
6638. Newark East Main CVS, Inc.
6639. Newark Ohio CVS, Inc.
6640. Newark ProCare Pharmacy, Inc.
6641. Newbury Street CVS, Inc.
6642. Newburyport CVS, Inc.
6643. Newington Avenue CVS, Inc.
6644. Newington Cedar CVS, Inc.
6645. Newington CVS, Inc.
6646. Newman Ave. CVS, Inc.
6647. Newnan CVS, Inc.
6648. Newnan Fayetteville CVS, Inc.
6649. Newport CVS, Inc.
6650. Newton Center St. CVS, Inc.
6651. Newton Watertown CVS, Inc.
6652. Newtonville CVS, Inc.
6653. Newtown CVS, Inc.
6654. NH Acquisition Sub, LLC
6655. Niagara Re, Inc.
6656. Nicollet Richfield CVS, L.L.C.
6657. Nihan & Martin LLC
6658. Niles Clinton Stores, Inc.
6659. Niles CVS, Inc.
6660. Niles CVS, L.L.C.
6661. Niles IL CVS, L.L.C.
6662. Niskayuna CVS Store, Inc.
6663. NIV Acquisition, LLC
6664. No. Dartmouth State Rd. CVS, Inc.
6665. Nockamixon CVS, Inc.
6666. Norfolk CVS, Inc.
6667. Norristown CVS, Inc.
6668. North Adams CVS, Inc.
6669. North American Health Plan, Inc.
6670. North Andover CVS, Inc.
6671. North Attleboro CVS, Inc.
6672. North Aurora CVS, L.L.C.
6673. North Boston Pharmacy, Inc.
6674. North Brunswick CVS, L.L.C.
6675. North Carolina Acquisition Corp.
6676. North Carolina CVS Pharmacy, L.L.C.
6677. North Charleston SC CVS, Inc.
6678. North Fort Myers CVS, L.L.C.
6679. North Grace Lombard CVS, L.L.C.
6680. North Haven CVS, Inc.
6681. North Kent CVS, Inc.
6682. North Las Vegas CVS, L.L.C.
6683. North Lindenhurst CVS, Inc.
6684. North Miami ProCare Pharmacy, Inc.
6685. North Naples CVS, L.L.C.
6686. North New Rochelle CVS, L.L.C.
6687. North Olmstead OH CVS, Inc.
6688. North Reading CVS, Inc.
6689. North Shore Pharmacy Services LLC
6690. North Syracuse CVS Store, Inc.
6691. North Towne Sq. CVS, Inc.
6692. Northampton (Mass.) CVS, Inc.
6693. Northampton Main Street CVS, Inc.
6694. Northborough CVS, Inc.
6695. Northbrook IL CVS, L.L.C.
6696. Northeast Philadelphia CVS, Inc.
6697. Northern Jackson Heights CVS, L.L.C.
6698. Northlake Palm Beach CVS, L.L.C.
6699. Northland CVS, Inc.
6700. Northridge Nordhoff CVS, Inc.
6701. Northville Sheldon CVS, L.L.C.
6702. Northville Township CVS, Inc.
6703. Northwest Highway CVS, L.L.C.
6704. Northwest K Street CVS, Inc.
6705. Northwest M Street CVS, L.L.C.
6706. Norton CVS, Inc.
6707. Norton Mansfield St. CVS, Inc.
6708. Norton Primary (Americas) Limited
6709. Norwalk Broad Street CVS, Inc.

6710. Norwalk Square CVS, Inc.
6711. Norwich Main Street CVS, Inc.
6712. Norwood Avenue CVS, L.L.C.
6713. Norwood CVS, Inc.
6714. Nostrand Brooklyn CVS, L.L.C.
6715. Nostrand CVS, L.L.C.
6716. Notre Dame CVS, Inc.
6717. Nottingham PA CVS, Inc.
6718. Novo Innovations, LLC
6719. NovoLogix, Inc.
6720. NovoLogix, LLC
6721. NS Acquisition Sub, LLC
6722. NSPS Acquisition Sub, LLC
6723. Nutmeg CVS, L.L.C.
6724. Nutmeg Life Insurance Company
6725. NWC 63rd Chicago CVS, L.L.C.
6726. NWC 80th Minneapolis CVS, L.L.C.
6727. NWC CVS, Inc
6728. NWC Frank Lloyd Wright CVS, L.L.C.
6729. NWC Northdale CVS, L.L.C.
6730. NWC Rte. 59 CVS, L.L.C.
6731. NY Lexington CVS, L.L.C.
6732. Nyack CVS, L.L.C.
6733. NYLCare Dental Plans of the Southwest, Inc.
6734. NYLCare Health Plans Northwest, Inc.
6735. NYLCare Health Plans of Connecticut, Inc.
6736. NYLCare Health Plans of Maine, Inc.
6737. NYLCare Health Plans of New Jersey, Inc.
6738. NYLCare Health Plans of New York, Inc.
6739. NYLCare Health Plans of Pennsylvania, Inc.
6740. NYLCare Health Plans of the Mid-Atlantic, Inc.
6741. NYLCare Health Plans of the Midwest, Inc.
6742. NYLCare Health Plans, Inc.
6743. NYLCare Health Plans, LLC
6744. NYLCare of New England, Inc.
6745. NYLCare of Texas, Inc.
6746. NYLCare Plus, Inc.
6747. NYLCare Preferred Services, Inc.
6748. Oak Lane CVS, Inc.
6749. Oak Park CVS, L.L.C.
6750. Oak Ridge CVS, L.L.C.
6751. Oak Ridge NC CVS, Inc.
6752. Oak Ridge Orlando CVS, L.L.C.
6753. Oaklawn Ave., Cranston CVS, Inc.
6754. Oaklyn CVS, Inc.
6755. Oakton Niles CVS, L.L.C.
6756. Oakwood CVS, Inc.
6757. Ocala CVS, L.L.C.
6758. Ocean Acquisition Sub, L.L.C.
6759. Ocean City MD CVS, L.L.C.
6760. Ocean County CVS, Inc.
6761. Ocean View Plaza CVS, Inc.
6762. Ocoee FL CVS, L.L.C.
6763. OCR Services Corporation
6764. OCR Services, LLC
6765. OCR-RA Acquisition, LLC
6766. Odd Lot Parent Corporation
6767. Odd Lot Trading, Inc.
6768. Oger Park CVS, L.L.C.
6769. Ohio CVS Pharmacy, L.L.C.
6770. Ohio CVS Stores, L.L.C.
6771. Ohio Primary Care Associates, P.C.
6772. Oklahoma CVS Pharmacy, L.L.C.
6773. Olathe 119th CVS, Inc.
6774. Olathe Ridgeview CVS, Inc.
6775. Old Buncombe Road CVS, Inc.
6776. Old Country CVS, Inc.
6777. Old Cutler Miami CVS, L.L.C.
6778. Old Greenwich CVS, Inc.
6779. Old Hickory CVS, Inc.
6780. Old Maple CVS, Inc.
6781. Old National CVS, Inc.
6782. Old Richmond Sugar Land CVS, L.P.
6783. Old Saybrook CVS, Inc.

6784. Old Tappan CVS, Inc.
6785. Old Winter Orlando CVS, L.L.C.
6786. Olean Center CVS Store, Inc.
6787. Olean Clinton Stores, Inc.
6788. Olive Glendale CVS, L.L.C.
6789. Olympia Fields CVS, L.L.C.
6790. Olympia Way CVS, L.L.C.
6791. Omaha Financial Life Insurance Company
6792. Omnicare Air Transport Services, Inc.
6793. Omnicare Canadian Holdings, Inc.
6794. Omnicare Distribution Center LLC
6795. Omnicare ESC LLC
6796. Omnicare Foundation
6797. Omnicare Headquarters LLC
6798. OmniCare Health Plan, Inc.
6799. Omnicare Holding Company
6800. Omnicare Indiana Partnership Holding Company LLC
6801. Omnicare Management Company
6802. Omnicare of Nevada, LLC
6803. Omnicare of New York, LLC
6804. Omnicare Pharmacies of Pennsylvania East LLC
6805. Omnicare Pharmacies of Pennsylvania West LLC
6806. Omnicare Pharmacies of The Great Plains Holding Company
6807. Omnicare Pharmacies of the Great Plains Holding Company, LLC
6808. Omnicare Pharmacy and Supply Services LLC
6809. Omnicare Pharmacy of Florida, LLC
6810. Omnicare Pharmacy of Florida, LP
6811. Omnicare Pharmacy of Maine LLC
6812. Omnicare Pharmacy of Nebraska, LLC
6813. Omnicare Pharmacy of North Carolina, LLC
6814. Omnicare Pharmacy of Pueblo, LLC
6815. Omnicare Pharmacy of Tennessee, LLC
6816. Omnicare Pharmacy of Texas 1, LP
6817. Omnicare Pharmacy of Texas 2, LP
6818. Omnicare Pharmacy of the Midwest, LLC
6819. Omnicare Property Management, LLC
6820. Omnicare Purchasing Company General Partner, Inc.
6821. Omnicare Purchasing Company Limited Partner, Inc.
6822. Omnicare Purchasing Company LP
6823. Omnicare Resources, LLC
6824. Omnicare SCG, INC.
6825. Omnicare Senior Health Outcomes, LLC
6826. Omnicare, Inc.
6827. Omnicare, LLC
6828. One Liberty Plaza Holdings, Inc.
6829. Oneonta Clinton Stores, Inc.
6830. Onondaga County CVS, Inc.
6831. Ontario CVS, Inc.
6832. OPGP Acquisition Sub, LLC
6833. OPM Acquisition Sub, LLC
6834. OPSS Acquisition Sub, LLC
6835. Orange Blossom CVS, Inc.
6836. Orange Central CVS, Inc.
6837. Orange City CVS, L.L.C.
6838. Orange Coast CVS, Inc.
6839. Orange CVS, Inc.
6840. Orange Winter Park CVS, L.L.C.
6841. Orange-Derby CVS, Inc.
6842. Orangethorpe CVS, L.L.C.
6843. Oregon Avenue CVS, Inc.
6844. Oregon CVS Pharmacy, L.L.C.
6845. Orland Hills CVS, L.L.C.
6846. Orland Park CVS, L.L.C.
6847. Orleans CVS, Inc.
6848. Orleans West Rd. CVS, Inc.
6849. Ormond Beach CVS, L.L.C.
6850. Owings Mills CVS, Inc.
6851. Oxford Casselberry CVS, L.L.C.

6852. Oxford CVS, Inc.
6853. Oxford Valley CVS, Inc.
6854. Oxford Valley, PA Bob's, Inc.
6855. Oyster Bay Kay-Bee Toy, Inc.
6856. P Street CVS, Inc.
6857. PA CVS, Inc.
6858. Pacific Coast Lomita CVS, L.L.C.
6859. Pacific Long Beach CVS, L.P.
6860. PacifiCare of Utah, Inc.
6861. Palm Ave CVS, L.L.C.
6862. Palm Beach CVS, Inc.
6863. Palm Beach Gardens CVS, L.L.C.
6864. Palm Beach Military CVS, L.L.C.
6865. Palm Harbor CVS, Inc.
6866. Palmdale Rancho CVS, L.L.C.
6867. Palmer Thorndike CVS, Inc.
6868. Palos Heights CVS, L.L.C.
6869. Pamplona Saúde e Beleza LTDA
6870. Panorama City CVS, L.P.
6871. Panorama CVS Store, Inc.
6872. Panorama CVS, Inc.
6873. Paoli, PA., CVS, Inc.
6874. Paramus Park CVS, Inc.
6875. Parekh MinuteClinic of Nevada, P.C.
6876. Paris CVS, Inc.
6877. Park Avenue South CVS, Inc.
6878. Park Boulevard CVS, Inc.
6879. Park Charlotte CVS, Inc.
6880. Park City CVS, Inc.
6881. Park City Retailer, Inc.
6882. Park Los Rios Plano CVS, L.L.C.
6883. Park Place CVS, Inc.
6884. Park Plaza CVS, Inc.
6885. Park Street CVS, Inc.
6886. Parker Plano CVS, L.P.
6887. Parker Street CVS, Inc.
6888. Parkersburg CVS, Inc.
6889. Parkhill CVS, Inc.
6890. Parkwin Bald CVS, L.L.C.
6891. Parkwood Circle CVS, Inc.
6892. Parmer Dessau CVS, L.L.C.
6893. Parsonage CVS, Inc.
6894. Part D Holding Company, L.L.C.
6895. Part D Management Services, LLC
6896. PARTNERS Health Plan of California
6897. PARTNERS Health Plan of Florida, Inc.
6898. PARTNERS Health Plan of Louisiana, Inc.
6899. PARTNERS Health Plan of Northern Ohio, Inc.
6900. PARTNERS Health Plan of Southern California
6901. PARTNERS Health Plan of Southern New England, Inc.
6902. PARTNERS Joint Acquisition Company, Inc.
6903. Pasadena CVS, Inc.
6904. Pasadena CVS, L.P.
6905. Pasadena Foothill CVS, L.L.C.
6906. Passyunk Ave. (Phila.) CVS, Inc.
6907. Pataskala CVS, L.L.C.
6908. Paterson CVS, Inc.
6909. Patriot Square CVS, Inc.
6910. Paulsboro CVS, Inc.
6911. Pavilion Boulevard CVS, Inc.
6912. Pawtucket CVS, Inc.
6913. Pawtucket Plaza CVS, Inc.
6914. Pawtucket Retailer, Inc.
6915. Paxton Square CVS, Inc.
6916. PayFlex Holdings, Inc.
6917. PayFlex Systems USA, Inc.
6918. PCS Mail Services of Birmingham, Inc.
6919. PE Holdings, LLC
6920. Peabody Lowell CVS, Inc.
6921. Peabody Lynnfield CVS, Inc.
6922. Peachtree CVS, Inc.
6923. Pearland CVS, L.P.
6924. Pecos Gilbert CVS, L.L.C.
6925. Pelham Manor CVS, Inc.
6926. Pembroke Center St. CVS, Inc.
6927. Pembroke Pines CVS, Inc.
6928. Penn - Daw CVS, Inc.

6929. Penn - Daw Peoples, Inc.
6930. Penn Group Health Plan, Inc.
6931. Penn-Can CVS Store, Inc.
6932. Pennsauken CVS, Inc.
6933. Pennsburg CVS, Inc.
6934. Pennsylvania Ave. CVS, Inc.
6935. Pennsylvania Ave. Peoples, Inc.
6936. Pennsylvania Avenue CVS, Inc.
6937. Pennsylvania Avenue ProCare, Inc.
6938. Pennsylvania Binghamton CVS, L.L.C.
6939. Pennsylvania CVS Pharmacy, L.L.C.
6940. Pennsylvania Life Insurance Company
6941. Pennsylvania LIfe, Health & Accident Insurance Company
6942. Pennsylvania-HealthCare USA, Inc.
6943. Peoples Drug Stores
6944. Peoples Drug Stores, Inc.
6945. Peoples Drug Stores, Incorporated
6946. Peoples of East Moline, Inc.
6947. Peoples Prescription Center, Inc.,
6948. Peoples Service Drug
6949. Peoples Service Drug Stores
6950. Peoples Service Drug Stores, Inc.
6951. Peoria AZ CVS, L.L.C.
6952. Peppertree Plaza CVS, Inc.
6953. Pequannock CVS, Inc.
6954. Performax, Inc.
6955. Perry Hall CVS, L.L.C.
6956. Perry Highway CVS, Inc.
6957. Pershing Drive CVS, Inc.
6958. PersonalCare Insurance of Illinois, Inc.
6959. Pfafftown CVS, Inc.
6960. Pharm Plus Acquisition, Inc.
6961. PharmaCare Captive RE, Ltd.
6962. PharmaCare Direct, L.L.C.
6963. PharmaCare Government Services, Inc.
6964. PharmaCare Healthcare Distributors, L.L.C.
6965. PharmaCare Holding Corporation
6966. Pharmacare Management Services, L.L.C.
6967. PharmaCare Pharmacy LA, L.L.C.
6968. PharmaCare Pharmacy, Inc.
6969. PharmaCare Pharmacy, L.L.C.
6970. PharmaCare Puerto Rico Specialty Pharmacy Holding, L.L.C.
6971. PharmaCare Puerto Rico Specialty Pharmacy, L.L.C.
6972. PharmaCare Specialty Healthcare Distributors, L.L.C.
6973. PharmaCare Support Services, L.L.C.
6974. PharmaCon Corp.
6975. Pharmacy Advisory Company
6976. Pharmacy Associates of Glens Falls, Inc.
6977. Pharmacy Associates of Glens Falls, LLC
6978. Pharmacy Consultants, LLC
6979. Pharmacy Holding #1, LLC
6980. Pharmacy Holding #2, LLC
6981. Pharmasource Healthcare, Inc.
6982. Pharm-Corp of Maine LLC
6983. Pharmed Holdings, Inc.
6984. Pharmed Holdings, LLC
6985. Pharmore Drugs, LLC
6986. Pharmore, Inc.
6987. Pharmore, LLC
6988. Pheasant Nashua CVS, Inc.
6989. PHG Aces Acquisition, LLC
6990. PHG Acquisition Corp.
6991. PHG Mystery Acquisition, LLC
6992. Phila Sun CVS, Inc.
6993. Philadelphia Broad CVS, Inc.
6994. Philadelphia Foxchase CVS, Inc.
6995. Philadelphia Frankford CVS, Inc.
6996. Philadelphia Gallery CVS, Inc.
6997. Philadelphia Harbison CVS, Inc.
6998. Philadelphia PA CVS, Inc.
6999. Philadelphia ProCare, Inc.
7000. Philadelphia Roosevelt CVS, Inc.

7001. Philadelphia South Street CVS, Inc.
7002. Philadelphia, PA Bob's, Inc.
7003. Phillips CVS, Inc.
7004. Phillipsburg CVS, Inc.
7005. Philly Broad Street CVS, Inc.
7006. Phoenix Data Center Hosting Services LLC
7007. Phoenix Data Solutions LLC
7008. Phoenix Glendale CVS, L.L.C.
7009. Phoenixville PA CVS, Inc.
7010. PHPSNE Parent Corporation
7011. Physician Choice Health Plan
7012. Physicians Health Plan of Delaware, LTD.
7013. Physicians Health Plan of Florida, Inc.
7014. Physicians Hospital Management Corporation
7015. Pico Rivera CVS, Inc.
7016. Pigeon Forge TN CVS, Inc.
7017. Pinal County AZ CVS, L.L.C.
7018. Pine Ocala CVS, L.L.C.
7019. Pinecrest CVS, Inc.
7020. Pinellas Park CVS, Inc.
7021. Pinnacle Peak Peoria CVS, L.L.C.
7022. Pio Nono Avenue CVS, Inc.
7023. Pioneer Parkway CVS, L.P.
7024. Piper Glen CVS, Inc.
7025. Pittsburgh Fifth Avenue CVS, Inc.
7026. Pittsfield CVS, Inc.
7027. Pittsfield Retailer, Inc.
7028. Pittston CVS, Inc.
7029. Placentia CVS, Inc.
7030. Plain CVS, Inc.
7031. Plainfield CVS, Inc.
7032. Plainfield Distribution Center, Inc.
7033. Plainfield IL CVS, L.L.C.
7034. Plainfield-Seventh St. CVS, Inc.
7035. Plainview TX CVS, L.L.C.
7036. Plainville East CVS, Inc.
7037. Plano CVS, L.P.
7038. Plantation CVS, L.L.C.
7039. Plantation Street PharmaCare Pharmacy, Inc.
7040. Plaza Boulevard CVS, Inc.
7041. Plaza Retailer, Inc.
7042. Pleasant Fall River CVS, Inc.
7043. Pleasant Ridge CVS, L.P.
7044. Pleasant Street CVS, Inc.
7045. Pleasantville CVS, L.L.C.
7046. Plumstead CVS, Inc.
7047. Plymouth CVS, Inc.
7048. Plymouth Meeting CVS, Inc.
7049. Plymouth MN CVS, L.L.C.
7050. Plymouth Route 44 CVS, Inc.
7051. PMRP Acquisition Company, LLC
7052. Poinciana FL CVS, L.L.C.
7053. Port Chester CVS, L.L.C.
7054. Port Huron Clinton Discount Stores, Inc.
7055. Port Huron CVS, Inc.
7056. Port Orange Realty Services, L.L.C.
7057. Port Richmond CVS, Inc.
7058. Port Washington CVS, Inc.
7059. Portage CVS, Inc.
7060. Porter Square CVS, Inc.
7061. Porters Pass CVS, Inc.
7062. Portsmouth CVS, Inc.
7063. Post Office Square CVS, Inc.
7064. Pottstown High Street CVS, Inc.
7065. Poughkeepsie CVS, L.L.C.
7066. Powell OH CVS, Inc.
7067. PP Acquisition Company, LLC
7068. PPOM, L.L.C.
7069. Prairieville LA CVS, Inc.
7070. Precision Benefit Services, Inc.
7071. President-Quincy CVS, Inc.
7072. Preston Beltline CVS, L.P.
7073. Preston Center CVS, L.P.
7074. Preston Plano CVS, L.P.
7075. Primary Healthcare Asia Limited
7076. Primary Holdings, Inc.
7077. Primary Investments, Inc
7078. Prime Net, Inc.

7079. Prince George's Health Services Foundation Plan, Inc.
7080. Princeton NJ CVS, L.L.C.
7081. Principal Health Care of Delaware, Inc.
7082. Principal Health Care of Georgia, Inc.
7083. Principal Health Care of Iowa, Inc.
7084. Principal Health Care of Kansas City, Inc
7085. Principal Health Care of Louisiana, Inc.
7086. Principal Health Care of Nebraska, Inc.
7087. Principal Health Care of Pennsylvania, Inc.
7088. PRN Pharmaceutical Services, LP
7089. ProCare 3159 General, Inc.
7090. ProCare 4268 Yankee, L.L.C.
7091. ProCare 8th Manhattan, L.L.C.
7092. ProCare 9th Avenue, L.L.C.
7093. ProCare Ave. Pharmacy, L.L.C.
7094. ProCare Boston Pharmacy, Inc.
7095. ProCare DC Pharmacy, Inc.
7096. ProCare Manhattan Pharmacy, L.L.C.
7097. ProCare Meridian Miami, L.L.C.
7098. ProCare N.Y. Pharmacy, Inc.
7099. ProCare Pharmacy 18th Street, Inc.
7100. ProCare Pharmacy A, L.L.C.
7101. ProCare Pharmacy Avenue 1st-483, L.L.C.
7102. ProCare Pharmacy Direct, L.L.C.
7103. ProCare Pharmacy Dryden, L.P.
7104. ProCare Pharmacy East Colonial, Inc.
7105. ProCare Pharmacy Fairfax, Inc.
7106. ProCare Pharmacy Garden Grove, Inc.
7107. ProCare Pharmacy Glendale Boulevard, Inc.
7108. ProCare Pharmacy Limited of Illinois, Inc.
7109. ProCare Pharmacy Miami 54, Inc.
7110. ProCare Pharmacy Monument Street, L.L.C.
7111. ProCare Pharmacy North Orange, Inc.
7112. ProCare Pharmacy of Berkeley, Inc.
7113. ProCare Pharmacy of Broad Street, Inc.
7114. ProCare Pharmacy of Brookline Avenue, Inc.
7115. ProCare Pharmacy of Casselberry, Inc.
7116. ProCare Pharmacy of Chicago, L.L.C.
7117. ProCare Pharmacy of East Morehead, Inc.
7118. ProCare Pharmacy of Glendale, Inc.
7119. ProCare Pharmacy of Kansas City, Inc.
7120. ProCare Pharmacy of Portland, L.L.C.
7121. ProCare Pharmacy of San Antonio, Inc.
7122. ProCare Pharmacy of San Diego, Inc.
7123. ProCare Pharmacy of San Francisco, Inc.
7124. ProCare Pharmacy of Tampa, Inc.
7125. ProCare Pharmacy of West Hollywood, Inc.
7126. ProCare Pharmacy Orange Orlando, Inc.
7127. ProCare Pharmacy Palo Alto, Inc.
7128. ProCare Pharmacy Phoenix, L.L.C.
7129. ProCare Pharmacy Rancho Lane, L.L.C.
7130. ProCare Pharmacy Santa Monica, Inc.
7131. ProCare Pharmacy Sherman Oaks, Inc.
7132. ProCare Pharmacy South Orange, Inc.

7133. ProCare Pharmacy Spruce Street, Inc.
7134. ProCare Pharmacy West Columbia, Inc.
7135. ProCare Pharmacy West Copeland, Inc.
7136. ProCare Pharmacy, L.L.C.
7137. Proctorville CVS, Inc.
7138. Prodigy Health Group Holdings, Inc.
7139. Prodigy Health Group, Inc.
7140. Professional Pharmacy Services, Inc.
7141. Professional Risk Management, Inc.
7142. Prospect CVS, Inc.
7143. Prospect Park CVS, Inc.
7144. Providence Charlotte CVS, Inc.
7145. Providence Place CVS, Inc.
7146. Providence Road CVS, Inc.
7147. Providence Street CVS, Inc.
7148. Providence Thayer Street CVS, Inc.
7149. Providence-Wayland CVS, Inc.
7150. Provider Networks of America, Inc.
7151. Prudential Center for Health Care Research Foundation, Inc.
7152. Prudential Dental Maintenance Organization, Inc.
7153. Prudential Health Care Plan of California, Inc.
7154. Prudential Health Care Plan of Connecticut, Inc.
7155. Prudential Health Care Plan of New York, Inc.
7156. Prudential Health Care Plan, Inc.
7157. Prudential Health Plan of Georgia, Inc.
7158. PSI Arkansas Acquisition, LLC
7159. PT Aetna Management Consulting
7160. PT Asuransi Aetna Asia
7161. PT. Aetna Global Benefits Indonesia
7162. PT. Goodhealth Indonesia
7163. Puente Hills CVS, Inc.
7164. Puerto Rico CVS Pharmacy, L.L.C.
7165. Punta Gorda CVS, L.L.C.
7166. Putnam Pike CVS, Inc.
7167. Quaker Bridge CVS, Inc.
7168. Quakertown CVS, Inc.
7169. Quality Choice Health Plan
7170. Queen Anne Plaza CVS, Inc.
7171. Queen Anne Road CVS, L.L.C.
7172. Queen City AZ CVS, L.L.C.
7173. Queen Creek CVS, L.L.C.
7174. Queens Forest Hills CVS, L.L.C.
7175. Queens Plaza CVS, Inc.
7176. Quention Road CVS, Inc.
7177. Quincy Adams CVS, Inc.
7178. Quincy CVS, Inc.
7179. Quincy Hancock CVS, Inc.
7180. Quincy Parcel Holding Corp.
7181. Quincy Shore Drive CVS, Inc.
7182. R Parks CVS, Inc.
7183. Race Street CVS, Inc.
7184. Race Track Tampa CVS, L.L.C.
7185. Raceway CVS, Inc.
7186. Raleigh CVS, Inc.
7187. Raleigh Millbrook CVS, Inc.
7188. Ralphs Circle CVS, Inc.
7189. Ralph's Corner CVS, Inc.
7190. Ramona Blvd CVS, L.L.C.
7191. Rancho Niguel CVS, Inc.
7192. Randallstown CVS, Inc.
7193. Randolph CVS, Inc.
7194. Randolph Hills CVS, Inc.
7195. Ravenna CVS, Inc.
7196. Ray McClintock CVS, L.L.C.
7197. Rayford Spring CVS, L.P.
7198. Raynham Broadway CVS, Inc.
7199. Raynham CVS, Inc.
7200. Raynham Plaza CVS, Inc.
7201. Rea & Derick, Inc.
7202. Reading CVS, Inc.
7203. Reading, Penna., CVS, Inc.
7204. Recker Mesa CVS, L.L.C.
7205. Red Oak Houston CVS, L.P.
7206. Red Oak Lane CVS, Inc.

7207. Red Oak Sourcing, LLC
7208. Redondo Beach CVS, Inc.
7209. Reed Street CVS, Inc.
7210. Reedy Creek CVS, Inc.
7211. Regency Park Port Richey CVS, L.L.C.
7212. Rehoboth Beach CVS, Inc.
7213. Reidville Drive CVS, Inc.
7214. Renaisance CVS, Inc.
7215. Reseda Northridge CVS, L.P.
7216. Resources for Living, LLC
7217. Reston Plaza America CVS, Inc.
7218. Retail Acquisitions Today, L.L.C.
7219. Retrac, Inc.
7220. Revco D.S., Inc.
7221. Revco Discount Drug Centers, Inc. (MI)
7222. Revco Discount Drug Centers, Inc. (OH)
7223. Revco Drug Stores, Inc.
7224. Revco Golf Charities Foundation
7225. Revco Home Health Care Centers, Inc.
7226. Revco Mail Service Pharmacy, Inc.
7227. Revir CVS, L.L.C.
7228. Reynoldsburg CVS, Inc.
7229. Rhode Island CVS Pharmacy, L.L.C.
7230. Rhode Island Home Therapeutics, Inc.
7231. Rice Mine Tuscaloosa CVS, Inc.
7232. Richards Investment Company
7233. Richardson CVS, L.P.
7234. Richboro Market CVS, Inc.
7235. Richland Hills CVS, L.P.
7236. Richmond CVS, Inc.
7237. Richmond Heights Acquisition Corp.
7238. Richmond Highway 6 CVS, L.P.
7239. Richmond Highway CVS, Inc.
7240. Richmond Houston CVS, L.P.
7241. Richmond Kirby CVS, L.P.
7242. Richmond Montrose CVS, L.P.
7243. Richmond Peoples, Inc.
7244. Richmond RI CVS, Inc.
7245. Richmond Sage CVS, L.P.
7246. Richmond Woodman CVS, Inc.
7247. Richton Park IL CVS, L.L.C.
7248. Ridgefield CT CVS, Inc.
7249. Ridgefield Grove CVS, Inc.
7250. Ridgeley CVS, Inc.
7251. Ridley Acres CVS, Inc.
7252. Ridley CVS, Inc.
7253. Ringgold GA CVS, Inc.
7254. Ringwood NJ CVS, L.L.C.
7255. Rising Sun CVS, Inc.
7256. Risinger Ft. Worth CVS, L.P.
7257. River Edge CVS, Inc.
7258. River Forest CVS, L.L.C.
7259. River Road CVS, Inc.
7260. River View Marketplace CVS, Inc.
7261. Riverdale IL CVS, L.L.C.
7262. Riverside Arlington CVS, INc.
7263. Riverside Danville CVS, Inc.
7264. Riverton NJ CVS, L.L.C.
7265. Riverview FL CVS, L.L.C.
7266. Riverwatch CVS, Inc.
7267. Robbinsdale MN CVS, L.L.C.
7268. Robbinsville CVS, Inc.
7269. Robert St. Paul CVS, L.L.C.
7270. Robious CVS, Inc.
7271. Rochelle Park CVS, L.L.C.
7272. Rochester Main St. CVS Store, Inc.
7273. Rochester N.H. CVS, Inc.
7274. Rockaway (N.J.) CVS, Inc.
7275. Rockingham CVS, L.L.C.
7276. Rockingham Park CVS, Inc.
7277. Rockland CVS, Inc.
7278. Rockledge FL CVS, L.L.C.
7279. Rockville CVS, Inc.
7280. Rockville MD CVS, L.L.C.
7281. Rockville Pike CVS, Inc.
7282. Rockville Pike Peoples, Inc.
7283. Rocky Hill Cromwell CVS, Inc.
7284. Rocky Hill CVS, Inc.
7285. Roeschen's Healthcare LLC

7286. Rolling Manassas CVS, Inc.
7287. Rolling Meadows CVS, L.L.C.
7288. Roosevelt CVS, L.L.C.
7289. Roosevelt Field CVS, Inc.
7290. Roosevelt Plaza CVS, Inc.
7291. Roper Mountain Road CVS, Inc.
7292. Rosa Narg CVS, Inc.
7293. Rosecrans Avenue CVS, Inc.
7294. Rosecrans Hawthorne CVS, L.P.
7295. Rosedale NY CVS, L.L.C.
7296. Roselle IL CVS, L.L.C.
7297. Rosemont PA CVS, Inc.
7298. Rosenberg CVS, L.P.
7299. Roslindale CVS, Inc.
7300. Roslindale MA CVS, Inc.
7301. Roslyn CVS, L.L.C.
7302. Ross Haskell CVS, L.P.
7303. Ross Park CVS, Inc.
7304. Roswell CVS, Inc.
7305. Roswell Rivermont Station CVS, Inc.
7306. Round Lake CVS, L.L.C.
7307. Round Rock 79 CVS, L.L.C.
7308. Route 202 Whitpain CVS, Inc.
7309. Route 23 CVS, Inc.
7310. Route 27 CVS, Inc.
7311. Route 59 CVS, L.L.C.
7312. Route 83 Glastonbury CVS, Inc.
7313. Route 83 Palos Heights CVS, L.L.C.
7314. Route 88 CVS, Inc.
7315. Rowlett TX CVS, L.L.C.
7316. Rowley CVS, Inc.
7317. Roxborough CVS, Inc.
7318. Royal Dallas CVS, L.P.
7319. Royal Oak CVS, Inc.
7320. Royersford CVS, Inc.
7321. Rte 52 IL CVS, L.L.C.
7322. Runnemede CVS, Inc.
7323. Russell Ft. Apache CVS, L.L.C.
7324. Rutherford CVS, Inc.
7325. Rx Connections, Inc.
7326. Rx Innovations 4439, L.L.C.
7327. RxAmerica LLC
7328. RXC Acquisition Company
7329. RxHub, L.L.C.
7330. S. Dartmouth CVS, Inc.
7331. S. Fair Oaks Ave CVS, L.L.C..
7332. S. Houston Lake Rd. CVS, Inc.
7333. S. Main St. CVS, Inc.
7334. S. Western Avenue CVS, Inc.
7335. SABH of Arizona, Incorporated
7336. SABH of Maricopa County, Incorporated
7337. Saddle Brook CVS, Inc.
7338. Sagamore Ridge CVS, Inc.
7339. Sagev CVS, L.L.C.
7340. Saginaw CVS, L.P.
7341. Saginaw Lansing CVS, Inc.
7342. Saguaro Health Plan, Inc.
7343. Salem Lynnfield CVS, Inc.
7344. Salem Mall CVS, Inc.
7345. Salem Mass. CVS, Inc.
7346. Salem Pond CVS, Inc.
7347. Salem VA CVS, Inc.
7348. Sam Furr Road CVS, Inc.
7349. Samoset Avenue CVS, Inc.
7350. San Antonio CareCenter Pharmacy, LLC
7351. San Carlos Ft. Myers CVS, L.L.C.
7352. San Clemente CVS, L.L.C.
7353. San Jose Jacksonville CVS, L.L.C.
7354. Sand Pharmacy St Albans 06306 LLC
7355. Sandusky CVS, Inc.
7356. Sandwich CVS, Inc.
7357. Sandy Plains CVS, Inc.
7358. Sandy Springs CVS, Inc.
7359. Sanford River CVS, Inc.
7360. Santa Ana CVS, Inc.
7361. Santa Marguerita CVS, L.P.
7362. Santa Monica CVS, L.P.
7363. Sanus Corp. Health Systems
7364. Sanus Dental Plan of N.J., Inc.
7365. Sanus Dental Plan of Texas, Inc.
7366. Sanus Health Plan of Illinois, Inc.

7367. Sanus Health Plan of Pennsylvania, Inc.
7368. Sanus of Maine, Inc.
7369. Sanus of New York and New Jersey, Inc.
7370. SANUS of New York, Inc.
7371. Sanus Preferred Providers West, Inc.
7372. Saugus CVS, Inc.
7373. Saugus Walnut CVS, Inc.
7374. Sayre CVS, Inc.
7375. SCAFFALE 03 PARTICIPAÇÕES LTDA.,
7376. Schaller Anderson Acquisition, Incorporated
7377. Schaller Anderson Behavioral Health of Maryland, Incorporated
7378. Schaller Anderson Behavioral Health of Tennessee, Incorporated
7379. Schaller Anderson Behavioral Health of Texas, L.L.C.
7380. Schaller Anderson Behavioral Health of Texas, L.P.
7381. Schaller Anderson Behavioral Health, Incorporated
7382. Schaller Anderson Health Plans, LLC
7383. Schaller Anderson Healthcare, L.L.C.
7384. Schaller Anderson Medical Administrators, Incorporated
7385. Schaller Anderson Network of Arizona, L.L.C.
7386. Schaller Anderson of Arizona, L.L.C.
7387. Schaller Anderson of California, L.L.C.
7388. Schaller Anderson of Delaware, Incorporated
7389. Schaller Anderson of Kansas, L.L.C.
7390. Schaller Anderson of Maryland, L.L.C.
7391. Schaller Anderson of Missouri, L.L.C.
7392. Schaller Anderson of Oklahoma, LLC
7393. Schaller Anderson of Tennessee, LLC
7394. Schaller Anderson of Texas Management, L.L.C.
7395. Schaller Anderson of Texas, L.P.
7396. Schaller Anderson, Incorporated
7397. Schaller Anderson, LLC
7398. Schaumburg CVS, L.L.C.
7399. Schmidt Video Virtual Care of Nevada, PLLC
7400. Schnecksville CVS, Inc.
7401. Schoolcraft Detroit CVS, Inc.
7402. Schwab Road CVS, Inc.
7403. Scituate CVS, Inc.
7404. Scotch Plains CVS, Inc.
7405. Scott Houston CVS, L.P.
7406. Scottsboro AL CVS, Inc.
7407. Scottsdale CVS, L.L.C.
7408. SCP 2003C-31 LLC
7409. SCP 2003C-40 LLC
7410. SCP 2003D-66 LLC
7411. SCP 2003D-8 LLC
7412. SCP 2004E-062 LLC
7413. SCP 2005-C21-013 LLC
7414. SCP 2005-C21-074 LLC
7415. SCP 2005C-C20-016 LLC
7416. SCP 2007-C27-013 LLC
7417. SCP 2007-C27-015 LLC
7418. SCP 2007-C27-017 LLC
7419. SCP 2007-C27-025 LLC
7420. SCP 2007-C27-061 LLC
7421. SCP 2007-C27-066 LLC
7422. SCP 2007-C27-084 LLC
7423. SCP 2007-C27-096, L.L.C.
7424. SCP 2007-C27-540 LLC
7425. SCP 2007-C27-546 LLC
7426. SCP 2009-C32-502 LLC
7427. SCP 2009-C32-504 LLC
7428. SCP 2009-C32-513 LLC

7429. SCP 2009-C32-518 LLC
7430. Scranton Davis CVS, Inc.
7431. Scranton Main CVS, Inc.
7432. Scrip World, LLC
7433. Sea Isle City CVS, Inc.
7434. Seaboard Service System, Ltd.
7435. Seaford NY CVS, L.L.C.
7436. Sears Town Mall CVS, Inc.
7437. Seaside Heights CVS, L.L.C.
7438. Seaville NJ CVS, L.L.C.
7439. SEC CVS, Inc.
7440. SEC Lincoln CVS, L.L.C.
7441. SEC Route 14 CVS, L.L.C.
7442. SEC State CVS, L.L.C.
7443. SEC University MN CVS, L.L.C.
7444. Secaucus Seven CVS, Inc.
7445. Sedalia NC CVS, Inc.
7446. Sedwick Durham CVS, L.L.C.
7447. Seekonk Mall CVS, Inc.
7448. Seminole CVS, Inc.
7449. Senip CVS, L.L.C.
7450. Setauket CVS, Inc.
7451. Seven Corners, VA Bob's, Inc.
7452. Seventh Street CVS, INc.
7453. Severn CVS, Inc.
7454. Seymour CVS, Inc.
7455. Shallowford Road CVS, Inc.
7456. Shamokin CVS, Inc.
7457. Sharon CVS, Inc.
7458. Sharon Hill CVS, Inc.
7459. Sheffield Avenue CVS, L.L.C.
7460. Shelby Township CVS, Inc.
7461. Shelbyville Main CVS, Inc.
7462. SHELFCO (NO. 967) LIMITED
7463. Shepherd Houston CVS, L.P.
7464. Sheridan Cooper CVS, L.L.C.
7465. Ship Bottom NJ CVS, L.L.C.
7466. Shirley CVS, L.L.C.
7467. Shoemakerville CVS, Inc.
7468. Shoppers Village CVS, Inc.
7469. Shoppers World CVS, Inc.
7470. Shopperstown CVS, Inc.
7471. Shore Pharmaceutical Providers, LLC
7472. Shorewood CVS, L.L.C.
7473. Showalter CVS, Inc.
7474. Shrewsbury Retailer, Inc.
7475. SHS NewHMO, Inc.
7476. Sibley Chicago CVS, L.L.C.
7477. Sicklerville Road CVS, Inc.
7478. Sillington Road CVS, Inc.
7479. Silver Hill CVS, Inc.
7480. Silverbrook CVS, Inc.
7481. SilverScript Insurance Company
7482. SilverScript, Inc.
7483. SilverScript, L.L.C.
7484. Silverton CVS, Inc.
7485. Simi Valley CVS, Inc.
7486. Simsbury CVS, Inc.
7487. Sisson Road CVS, Inc.
7488. Skillman Mockingbird CVS, L.P.
7489. Skokie CVS, L.L.C.
7490. Sky Acquisition LLC
7491. Skyport Owner's Association
7492. Sloans Lake Holding Corporation
7493. Sloans Lake Managed Care, Inc.
7494. Sloan's Lake Management Corp.
7495. Smith Northampton CVS, Inc.
7496. Smith Palatine CVS, L.L.C.
7497. Smith Providence CVS, Inc.
7498. Smithville CVS, Inc.
7499. Smyrna Concord Road CVS, Inc.
7500. Smyrna CVS, Inc.
7501. Snellville CVS, Inc.
7502. Snellville GA CVS, Inc.
7503. Snow Road CVS, Inc.
7504. Socastee SC CVS, Inc.
7505. Solomon Office Associates, L.L.C.
7506. Solomons CVS, Inc.
7507. Somerdale CVS, Inc.
7508. Somers Point CVS, Inc.
7509. Somerset CVS, Inc.
7510. Somerville MA CVS, Inc.
7511. Somerville, MA Bob's, Inc.
7512. Sopco, Inc.

7513. Souderton CVS, Inc.
7514. Sourcing Co, LLC
7515. South Attleboro CVS, Inc.
7516. South Boston CVS, Inc.
7517. South Bristol Street CVS, Inc.
7518. South Brook CVS, Inc.
7519. South Brunswick CVS, Inc.
7520. South Carolina CVS Pharmacy, L.L.C.
7521. South Carolina CVS, Inc.
7522. South Dixie CVS, L.L.C.
7523. South Hills CVS Store, Inc.
7524. South Lincoln Newtown CVS, Inc.
7525. South Lyon CVS, Inc.
7526. South Mall CVS, Inc.
7527. South Merrimack CVS, Inc.
7528. South Nashua CVS, Inc.
7529. South Philadelphia CVS, Inc.
7530. South Plainfield CVS, Inc.
7531. South Post Oak CVS, L.P.
7532. South Providence CVS, Inc.
7533. South Sandwich Store Corporation
7534. South Shore League City CVS, L.P.
7535. South Shore Retailer, Inc.
7536. South Street CVS, Inc.
7537. South Wabash CVS, L.L.C.
7538. South Windsor CVS, Inc.
7539. South Yarmouth CVS, Inc.
7540. Southbridge Saga CVS, Inc.
7541. Southbury CVS, Inc.
7542. Southeast Pharmacy Consultants, Inc.
7543. Southern Buckeye CVS, L.L.C.
7544. Southern Greenfield CVS, L.L.C.
7545. Southern Health Services, Inc.
7546. Southern Tempe CVS, L.L.C.
7547. Southington Main Street CVS, Inc.
7548. Southington Queen CVS, Inc.
7549. Southlake CVS, L.P.
7550. Southmore CVS, L.P.
7551. Southport NC CVS, Inc.
7552. Southwest Health Plan, Inc.
7553. Sparkleberry Lane CVS, Inc.
7554. Spatium, LLC
7555. Specialized Pharmacy Services, LLC
7556. Specialty Carts, LLC
7557. Specialty Services Holding LLC
7558. Speedwell CVS Urban Renewal, L.L.C.
7559. Speen Street CVS, Inc.
7560. Spencer Hwy CVS, L.P.
7561. Spencer Main CVS, Inc.
7562. Spencer PharmaCare Pharmacy, Inc.
7563. Spinnaker Bidco Limited
7564. Spinnaker Topco Limited
7565. Spring CVS, L.P.
7566. Spring Cypresswood CVS, L.P.
7567. Spring Falvel TX CVS, L.L.C.
7568. Spring Valley Houston CVS, L.P.
7569. Spring Valley Richardson CVS, L.P.
7570. Springfield Avenue CVS, Inc.
7571. Springfield CVS, Inc.
7572. Springfield Gardens CVS, L.L.C.
7573. Springfield IL CVS, L.L.C.
7574. Springfield NJ CVS, L.L.C.
7575. Springfield PA CVS, Inc.
7576. Springfield Post Road CVS, Inc.
7577. Springfield Sparns CVS, Inc.
7578. Springfield St. James CVS, Inc.
7579. Springhouse PA CVS, Inc.
7580. Sproul Broomall CVS, Inc.
7581. Spruce Street CVS, Inc.
7582. Square One CVS, Inc.
7583. SR 436 CVS, L.L.C.
7584. St. Aug Tuscan, L.L.C.
7585. St. Aug Watson, L.L.C.
7586. St. Charles CVS, L.L.C.
7587. St. Clair CVS, Inc.
7588. St. Cloud CVS, L.L.C.
7589. St. George's Avenue CVS, Inc.
7590. St. Louis Park CVS, L.L.C.
7591. St. Louis PharmaCare Pharmacy, Inc.

7592. St. Mary's CVS, Inc.
7593. St. Paul MN CVS, L.L.C.
7594. St. Petersburg CVS, Inc.
7595. Stamford CVS, Inc.
7596. Stamford Hope Street CVS, Inc.
7597. Stamford Ridgeway CVS, Inc.
7598. Stamford Town Center CVS, Inc.
7599. Standard Drug Company
7600. State College CVS, Inc.
7601. State Park Road CVS, Inc.
7602. State St. CVS Store, Inc.
7603. State Street CVS, L.L.C.
7604. Staten Island New York CVS, Inc.
7605. Station Avenue CVS, Inc.
7606. Steeplegate CVS, Inc.
7607. Stenton Avenue CVS, Inc.
7608. Stephens City VA CVS, Inc.
7609. Stephenville TX CVS, L.L.C.
7610. Sterling Healthcare Services, Inc.
7611. Sterling Healthcare Services, LLC
7612. Sterling Heights CVS, Inc.
7613. Sterrettania Road CVS, Inc.
7614. Steubner-Airline CVS, L.P.
7615. Stockbridge CVS, Inc.
7616. Stokes Road CVS, Inc.
7617. Stone Mountain CVS, Inc.
7618. Stoneham CVS, Inc.
7619. Stony Island Chicago CVS, L.L.C.
7620. Stoughton CVS, Inc.
7621. Strategic Resource Company
7622. Streamwood CVS, L.L.C.
7623. Stroudsburg Mall CVS, Inc.
7624. Structured Benefits Inc.
7625. Sturbridge PharmaCare Pharmacy, Inc.
7626. Sublett Matlock CVS, L.P.
7627. Suburban Medical Services, LLC
7628. Sudbury CVS, Inc.
7629. Sudbury Wayside CVS, Inc.
7630. Suffield Agawam CVS, Inc.
7631. Suffield CVS, Inc.
7632. Sugar Land CVS, L.P.
7633. Sugarloaf Parkway CVS, Inc.
7634. Summer St. CVS, Inc.
7635. Summit Health Plan, Inc
7636. Sumner Belmont CVS, Inc.
7637. Sun City AZ CVS, L.L.C.
7638. Sun Lakes CVS, L.L.C.
7639. Sun Pharmacy, Limited Liability Company
7640. Sunderland Road CVS, Inc.
7641. Sunlake Land CVS, L.L.C.
7642. Sunnyside NY CVS, L.L.C.
7643. Sunrise FL CVS, L.L.C.
7644. Sunset Crossing CVS, Inc.
7645. Sunset Henderson CVS, L.L.C.
7646. Superior Care Pharmacy, Inc.
7647. Superior Care Pharmacy, LLC
7648. Superior Township CVS, L.L.C.
7649. SureScripts LLC
7650. SureScripts-RxHub, LLC
7651. Surfside CVS, Inc.
7652. Surprise CVS, L.L.C.
7653. Sutter Health and Aetna Administrative Services LLC
7654. Sutter Health and Aetna Insurance Company
7655. Sutter Health and Aetna Insurance Holding Company LLC
7656. Suwanee CVS, Inc.
7657. Swamp New Britain CVS, Inc.
7658. Swampscott Retailer, Inc.
7659. Swansea CVS, Inc.
7660. Swansea IL CVS, L.L.C.
7661. Swatara Square CVS, Inc.
7662. SWC Camelback CVS, L.L.C.
7663. SWC CVS, Inc.
7664. SWC M-59 CVS, L.L.C.
7665. SWC Moulton Pkwy CVS, L.L.C.
7666. SWC Progress Boulevard CVS, L.L.C.
7667. SWC Union Hills Drive CVS, L.L.C.
7668. Sylmar Square CVS, Inc.
7669. Synergy Merger, LLC

7670. Syracuse Genesee St. CVS Store, Inc.
7671. Systran Networks, Inc.
7672. T2 Medical, Inc.
7673. Tabernacle CVS, Inc.
7674. Taconic Park CVS Store, Inc.
7675. Taft Street CVS, Inc.
7676. Taft University CVS, Inc.
7677. Takoma Park CVS, Inc.
7678. Tamaqua CVS, Inc.
7679. Tampa Lynn CVS, Inc.
7680. Tanker Six, LLC
7681. Tanner Houston CVS, L.P.
7682. Tannersville CVS, Inc.
7683. Tara Boulevard CVS, Inc.
7684. Tarzana CVS, Inc.
7685. Taunton County CVS, Inc.
7686. Taunton Retailer, Inc.
7687. TCPI Acquisition Corp.
7688. TCPI Acquisition, LLC
7689. TDI Managed Care Services, Inc.
7690. Teasley Denton CVS, L.P.
7691. Telegraph CVS, Inc.
7692. Tennessee CVS Pharmacy, L.L.C.
7693. Terrace Oaks Houston CVS, L.P.
7694. Terrence D. Morton, Jr., MD, P.C.
7695. Tewksbury - Oaks, CVS., Inc.
7696. Tewksbury CVS, Inc.
7697. Texas Health + Aetna Health Insurance Company
7698. Texas Health + Aetna Health Insurance Holding Company LLC
7699. Texas Health + Aetna Health Plan Inc.
7700. Texas Health Network, Inc.
7701. Texas Road CVS, Inc.
7702. The Associated Products Company
7703. The City CVS, Inc.
7704. The ETHIX Corporation
7705. The Jeskey Clinic, LLC
7706. The Lane Drug Company
7707. The Mall of Orange CVS, Inc.
7708. The New Group Health Plan, Inc.
7709. The Vasquez Group Inc.
7710. TheraCom, L.L.C.
7711. Third Avenue N.Y. CVS, Inc.
7712. Third Lake CVS, L.L.C.
7713. Third Party Claims Management, Inc.
7714. Thomas 24th Phoenix CVS, L.L.C.
7715. Thomas 43rd Phoenix CVS, L.L.C.
7716. Thomas Avondale CVS, L.L.C.
7717. Thomas E. Emma CVS Store, L.L.C.
7718. Thomas Phoenix CVS, L.L.C.
7719. Thomaston CVS, Inc.
7720. Thornbury CVS, Inc.
7721. Thorndale PA CVS, Inc.
7722. Thousand Oaks CVS, Inc.
7723. Three Forks Apothecary, LLC
7724. Thunderbird Phoenix CVS, L.L.C.
7725. Thundermist Aviation, Inc.
7726. Thundermist Services, LLC
7727. Tianjin An Hai Tai Hua Medical Information Technology Co., Ltd
7728. Tinley Park CVS, L.L.C.
7729. Tinton Falls CVS, Inc.
7730. Titus Avenue CVS, Inc.
7731. Titusville CVS, L.L.C.
7732. Tiverton CVS, Inc.
7733. Tolland CVS, Inc.
7734. Tomball CVS, L.P.
7735. Tonawanda CVS, Inc.
7736. Toombs Avenue CVS, L.L.C.
7737. Topanga Canyon CVS, Inc.
7738. Torrance Blvd CVS, L.L.C.
7739. Torrance Western CVS, Inc.
7740. Torresdale CVS, Inc.
7741. Torrington Main Street CVS, Inc.
7742. Totowa CVS, Inc.
7743. Totowa Union CVS, Inc.
7744. Towamencin CVS, Inc.
7745. Towanda CVS, Inc.
7746. Tower CVS, Inc.
7747. Town Center CVS, Inc.
7748. Town Center Orlando CVS, L.L.C.

7749. Town Plaza CVS, Inc.
7750. Towne Centre CVS, L.L.C.
7751. Towne Lake Parkway CVS, Inc.
7752. Township Line CVS, Inc.
7753. Towson CVS, Inc.
7754. Trappe CVS, Inc.
7755. Tree Merger Sub, Inc.
7756. Tremont Avenue Bronx CVS, L.L.C.
7757. Tremont Boston CVS, Inc.
7758. Tremont CVS, Inc.
7759. Trenton CVS, Inc.
7760. Trevose Hospitality, Inc.
7761. Trumbull CVS, Inc.
7762. Trumbull Four, Inc.
7763. Trumbull One, Inc.
7764. Tucker CVS, Inc.
7765. Tucson AZ CVS, L.L.C.
7766. Turnpike Augusta CVS, Inc.
7767. Turnpike Street CVS, Inc.
7768. Tuscaloosa CVS, Inc.
7769. Twain MergerSub Corp.
7770. Twain MergerSub, L.L.C.
7771. Twenty Third Fairmount CVS, Inc.
7772. Twinsburg Claims, Inc.
7773. Twinsurance Limited
7774. Tyler Mall CVS, Inc.
7775. Tyler TX CVS, L.P.
7776. Tyrone CVS, Inc.
7777. U. S. Health Insurance Company
7778. U.S. Health Aviation Corp.
7779. U.S. Health Information Systems, Inc.
7780. U.S. Health Insurance Company
7781. U.S. Healthcare Advantage, Inc.
7782. U.S. Healthcare Advantage, LLC
7783. U.S. Healthcare Dental Plan Inc.
7784. U.S. Healthcare Dental Plan, Inc.
7785. U.S. Healthcare Financial Services, LLC
7786. U.S. Healthcare Holdings, LLC
7787. U.S. Healthcare of Georgia, Inc.
7788. U.S. Healthcare of New Hampshire, Inc
7789. U.S. Healthcare of the Carolinas, Inc.
7790. U.S. Healthcare of Washington Inc.
7791. U.S. Healthcare Properties, Inc.
7792. U.S. Healthcare, Inc.
7793. U.S. Healthcare, Inc. (Michigan)
7794. U.S. Managed Care, Inc.
7795. U.S. PatriotCare, Inc.
7796. U.S. Phoenix Corporation
7797. U.S. Quality Algorithms, Inc.
7798. UAC Holding, Inc.
7799. UC Acquisition Corp.
7800. UC Acquisition, LLC
7801. Ulster CVS Store, Inc.
7802. Uni-Care Health Services of Maine, Inc.
7803. Uni-Care Health Services of Maine, LLC
7804. Union Boulevard CVS, Inc.
7805. Union City CVS, Inc.
7806. Union Lehigh CVS, Inc.
7807. Union St. CVS, Inc.
7808. Uniontown CVS, Inc.
7809. United PharmaCare Services, L.P.
7810. United PM Services General, Inc.
7811. United PM Services Limited, Inc.
7812. United States Health Care System, Inc.
7813. United States Health Care Systems of Pennsylvania, Inc.
7814. United States Health Care Systems, Inc.
7815. United States Home Health Care Systems, Inc.
7816. United States Physicians Care Systems, Inc.
7817. Universal American Corp.
7818. University CVS, Inc.
7819. University Drive-Amherst CVS, Inc.
7820. University Mesa CVS, L.L.C.

7821. University St. Paul CVS, L.L.C.
7822. University Tamarac CVS, L.L.C.
7823. University-Wheaton CVS, Inc.
7824. University-Wheaton Peoples, Inc.
7825. Upper Darby CVS, Inc.
7826. Upper Gwynedd CVS, Inc.
7827. Upper Hembree CVS, Inc.
7828. Upper Uwchlan CVS, Inc.
7829. US 19 Port Richey CVS, L.L.C.
7830. US Bioservices Corporation
7831. USHC Management Services Corporation
7832. Utah CVS Pharmacy, L.L.C.
7833. Uvalde Houston CVS, L.P.
7834. Uxbridge CVS, Inc.
7835. V Memorial Houston CVS, L.P.
7836. Val Mesa Pharmacy, Inc.
7837. Valley Road CVS, Inc.
7838. Valley Verde NV CVS, L.L.C.
7839. Value Health Care Services LLC
7840. Van Buren Goodyear CVS, L.L.C.
7841. Van Houten CVS, Inc.
7842. Van Nuys Boulevard CVS, Inc.
7843. Vanoak Plaza CVS, Inc.
7844. VAPS Acquisition Company, LLC
7845. Vassar Poughkeepsie CVS, L.L.C.
7846. Vaughn Montgomery CVS, Inc.
7847. Vaughn Road CVS, Inc.
7848. Velmeir Euclid Co., L.L.C.
7849. Venice FL CVS, L.L.C.
7850. Vermont CVS Pharmacy, L.L.C.
7851. Vernon CVS, Inc.
7852. Vestal Ave. CVS Store, Inc.
7853. VHCS Acquisition Sub, LLC
7854. Victor Valley CVS, Inc.
7855. Victory Van Nuys CVS, L.P.
7856. Village Chestnut Hill CVS, Inc.
7857. Village Grove CVS, Inc.
7858. Village Plaza CVS, Inc.
7859. Villanova Street CVS, L.P.
7860. Vine & Taft CVS, Inc.
7861. Vineland CVS, Inc.
7862. Vinings Jubilee CVS, Inc.
7863. Virginia CVS Pharmacy, L.L.C.
7864. Virginia Mason Health Plan, Inc.
7865. Virtual Acute General Medical PLLC
7866. Virtual Behavioral Health PLLC
7867. Virtual Primary Care PLLC
7868. Vista Health of South Florida, Inc.
7869. Vista Healthplan, Inc.
7870. Vital Care Infusions, Inc.
7871. VivaHealth, Incorporated
7872. Voorhees CVS, L.L.C.
7873. Vultee Street CVS, Inc.
7874. W. Imperial Hwy CVS, L.L.C.
7875. W. Mifflin CVS, Inc.
7876. W. Ponce DeLeon CVS, Inc.
7877. W. Redondo Beach Blvd CVS, L.L.C.
7878. W. Springfield Elm CVS, Inc.
7879. Wade Hampton Blvd. CVS, Inc.
7880. Wadsworth CVS, Inc.
7881. Wadsworth High Street CVS, Inc.
7882. Wagaraw Road CVS, Inc.
7883. Wake Forest CVS, Inc.
7884. Wakefield CVS, Inc.
7885. Wakefield Mass. CVS, Inc.
7886. Waldorf MD CVS, L.L.C.
7887. Walkertown NC CVS, Inc.
7888. Wal-Lex CVS, Inc.
7889. Wallingford Acquisition, Inc.
7890. Wallingford CVS, Inc.
7891. Walmsley Blvd. Peoples, Inc.
7892. Walnut Garland CVS, L.P.
7893. Walnut Hill CVS, L.P.
7894. Walnut Hill Irving CVS, L.L.C.
7895. Walnut Hill Plaza CVS, Inc.
7896. Walnut Street CVS, Inc.
7897. Walpole CVS, Inc.
7898. Walpole Main Street CVS, Inc.
7899. Walpole Plaza CVS, Inc.
7900. Walters Houston CVS, L.P.
7901. Waltham CVS, Inc.
7902. Waltham-Moody CVS, Inc.
7903. Wappingers Falls CVS, L.L.C.

7904. Ware CVS, Inc.
7905. Wareham CVS, Inc.
7906. Waretown CVS, L.L.C.
7907. Warm Springs Rainbow CVS, L.L.C.
7908. Warm Springs Road CVS, L.L.C.
7909. Warminster CVS, Inc.
7910. Warminster, PA Bob's, Inc.
7911. Warner Higley Gilbert CVS, L.L.C.
7912. Warner Huntington CVS, L.P.
7913. Warner McQueen CVS, L.L.C.
7914. Warren Avenue CVS, Inc.
7915. Warren CVS, L.L.C.
7916. Warren R.I. CVS, Inc.
7917. Warrenville IL CVS, L.L.C.
7918. Warwick Centerville CVS, Inc.
7919. Warwick City Hall CVS, Inc.
7920. Warwick Main CVS, L.L.C.
7921. Warwick Neck CVS, Inc.
7922. Warwick NY CVS, L.L.C.
7923. Warwick Retailer, Inc.
7924. Warwick Shaw Plaza CVS, Inc.
7925. Warwick West Shore CVS, Inc.
7926. Washington Chicago CVS, L.L.C.
7927. Washington Connecticut CVS, Inc.
7928. Washington CVS Pharmacy, L.L.C.
7929. Washington E Street CVS, Inc.
7930. Washington Easton CVS, Inc.
7931. Washington GA CVS, L.L.C.
7932. Washington Lamb CVS, L.L.C.
7933. Washington Retailer, Inc.
7934. Washington Square CVS, Inc.
7935. Washington Wisconsin CVS, Inc.
7936. Water Street Fitchburg CVS, Inc.
7937. Waterbury Chase CVS, Inc.
7938. Waterbury West Main CVS, Inc.
7939. Waterbury Westwood CVS, Inc.
7940. Waterbury Wolcott CVS, Inc.
7941. Waterford Boston Post CVS, Inc.
7942. Watertower Plaza CVS, Inc.
7943. Watertown Main Street CVS, Inc.
7944. Waterville CVS, Inc.
7945. Waterville Valley CVS, Inc.
7946. Waterway Drive CVS, Inc.
7947. Waukegan CVS, L.L.C.
7948. Waverly Pharmacy, LLC
7949. Waverly TN CVS, Inc.
7950. Wayland CVS, Inc.
7951. Wayne Avenue CVS, Inc.
7952. Wayne CVS, Inc.
7953. Weber Medical Systems LLC
7954. Webster Avenue CVS, Inc.
7955. Webster Main St. CVS, Inc.
7956. Webster PharmaCare Pharmacy, Inc.
7957. Webster TX CVS, L.P.
7958. Weddington NC CVS, Inc.
7959. Weir CanyonSerrano CVS, Inc.
7960. Wellesley CVS, Inc.
7961. Wellpartner, Inc.
7962. Wellpartner, LLC
7963. WellPath of South Carolina, Inc.
7964. WellPath Select Holding Company, Inc.
7965. WellPath Select, Inc.
7966. Wesley Chapel CVS, L.L.C.
7967. West 14th Street CVS, L.L.C.
7968. West 235th Bronx CVS, L.L.C.
7969. West 42nd Street CVS, L.L.C.
7970. West Aspetuck CVS, Inc.
7971. West Avenue CVS, Inc.
7972. West Bancroft Toledo CVS, Inc.
7973. West Boylston CVS, Inc.
7974. West Bridgewater CVS, Inc.
7975. West Broad Street CVS, Inc.
7976. West Broad Street Peoples, Inc.
7977. West Broadway CVS, Inc.
7978. West Calhoun CVS, Inc.
7979. West Central Toledo CVS, Inc.
7980. West Chelten Avenue CVS, Inc.
7981. West Chester Pike CVS, Inc.
7982. West College Ave CVS, Inc.
7983. West Covina CVS, Inc.
7984. West Hartford Boulevard CVS, Inc.
7985. West Hartford CVS, Inc.
7986. West Hartford Route 4 CVS, Inc.

7987. West Hubbard CVS, L.L.C.
7988. West Hunter Street CVS, L.L.C.
7989. West Jackson CVS, L.L.C.
7990. West Lemon CVS, Inc.
7991. West Main Freehold CVS, Inc.
7992. West Main Street CVS, Inc.
7993. West Miller CVS, Inc.
7994. West Newton Retailer, Inc.
7995. West Peabody CVS, Inc.
7996. West Pike Street CVS, L.L.C.
7997. West Roxbury CVS, Inc.
7998. West Springfield CVS, Inc.
7999. West Virginia CVS Pharmacy, L.L.C.
8000. West Warwick CVS, Inc.
8001. West Warwick Main Street CVS, Inc.
8002. West Warwick Providence CVS, Inc.
8003. Westampton CVS, Inc.
8004. Westboro CVS, Inc.
8005. Westboro PharmaCare Pharmacy, Inc.
8006. Westborough Computer Drive CVS, Inc.
8007. Western Chic CVS, L.L.C.
8008. Western CVS, L.L.C.
8009. Western Reserve Health Plan, Inc.
8010. Western Reserve Individual Practice Association, Inc.
8011. Westfield Franklin CVS, Inc.
8012. Westfield Little River CVS, Inc.
8013. Westfield Shops CVS, Inc.
8014. Westford CVS, Inc.
8015. Westhaven Services Co., LLC
8016. Westheimer Fondren CVS, L.P.
8017. Westheimer Houston CVS, L.P.
8018. Westland CVS, Inc.
8019. Westland MI CVS, L.L.C.
8020. Westminster Mall CVS, Inc.
8021. Westmont CVS, L.L.C.
8022. Weston Blatt CVS, L.L.C.
8023. Westwood CVS, Inc.
8024. Westwood Washington CVS, Inc.
8025. Wethersfield CVS, Inc.
8026. Weymouth Retailer, Inc.
8027. Whalley Avenue CVS, Inc.
8028. Whalon Street CVS, Inc.
8029. Wheaton CVS, L.L.C.
8030. White Bear Lake CVS, L.L.C.
8031. White Cross Stores Inc., No. 14
8032. White Lake CVS, Inc.
8033. White Plains Eastchester CVS, Inc.
8034. White Plains Lexington CVS, Inc.
8035. White Plains Retailer, Inc.
8036. Whitehall CVS, Inc.
8037. Whitestone CVS, L.L.C.
8038. Whitinsville CVS, Inc.
8039. Whitman Plaza CVS, Inc.
8040. Whitmore Lake CVS, Inc.
8041. Whitpain CVS, Inc.
8042. Whittier Blvd CVS, L.L.C.
8043. Whittier Colima CVS, Inc.
8044. Wilcrest Houston CVS, L.P.
8045. Wiles Road CVS, L.L.C.
8046. Williamsbridge Bronx CVS, L.L.C.
8047. Williamsburg CVS, Inc.
8048. Williamson Drug Company, Incorporated
8049. Williamson Drug Company, LLC
8050. Willimantic Main Street CVS, Inc.
8051. Willingboro CVS, Inc.
8052. Willow Grove CVS, Inc.
8053. Willow Hoboken CVS, Inc.
8054. Wilmer Road CVS, L.L.C.
8055. Wilmington CVS, L.L.C.
8056. Wilmington Plaza CVS, Inc.
8057. Wilmore Washington CVS, L.L.C.
8058. Wilson Blvd. CVS, Inc.
8059. Wilson Boulevard CVS, Inc.
8060. Wilton CT CVS, Inc.
8061. Winchester CVS, Inc.
8062. Winchester Huntsville CVS, Inc.
8063. Winchester VA CVS, Inc.
8064. Wind Gap CVS, Inc.
8065. Windsor Broad Street CVS, Inc.

8066. Windsor CVS, Inc.
8067. Windward Plaza CVS, Inc.
8068. Winfield CVS, L.L.C.
8069. Winsted CVS, Inc.
8070. Winter Park CVS, Inc.
8071. Winthrop CVS, Inc.
8072. Wisconsin Avenue CVS, Inc.
8073. Wisconsin CVS Pharmacy, L.L.C.
8074. Wise Avenue CVS, Inc.
8075. Wissahickon Payment Administrators, Inc.
8076. Wisteria Drive Peoples, Inc.
8077. Woburn Centre CVS, Inc.
8078. Woburn Mall CVS, Inc.
8079. Wollaston Quincy CVS, Inc.
8080. Woodbridge CVS, Inc.
8081. Woodbury MN CVS, L.L.C.
8082. Woodbury/Red Bank CVS, Inc.
8083. Woodhaven CVS, Inc.
8084. Woodlawn Avenue CVS, Inc.
8085. Woodlawn Chicago CVS, L.L.C.
8086. Woodridge CVS, L.L.C.
8087. Woodruff Realty Associates, L.L.C.
8088. Woodruff Road CVS, Inc.
8089. Woodside CVS, L.L.C.
8090. Woodside NY CVS, L.L.C.
8091. Woodstock CVS, Inc.
8092. Woodstock CVS, L.L.C.
8093. Woodville CVS, Inc.
8094. Woodward Detroit CVS, L.L.C.
8095. Woodward Manalapan CVS, LL.C.
8096. Woodward Royal Oak CVS, L.L.C.
8097. Woolwich CVS, L.L.C.
8098. Woonsocket CVS, Inc.
8099. Woonsocket Prescription Center, Incorporated
8100. Worcester - Food Village CVS, Inc.
8101. Worcester Center CVS, Inc.
8102. Worcester Park CVS, Inc.
8103. Worcester PharmaCare Pharmacy, Inc.
8104. Worcester-June St. CVS, Inc.
8105. Worcester-Lincoln Plaza CVS, Inc.
8106. Worcester-Stafford CVS, Inc.
8107. Worcester-Tatnuck Square CVS, Inc.
8108. Work & Family Benefits, Inc.
8109. Workers Comp Advantage, Inc.
8110. WP Smart Holdings, LLC
8111. Wrightstown CVS, Inc.
8112. Wrightwood Chicago CVS, L.L.C.
8113. Wylie CVS, L.P.
8114. Wyoming MI CVS, Inc.
8115. Yale Houston CVS, L.P.
8116. Yardley CVS, Inc.
8117. Yarmouth CVS, Inc.
8118. Yeadon (Pa.) CVS, Inc.
8119. Yonkers Bronx River CVS, L.L.C.
8120. Yonkers Central Park CVS, Inc.
8121. Yorba Linda CVS, Inc.
8122. York Mall CVS, Inc.
8123. York Road CVS, Inc.
8124. Ypsilanti Township CVS, L.L.C.
8125. Zephyrhills CVS, L.L.C.
8126. Zieglersville PA CVS, Inc.
8127. Zinc Health Services, LLC
8128. Zinc Health Ventures, LLC
8129. Zion IL CVS, L.L.C.
8130. ZS Acquisition Company, LLC

EXHIBIT K

Subdivision Participation and Release Form

Governmental Entity:	State:
Authorized Official:	
Address 1:	
Address 2:	
City, State, Zip:	
Phone:	
Email:	

The governmental entity identified above ("*Governmental Entity*"), in order to obtain and in consideration for the benefits provided to the Governmental Entity pursuant to the Settlement Agreement dated December 9, 2022 ("*CVS Settlement*"), and acting through the undersigned authorized official, hereby elects to participate in the CVS Settlement, release all Released Claims against all Released Entities, and agrees as follows.

1. The Governmental Entity is aware of and has reviewed the CVS Settlement, understands that all terms in this Participation and Release Form have the meanings defined therein, and agrees that by executing this Participation and Release Form, the Governmental Entity elects to participate in the CVS Settlement and become a Participating Subdivision as provided therein.

2. The Governmental Entity shall promptly, and in any event no later than 14 days after the Reference Date and prior to the filing of the Consent Judgment, dismiss with prejudice any Released Claims that it has filed. With respect to any Released Claims pending in *In re National Prescription Opiate Litigation*, MDL No. 2804, the Governmental Entity authorizes the Plaintiffs' Executive Committee to execute and file on behalf of the Governmental Entity a Stipulation of Dismissal with Prejudice substantially in the form found at [website link to national settlement website to be provided].

3. The Governmental Entity agrees to the terms of the CVS Settlement pertaining to Participating Subdivisions as defined therein.

4. By agreeing to the terms of the CVS Settlement and becoming a Releasor, the Governmental Entity is entitled to the benefits provided therein, including, if applicable, monetary payments beginning after the Effective Date.

5. The Governmental Entity agrees to use any monies it receives through the CVS Settlement solely for the purposes provided therein.

6. The Governmental Entity submits to the jurisdiction of the court in the Governmental Entity's state where the Consent Judgment is filed for purposes limited to that court's role as provided in, and for resolving disputes to the extent provided in, the CVS Settlement. The Governmental Entity likewise agrees to arbitrate before the National Arbitration Panel

as provided in, and for resolving disputes to the extent otherwise provided in, the CVS Settlement.

7. The Governmental Entity has the right to enforce the CVS Settlement as provided therein.

8. The Governmental Entity, as a Participating Subdivision, hereby becomes a Releasor for all purposes in the CVS Settlement, including without limitation all provisions of Section XI (Release), and along with all departments, agencies, divisions, boards, commissions, districts, instrumentalities of any kind and attorneys, and any person in their official capacity elected or appointed to serve any of the foregoing and any agency, person, or other entity claiming by or through any of the foregoing, and any other entity identified in the definition of Releasor, provides for a release to the fullest extent of its authority. As a Releasor, the Governmental Entity hereby absolutely, unconditionally, and irrevocably covenants not to bring, file, or claim, or to cause, assist or permit to be brought, filed, or claimed, or to otherwise seek to establish liability for any Released Claims against any Released Entity in any forum whatsoever. The releases provided for in the CVS Settlement are intended by the Parties to be broad and shall be interpreted so as to give the Released Entities the broadest possible bar against any liability relating in any way to Released Claims and extend to the full extent of the power of the Governmental Entity to release claims. The CVS Settlement shall be a complete bar to any Released Claim.

9. The Governmental Entity hereby takes on all rights and obligations of a Participating Subdivision as set forth in the CVS Settlement.

10. In connection with the releases provided for in the CVS Settlement, each Governmental Entity expressly waives, releases, and forever discharges any and all provisions, rights, and benefits conferred by any law of any state or territory of the United States or other jurisdiction, or principle of common law, which is similar, comparable, or equivalent to § 1542 of the California Civil Code, which reads:

> **General Release; extent.** A general release does not extend to claims that the creditor or releasing party does not know or suspect to exist in his or her favor at the time of executing the release that, if known by him or her would have materially affected his or her settlement with the debtor or released party.

A Releasor may hereafter discover facts other than or different from those which it knows, believes, or assumes to be true with respect to the Released Claims, but each Governmental Entity hereby expressly waives and fully, finally, and forever settles, releases and discharges, upon the Effective Date, any and all Released Claims that may exist as of such date but which Releasors do not know or suspect to exist, whether through ignorance, oversight, error, negligence or through no fault whatsoever, and which, if known, would materially affect the Governmental Entities' decision to participate in the CVS Settlement.

11. Nothing herein is intended to modify in any way the terms of the CVS Settlement, to which Governmental Entity hereby agrees. To the extent this Participation and Release Form is

interpreted differently from the CVS Settlement in any respect, the CVS Settlement controls.

I have all necessary power and authorization to execute this Participation and Release Form on behalf of the Governmental Entity.

Signature: _____

Name: _____

Title: _____

Date: _____

EXHIBIT L

Settlement Fund Administrator Terms

[Exhibit to be inserted prior to the Initial Subdivision Participation Date]

EXHIBIT M-1: PAYMENT SCHEDULE

Payment Year	Maximum Additional Remediation Amount & All Attorneys' Fees & Costs Funds (Includes CB Fee on Credits)	Maximum Base Payments (38%)	Maximum Incentive Payment A (62%)	Maximum Incentive Payment B (28%)	Maximum Incentive Payment C (28%)	Maximum Incentive Payment D @ 6%	Maximum Total Remediation	Maximum Overall Total
Year 1 June 30, 2023	$125,329,964	$306,016,374	---	---	---	---	$306,016,374	$431,346,338
Year 2 June 30, 2024	$113,977,078	$81,058,849	$162,912,910	$81,456,455	$81,456,455	---	$243,971,759	$357,948,837
Year 3 June 30, 2025	$128,577,766	$161,989,258	$325,567,678	$162,783,839	$162,783,839	---	$487,556,936	$616,134,702
Year 4 June 30, 2026	$128,577,766	$161,989,258	$325,567,678	$162,783,839	$162,783,839	---	$487,556,936	$616,134,702
Year 5 June 30, 2027	$128,577,767	$161,989,258	$325,567,678	$162,783,839	$162,783,839	---	$487,556,936	$616,134,703
Year 6 June 30, 2028	---	$161,989,257	$325,567,679	$137,108,875	$137,108,874	$51,349,930	$487,556,936	$487,556,936
Year 7 June 30, 2029	---	$153,896,217	$309,302,202	$128,976,136	$128,976,136	$51,349,930	$463,198,419	$463,198,419
Year 8 June 30, 2030	---	$145,803,177	$293,036,724	$120,843,397	$120,843,397	$51,349,930	$438,839,901	$438,839,901
Year 9 June 30, 2031	---	$145,674,735	$292,778,585	$120,714,327	$120,714,328	$51,349,930	$438,453,320	$438,453,320
Year 10 June 30, 2032	---	$145,674,735	$292,778,585	$120,714,328	$120,714,327	$51,349,930	$438,453,320	$438,453,320
Total	**$625,040,341**	**$1,626,081,118**	**$2,653,079,719**	**$1,198,165,035**	**$1,198,165,034**	**$256,749,650**	**$4,279,160,837**	**$4,904,201,178**

NOTES:

1. The Maximum Additional Remediation Amount and the state and subdivision attorneys' fees and costs amounts are broken out into separate columns in Exhibit M-3. All payments shown in this schedule are maximum figures.

2. All annual and total figures for Maximum Additional Remediation Amount & All Attorneys' Fees & Costs Fund are maximum figures that may never be exceeded. They are subject to reduction as set forth in the Agreement and its exhibits.

3. All annual and total figures for Maximum Base Payment, Maximum Incentive Payment A, Maximum Incentive Payment B, and Maximum Incentive Payment C are maximum figures that may never be exceeded and reflect the following:
   - An assumption that all Eligible States are Settling States.
   - An assumption that all Settling States earn the full amount of the relevant incentive payment.
   - The figures are subject to reduction as set forth in the Agreement.

4. All annual and total figures for Maximum Incentive Payment D are maximum figures that reflect the following:
   - An assumption that all Eligible States are Settling States.
   - An assumption that all Settling States earn 100% of Incentive Payment C and hence the full amount of D at a value of 6%.
   - Exhibit M-2 shows maximums based on Incentive Payment D values higher than 6% if Incentive Payment C is not earned in full. As set forth in the Agreement and Exhibit M-2, any Incentive Payments D at values higher than 6% for a Settling State must be offset in full by corresponding reductions to Incentive Payment C for that Settling State in prior Payment Years and the same Payment Year, resulting in zero increase to the total Maximum Total Remediation amount ($4,279,160,837) and the total Maximum Overall Total amount ($4,904,201,178).
   - The figures are subject to reduction as set forth in the Agreement.

5. All annual and total figures for Maximum Total Remediation and Maximum Overall Total are maximum payments that reflect the following:
   - The credit amount of $117,882,400 for prior settlements has already been applied.
   - An assumption that all Eligible States are Settling States.
   - An assumption that all Settling States earn their full potential maximum amount of the Maximum Total Remediation through either Incentive Payment A, or Incentive Payments B, C, and D with Incentive Payment D at a value of 6%.
   - All annual and total figures for Maximum Total Remediation and Maximum Overall Total may never be exceeded with the sole and exclusive exception of the annual amounts for Years 6-10, which may increase based on Incentive Payment D as set forth in Exhibit M-2 when Incentive Payment C is not earned in full. Any such increases must be offset in full by corresponding reductions to Incentive Payment C in prior Payment Years and the same Payment Year for that Settling State, resulting in zero increase to the total Maximum Total Remediation amount ($4,279,160,837) and the total Maximum Overall Total amount ($4,904,201,178).
   - Exhibit M-2 shows maximums based on Incentive Payment D values higher than 6%.
   - The figures are subject to reduction as set forth in the Agreement.

6. Any offsets for Eligible States that are Non-Settling States would be deducted from Maximum Base Payment, Maximum Incentive Payment A, Maximum Incentive Payment B, Maximum Incentive Payment C, Maximum Incentive Payment D, and Maximum Total Remediation by

subtracting from all annual and total payments the amount of the payment times the Overall Allocation Percentage assigned to each Non-Settling State in Exhibit F-2.

EXHIBIT M-2: INCENTIVE D PAYMENT RANGE SCHEDULE

Payment Year	Incentive Payment D (6%-15%)		Total Remediation	
	Maximum if All Eligible States Obtain Incentive D at 6%	Maximum if All Eligible States Obtain Incentive D at 15%	Maximum if All Eligible States Obtain Full Potential with Incentive D at 6%	Maximum if All Eligible States Obtain Full Potential with Incentive D at 14.4%
Year 6 June 30, 2028	$51,349,930	$128,374,825	$487,556,936	$518,314,175
Year 7 June 30, 2029	$51,349,930	$128,374,825	$463,198,419	$496,395,480
Year 8 June 30, 2030	$51,349,930	$128,374,825	$438,839,901	$474,476,784
Year 9 June 30, 2031	$51,349,930	$128,374,825	$438,453,320	$474,128,924
Year 10 June 30, 2032	$51,349,930	$128,374,826	$438,453,320	$474,128,924
Total (Years 1-10)	**$256,749,650**	**$641,874,126**	**$4,279,160,837**	**$4,279,160,837**

NOTES:

1. The ranges for Incentive Payment D show the amount earned based on all Settling States obtaining its minimum value of 6% and its maximum value of 15%, and reflect the following:
   - An assumption that all Eligible States are Settling States.
   - An assumption that all Settling States qualify for Incentive Payment D.
   - The high end of the annual and total ranges for Incentive Payment D may never be exceeded and assume that all Settling States earn the full amount of the Total Remediation that they are eligible to receive by achieving, among other incentives, Incentive Payment D at a value of 14.4%. (The Incentive Payment C and Incentive Payment D payment tables do not allow Settling States earning Incentive Payment D at a value of 15% to earn their full potential amount of the Total Remediation.)
   - Any increase above the low end of the annual and total ranges for Incentive Payment D must be offset in full by corresponding reductions to Incentive Payment C in prior Payment Years and the same Payment Year, resulting in zero increase to the total Maximum Total Remediation amount ($4,279,160,837) and the total Maximum Overall Total amount ($4,904,201,178).

- The total Maximum Total Remediation amount ($4,279,160,837) and total Maximum Overall Total amount ($4,904,201,178) may never be exceeded and do not change regardless if all Settling States earn their full potential amount of the total Maximum Total Remediation through Incentive Payment D at a value of 6% or at a value of 14.4%.
- The amounts are subject to reduction as set forth in the Agreement.

2. All ranges for Total Remediation payments reflect the following:
   - The credit amount of $117,882,400 for prior settlements has already been applied.
   - An assumption that all Eligible States are Settling States.
   - The low end of the ranges assume that all Settling States earn their full potential amount of the Total Remediation through 100 percent of Incentive Payment B, 100 percent of Incentive Payment C, and thus Incentive Payment D at a value of 6%.
   - The high end of the annual ranges may never be exceeded and assume that all Settling States earn the full amount of the Total Remediation that they are eligible to receive by achieving, among other incentives, Incentive Payment D at a value of 14.4%. (The Incentive Payment C and Incentive Payment D payment tables do not allow Settling States earning Incentive Payment D at a value of 15% to earn their full potential amount of the Total Remediation.)
   - Any increase above the low end of the annual ranges must be offset in full by corresponding reductions to Incentive Payment C in prior Payment Years and the same Payment Year, resulting in zero increase to the total Maximum Total Remediation amount ($4,279,160,837) and the total Maximum Overall Total amount ($4,904,201,178).
   - The total Maximum Total Remediation amount ($4,279,160,837) and total Maximum Overall Total amount ($4,904,201,178) may never be exceeded and do not change regardless if all Settling States earn their full potential amount of the total Maximum Total Remediation through Incentive Payment D at a value of 6% or at a value of 14.4%.
   - The amounts are subject to reduction as set forth in the Agreement.

3. Any offsets for Eligible States that are Non-Settling States would be deducted from the Incentive Payment D and Total Remediation by subtracting from all payments the amount of the payment times the Overall Allocation Percentage assigned to each Non-Settling State in Exhibit F-2.

EXHIBIT M-3: PAYMENT SCHEDULE FOR FEE FUNDS, COST FUNDS AND ADDITIONAL REMEDIATION
(Breakdown of Second Column in Exhibit M-1)

Payment Year	Maximum Exhibit R Attorney Fee Funds	Exhibit R Attorney Cost Funds	Common Benefit Fee on Credits	State Cost Fund	Maximum State Outside Counsel Fee Fund	Maximum Additional Remediation Amount	Maximum Total (Shown in Ex. M-1, 2nd Column)
Year 1 June 30, 2023	$91,298,571	$15,000,000	$1,914,750	$9,509,246	$3,803,699	$3,803,698	$125,329,964
Year 2 June 30, 2024	$80,678,256	$15,000,000	$1,182,179	$9,509,246	$3,803,698	$3,803,699	$113,977,078
Year 3 June 30, 2025	$109,546,373	---	$1,914,750	$9,509,247	$3,803,698	$3,803,698	$128,577,766
Year 4 June 30, 2026	$109,546,372	---	$1,914,750	---	$8,558,322	$8,558,322	$128,577,766
Year 5 June 30, 2027	$109,546,372	---	$1,914,751	---	$8,558,322	$8,558,322	$128,577,767
Total	**$500,615,944**	**$30,000,000**	**$8,841,180**	**$28,527,739**	**$28,527,739**	**$28,527,739**	**$625,040,341**

EXHIBIT N

Additional Remediation Amount Allocation Percentages

Alabama	2.0094047523%
American Samoa	0.0215590674%
Arizona	2.9911870812%
California	12.4923284542%
Colorado	2.0922099886%
Connecticut	1.6290775863%
District of Columbia	0.2266153628%
Georgia	3.5107212404%
Guam	0.0604844794%
Hawaii	0.4087756176%
Idaho	0.6193769970%
Illinois	4.1882957440%
Indiana	2.7913607538%
Iowa	0.9341820978%
Kansas	0.9872591950%
Louisiana	1.8447419766%
Maine	0.6664875621%
Maryland	2.6575348718%
Massachusetts	2.9005058228%
Minnesota	1.6334209688%
Missouri	2.5253744735%
Montana	0.3935393398%
N. Mariana Islands	0.0210349545%
Nebraska	0.5252526469%
New Jersey	3.4690785339%
New York	6.7872003052%
North Carolina	4.0924962523%
North Dakota	0.2140841267%
Ohio	5.4856657801%
Oklahoma	1.9292810204%
Oregon	1.7302239375%
Pennsylvania	5.7772011360%
Rhode Island	0.5622563667%
South Carolina	1.9381920268%
Tennessee	3.3847318704%
Texas	7.9239877394%

Vermont	0.3204352512%
Virgin Islands	0.0397474619%
Virginia	2.8709652916%
Washington	2.9198056809%
Wisconsin	2.2138760297%
Wyoming	0.2100401547%

EXHIBIT O

Adoption of a State-Subdivision Agreement

A State-Subdivision Agreement shall be applied if it meets the requirements of Section V and is approved by the State and by the State's Subdivisions as follows:

1. *Requirements for Approval*. A State-Subdivision Agreement shall be deemed as agreed to when it has been approved by the State and either (a) Subdivisions whose aggregate "Population Percentages," determined as set forth below, total more than sixty percent (60%), or (b) Subdivisions whose aggregate Population Percentages total more than fifty percent (50%) provided that these Subdivisions also represent fifteen percent (15%) or more of the State's counties or parishes (or, in the case of Settling States whose counties and parishes do not function as local governments, 15% of or more of the Settling State's non-county Subdivisions), by number.

2. *Approval Authority*. Approval by the State shall be by the Attorney General. Approval by a Subdivision shall be by the appropriate official or legislative body pursuant to the required procedures for that Subdivision to agree to a legally binding settlement.

3. *Population Percentage Calculation*. For purposes of this Exhibit O only, Population Percentages shall be determined as follows: For States with functional counties or parishes[1] the Population Percentage of each county or parish shall be deemed to be equal to (a) (1) two hundred percent (200%) of the population of such county or parish, minus (2) the aggregate population of all Primary Incorporated Municipalities located in such county or parish, divided by (b) two hundred percent (200%) of the State's population. A "*Primary Incorporated Municipality*" means a city, town, village or other municipality incorporated under applicable state law with a population of at least 25,000 that is not located within another incorporated municipality. The Population Percentage of each Primary Incorporated Municipality shall be equal to its population (including the population of any incorporated or unincorporated municipality located therein) divided by two hundred percent (200%) of the State's population; provided that the Population Percentage of a Primary Incorporated Municipality that is not located within a county shall be equal to two hundred percent (200%) of its population (including the population of any incorporated or unincorporated municipality located therein) divided by two hundred percent (200%) of the State's population. For all States that do not have functional counties or parishes, the Population Percentage of each non-county Subdivision (including any incorporated or unincorporated municipality located therein), shall be equal to its population divided by the State's population.

4. *Preexisting Agreements and Statutory Provisions*. A State may include with the notice to its Subdivisions an existing agreement, a proposed agreement, or statutory provisions regarding the distribution and use of settlement funds and have the acceptance of such an agreement or

[1] Certain states do not have counties or parishes that have functional governments, including Alaska, Connecticut, Massachusetts, Rhode Island, and Vermont.

statutory provision be part of the requirements to be an Initial Participating Subdivision.

5. *Revised Agreements*. A State-Subdivision Agreement that has been revised, supplemented, or refined shall be applied if it meets the requirements of Section V and is approved by the State and by the State's Subdivisions pursuant to the terms above.

EXHIBIT P

CVS Pharmacy Inc. Injunctive Terms

I. INTRODUCTION

1. Except where these Injunctive Terms specify a different implementation period, CVS Pharmacy, Inc. ("Settling Pharmacy") shall implement the Injunctive Terms set forth below in Sections II through XVII by the Injunctive Terms Implementation Date (defined below).

2. To the extent that Settling Pharmacy already have in place positions, committees, departments, policies or programs that satisfy the Injunctive Terms, no re-naming or other change is required by these Injunctive Terms.

3. Overview

    a. Settling Pharmacy will implement or maintain a Controlled Substance Dispensing Oversight Program ("CSDOP").

    b. The CSDOP must include written standard operating procedures and/or corporate policies (the "CSDOP Policies and Procedures") required by these Injunctive Terms.

    c. The CSDOP shall apply during the term of these Injunctive Terms, to each of Settling Pharmacy's retail pharmacy stores that dispense Schedule II Designated Controlled Substances and are registered or licensed with each Settling State.

    d. Settling Pharmacy shall provide a copy of the relevant CSDOP Policies and Procedures to each Settling State within 60 days of the Injunctive Terms Implementation Date. To the extent any implementation is expected to require additional time, the Parties agree to work together in good faith to establish a timeline for implementation. No later than 30 days after the Injunctive Terms Implementation Date, each Settling State shall identify the person or office to whom Settling Pharmacy must provide a copy of the relevant CSDOP Policies and Procedures and any other State-specific reporting required under these Injunctive Terms.

    e. Settling States shall form the States Injunctive Relief Committee to serve as a point of contact for Settling Pharmacy and to perform such other roles as set forth herein. Upon the committee's formation, Settling States shall provide notice to Settling Pharmacy of the members of the committee.

4. Compliance with Laws

   a. Each Settling Pharmacy acknowledges and agrees that its pharmacies must comply with applicable state and federal laws, regulations, and rules, including those regarding the dispensing of Controlled Substances. The requirements of these Injunctive Terms are in addition to, and not in lieu of, any other requirements of federal, state, or local law. Nothing in the Injunctive Terms shall be construed as relieving the Settling Pharmacy of the obligation of their pharmacies to comply with all federal, state and local laws, regulations or rules, nor shall any of the provisions of the Injunctive Terms be deemed as permission for Settling Pharmacy to engage in any acts or practices prohibited by such laws, regulations or rules.

   b. The Injunctive Terms are not intended to and shall not be interpreted to prevent Settling Pharmacy from taking or implementing any other compliance or policy steps that are more restrictive or that are necessary to conform with federal, state, or local legal requirements, unless such steps would conflict with State or local law. The Injunctive Terms are not intended to and shall not be interpreted to require Settling Pharmacy to inventory any Controlled Substances or any particular Controlled Substances or to require dispensing of any Controlled Substances or of any individual, types, subsets or categories of Controlled Substances prescriptions.

   c. In the event that a Settling Pharmacy determines that there may be a conflict between the Injunctive Terms and the express requirements of federal, state, or local laws, or interpretations of such laws articulated by an agency responsible for enforcing such laws or a court ("Express Interpretations"), such that the Settling Pharmacy determines that it cannot comply with the Injunctive Terms without violating these express requirements or Express Interpretations, Settling Pharmacy shall follow the express requirements of the federal, state or local law or Express Interpretation thereof and shall provide notice to the Settling State(s). Within thirty (30) days after receipt of a notification from a Settling Pharmacy referenced above, the Settling Pharmacy and the State shall meet and discuss the potential conflict, and the Settling Pharmacy shall comply with any reasonable requests from the Settling State as necessary to determine whether there is a conflict between the Injunctive Terms and the express requirements of federal, state, or local laws, or Express Interpretations. In the event that a Settling Pharmacy believes a court or administrative action brought by a governmental body in a Settling State has commenced against it or its pharmacists for actions required by the Injunctive Terms, then the Settling Pharmacy may notify the Attorney General of the Settling State of such pending action. If the State agrees that the court or administrative action is a result of actions required by the Injunctive Terms, the State will engage in best efforts to resolve the conflict or assist in achieving resolution of the court or

administrative action. Nothing in this paragraph shall (i) limit the right of the Settling State to disagree with a Settling Pharmacy as to the conflict; (ii) be deemed to relieve a Settling Pharmacy from following any subsequently enacted law or regulation, or judicial decisions from a regulatory authority with jurisdiction over controlled substances that is more restrictive than the provisions of the Injunctive Terms; (iii) or from following the Injunctive Terms if they are more restrictive than applicable laws at issue in the administrative action if there is no conflict; (iv) be deemed to relieve a Settling Pharmacy from adhering to the outcome of a court or administrative determination that there is no conflict; or (v) limit a Settling State's ability to relieve a Settling Pharmacy of a duty under these Injunctive Terms if that Settling State determines that that term is in conflict with that Settling State's express legal requirements.

d. A Settling Pharmacy shall retain all records it is required to create pursuant to its obligations hereunder for a period no shorter than three years, unless otherwise specified. Nothing in these Injunctive Terms shall prevent a Settling State from issuing a lawful subpoena or Civil Investigative Demand (CID) for records pursuant to an applicable law.

5. No Admission and No Use as Evidence. Settling Pharmacy do not admit liability or wrongdoing. These Injunctive Terms shall not be considered, construed, or represented to be (1) an admission, concession, or evidence of liability, wrongdoing, or the existence of any legal obligations or requirements other than the requirement to follow these Injunctive Terms, (2) an admission, concession or evidence of the reach, requirements, meaning or interpretation of any statute or regulation, or (3) a waiver or limitation of any defense otherwise available to Settling Pharmacy. These Injunctive Terms shall not be offered or received in evidence or otherwise relied on in any action or proceeding for any purpose other than in an action or proceeding to modify or enforce or monitor compliance with these Injunctive Terms.

II. TERM AND SCOPE

1. The term of these Injunctive Terms shall be from the Injunctive Terms Implementation Date until August 15, 2032, unless otherwise specified herein.

2. Except as otherwise stated herein, the Injunctive Terms shall apply to Settling Pharmacy's retail pharmacy stores located in, and registered or licensed with, each Settling State that dispense Schedule II Designated Controlled Substances to Patients, including any Schedule II Designated Controlled Substances dispensed by any such retail pharmacy stores that are mailed or shipped to patients in a Settling State. Should Settling Pharmacy operate an online pharmacy that is registered or licensed to dispense Schedule II Designated Controlled Substances in any Settling State while these

Injunctive Terms are in effect, the Injunctive Terms shall apply to such pharmacy as well.[1]

3. This agreement may be amended by mutual agreement of a majority of the States Injunctive Relief Committee and Settling Pharmacy. Any such amendments must be in writing.

III. DEFINITIONS

1. The term "Distributor Injunctive Terms" means Exhibit P of the Settlement Agreement, dated as of July 21, 2021, between McKesson Corporation, Cardinal Health, Inc., and AmerisourceBergen Corporation and certain States and subdivisions.

2. The term "Block" means an action taken by Settling Pharmacy preventing or otherwise prohibiting any Settling Pharmacy pharmacist from filling prescriptions for Controlled Substances from a specific identified Prescriber.

3. The term "Clearinghouse" means the system established by Section XVII of the Distributor Injunctive Terms.

4. The term "Clearinghouse Advisory Panel" is as defined in Section XVII.B.4 of the Distributor Injunctive Terms.

5. The term "Controlled Substances" means those substances designated under schedules II-V pursuant to the federal Controlled Substances Act.

6. The term "Designated Controlled Substances" shall be limited to: (a) oxycodone; (b) hydrocodone; (c) hydromorphone; (d); tramadol; (e) oxymorphone; (f) morphine; (g) methadone; and (h) fentanyl.

7. The term "Injunctive Terms Implementation Date" means 30 days after the Effective Date of the Settlement Agreement [as defined in Section TK of the full Agreement].

8. The term "National Arbitration Panel" is defined in Section TK of [title of full Agreement].

9. The term "Patient" means any individual who receives a prescription for a Designated Controlled Substance from a Prescriber, whether legally valid or not, and attempts to fill it at one of a Settling Pharmacy's retail pharmacy stores in a Settling State.

10. The term "Prescriber" means any individual that has written a prescription for a Designated Controlled Substance, whether legally valid or not, that is presented to a Settling Pharmacy in a Settling State.

[1] Caremark specialty and mail order pharmacies are not subject to, and are not online pharmacies for purposes of, these Injunctive Terms.

11. The term "Red Flag(s)" means the enumerated Patient Red Flags, Prescription Red Flags, and Prescriber Red Flags set out in Section IX.

12. The term "Settling State(s)" means each State that is a signatory to [Title of Full Agreement].

13. The term "States Injunctive Relief Committee" means a committee representing the Settling States composed of between four and eight members designated by the Settling States. The members of the States Injunctive Relief Committee shall be employees of a Settling State's Office of Attorney General and/or employees of another agency of a Settling State and may not include special assistant attorneys general, contractors, outside counsel, or other non-employees delegated official functions.

IV. CONTROLLED SUBSTANCE OVERSIGHT PERSONNEL

1. Settling Pharmacy shall designate a Chief Pharmacy Controlled Substances Officer, or other appropriately titled position, to be a member of the Controlled Substance Oversight Committee (described below in Section VI), and to oversee a Controlled Substance Professional Practices Department and Settling Pharmacy's compliance with 21 C.F.R. 1306.04 and these Injunctive Terms. As used in these Injunctive Terms, the terms "Controlled Substance Oversight Committee" and "Controlled Substance Professional Practices Department" refer to the entity or entities, however titled, that carry out the functions required by these Injunctive Terms. Notwithstanding the preceding sentence, to the extent an existing position, committee or department carries out the functions required by these Injunctive Terms, any other functions undertaken by such position, committee or department shall not be subject to these Injunctive Terms or oversight by the Settling States pursuant to these Injunctive Terms. The position, committee and department discussed in these Terms may bear different names and need not be limited to the roles and functions set forth herein.

2. The Chief Pharmacy Controlled Substances Officer shall have knowledge of and experience with the laws and regulation of Controlled Substances, in particular the regulations in 21 C.F.R. 1306.04.

3. The Chief Pharmacy Controlled Substances Officer shall provide at least quarterly reports to the Controlled Substance Oversight Committee (described below in Section VI) regarding Settling Pharmacy's compliance with these Injunctive Terms, including the implementation of any changes to the CSDOP Policies and Procedures required by these Injunctive Terms.

4. Staffing levels of Settling Pharmacy's Controlled Substance Professional Practices Department shall be reviewed periodically, but at least on an annual basis, by Settling Pharmacy's Controlled Substance Oversight Committee to assess whether such staffing levels are sufficient for the Controlled Substance Professional Practices Department to comply with this Agreement. This review shall include consideration of relevant developments in technology, law, and regulations.

5. Throughout the term of these Injunctive Terms, Settling Pharmacy shall maintain a telephone and electronic submission hotline(s) (the "Hotline") to permit employees and/or Patients and/or members of the public to anonymously report suspected inappropriate or illegitimate dispensing, prescribing or diversion of Designated Controlled Substances, violations of the CSDOP Policies and Procedures, these Injunctive Terms, Settling Pharmacy's company policy, or other applicable law. The Hotline may be implemented by adding a dedicated option to existing systems that includes reporting regarding Designated Controlled Substances. Settling Pharmacy shall publish their Hotline contact information to its employees and Patients in the Settling States. Settling Pharmacy shall maintain for the duration of Injunctive Terms a record of each complaint made to the Hotline regarding Designated Controlled Substances and documentation regarding any investigation or response to such complaints. Nothing herein shall require Settling Pharmacy to investigate a pharmacist's professional judgment to refuse a prescription that the pharmacist believes was prescribed or is being used for other than a legitimate medical purpose or that the pharmacist believes was not prescribed by an individual Prescriber acting in the usual course of his or her professional practice.

V. INDEPENDENCE

1. Settling Pharmacy's Controlled Substance Professional Practices Department personnel, pharmacists and pharmacist technicians who work at Settling Pharmacy's pharmacies within the Settling States, and field personnel who supervise pharmacists and pharmacist technicians (together, "CSDOP Employees"), shall not be compensated in whole or in part by commissions, bonuses, incentives or any other monetary or non-pecuniary benefit that depends in material part on revenue or profitability targets or expectations to sales of Controlled Substances. Nothing in these Injunctive Terms shall be interpreted to prevent compensation of employees based on sales volume, revenue or profitability targets/expectations for enterprise-, store-, or pharmacy-wide sales that include Controlled Substances.

2. No CSDOP Employees may be terminated, suspended, threatened with or face any other negative employment consequence for failing to meet any revenue or profitability targets or expectations that depends in material part on sales of Controlled Substances. Nothing in these Injunctive Terms shall be interpreted to prevent Settling Pharmacy from taking employment action based on sales volume, revenue or profitability targets/expectations for enterprise-, store-, or pharmacy-wide sales that include Controlled Substances.

3. Personnel in Settling Pharmacy's Controlled Substance Professional Practices Department shall not report to Settling Pharmacy's sales, marketing, or business development departments, and sales, marketing, or business development departments shall not be authorized to make decisions regarding the promotion, compensation, demotion, admonition, discipline, commendation, periodic performance reviews, hiring, or firing of Controlled Substance Professional Practices Department personnel.

This provision does not apply to an officer or executive to whom both the Controlled Substance Professional Practices Department and sales, marketing and/or business development departments report.

4. Settling Pharmacy's sales, marketing and business development departments are prohibited from interfering with, obstructing, or otherwise exerting control over any Controlled Substance Professional Practices Department or Controlled Substance Committee decision-making. This provision does not apply to an officer or executive to whom both the Controlled Substance Professional Practices Department and sales, marketing and/or business development departments report.

5. To the extent necessary to comply with this section, a Settling Pharmacy's Controlled Substance Oversight Committee shall review, modify, and direct any changes to any compensation and non-retaliation policies specific to the sale or dispensing of Designated Controlled Substances.

VI. OVERSIGHT

1. To the extent not already established, within thirty (30) business days of the Injunctive Terms Implementation Date, each Settling Pharmacy shall establish an oversight committee, however titled, that includes representatives from its respective legal, compliance, pharmacy operations and asset protection departments, however named, to provide oversight over the CSDOP and its compliance with the Injunctive Terms. For the purposes of reference herein, this committee, however named, shall be referred to as the "Controlled Substance Oversight Committee." Settling Pharmacy shall maintain its Controlled Substance Oversight Committee for the duration of the term of the Injunctive Terms. The Chief Pharmacy Controlled Substances Officer shall be a member of the Controlled Substance Oversight Committee.

2. A Settling Pharmacy's Controlled Substance Oversight Committee shall have quarterly meetings during which the Chief Pharmacy Controlled Substances Officer shall report on, and the Controlled Substance Oversight Committee shall review, among other things, (a) the Prescription Validation Process, including the CSDOP Policies and Procedures on identifying and resolving Patient, Prescriber and Prescription Red Flags; (b) the training required under the Injunctive Terms; (c) proactive due diligence and site visits; (d) the Prescriber Review Processes; (e) significant new national and regional diversion trends involving Controlled Substances; (f) Settling Pharmacy's adherence to the Injunctive Terms and applicable laws and regulations; and (g) any technology, staffing, or other resource needs for the CSDOP. The Controlled Substance Oversight Committee shall have access to all CSDOP reports described in the following subsection.

3. On an annual basis, a Settling Pharmacy's Controlled Substance Oversight Committee shall provide a written report to the President of the Settling Pharmacy's Retail Division, the Chief Financial Officer of the Settlement Pharmacy's Retail Division, the Chief Legal Officer of the Settling Pharmacy's Retail Division, and the CVS Health

Chief Compliance Officer, outlining (a) the Settling Pharmacy's adherence to, and any material deviations from these Injunctive Terms; (b) the allocation of resources sufficient to comply with these Injunctive Terms; and (c) any revisions to the CSDOP that the Controlled Substance Oversight Committee has approved. The CVS Health Chief Compliance Officer shall determine if and when it is appropriate to make a report to the Board or any subcommittee thereof, but shall report at least annually.

4. Settling Pharmacy, through its Controlled Substance Professional Practices Department and Oversight Committee, shall, at least once every year, review and oversee any enhancements to the CSDOP Policies and Procedures and systems for dispensing activity that the Controlled Substance Oversight Committee deems necessary.

5. The Controlled Substance Oversight Committee shall be responsible for the approval of all material revisions to the CSDOP Policies and Procedures, provided that nothing herein shall prevent Settling Pharmacy from implementing changes to the CSDOP Policies and Procedures pending such review and approval.

VII. MANDATORY TRAINING

1. The CSDOP Policies and Procedures shall be published in a form and location readily accessible to all pharmacy personnel at each of the Settling Pharmacy's retail pharmacy locations in the Settling States. Online availability is sufficient, so long as pharmacy personnel have access to a computer with access to the CSDOP Policies and Procedures.

2. Settling Pharmacy shall launch training for all existing CSDOP Employees, to the extent practical (for example, accounting for employee leave), on the CSDOP Policies and Procedures required under these Injunctive Terms, including the Prescription Validation Process and corresponding responsibility. The training shall be launched within 120 days of the Injunctive Terms Implementation Date. All CSDOP Employee new hires, to the extent practical, shall be required to participate in such trainings within 60 days of hiring or 6 months of the Injunctive Terms Implementation Date, whichever is later. Settling Pharmacy will further require that every CSDOP Employee, to the extent practical, receive such training at least once every 3 years for the term of these Injunctive Terms.

3. On an annual basis for the duration of these Injunctive Terms, Settling Pharmacy shall test their CSDOP Employees on their knowledge regarding the CSDOP Policies and Procedures required under these Injunctive Terms, including the Prescription Validation Process and corresponding responsibility.

4. It shall be a part of the CSDOP Policies and Procedures and all trainings of all CSDOP Employees required under these Injunctive Terms that pharmacists shall refuse to dispense Controlled Substances that they believe were prescribed or are being used for other than a legitimate medical purpose or that they believe were not prescribed by an individual Prescriber acting in the usual course of his or her professional practice.

5. All trainings required under these Injunctive Terms shall also make clear that i) Settling Pharmacy's compensation and non-retaliation policies, including pursuant to these Injunctive Terms, prevent CSDOP Employees from being compensated or penalized in any way related to revenue or profitability targets or expectations specific to sales of Controlled Substances; and ii) pharmacists will not be penalized in any way for exercising their professional judgment to refuse to fill prescriptions for Controlled Substances pursuant to their corresponding responsibility. To the extent that trainings designed and launched prior to the Effective Date of these Injunctive Terms do not reference these policies, they shall be added by the end of 2023.

VIII. THE PRESCRIPTION VALIDATION PROCESS

1. As part of its CSDOP, Settling Pharmacy shall maintain a Prescription Validation Process in the CSDOP Policies and Procedures, as further described and set forth in this section, that each pharmacist employed by Settling Pharmacy in a Settling State must follow when dispensing a prescription for a Controlled Substance. The inclusion of an enumerated Red Flag in these Injunctive Terms shall not be considered, construed, or represented to be an admission, concession, or evidence of any factual or legal contention related to such Red Flag. A Red Flag shall not be interpreted to mean that a prescription is, or is more likely than not, illegitimate and/or not issued in the usual course of professional practice or treatment.

2. A Red Flag will be considered "resolved" if, after further investigation as described below, and given other facts and circumstances surrounding the prescription, a pharmacist determines, in his or her professional judgment, that the facts that triggered the Red Flag do not lead him or her to believe that the prescription was written or is being submitted for an illegitimate medical purpose or outside the usual course of a Prescriber's professional practice.

3. A Settling Pharmacy's CSDOP Policies and Procedures shall provide that if a pharmacist identifies any "Patient Red Flags" associated with a Controlled Substances prescription (described in Section IX(3) below), before filling the prescription the pharmacist must resolve them; and that the method of resolution falls within the judgment of the pharmacist and may include reviewing the Patient's profile and history with the Settling Pharmacy, calling the Prescriber or Prescribers if appropriate, speaking with the Patient if appropriate, calling on the pharmacist's pre-existing knowledge of the Patient or Prescriber, reviewing available Prescription Monitoring Program ("PMP" or "PDMP") data, and/or reviewing other data or information

available to the pharmacist.

4. Each Settling Pharmacy's CSDOP Policies and Procedures shall provide that if forgery or fraud is suspected, or if the pharmacist identifies any other "Prescription Red Flags" associated with a Controlled Substances prescription (described in Section IX(4) below), the pharmacist must resolve the Prescription Red Flags before filling the prescription; and that the method of resolution falls within the judgment of the pharmacist and may include reviewing the Patient's profile and history with the Settling Pharmacy, calling the Prescriber or Prescribers if appropriate, speaking with the Patient if appropriate, calling on the pharmacist's pre-existing knowledge of the Patient or Prescriber, reviewing available PMP or PDMP data, and/or reviewing other data or information available to the pharmacist.

5. Settling Pharmacy's CSDOP Policies and Procedures shall require that if a pharmacist identifies any "Prescriber Red Flags" associated with a Controlled Substances prescription (described in Section IX(5) below), the pharmacist must resolve them before filling the prescription; and that the method of resolution falls within the judgment of the pharmacist and may include reviewing any Settling Pharmacy records regarding the Prescriber, calling the Prescriber if appropriate, speaking with the Patient if appropriate, calling on the pharmacist's pre-existing knowledge of the Patient or Prescriber, reviewing available PMP or PDMP data, and/or reviewing other data or information available to the Settling Pharmacy.

6. A Settling Pharmacy's CSDOP Policies and Procedures shall provide that the resolution of all Red Flags identified by the pharmacist, as well as sufficient details to reflect the steps taken to resolve the Red Flags must be documented by the pharmacist. Any such records shall be maintained for the duration of these Injunctive Terms. To the extent that a Red Flag is resolved based upon facts or circumstances that are already reflected or documented in a Settling Pharmacy's records, further documentation of those facts or circumstances is not required for resolution of substantially the same Red Flag on subsequent prescriptions. For example, if a Patient lives 55 miles from a Settling Pharmacy but works near the pharmacy and that fact is reflected in pharmacy records, no documentation for the resolution of the Red Flag addressing the Patient's distance from the pharmacy is required in connection with individual prescriptions dispensed for that Patient. A lack of documentation does not create a presumption that a pharmacist did not resolve any identified Red Flags.

7. Settling Pharmacy's CSDOP Policies and Procedures shall provide that, even if all Red Flags are resolved, a pharmacist shall reject a prescription if, in his or her professional judgment, he or she believes that it was written or is being submitted for other than a legitimate medical purpose and/or was written outside the usual course of an individual Prescriber's professional practice.

IX. RED FLAGS

1. Settling Pharmacy shall provide quarterly to the Settling States, beginning with an initial report four months after the Injunctive Terms Implementation Date, and quarterly thereafter, (1) data reports (the "Quarterly Data Reports") for each retail pharmacy operated by Settling Pharmacy containing data generated by the periodic proactive compliance reviews set forth in Section XI.1, subject to any potential modifications as a result of the meet and confer process set forth in Section IX.2, on cash, high MME patients, and cocktail prescriptions consistent with the sample report provided by Settling Pharmacy on November 21, 2022, (2) the top twenty-five prescribers of Designated Controlled Substances in each Settling State from CVS's retail dispensing data, and (3) the lists of prescribers subject to disclosure in section X.5. Each Settling State shall provide contact information for receipt of the above information and shall update such contact information as necessary. A Settling State shall not disclose or provide any data provided under this provision during or after the Term of these Injunctive Terms unless required to do so by law or in a proceeding to enforce these Injunctive Terms. If a Settling State receives a request, demand or subpoena for such information or data, or intends to produce said data in a proceeding to enforce these Injunctive Terms, the Settling State shall, before producing any information or data, provide to Settling Pharmacy no less than ten (10) days' notice, unless a shorter period is required by law, and an opportunity to object, seek a protective order, or come to an agreement on confidentiality protections, prior to the expiration of the 10-day notice period. It is CVS's position that the information and data to be provided under these Injunctive Terms is confidential in nature, shall not be disclosed or produced by a Settling State, and is exempted from public record requests under exemptions for confidential commercial information and all other applicable exemptions and exclusions. Nothing in this paragraph shall be deemed to prevent a Settling State from sharing this material with other State or federal law enforcement agencies, provided that such agencies acknowledge and comply with the nondisclosure and notice obligations set forth in the preceding sentences.

2. Within the three months following the provision of the Annual Data Reports, either Settling Pharmacy or the States Injunctive Relief Committee may propose in writing a meet and confer to discuss potential changes to the scope of one or more categories of Red Flags. At such a meeting, Settling Pharmacy or the States Injunctive Relief Committee may provide additional research, information or data available to them beyond that provided in the Annual Data Reports. For example, a Settling Pharmacy might propose reducing the threshold for triggering a particular category of Red Flag or consolidating certain Red Flags or subcategories of Red Flags into a single metric, or the States Injunctive Relief Committee might propose increasing the threshold for triggering a particular Red Flag or expanding that Red Flag to include multiple subcategories (*e.g.*, number of prescriptions, distance thresholds).

a. If Settling Pharmacy and the States Injunctive Relief Committee agree on such changes to one or more Red Flags, they shall document those changes in writing and they shall become a part of these Injunctive Terms for all intents and purposes.

b. If Settling Pharmacy and the States Injunctive Relief Committee cannot agree on the proposed changes during their meeting and confer, the Party seeking the change(s) to the Red Flag(s) may seek a 5-day mediation of the issue at its own expense. If the mediation fails to resolve the dispute between the parties, the party seeking the proposed change(s) may appeal to the National Arbitration Panel to have the National Arbitration Panel modify the Red Flags on the basis that the change(s) would be consistent both with avoiding unnecessary material costs of identifying and resolving Red Flags and materially reducing the diversion of Controlled Substances. In such a proceeding, the Party seeking the proposed change(s) may provide evidence from Annual Data Reports or from other research, data and information.

c. In any such proceedings, there shall be a presumption against imposition of any proposed Red Flags, or proposed modifications to pre-existing Red Flags, that have not been identified by the United States Drug Enforcement Administration or any Settling State's Board of Pharmacy or other Controlled Substance government regulators.

d. The Red Flags required by these Injunctive Terms shall at no point be too numerous or complex to be reasonably workable for pharmacists in the context of protecting patient safety, performing corresponding responsibility, drug utilization review, and their other responsibilities. Any dispute over whether the Red Flags required by these Injunctive Terms have become too numerous or complex to be reasonably workable for pharmacists shall be submitted to the National Arbitration Panel. In the event such a dispute is submitted to the National Arbitration Panel, it shall be the Settling Pharmacy's burden to prove that the Red Flag(s) at issue are too numerous or complex to be reasonably workable for pharmacists. The Arbitration Panel should consider information regarding potential impacts on public health in determining if the red flag(s) at issue are too numerous or complex to be reasonably workable for pharmacists.

3. Settling Pharmacy's CSDOP Policies and Procedures shall require their pharmacists to treat the following circumstances as "Patient Red Flags":

a. A Patient seeks to fill a Schedule II Designated Controlled Substance prescription more than three days prior to the contemplated exhaustion date of an earlier prescription of the same Schedule II Designated Controlled Substance (e.g., exhaustion of the days' supply assuming the prescription has been taken in accordance with the prescribers' directions on the face of the prescription), provided the previous prescription was also dispensed by the same Settling Pharmacy;

b. A Patient seeks to fill a Designated Controlled Substance prescription from a Prescriber after having filled Designated Controlled Substance prescriptions at the same Settling Pharmacy from more than four other Prescribers, from separate practices, in a given 6-month period;[2]

c. A Patient seeks to fill a Designated Controlled Substance prescription after having filled three other Designated Controlled Substance prescriptions written by multiple Prescribers with overlapping days of supply at the same Settling Pharmacy's pharmacies within 30 days;

d. The distance between a Patient's residence and the Settling Pharmacy receiving the Designated Controlled Substance prescription is farther than 50 miles ;

e. The Patient resides more than 100 miles from the Prescriber who issued the Designated Controlled Substances prescription;

f. To the extent personally known to the pharmacist filling the prescription, a Patient seeks to fill a Designated Controlled Substance prescription after having two other prescriptions for Designated Controlled Substances subjected to refusals to fill by a Settling Pharmacy pharmacist within the past 30 days;

g. A patient pays in cash for a Designated Controlled Substance despite having prescription drug insurance on file for that medication;

h. Three or more Patients come to the pharmacy together to fill prescriptions for the same Designated Controlled Substances;

i. A Patient requests a Designated Controlled Substance by its slang or street description, such as "Mallinckrodt blues," "M's" or "the blue pill"; and

j. A Patient presenting a prescription for a Designated Controlled Substance appears visibly altered, intoxicated or incoherent.

4. Settling Pharmacy's CSDOP Policies and Procedures shall require their pharmacists to treat the following circumstances as "Prescription Red Flags:"

[2] In Settling Pharmacies' sole discretion, for administrative convenience Settling Pharmacies may implement this Red Flag without regard to whether Prescribers are at separate practices, thereby resulting in more instances in which the flag occurs.

a. A Controlled Substance prescription fails to meet the requirements of law;

b. A Controlled Substance prescription that appears altered, including but not limited to, a photocopied prescription or a prescription in which an altering agent, such as white out, was used;

c. A Controlled Substance prescription written with misspellings suggesting the prescription may not have been written by a valid Prescriber;

d. A Controlled Substance prescription using atypical abbreviations suggesting the prescription may not have been written by a valid Prescriber; and

e. A Controlled Substance prescription written with multiple colors of ink or in multiple different handwritings.

5. Settling Pharmacy's CSDOP Policies and Procedures shall require their pharmacists to the following circumstances as "Prescriber Red Flags:"

a. A Prescriber provides a Patient with prescriptions for all three of a Schedule II Designated Controlled Substance, a benzodiazepine, and carisoprodol;

b. A Prescriber has no office within 50 miles of the retail pharmacy store where a Designated Controlled Substance prescription is submitted; and

c. A Prescriber of Designated Controlled Substances uses prescriptions that are preprinted or stamped with drug type and amount.

X. PRESCRIBER REVIEW

1. Settling Pharmacy shall regularly review the prescribing patterns and practices of Prescribers of Designated Controlled Substances (the "Prescriber Review Process"). The Prescriber Review Process shall employ algorithms, or other means, to review data on Settling Pharmacy's retail dispensing for potential Prescribers of concern.

2. Settling Pharmacy shall initiate Prescriber Review Process in the following circumstances:

a. Personnel implementing the Prescriber Review Process become aware that a Prescriber of Designated Controlled Substances located in a Settling State has been the subject of a blanket refusal to fill by one or more of the Settling Pharmacy's retail pharmacy stores in the Settling States;

b. Personnel implementing the Prescriber Review Process become aware that a Prescriber of Designated Controlled Substances located in a Settling State has been charged or indicted with a crime related to prescribing Designated Controlled Substances by the Federal Government or law enforcement in a Settling State; or

c. A Settling Pharmacy has received a Hotline complaint that has been investigated and substantiated concerning a Prescriber's illegitimate prescribing of Designated Controlled Substances.

3. Based on the professional judgment of the employees operating the Prescriber Review Process, a Settling Pharmacy may also initiate the Prescriber Review Process when:

a. Personnel implementing the Prescriber Review Process are notified in writing by law enforcement that a Prescriber of Designated Controlled Substances located in a Settling State is the target of an investigation regarding the prescribing of controlled substances;

b. A Prescriber of Designated Controlled Substances was flagged for review by a Settling Pharmacy pharmacist in a Settling State (other than through a refusal to fill or blanket refusal to fill) or by field personnel who supervise a Settling Pharmacy's pharmacies in a Settling State; or

c. A Prescriber of Designated Controlled Substances located in a Settling State was identified through the running of algorithms on Settling Pharmacy's retail dispensing.

4. Once a Settling Pharmacy identifies a Prescriber for further investigation, the Settling Pharmacy shall review pertinent and available data or information pertaining to the Prescriber, which may include interviews or other information gathered in the discretion of the employees operating the Prescriber Review Process. All data and information collected or created as part of the Prescriber Review Process shall be maintained by the Settling Pharmacy for the term of these Injunctive Terms. When permitted by law, nothing contained in this Section prevents a Settling Pharmacy from taking immediate action to Block a Prescriber.

5. If after the Prescriber Review Process those making the decision have not resolved the circumstances that caused a Settling Pharmacy to further investigate the Prescriber, then the Prescriber shall be Blocked from having Controlled Substance prescriptions filled at the Settling Pharmacy's retail pharmacies in the Settling States, when permitted by law. A Prescriber may have an opportunity at the discretion of the Settling Pharmacy to seek future reinstatement by providing information to the Settling Pharmacy that may resolve its concerns. Nothing in this Section shall limit the right or ability of an individual Settling Pharmacy pharmacists to either refuse to fill a given prescription or refuse to fill all prescriptions for Controlled Substances from a given Prescriber independent of any decision by the Settling Pharmacy to Block or not Block a given Prescriber. On written demand, on a quarterly basis, a Settling Pharmacy shall provide to each Settling State the names and DEA or NPI numbers of Prescribers of Designated Controlled Substances within that Settling State that it has Blocked. Each Settling State shall provide contact information in order to receive such information. For each of the

Settling States, on a quarterly basis, a Settling Pharmacy shall provide to the Injunctive Relief Committee the number, names and DEA or NPI numbers of Prescribers who were: (a) blocked, and the number of prescribers who were (b) reviewed but not blocked.

XI. PROACTIVE DUE DILIGENCE AND SITE VISITS

1. During the term of these Injunctive Terms, Settling Pharmacy shall conduct periodic proactive compliance reviews of its retail pharmacy stores in the Settling States to assist with the identification of potential compliance issues related to the dispensing of Designated Controlled Substances at its retail pharmacy stores in the Settling States. This may be satisfied by the use of algorithms, or other electronic means, to analyze data associated with each pharmacy's dispensing of Designated Controlled Substances to identify particular pharmacies for review as required under this Section XI. Documentation of any resulting reviews shall be maintained by the Settling Pharmacy and made accessible to all Controlled Substance Professional Practices Department personnel upon request for the duration of these Injunctive Terms.

2. During the term of these Injunctive Terms, Settling Pharmacy personnel or qualified third-party compliance consultants shall conduct site visits to each pharmacy identified for further review in a calendar year. Settling Pharmacy shall provide a list of such pharmacies to Settling States on an annual basis. These site visits shall at a minimum consist of a review of Controlled Substance dispensing documentation and recordkeeping; and a review of physical surroundings and other circumstances for any indications of potential non-compliance with these Injunctive Terms or the CSDOP Policies and Procedures, or any violations of other applicable laws and regulations related to the dispensing of Controlled Substances.

3. During site visits, Settling Pharmacy's personnel or qualified third-party compliance consultants shall interview relevant pharmacy employees, if appropriate, about any potential areas or issues of concern, including potential violations of laws related to the dispensing of Controlled Substances, the CSDOP Policies and Procedures, and these Injunctive Terms.

4. A Settling Pharmacy's personnel or qualified third-party compliance consultants who conduct site visits shall complete a report reflecting the findings of any site visit pursuant to this section. This report shall document areas or issues of concern, including potential violations of law related to the dispensing of Controlled Substances, the CSDOP Policies and Procedures, and these Injunctive Terms.

5. The site visit reports described above shall be maintained by the Settling Pharmacy and made accessible to all Controlled Substance Professional Practices Department personnel. Upon its request, the States Injunctive Relief Committee shall be provided

sample reports or a report for a particular store.

XII. THEFT AND LOSS PREVENTION

1. In addition to complying with all theft and loss procedures, policies and precautions required by state and federal law, each Settling Pharmacy shall maintain for at least three years information regarding the receipt and disposition of inventory of all Designated Controlled Substances at each retail pharmacy store.

2. In addition to any other reporting obligations under state and federal law, Settling Pharmacy must provide to each Settling State on a quarterly basis any reports it has made to the Drug Enforcement Administration regarding the theft or significant loss of Designated Controlled Substances in that Settling State pursuant to 21 CFR §1301.76(b). Each Settling State shall provide contact information in order to receive such reports. There shall be no obligation to provide these reports to Settling States that receive contemporaneous reporting of thefts or significant losses of Designated Controlled Substances to a Settling State's board of pharmacy.

XIII. REPORTING TO LAW ENFORCEMENT

1. The Settling States shall inform the Settling Pharmacy to what extent their law enforcement authorities would like to receive reports, other than those already required by law or regulation, of any confirmed forged prescriptions. To the extent not already in place, Settling Pharmacy shall implement standard operating procedures directing its employees to report any confirmed forged prescriptions for Designated Controlled Substances to those Settling States who have indicated that they want to accept it, within 5 business days of completing any review of such prescription or conduct. The Settling States shall provide contact information in order to receive such reports.

2. Settling Pharmacy shall document and for at least 2 years maintain records of any such reports that are made to Settling States regarding confirmed fraudulent or forged prescriptions, which are maintained centrally.

XIV. ENFORCEMENT OF INJUNCTIVE TERMS

1. Notice of Potential Violations and Opportunity to Cure.

    a. A "Potential Violation" occurs when the Settling State determines, after appropriate investigation and due diligence, that a Settling Pharmacy is not in substantial compliance with a material aspect of the Injunctive Terms. A Potential Violation may be for a single retail pharmacy. A violation of this Agreement is not presumed to occur when a pharmacist, pharmacist technician,

or other field personnel who supervise pharmacists and/or pharmacist technicians employed by a Settling Pharmacy violates the Settling Pharmacy's CSDOP Policies and Procedures.

b. Potential Violation Discovered by Settling State.

i. In the event of a Potential Violation identified by a Settling State, the Settling State shall notify the Settling Pharmacy in writing (the "State's Notice").

ii. Within thirty (30) days of receipt of the State's Notice, the Settling Pharmacy shall provide a written response to the Settling State. The response shall include Settling Pharmacy's position as to the act(s) of non-compliance, including, possibly, a statement setting forth why the Settling Pharmacy believes it is in substantial compliance with the relevant provision(s) or a statement explaining how the Potential Violation has been addressed.

iii. If the Settling State wishes to meet with a Settling Pharmacy, that Settling Pharmacy shall promptly make itself available for such a meeting.

c. If, after review of a written response and any meeting, the Settling State believes that a Potential Violation is ongoing or has not been substantially addressed, it will provide written notice to a Settling Pharmacy and work in conjunction with the Settling Pharmacy to devise, within thirty (30) days, a corrective action plan ("Corrective Action Plan") to remedy such Potential Violation, including a reasonable period for implementation of such plan.

d. Within 60 and 120 days after implementing the Corrective Action Plan, the Settling Pharmacy will provide a written compliance update to the Settling State and make itself available to meet with the Settling State if requested. If after reviewing the compliance update and any meeting, the Settling State believes a Potential Violation remains ongoing or has not been substantially addressed, the Settling State may commence a 30-day mediation period. If mediation fails to resolve the dispute between the parties, the Settling State may take whatever action it deems necessary, including but not limited to bringing an action to enforce these Injunctive Terms, filing a new action (administrative or civil action) for violation of the Injunctive Terms as allowed by state law, conducting further investigation, or attempting to negotiate an updated Corrective Action Plan with the Settling Pharmacy. But the Settling State may not seek to reinstate claims that have been released as part of the Settlement.

e. If a Settling Pharmacy fails or refuses to provide a written response, to devise or implement a Corrective Action Plan or to provide a compliance update as required by subsections 1(b), 1(c) and/or 1(d), a Settling State may bring an action to enforce these Injunctive Terms, filing a new action (administrative or civil action) for violation of the Injunctive Terms as allowed by state law, conduct further investigation, or attempt to negotiate an updated Corrective Action Plan with the Settling Pharmacy. But the Settling State may not seek to reinstate claims that have been released as part of the Settlement.

f. If, after review of a written response and any meeting, pursuant to subsections 1b. or 1c., above, the Settling State concludes that a Potential Violation is not ongoing or has been substantially addressed, the Settling State will provide written notice of this conclusion to the Settling Pharmacy within 30 days of reaching its conclusion.

2. Enforcement Action. Each Settling State agrees that prior to taking any court or administrative action, other than an action that the Settling State concludes is necessary to address an immediate threat to the health, safety, or welfare of the citizens of the Settling State, or that a public emergency requiring immediate action exists, it will follow the process outlined above. If the Settling State concludes that action is necessary to address an immediate threat to the health, safety, or welfare of the citizens of the Settling State or that a public emergency requiring immediate action exists, it will make best efforts to provide reasonable notice to a Settling Pharmacy prior to initiating any such action.

XV. COMPLIANCE CERTIFICATION

1. Each Settling Pharmacy's Chief Pharmacy Controlled Substances Officer shall, after diligent inquiry, complete an annual compliance certification as set out in Section XV(4).

2. The certification shall be filed annually for the duration of these Injunctive Terms with a Settling State's appropriate licensing and/or regulatory agency and its Attorney General.

3. The certification shall state:

> "I understand the compliance requirements and responsibilities as they relate to [insert name of department], an area under my supervision. My job responsibilities include attempting to achieve compliance with regard to the [insert name of department] with all applicable statutory requirements, obligations of the Injunctive Terms, and applicable policies, and I have taken steps to promote such compliance. To the best of my knowledge, the [insert name of department] is in compliance with the obligations of these Injunctive Terms. I understand that this certification is being provided to and relied upon by the State of [Settling State]."

4. If the Chief Pharmacy Controlled Substances Officer is unable to provide such a certification, the Chief Pharmacy Controlled Substances Officer shall provide a written explanation of the reasons why he or she is unable to provide the certification outlined above.

XVI. DATA SHARING

1. Each Settling Pharmacy shall consent to the provision by their distributors of the Settling Pharmacy's unblinded "867 Data" (data sent from the distributor to the manufacturer concerning the sale of its products to Settling Pharmacy) to opioid manufacturers on any particular Designated Controlled Substances manufactured by them as soon as commercially reasonable and at no cost to the manufacturers, provided that, pursuant to a prior written agreement with Settling Pharmacy, the opioid manufacturers agree (a) to ensure the confidentiality of the 867 Data, except as required by law; (b) to implement safeguards and procedures to limit access to and use of the 867 Data, except as required by law; (c) that the 867 Data shall be used solely for compliance purposes as part of their Suspicious Order Monitoring programs; and (d) that the 867 Data shall be shared only with specified personnel and shall not be shared with business or sales personnel.

2. To the extent that Settling Pharmacy provides McKesson Corporation, Cardinal Health, Inc., or AmerisourceBergen Corporation (the "Settling Distributors") with Pharmacy Customer Data (as defined in the Distributor Injunctive Terms) for use in their Controlled Substance Monitoring Programs, Settling Pharmacy agree that the Settling Distributor(s) may share such Pharmacy Customer Data with the Monitor appointed pursuant to the Distributor Injunctive Terms, provided that the Monitor agrees, pursuant to a prior written agreement with Settling Pharmacy, (a) to ensure the confidentiality of the Pharmacy Customer Data; (b) to implement safeguards and procedures to limit access to and use of the Pharmacy Customer Data; (c) that the Pharmacy Customer Data is used solely for the purpose of ensuring the Settling Distributors' compliance with the Distributor Injunctive Terms; and (d) that the Pharmacy Customer Data shall be shared only with specified personnel.

XVII. CLEARINGHOUSE

1. The Settling Pharmacy will confer with any Settling Distributor that distributes Designated Controlled Substances to its retail pharmacies and the States Injunctive Relief Committee for a period not to exceed six months from the Injunctive Terms Implementation Date to determine: what additional deidentified information, if any, is needed from the Settling Pharmacy for a Settling Distributor to perform suspicious order monitoring,; if additional deidentified information is needed, how the Settling Pharmacy shall provide it to a Settling Distributor; and what information provided by the Settling Pharmacy to a Settling Distributor may be deposited by the Settling Distributor into the Clearinghouse. For the avoidance of doubt "deidentified" does not refer to omission of information about Prescribers. If agreements are not reached, the matters in dispute shall be submitted to arbitration. Due to patient privacy and legal restrictions and other confidentiality and commercial concerns, in connection with any meet and confer described above, the Settling Pharmacy may not be compelled to provide individual patient-level or prescription-level data, de-identified or otherwise, to the Settling Distributors.

2. The Settling Pharmacy and Settling Distributors will also determine whether and in what amount each Settling Pharmacy will contribute to the cost of the operation of the Clearinghouse. When a Settling Pharmacy contributes to the costs of the Clearinghouse, Settling Pharmacy, Settling Distributors and all other participants in the Clearinghouse shall determine an equitable amount of the Settling Pharmacy's contribution. If agreements are not reached, the matters in dispute shall be submitted to arbitration.

3. Any data provided by a Settling Pharmacy to a Settling Distributor and/or the Clearinghouse pursuant to these Injunctive Terms shall be treated in compliance with state and federal law, including but not limited to the Health Insurance Portability and Accountability Act of 1996 ("HIPAA") and all applicable state and federal privacy laws.

XVIII. CHANGES & MODIFICATIONS

1. These Injunctive Terms may be amended or modified with the written consent of Settling Pharmacy and a majority of the States Injunctive Relief Committee.

EXHIBIT Q

[Intentionally Omitted]

EXHIBIT R

Agreement on Attorneys' Fees, Costs, and Expenses

This Agreement on Attorneys' Fees, Costs, and Expenses ("Fee Agreement") is entered between CVS and the Plaintiffs' Executive Committee appointed in the multidistrict litigation in the Northern District of Ohio, *In re National Prescription Opiate Litigation*, No. 1:17-MD-2804 ("MDL PEC"), in connection with the CVS Global Opioid Settlement Agreement ("CVS Agreement"). This Fee Agreement becomes effective on the Effective Date of the CVS Agreement or the date that the Consent Judgments anticipated under the CVS Agreement become final in 25 Settling States (whichever is later).

I. Definitions

A. This Fee Agreement incorporates all defined terms in the CVS Agreement, unless otherwise defined herein, and shall be interpreted in a manner consistent with the CVS Agreement.

B. "*Applicant*." Any Attorney or MDL Participating Counsel who seeks an award of attorneys' fees from the Attorney Fee Fund pursuant to the procedures established by the MDL Court and the Fee Panel.

C. "*Attorney*." Any of the following retained through a legal contingency fee or hourly fee contract: a solo practitioner, multi-attorney law firm, or other legal representative of a Participating Subdivision or MDL Participating Counsel. This does not include Subdivision in-house attorneys.

D. "*Attorney Fee Fund*." An account consisting of $500,615,944 allocated to pay attorneys' fees approved pursuant to Section II.B. of this Fee Agreement, established by Order of and under the ongoing jurisdiction of the MDL Court, as provided below.

E. "*Common Benefit*." Work performed for the benefit of all Participating Subdivisions and Tribal Nations, including, but not limited to, pretrial matters, discovery, trial preparation, trial, settlement negotiations, and all other work that advances the interests of the Participating Subdivisions.

F. "*Common Benefit Fund*." The sub fund of the Attorney Fee Fund described in Section II.C.

G. "*Common Benefit Order*." The Ongoing Common Benefit Order (Dkt. #4428) in *In re National Prescription Opiate Litigation*, Case No. 1:17-md-2804, any subsequent amendments or modifications to that order, and any successor orders on Common Benefit.

H. "*Contingency Fee Fund*." The sub fund of the Attorney Fee Fund described in Section II.D.

I. "*Cost and Expense Fund Administrator*." The administrator appointed by the MDL Court on August 12, 2021 (MDL Docket No. 3828), to administer the Cost Fund and its sub funds as provided in the Fee Agreement.

J. "*Cost Fund*." An account consisting of $30,000,000, composed of the MDL Direct Cost Fund and the Subdivision Cost and Expense Fund, as provided below.

K. "*Court Common Benefit Fund*." The Common Benefit Fund established by the MDL Court in its orders of July 22, 2021, MDL Docket No. 3794, and May 9, 2022, MDL Docket No. 4428.

L. "*Fee Entitlement*." Any right, entitlement, or expectation, including but not limited to a fee contract, contingent fee contract, agreement, referral arrangement, co-counsel arrangement, State Back-Stop Agreement, or any other arrangement by which counsel could receive compensation or other consideration. For the avoidance of doubt, the scope of Fee Entitlement under paragraph II.G.3.a. does not include any Attorneys' fees associated with representation of a State.

M. "*Fee Panel*." The three-person panel appointed by the MDL Court on August 12, 2021 (MDL Docket No. 3828), to administer and make recommendations for the allocation and distribution of the Attorney Fee Fund and its sub funds as provided in the Fee Agreement.

N. "*Later Litigating State.*" A State that first files a lawsuit bringing a Released Claim against a Released Entity after December 9, 2022.

O. "*MDL Court*." United States District Court for the Northern District of Ohio Eastern Division, Case No. 1:17-md-2804, Judge Dan Aaron Polster.

P. "*MDL Direct Cost Fund*." The cost fund described in Section II.F below.

Q. "*MDL Participating Counsel."* MDL Participating Counsel includes an attorney or firm authorized by MDL 2804 Lead Counsel to perform work for the Common Benefit of Participating Subdivisions. By way of example, it would include insurance counsel and appellant counsel.

R. "*MDL PEC*." The Plaintiffs' Executive Committee appointed by the MDL Court.

S. "*Non-Participating Litigating Subdivision*." A Litigating Subdivision that is not a Participating Subdivision.

T. "*Non-Participating State.*" A State that is not a Participating State.

U. "*Participating Litigating Subdivision*." A Litigating Subdivision that is also a Participating Subdivision.

V. "*Participation Agreement*." An agreement executed by an Attorney that acknowledges the obligation to pay an appropriate MDL Common Benefit Assessment.

W. "*Qualified Tribal Representation.*" Representation by an attorney of a Participating Tribal Government regarding Released Claims against Released Entities. Such counsel are eligible for Common Benefit Fee consideration. The CVS Tribal Global Settlement will provide for the contribution to the Common Benefit Fund as shall be determined by the MDL Court.

X. "*Qualifying Representation*." Legal services provided for representation of the MDL PEC or Participating Litigating Subdivision regarding Released Claims against Released Entities.

Y. "*State Back-Stop Agreement*." Any agreement by a Settling State and private counsel for Participating Subdivisions in that State (or legislation enacted in that State) to provide, adjust, or guarantee attorneys' fees and costs, whether from the Attorney Fee Fund or any other source recognized in the agreement or legislation.[1]

Z. *"Subdivision Cost and Expense Fund."* The fund created to pay approved Subdivision and Tribal Nations costs and expenses as set forth in Section II.E.

AA. *"CVS"* means (i) CVS Health Corporation and CVS Pharmacy Inc. and (ii) all of their respective past and present direct or indirect parents, subsidiaries, divisions, affiliates, joint ventures, predecessors, successors, and assigns.

II. Fees and Costs

A. *Total Attorneys' Fees and Costs*

1. Total attorneys' fees and costs to be paid by CVS to Attorneys under this Fee Agreement shall be up to, but in no event more than, $530,615,944, subject to the reductions and provisions set forth below. The total attorneys' fees and costs consists of up to $500,615,944 for the Attorney Fee Fund, as set forth in Section II, and $30,000,000 in total for the Cost Fund, divided between the Subdivision Cost and Expense Fund and MDL Direct Cost Fund as set forth in Sections II.E and II.F, respectively. Additionally, CVS shall also pay $8,841,180 into the Court Common Benefit Fund as a common benefit fund assessment on the Credit set forth in Ex. M-3, and such amount shall be paid on the schedule set forth in Ex. M-3. The maximum attorney fees and costs allowed under this Fee Agreement, subject to the reductions set forth herein, are set forth in Ex. M-3 and shall be paid on the schedule in Ex. M-3.

2. If an Eligible State does not join the Agreement by the State Participation Date and is accordingly not a Settling State, the total attorneys' fees and costs to be

[1] Nothing herein shall be understood to indicate approval for additional State Back-Stop Agreements or modifications of existing State Back-Stop Agreements.

paid under this Fee Agreement by CVS shall be reduced by twelve point four percent (12.4%) times the Remediation Payment amount that would have been allocated to that Non-Settling State as set forth in Section IV.B of the CVS Agreement.

3. The total attorneys' fees and costs to be paid under this Fee Agreement by CVS shall also be reduced by the amount of the Contingency Fee Fund for Attorneys representing Litigating Subdivisions in any Settling State that continue to pursue Released Claims ("*Non-Participating Litigating Subdivisions*"), as set forth in Section II.D.4 and II.H.7 below.

4. If CVS settles with any Non-Settling State after December 9, 2022, and such settlement allows for the Subdivision(s) in such Non-Settling State to join the settlement, CVS agrees to withhold from the attorney fee portion of such settlement a Common Benefit Fund assessment, to be deposited in the Court Common Benefit Fund, of 7.5% times the portion of the Remediation Payment that would have been due to such State if it had participated in the CVS Settlement and been awarded its full portion of the Remediation Payment (the "*CVS State Settlement CBF Assessment*"). If CVS settles with any Subdivision(s) in a Non-Settling State other than in connection with a statewide settlement that includes the relevant State after December 9, 2022, then CVS agrees to withhold from the attorney fee portion of such settlement a Common Benefit Fund assessment, to be deposited in the Court Common Benefit Fund, of 7.5% times the portion of the Remediation Payment that would have been due to such Subdivision under this Agreement (the "*CVS Subdivision CBF Assessment,*" and, along with the CVS State Settlement CBF Assessment, each a "*CVS CBF Assessment*"). If (a) CVS settles with a Non-Settling State after December 9, 2022, (b) such settlement does not allow for the Subdivision(s) in such Non-Settling State to join the settlement, and (c) CVS later prevails in asserting that Released Claims of Primary Subdivisions in such Non-Settling State were released as a result of such settlement, CVS agrees to deposit the CVS State Settlement CBF Assessment in the Common Benefit Fund. Any CVS CBF Assessment is inclusive of any assessment related to such settlement that would be required by the Common Benefit Order. To the extent that CVS is required to pay any additional and/or separate assessment on such settlement as a result of the Common Benefit Order, the CVS CBF Assessment shall be reduced by the amount required to be paid pursuant to the Common Benefit Order.

B. *Attorney Fee Fund and Sub Funds*

1. The Attorney Fee Fund shall consist of the Contingency Fee Fund and the Common Benefit Fee Fund. There shall be a split of the Attorney Fee Fund into the Contingency Fee Fund and the Common Benefit Fund. The split shall be 40% to the Contingency Fee Fund and 60% to the Common Benefit Fund.

2. The Cost Fund shall include the MDL Direct Cost Fund and the Subdivision Cost and Expense Fund. The State Counsel Fee Fund and the State Cost Fund shall

be separate funds under the control of the Settling States and are not part of this Fee Agreement.

3. It is the intention of the Parties that the Contingency Fee Fund and the Common Benefit Fund shall be administered by the Fee Panel appointed under MDL Docket No. 3828, which will be governed by the provisions of this Fee Agreement and shall design the process and procedures for the allocation of fees pursuant to this Fee Agreement and the MDL Court's Order. The Cost Funds shall be administered by the Cost and Expense Fund Administrator appointed under MDL Docket No. 3828, who will be governed by the provisions of this Agreement and shall design the process and procedures for the allocation of costs pursuant to this Agreement and the MDL Court's Order.

4. The fees to be paid under this Fee Agreement are available for Attorneys engaged in Qualifying Representations and Qualified Trial Representations only. Fees to be paid under this Fee Agreement are not available prior to the Effective Date of the CVS Agreement, or if the CVS Agreement does not proceed. Fees to be paid under this Fee Agreement are not available for representation of States, Non-Participating Subdivisions, or Non-Litigating Subdivisions and are not available for representation of private hospitals, third-party payors, NAS claimants, personal injury/wrongful death claimants, or any entity other than Participating Litigating Subdivisions. In addition, fees under this Fee Agreement are not available for representation of any individual or entity in matters other than those claims against Released Entities, but may include a reasonable share of representations that involve development of facts for pursuit of opioid-related claims against multiple defendants in the pharmacy, manufacturing, and distribution chain.

5. In no event shall CVS be required to pay more into the Attorney Fee Fund in any Payment Year than the maximum amount specified in paragraph II.A.1., which amounts are reflected in Exhibit M to the CVS Agreement. The amounts allocated to the Contingency Fee Fund and the Common Benefit Fund set by the Fee Panel shall be subject to the reductions set forth in Section II.A.2 and the reductions and refunds set forth below.

6. Awards of fees from the Contingency Fee Fund shall be available to Attorneys with Qualifying Representations of Participating Litigating Subdivisions eligible to receive an allocation under the CVS Agreement, as set forth in Exhibit G to the CVS Agreement, and shall be made by applying the Mathematical Model attached as Exhibit "A" to this Fee Agreement. The collection of the data and calculations for the Mathematical Model has been a cooperative effort among private counsel for a large number of Litigating Subdivisions. The analysis has been spearheaded by Joseph Tann and Andrew Arnold. The Fee Panel is encouraged to continue working with those counsel in application of the Model. The Fee Panel shall oversee the application of the Model and resolve any questions or disputes concerning the eligibility of a Counsel to participate as required in

Section II.G. The Panel is empowered to hear disputes concerning and ensure the accuracy of the mathematical calculation.

7. As to awards from the Contingency Fee Fund, there shall be no right of appeal.

8. Any appeal of an award of the Fee Panel from the Common Benefit Fund will be made to the MDL Court and be reviewed under an abuse of discretion standard.

C. *Common Benefit Fund* (60% of the Attorney Fee Fund)

1. The maximum potential total Common Benefit Fund payment to be made by CVS into the Attorney Fee Fund is $300,369,566.40, and in no event shall it exceed that amount. CVS's maximum potential Common Benefit Fund payments are subject to the reductions set forth in Section II.A.2. for Non-Settling States and to the adjustments set forth below and, subject to those reductions, shall be paid on the following yearly schedule:

	CVS Maximum Common Benefit
Payment Year 1	$54,779,142.60
Payment Year 2	$48,406,953.60
Payment Year 3	$65,727,823.80
Payment Year 4	$65,727,823.20
Payment Year 5	$65,727,823.20
Total	$300,369,566.40

Additionally, CVS shall also pay $8,841,180 into the Court Common Benefit Fund as a common benefit fund assessment on the Credit set forth in Ex. M-3, which shall be paid on the schedule set forth in Ex. M-3.[2]

[2] For the avoidance of doubt, CVS is not required to pay any sums under this Agreement for matters settled prior to December 6, 2022, other than the $8,841,180 credit referenced above.

2. The Common Benefit Fund shall be available to compensate Attorneys engaged in Qualifying Representations of Participating Litigating Subdivisions and Qualified Tribal Representation of Tribal Participating Governments who:

   a. have performed work for the Common Benefit of all Participating Subdivisions and/or Tribal Nations consistent with the provisions to the guidelines established by Judge Polster set forth in MDL 2804 and the Order dated May 1, 2018, under docket number 358, which is included herein by reference; and

   b. satisfy the eligibility criteria set forth in Section II.G.

   For purposes of Common Benefit Fund distribution, Attorneys representing Tribal Nations litigating against CVS have also reached a settlement for Released Claims with CVS. These settlements are the subject of agreements with CVS. Attorneys representing Tribal Nations are eligible for Common Benefit consideration provided such agreements with CVS became effective under their terms. Such Attorneys must meet the eligibility criteria in Section II.G.

   For purposes of Common Benefit Fund distribution, MDL Participating Counsel not engaged in Qualifying Representations of Participating Litigating Subdivisions but who performed work for the Common Benefit pursuant to authorization from the MDL Co-Leads and meet the eligibility criteria in Section II.G. shall be eligible.

3. CVS's Common Benefit Fund payments under this Fee Agreement satisfy, at a minimum, any assessments or withholdings for the CVS Agreement that are or could be required under the Common Benefit Order for Settling States and their Participating Subdivisions. The Common Benefit Fund shall be overseen by the Fee Panel, which shall determine the allocation of funds to eligible Attorneys consistent with this Fee Agreement and the Common Benefit Order.

4. In assessing the benefits that an Applicant has conferred to Participating Subdivisions (including non-Litigating Subdivisions) and/or Tribes for purposes of any compensation decision, the Fee Panel shall give significant weight to the extent to which (i) the Applicant and his or her clients have contributed to increasing (or reducing) Initial Participation in the CVS Agreement, and (ii) the Applicant and his or her clients have contributed to increasing (or reducing) the amounts achieved under Incentive Payments A-D through participation in the CVS Agreement, including the CVS Tribal Agreement. The Fee Panel shall also consider additional fee recoveries the Applicant may potentially obtain, including, but not limited to, from attorney fee funds under other settlement agreements, State Back-Stop Agreements, representations of States or Tribal Nations, representations of other clients in opioids-related matters, or through the representation of Subdivision clients,

whether they participated in the CVS Agreement or not. It is the intent of this provision to recognize that the goal of the CVS Agreement is to provide for maximum participation by the Subdivisions, maximum abatement funding for all Subdivisions nationally, and the maximum peace for Released Entities. Therefore, representing one or more Non-Participating States or Non-Participating Subdivisions does not further the goal of the CVS Agreement, and should not be considered Common Benefit because it does not increase funds available to Participating Subdivisions' abatement programs. Representing one or more Later Litigating Subdivisions or Later Litigating States is antithetical to the CVS Settlement and detracts from Common Benefit. The Fee Panel shall consider this concept of "common detriment" set forth in this paragraph in all of its decision making with respect to the allocation of the Attorney Fee Fund among Applicants, as well as, in its discretion, any reductions provided to CVS as set forth in Section II.H.[3] The Fee Panel shall consider the totality of the Applicant's Participating Litigating Subdivisions as compared to the Applicant's Non-Participating Litigating Subdivisions; the Parties recognize that, although the goal is for 100% participation, Applicants with a greater number of clients have a greater probability of having one or more Non-Participating Litigating Subdivisions. As used in this paragraph II.C.4, "client" or "representing" a Subdivision shall include any Litigating Subdivision as to which the Applicant has a Fee Entitlement.

5. As set forth in Section II.H, the Fee Panel must consider the factors described in paragraph II.C.4 to determine how and whether to reduce the amounts to be paid by CVS under this Fee Agreement and to determine how to allocate funds among Applicants. They may also, at their discretion, consider other factors not inconsistent with the factors set forth in paragraph II.C.4. and Section II.H. Any reduction in payment obligation or credit to be given CVS in this Fee Agreement shall be applied against Payment Year 5 and then working backwards. Any reduction to an Applicant not credited to CVS shall be allocated to attorneys whose Litigating Subdivision clients participated in the settlement by the Initial Subdivision Participation Date.

D. *Contingency Fee Fund* (40% of the Attorney Fee Fund)

1. The maximum potential total Contingency Fee Fund payment to be made by CVS into the Attorney Fee Fund is $200,246,378.60, and in no event shall it exceed that amount. CVS's maximum potential Contingency Fee Fund payment shall be subject to the reductions set forth in Section II.A.2. for Non-

[3] Regardless of the status of the CT-3 bellwether counties under the CVS Agreement and this Fee Agreement, and notwithstanding any provisions in those agreements to the contrary, it is expressly agreed that the attorneys who represent or worked on behalf of the CT-3 bellwether counties in the CT-3 litigation are eligible to apply to the Fee Panel for attorneys' fees from the Common Benefit Fund for the CT-3 representation and that the Fee Panel has discretion to determine that such representation has achieved common benefit.

Settling States and to the adjustments set forth below and, subject to those reductions, shall be paid on the following yearly schedule:

	CVS Maximum Contingency Fee
Payment Year 1	$36,519,428.40
Payment Year 2	$32,271,302.40
Payment Year 3	$43,818,549.20
Payment Year 4	$43,818,548.80
Payment Year 5	$43,818,548.80
Total	$200,246,377.60

2. The Contingency Fee Fund shall be available to compensate Attorneys engaged in Qualifying Representations of Participating Litigating Subdivisions that meet the criteria set forth in Section II.G.

    a. The Contingency Fee Fund shall be available to Attorneys who represent Litigating Subdivisions that are Participating Subdivisions, whether their actions are filed in state or federal court, and meet the eligibility criteria of Section II.G.

    b. Participation in the Contingency Fee Fund by counsel that have a case that is not subject to the jurisdiction of the MDL Court shall not create, provide, or waive jurisdiction of the MDL Court over that Litigating Subdivision, that case or Attorneys, other than to oversee the fairness of the distribution process, and enforcement of this Fee Agreement.

3. The amount owed by CVS to the Contingency Fee Fund shall be reduced to reflect the non-joinder of Litigating Subdivisions in Settling States by subtracting the amounts identified by the Fee Panel, pursuant to paragraph II.H.7, that would have been owed to counsel for Non-Participating Litigating Subdivisions in Settling States had such Litigating Subdivisions been Participating Subdivisions.

4. In the event that after the date of the CVS Agreement, CVS, prior to the Effective Date of the CVS Agreement, settles with any Litigating Subdivision

that would have been eligible to participate in the CVS Agreement, and, under such settlement agreement pays attorneys' fees, the Fee Panel shall treat those Litigating Subdivisions as Participating Litigating Subdivisions and, applying the same criteria applicable to all Attorneys for Participating Litigating Subdivisions, determine what amount they would have been paid from the Contingency Fee Fund if they had become Participating Subdivisions under the CVS Agreement without such prior settlement. That sum, rather than being paid to the Attorney for the previously settling Litigating Subdivision, shall be returned to CVS, except that such refund shall not be greater than the amount paid to the Attorneys under the Litigating Subdivision's prior settlement agreement.

E. *Subdivision Cost and Expense Fund*

1. CVS shall pay $22,500,000 into the Subdivision Cost and Expense Fund on the schedule set forth below.

	Cost Fund
Payment Year 1	$11,250,000.00
Payment Year 2	$11,250,000.00
Total	$22,500,000.00

2. The Subdivision Cost and Expense Fund shall be available to compensate Attorneys for costs and expenses arising out of representation of Participating Litigating Subdivisions. No funds in the Subdivision Cost and Expense Fund may be used to compensate the costs incurred by Non-Participating Subdivisions or Non-Litigating Subdivisions or costs and expenses arising out of representation of any such Subdivision. In allocating the Subdivision Cost and Expense Fund, the Administrator shall not allocate any funds for costs incurred after December 9, 2022.

3. During the period between December 9, 2022 and the Effective Date of the CVS Agreement, the MDL PEC, as well as Litigating Subdivisions' Attorneys, shall make best efforts to cease litigation activity against CVS, including by jointly seeking stays or severance of claims against CVS, where feasible, or postponements if a motion to stay or sever is not feasible or is denied, so long as such actions are not otherwise detrimental to the Litigating Subdivision.

4. In the event that CVS, prior to the Effective Date of the CVS Agreement, settles with any Litigating Subdivision and, under such settlement agreement, pays costs to the Litigating Subdivision or its Attorney, the MDL Cost and Expense Fund Administrator shall treat those Litigating Subdivisions as Participating Litigating Subdivisions and, using the same criteria applicable to all applicants to the Subdivision Cost and Expense Fund, determine what amount in costs the Litigating

Subdivision or its Attorney would have been paid from the Subdivision Cost and Expense Fund if they had settled under the CVS Agreement. That sum, rather than being paid to the Attorney or the previously settling Litigating Subdivision, shall be credited and/or returned to CVS, except that such sum shall not be greater than the amount paid under the previously settled Litigating Subdivision's settlement agreement.

5. The Cost Fund shall be administered by the Cost Fund and Expense Fund Administrator (MDL Docket No. 3828), who will be governed by the provisions of this Agreement and shall design the process and procedures for the allocation of costs pursuant to this Agreement and the MDL Court's Order.

6. The costs of the Cost and Expense Fund Administrator shall be paid from the Cost Fund and allocated by the Cost and Expense Fund Administrator between the MDL Direct Cost Fund and the Subdivision Cost and Expense Fund to fairly charge each fund the cost incurred in implementing and supervising the specific fund.

7. The Cost and Expense Fund Administrator shall set the process and procedures for submission of and criteria for applications for payment of Subdivisions' and Tribal Nations' costs and expenses. The Cost and Expense Fund Administrator shall receive and evaluate applications from Participating Litigating Subdivisions and litigating Tribal Nations, whether filed in Federal Court or State Court, to seek reimbursement for eligible costs under Section II.E.2 in pursuit of claims against CVS. The process shall require a showing that the costs or expenses sought were reasonably incurred in furtherance of active litigation of a designated state or federal bellwether trial-set case, or Common Benefit. The Cost and Expense Fund Administrator shall require transparency from all applicants as to any other sources for compensating Attorneys for Subdivisions and Tribal Nations for costs incurred. If funds remain after the reimbursement of approved out-of-pocket costs, the Cost and Expense Fund Administrator may consider reasonable and appropriate payment for client time, costs, or expenses incurred by recognized trial bellwether plaintiffs. At the conclusion of the process, any funds not allocated by the Cost and Expense Fund Administrator shall be transferred to the Common Benefit Fund established in this Exhibit R.

8. In the event that States and Subdivisions enter into an additional global settlement with a party or parties other than CVS that is (a) under the jurisdiction of the MDL Court in MDL No. 2804, (b) creates a separate cost fund, and (c) unless the parties agree to another date, such agreement has an effective date prior to June 30, 2023, the Cost and Expense Fund Administrator shall have the authority to aggregate the Cost Fund with the cost fund created under that separate global settlement agreement. The Cost and Expense Fund Administrator shall have the authority to address the appropriate procedures and required information to allow the costs to be funded from the appropriate cost fund or shared by two or more cost funds; *provided, however*, that the Subdivision Cost and Expense Fund shall remain subject to the requirements set forth in Section II.E.2. For the avoidance of doubt, the Subdivision Cost and Expense Fund is available only to compensate Attorneys for costs and expenses arising out of representation of Participating Litigating Subdivisions, and no funds in the Subdivision Cost and Expense Fund may be used to compensate the costs incurred by Non-Participating Subdivisions or Non-Litigating Subdivisions or costs and expenses arising out of representation of any such Subdivision.

F. *MDL Direct Cost Fund*

1. CVS shall pay $7,500,000 into the MDL Direct Cost Fund on the schedule set forth below.

	MDL Direct Cost Fund
Payment Year 1	$3,750,000.00
Payment Year 2	$3,750,000.00
Total	$7,500,000.00

2. The MDL Direct Cost Fund shall be released following the Effective Date of this Fee Agreement without any delay to reimburse the MDL Counsel for an agreed-to portion of the expenses incurred, as approved by the Cost and Expense Fund Administrator. The sum deposited into the MDL Direct Cost Fund will be paid directly to the MDL Opiate Capital Account. The Cost and Expense Fund Administrator may include costs incurred by the MDL PEC in furtherance of litigation, mediation, implementation, and management of the Settlement.

3. In allocating the MDL Direct Cost Fund, the Administrator shall not allocate any funds for costs incurred after December 9, 2022, unless the Administrator determines that there are sufficient funds to cover all Subdivision costs incurred prior to December 9, 2022 and that special circumstances exist to justify costs incurred following the public announcement of the CVS Agreement, including reasonable costs related to the implementation of the CVS Agreement.

G. Eligibility

1. It is the intention of all parties participating in the Fee Panel process that there should be total transparency to the Fee Panel and to all fund participants. In connection with the process to be developed by the Fee Panel, any and all monies in attorney's fees received or awarded, including prior or future Contingency Fees, Common Benefit Fees, referral fees, expenses paid, promises for payment, or any other Fee Entitlement, to any Applicant in any opioid litigation shall be disclosed to the Fee Panel as a condition of participating in the Attorney Fee Fund and prior to an award from the Fee Panel. Any payment, expectation of payment or perceived entitlement to participate in a State Back-Stop Agreement or any other agreement reached with a Settling State or any Subdivision or any other source regarding payment of fees must be disclosed to the Fee Panel. Similarly, any right to payment from any other fund, for example a fund for payment to lawyers representing Settling States or Tribal Nations or Subdivisions shall be disclosed to the Fee Panel. Because it is anticipated that there will be multiple firms listed on contingent fee agreements with Litigating Subdivisions, the Fee Panel shall establish procedures, with input from Attorneys for Participating Litigating Subdivisions, for which party or parties should petition for fees from such groups and to whom the fee shall be paid and thereafter distributed to co-counsel in accordance with applicable agreements. For the avoidance of doubt, all Attorneys that are part of such groups must meet the eligibility criteria in paragraph II.G.3, must be subject to the criteria set forth in paragraph II.C.4, and must be disclosed to the Fee Panel.

2. An Applicant may apply for and recover attorneys' fees from the Common Benefit Fund, the Contingency Fee Fund, and any fund created by a past or future State Back-Stop Agreement, provided the Applicant satisfies the requirements relevant to each such fund and requirements for disclosure to the Fee Panel.

3. An Attorney may not receive any payment from the Attorney Fee Fund (which includes both the Contingency Fee Fund and the Common Benefit Fund) unless the following eligibility criteria are met and annually certified by the Attorney:

   a. The Attorney must expressly waive the enforcement against the Litigating Subdivision client of all Fee Entitlements (other than under State Back-Stop Agreements) arising out of or related to any or all Qualifying Representations of any Participating Litigating Subdivision prior to applying for attorneys' fees from the Attorney Fee Fund. All applications

for attorneys' fees under this Fee Agreement shall include an affirmation by the Attorney of such waiver and notice to the client(s) of such waiver. Such waiver shall not preclude the Attorney from submitting such Fee Entitlements to the Fee Panel as a factor for consideration in allocating payments from the Attorney Fee Fund or in connection with a State Back-Stop Agreement. For the avoidance of doubt, no Attorney may recover fees under this Fee Agreement unless the Attorney expressly agrees not to enforce Fee Entitlements as to each and every Participating Litigating Subdivision represented by that Attorney, but such Attorneys may participate in and receive funds from a State Back-Stop Agreement.

b. The Attorney must represent that s/he has no present intent to represent or participate in the representation of any Later Litigating Subdivision or Later Litigating State with respect to Released Claims against Released Entities.

c. The Attorney must represent that s/he has not and will not engage in any advertising or solicitation related to Released Claims against Released Entities where such advertising or solicitation relates to a representation of a Subdivision eligible to be a Participating Subdivision after the Reference Date except that the Attorney may recommend participation in the Agreement.

d. The Attorney must represent s/he will not charge or accept any referral fees for any Released Claims brought against Released Entities by Later Litigating Subdivisions or Later Litigating States. This representation shall not prohibit Attorneys from receiving allocated shares of any future common benefit assessments arising out of settlements or judgments with Later Litigating Subdivisions or Later Litigating States that are the result of the MDL Court's Common Benefit Order.

e. The Attorney may not have and must represent that s/he does not have a Fee Entitlement related to a Later Litigating Subdivision or Later Litigating State, other than a potential Common Benefit Fee.

f. The Attorney must fully disclose the participation, or the anticipation of participation, in any agreement with a Settling State or Participating Subdivision concerning fees arising out of or related to the CVS Agreement, including any fees paid or anticipated to be paid or any State Back-Stop Agreement.

g. The Attorney must identify for the Fee Panel whether s/he utilized state litigation work product or MDL work product, including but not limited to ARCOS data, document repositories, experts developed in the MDL, trial transcripts, or deposition transcripts. The Attorney must identify whether s/he signed the MDL Participation Agreement.

h. Any Attorney who applies for fees from one or both Funds must represent that, having exercised his/her independent judgment, s/he believes the CVS Agreement to be fair and will make or has made best efforts to recommend the Agreement to his or her Subdivision clients in Settling States. For avoidance of doubt, each Attorney is expected to exercise his or her independent judgment in the best interest of each client individually before determining whether to recommend joining the settlement. All applications for attorneys' fees or costs under this Section shall include an affirmation by the Attorney in compliance with this Subsection.

4. No Attorney receiving fees under this Fee Agreement may apply for or recover from the Attorney Fee Fund fees arising from representing a Non-Settling State or a Non-Participating Subdivision, provided, however, that this provision is not intended to prohibit Attorneys who do not represent or otherwise have a contractual agreement with such Non-Settling State or Non-Participating Subdivision from receiving allocated shares of any future common benefit assessments that arise out of settlements or judgments involving such Non-Settling State or Non-Participating Subdivision. All applications for attorneys' fees under this Section shall include an affirmation by the Attorney of compliance with this Section.

5. An Attorney who has filed an application under this section and received an award of attorneys' fees shall provide a certification of compliance with the requirements of this Fee Agreement annually during the years upon which they are still entitled to receive attorneys' fee payments under this Agreement. This certification will be done as directed by the Panel.

6. If, at any time, the Attorney is unable to make the representations set forth in this Section, such representations become untrue, or the Attorney falsely represents compliance with the eligibility criteria, the Attorney shall cease to be eligible to receive funds from the Attorney Fee Fund until further review by the Fee Panel of the Attorney's eligibility under and compliance with this Section II.

7. If an Attorney has a Fee Entitlement with a Later Litigating Subdivision or Later Litigating State or otherwise becomes unable to reaffirm compliance with the eligibility criteria set forth above, the Attorney shall notify the Fee Panel. For the avoidance of doubt, any Attorney who undertakes any new representation of, or has a Fee Entitlement with, a Later Litigating Subdivision or Later Litigating State shall be prohibited from receiving any future funds from the Attorney Fee Fund. If an Attorney fails to notify the Fee Panel of such Fee Entitlement with a Later Litigating Subdivision or Later Litigating State, the Attorney shall be required to refund amounts previously paid. The Fee Panel shall notify CVS when it receives notification.

8. To the extent an Attorney who has received compensation from the Attorney Fee Fund based on Qualifying Representations of Participating Litigating Subdivisions under the CVS Agreement represents a Later Litigating Subdivision or Later Litigating State, such Attorney shall be obligated to refund such amounts received as compensation from the Attorney Fee Fund to CVS. CVS or such Attorney may bring any dispute as to whether such Attorney shall be obligated to refund such amounts received from the Attorney Fee Fund to CVS, to the Fee Panel. Nothing herein shall require a multi-attorney law firm that has received compensation from the Attorney Fee Fund to refund such amounts if an attorney of the firm that is no longer affiliated with such law firm, after such departure, represents a Later Litigating Subdivision or Later Litigating State, provided that (a) neither the law firm nor any of its other attorneys have any contractual or financial arrangement regarding, stand to benefit directly or indirectly from, or directly or indirectly provide financial or other support of any kind to, the former attorney's representation of the Later Litigating Subdivision or Later Litigating State and (b) if the former attorney was a partner or owner of the multi-attorney law firm at the time that the law firm received compensation from the Attorney Fee Fund, the former attorney shall be obligated to refund such amounts as the former attorney earned as a result of the compensation that the law firm received from the Attorney Fee Fund.

9. In the event that an Attorney is deemed ineligible by the Fee Panel (whether based on its initial application or subsequent recertification), the Fee Panel shall provide notice to the Attorney and give the Attorney 30 days to provide additional information such that the Fee Panel could re-consider the Attorney's eligibility.

10. To the extent that an Attorney has a Fee Entitlement with a Participating Subdivision and is authorized to bring Released Claims against Released Entities, but such authorization is, in scope, less broad than the category of Released Claims set forth in the CVS Agreement, such Attorney may participate fully in both the Contingency Fee Fund and the Common Benefit Fund, without any reduction imposed by the Fee Panel due to the scope of the authorization, so long as the Participating Subdivision fully releases all Released Claims against Released Entities.

11. Attorneys applying to the Attorney Fee Fund knowingly and expressly agree to be bound by the decisions of the Fee Panel, subject to the limited appeal rights set forth in this Fee Agreement, and waive the ability to assert the lack of enforceability of the allocation reached through the procedures outlined herein.

12. Applicants are under an ongoing obligation to inform the Fee Panel in writing of any additional fees earned, expected, or received related to any Opioid litigation throughout the period of the Fee Panel's operation.

H. Calculation of Amounts Due

1. The Fee Panel shall be solely responsible for determining the amount of fees to be paid to each Applicant. None of the Released Entities shall have any responsibility, obligation, or liability of any kind whatsoever with respect to how attorneys' fees are calculated under this Section, except that the Fee Panel may receive information from CVS as to (a) the identity of Participating, Non-Participating, Litigating, Later Litigating, and Non-Litigating Subdivisions; (b) the impact of non-participation by a Litigating Subdivision as is relevant to the Fee Panel's determination in paragraph II.C.4; and (c) such other information as CVS may voluntarily elect to provide.

2. The Fee Panel shall establish procedures for making determinations under this Fee Agreement consistent with this Fee Agreement and orders of the MDL Court. Such procedures may include submission of documentary and/or other evidence, interviews with Applicants and/or other counsel (including counsel for CVS) that the Fee Panel deems appropriate, and/or other means of creating a record upon which fee awards will be based.

3. In making determinations under this Fee Agreement, the Fee Panel must apply the eligibility criteria set forth in Section II.G of this Fee Agreement and the criteria set forth in Section II. The Fee Panel shall ensure that payments are only made for Qualifying Representations of Participating Litigating Subdivisions. In addition, the Fee Panel will give consideration in regard to Common Benefit Fund awards to the *Johnson* factors, as well as the following factors (which factors may be applied and given relative weight in the Fee Panel's discretion):

    a. The Applicant's contemporaneously recorded time and labor dedicated to Qualifying Representations along with the Applicant's financial commitment to such Qualifying Representations. Claimed "time" will not be automatically accepted by the Fee Panel but will be critically reviewed and given substantially more weight and consideration if such time was subject to the audit process described in any Pretrial Order(s) governing the collection of common benefit time;

    b. The novelty, time, and complexity of the Qualifying Representations;

    c. The skill requisite to perform legal services properly and undesirability of the case;

    d. The preclusion of other employment by the Applicant due to time dedicated to Qualifying Representations;

    e. The Common Benefit, if any, alleged to have been conferred by the Applicant and whether such Common Benefit work product by that Applicant was used by others in parallel litigations against Released Entities

whether within or outside the MDL, provided that any Applicant claiming that s/he substantially benefited cases other than those in which s/he entered an appearance as counsel must substantiate such claims by proffering factual support, such as proper supporting affidavits or other documents as determined by the Fee Panel with input from Attorneys for Participating Litigating Subdivisions;

f. Any "common detriment," as set forth in paragraph II.C.4;

g. Any contingent fee agreement or other Fee Entitlement with Participating Subdivisions, enforcement of which, except for State Back-Stop Agreements, are waived in conjunction with the application, the nature and extent of any work for those Participating Subdivisions, whether such Participating Subdivisions actively litigated and, if so, the nature and procedural history of such case(s);

h. The experience, reputation, and ability of the Applicant;

i. Whether the Applicant's clients brought Released Claims against Released Entities;

j. The status of discovery in cases primarily handled by the Applicant;

k. The nature of any work by the Applicant on "bellwether" cases or cases that were similarly active in litigation;

l. Any pressure points successfully asserted by the Applicant in cases against CVS or any risk for CVS created by the Applicant in cases against CVS;

m. Any risk for defendants created by Applicants in cases against CVS;

n. Successful and unsuccessful motion practice in cases worked on by the Applicant;

o. The date of filing of any cases filed by the Applicant;

p. Obtaining consolidation of the litigation in the Applicant's jurisdiction;

q. The number and population of entities represented by the Applicant and the fees that would have been awarded under extinguished contingent fee arrangements;

r. Whether the Applicant's clients brought claims against CVS prior to the announcement of this settlement on December 9, 2022;

s. Whether the Applicant has had a leadership role in the litigation, whether in state or federal court;

t. Whether the Applicant has had a leadership role in any negotiations aimed at resolving the litigation;

u. Whether the Applicant's cases have survived motions to dismiss;

v. The extent to which the Applicant contributed to the work product used for the common benefit of opioids litigants, including, without limitation, work on ARCOS data, Prescription Data Monitoring Programs, IQVIA data, depositions, document production and analysis experts, motions, briefs and pleadings, trial preparations, and trials;

w. The extent to which litigation occurred prior to and contributed to completion of settlement negotiations, as distinct from litigation that occurred after the announcement of the CVS Agreement on December 9, 2022, such latter litigation both being of less value and, the case of litigation filed after the announcement of the CVS Agreement on December 9, 2022, resulting in a common detriment to the settlement process, which in both cases should be viewed less favorably; and

x. Any other factors that the Fee Panel finds to be appropriate to consider after input from Applicants to the Attorney Fee Fund.

4. It is possible that the States and Subdivisions that are litigating Opioid cases will enter additional settlements in close proximity of the time for processing the CVS Agreement. If there are additional settlements and these settlements create a Common Benefit Attorney Fee Fund to be administered by the Fee Panel, the Fee Panel may:

a. Consolidate the Common Benefit approval process to include evaluation of all Common Benefit Applications for all settlements entered after November 1, 2022;

b. Determine the fair and equitable allocation of the Aggregate Common Benefit Fees that come after December 9, 2022, including consideration of beneficial or detrimental actions taken with respect to any Settling Defendant contributing to the Common Benefit Attorney Fee Fund;

c. Give consideration to the amount and timing of each settlement, including the amount and timing of Common Benefit Fees;

d. The Fee Panel shall abide by the applicable Attorney Fee Agreement in each of the Settlements in Allocating the Common Benefit Fees provided for in the Settlement; and

e. Be guided in their work by the Orders of the Court related to Fees and Costs.

5. The Fee Panel shall develop procedures for receiving a single application, which may be updated or amended based on new information (such as participation by additional Litigating Subdivisions) from each Applicant seeking compensation from each sub fund of the Attorney Fee Fund pursuant to processes and procedures developed by the Fee Panel, which shall not be inconsistent with this Fee Agreement. Any request for attorneys' fees not included on the single application or through the updating/amendment process designed by the Fee Panel shall be deemed waived. For purposes of transparency and to permit the Fee Panel to conduct its work, the application from each Applicant shall, at a minimum, require each Applicant to:

   a. Identify all Litigating Subdivisions for which s/he is seeking payment from the Attorney Fee Fund;

   b. Identify all Subdivisions in both Settling and Non-Settling States (and, where applicable, Tribal Nations) with respect to which s/he has a Fee Entitlement with respect to Relevant Claims against Released Entities, and identify all co-counsel in such cases;

   c. Identify which of those Subdivisions are Participating Subdivisions and which are not (with similar information for Tribal Nations, where applicable);

   d. Specify the specific fund or funds within the Attorney Fee Fund from which the Attorney is seeking compensation;

   e. Demonstrate his or her eligibility for compensation from the relevant sub funds within the Attorney Fee Fund pursuant to the criteria set forth for the relevant sub fund;

   f. Identify any and all Fee Entitlements from representations of States, Tribal Nations, or other plaintiffs related to Released Claims against Released Entities or in opioids-related matters;

   g. Notwithstanding "a-f" above, the Panel may consider a supplemental application if the Applicant shows good cause why circumstances exist that will lead to consideration for additional Common Benefit award. Examples would include, but are not limited to, an Applicant having Non-Participating Litigating Subdivision clients that subsequently become Participating Subdivisions, a Bar Date passes that increases participation or an Allocation Agreement is reached.

6. With respect to the Common Benefit Fund, the Fee Panel shall (subject to any applicable MDL Court Order):

    a. Review the applications of all Applicants seeking compensation from the Common Benefit Fund, including determining eligibility for each Applicant as set forth in Section II.G.

    b. Using criteria set forth in Sections II.C and II.G, allocate amounts from the Common Benefit Fund to eligible Applicants, including payment amounts for each Payment Year. In making such allocations, the Panel shall apply the principles set forth in paragraph II.C.5 to the amounts paid to Applicants with a Common Benefit Fee Entitlement.

7. With respect to the Contingency Fee Fund, the Fee Panel shall:

    a. Review the applications of all Attorneys seeking compensation from the Litigating Subdivision Fee Fund, including determining eligibility for each Attorney as set forth in Section II.G.

    b. Apply the Mathematical Model in Exhibit A.

    c. Use such allocations to determine refund amounts owed to CVS from the Attorney Fee Fund, and inform CVS and the MDL PEC of all such adjustments.

8. To the extent that there is a dispute about the calculations of the Fee Panel related to the amount that CVS is required to pay (including application of any reductions or refunds under this Fee Agreement), such disputes shall be presented to the Fee Panel and any disputed funds be paid into/held in escrow. The Fee Panel shall resolve such disputes expeditiously, with either Party having the right to seek review from the MDL Court.

9. For purposes of determination of fee or cost awards, allocations, reductions, and possible reversions under this Fee Agreement, unless specified otherwise a Subdivision will be considered a Non-Participating Subdivision if it is not a Participating Subdivision as of the deadline for the application for the fee at issue (or, if the determination does not involve a specific application, the date on which the record for such determination closes).

10. In the event that the Fee Panel, through the use of the Mathematical Model set forth in Exhibit A, allocates funds from the Contingency Fee Fund for an Attorney based on a Qualifying Representation of a Participating Litigating Subdivision and that Subdivision is in a Settling State in which the Consent Judgment has not been approved, such funds shall be placed into escrow until the Consent Judgment is approved, after which time they shall be released.

I. Miscellaneous

1. The Fee Panel shall charge an hourly rate approved by the Court. The Pre-Effective Date costs associated with the Cost and Expense Fund Administrator shall be paid from funds in the Cost Fund. Post-Effective Date, the cost of the Fee Panel shall be charged against the applicable Fee Fund based on allocation by the Fee Panel and shall not be otherwise funded by CVS.

2. The MDL PEC will seek, and the Attorneys General for Settling States and the CVS will not oppose, a Common Benefit Fee Order requiring an assessment of 7.5% on the gross recovery (by judgment or settlement) of any Non-Participating Subdivision in a non-Settling State that is subject to the federal court jurisdiction, represented by a MDL PEC firm, represented by any Attorney receiving fees from the Common Benefit Fund, represented by any Attorney that signed a Participation Agreement or had been paid in a case otherwise under the jurisdiction of the MDL Court.

3. The MDL PEC shall provide to CVS information they have that identifies Attorneys who represent Litigating Subdivisions who are not Participating Subdivisions and who have an obligation to pay a common benefit assessment, either due to the MDL Court's orders or pursuant to a Participation Agreement.

4. The MDL PEC and CVS agree that it is a conflict of interest for an Attorney that had represented a Participating Subdivision to represent a Later Litigating Subdivision or Later Litigating State. This Subsection shall be enforceable to the extent permitted by the equivalent to Rules 1.16 and 5.6 of the ABA Model Rules of Professional Conduct in the relevant jurisdictions. The MDL PEC represents that it will comply with this provision in the case of the CVS Agreement until the Effective Date of the CVS Agreement, as well as thereafter, if the CVS Agreement proceeds.

5. Participating Subdivisions agree to instruct their counsel to treat information, work product and expert materials as confidential under Rule 1.6 of the ABA Model Rules of Professional Conduct. Accordingly, an Attorney shall not share information or work product with, or experts or materials to, non-participants (other than the Attorney's own current clients or their lawyers, consultants, experts or other representatives or agents). However, nothing herein shall prevent MDL Leadership or PEC Counsel from fulfilling their obligations in any MDL and the MDL Court Order.

III. Miscellaneous

A. *Termination*. If the CVS Agreement does not proceed past the Reference Date, whether because CVS does not determine to proceed or for any other reason, this Fee Agreement shall be null and void, CVS shall have no obligation to make any payments under this Fee Agreement, and CVS and the MDL PEC shall take such steps as are necessary to restore the *status quo ante.*

1. *MDL Court Consideration.* This Fee Agreement shall be attached as an exhibit to the CVS Agreement. This Fee Agreement shall also be submitted by CVS and the MDL PEC to the MDL Court for approval pursuant to the motion and order that shall be attached. The MDL Court shall have no authority to increase the payments made by CVS under this Fee Agreement beyond the amounts described in this Fee Agreement.

2. In the event that the MDL Court, through an order, makes any change to the Fee Panel's consideration of the factors set forth in paragraph II.C.4, or any other material change to the draft Order attached as part of Exhibit B or the terms of this Fee Agreement, CVS and the MDL PEC shall meet and confer concerning such changes.

3. If CVS and the MDL PEC are unable to reach agreement and revisions to this Fee Agreement, this Fee Agreement shall be null and void, CVS shall have no obligation to make any payments under this Fee Agreement, and CVS and the MDL PEC shall take such further steps as are necessary to restore the *status quo ante.*

B. *Amendment*. Once the MDL Court has entered an order implementing this Fee Agreement, this Fee Agreement can only be amended by (1) written agreement of CVS and the MDL PEC and (2) approval by the MDL Court.

C. *Jurisdiction and Enforcement.* The MDL Court shall have exclusive and ongoing jurisdiction over the enforcement and implementation of this Fee Agreement as set forth herein. The MDL PEC shall be the Authorized Party to enforce this Fee Agreement, as to the payment obligations of CVS as set forth in this Fee Agreement and as to Attorneys making application to the Funds under this Fee Agreement. Solely for purposes of assessing or allocating common benefit fees, the MDL Court will continue to have jurisdiction over the work product developed in the MDL Court by and under the direction of the MDL PEC with respect to claims against CVS, including data and documents, depositions, expert reports, briefs and pleadings; and the MDL Court's protective orders, management orders, and other decisions regarding such discovery and other work product, including but not limited to, conditions on its use, will continue in full force and effect. Nothing in this paragraph authorizes the MDL Court to act contrary to this Agreement, or provides the MDL Court with jurisdiction over the CVS Agreement.

Description of Mathematical Model for the Allocation of the Contingency Fee Funds

CVS Settlement Agreement

This document describes the Mathematical Model for allocation of the Contingency Fee Fund described in Exhibit R (Agreement of Attorneys' Fees, Costs, and Expenses) to the CVS Settlement Agreement.[4] Awards of fees from the Contingency Fee Funds shall be available to Attorneys with Qualifying Representations of Participating Litigating Subdivisions eligible to receive an allocation under the CVS Settlement Agreement.[5] A Fee Panel shall oversee the application of the Model and resolve any questions or disputes concerning the eligibility of a counsel to participate. The Panel is empowered to hear disputes concerning and ensure the accuracy of the mathematical calculations.

In general terms, allocation of the Contingency Fee Fund shall be made by (1) determining the amount of the Settlement Fund that is attributable to each Participating Litigating Subdivision; (2) making certain adjustments to these amounts based on when the Subdivision filed suit and the terms of the applicable fee contract; and (3) dividing the Contingency Fee Fund proportionately among counsel for each Participating Litigating Subdivision based on the amounts calculated in subpart 2.

To collect a fee award from the Contingency Fee Fund, a Participating Litigating Subdivision must have named CVS (or any Released Entity) in its lawsuit. The total maximum amount of the Contingency Fee Fund in the CVS Settlement Agreement is $200,246,377.60.[6]

Allocation of the Contingency Fee Fund shall be made according to the following steps. These calculations are made only for purpose of determining the percentage share of the Contingency Fee Fund that Attorneys for each Participating Litigating Subdivision should receive, ***not*** for determining the dollar amount each Subdivision will receive.

(1) For each Settling State, attribute 50% of the settlement funds for that State to its Subdivisions according to the Subdivision Allocation Percentage in Exhibit G to the CVS Settlement Agreement.

Illustrative example:

- Assume that State A is allocated 1.00000% of the $4,279,160,837 Remediation amount [see Exhibit M of the CVS Settlement Agreement].
- 50% of the 1% share allocated to State A is $21,395,804.19.
- Assume that, per Exhibit G of the Agreement, the Subdivision Allocation

[4] *See* CVS Settlement Agreement, Exhibit R § II.D.2.
[5] CVS Settlement Agreement, Exhibit R § II.D.2.
[6] CVS Settlement Agreement, Exhibit R § II.A.1 & II.D.1.

Percentage for City B in State A is 1.00000000%.

- For purposes of determining its counsel's share of the Contingency Fee Fund, City B is attributed 1.00000000% of $21,395,804.19, or $213,958.04.

(2) Adjust the amounts in paragraph 1 as follows:

a. *Upward Adjustment for Early Filers.* Increase the amount calculated in paragraph 1 above by 10% for any Litigating Subdivision that named CVS in a suit before December 5, 2017, the date the National Prescription Opiate Litigation MDL was formed. If the Litigating Subdivision did not name CVS in a suit before December 2, 2022, then fees from the Contingency Fee Fund will not be awarded to Attorneys with otherwise Qualifying Representations of that Participating Litigating Subdivision.

Illustrative Example:

- Assume City C is attributed $1,000,000 under paragraph 1 above.
- If City C named CVS before 12/5/2017, the attributed amount would be adjusted to $1,100,000.

b. *Determine Amount Due under Contingency Fee Contract.* Determine the amount that would be due to Attorneys with Qualifying Representations of each Participating Litigating Subdivision under the terms of the applicable fee contract if the Participating Litigating Subdivision were to receive the amount calculated in paragraph 2.a. This amount can be referred to as the Contingency Fee Assumption.

Illustrative Example:

- Continuing the example given in paragraph 2.a, if Attorneys have a 20% contingency fee contract with City C for the relevant litigation, the amount calculated in this step would be 20% of $1,100,000, or $220,000.

In the next step, the Contingency Fee Assumption is used to determine the percentage share of the Contingency Fee Fund due to Attorneys for each Participating Litigating Subdivision.

(3) Divide the Contingency Fee Fund proportionately among Attorneys for each Participating Litigating Subdivision in two ways:

a. *National Fee Pool Calculation.* Determine each Litigating Subdivision's

percentage share of all amounts due under contingency fee contracts nationwide by dividing the Contingency Fee Assumption calculated for each Subdivision in paragraph 2.b by the sum of all Contingency Fee Assumptions. Then multiply that percentage by the Contingency Fee Fund to figure each Subdivision's dollar share of the Contingency Fee Fund (but only if the Subdivision timely named CVS in a lawsuit).

Illustrative example:

- $220,000 [from para. 2.b] ÷ $220,000,000 [total amount owed under contingency fee contracts nationwide] = 0.1%[7]
- 0.1%* $200,246,377.60 [Contingency Fee Fund] = $200,246.38

b. *Separate State Fee Pools Calculation.* Determine each Litigating Subdivision's percentage share of all amounts due under contingency fee contracts statewide by dividing the Contingency Fee Assumption calculated for each Subdivision in paragraph 2.b by the sum of all Contingency Fee Assumptions in the same State. Then multiply that percentage by the portion of the Contingency Fee Fund that corresponds to that State's Overall Allocation Percentage, shown in Exhibit F of the CVS Settlement Agreement, to figure each Subdivision's dollar share of the Contingency Fee Fund (but only if the Subdivision timely named CVS in a lawsuit).

Illustrative example:

- 1% * $200,246,377.60 = $2,002,463.78 [amount of the Contingency Fee Fund corresponding to State A]
- Assume a total of $2,500,000 is owed under contingency fee contracts for State A.
- $220,000 [from para. 2.b] ÷ $2,500,000 = 8.8%
- 8.8% * $2,002,463.78 = $176,216.81

The award of fees to Attorneys with Qualifying Representations of Participating Litigating Subdivisions will be the average of the final amounts calculated in paragraphs 3.a and 3.b above, less any amounts the Fee Panel is authorized to, and does, withhold.[8]

Paragraph 3.a represents allocation based on a proportional share of a National Fee Pool,

[7] In this example, $220 million is the amount theoretically owed under all contingency fee contracts for litigation against CVS as calculated in paragraph 2.b. This amount is illustrative only; the actual amount will not be known until all litigating subdivisions are identified and the terms of their contingency fee contracts are collected.

[8] The model also enforces a maximum fee award of 20% of the amount calculated in paragraph 2.b. The description in this document of the Mathematical Model is by necessity an abstraction; the precise contours of the calculations are defined in the model itself.

while paragraph 3.b represents allocation based on a proportional share of the Separate State Fee Pools. In other words, for the National Fee Pool described above in paragraph 3.a, the contingency fee contract rate is compared to all other contingency fee contract rates in the nation. For the Separate State Fee Pools described above in paragraph 3.b, the contingency fee contract terms are compared to the other contingency fee contract terms in that same State. The National Fee Pool and the Separate State Fee Pools are given equal weighting.

Using the first methodology, Attorneys for two Subdivisions in different States with the same amount calculated under paragraph 2.b would be assigned the same amount under paragraph 3.a. Using the second methodology, Attorneys for the same two Subdivisions would be assigned different amounts under paragraph 3.b because they are in different States. Specifically, the Subdivision in the State with a smaller proportion of Participating Litigating Subdivisions would be allocated more than the Subdivision in the State with a greater proportion of Participating Litigating Subdivisions.

By: _____

Name:

Date: _____

On behalf of CVS

By: _____

Name: Paul T. Farrell, Jr.

Date: _____

By: _____

Name: Jayne Conroy

Date: _____

By: _____

Name: Joseph F. Rice

Date: _____

On behalf of Plaintiffs' Executive Committee

EXHIBIT S

Agreement on the State Outside Counsel Fee Fund for Chain Pharmacy Settlements

1. **Definitions**.

   a. "Chain Pharmacy" means any of CVS, Walgreens, and Walmart, and "Chain Pharmacies" means all of the foregoing.
   b. "Multistate Chain Pharmacy Settlement Agreement" means This Settlement Agreement along with any other settlement of opioids-related claims among 30 or more states and a Chain Pharmacy.
   c. "This Settlement Agreement" means the settlement agreement between the Settling States and the Chain Pharmacy to which this Agreement is attached as an Exhibit.
   d. "Settling Chain Pharmacy" means the Chain Pharmacy that is a party to This Settlement Agreement.
   e. "Settling States" has the meaning given such term in the relevant Multistate Chain Pharmacy Settlement Agreement.

2. **Creation of a State Outside Counsel Chain Pharmacies Fee Fund.** The Settling States have agreed to the creation of a state outside counsel fee fund to pay reasonable attorneys' fees of Settling States which have retained outside counsel in connection with litigation against one or more Chain Pharmacies (such fund, the "State Outside Counsel Chain Pharmacies Fee Fund").

3. **State Outside Counsel Chain Pharmacies Fee Fund Administration.** The State Outside Counsel Chain Pharmacies Fee Fund shall be administered separately from any other funds for the payment of attorneys fees or costs in connection with This Settlement Agreement, including any common benefit fund, contingency fee fund for subdivision counsel, state cost fund, or MDL expense fund. If necessary, a committee of Attorneys General shall be convened to oversee the State Outside Counsel Chain Pharmacies Fee Fund (the "Chain Pharmacies Fee Fund Committee"). The Chain Pharmacies Fee Fund Committee shall be appointed by the Settling State Members of the Enforcement Committee and shall be comprised solely of Attorneys General of Settling States that engaged outside counsel to pursue litigation against one or more Chain Pharmacies. The Settlement Fund Administrator (the "Fee Fund Administrator") shall administer the State Outside Counsel Chain Pharmacies Fee Fund according to this Exhibit and, if convened, the guidelines and directives of the Chain Pharmacies Fee Fund Committee.

4. **State Outside Counsel Chain Pharmacies Fee Eligibility.**

   a. To receive any amount from the State Outside Counsel Chain Pharmacies Fee Fund, an outside counsel to a Settling State must have filed and maintained an

action in the name of a Settling State or its Attorney General against a Chain Pharmacy in a state or federal court as of November 1, 2022. No Settling State (or its outside counsel) shall receive funds from both the State Outside Counsel Chain Pharmacies Fee Fund and any "Additional Remediation Amount" as may be provided for in This Settlement Agreement.

b. In addition to the eligibility criteria set forth in Paragraph 4.a, above, and for the avoidance of doubt, only Settling States under This Settlement Agreement are eligible to receive any funds paid into the State Outside Counsel Chain Pharmacies Fee Fund as a result of This Settlement Agreement.

5. **State Outside Counsel Chain Pharmacies Fee Fund Amount.** The Settling Chain Pharmacy shall pay funds into the State Outside Counsel Chain Pharmacies Fee Fund in an amount equal to, and on the schedule identified in, Exhibit M (the "Contribution"). The Settling Chain Pharmacy's Contribution shall subject to a reduction as described in Paragraph 8, below.

6. State Outside Counsel Chain Pharmacies Fee Fund Availability and Calculation of Amount.

a. The State Outside Counsel Chain Pharmacies Fee Fund shall be available to compensate private outside counsel for Settling State Attorneys General for approved fees arising out of representation of the Settling State pursuant to the schedule attached to this agreement as Schedule I (the "Fee Schedule").

b. The Fee Schedule is intended to reflect the fee calculation in subparagraph 6.c, below (the "Fee Calculation"). Subject to adjustments required by Paragraph 8, below, in the event of any discrepancy between the Fee Schedule and the Fee Calculation, the Fee Schedule shall control. Each Settling State, by becoming a Participating State in This Settlement Agreement, agrees that the Fee Schedule reflects the Fee Calculation and waives any right to contest the accuracy of the Fee Schedule, absent manifest error, the exclusion of a Settling State, or the inclusion of a Non-Settling State. The version of the Fee Schedule reflecting any necessary adjustments shall be the "Final Fee Schedule."

c. Fees shall be aggregated across the Multistate Chain Pharmacy Settlement Agreements and be calculated by adding two components: (a) a fixed amount consisting of fifty percent (50%) of the amount of remediation funds allocated to a Settling State and its Subdivisions pursuant to the Multistate Chain Pharmacy Settlement Agreements multiplied by 4.5% (or, if lower, the applicable contingency fee percentage in the Settling State's outside counsel contract); and (b) a proportional percentage of the remaining fee due under that Settling State's contract with its outside counsel assuming that fifty percent (50%) of the Settling State's recovery is allocable to a Settling State (rather than allocable to the Settling State's Participating Subdivisions) so that the fees of all eligible Settling States (minus the fixed amount that would have been allocated to any Non-Settling States had they become Settling States)

exhausts the State Outside Counsel Chain Pharmacies Fee Fund. The proportional share percentage will be the same for each Settling State included in the State Outside Counsel Chain Pharmacies Fee Fund. Fees shall be split proportionally among each Multistate Chain Pharmacy Settlement Agreement, as set forth on the Fee Schedule.

d. All amounts paid will be less any costs or fees of the Fee Fund Administrator. The Fee Schedule reflects a holdback amount of $50,000 for such administrative expenses of the Fee Fund Administrator. The remainder of any unused administrative expenses shall be disbursed pro rata to States receiving monies from the State Outside Counsel Chain Pharmacies Fee Fund at the conclusion of such administration.

7. **Payment by the Fee Fund Administrator**.

a. The Fee Fund Administrator shall hold the Contribution in escrow until the earlier of (1) the last of the three Multistate Chain Pharmacy Settlement Agreements becomes effective or (2) when instructed by the Settling State Members of the Enforcement Committee.

b. Subject to eligibility pursuant to Paragraph 4, above, a Settling State's outside counsel may receive funds from the State Outside Counsel Chain Pharmacies Fee Fund in the following scenarios ("Payment Scenarios"):

1. The Settling State's outside counsel agrees that the amount listed for such state on the Final Fee Schedule either satisfies in full or exceeds the amounts owed to all such Settling State's outside counsel and such counsel has provided written notice waiving all entitlement to additional fee in respect of any Multistate Chain Pharmacy Settlement Agreement.
2. The Settling State and its outside counsel enter into a signed writing establishing the amount owed to the counsel, which includes an agreement on the payment of the amount listed for such state on the Final Fee Schedule and waives any right of the State or its outside counsel to additional amounts from the State Outside Counsel Chain Pharmacies Fee Fund.
3. A final judgment is entered that is no longer appealable, which judgement adjudicates the amount owed to the Settling State's counsel in respect of This Settlement Agreement and directs the Chain Pharmacies Fee Fund Committee how to pay the amount listed on the Final Fee Schedule for such State.

If no Payment Scenario is applicable with respect to a Settling State, then the Settling State's share shall be placed in an interest-bearing escrow account (less reasonable expenses of the Fee Fund Administrator) and held unless and until a Payment Scenario is applicable.

c. Upon the applicability of a Payment Scenario 1 with respect to a Settling State, the Fee Fund Administrator shall pay that Settling State's outside counsel the amount identified on the Final Fee Schedule for such state or

such lesser amount that satisfies the Settling State's obligation to its outside counsel in full. Any remaining allocation to such State shall be paid to the Settling State.

d. Upon the applicability of a Payment Scenario 2 or 3 with respect to a Settling State, the Fee Fund Administrator shall release monies from the State Outside Counsel Chain Pharmacies Fee Fund in either the amount held by the Fee Fund Administrator, if the amount of the agreement or judgment is equal to or more than the amount held, or the amount indicated in the agreement or in the final judgment, if the amount in the agreement or judgment is less than the amount held.

e. Nothing herein, including the amounts listed in Paragraph 6 above or on any Fee Schedule, shall prevent a Settling State from arguing in any proceeding with its outside counsel that (i) its recovery was less than fifty percent (50%) of the recovery in the settlement agreement down to and including fifteen percent (15%) of the total recovery; (ii) any payment should be discounted by an appropriate discount rate commensurate to the risk of the settlement agreement and the timeline that the Settling State is receiving its payments; (iii) the settlement amount should be lower because the amount a Settling State receives was reduced because such Settling State's outside counsel failed to obtain joinder from a Settling State's Subdivision(s) that the outside counsel also represented; or (iv) any limitation placed by the Settling Chain Pharmacy bars payment of a higher fee to outside counsel.

f. In the event the amount due to the Settling State's outside counsel from an escrow account is less than the total amount of funds escrowed on the account of the Settling State, the balance shall be paid to the Settling State. In no event, other than a State becoming a Non-Settling State, shall funds revert to a Chain Pharmacy.

8. **Reduction of Amounts owed**

a. **Non-Settling States; Reversion and Redistribution.** Amounts owed by the Settling Chain Pharmacy to the State Outside Counsel Chain Pharmacies Fee Fund shall be reduced by amounts allocated to the fixed amount for such State under This Settlement Agreement in the event that a listed State becomes a Non-Settling State. Specifically, the reduction in the amount owed by the Settling Chain Pharmacy shall be calculated as 2.25% times the total Remediation Payments that would have been allocated to the Non-Settling State had it been a Settling State. The payments for the other Settling States reflected in the Fee Schedule shall be adjusted by the Fee Fund Administrator to reflect a recalculated proportional percentage under the Fee Calculation.

b. **Settling States; Redistribution**. If a Settling State under This Settlement Agreement (i) would otherwise be entitled to a payment from the State Outside Counsel Chain Pharmacies Fee Fund and (ii) is eligible to be a "Settling State" under either of the two other Multistate Chain Pharmacy

Settlement Agreements but does not become such a "Settling State", then that Settling State's payment from the State Outside Counsel Chain Pharmacies Fee Fund shall be reduced to an amount equal to the Contribution times the Settling State's allocation percentage on Exhibit F, which shall be treated as an additional remediation payment in lieu of a fee payment. The payments for the other Settling States reflected in the Fee Schedule shall be adjusted by the Fee Fund Administrator to reflect a recalculated proportional percentage under the Fee Calculation.

c. If either or both of the other Chain Pharmacies fail to enter into a Multistate Chain Pharmacy Settlement Agreement, or if such Multistate Chain Pharmacy Settlement Agreements fail to take effect by December 15, 2023, then the Settling Chain Pharmacy and the Enforcement Committee shall renegotiate the terms of Paragraph 8.b in order to permit prompt payment to Settling States that terminated contested litigation with the Settling Chain Pharmacy, and permitting additional time if necessary to finalize payments to the other Settling States. In no event will such renegotiation result in additional reversion of monies in the State Outside Counsel Chain Pharmacies Fee Fund to the Settling Chain Pharmacy.

9. **Interpretation**.

a. This Agreement shall be an Exhibit to each Multistate Chain Pharmacy Settlement Agreement and shall include the Fee Schedule setting forth the presumptive payment calculations for each eligible Settling State. By joining This Settlement Agreement, each State agrees on the presumptive accuracy of the Fee Schedule, absent manifest error, the inclusion of a Non-Settling State, or the exclusion of a Settling State.

b. It is the intent of all parties that the State Outside Counsel Chain Pharmacies Fee Fund function in a similar manner, with similar calculations and mechanics, as the "State Outside Counsel Fee Fund" established in Exhibit S of that certain settlement agreement dated as of July 21, 2021 setting forth the terms of settlement between and among McKesson Corporation, Cardinal Health, Inc., and AmerisourceBergen Corporation, on the one hand, and certain settling states and certain participating subdivisions, on the other hand.

Schedule I to Exhibit S

Fee Schedule

[This Fee Schedule is subject to adjustment pursuant to Paragraph 6.b of Exhibit S)]

State	Total Fee	Walgreens Share	Walmart Share	CVS Share
Alaska	$1,851,826.21	$691,943.15	$416,884.80	$742,998.26
Arkansas	$4,873,566.77	$1,821,030.03	$1,097,141.78	$1,955,394.96
Delaware	$3,726,440.37	$1,392,401.12	$838,899.65	$1,495,139.61
Kentucky	$7,773,195.40	$2,904,489.25	$1,749,908.82	$3,118,797.34
Michigan	$22,162,404.67	$8,281,081.68	$4,989,220.69	$8,892,102.29
Mississippi	$4,641,790.38	$1,734,425.75	$1,044,964.07	$1,862,400.56
Nevada	$9,363,802.33	$3,498,826.64	$2,107,987.70	$3,756,987.99
New Hampshire	$5,985,080.61	$2,236,352.15	$1,347,366.79	$2,401,361.67
New Mexico	$2,748,895.55	$2,748,895.55	$-	$-
Puerto Rico	$6,893,516.73	$2,575,793.38	$1,551,874.76	$2,765,848.60
South Dakota	$1,101,349.40	$411,524.13	$247,936.78	$441,888.49
Utah	$2,884,152.67	$1,204,171.82	$603,818.18	$1,076,162.67
West Virginia	$2,399,292.74	$2,399,292.74	$-	$-
	Admin Expense Holdback	$20,875.66	$10,467.86	$18,656.48
	Total	$31,921,103.05	$16,006,471.88	$28,527,738.91

Excluded States:

- Florida (Walgreens; Walmart; CVS)
- New Mexico (Walmart; CVS)
- West Virginia (Walmart; CVS)

EXHIBIT T

Agreement on the Joint State Cost Fund

1. **Definitions**.

   a. "Opioids Defendant" means Walmart, or such other defendant in opioids-related litigation that enters into a Multistate Settlement after November 1, 2022, and "Opioids Defendants" means all of the foregoing.

   b. "Multistate Settlement" means this Settlement Agreement along with any other settlement of opioids-related claims among 30 or more states and an Opioids Defendant.

   c. "Settlement Agreement" means the settlement agreement between the Settling States and the Opioids Defendant to which this Agreement is attached as an Exhibit.

   d. "Settling Opioids Defendant" means the Opioids Defendant that is a party to the Settlement Agreement.

   e. "Settling States" has the meaning given such term in the Settlement Agreement.

2. **Creation of a State Cost Fund.** The Settling Opioids Defendant and the Settling States agree to the creation of a fund to pay costs and expenses associated with litigation and investigations related to the opioids litigation (such fund, the "State Cost Fund"). The State Cost Fund shall be administered separately from any other funds for the payment of attorneys fees or costs in connection with the Settlement Agreement, including any common benefit fund, contingency fee fund for subdivision counsel, subdivision cost fund, or MDL expense fund. However, the State Cost Fund shall be administered jointly with similar "State Cost Funds" created in other Multistate Settlements after November 1, 2022; any state cost funds jointly administered in this manner shall be referred to as the "Joint State Cost Fund." To the extent permissible and feasible, the Joint State Cost Fund may also be jointly administered with any fund for reimbursement of states' litigation and investigation costs established by a bankruptcy plan, including the Mallinckrodt bankruptcy plan, any plans that may emerge from the bankruptcies of Purdue and Endo, and any similar bankruptcies of opioids defendants. To the extent feasible, the Joint State Cost Fund may also be jointly administered with the State Cost Funds established pursuant to the Distributors Multistate Settlement and the Janssen Multistate Settlement.

3. **State Cost Fund Amount.** The Settling Opioids Defendant shall pay into the State Cost Fund in the amount listed on, and on the schedule set forth in, Exhibit M (the "Settling Opioids Defendant's Contribution") for the purpose paying States' costs and expenses associated with to the opioid litigation.

4. **Joint State Cost Fund Committee.** A committee of Attorneys General or their designated

representatives (such committee, the "Joint State Cost Fund Committee") shall oversee the Joint State Cost Fund. The committee shall be appointed by the Settling State Members of the Enforcement Committee, who shall aim to (i) have equal representation between states that retained contingency fee outside counsel and states that did not retain contingency fee outside counsel with respect to opioids-related litigation, and (ii) maintain consistency of committee membership across state cost funds that compose the Joint State Cost Fund. The Settling State Members of the Enforcement Committee may by majority vote add to or change the composition of the Joint State Cost Fund Committee.

5. **Joint State Cost Fund Administrator.**

a. The Joint State Cost Fund Committee may select an administrator (the "Joint State Cost Fund Administrator"), who shall administer the Joint State Cost Fund and direct payments to Settling States according to the guidelines and directives of the Joint State Cost Fund Committee. While the expenses of the Joint State Cost Fund Administrator shall be reimbursable pursuant to the principles and guidelines listed below, the Joint State Cost Fund Administrator shall first rely on any separate funds that may be set aside for such purpose in any Multistate Settlement.

b. The Joint State Cost Fund Administrator shall be responsible, under the direction and supervision of the Joint State Cost Fund Committee, for receiving and reviewing applications for reimbursement from the Joint State Cost Fund. This may include the creation of an audit process to ensure the integrity of submissions, as well as reimbursement rules to incentivize accurate submissions.

6. **State Cost Fund Guidelines and Principles.**

a. Monies in the State Cost Fund shall be released without any delay to reimburse Settling States for documented costs incurred or paid in connection with litigation and investigation related to the opioid litigation.

b. In allocating the Joint State Cost Fund, the Joint State Cost Fund Committee shall seek to comply with the following principles:

1. Each State Cost Fund should be used to reimburse costs incurred by States that are Settling States in the Multistate Settlement from which funds are paid. (However, the foregoing sentence does not preclude a Non-Settling State that joins a separate Multistate Settlement from participating in the Joint State Cost Fund with respect to contributions made by other Opioids Defendants.)

2. Funds in any State Cost Fund shall be primarily used to reimburse costs incurred prior to the date on which the relevant Multistate Settlement was first made available for participation to eligible States. Regardless of other factors considered in prioritizing payments, all costs incurred prior to January 1, 2023, shall be paid

before any costs incurred after that date are paid.

3. The Joint State Cost Fund shall prioritize the reimbursement of the following over reimbursement of any State's litigation or investigation costs:

    - the reasonable costs of the Joint State Cost Fund Administrator;
    - repayment of National Association of Attorneys General grants made in connection with opioid litigation, without regard to when the grants were made;
    - repayment of state-attributable costs of any mediator in connection with negotiations of a Multistate Settlement;

4. The Joint State Cost Fund shall seek to prioritize costs in the following order:

    - litigation-related costs; then
    - investigation-related costs; then
    - settlement and negotiation related costs; then
    - cost shares.

5. Costs incurred by a State's outside counsel that the State is contractually obligated to reimburse shall be treated as costs incurred by a State.

6. As between similar categories of costs (e.g., defendant-specific litigation-related costs), the Joint State Cost Fund shall first reimburse costs incurred by a State's outside counsel that the State is contractually obligated to reimburse out of its recovery, and then reimburse costs directly incurred by States.

7. The Joint State Cost Fund shall be available to reimburse only those costs which have not yet been reimbursed to a State from any other source, including any other fund set aside in a Multistate Settlement or bankruptcy plan for the reimbursement of costs or any individual state settlements.

8. The Joint State Cost Fund should not reimburse expenses that are expected to be reimbursed from another source, such as a bankruptcy debtor, unless such expected reimbursements do not come to fruition within a reasonable amount of time. This includes cost shares paid by states.

9. When coordinating among different state cost funds that each could be used to reimburse a given expense, the Joint State Cost Fund Committee may set guidelines to equitably distribute reimbursements across all state cost funds in a manner that prioritizes costs unlikely to be otherwise reimbursed to a similarly situated State.

10. The Joint State Cost Fund may deny reimbursement of costs, on either an individual basis or a categorical basis, that a supermajority (75%+) of the Joint State Cost Fund Committee determines to be unreasonable.

11. After all costs identified in the foregoing have been reimbursed, the remaining funds in the Joint State Cost Fund shall be distributed to states in proportion to their allocation of remediation payments in the Mallinckrodt bankruptcy plan. Such distribution shall be treated as a reimbursement for States' unenumerated costs of administering the Multistate Settlements and no subdivision shares shall be carved out of such disbursement, nor shall any attorney's fees be assessed against such distribution (unless individually agreed to by a State).

c. In applying the foregoing principles, the Joint State Cost Fund Committee shall have the discretion to vary their application in order to ensure equity among similarly situated states and to facilitate the ease and speed of administering the Joint State Cost Fund. The Joint State Cost Fund Committee may also apply percentages to approximate costs attributable to a particular Opioids Defendant (or categories of Opioids Defendants) in a manner that seeks to treat similarly situated states equitably.

d. The Joint State Cost Fund Committee shall establish guidelines for the submission and approval of expenses eligible for reimbursement from the Joint State Cost Fund, which guidelines may be coordinated and consolidated with any similar cost funds in other state opioid settlements for purposes of joint administration and efficiency.

e. Unless waived by the Joint State Cost Fund Committee, the Joint State Cost Fund Administrator shall, in accordance with such guidelines, receive from Settling States records sufficient to demonstrate the incurrence and payment of each expense.

f. Where the Joint State Cost Fund Committee determines by a supermajority vote (75%+) that outside counsel for a Settling State has failed to exercise reasonable diligence in reviewing submitted costs for allowability, and such failure has resulted in the reimbursement of unallowed costs to such outside counsel, the Committee shall have the discretion to reduce or recover payments made to such outside counsel in an amount calculated to

incentivize the exercise of reasonable diligence.

7. **State Undertakings.** Each State submitting for reimbursement of costs from the Joint State Cost Fund agrees:

a. to only submit costs allowable under this Joint State Cost Fund Agreement;

b. to provide all back-up documentation that may be requested with respect to any submitted cost and to make itself available for any questions related to such costs;

c. to exercise reasonable diligence to ensure that all submitted costs are allowable under (i) this Joint State Cost Fund Agreement, (ii) the State's contract with its outside counsel, if relevant, (iii) state law, and (iv) the policies and procedures applicable to the State's retention of outside counsel, if relevant; and

d. to promptly return any excess payments made to the State or its outside counsel from the Joint State Cost Fund, including payments made for costs that were reimbursed from another source or are not allowable hereunder.

EXHIBIT U

IRS Form 1098-F

0303 ☐ VOID ☐ CORRECTED

FILER'S name, street address, city or town, state or province, country, ZIP or foreign postal code, and telephone no. **[Appropriate Official]** **[Designated State]** **[Address]**	1 Total amount required to be paid $ *	OMB No. 1545-2284 Form **1098-F** (Rev. January 2022)	**Fines, Penalties, and Other Amounts**
	2 Amount to be paid for violation or potential violation $ 0.00	For calendar year 20 23	
FILER'S TIN XX-XXXXXXX PAYER'S TIN 05-0494040	3 Restitution/remediation amount $ *	5 Date of order/agreement XX/XX/2023	**Copy A** **For Internal Revenue Service Center** **File with Form 1096.**
PAYER'S name **CVS Health Corporation**	4 Compliance amount $ 0.00		
Street address (including apt. no.) **One CVS Drive**	6 Court or entity U.S. District Court for the Northern District of Ohio and jurisdictions of other cases settled under the Settlement Agreement entered into by CVS and the Settling States (as defined in such agreement), dated as of [___].		For Privacy Act and Paperwork Reduction Act Notice, see the **current General Instructions for Certain Information Returns.**
City or town, state or province, country, and ZIP or foreign postal code **Woonsocket, RI, USA, 02895**	7 Case number No. 1:17-md-2804 and other cases settled under the Settlement Agreement entered into by CVS and the Settling States (as defined in such agreement), dated as of [___].		
	8 Case name or names of parties to suit, order, or agreement **National Prescription Opiate Litigation**		
	9 Code **A,B**		

Form **1098-F** (Rev. 1-2022) Cat. No. 71382B www.irs.gov/Form1098F Department of the Treasury - Internal Revenue Service

Do Not Cut or Separate Forms on This Page — Do Not Cut or Separate Forms on This Page

*** Amounts to be completed following confirmation of settlement participation.**

EXHIBIT V

CVS Settlement Agreement Sign-On Form

This form indicates whether an Eligible State has determined to become a Settling State under the CVS Settlement Agreement. Each Settling State's Attorney General represents that he or she has obtained (or will obtain no later than the Initial Subdivision Participation Date) the authority set forth in Section XI.G of the CVS Settlement Agreement. Attorneys General of Eligible States that determine to become Settling States are committing to obtaining any necessary additional State releases prior to the Effective Date.

The State/Commonwealth/Territory of_____ has determined:

☐ **to become** or
☐ **not to become**

a Settling State under the CVS Settlement Agreement

_____ _____
Signature Date

_____ _____
Printed Name Title

(1) Primary Contact for Your Office

Name:

Title:

Email:

Direct Phone Number:

(2) Secondary Contact for Your Office

Name:

Title:

Email:

Direct Phone Number:

(3) DEADLINE: SATURDAY, DECEMBER 31, 2022 AT 5:00 PM ET

Please email your completed form to the following:

For CVS:

Alexandra W. Miller
Paul B. Hynes, Jr.
Zuckerman Spaeder LLP
1800 M Street, N.W., Suite 1000
Washington, D.C. 20003
smiller@zuckerman.com
phynes@zuckerman.com

For the Attorneys General:

Josh Stein, Attorney General
North Carolina Department of Justice
Attn: Daniel Mosteller, Deputy General Counsel
PO Box 629
Raleigh, NC 27602
Dmosteller@ncdoj.gov

EXHIBIT W

Non-Litigating Threshold Subdivisions[1]

1. Alexander City city, Alabama
2. Anniston city, Alabama
3. Autauga County, Alabama*
4. Barbour County, Alabama
5. Blount County, Alabama*
6. Butler County, Alabama
7. Center Point city, Alabama
8. Chambers County, Alabama*
9. Choctaw County, Alabama
10. Clarke County, Alabama
11. Clay County, Alabama
12. Cleburne County, Alabama
13. Coosa County, Alabama
14. Covington County, Alabama*
15. Crenshaw County, Alabama
16. Dale County, Alabama*
17. DeKalb County, Alabama*
18. Dothan city, Alabama*
19. Escambia County, Alabama*
20. Etowah County, Alabama*
21. Eufaula city, Alabama
22. Fairfield city, Alabama
23. Fort Payne city, Alabama
24. Geneva County, Alabama
25. Hale County, Alabama
26. Henry County, Alabama
27. Houston County, Alabama*
28. Lee County, Alabama*
29. Leeds city, Alabama
30. Limestone County, Alabama*
31. Macon County, Alabama
32. Madison city, Alabama*
33. Monroe County, Alabama
34. Montgomery city, Alabama*
35. Montgomery County, Alabama*
36. Muscle Shoals city, Alabama
37. Oxford city, Alabama
38. Pell City city, Alabama
39. Russell County, Alabama*
40. Scottsboro city, Alabama
41. Shelby County, Alabama*
42. St. Clair County, Alabama*
43. Sumter County, Alabama
44. Tallapoosa County, Alabama*
45. Washington County, Alabama
46. Anchorage municipality, Alaska*
47. Fairbanks city, Alaska*
48. Fairbanks North Star Borough, Alaska*
49. Juneau city and borough, Alaska*
50. Kenai Peninsula Borough, Alaska*
51. Matanuska-Susitna Borough, Alaska*
52. Apache County, Arizona*
53. Apache Junction city, Arizona*
54. Avondale city, Arizona*
55. Buckeye city, Arizona*
56. Bullhead City city, Arizona*
57. Casa Grande city, Arizona*
58. Chandler city, Arizona*
59. Coconino County, Arizona*
60. El Mirage city, Arizona*
61. Flagstaff city, Arizona*
62. Fountain Hills town, Arizona
63. Gila County, Arizona*
64. Gilbert town, Arizona*
65. Glendale city, Arizona*
66. Goodyear city, Arizona*
67. Graham County, Arizona*
68. La Paz County, Arizona
69. Lake Havasu City city, Arizona*
70. Marana town, Arizona*
71. Maricopa city, Arizona*
72. Mesa city, Arizona*

[1] Entities denoted with an asterisk (*) indicate a population of greater than 30,000.

73. Oro Valley town, Arizona*
74. Peoria city, Arizona*
75. Pima County, Arizona*
76. Pinal County, Arizona*
77. Prescott city, Arizona*
78. Prescott Valley town, Arizona*
79. Queen Creek town, Arizona*
80. Sahuarita town, Arizona*
81. San Luis city, Arizona*
82. Santa Cruz County, Arizona*
83. Scottsdale city, Arizona*
84. Sierra Vista city, Arizona*
85. Surprise city, Arizona*
86. Tempe city, Arizona*
87. Tucson city, Arizona*
88. Yavapai County, Arizona*
89. Yuma city, Arizona*
90. Arkadelphia city, Arkansas
91. Arkansas County, Arkansas
92. Ashley County, Arkansas
93. Batesville city, Arkansas
94. Baxter County, Arkansas*
95. Bella Vista city, Arkansas
96. Benton city, Arkansas*
97. Benton County, Arkansas*
98. Bentonville city, Arkansas*
99. Blytheville city, Arkansas
100. Boone County, Arkansas*
101. Bradley County, Arkansas
102. Bryant city, Arkansas
103. Cabot city, Arkansas
104. Camden city, Arkansas
105. Carroll County, Arkansas
106. Centerton city, Arkansas
107. Chicot County, Arkansas
108. Clark County, Arkansas
109. Clay County, Arkansas
110. Cleburne County, Arkansas
111. Columbia County, Arkansas
112. Conway city, Arkansas*
113. Conway County, Arkansas
114. Craighead County, Arkansas*
115. Crawford County, Arkansas*
116. Crittenden County, Arkansas*
117. Cross County, Arkansas
118. Desha County, Arkansas
119. Drew County, Arkansas
120. El Dorado city, Arkansas
121. Faulkner County, Arkansas*
122. Fayetteville city, Arkansas*
123. Forrest City city, Arkansas
124. Fort Smith city, Arkansas*
125. Franklin County, Arkansas
126. Fulton County, Arkansas
127. Garland County, Arkansas*
128. Grant County, Arkansas
129. Greene County, Arkansas*
130. Harrison city, Arkansas
131. Helena-West Helena city, Arkansas
132. Hempstead County, Arkansas
133. Hot Spring County, Arkansas*
134. Hot Springs city, Arkansas*
135. Howard County, Arkansas
136. Independence County, Arkansas*
137. Izard County, Arkansas
138. Jackson County, Arkansas
139. Jacksonville city, Arkansas
140. Jefferson County, Arkansas*
141. Johnson County, Arkansas
142. Jonesboro city, Arkansas*
143. Lawrence County, Arkansas
144. Lincoln County, Arkansas
145. Little River County, Arkansas
146. Little Rock city, Arkansas*
147. Logan County, Arkansas
148. Lonoke County, Arkansas*
149. Madison County, Arkansas
150. Magnolia city, Arkansas
151. Malvern city, Arkansas
152. Marion city, Arkansas
153. Marion County, Arkansas
154. Maumelle city, Arkansas
155. Miller County, Arkansas*
156. Mississippi County, Arkansas*
157. Mountain Home city, Arkansas
158. North Little Rock city, Arkansas*

159. Ouachita County, Arkansas
160. Paragould city, Arkansas
161. Perry County, Arkansas
162. Phillips County, Arkansas
163. Pike County, Arkansas
164. Pine Bluff city, Arkansas*
165. Poinsett County, Arkansas
166. Polk County, Arkansas
167. Pope County, Arkansas*
168. Pulaski County, Arkansas*
169. Randolph County, Arkansas
170. Rogers city, Arkansas*
171. Russellville city, Arkansas
172. Saline County, Arkansas*
173. Scott County, Arkansas
174. Searcy city, Arkansas
175. Sebastian County, Arkansas*
176. Sevier County, Arkansas
177. Sharp County, Arkansas
178. Sherwood city, Arkansas*
179. Siloam Springs city, Arkansas
180. Springdale city, Arkansas*
181. St. Francis County, Arkansas
182. Stone County, Arkansas
183. Texarkana city, Arkansas
184. Union County, Arkansas*
185. Van Buren city, Arkansas
186. Van Buren County, Arkansas
187. Washington County, Arkansas*
188. West Memphis city, Arkansas
189. White County, Arkansas*
190. Yell County, Arkansas
191. Adelanto city, California*
192. Alameda city, California*
193. Alhambra city, California*
194. Aliso Viejo city, California*
195. Antioch city, California*
196. Apple Valley town, California*
197. Arcadia city, California*
198. Atascadero city, California*
199. Azusa city, California*
200. Bakersfield city, California*
201. Baldwin Park city, California*
202. Banning city, California*
203. Beaumont city, California*
204. Bell city, California*
205. Bell Gardens city, California*
206. Bellflower city, California*
207. Berkeley city, California*
208. Beverly Hills city, California*
209. Brea city, California*
210. Brentwood city, California*
211. Buena Park city, California*
212. Burbank city, California*
213. Burlingame city, California*
214. Calexico city, California*
215. Camarillo city, California*
216. Campbell city, California*
217. Carlsbad city, California*
218. Carson city, California*
219. Cathedral City city, California*
220. Ceres city, California*
221. Cerritos city, California*
222. Chino city, California*
223. Chino Hills city, California*
224. Citrus Heights city, California*
225. Claremont city, California*
226. Clovis city, California*
227. Coachella city, California*
228. Colton city, California*
229. Compton city, California*
230. Concord city, California*
231. Contra Costa County, California*
232. Corona city, California*
233. Covina city, California*
234. Culver City city, California*
235. Cupertino city, California*
236. Cypress city, California*
237. Daly City city, California*
238. Dana Point city, California*
239. Danville town, California*
240. Davis city, California*
241. Delano city, California*
242. Diamond Bar city, California*
243. Downey city, California*
244. Eastvale city, California*

245. El Cajon city, California*
246. El Centro city, California*
247. El Monte city, California*
248. El Paso de Robles (Paso Robles) city, California*
249. Elk Grove city, California*
250. Escondido city, California*
251. Fairfield city, California*
252. Folsom city, California*
253. Fontana city, California*
254. Foster City city, California*
255. Fountain Valley city, California*
256. Fremont city, California*
257. Fresno city, California*
258. Garden Grove city, California*
259. Gardena city, California*
260. Gilroy city, California*
261. Glendale city, California*
262. Glendora city, California*
263. Glenn County, California
264. Goleta city, California*
265. Hanford city, California*
266. Hawthorne city, California*
267. Hayward city, California*
268. Hemet city, California*
269. Hesperia city, California*
270. Highland city, California*
271. Hollister city, California*
272. Huntington Park city, California*
273. Indio city, California*
274. Inglewood city, California*
275. Irvine city, California*
276. Jurupa Valley city, California*
277. Kern County, California*
278. Kings County, California*
279. La Mirada city, California*
280. La Puente city, California*
281. La Quinta city, California*
282. La Verne city, California*
283. Laguna Hills city, California*
284. Laguna Niguel city, California*
285. Lake County, California*
286. Lake Elsinore city, California*
287. Lake Forest city, California*
288. Lakewood city, California*
289. Lancaster city, California*
290. Lawndale city, California*
291. Lincoln city, California*
292. Livermore city, California*
293. Lodi city, California*
294. Lompoc city, California*
295. Long Beach city, California*
296. Los Altos city, California*
297. Los Banos city, California*
298. Los Gatos town, California*
299. Lynwood city, California*
300. Madera city, California*
301. Manhattan Beach city, California*
302. Manteca city, California*
303. Martinez city, California*
304. Menifee city, California*
305. Menlo Park city, California*
306. Merced city, California*
307. Milpitas city, California*
308. Mission Viejo city, California*
309. Modesto city, California*
310. Monrovia city, California*
311. Montclair city, California*
312. Montebello city, California*
313. Monterey Park city, California*
314. Moorpark city, California*
315. Moreno Valley city, California*
316. Morgan Hill city, California*
317. Mountain View city, California*
318. Napa city, California*
319. National City city, California*
320. Newark city, California*
321. Newport Beach city, California*
322. Norwalk city, California*
323. Novato city, California*
324. Oakland city, California*
325. Oakley city, California*
326. Oceanside city, California*
327. Ontario city, California*
328. Orange city, California*
329. Orange County, California*

330. Pacifica city, California*
331. Palm Desert city, California*
332. Palm Springs city, California*
333. Palmdale city, California*
334. Palo Alto city, California*
335. Paramount city, California*
336. Pasadena city, California*
337. Perris city, California*
338. Petaluma city, California*
339. Pico Rivera city, California*
340. Pittsburg city, California*
341. Pleasant Hill city, California*
342. Pleasanton city, California*
343. Pomona city, California*
344. Porterville city, California*
345. Poway city, California*
346. Rancho Cordova city, California*
347. Rancho Cucamonga city, California*
348. Rancho Palos Verdes city, California*
349. Rancho Santa Margarita city, California*
350. Redding city, California*
351. Redlands city, California*
352. Redondo Beach city, California*
353. Redwood City city, California*
354. Rialto city, California*
355. Richmond city, California*
356. Riverside city, California*
357. Rocklin city, California*
358. Rohnert Park city, California*
359. Rosemead city, California*
360. Roseville city, California*
361. Salinas city, California*
362. San Benito County, California*
363. San Bernardino city, California*
364. San Bruno city, California*
365. San Buenaventura (Ventura) city, California*
366. San Carlos city, California*
367. San Diego city, California*
368. San Dimas city, California*
369. San Francisco city / San Francisco County, California*
370. San Gabriel city, California*
371. San Jacinto city, California*
372. San Joaquin County, California*
373. San Juan Capistrano city, California*
374. San Luis Obispo city, California*
375. San Marcos city, California*
376. San Mateo city, California*
377. San Mateo County, California*
378. San Pablo city, California*
379. San Rafael city, California*
380. San Ramon city, California*
381. Santa Barbara city, California*
382. Santa Barbara County, California*
383. Santa Clara city, California*
384. Santa Clarita city, California*
385. Santa Cruz city, California*
386. Santa Maria city, California*
387. Santa Monica city, California*
388. Santa Rosa city, California*
389. Santee city, California*
390. Saratoga city, California*
391. Seaside city, California*
392. Simi Valley city, California*
393. Siskiyou County, California*
394. Solano County, California*
395. South Gate city, California*
396. South San Francisco city, California*
397. Stanislaus County, California*
398. Stanton city, California*
399. Stockton city, California*
400. Sunnyvale city, California*
401. Temecula city, California*
402. Temple City city, California*
403. Thousand Oaks city, California*
404. Torrance city, California*
405. Tracy city, California*
406. Turlock city, California*
407. Tustin city, California*
408. Union City city, California*

409. Upland city, California*
410. Vacaville city, California*
411. Vallejo city, California*
412. Victorville city, California*
413. Visalia city, California*
414. Vista city, California*
415. Walnut Creek city, California*
416. Watsonville city, California*
417. West Covina city, California*
418. West Hollywood city, California*
419. West Sacramento city, California*
420. Whittier city, California*
421. Wildomar city, California*
422. Woodland city, California*
423. Yorba Linda city, California*
424. Yuba City city, California*
425. Yucaipa city, California*
426. Alamosa County, Colorado
427. Arvada city, Colorado*
428. Boulder city, Colorado*
429. Castle Rock town, Colorado*
430. Centennial city, Colorado*
431. Chaffee County, Colorado
432. Colorado Springs city, Colorado*
433. Delta County, Colorado*
434. Douglas County, Colorado*
435. Eagle County, Colorado*
436. El Paso County, Colorado*
437. Englewood city, Colorado*
438. Fort Collins city, Colorado*
439. Fountain city, Colorado*
440. Garfield County, Colorado*
441. Grand Junction city, Colorado*
442. La Plata County, Colorado*
443. Lafayette city, Colorado*
444. Lakewood city, Colorado*
445. Las Animas County, Colorado
446. Littleton city, Colorado*
447. Longmont city, Colorado*
448. Loveland city, Colorado*
449. Montrose County, Colorado*
450. Otero County, Colorado
451. Parker town, Colorado*
452. Pueblo city, Colorado*
453. Summit County, Colorado*
454. Weld County, Colorado*
455. Wheat Ridge city, Colorado*
456. Windsor town, Colorado*
457. Ansonia town / Ansonia city, Connecticut
458. Danbury city / Danbury town, Connecticut*
459. Derby city / Derby town, Connecticut
460. Glastonbury town, Connecticut*
461. Greenwich town, Connecticut*
462. Groton town, Connecticut*
463. Hamden town, Connecticut*
464. Hartford city / Hartford town, Connecticut*
465. Manchester town, Connecticut*
466. Meriden city / Meriden town, Connecticut*
467. New Britain town / New Britain city, Connecticut*
468. New Haven town / New Haven city, Connecticut*
469. New London city / New London town, Connecticut
470. Newington town, Connecticut*
471. Norwalk city / Norwalk town, Connecticut*
472. Stamford city / Stamford town, Connecticut*
473. Trumbull town, Connecticut*
474. Wallingford town, Connecticut*
475. West Hartford town, Connecticut*
476. New Castle County, Delaware*
477. Newark city, Delaware*
478. Wilmington city, Delaware*
479. Alpharetta city, Georgia*
480. Bacon County, Georgia
481. Barrow County, Georgia*
482. Berrien County, Georgia
483. Brookhaven city, Georgia*
484. Brooks County, Georgia

485. Brunswick city, Georgia
486. Bryan County, Georgia*
487. Calhoun city, Georgia
488. Canton city, Georgia*
489. Chamblee city, Georgia*
490. Chatham County, Georgia*
491. Colquitt County, Georgia*
492. Coweta County, Georgia*
493. Crawford County, Georgia
494. Dalton city, Georgia*
495. Doraville city, Georgia
496. Douglas County, Georgia*
497. Douglasville city, Georgia*
498. Dunwoody city, Georgia*
499. East Point city, Georgia*
500. Fannin County, Georgia
501. Floyd County, Georgia*
502. Gilmer County, Georgia*
503. Gordon County, Georgia*
504. Grady County, Georgia
505. Harris County, Georgia*
506. Heard County, Georgia
507. Hinesville city, Georgia*
508. Johns Creek city, Georgia*
509. Kennesaw city, Georgia*
510. LaGrange city, Georgia*
511. Lanier County, Georgia
512. Lawrenceville city, Georgia*
513. Marietta city, Georgia*
514. McDonough city, Georgia
515. Meriwether County, Georgia
516. Milton city, Georgia*
517. Moultrie city, Georgia
518. Newnan city, Georgia*
519. Paulding County, Georgia*
520. Peachtree City city, Georgia*
521. Peachtree Corners city, Georgia*
522. Pickens County, Georgia*
523. Pierce County, Georgia
524. Pooler city, Georgia
525. Richmond Hill city, Georgia
526. Roswell city, Georgia*
527. Smyrna city, Georgia*
528. Snellville city, Georgia
529. South Fulton city, Georgia*
530. Statesboro city, Georgia*
531. Stonecrest city, Georgia*
532. Telfair County, Georgia
533. Thomas County, Georgia*
534. Tucker city, Georgia*
535. Valdosta city, Georgia*
536. Villa Rica city, Georgia
537. Walker County, Georgia*
538. Ware County, Georgia*
539. Warner Robins city, Georgia*
540. White County, Georgia*
541. Winder city, Georgia
542. Woodstock city, Georgia*
543. Hawaii County, Hawaii*
544. Honolulu County, Hawaii*
545. Maui County, Hawaii*
546. Bonner County, Idaho*
547. Caldwell city, Idaho*
548. Coeur d'Alene city, Idaho*
549. Idaho Falls city, Idaho*
550. Kootenai County, Idaho*
551. Lewiston city, Idaho*
552. Madison County, Idaho*
553. Meridian city, Idaho*
554. Nampa city, Idaho*
555. Nez Perce County, Idaho*
556. Post Falls city, Idaho*
557. Adams County, Illinois*
558. Addison township, Illinois*
559. Addison village, Illinois*
560. Algonquin township, Illinois*
561. Algonquin village, Illinois*
562. Arlington Heights village, Illinois*
563. Aurora city, Illinois*
564. Aurora township, Illinois*
565. Avon township, Illinois*
566. Bartlett village, Illinois*
567. Batavia township, Illinois*
568. Belleville city, Illinois*
569. Bellwood village, Illinois
570. Bensenville village, Illinois

571. Berwyn city, Illinois*
572. Berwyn township, Illinois*
573. Bloom township, Illinois*
574. Bloomingdale township, Illinois*
575. Bloomington City township, Illinois*
576. Bloomington city, Illinois*
577. Bolingbrook village, Illinois*
578. Bourbonnais township, Illinois*
579. Bremen township, Illinois*
580. Bridgeview village, Illinois
581. Bristol township, Illinois*
582. Buffalo Grove village, Illinois*
583. Burbank city, Illinois
584. Calumet City city, Illinois*
585. Capital township, Illinois*
586. Carbondale city, Illinois
587. Carol Stream village, Illinois*
588. Carpentersville village, Illinois*
589. Caseyville township, Illinois*
590. Champaign City township, Illinois*
591. Champaign city, Illinois*
592. Chicago Heights city, Illinois
593. Chicago Ridge village, Illinois
594. Cicero town / Cicero township, Illinois*
595. Clinton County, Illinois*
596. Collinsville township, Illinois*
597. Crystal Lake city, Illinois*
598. Cunningham township, Illinois*
599. Danville city, Illinois*
600. Decatur city, Illinois*
601. Decatur township, Illinois*
602. DeKalb city, Illinois*
603. DeKalb township, Illinois*
604. Des Plaines city, Illinois*
605. Dolton village, Illinois
606. Downers Grove township, Illinois*
607. Downers Grove village, Illinois*
608. Du Page township, Illinois*
609. Dundee township, Illinois*
610. Edwardsville township, Illinois*
611. Effingham County, Illinois*
612. Ela township, Illinois*
613. Elgin city, Illinois*
614. Elgin township, Illinois*
615. Elk Grove township, Illinois*
616. Elk Grove Village village, Illinois*
617. Elmhurst city, Illinois*
618. Evanston city, Illinois*
619. Evergreen Park village, Illinois
620. Forest Park village, Illinois
621. Frankfort township, Illinois*
622. Franklin Park village, Illinois
623. Fremont township, Illinois*
624. Fulton County, Illinois*
625. Galesburg City township, Illinois*
626. Galesburg city, Illinois*
627. Glendale Heights village, Illinois*
628. Glenview village, Illinois*
629. Grafton township, Illinois*
630. Granite City city, Illinois
631. Grundy County, Illinois*
632. Gurnee village, Illinois*
633. Hanover Park village, Illinois*
634. Hanover township, Illinois*
635. Harlem township, Illinois*
636. Harvey city, Illinois
637. Hoffman Estates village, Illinois*
638. Homer township, Illinois*
639. Jackson County, Illinois*
640. Jersey County, Illinois
641. Joliet city, Illinois*
642. Joliet township, Illinois*
643. Kankakee city, Illinois
644. Knox County, Illinois*
645. La Grange Park village, Illinois
646. Lake County, Illinois*
647. Lake Villa township, Illinois*
648. LaSalle County, Illinois*
649. Lee County, Illinois*
650. Leyden township, Illinois*
651. Libertyville township, Illinois*
652. Lisle township, Illinois*
653. Livingston County, Illinois*
654. Lockport township, Illinois*

655. Lombard village, Illinois*
656. Lyons township, Illinois*
657. Lyons village, Illinois
658. Madison County, Illinois*
659. Maine township, Illinois*
660. Massac County, Illinois
661. Maywood village, Illinois
662. McHenry township, Illinois*
663. McLean County, Illinois*
664. Melrose Park village, Illinois
665. Milton township, Illinois*
666. Moline city, Illinois*
667. Monroe County, Illinois*
668. Moraine township, Illinois*
669. Morgan County, Illinois*
670. Mount Prospect village, Illinois*
671. Mundelein village, Illinois*
672. Naperville city, Illinois*
673. Naperville township, Illinois*
674. New Lenox township, Illinois*
675. New Trier township, Illinois*
676. Niles township, Illinois*
677. Normal town, Illinois*
678. Normal township, Illinois*
679. Northbrook village, Illinois*
680. Northfield township, Illinois*
681. Northlake city, Illinois
682. Nunda township, Illinois*
683. Oak Lawn village, Illinois*
684. Oak Park township, Illinois*
685. Oak Park village, Illinois*
686. Ogle County, Illinois*
687. Orland Park village, Illinois*
688. Orland township, Illinois*
689. Oswego township, Illinois*
690. Oswego village, Illinois*
691. Palatine township, Illinois*
692. Palatine village, Illinois*
693. Palos Heights city, Illinois
694. Palos Hills city, Illinois
695. Palos township, Illinois*
696. Park Ridge city, Illinois*
697. Pekin city, Illinois*
698. Peoria City township, Illinois*
699. Peoria city, Illinois*
700. Peoria County, Illinois*
701. Plainfield township, Illinois*
702. Plainfield village, Illinois*
703. Proviso township, Illinois*
704. Quincy city, Illinois*
705. Quincy township, Illinois*
706. Randolph County, Illinois*
707. Rich township, Illinois*
708. River Forest village, Illinois
709. Rock Island city, Illinois*
710. Rockford township, Illinois*
711. Romeoville village, Illinois*
712. Schaumburg township, Illinois*
713. Schaumburg village, Illinois*
714. Schiller Park village, Illinois
715. Shields township, Illinois*
716. Skokie village, Illinois*
717. South Moline township, Illinois*
718. Springfield city, Illinois*
719. St. Charles city, Illinois*
720. St. Charles township, Illinois*
721. St. Clair County, Illinois*
722. St. Clair township, Illinois*
723. Stickney township, Illinois*
724. Streamwood village, Illinois*
725. Streator city, Illinois
726. Summit village, Illinois
727. Tazewell County, Illinois*
728. Thornton township, Illinois*
729. Tinley Park village, Illinois*
730. Troy township, Illinois*
731. Urbana city, Illinois*
732. Vermilion County, Illinois*
733. Vernon township, Illinois*
734. Warren township, Illinois*
735. Washington County, Illinois
736. Waukegan city, Illinois*
737. Waukegan township, Illinois*
738. Wayne township, Illinois*
739. West Deerfield township, Illinois*
740. Wheatland township, Illinois*

741. Wheaton city, Illinois*
742. Wheeling township, Illinois*
743. Wheeling village, Illinois*
744. Whiteside County, Illinois*
745. Williamson County, Illinois*
746. Winfield township, Illinois*
747. Wood River township, Illinois*
748. Woodford County, Illinois*
749. Woodridge village, Illinois*
750. Worth township, Illinois*
751. York township, Illinois*
752. Aboite township, Indiana*
753. Adams County, Indiana*
754. Adams township, Indiana*
755. Anderson city, Indiana*
756. Anderson township, Indiana*
757. Bartholomew County, Indiana*
758. Boone County, Indiana*
759. Calumet township, Indiana*
760. Carmel city, Indiana*
761. Cass County, Indiana*
762. Center township, Delaware County, Indiana*
763. Center township, Howard County, Indiana*
764. Center township, Lake County, Indiana*
765. Center township, Marion County, Indiana*
766. Center township, Porter County, Indiana*
767. Center township, Vanderburgh County, Indiana*
768. Clark County, Indiana*
769. Clay township, Hamilton County, Indiana*
770. Clay township, St. Joseph County, Indiana*
771. Clinton County, Indiana*
772. Columbus city, Indiana*
773. Columbus township, Indiana*
774. Concord township, Indiana*
775. Crown Point city, Indiana*
776. Daviess County, Indiana*
777. Dearborn County, Indiana*
778. Decatur township, Indiana*
779. DeKalb County, Indiana*
780. Delaware township, Indiana*
781. Dubois County, Indiana*
782. Elkhart city, Indiana*
783. Elkhart County, Indiana*
784. Elkhart township, Indiana*
785. Fairfield township, Indiana*
786. Fall Creek township, Hamilton County, Indiana*
787. Fayette County, Indiana
788. Floyd County, Indiana*
789. Franklin township, Marion County, Indiana*
790. Gibson County, Indiana*
791. Goshen city, Indiana*
792. Grant County, Indiana*
793. Greene County, Indiana*
794. Guilford township, Indiana*
795. Hamilton County, Indiana*
796. Hancock County, Indiana*
797. Harrison township, Vigo County, Indiana*
798. Hendricks County, Indiana*
799. Henry County, Indiana*
800. Hobart township, Indiana*
801. Huntington County, Indiana*
802. Jasper County, Indiana*
803. Jefferson County, Indiana*
804. Jeffersonville township, Indiana*
805. Johnson County, Indiana*
806. Knight township, Indiana*
807. Knox County, Indiana*
808. Kokomo city, Indiana*
809. Kosciusko County, Indiana*
810. LaGrange County, Indiana*
811. Lawrence township, Indiana*
812. Lincoln township, Indiana*
813. Madison city, Indiana
814. Madison County, Indiana*
815. Merrillville town, Indiana*

816. Miami County, Indiana*
817. Michigan City city, Indiana*
818. Mishawaka city, Indiana*
819. Montgomery County, Indiana*
820. New Albany city, Indiana*
821. New Albany township, Indiana*
822. Noble County, Indiana*
823. Noblesville township, Indiana*
824. North township, Indiana*
825. Ohio township, Indiana*
826. Orange County, Indiana
827. Penn township, Indiana*
828. Perry township, Allen County, Indiana*
829. Perry township, Marion County, Indiana*
830. Perry township, Monroe County, Indiana*
831. Pike township, Indiana*
832. Pleasant township, Johnson County, Indiana*
833. Portage city, Indiana*
834. Portage township, Indiana*
835. Portage township, Indiana*
836. Putnam County, Indiana*
837. Ross township, Indiana*
838. Shelby County, Indiana*
839. Shelbyville city, Indiana
840. St. John township, Indiana*
841. St. Joseph township, Indiana*
842. Steuben County, Indiana*
843. Valparaiso city, Indiana*
844. Wabash County, Indiana*
845. Wabash township, Indiana*
846. Warren township, Indiana*
847. Warrick County, Indiana*
848. Washington township, Allen County, Indiana*
849. Washington township, Hamilton County, Indiana*
850. Washington township, Hendricks County, Indiana*
851. Washington township, Marion County, Indiana*
852. Wayne County, Indiana*
853. Wayne township, Allen County, Indiana*
854. Wayne township, Marion County, Indiana*
855. Wayne township, Wayne County, Indiana*
856. Wea township, Indiana*
857. White River township, Indiana*
858. Whitley County, Indiana*
859. Ames city, Iowa*
860. Ankeny city, Iowa*
861. Bettendorf city, Iowa*
862. Cedar Falls city, Iowa*
863. Cedar Rapids city, Iowa*
864. Council Bluffs city, Iowa*
865. Davenport city, Iowa*
866. Des Moines city, Iowa*
867. Dubuque city, Iowa*
868. Dubuque County, Iowa*
869. Iowa City city, Iowa*
870. Linn County, Iowa*
871. Marion city, Iowa*
872. Marshall County, Iowa*
873. Sioux City city, Iowa*
874. Story County, Iowa*
875. Urbandale city, Iowa*
876. Wapello County, Iowa*
877. Warren County, Iowa*
878. Waterloo city, Iowa*
879. West Des Moines city, Iowa*
880. Woodbury County, Iowa*
881. Butler County, Kansas*
882. Cherokee County, Kansas
883. Crawford County, Kansas*
884. Douglas County, Kansas*
885. Ford County, Kansas*
886. Geary County, Kansas*
887. Harvey County, Kansas*
888. Hutchinson city, Kansas*
889. Lawrence city, Kansas*

890. Leavenworth city, Kansas*
891. Leawood city, Kansas*
892. Lenexa city, Kansas*
893. Lyon County, Kansas*
894. Manhattan city, Kansas*
895. Miami County, Kansas*
896. Montgomery County, Kansas*
897. Neosho County, Kansas
898. Olathe city, Kansas*
899. Riley County, Kansas*
900. Salina city, Kansas*
901. Saline County, Kansas*
902. Shawnee city, Kansas*
903. Shawnee County, Kansas*
904. Topeka city, Kansas*
905. Allen County, Kentucky
906. Anderson County, Kentucky
907. Barren County, Kentucky*
908. Bath County, Kentucky
909. Bell County, Kentucky
910. Bowling Green city, Kentucky*
911. Breathitt County, Kentucky
912. Bullitt County, Kentucky*
913. Caldwell County, Kentucky
914. Calloway County, Kentucky*
915. Campbell County, Kentucky*
916. Campbellsville city, Kentucky
917. Carter County, Kentucky
918. Casey County, Kentucky
919. Christian County, Kentucky*
920. Clay County, Kentucky
921. Clinton County, Kentucky
922. Daviess County, Kentucky*
923. Elizabethtown city, Kentucky*
924. Fleming County, Kentucky
925. Florence city, Kentucky*
926. Garrard County, Kentucky
927. Georgetown city, Kentucky*
928. Grant County, Kentucky
929. Graves County, Kentucky*
930. Harrison County, Kentucky
931. Hart County, Kentucky
932. Hopkinsville city, Kentucky*
933. Knox County, Kentucky*
934. Larue County, Kentucky
935. Laurel County, Kentucky*
936. Letcher County, Kentucky
937. Lewis County, Kentucky
938. Lincoln County, Kentucky
939. Logan County, Kentucky
940. Martin County, Kentucky
941. Mason County, Kentucky
942. Mercer County, Kentucky
943. Monroe County, Kentucky
944. Morgan County, Kentucky
945. Mount Washington city, Kentucky
946. Muhlenberg County, Kentucky*
947. Murray city, Kentucky
948. Nelson County, Kentucky*
949. Nicholasville city, Kentucky*
950. Owen County, Kentucky
951. Owensboro city, Kentucky*
952. Powell County, Kentucky
953. Richmond city, Kentucky*
954. Rowan County, Kentucky
955. Russell County, Kentucky
956. Shepherdsville city, Kentucky
957. Spencer County, Kentucky
958. Taylor County, Kentucky
959. Todd County, Kentucky
960. Union County, Kentucky
961. Wayne County, Kentucky
962. Webster County, Kentucky
963. Whitley County, Kentucky*
964. Winchester city, Kentucky
965. Acadia Parish, Louisiana*
966. Bienville Parish, Louisiana
967. Covington city, Louisiana
968. De Soto Parish, Louisiana
969. Gretna city, Louisiana
970. Iberville Parish, Louisiana*
971. Lafayette city, Louisiana*
972. Lincoln Parish, Louisiana*
973. Livingston Parish, Louisiana*
974. Morgan City city, Louisiana
975. Natchitoches city, Louisiana

976. Pointe Coupee Parish, Louisiana
977. Sabine Parish, Louisiana
978. St. Bernard Parish, Louisiana*
979. Tangipahoa Parish, Louisiana*
980. Terrebonne Parish, Louisiana*
981. Franklin County, Maine*
982. Hancock County, Maine*
983. Oxford County, Maine*
984. Annapolis city, Maryland*
985. Anne Arundel County, Maryland*
986. Baltimore County, Maryland*
987. Cecil County, Maryland*
988. College Park city, Maryland*
989. Gaithersburg city, Maryland*
990. Queen Anne's County, Maryland*
991. Rockville city, Maryland*
992. Salisbury city, Maryland*
993. Westminster city, Maryland
994. Worcester County, Maryland*
995. Amherst town, Massachusetts*
996. Andover town, Massachusetts*
997. Arlington town, Massachusetts*
998. Attleboro city, Massachusetts*
999. Barnstable County, Massachusetts*
1000. Boston city, Massachusetts*
1001. Bristol County, Massachusetts*
1002. Dartmouth town, Massachusetts*
1003. Dracut town, Massachusetts*
1004. Franklin Town city, Massachusetts*
1005. Lawrence city, Massachusetts*
1006. Lexington town, Massachusetts*
1007. Marlborough city, Massachusetts*
1008. Nantucket town, Massachusetts
1009. Needham town, Massachusetts*
1010. Newton city, Massachusetts*
1011. Norfolk County, Massachusetts*
1012. Plymouth County, Massachusetts*
1013. Shrewsbury town, Massachusetts*
1014. Taunton city, Massachusetts*
1015. Waltham city, Massachusetts*
1016. Westfield city, Massachusetts*
1017. Allegan County, Michigan*
1018. Ann Arbor city, Michigan*
1019. Barry County, Michigan*
1020. Battle Creek city, Michigan*
1021. Bay City city, Michigan*
1022. Bay County, Michigan*
1023. Bedford township, Michigan*
1024. Bloomfield charter township, Michigan*
1025. Brownstown charter township, Michigan*
1026. Cheboygan County, Michigan
1027. Chesterfield township, Michigan*
1028. Clare County, Michigan*
1029. Commerce charter township, Michigan*
1030. Dearborn city, Michigan*
1031. Dearborn Heights city, Michigan*
1032. Delta charter township, Michigan*
1033. Eastpointe city, Michigan*
1034. Emmet County, Michigan*
1035. Farmington Hills city, Michigan*
1036. Flint charter township, Michigan*
1037. Flint city, Michigan*
1038. Georgetown charter township, Michigan*
1039. Grand Blanc charter township, Michigan*
1040. Harrison charter township, Michigan
1041. Holland charter township, Michigan*
1042. Holland city, Michigan*
1043. Huron County, Michigan*
1044. Independence charter township, Michigan*
1045. Jackson County, Michigan*
1046. Kalamazoo city, Michigan*
1047. Kentwood city, Michigan*
1048. Lapeer County, Michigan*
1049. Lincoln Park city, Michigan*
1050. Macomb township, Michigan*
1051. Mecosta County, Michigan*
1052. Meridian charter township, Michigan*

1053. Midland city, Michigan*
1054. Midland County, Michigan*
1055. Muskegon city, Michigan*
1056. Novi city, Michigan*
1057. Orion charter township, Michigan*
1058. Ottawa County, Michigan*
1059. Plainfield charter township, Michigan*
1060. Portage city, Michigan*
1061. Redford charter township, Michigan*
1062. Rochester Hills city, Michigan*
1063. Roseville city, Michigan*
1064. Royal Oak city, Michigan*
1065. Saginaw charter township, Michigan*
1066. Saginaw city, Michigan*
1067. Shelby charter township, Michigan*
1068. Southfield city, Michigan*
1069. St. Clair Shores city, Michigan*
1070. St. Joseph County, Michigan*
1071. Sterling Heights city, Michigan*
1072. Taylor city, Michigan*
1073. Troy city, Michigan*
1074. Van Buren County, Michigan*
1075. Warren city, Michigan*
1076. Waterford charter township, Michigan*
1077. West Bloomfield charter township, Michigan*
1078. White Lake charter township, Michigan*
1079. Wyoming city, Michigan*
1080. Ypsilanti charter township, Michigan*
1081. Andover city, Minnesota*
1082. Apple Valley city, Minnesota*
1083. Becker County, Minnesota*
1084. Beltrami County, Minnesota*
1085. Benton County, Minnesota*
1086. Blaine city, Minnesota*
1087. Bloomington city, Minnesota*
1088. Blue Earth County, Minnesota*
1089. Brooklyn Center city, Minnesota*
1090. Brooklyn Park city, Minnesota*
1091. Burnsville city, Minnesota*
1092. Carlton County, Minnesota*
1093. Carver County, Minnesota*
1094. Chisago County, Minnesota*
1095. Clay County, Minnesota*
1096. Cottage Grove city, Minnesota*
1097. Crow Wing County, Minnesota*
1098. Dakota County, Minnesota*
1099. Douglas County, Minnesota*
1100. Eagan city, Minnesota*
1101. Eden Prairie city, Minnesota*
1102. Edina city, Minnesota*
1103. Freeborn County, Minnesota*
1104. Goodhue County, Minnesota*
1105. Hennepin County, Minnesota*
1106. Inver Grove Heights city, Minnesota*
1107. Isanti County, Minnesota*
1108. Itasca County, Minnesota*
1109. Kandiyohi County, Minnesota*
1110. Lakeville city, Minnesota*
1111. Mankato city, Minnesota*
1112. Maple Grove city, Minnesota*
1113. Maplewood city, Minnesota*
1114. McLeod County, Minnesota*
1115. Meeker County, Minnesota
1116. Minneapolis city, Minnesota*
1117. Minnetonka city, Minnesota*
1118. Moorhead city, Minnesota*
1119. Morrison County, Minnesota*
1120. Mower County, Minnesota*
1121. Nicollet County, Minnesota*
1122. Olmsted County, Minnesota*
1123. Otter Tail County, Minnesota*
1124. Plymouth city, Minnesota*
1125. Polk County, Minnesota*
1126. Ramsey County, Minnesota*
1127. Rice County, Minnesota*
1128. Richfield city, Minnesota*
1129. Roseau County, Minnesota
1130. Roseville city, Minnesota*

1131. Savage city, Minnesota*
1132. Scott County, Minnesota*
1133. Shakopee city, Minnesota*
1134. Sherburne County, Minnesota*
1135. Sibley County, Minnesota
1136. St. Cloud city, Minnesota*
1137. St. Louis County, Minnesota*
1138. St. Louis Park city, Minnesota*
1139. Stearns County, Minnesota*
1140. Steele County, Minnesota*
1141. Waseca County, Minnesota
1142. Washington County, Minnesota*
1143. Winona County, Minnesota*
1144. Woodbury city, Minnesota*
1145. Wright County, Minnesota*
1146. Alcorn County, Mississippi*
1147. Attala County, Mississippi
1148. Biloxi city, Mississippi*
1149. Brookhaven city, Mississippi
1150. Chickasaw County, Mississippi
1151. Clarke County, Mississippi
1152. Cleveland city, Mississippi
1153. Columbus city, Mississippi
1154. Copiah County, Mississippi
1155. Gautier city, Mississippi
1156. George County, Mississippi
1157. Greene County, Mississippi
1158. Hancock County, Mississippi*
1159. Holmes County, Mississippi
1160. Itawamba County, Mississippi
1161. Jackson County, Mississippi*
1162. Jefferson Davis County, Mississippi
1163. Jones County, Mississippi*
1164. Lafayette County, Mississippi*
1165. Lamar County, Mississippi*
1166. Lauderdale County, Mississippi*
1167. Lawrence County, Mississippi
1168. Lee County, Mississippi*
1169. Lincoln County, Mississippi*
1170. Lowndes County, Mississippi*
1171. Marion County, Mississippi
1172. Marshall County, Mississippi*
1173. Monroe County, Mississippi*
1174. Moss Point city, Mississippi
1175. Neshoba County, Mississippi
1176. Ocean Springs city, Mississippi
1177. Oktibbeha County, Mississippi*
1178. Olive Branch city, Mississippi*
1179. Panola County, Mississippi*
1180. Perry County, Mississippi
1181. Pike County, Mississippi*
1182. Pontotoc County, Mississippi*
1183. Rankin County, Mississippi*
1184. Southaven city, Mississippi*
1185. Starkville city, Mississippi
1186. Sunflower County, Mississippi
1187. Tallahatchie County, Mississippi
1188. Tishomingo County, Mississippi
1189. Tupelo city, Mississippi*
1190. Union County, Mississippi
1191. Vicksburg city, Mississippi
1192. Walthall County, Mississippi
1193. Warren County, Mississippi*
1194. Wayne County, Mississippi
1195. Yalobusha County, Mississippi
1196. Adair County, Missouri
1197. Andrew County, Missouri
1198. Ballwin city, Missouri*
1199. Barry County, Missouri*
1200. Blue Springs city, Missouri*
1201. Butler County, Missouri*
1202. Cape Girardeau city, Missouri*
1203. Cape Girardeau County, Missouri*
1204. Chesterfield city, Missouri*
1205. Christian County, Missouri*
1206. Clay County, Missouri*
1207. Clinton County, Missouri
1208. Columbia city, Missouri*
1209. Crawford County, Missouri
1210. DeKalb County, Missouri
1211. Dent County, Missouri
1212. Dunklin County, Missouri
1213. Florissant city, Missouri*
1214. Greene County, Missouri*
1215. Henry County, Missouri
1216. Independence city, Missouri*

1217. Iron County, Missouri
1218. Jasper County, Missouri*
1219. Jefferson City city, Missouri*
1220. Joplin city, Missouri*
1221. Laclede County, Missouri*
1222. Lafayette County, Missouri*
1223. Lawrence County, Missouri*
1224. Lee's Summit city, Missouri*
1225. Liberty city, Missouri*
1226. Livingston County, Missouri
1227. Madison County, Missouri
1228. McDonald County, Missouri
1229. New Madrid County, Missouri
1230. Newton County, Missouri*
1231. Nodaway County, Missouri
1232. O'Fallon city, Missouri*
1233. Perry County, Missouri
1234. Pike County, Missouri
1235. Platte County, Missouri*
1236. Polk County, Missouri*
1237. Ralls County, Missouri
1238. Ray County, Missouri
1239. Scott County, Missouri*
1240. St. Charles city, Missouri*
1241. St. Louis city, Missouri*
1242. St. Peters city, Missouri*
1243. Ste. Genevieve County, Missouri
1244. Stone County, Missouri*
1245. Taney County, Missouri*
1246. Texas County, Missouri
1247. University City city, Missouri*
1248. Vernon County, Missouri
1249. Washington County, Missouri
1250. Wentzville city, Missouri*
1251. Wildwood city, Missouri*
1252. Billings city, Montana*
1253. Bozeman city, Montana*
1254. Butte-Silver Bow, Montana*
1255. Flathead County, Montana*
1256. Helena city, Montana*
1257. Lewis and Clark County, Montana*
1258. Missoula County, Montana*
1259. Ravalli County, Montana*
1260. Yellowstone County, Montana*
1261. Adams County, Nebraska*
1262. Bellevue city, Nebraska*
1263. Buffalo County, Nebraska*
1264. Dodge County, Nebraska*
1265. Grand Island city, Nebraska*
1266. Hall County, Nebraska*
1267. Kearney city, Nebraska*
1268. Lancaster County, Nebraska*
1269. Lincoln city, Nebraska*
1270. Madison County, Nebraska*
1271. Omaha city, Nebraska*
1272. Platte County, Nebraska*
1273. Scotts Bluff County, Nebraska*
1274. South Sioux City city, Nebraska
1275. Douglas County, Nevada*
1276. Elko County, Nevada*
1277. Fernley city, Nevada
1278. Humboldt County, Nevada
1279. Lyon County, Nevada*
1280. Reno city, Nevada*
1281. Dover city, New Hampshire*
1282. Merrimack County, New Hampshire*
1283. Rochester city, New Hampshire*
1284. Atlantic City city, New Jersey*
1285. Belleville township, New Jersey*
1286. Berkeley township, New Jersey*
1287. Bloomfield township, New Jersey*
1288. Brick township, New Jersey*
1289. Bridgewater township, New Jersey*
1290. Camden city, New Jersey*
1291. Cape May County, New Jersey*
1292. Cherry Hill township, New Jersey*
1293. City of Orange township, New Jersey*
1294. Cumberland County, New Jersey*
1295. Deptford township, New Jersey*
1296. East Brunswick township, New Jersey*
1297. East Orange city, New Jersey*
1298. Edison township, New Jersey*
1299. Egg Harbor township, New Jersey*

1300. Evesham township, New Jersey*
1301. Ewing township, New Jersey*
1302. Fair Lawn borough, New Jersey*
1303. Fort Lee borough, New Jersey*
1304. Franklin township, Somerset County, New Jersey*
1305. Freehold township, New Jersey*
1306. Galloway township, New Jersey*
1307. Garfield city, New Jersey*
1308. Gloucester County, New Jersey*
1309. Gloucester township, New Jersey*
1310. Hackensack city, New Jersey*
1311. Hamilton township, Mercer County, New Jersey*
1312. Hillsborough township, New Jersey*
1313. Hoboken city, New Jersey*
1314. Howell township, New Jersey*
1315. Irvington township, New Jersey*
1316. Jackson township, New Jersey*
1317. Kearny town, New Jersey*
1318. Lakewood township, New Jersey*
1319. Lawrence township, New Jersey*
1320. Linden city, New Jersey*
1321. Livingston township, New Jersey*
1322. Long Branch city, New Jersey*
1323. Manalapan township, New Jersey*
1324. Manchester township, New Jersey*
1325. Marlboro township, New Jersey*
1326. Mercer County, New Jersey*
1327. Middlesex County, New Jersey*
1328. Middletown township, New Jersey*
1329. Monmouth County, New Jersey*
1330. Monroe township, Gloucester County, New Jersey*
1331. Monroe township, Middlesex County, New Jersey*
1332. Montclair township, New Jersey*
1333. Morris County, New Jersey*
1334. Mount Laurel township, New Jersey*
1335. New Brunswick city, New Jersey*
1336. Newark city, New Jersey*
1337. North Bergen township, New Jersey*
1338. North Brunswick township, New Jersey*
1339. Old Bridge township, New Jersey*
1340. Parsippany-Troy Hills township, New Jersey*
1341. Passaic city, New Jersey*
1342. Pennsauken township, New Jersey*
1343. Perth Amboy city, New Jersey*
1344. Piscataway township, New Jersey*
1345. Plainfield city, New Jersey*
1346. Princeton, New Jersey*
1347. Salem County, New Jersey*
1348. Sayreville borough, New Jersey*
1349. Somerset County, New Jersey*
1350. South Brunswick township, New Jersey*
1351. Teaneck township, New Jersey*
1352. Toms River township, New Jersey*
1353. Union City city, New Jersey*
1354. Union County, New Jersey*
1355. Union township, New Jersey*
1356. Warren County, New Jersey*
1357. Washington township, Gloucester County, New Jersey*
1358. Wayne township, New Jersey*
1359. West New York town, New Jersey*
1360. West Orange township, New Jersey*
1361. Willingboro township, New Jersey*
1362. Winslow township, New Jersey*
1363. Woodbridge township, New Jersey*
1364. Amherst town, New York*
1365. Bethlehem town, New York*
1366. Binghamton city, New York*
1367. Brighton town, New York*
1368. Carmel town, New York*
1369. Cattaraugus County, New York*
1370. Cayuga County, New York*
1371. Chautauqua County, New York*
1372. Cheektowaga town, New York*
1373. Chemung County, New York*

1374. Chenango County, New York*
1375. Cicero town, New York*
1376. Clarence town, New York*
1377. Clay town, New York*
1378. Clifton Park town, New York*
1379. Colonie town, New York*
1380. Cortlandt town, New York*
1381. Delaware County, New York*
1382. Eastchester town, New York*
1383. Essex County, New York*
1384. Freeport village, New York*
1385. Greece town, New York*
1386. Greenburgh town, New York*
1387. Guilderland town, New York*
1388. Hamburg town, New York*
1389. Henrietta town, New York*
1390. Irondequoit town, New York*
1391. Lancaster town, New York*
1392. Livingston County, New York*
1393. Madison County, New York*
1394. Manlius town, New York*
1395. Mount Pleasant town, New York*
1396. Mount Vernon city, New York*
1397. New Rochelle city, New York*
1398. Newburgh town, New York*
1399. Niagara Falls city, New York*
1400. North Tonawanda city, New York*
1401. Orleans County, New York*
1402. Ossining town, New York*
1403. Otsego County, New York*
1404. Penfield town, New York*
1405. Perinton town, New York*
1406. Putnam County, New York*
1407. Rye town, New York*
1408. Salina town, New York*
1409. Spring Valley village, New York*
1410. Tioga County, New York*
1411. Tonawanda town, New York*
1412. Union town, New York*
1413. Wappinger town, New York
1414. Warren County, New York*
1415. Warwick town, New York*
1416. Wayne County, New York*
1417. Webster town, New York*
1418. West Seneca town, New York*
1419. White Plains city, New York*
1420. Yates County, New York
1421. Yorktown town, New York*
1422. Alexander County, North Carolina*
1423. Alleghany County, North Carolina
1424. Apex town, North Carolina*
1425. Asheville city, North Carolina*
1426. Bertie County, North Carolina
1427. Burlington city, North Carolina*
1428. Cary town, North Carolina*
1429. Caswell County, North Carolina
1430. Chapel Hill town, North Carolina*
1431. Charlotte city, North Carolina*
1432. Cherokee County, North Carolina
1433. Chowan County, North Carolina
1434. Concord city, North Carolina*
1435. Cornelius town, North Carolina*
1436. Currituck County, North Carolina
1437. Durham city, North Carolina*
1438. Edgecombe County, North Carolina*
1439. Fuquay-Varina town, North Carolina*
1440. Garner town, North Carolina*
1441. Gastonia city, North Carolina*
1442. Goldsboro city, North Carolina*
1443. Greene County, North Carolina
1444. Greenville city, North Carolina*
1445. Harnett County, North Carolina*
1446. Henderson County, North Carolina*
1447. High Point city, North Carolina*
1448. Hoke County, North Carolina*
1449. Holly Springs town, North Carolina*
1450. Huntersville town, North Carolina*
1451. Indian Trail town, North Carolina*
1452. Jackson County, North Carolina*
1453. Johnston County, North Carolina*
1454. Kannapolis city, North Carolina*
1455. Lenoir County, North Carolina*
1456. Macon County, North Carolina*

1457. Matthews town, North Carolina*
1458. Monroe city, North Carolina*
1459. Mooresville town, North Carolina*
1460. Nash County, North Carolina*
1461. Pender County, North Carolina*
1462. Raleigh city, North Carolina*
1463. Rocky Mount city, North Carolina*
1464. Salisbury city, North Carolina*
1465. Sanford city, North Carolina*
1466. Stanly County, North Carolina*
1467. Transylvania County, North Carolina*
1468. Union County, North Carolina*
1469. Wake County, North Carolina*
1470. Wake Forest town, North Carolina*
1471. Warren County, North Carolina
1472. Washington County, North Carolina
1473. Wilson city, North Carolina*
1474. Wilson County, North Carolina*
1475. Cass County, North Dakota*
1476. Fargo city, North Dakota*
1477. Grand Forks city, North Dakota*
1478. Minot city, North Dakota*
1479. Morton County, North Dakota*
1480. West Fargo city, North Dakota*
1481. Adams County, Ohio
1482. Allen County, Ohio*
1483. Alliance city, Ohio
1484. Anderson township, Ohio*
1485. Athens township, Athens County, Ohio*
1486. Aurora city, Ohio
1487. Austintown township, Ohio*
1488. Bath township, Greene County, Ohio*
1489. Beavercreek city, Ohio*
1490. Beavercreek township, Ohio*
1491. Boardman township, Ohio*
1492. Bowling Green city, Ohio*
1493. Brunswick city, Ohio*
1494. Canton city, Ohio*
1495. Carroll County, Ohio
1496. Clark County, Ohio*
1497. Clear Creek township, Ohio*
1498. Cleveland Heights city, Ohio*
1499. Colerain township, Hamilton County, Ohio*
1500. Columbiana County, Ohio*
1501. Columbus city, Ohio*
1502. Concord township, Miami County, Ohio*
1503. Deerfield township, Ohio*
1504. Defiance County, Ohio*
1505. Delaware city, Ohio*
1506. Dublin city, Ohio*
1507. Fairborn city, Ohio*
1508. Fostoria city, Ohio
1509. Franklin township, Warren County, Ohio*
1510. Gahanna city, Ohio*
1511. Green township, Hamilton County, Ohio*
1512. Greene County, Ohio*
1513. Grove City city, Ohio*
1514. Hancock County, Ohio*
1515. Hardin County, Ohio*
1516. Harrison County, Ohio
1517. Highland County, Ohio*
1518. Hilliard city, Ohio*
1519. Holmes County, Ohio*
1520. Huber Heights city, Ohio*
1521. Jackson township, Franklin County, Ohio*
1522. Jackson township, Stark County, Ohio*
1523. Kent city, Ohio
1524. Kettering city, Ohio*
1525. Lancaster city, Ohio*
1526. Liberty township, Butler County, Ohio*
1527. Liberty township, Delaware County, Ohio*
1528. Lima city, Ohio*
1529. Madison County, Ohio*
1530. Mahoning County, Ohio*
1531. Mansfield city, Ohio*

1532. Marietta city, Ohio
1533. Marion city, Ohio*
1534. Marion township, Marion County, Ohio*
1535. Mason city, Ohio*
1536. Massillon city, Ohio*
1537. Medina County, Ohio*
1538. Mentor city, Ohio*
1539. Miami County, Ohio*
1540. Miami township, Clermont County, Ohio*
1541. Miami township, Logan County, Ohio*
1542. Mifflin township, Franklin County, Ohio*
1543. Monroe County, Ohio
1544. Morrow County, Ohio*
1545. Newark city, Ohio*
1546. Norwalk city, Ohio
1547. Norwich township, Franklin County, Ohio*
1548. Orange township, Delaware County, Ohio*
1549. Ottawa County, Ohio*
1550. Pickaway County, Ohio*
1551. Pike County, Ohio
1552. Plain township, Stark County, Ohio*
1553. Preble County, Ohio*
1554. Putnam County, Ohio*
1555. Ravenna city, Ohio
1556. Reynoldsburg city, Ohio*
1557. Sandusky city, Ohio
1558. Springfield city, Ohio*
1559. Springfield Township, Hamilton County, Ohio*
1560. Sylvania township, Ohio*
1561. Union County, Ohio*
1562. Union township, Clermont County, Ohio*
1563. Upper Arlington city, Ohio*
1564. Vinton County, Ohio
1565. Violet township, Ohio*
1566. Warren County, Ohio*
1567. Washington township, Franklin County, Ohio*
1568. Washington township, Montgomery County, Ohio*
1569. West Chester township, Ohio*
1570. Westerville city, Ohio*
1571. Westlake city, Ohio*
1572. Wood County, Ohio*
1573. Wyandot County, Ohio
1574. Youngstown city, Ohio*
1575. Ada city, Oklahoma
1576. Bartlesville city, Oklahoma*
1577. Bethany city, Oklahoma
1578. Broken Arrow city, Oklahoma*
1579. Bryan County, Oklahoma*
1580. Canadian County, Oklahoma*
1581. Carter County, Oklahoma*
1582. Cherokee County, Oklahoma*
1583. Edmond city, Oklahoma*
1584. Garfield County, Oklahoma*
1585. Guthrie city, Oklahoma
1586. Lawton city, Oklahoma*
1587. Moore city, Oklahoma*
1588. Muskogee city, Oklahoma*
1589. Muskogee County, Oklahoma*
1590. Mustang city, Oklahoma
1591. Norman city, Oklahoma*
1592. Owasso city, Oklahoma*
1593. Ponca City city, Oklahoma
1594. Pontotoc County, Oklahoma*
1595. Sequoyah County, Oklahoma*
1596. Wagoner County, Oklahoma*
1597. Albany city, Oregon*
1598. Beaverton city, Oregon*
1599. Bend city, Oregon*
1600. Benton County, Oregon*
1601. Clackamas County, Oregon*
1602. Clatsop County, Oregon*
1603. Columbia County, Oregon*
1604. Corvallis city, Oregon*
1605. Curry County, Oregon
1606. Deschutes County, Oregon*

1607. Douglas County, Oregon*
1608. Eugene city, Oregon*
1609. Grants Pass city, Oregon*
1610. Gresham city, Oregon*
1611. Hillsboro city, Oregon*
1612. Jackson County, Oregon*
1613. Josephine County, Oregon*
1614. Keizer city, Oregon*
1615. Klamath County, Oregon*
1616. Lake Oswego city, Oregon*
1617. Lane County, Oregon*
1618. Lincoln County, Oregon*
1619. Linn County, Oregon*
1620. Malheur County, Oregon*
1621. Marion County, Oregon*
1622. McMinnville city, Oregon*
1623. Medford city, Oregon*
1624. Multnomah County, Oregon*
1625. Oregon City city, Oregon*
1626. Polk County, Oregon*
1627. Redmond city, Oregon*
1628. Salem city, Oregon*
1629. Springfield city, Oregon*
1630. Tigard city, Oregon*
1631. Umatilla County, Oregon*
1632. Washington County, Oregon*
1633. Yamhill County, Oregon*
1634. Abington township, Pennsylvania*
1635. Allentown city, Pennsylvania*
1636. Altoona city, Pennsylvania*
1637. Beaver County, Pennsylvania*
1638. Berks County, Pennsylvania*
1639. Bethel Park municipality, Pennsylvania*
1640. Bethlehem city, Pennsylvania*
1641. Blair County, Pennsylvania*
1642. Butler County, Pennsylvania*
1643. Centre County, Pennsylvania*
1644. Cheltenham township, Pennsylvania*
1645. Chester city, Pennsylvania*
1646. Cranberry township, Pennsylvania*
1647. Crawford County, Pennsylvania*
1648. Cumberland County, Pennsylvania*
1649. Erie city, Pennsylvania*
1650. Falls township, Pennsylvania*
1651. Hampden township, Pennsylvania*
1652. Harrisburg city, Pennsylvania*
1653. Haverford township, Pennsylvania*
1654. Hempfield township, Pennsylvania*
1655. Huntingdon County, Pennsylvania*
1656. Jefferson County, Pennsylvania*
1657. Lancaster city, Pennsylvania*
1658. Lancaster County, Pennsylvania*
1659. Lebanon County, Pennsylvania*
1660. Lower Macungie township, Pennsylvania*
1661. Lower Merion township, Pennsylvania*
1662. Lower Paxton township, Pennsylvania*
1663. Lower Southampton township, Pennsylvania
1664. Manheim township, Pennsylvania*
1665. McKean County, Pennsylvania*
1666. Mifflin County, Pennsylvania*
1667. Millcreek township, Pennsylvania*
1668. Monroe County, Pennsylvania*
1669. Montgomery County, Pennsylvania*
1670. Mount Lebanon township, Pennsylvania*
1671. New Castle city, Pennsylvania
1672. North Huntingdon township, Pennsylvania*
1673. Northampton township, Pennsylvania*
1674. Penn Hills township, Pennsylvania*
1675. Perry County, Pennsylvania*
1676. Radnor township, Pennsylvania*
1677. Reading city, Pennsylvania*
1678. Ridley township, Pennsylvania*
1679. Ross township, Pennsylvania*
1680. Scranton city, Pennsylvania*
1681. Snyder County, Pennsylvania*
1682. Somerset County, Pennsylvania*

1683. State College borough, Pennsylvania*
1684. Susquehanna County, Pennsylvania*
1685. Union County, Pennsylvania*
1686. Upper Darby township, Pennsylvania*
1687. Upper Merion township, Pennsylvania*
1688. Venango County, Pennsylvania*
1689. Warren County, Pennsylvania*
1690. Wayne County, Pennsylvania*
1691. York city, Pennsylvania*
1692. York County, Pennsylvania*
1693. Adjuntas Municipio, Puerto Rico
1694. Arroyo Municipio, Puerto Rico
1695. Barceloneta Municipio, Puerto Rico
1696. Bayamón Municipio, Puerto Rico*
1697. Caguas Municipio, Puerto Rico*
1698. Carolina Municipio, Puerto Rico*
1699. Cataño Municipio, Puerto Rico
1700. Cayey Municipio, Puerto Rico*
1701. Ceiba Municipio, Puerto Rico
1702. Cidra Municipio, Puerto Rico*
1703. Coamo Municipio, Puerto Rico*
1704. Corozal Municipio, Puerto Rico*
1705. Guayama Municipio, Puerto Rico*
1706. Guaynabo Municipio, Puerto Rico*
1707. Gurabo Municipio, Puerto Rico*
1708. Humacao Municipio, Puerto Rico*
1709. Las Piedras Municipio, Puerto Rico*
1710. Mayagüez Municipio, Puerto Rico*
1711. San Sebastián Municipio, Puerto Rico*
1712. Toa Baja Municipio, Puerto Rico*
1713. Villalba Municipio, Puerto Rico
1714. Yauco Municipio, Puerto Rico*
1715. Providence city, Rhode Island*
1716. Aiken city, South Carolina*
1717. Columbia city, South Carolina*
1718. Darlington County, South Carolina*
1719. Florence city, South Carolina*
1720. Goose Creek city, South Carolina*
1721. Greenville city, South Carolina*
1722. Greer city, South Carolina*
1723. Hilton Head Island town, South Carolina*
1724. Rock Hill city, South Carolina*
1725. Spartanburg city, South Carolina*
1726. Sumter city, South Carolina*
1727. Brookings County, South Dakota*
1728. Brown County, South Dakota*
1729. Lincoln County, South Dakota*
1730. Minnehaha County, South Dakota*
1731. Pennington County, South Dakota*
1732. Rapid City city, South Dakota*
1733. Sioux Falls city, South Dakota*
1734. Bartlett city, Tennessee*
1735. Bedford County, Tennessee*
1736. Brentwood city, Tennessee*
1737. Cannon County, Tennessee
1738. Carter County, Tennessee*
1739. Chattanooga city, Tennessee*
1740. Cheatham County, Tennessee*
1741. Clarksville city, Tennessee*
1742. Cleveland city, Tennessee*
1743. Coffee County, Tennessee*
1744. Collierville town, Tennessee*
1745. Columbia city, Tennessee*
1746. Cookeville city, Tennessee*
1747. Crockett County, Tennessee
1748. Crossville city, Tennessee
1749. Cumberland County, Tennessee*
1750. Decatur County, Tennessee
1751. DeKalb County, Tennessee
1752. Dickson County, Tennessee*
1753. Dyer County, Tennessee*
1754. Fayette County, Tennessee*
1755. Fentress County, Tennessee
1756. Franklin city, Tennessee*
1757. Gallatin city, Tennessee*
1758. Germantown city, Tennessee*
1759. Gibson County, Tennessee*
1760. Giles County, Tennessee
1761. Hamblen County, Tennessee*

1762. Haywood County, Tennessee
1763. Henderson County, Tennessee
1764. Hendersonville city, Tennessee*
1765. Henry County, Tennessee*
1766. Jackson city, Tennessee*
1767. Johnson City city, Tennessee*
1768. Johnson County, Tennessee
1769. Kingsport city, Tennessee*
1770. La Vergne city, Tennessee*
1771. Lauderdale County, Tennessee
1772. Lawrence County, Tennessee*
1773. Lawrenceburg city, Tennessee
1774. Lebanon city, Tennessee*
1775. Lewisburg city, Tennessee
1776. Lincoln County, Tennessee*
1777. Marshall County, Tennessee*
1778. Maryville city, Tennessee
1779. Maury County, Tennessee*
1780. McMinnville city, Tennessee
1781. Montgomery County, Tennessee*
1782. Morgan County, Tennessee
1783. Morristown city, Tennessee*
1784. Mount Juliet city, Tennessee*
1785. Murfreesboro city, Tennessee*
1786. Nashville-Davidson metropolitan government, Tennessee*
1787. Obion County, Tennessee*
1788. Overton County, Tennessee
1789. Putnam County, Tennessee*
1790. Robertson County, Tennessee*
1791. Scott County, Tennessee
1792. Shelbyville city, Tennessee
1793. Smith County, Tennessee
1794. Smyrna town, Tennessee*
1795. Spring Hill city, Tennessee*
1796. Sullivan County, Tennessee*
1797. Sumner County, Tennessee*
1798. Tipton County, Tennessee*
1799. Warren County, Tennessee*
1800. Wayne County, Tennessee
1801. Weakley County, Tennessee*
1802. White County, Tennessee
1803. Wilson County, Tennessee*
1804. Abilene city, Texas*
1805. Allen city, Texas*
1806. Amarillo city, Texas*
1807. Anderson County, Texas*
1808. Arlington city, Texas*
1809. Atascosa County, Texas*
1810. Austin city, Texas*
1811. Austin County, Texas*
1812. Bastrop County, Texas*
1813. Baytown city, Texas*
1814. Beaumont city, Texas*
1815. Bedford city, Texas*
1816. Bee County, Texas*
1817. Bell County, Texas*
1818. Blanco County, Texas
1819. Brazoria County, Texas*
1820. Brown County, Texas*
1821. Brownsville city, Texas*
1822. Bryan city, Texas*
1823. Burleson city, Texas*
1824. Burleson County, Texas
1825. Burnet County, Texas*
1826. Caldwell County, Texas*
1827. Calhoun County, Texas
1828. Cameron County, Texas*
1829. Carrollton city, Texas*
1830. Cass County, Texas*
1831. Cedar Hill city, Texas*
1832. Cedar Park city, Texas*
1833. Chambers County, Texas*
1834. Cibolo city, Texas*
1835. Cleburne city, Texas*
1836. College Station city, Texas*
1837. Collin County, Texas*
1838. Colorado County, Texas
1839. Comal County, Texas*
1840. Conroe city, Texas*
1841. Cooke County, Texas*
1842. Coppell city, Texas*
1843. Copperas Cove city, Texas*
1844. Corpus Christi city, Texas*
1845. Dallas city, Texas*
1846. Deer Park city, Texas*

1847. Del Rio city, Texas*
1848. Denton city, Texas*
1849. Denton County, Texas*
1850. DeSoto city, Texas*
1851. Dimmit County, Texas
1852. Duncanville city, Texas*
1853. Ector County, Texas*
1854. Edinburg city, Texas*
1855. El Paso city, Texas*
1856. El Paso County, Texas*
1857. Erath County, Texas*
1858. Euless city, Texas*
1859. Falls County, Texas
1860. Fannin County, Texas*
1861. Farmers Branch city, Texas*
1862. Flower Mound town, Texas*
1863. Fort Bend County, Texas*
1864. Fort Worth city, Texas*
1865. Franklin County, Texas
1866. Friendswood city, Texas*
1867. Frisco city, Texas*
1868. Galveston city, Texas*
1869. Galveston County, Texas*
1870. Garland city, Texas*
1871. Georgetown city, Texas*
1872. Grand Prairie city, Texas*
1873. Grapevine city, Texas*
1874. Grayson County, Texas*
1875. Gregg County, Texas*
1876. Guadalupe County, Texas*
1877. Hale County, Texas*
1878. Haltom City city, Texas*
1879. Hardin County, Texas*
1880. Harker Heights city, Texas*
1881. Harlingen city, Texas*
1882. Harris County, Texas*
1883. Harrison County, Texas*
1884. Hays County, Texas*
1885. Hidalgo County, Texas*
1886. Hill County, Texas*
1887. Hood County, Texas*
1888. Hopkins County, Texas*
1889. Houston city, Texas*
1890. Houston County, Texas
1891. Howard County, Texas*
1892. Hunt County, Texas*
1893. Huntsville city, Texas*
1894. Hurst city, Texas*
1895. Irving city, Texas*
1896. Jasper County, Texas*
1897. Jefferson County, Texas*
1898. Jones County, Texas
1899. Keller city, Texas*
1900. Kendall County, Texas*
1901. Kerr County, Texas*
1902. Killeen city, Texas*
1903. Kyle city, Texas*
1904. La Porte city, Texas*
1905. Lancaster city, Texas*
1906. League City city, Texas*
1907. Leander city, Texas*
1908. Leon County, Texas
1909. Leon Valley city, Texas
1910. Lewisville city, Texas*
1911. Liberty County, Texas*
1912. Limestone County, Texas
1913. Little Elm city, Texas*
1914. Longview city, Texas*
1915. Lubbock city, Texas*
1916. Lubbock County, Texas*
1917. Lufkin city, Texas*
1918. Madison County, Texas
1919. Mansfield city, Texas*
1920. Matagorda County, Texas*
1921. McAllen city, Texas*
1922. McKinney city, Texas*
1923. Medina County, Texas*
1924. Mesquite city, Texas*
1925. Midland city, Texas*
1926. Midland County, Texas*
1927. Midlothian city, Texas*
1928. Milam County, Texas
1929. Mission city, Texas*
1930. Missouri City city, Texas*
1931. Morris County, Texas
1932. Nacogdoches city, Texas*

1933. Nacogdoches County, Texas*
1934. Navarro County, Texas*
1935. New Braunfels city, Texas*
1936. Newton County, Texas
1937. Nolan County, Texas
1938. North Richland Hills city, Texas*
1939. Nueces County, Texas*
1940. Odessa city, Texas*
1941. Orange County, Texas*
1942. Panola County, Texas
1943. Parker County, Texas*
1944. Pasadena city, Texas*
1945. Pearland city, Texas*
1946. Pflugerville city, Texas*
1947. Pharr city, Texas*
1948. Plano city, Texas*
1949. Port Arthur city, Texas*
1950. Potter County, Texas*
1951. Randall County, Texas*
1952. Red River County, Texas
1953. Richardson city, Texas*
1954. Robertson County, Texas
1955. Rockwall city, Texas*
1956. Rosenberg city, Texas*
1957. Round Rock city, Texas*
1958. Rowlett city, Texas*
1959. San Angelo city, Texas*
1960. San Juan city, Texas*
1961. San Marcos city, Texas*
1962. San Patricio County, Texas*
1963. Schertz city, Texas*
1964. Shelby County, Texas
1965. Sherman city, Texas*
1966. Socorro city, Texas*
1967. Southlake city, Texas*
1968. Starr County, Texas*
1969. Sugar Land city, Texas*
1970. Taylor County, Texas*
1971. Temple city, Texas*
1972. Texarkana city, Texas*
1973. Texas City city, Texas*
1974. The Colony city, Texas*
1975. Tom Green County, Texas*
1976. Travis County, Texas*
1977. Trinity County, Texas
1978. Tyler city, Texas*
1979. Upshur County, Texas*
1980. Uvalde County, Texas
1981. Val Verde County, Texas*
1982. Van Zandt County, Texas*
1983. Victoria city, Texas*
1984. Victoria County, Texas*
1985. Waco city, Texas*
1986. Waller County, Texas*
1987. Washington County, Texas*
1988. Waxahachie city, Texas*
1989. Weatherford city, Texas*
1990. Weslaco city, Texas*
1991. Wharton County, Texas*
1992. Wichita Falls city, Texas*
1993. Wilson County, Texas*
1994. Wise County, Texas*
1995. Wood County, Texas*
1996. Wylie city, Texas*
1997. American Fork city, Utah*
1998. Bountiful city, Utah*
1999. Box Elder County, Utah*
2000. Carbon County, Utah
2001. Cedar City city, Utah*
2002. Clearfield city, Utah*
2003. Cottonwood Heights city, Utah*
2004. Davis County, Utah*
2005. Draper city, Utah*
2006. Duchesne County, Utah
2007. Eagle Mountain city, Utah*
2008. Emery County, Utah
2009. Herriman city, Utah*
2010. Holladay city, Utah*
2011. Iron County, Utah*
2012. Juab County, Utah
2013. Kaysville city, Utah*
2014. Kearns metro township, Utah*
2015. Layton city, Utah*
2016. Lehi city, Utah*
2017. Logan city, Utah*
2018. Midvale city, Utah*

2019. Millard County, Utah
2020. Millcreek city, Utah*
2021. Murray city, Utah*
2022. Ogden city, Utah*
2023. Orem city, Utah*
2024. Pleasant Grove city, Utah*
2025. Provo city, Utah*
2026. Riverton city, Utah*
2027. Roy city, Utah*
2028. Salt Lake City city, Utah*
2029. Salt Lake County, Utah*
2030. San Juan County, Utah
2031. Sandy city, Utah*
2032. Sanpete County, Utah*
2033. Saratoga Springs city, Utah*
2034. South Jordan city, Utah*
2035. Spanish Fork city, Utah*
2036. Springville city, Utah*
2037. St. George city, Utah*
2038. Syracuse city, Utah*
2039. Taylorsville city, Utah*
2040. Tooele city, Utah*
2041. West Jordan city, Utah*
2042. West Valley City city, Utah*
2043. Addison County, Vermont*
2044. Bennington County, Vermont*
2045. Brattleboro town, Vermont
2046. Burlington city, Vermont*
2047. Chittenden County, Vermont*
2048. Franklin County, Vermont*
2049. Rutland County, Vermont*
2050. Washington County, Vermont*
2051. Windham County, Vermont*
2052. Windsor County, Vermont*
2053. Albemarle County, Virginia*
2054. Augusta County, Virginia*
2055. Bedford County, Virginia*
2056. Blacksburg town, Virginia*
2057. Campbell County, Virginia*
2058. Caroline County, Virginia*
2059. Charlottesville city, Virginia*
2060. Gloucester County, Virginia*
2061. Grayson County, Virginia
2062. Hampton city, Virginia*
2063. Hanover County, Virginia*
2064. Harrisonburg city, Virginia*
2065. James City County, Virginia*
2066. Leesburg town, Virginia*
2067. Lynchburg city, Virginia*
2068. Manassas city, Virginia*
2069. Newport News city, Virginia*
2070. Orange County, Virginia*
2071. Petersburg city, Virginia*
2072. Rockingham County, Virginia*
2073. Russell County, Virginia
2074. Spotsylvania County, Virginia*
2075. Suffolk city, Virginia*
2076. York County, Virginia*
2077. Anacortes city, Washington
2078. Auburn city, Washington*
2079. Bellevue city, Washington*
2080. Bellingham city, Washington*
2081. Benton County, Washington*
2082. Bothell city, Washington*
2083. Bremerton city, Washington*
2084. Burien city, Washington*
2085. Clallam County, Washington*
2086. Clark County, Washington*
2087. Cowlitz County, Washington*
2088. Des Moines city, Washington*
2089. Douglas County, Washington*
2090. Edmonds city, Washington*
2091. Everett city, Washington*
2092. Federal Way city, Washington*
2093. Grant County, Washington*
2094. Grays Harbor County, Washington*
2095. Issaquah city, Washington*
2096. Kennewick city, Washington*
2097. Kent city, Washington*
2098. Kirkland city, Washington*
2099. Kittitas County, Washington*
2100. Lacey city, Washington*
2101. Lake Stevens city, Washington*
2102. Lakewood city, Washington*
2103. Lincoln County, Washington
2104. Longview city, Washington*

2105. Lynnwood city, Washington*
2106. Marysville city, Washington*
2107. Mason County, Washington*
2108. Mount Vernon city, Washington*
2109. Okanogan County, Washington*
2110. Olympia city, Washington*
2111. Pasco city, Washington*
2112. Pullman city, Washington*
2113. Puyallup city, Washington*
2114. Redmond city, Washington*
2115. Renton city, Washington*
2116. Richland city, Washington*
2117. Sammamish city, Washington*
2118. San Juan County, Washington
2119. Seattle city, Washington*
2120. Sedro-Woolley city, Washington
2121. Shoreline city, Washington*
2122. Skagit County, Washington*
2123. Snohomish County, Washington*
2124. Spokane Valley city, Washington*
2125. Stevens County, Washington*
2126. University Place city, Washington*
2127. Vancouver city, Washington*
2128. Walla Walla city, Washington*
2129. Wenatchee city, Washington*
2130. Whitman County, Washington*
2131. Yakima city, Washington*
2132. Yakima County, Washington*
2133. Appleton city, Wisconsin*
2134. Beloit city, Wisconsin*
2135. Brookfield city, Wisconsin*
2136. Eau Claire city, Wisconsin*
2137. Fitchburg city, Wisconsin*
2138. Fond du Lac city, Wisconsin*
2139. Green Bay city, Wisconsin*
2140. Janesville city, Wisconsin*
2141. La Crosse city, Wisconsin*
2142. Madison city, Wisconsin*
2143. Manitowoc city, Wisconsin*
2144. Menomonee Falls village, Wisconsin*
2145. Mount Pleasant village, Wisconsin
2146. New Berlin city, Wisconsin*
2147. Oshkosh city, Wisconsin*
2148. Polk County, Wisconsin*
2149. Racine city, Wisconsin*
2150. Sheboygan city, Wisconsin*
2151. Sun Prairie city, Wisconsin*
2152. Wausau city, Wisconsin*
2153. Wauwatosa city, Wisconsin*
2154. West Bend city, Wisconsin*
2155. Albany County, Wyoming*
2156. Campbell County, Wyoming*
2157. Carbon County, Wyoming
2158. Casper city, Wyoming*
2159. Cheyenne city, Wyoming*
2160. Fremont County, Wyoming*
2161. Gillette city, Wyoming*
2162. Green River city, Wyoming
2163. Laramie city, Wyoming*
2164. Laramie County, Wyoming*
2165. Natrona County, Wyoming*
2166. Riverton city, Wyoming
2167. Rock Springs city, Wyoming
2168. Sheridan County, Wyoming*
2169. Sweetwater County, Wyoming*

EXHIBIT X

Governor's Release of Opioid-Related Claims Pursuant to the CVS Settlement Agreement

I, [NAME], Governor of the [Commonwealth]/[State]/[Territory] of [Commonwealth]/[State]/[Territory], hereby authorize Attorney General [NAME] to settle and release, to the maximum extent of my power as Governor, all Released Claims of (1) all of [Commonwealth]/[State]/[Territory]'s past and present executive departments, agencies, divisions, boards, commissions and instrumentalities with regulatory authority to enforce state and federal controlled substances acts and (2) all of [Commonwealth]/[State]/[Territory]'s past and present executive departments, agencies, divisions, boards, commissions and instrumentalities that have the authority to bring Claims related to Alleged Harms and/or Covered Conduct seeking money (including abatement and/or remediation) or revocation of a pharmaceutical distribution or dispensing license. The foregoing authorization is given in connection with Section XI.G of the CVS Settlement Agreement dated as of December [●], 2022 setting forth the terms of settlement between and among CVS, on the one hand, and the Settling States and Participating Subdivisions, on the other hand. This release is intended to be a "release from a State's Governor" as contemplated in such section. Capitalized terms used herein and defined in the Settlement Agreement have the meanings given to them in such settlement agreement.

_____

[Name]
Governor of the [Commonwealth]/[State]/[Territory] of [Commonwealth]/[State]/[Territory]

Date: _____

ONE NEVADA AGREEMENT ON ALLOCATION OF OPIOID RECOVERIES

WHEREAS, the people of the State of Nevada and its communities have been harmed by the misfeasance, nonfeasance, and malfeasance of certain individuals and entities, including licit and illicit opioid distribution, that has created an opioid epidemic both nationally and within the State of Nevada;

WHEREAS, on January 24, 2019, the Honorable Steve Sisolak, Governor of the State of Nevada, in consultation with the Honorable Aaron D. Ford, Attorney General of the State of Nevada, entered a Declaration of Findings Pursuant to NRS 228.1111(1)(a), declaring that the State of Nevada is combating the opioid epidemic;

WHEREAS, the State of Nevada though its elected representatives and counsel, including the Honorable Aaron D. Ford, Attorney General of the State of Nevada, and certain Local Governments, through their elected representatives and counsel, are separately engaged in opioid-related litigation seeking to hold various entities and individuals accountable for the opioid epidemic in the State of Nevada based on their misconduct relating to the unlawful manufacture, marketing, promotion, distribution, and/or dispensing of prescription opioids;

WHEREAS, the State of Nevada and its Local Governments share a common desire to remediate and alleviate the impacts of the opioid epidemic throughout the State of Nevada;

THEREFORE, the State of Nevada and its Local Governments, desire, subject to formal approval effectuating this One Nevada Agreement on Allocation of Opioid Recoveries ("Agreement") relating to the resolution or partial resolution of opioid-related litigation and the allocation and use of the proceeds of any Recoveries as described; and

NOW THEREFORE, the Parties agree and desire to be bound as follows:

A. Definitions

As used in this Agreement:

1. The "State" or "State of Nevada" shall mean the State of Nevada acting through its Attorney General.
2. “Local Governments” shall mean the Local Governments listed in **Exhibit A**, attached.
3. "Litigating Counties" shall mean the following Nevada Counties: Carson City, Churchill, Clark, Douglas, Esmeralda, Humboldt, Lincoln, Lyon, Mineral, Nye, Washoe, and White Pine;
4. "Non-Litigating Counties" shall mean the following Nevada Counties: Elko, Eureka, Lander, Pershing, and Storey;
5. “Litigating Cities and Districts” shall mean the Cities and Districts listed in **Exhibit B**, attached;
6. “Counsel” shall mean the contingency fee retained attorneys to the State of Nevada and each of the Litigating Counties and Litigating Cities and Districts for their respective opioid-related litigation.
7. "The Parties" shall mean the State of Nevada and the Local Governments.
8. "Defendant" or "Defendants" shall mean one or more entities and/or individuals responsible for the opioid epidemic in the State of Nevada based upon various theories and causes of action asserted in pending opioid-related litigation by the State of Nevada, the Litigating Counties, and the Litigating Cities and Districts as listed in **Exhibit C**, attached.
9. "Lead Litigator Costs" shall mean the costs incurred to date for opioid-related litigation by the State of Nevada, the Litigating Counties, and the Litigating Cities

and Districts against the Defendants of at the time of any Recovery. Costs do not include attorney fees or contingency fees for Counsel.

10. "Federal Government CMS Medicaid Costs" shall mean 22.52% of any Recovery after deduction of the Lead Litigator Costs that may be asserted, and only if determined to be recoverable, against the State of Nevada's Federal Government Centers for Medicaid Services costs for claims, otherwise commonly known as the federal share of Medicaid claims payments.

11. "Negotiating Committee" shall mean Counsel for the State of Nevada, the Nevada Attorney General or his designees as required by NRS chapter 228.1113, et seq., and Counsel for the Litigating Counties, and the Litigating Cities and Districts (collectively, "Members") in their respective opioid-related litigation.

12. "Recovery" or "Recoveries" shall mean monetary amounts obtained through the negotiated resolution of legal or equitable claims against any Defendant in any opioid-related litigation listed in **Exhibit C**, and shall include any Recoveries against any Defendant through bankruptcy proceedings related to the opioid-related litigation in **Exhibit C** to the extent the bankruptcy court allows for use of this Agreement to allocate Recoveries.

13. "Approved Purposes" shall mean only uses to remediate the harms, impact, and risks caused by the opioid epidemic to the State of Nevada and its residents, and are consistent with those uses required by Senate Bill 390 (SB 390) as enrolled by the 81st (2021) Nevada Legislative Session and signed into law by the Nevada Governor, or uses that are listed as an approved use for abatement purposes in any plan approved by a bankruptcy court that are not otherwise inconsistent with SB 390.

B. Allocation of Recoveries

1. With the exception of up to 8% for administrative costs, or unless otherwise limited by Court Order, all Recoveries must be used for Approved Purposes.

2. Any Recovery, after deduction of Lead Litigator Costs, unless otherwise limited by Court Order, and the Federal Government CMS Medicaid Costs, if and only if applicable, shall be divided into percentages and allocated within these percentages as follows:

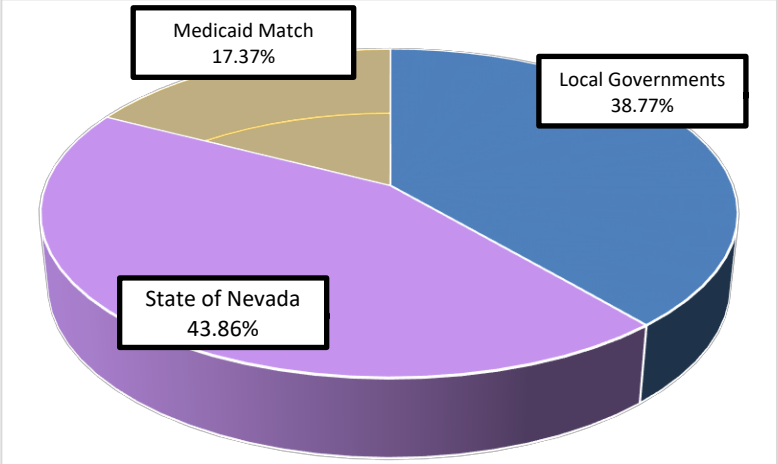

(*pie chart for illustrative purposes*)

1) "State of Nevada Allocation": 43.86% to the State of Nevada;

2) "Local Governments Allocation": 38.77% to the Local Governments to be allocated by percentage of claims data for the Local Governments as outlined in **Exhibit D**, attached; and

3) "Medicaid Match Allocation": 17.37% representing what is referred to as the Medicaid Match which amount shall be allocated among the Counties as follows: **a)** 65% to Clark County, **b)** 14% to Washoe County, and **c)** 21% to the remaining Litigating and Non-Litigating Counties by population, as outlined in **Exhibit E**, attached.

3. Unless otherwise directed by court order, the State of Nevada shall receive and divide and allocate any Recoveries described in Paragraph 2.

4. The State of Nevada and Local Governments shall exercise due diligence to complete a release against any Defendant, if necessary, as a result of a Recovery pursuant to this Agreement.

5. The State of Nevada and Local Governments shall make every reasonable effort to coordinate any related press releases and/or press interaction concerning any settlement or other disposition under this Agreement.

6. The State of Nevada and Local Governments are, after deduction of Lead Litigator Costs unless otherwise limited by Court Order, and the Federal Government CMS Medicaid Costs, if and only if applicable, from any Recovery, each responsible for any remaining costs of that Party's litigation from that Party's share of the Recovery after allocation.

7. The State of Nevada and Local Governments are each responsible, unless otherwise directed by court order, for payment of any attorney fees for the use of their Counsel in maintaining their respective opioid-related litigation from their share of the Recoveries after allocation pursuant to the terms of their respective contingency fee agreements. However, in the event Counsel is eligible to apply for attorney fees or costs from a national fund created by one or more Defendants in connection with a Recovery, Counsel will refund any amount recovered from said national fund proportionate to the amount of attorney fees paid under each respective contingency fee agreement.

8. Additionally, a fee adjustment of 25% shall be deducted from the share of each of the allocation amounts to the Non-Litigating Counties described in Paragraph 2 of

this Agreement. The total amount of the fee adjustment deducted pursuant to this paragraph shall then be allocated to the Litigating Counties by total percentage of claims data for those Litigating Counties as outlined in **Exhibit F**, attached.

9. In the event a Local Government merges, dissolves, ceases to exist, opioid-related litigation is dismissed with prejudice including the exhaustion of any and all appeals related to the Court's order of dismissal, or is excluded from a specific recovery for any reason, the allocation percentage for that Local Government shall be reallocated as follows:

   a. If a Local Government excluded under this paragraph is a Litigating City or District, then that Litigating City or District's allocated share shall be added to the share of the County in which the Litigating City or District is located in addition to the County's allocated share.

   b. If a Local Government excluded under this paragraph is a County, then that County's allocated share shall be added to the State's share minus the allocated shares of any Litigating City or District located within the excluded County that would otherwise be entitled to receive their shares.

10. Funds received by the State of Nevada or Local Governments, which are obtained from entities or individuals not listed on **Exhibit C**, or from sources unrelated to a Recovery, i.e., via grant, bequest, gift or the like, are excluded from this Agreement.

11. The State of Nevada's share of Recoveries, after deduction of any remaining costs and attorney fees, shall be deposited in the Fund for Resilient Nevada through Senate Bill 390 (2021).

12. Nothing in this Agreement alters or intends to alter or change the right of the State of Nevada or any Local Governments to pursue its own claims against any Defendant through that Parties' separate opioid-related litigation. Rather, the intent of this Agreement is to join all Parties to seek and negotiate binding global settlement or settlements and to obtain Recoveries with one or more Defendants in the State of Nevada or Local Governments opioid-related litigation for the benefit of all Parties to this Agreement.

C. Waiver of Conflict of Interest. Consistent with the intent of this Agreement, the Parties agree that there is no conflict of interest in Counsel representing the Parties to this Agreement, but to the extent Counsel's representation may constitute a conflict of interest, the Parties waive any potential conflict of interest.

D. Reporting. Accountability - Prior to July 1st of each year, or as otherwise required by any Court Order, each of the Local Governments shall provide information to the State, to the attention of Mark J. Krueger, Chief Deputy Attorney General at mkrueger@ag.nv.gov, about how they intend to expend, and how they did expend, their allocated shares of any Recovery/Recoveries to ensure such Recoveries are being used for Approved Purposes only. Local Governments shall respond and provide documents to any reasonable requests from the State for data or information about the use of the Recoveries, including Local Government or third-party programs, services, or infrastructure receiving the Recoveries.

E. Miscellaneous

1. **Construction.** With regard to each and every term and condition of this Agreement, the Parties understand and agree that the same have or has been mutually negotiated, prepared and drafted, and if at any time the Parties are required to interpret or construe any such term or condition, no consideration shall

be given to the issue of which Party actually prepared, drafted or requested any term or condition thereof.

2. **Severability Clause.** In the event any provision or part of this Agreement is found to be invalid or unenforceable, only that particular provision or part so found, and not the entire Agreement, will be inoperative.

3. **Entire Agreement.** This Agreement, contains the entire agreement between the Parties and supersedes and cancels all previous negotiations and agreements, if any.

4. **Governing Law.** This Agreement shall be governed by and construed in accordance with the law of the State of Nevada.

5. **Amendments.** Any and all amendments to this Agreement must be in writing which must be signed by all Parties and must be approved by their respective Commissions, Councils, or Boards.

6. **Signature in Counterparts.** This Agreement may be executed in any number of counterparts, each of which shall be an original and all of which shall together constitute one and the same instrument. This Agreement and any amendments thereto, to the extent signed and delivered by means of a facsimile machine or electronic scan (including in the form of an Adobe Acrobat PDF file format), shall be treated in all manner and respects as an original agreement and shall be considered to have the same binding legal effect as if it were the original signed version thereof.

7. **Legal Advice.** The Parties acknowledge that they have been advised to have this Agreement reviewed by their respective Deputy Attorney Generals, District Attorneys, and City Attorneys (collectively "Government Attorneys") and the

Government Attorneys have had the opportunity to participate in the negotiation of this Agreement.

F. Acknowledgment of Agreement and Binding Authority

This Agreement has been collaboratively drafted to maintain all individual claims and causes of action in each Parties' opioid-related litigations while allowing the State and its Local Governments to cooperate in exploring all possible means of obtaining a Recovery/Recoveries against the Defendants. This Agreement is jointly entered into by the State of Nevada and Local Governments, is approved by the Parties' respective Commissions, Councils, and Boards, and provides binding authority from each Party to the Agreement regarding the resolution through the Negotiating Committee and allocation of any Recovery. However, other than those settlements or other disposition in this Agreement, nothing in this Agreement binds any party to any specific outcome of each Parties' opioid-related litigation.

We, the undersigned, hereby agree to be bound by this Agreement, which shall have an effective date of August 9, 2021.

Executed this 12th day of August, 2021.

STATE OF NEVADA

By: _____ Dated: 8/23/21
NEVADA ATTORNEY GENERAL

CHURCHILL COUNTY

By: _____ Dated: _____
REPRESENTATIVE FOR THE
LOCAL GOVERNMENT

Government Attorneys have had the opportunity to participate in the negotiation of this Agreement.

F. Acknowledgment of Agreement and Binding Authority

This Agreement has been collaboratively drafted to maintain all individual claims and causes of action in each Parties' opioid-related litigations while allowing the State and its Local Governments to cooperate in exploring all possible means of obtaining a Recovery/Recoveries against the Defendants. This Agreement is jointly entered into by the State of Nevada and Local Governments, is approved by the Parties' respective Commissions, Councils, and Boards, and provides binding authority from each Party to the Agreement regarding the resolution through the Negotiating Committee and allocation of any Recovery. However, other than those settlements or other disposition in this Agreement, nothing in this Agreement binds any party to any specific outcome of each Parties' opioid-related litigation.

We, the undersigned, hereby agree to be bound by this Agreement, which shall have an effective date of August 9, 2021.

Executed this _____ day of_____, 2021.

STATE OF NEVADA

By: _____ Dated:_____
NEVADA ATTORNEY GENERAL

CHURCHILL COUNTY

By: _____ Dated: 7/21/21
REPRESENTATIVE FOR THE
LOCAL GOVERNMENT

CLARK COUNTY

By: Marilyn K. Kirkpatrick Dated: August 3, 2021
REPRESENTATIVE FOR THE
LOCAL GOVERNMENT

DOUGLAS COUNTY

By: _____ Dated: _____
REPRESENTATIVE FOR THE
LOCAL GOVERNMENT

ELKO COUNTY

By: _____ Dated: _____
REPRESENTATIVE FOR THE
LOCAL GOVERNMENT

ESMERALDA COUNTY

By: _____ Dated: _____
REPRESENTATIVE FOR THE
LOCAL GOVERNMENT

EUREKA COUNTY

By: _____ Dated: _____
REPRESENTATIVE FOR THE
LOCAL GOVERNMENT

HUMBOLDT COUNTY

By: _____ Dated: _____
REPRESENTATIVE FOR THE
LOCAL GOVERNMENT

CLARK COUNTY

By: _____ Dated: _____
REPRESENTATIVE FOR THE
LOCAL GOVERNMENT

DOUGLAS COUNTY

By: _____ Dated: 8/5/21
REPRESENTATIVE FOR THE
LOCAL GOVERNMENT

ELKO COUNTY

By: _____ Dated: _____
REPRESENTATIVE FOR THE
LOCAL GOVERNMENT

ESMERALDA COUNTY

By: _____ Dated: _____
REPRESENTATIVE FOR THE
LOCAL GOVERNMENT

EUREKA COUNTY

By: _____ Dated: _____
REPRESENTATIVE FOR THE
LOCAL GOVERNMENT

HUMBOLDT COUNTY

By: _____ Dated: _____
REPRESENTATIVE FOR THE
LOCAL GOVERNMENT

CLARK COUNTY

By: _____ Dated: _____
REPRESENTATIVE FOR THE
LOCAL GOVERNMENT

DOUGLAS COUNTY

By: _____ Dated: _____
REPRESENTATIVE FOR THE
LOCAL GOVERNMENT

ELKO COUNTY

By: _____ Dated: August 4, 2021
REPRESENTATIVE FOR THE
LOCAL GOVERNMENT

ESMERALDA COUNTY

By: _____ Dated: _____
REPRESENTATIVE FOR THE
LOCAL GOVERNMENT

EUREKA COUNTY

By: _____ Dated: _____
REPRESENTATIVE FOR THE
LOCAL GOVERNMENT

HUMBOLDT COUNTY

By: _____ Dated: _____
REPRESENTATIVE FOR THE
LOCAL GOVERNMENT

CLARK COUNTY

By: _____ Dated: _____
REPRESENTATIVE FOR THE
LOCAL GOVERNMENT

DOUGLAS COUNTY

By: _____ Dated: _____
REPRESENTATIVE FOR THE
LOCAL GOVERNMENT

ELKO COUNTY

By: _____ Dated: _____
REPRESENTATIVE FOR THE
LOCAL GOVERNMENT

ESMERALDA COUNTY

By: _____ Dated: 8-24-21
REPRESENTATIVE FOR THE
LOCAL GOVERNMENT

EUREKA COUNTY

By: _____ Dated: _____
REPRESENTATIVE FOR THE
LOCAL GOVERNMENT

HUMBOLDT COUNTY

By: _____ Dated: _____
REPRESENTATIVE FOR THE
LOCAL GOVERNMENT

CLARK COUNTY

By: _____ Dated: _____
REPRESENTATIVE FOR THE
LOCAL GOVERNMENT

DOUGLAS COUNTY

By: _____ Dated: _____
REPRESENTATIVE FOR THE
LOCAL GOVERNMENT

ELKO COUNTY

By: _____ Dated: _____
REPRESENTATIVE FOR THE
LOCAL GOVERNMENT

ESMERALDA COUNTY

By: _____ Dated: _____
REPRESENTATIVE FOR THE
LOCAL GOVERNMENT

EUREKA COUNTY

By: _____ Dated: 8-6-2021
REPRESENTATIVE FOR THE
LOCAL GOVERNMENT

HUMBOLDT COUNTY

By: _____ Dated: _____
REPRESENTATIVE FOR THE
LOCAL GOVERNMENT

CLARK COUNTY

By: _____ Dated: _____
REPRESENTATIVE FOR THE
LOCAL GOVERNMENT

DOUGLAS COUNTY

By: _____ Dated: _____
REPRESENTATIVE FOR THE
LOCAL GOVERNMENT

ELKO COUNTY

By: _____ Dated: _____
REPRESENTATIVE FOR THE
LOCAL GOVERNMENT

ESMERALDA COUNTY

By: _____ Dated: _____
REPRESENTATIVE FOR THE
LOCAL GOVERNMENT

EUREKA COUNTY

By: _____ Dated: _____
REPRESENTATIVE FOR THE
LOCAL GOVERNMENT

HUMBOLDT COUNTY

By: Ron Cerri Dated: 8/9/21
REPRESENTATIVE FOR THE
LOCAL GOVERNMENT

LANDER COUNTY

By: _____ Dated: August 12, 2021
REPRESENTATIVE FOR THE
LOCAL GOVERNMENT

LINCOLN COUNTY

By: _____ Dated: _____
REPRESENTATIVE FOR THE
LOCAL GOVERNMENT

LYON COUNTY

By: _____ Dated: _____
REPRESENTATIVE FOR THE
LOCAL GOVERNMENT

MINERAL COUNTY

By: _____ Dated: _____
REPRESENTATIVE FOR THE
LOCAL GOVERNMENT

PERSHING COUNTY

By: _____ Dated: _____
REPRESENTATIVE FOR THE
LOCAL GOVERNMENT

STOREY COUNTY

By: _____ Dated: _____
REPRESENTATIVE FOR THE
LOCAL GOVERNMENT

LANDER COUNTY

By: _____ Dated: _____
REPRESENTATIVE FOR THE
LOCAL GOVERNMENT

LINCOLN COUNTY

By: Byron Foster Dated: 08/02/2021
REPRESENTATIVE FOR THE
LOCAL GOVERNMENT

LYON COUNTY

By: _____ Dated: _____
REPRESENTATIVE FOR THE
LOCAL GOVERNMENT

MINERAL COUNTY

By: _____ Dated: _____
REPRESENTATIVE FOR THE
LOCAL GOVERNMENT

PERSHING COUNTY

By: _____ Dated: _____
REPRESENTATIVE FOR THE
LOCAL GOVERNMENT

STOREY COUNTY

By: _____ Dated: _____
REPRESENTATIVE FOR THE
LOCAL GOVERNMENT

LANDER COUNTY

By: _____ Dated: _____
REPRESENTATIVE FOR THE
LOCAL GOVERNMENT

LINCOLN COUNTY

By: _____ Dated: _____
REPRESENTATIVE FOR THE
LOCAL GOVERNMENT

LYON COUNTY

By: Vidal Keller Dated: 8/5/2021
REPRESENTATIVE FOR THE
LOCAL GOVERNMENT

MINERAL COUNTY

By: _____ Dated: _____
REPRESENTATIVE FOR THE
LOCAL GOVERNMENT

PERSHING COUNTY

By: _____ Dated: _____
REPRESENTATIVE FOR THE
LOCAL GOVERNMENT

STOREY COUNTY

By: _____ Dated: _____
REPRESENTATIVE FOR THE
LOCAL GOVERNMENT

LANDER COUNTY

By: _____ Dated: _____
REPRESENTATIVE FOR THE
LOCAL GOVERNMENT

LINCOLN COUNTY

By: _____ Dated: _____
REPRESENTATIVE FOR THE
LOCAL GOVERNMENT

LYON COUNTY

By: _____ Dated: _____
REPRESENTATIVE FOR THE
LOCAL GOVERNMENT

MINERAL COUNTY

By: _____ Dated: 8-4-21
REPRESENTATIVE FOR THE
LOCAL GOVERNMENT

PERSHING COUNTY

By: _____ Dated: _____
REPRESENTATIVE FOR THE
LOCAL GOVERNMENT

STOREY COUNTY

By: _____ Dated: _____
REPRESENTATIVE FOR THE
LOCAL GOVERNMENT

LANDER COUNTY

By: _____ Dated: _____
REPRESENTATIVE FOR THE
LOCAL GOVERNMENT

LINCOLN COUNTY

By: _____ Dated: _____
REPRESENTATIVE FOR THE
LOCAL GOVERNMENT

LYON COUNTY

By: _____ Dated: _____
REPRESENTATIVE FOR THE
LOCAL GOVERNMENT

MINERAL COUNTY

By: _____ Dated: _____
REPRESENTATIVE FOR THE
LOCAL GOVERNMENT

PERSHING COUNTY

By: _____ Dated: 8/18/2021
REPRESENTATIVE FOR THE
LOCAL GOVERNMENT

STOREY COUNTY

By: _____ Dated: _____
REPRESENTATIVE FOR THE
LOCAL GOVERNMENT

LANDER COUNTY

By: _____ Dated: _____
REPRESENTATIVE FOR THE
LOCAL GOVERNMENT

LINCOLN COUNTY

By: _____ Dated: _____
REPRESENTATIVE FOR THE
LOCAL GOVERNMENT

LYON COUNTY

By: _____ Dated: _____
REPRESENTATIVE FOR THE
LOCAL GOVERNMENT

MINERAL COUNTY

By: _____ Dated: _____
REPRESENTATIVE FOR THE
LOCAL GOVERNMENT

PERSHING COUNTY

By: _____ Dated: _____
REPRESENTATIVE FOR THE
LOCAL GOVERNMENT

STOREY COUNTY

By: _____ Dated: Aug 3, 2021
REPRESENTATIVE FOR THE
LOCAL GOVERNMENT

WASHOE COUNTY

By: _____ Dated: 7/27/21
REPRESENTATIVE FOR THE
LOCAL GOVERNMENT

WHITE PINE COUNTY

By: _____ Dated: _____
REPRESENTATIVE FOR THE
LOCAL GOVERNMENT

BOULDER CITY

By: _____ Dated: _____
REPRESENTATIVE FOR THE
LOCAL GOVERNMENT

NYE COUNTY

By: _____ Dated: _____
REPRESENTATIVE FOR THE
LOCAL GOVERNMENT

CARSON CITY

By: _____ Dated: _____
REPRESENTATIVE FOR THE
LOCAL GOVERNMENT

CITY OF HENDERSON

By: _____ Dated: _____
REPRESENTATIVE FOR THE
LOCAL GOVERNMENT

WASHOE COUNTY

By: _____ Dated: _____
REPRESENTATIVE FOR THE
LOCAL GOVERNMENT

WHITE PINE COUNTY

By: Richard Howe Dated: 8-16-21
REPRESENTATIVE FOR THE
LOCAL GOVERNMENT

BOULDER CITY

By: _____ Dated: _____
REPRESENTATIVE FOR THE
LOCAL GOVERNMENT

NYE COUNTY

By: _____ Dated: _____
REPRESENTATIVE FOR THE
LOCAL GOVERNMENT

CARSON CITY

By: _____ Dated: _____
REPRESENTATIVE FOR THE
LOCAL GOVERNMENT

CITY OF HENDERSON

By: _____ Dated: _____
REPRESENTATIVE FOR THE
LOCAL GOVERNMENT

WASHOE COUNTY

By: _____ Dated: _____
REPRESENTATIVE FOR THE
LOCAL GOVERNMENT

WHITE PINE COUNTY

By: _____ Dated: _____
REPRESENTATIVE FOR THE
LOCAL GOVERNMENT

BOULDER CITY

By: E-SIGNED by Kiernan McManus on 2021-08-23 23:02:43 GMT _____ Dated: August 23, 2021
REPRESENTATIVE FOR THE
LOCAL GOVERNMENT

NYE COUNTY

By: _____ Dated: _____
REPRESENTATIVE FOR THE
LOCAL GOVERNMENT

CARSON CITY

By: _____ Dated: _____
REPRESENTATIVE FOR THE
LOCAL GOVERNMENT

CITY OF HENDERSON

By: _____ Dated: _____
REPRESENTATIVE FOR THE
LOCAL GOVERNMENT

WASHOE COUNTY

By: _____ Dated: _____
REPRESENTATIVE FOR THE
LOCAL GOVERNMENT

WHITE PINE COUNTY

By: _____ Dated: _____
REPRESENTATIVE FOR THE
LOCAL GOVERNMENT

BOULDER CITY

By: _____ Dated: _____
REPRESENTATIVE FOR THE
LOCAL GOVERNMENT

NYE COUNTY

By: Frank Cenbore Dated: 8/3/2021
REPRESENTATIVE FOR THE
LOCAL GOVERNMENT

CARSON CITY

By: _____ Dated: _____
REPRESENTATIVE FOR THE
LOCAL GOVERNMENT

CITY OF HENDERSON

By: _____ Dated: _____
REPRESENTATIVE FOR THE
LOCAL GOVERNMENT

WASHOE COUNTY

By: _____ Dated: _____
REPRESENTATIVE FOR THE
LOCAL GOVERNMENT

WHITE PINE COUNTY

By: _____ Dated: _____
REPRESENTATIVE FOR THE
LOCAL GOVERNMENT

BOULDER CITY

By: _____ Dated: _____
REPRESENTATIVE FOR THE
LOCAL GOVERNMENT

NYE COUNTY

By: _____ Dated: _____
REPRESENTATIVE FOR THE
LOCAL GOVERNMENT

CARSON CITY

By: Lori Bagwell, Mayor Dated: 8/5/21
REPRESENTATIVE FOR THE
LOCAL GOVERNMENT

CITY OF HENDERSON

By: _____ Dated: _____
REPRESENTATIVE FOR THE
LOCAL GOVERNMENT

WASHOE COUNTY

By: _____ Dated: _____
REPRESENTATIVE FOR THE
LOCAL GOVERNMENT

WHITE PINE COUNTY

By: _____ Dated: _____
REPRESENTATIVE FOR THE
LOCAL GOVERNMENT

BOULDER CITY

By: _____ Dated: _____
REPRESENTATIVE FOR THE
LOCAL GOVERNMENT

NYE COUNTY

By: _____ Dated: _____
REPRESENTATIVE FOR THE
LOCAL GOVERNMENT

CARSON CITY

By: _____ Dated: _____
REPRESENTATIVE FOR THE
LOCAL GOVERNMENT

CITY OF HENDERSON

By: _____ Dated: 8/3/21
REPRESENTATIVE FOR THE
LOCAL GOVERNMENT

APPROVED AS TO FORM
7/21/2021
Date

CITY OF LAS VEGAS

By: _____ Dated: 7/21/2021
REPRESENTATIVE FOR THE
LOCAL GOVERNMENT

Attest By: _____
LuAnn D. Holmes, MMC, City Clerk

CITY OF MESQUITE

By: _____ Dated: _____
REPRESENTATIVE FOR THE
LOCAL GOVERNMENT

CITY OF NORTH LAS VEGAS

By: _____ Dated: _____
REPRESENTATIVE FOR THE
LOCAL GOVERNMENT

CITY OF RENO

By: _____ Dated: _____
REPRESENTATIVE FOR THE
LOCAL GOVERNMENT

CITY OF WEST WENDOVER

By: _____ Dated: _____
REPRESENTATIVE FOR THE
LOCAL GOVERNMENT

CITY OF FERNLEY

By: _____ Dated: _____
REPRESENTATIVE FOR THE
LOCAL GOVERNMENT

CITY OF LAS VEGAS

By: _____ Dated: _____
REPRESENTATIVE FOR THE
LOCAL GOVERNMENT

CITY OF MESQUITE

By: _____ Dated: 8-11-2021
REPRESENTATIVE FOR THE
LOCAL GOVERNMENT

CITY OF NORTH LAS VEGAS

By: _____ Dated: _____
REPRESENTATIVE FOR THE
LOCAL GOVERNMENT

CITY OF RENO

By: _____ Dated: _____
REPRESENTATIVE FOR THE
LOCAL GOVERNMENT

CITY OF WEST WENDOVER

By: _____ Dated: _____
REPRESENTATIVE FOR THE
LOCAL GOVERNMENT

CITY OF FERNLEY

By: _____ Dated: _____
REPRESENTATIVE FOR THE
LOCAL GOVERNMENT

CITY OF LAS VEGAS

By: _____ Dated: _____
REPRESENTATIVE FOR THE
LOCAL GOVERNMENT

CITY OF MESQUITE

By: _____ Dated: _____
REPRESENTATIVE FOR THE
LOCAL GOVERNMENT

CITY OF NORTH LAS VEGAS

By: _____ Dated: 8/4/2021
REPRESENTATIVE FOR
THE LOCAL GOVERNMENT
Ryann Juden, City Manager

Attest: _____
Marie E. Purcell, CMC
Acting City Clerk

Approved as to form:

_____
City Attorney

CITY OF RENO

By: _____ Dated: _____
REPRESENTATIVE FOR THE
LOCAL GOVERNMENT

CITY OF WEST WENDOVER

By: _____ Dated: _____
REPRESENTATIVE FOR THE
LOCAL GOVERNMENT

CITY OF FERNLEY

By: _____ Dated: _____
REPRESENTATIVE FOR THE
LOCAL GOVERNMENT

CITY OF LAS VEGAS

By: _____ Dated: _____
REPRESENTATIVE FOR THE
LOCAL GOVERNMENT

CITY OF MESQUITE

By: _____ Dated: _____
REPRESENTATIVE FOR THE
LOCAL GOVERNMENT

CITY OF NORTH LAS VEGAS

By: _____ Dated: _____
REPRESENTATIVE FOR THE
LOCAL GOVERNMENT

CITY OF RENO

By: _____ Dated: 8/10/2021
REPRESENTATIVE FOR THE
LOCAL GOVERNMENT

CITY OF WEST WENDOVER

By: _____ Dated: _____
REPRESENTATIVE FOR THE
LOCAL GOVERNMENT

CITY OF FERNLEY

By: _____ Dated: _____
REPRESENTATIVE FOR THE
LOCAL GOVERNMENT

CITY OF HENDERSON

By: _____ Dated: _____
REPRESENTATIVE FOR THE
LOCAL GOVERNMENT

CITY OF LAS VEGAS

By: _____ Dated: _____
REPRESENTATIVE FOR THE
LOCAL GOVERNMENT

CITY OF MESQUITE

By: _____ Dated: _____
REPRESENTATIVE FOR THE
LOCAL GOVERNMENT

CITY OF NORTH LAS VEGAS

By: _____ Dated: _____
REPRESENTATIVE FOR THE
LOCAL GOVERNMENT

CITY OF RENO

By: _____ Dated: _____
REPRESENTATIVE FOR THE
LOCAL GOVERNMENT

CITY OF WEST WENDOVER

By: _____ Dated: 7/20/21
REPRESENTATIVE FOR THE
LOCAL GOVERNMENT

CITY OF LAS VEGAS

By: _____ Dated: _____
REPRESENTATIVE FOR THE
LOCAL GOVERNMENT

CITY OF MESQUITE

By: _____ Dated: _____
REPRESENTATIVE FOR THE
LOCAL GOVERNMENT

CITY OF NORTH LAS VEGAS

By: _____ Dated: _____
REPRESENTATIVE FOR THE
LOCAL GOVERNMENT

CITY OF RENO

By: _____ Dated: _____
REPRESENTATIVE FOR THE
LOCAL GOVERNMENT

CITY OF WEST WENDOVER

By: _____ Dated: _____
REPRESENTATIVE FOR THE
LOCAL GOVERNMENT

CITY OF FERNLEY

By: _____ Dated: 8/4/2021
REPRESENTATIVE FOR THE
LOCAL GOVERNMENT

CITY OF ELY

By: _____ Dated: 8/12/21
REPRESENTATIVE FOR THE
LOCAL GOVERNMENT

CITY OF SPARKS

By: _____ Dated: _____
REPRESENTATIVE FOR THE
LOCAL GOVERNMENT

NORTHERN LYON COUNTY FIRE
PROTECTION DISTRICT

By: _____ Dated: _____
REPRESENTATIVE FOR THE
LOCAL GOVERNMENT

CENTRAL LYON COUNTY FIRE
PROTECTION DISTRICT

By: _____ Dated: _____
REPRESENTATIVE FOR THE
LOCAL GOVERNMENT

CITY OF ELY

By: _____ Dated:_____
REPRESENTATIVE FOR THE
LOCAL GOVERNMENT

CITY OF SPARKS

By: DocuSigned by: Ed Lawson 2FF0422E72AA4D1... Dated: 8/10/2021
REPRESENTATIVE FOR THE
LOCAL GOVERNMENT

NORTHERN LYON COUNTY FIRE
PROTECTION DISTRICT

By: _____ Dated:_____
REPRESENTATIVE FOR THE
LOCAL GOVERNMENT

CENTRAL LYON COUNTY FIRE
PROTECTION DISTRICT

By: _____ Dated:_____
REPRESENTATIVE FOR THE
LOCAL GOVERNMENT

CITY OF ELY

By: _____ Dated: _____
REPRESENTATIVE FOR THE
LOCAL GOVERNMENT

CITY OF SPARKS

By: _____ Dated: _____
REPRESENTATIVE FOR THE
LOCAL GOVERNMENT

NORTHERN LYON COUNTY FIRE
PROTECTION DISTRICT

By: _____ Dated: 6/5/2021
REPRESENTATIVE FOR THE
LOCAL GOVERNMENT

CENTRAL LYON COUNTY FIRE
PROTECTION DISTRICT

By: _____ Dated: _____
REPRESENTATIVE FOR THE
LOCAL GOVERNMENT

CITY OF ELY

By: _____ Dated: _____
REPRESENTATIVE FOR THE
LOCAL GOVERNMENT

CITY OF SPARKS

By: _____ Dated: _____
REPRESENTATIVE FOR THE
LOCAL GOVERNMENT

NORTHERN LYON COUNTY FIRE
PROTECTION DISTRICT

By: _____ Dated: _____
REPRESENTATIVE FOR THE
LOCAL GOVERNMENT

CENTRAL LYON COUNTY FIRE
PROTECTION DISTRICT

By: _____ Dated: 8/12/21
REPRESENTATIVE FOR THE
LOCAL GOVERNMENT

EXHIBIT A

LOCAL GOVERNMENT	COURT	CASE NO.
Carson City	1st Judicial District Court	20TRT00471B
Clark County	8th Judicial District Court	A-17-765828-C *Transferred to MDL*
Churchill County	10th Judicial District Court	20-10DC-0805
Douglas County	9th Judicial District Court	2020CV00139
Elko County		
Esmeralda County	5th Judicial District Court	CV20-5117
Eureka County		
Humboldt County	6th Judicial District Court	CV0022306
Lander County		
Lincoln County	7th Judicial District Court	CV0702620
Lyon County	3rd Judicial District Court	20-CV-00795
Nye County	MDL	1:18-op-46238-DAP
Northern Lyon County Fire Protection District	3rd Judicial District Court	20-CV-00795
Central Lyon County Fire Protection District	3rd Judicial District Court	20-CV-00795
Mineral County	11th Judicial District Court	21CV-TT12-2020-0104
Pershing County		
Storey County		
Washoe County	2nd Judicial District Court	CV20-01142
White Pine County	7th Judicial District Court	CV-2007076
City of West Wendover	4th Judicial District Court	DC-CV-20-70

EXHIBIT A

City of Fernley	3rd Judicial District Court	20-CV-00796
City of Sparks	2nd Judicial District Court	CV20-01152
City of Ely	7th Judicial District Court	CV-2007077
City of Las Vegas	8th Judicial District Court	A-19-800697-B
City of North Las Vegas	8th Judicial District Court	A-19-800699-B
City of Henderson	8th Judicial District Court	A-19-800695-B
City of Reno	2nd Judicial District Court	CV18-01895
City of Mesquite	U.S District Court, District of Nevada	2:19-cv-01058 *Transferred to MDL*
Boulder City	U.S District Court, District of Nevada	2:19-cv-01057 *Transferred to MDL*

EXHIBIT B

LITIGATING CITIES AND DISTRICTS	COURT	CASE NO.
City of West Wendover	4th Judicial District Court	DC-CV-20-70
City of Fernley	3rd Judicial District Court	20-CV-00796
City of Sparks	2nd Judicial District Court	CV20-01152
City of Ely	7th Judicial District Court	CV-2007077
City of Las Vegas	8th Judicial District Court	A-19-800697-B
City of North Las Vegas	8th Judicial District Court	A-19-800699-B
City of Henderson	8th Judicial District Court	A-19-800695-B
City of Reno	2nd Judicial District Court	CV18-01895
City of Mesquite	U.S District Court, District of Nevada	2:19-cv-01058 *Transferred to MDL*
Boulder City	U.S District Court, District of Nevada	2:19-cv-01057 *Transferred to MDL*
Northern Lyon County Fire Protection District	3rd Judicial District Court	20-CV-00795
Central Lyon County Fire Protection District	3rd Judicial District Court	20-CV-00795

EXHIBIT C

DEFENDANTS
A&H KATSCHKE LTD dba MEADOW VALLEY PHARMACY
ACTAVIS INC f/k/a WATSON PHARMACEUTICALS INC
ACTAVIS PHARMA, INC. f/k/a WATSON PHARMA, INC
ACTAVIS PHARMA, INC.
ACTAVIS, LLC
ADAM KATSCHKE
AIDA B MAXAM
ALEC BURLAKOFF
ALEJANDRO JIMINEZ INCERA
ALLERGAN FINANCE, LLC (fka ACTAVIS, INC. fka WATSON PHARMACEUTICALS, INC.)
ALLERGAN INC
ALLERGAN PLC f/k/a ACTAVIS PLC
ALLERGAN USA INC
AMERICAN DRUG STORES
AMERISOURCEBERGEN DRUG CORPORATION
ANDA PHARMACEUTICALS, INC.
ANDA, INC
BAILY STORES LLC dba PROFESSIONAL PHARMACY
BEACON COMPANY
BEVERLY SACKLER
BOB TUCKER, INC. dba BOB TUCKER'S UNITED DRUG
C&R PHARMACY d/b/a KEN'S PHARMACY f/k/a LAM'S PHARMACY
CARDINAL HEALTH 105, INC.
CARDINAL HEALTH 108 LLC D/B/A METRO MEDICAL SUPPLY
CARDINAL HEALTH 108, LLC
CARDINAL HEALTH 110, LLC
CARDINAL HEALTH 200, LLC
CARDINAL HEALTH 414, LLC
CARDINAL HEALTH 6 INC
CARDINAL HEALTH INC.
CARDINAL HEALTH PHARMACY SERVICES, LLC
CARDINAL HEALTH TECHNOLOGIES
CARDIOLOGY PC
CEPHALON, INC.
CVS HEALTH CORP.
CVS INDIANA
CVS PHARMACY, INC.

EXHIBIT C

CVS RX SERVICES INC
CVS TN DISTRIBUTION LLC
DAVID A. SACKLER
DEPOMED, INC
DEREK BRADDIX, APRN
DEVENDRA I. PATEL
DEVENDRA I. PATEL
ECONOMY DRUG
ECONOMY DRUG INC
ENDO HEALTH SOLUTIONS INC.
ENDO INTERNATIONAL PLC
ENDO PHARMACEUTICALS, INC.
GARY C RIDENOUR A PROFESSIONAL CORPORATION dba HIGH DESERT CLINIC
GARY C RIDENOUR dba HIGH DESERT CLINIC
GARY C. RIDENOUR MD
HOLPER OUT-PATIENTS MEDICAL CENTER, LTD
HORACE PAUL GUERRA IV
ILENE SACKLER LEFCOURT
INCERA LLC
INCERA-IUVENTUS MEDICAL GROUP PC
INSYS THERAPEUTICS, INC.
JANSSEN PHARMACEUTICA INC. n/k/a JANSSEN PHARMACEUTICALS, INC.
JANSSEN PHARMACEUTICALS, INC.
JOHN KAPOOR
JOHNSON & JOHNSON
JOLLY'S DRUG STORE LLC dba JOLLY'S DRUG STORE
JONATHAN D. SACKLER
JOSEPH A ROWAN
KATHE A. SACKLER
KROGER LIMITED PARTNERSHIP II D/B/A PEYTON'S NORTHERN
LONGS DRUG STORE CALIFORNIA LLC
MALLINCKRODT BRAND PHARMACEUTICALS INC
MALLINCKRODT LLC
MALLINCKRODT PLC
MALLINCKRODT US HOLDINGS, INC.
MASTERS PHARMACEUTICAL, LLC. f/k/a MASTERS PHARMACEUTICAL INC
MCKESSON CORPORATION
MICHAEL BABICH

EXHIBIT C

MORTIMER D.A. SACKLER
NORAMCO, INC.
OMNICARE DISTRIBUTION CENTER LLC
ORTHOMCNEIL-JANSSEN PHARMACEUTICALS, INC. n/k/a JANSSEN PHARMACEUTICALS, INC
P.F. LABORATORIES, INC.
PAR PHARMACEUTICAL COMPANIES.
PAR PHARMACEUTICAL, INC.
PATEL NORTH EASTERN NEVADA
PATEL NORTHEASTERN NEVADA CARDIOLOGY PC
PLP ASSOCIATES HOLDINGS L.P.
PURDUE HOLDINGS, L.P.
PURDUE PHARMA L.P.
PURDUE PHARMA, INC.
PURDUE PHARMACEUTICALS LP
RAND FAMILY CARE LLC
REX DRUG CO. dba REX DRUG
RICHARD M SIMON
RICHARD S. SACKLER
RITE AID CORPORATION
RITE AID OF MARYLAND, INC. D/B/A RITE AID MID-ATLANTIC CUSTOMER SUPPORT CENTER, INC.
ROBERT D. HARVEY
ROBERT GENE RAND
ROSEBAY MEDICAL COMPANY L.P.
SAFEWAY INC. dba SAFEWAY PHARMACY #2255
SCOLARI'S FOOD & DRUG COMPANY aka SCOLARI'S PHARMACY #23
SCOLARI'S WAREHOUSE MARKETS, INC.
SHOUPING LI
SMITH'S FOOD & DRUG CENTERS, INC. D/B/A PEYTON'S PHOENIX
SPECGX LLC
STEVEN A HOLPER MD PROFESSIONAL CORPORATION;
STEVEN A. HOLPER
SUNRISE LEE
TEVA PHARMACEUTICAL INDUSTRIES, LTD.
TEVA PHARMACEUTICALS USA.
THE KROGER CO
THE PILL BOX LLC dba THE PILL BOX

EXHIBIT C

THE PURDUE FREDERICK COMPANY, INC. d/b/a THE PURDUE FREDERICK COMPANY INC.
THE PURDUE FREDERICK COMPANY, INC.
THERESA SACKLER
THRIFTY PAYLESS, INC
WALGREEN CO.
WALGREEN EASTERN CO., INC
WALGREENS BOOTS ALLIANCE, INC.;
WALMART INC.
WATSON LABORATORIES, INC.
WATSON PHARMACEUTICALS, INC. n/k/a ACTAVIS, INC.

EXHIBIT D

LOCAL GOVERNMENTS ALLOCATION (38.77%)	
Government Entity	**Percentage**
CARSON CITY	1.075935%
CHURCHILL COUNTY	0.326145%
CLARK COUNTY	66.975937%
DOUGLAS COUNTY	1.045568%
ELKO COUNTY	0.637853%
ESMERALDA COUNTY	0.047413%
EUREKA COUNTY	0.143721%
HUMBOLDT COUNTY	1.000680%
LANDER COUNTY	0.548128%
LINCOLN COUNTY	0.198633%
LYON COUNTY	0.685710%
MINERAL COUNTY	0.734928%
NYE COUNTY	1.026687%
PERSHING COUNTY	0.514733%
STOREY COUNTY	0.130572%
WASHOE COUNTY	6.841995%
WHITE PINE COUNTY	1.235851%
BOULDER CITY	0.214114%
ELY CITY	0.009582%
FERNLEY CITY	0.020925%
HENDERSON CITY	3.333451%
LAS VEGAS CITY	6.835696%
MESQUITE CITY	0.212146%
NORTH LAS VEGAS CITY	3.512749%
RENO CITY	1.963939%
SPARKS CITY	0.615879%
WEST WENDOVER CITY	0.081671%
CENTRAL LYON FIRE PROTECTION DISTRICT	0.021854%
NORTH LYON FIRE PROTECTION DISTRICT	0.007505%

EXHIBIT E

MEDICAID MATCH ALLOCATION (17.37%) (65:14:21 - Population)	
Government Entity	**Percentage**
CARSON CITY	3.434222%
CHURCHILL COUNTY	1.529849%
CLARK COUNTY	65%
DOUGLAS COUNTY	3.003624%
ELKO COUNTY	3.241494%
ESMERALDA COUNTY	0.053617%
EUREKA COUNTY	0.124616%
HUMBOLDT COUNTY	1.033718%
LANDER COUNTY	0.339762%
LINCOLN COUNTY	0.318327%
LYON COUNTY	3.532121%
MINERAL COUNTY	0.276686%
NYE COUNTY	2.857327%
PERSHING COUNTY	0.413033%
STOREY COUNTY	0.253224%
WASHOE COUNTY	14%
WHITE PINE COUNTY	0.588380%

EXHIBIT F

LITIGATING COUNTIES ALLOCATION	
Government Entity	**Percentage**
CARSON CITY	1.325117%
CHURCHILL COUNTY	0.401679%
CLARK COUNTY	82.487271%
DOUGLAS COUNTY	1.287717%
ESMERALDA COUNTY	0.058394%
HUMBOLDT COUNTY	1.232434%
LINCOLN COUNTY	0.244635%
LYON COUNTY	0.844517%
MINERAL COUNTY	0.905134%
NYE COUNTY	1.264463%
WASHOE COUNTY	8.426571%
WHITE PINE COUNTY	1.522068%

EXHIBIT K
Subdivision and Special District Settlement Participation Form

Governmental Entity:	State:
Authorized Official:	
Address 1:	
Address 2:	
City, State, Zip:	
Phone:	
Email:	

The governmental entity identified above ("*Governmental Entity*"), in order to obtain and in consideration for the benefits provided to the Governmental Entity pursuant to the Agreement dated November 22, 2022 ("*Allergan Settlement*"), and acting through the undersigned authorized official, hereby elects to participate in the Allergan Settlement, release all Released Claims against all Released Entities, and agrees as follows.

1. The Governmental Entity is aware of and has reviewed the Allergan Settlement, understands that all terms in this Election and Release have the meanings defined therein, and agrees that by this Election, the Governmental Entity elects to participate in the Allergan Settlement as provided therein.

2. Following the execution of this Settlement Participation Form, the Governmental Entity shall comply with Section III.B of the Allergan Settlement regarding Cessation of Litigation Activities.

3. The Governmental Entity shall, within fourteen (14) days of the Reference Date and prior to the filing of the Consent Judgment, file a request to dismiss with prejudice any Released Claims that it has filed. With respect to any Released Claims pending in *In re National Prescription Opiate Litigation*, MDL No. 2804, the Governmental Entity authorizes the MDL Plaintiffs' Executive Committee to execute and file on behalf of the Governmental Entity a Stipulation of Dismissal With Prejudice substantially in the form found at [link to national settlement website page to be provided].

4. The Governmental Entity agrees to the terms of the Allergan Settlement pertaining to Subdivisions and Special Districts as defined therein.

5. By agreeing to the terms of the Allergan Settlement and becoming a Releasor, the Governmental Entity is entitled to the benefits provided therein, including, if applicable, monetary payments beginning after the Effective Date.

6. The Governmental Entity agrees to use any monies it receives through the Allergan Settlement solely for the purposes provided therein.

7. The Governmental Entity submits to the jurisdiction of the court in the Governmental Entity's state where the Consent Judgment is filed for purposes limited to that court's role as provided in, and for resolving disputes to the extent provided in, the Allergan Settlement.

8. The Governmental Entity has the right to enforce the Allergan Settlement as provided therein.

9. The Governmental Entity, as a Participating Subdivision or Participating Special District, hereby becomes a Releasor for all purposes in the Allergan Settlement, including, but not limited to, all provisions of **Section V (Release)**, and along with all departments, agencies, divisions, boards, commissions, Subdivisions, districts, instrumentalities of any kind and attorneys, and any person in their official capacity whether elected or appointed to serve any of the foregoing and any agency, person, or other entity claiming by or through any of the foregoing, and any other entity identified in the definition of Releasor, provides for a release to the fullest extent of its authority. As a Releasor, the Governmental Entity hereby absolutely, unconditionally, and irrevocably covenants not to bring, file, or claim, or to cause, assist in bringing, or permit to be brought, filed, or claimed, or to otherwise seek to establish liability for any Released Claims against any Released Entity in any forum whatsoever. The releases provided for in the Allergan Settlement are intended to be broad and shall be interpreted so as to give the Released Entities the broadest possible bar against any liability relating in any way to Released Claims and extend to the full extent of the power of the Governmental Entity to release claims. The Allergan Settlement shall be a complete bar to any Released Claim.

10. The Governmental Entity hereby takes on all rights and obligations of a Participating Subdivision or Participating Special District as set forth in the Allergan Settlement.

11. In connection with the releases provided for in the Allergan Settlement, each Governmental Entity expressly waives, releases, and forever discharges any and all provisions, rights, and benefits conferred by any law of any state or territory of the United States or other jurisdiction, or principle of common law, which is similar, comparable, or equivalent to § 1542 of the California Civil Code, which reads:

> **General Release; extent.** A general release does not extend to claims that the creditor or releasing party does not know or suspect to exist in his or her favor at the time of executing the release that, if known by him or her, would have materially affected his or her settlement with the debtor or released party.

A Releasor may hereafter discover facts other than or different from those which it knows, believes, or assumes to be true with respect to the Released Claims, but each Governmental Entity hereby expressly waives and fully, finally, and forever settles, releases and discharges, upon the Effective Date, any and all Released Claims that may exist as of such date but which Releasors do not know or suspect to exist, whether through ignorance, oversight, error, negligence or through no fault whatsoever, and which, if known, would

materially affect the Governmental Entities' decision to participate in the Allergan Settlement.

12. Nothing herein is intended to modify in any way the terms of the Allergan Settlement, to which the Governmental Entity hereby agrees. To the extent this Settlement Participation Form is interpreted differently from the Allergan Settlement in any respect, the Allergan Settlement controls.

I have all necessary power and authorization to execute this Settlement Participation Form on behalf of the Governmental Entity.

Signature: _____

Name: _____

Title: _____

Date: _____

EXHIBIT K
Subdivision and Special District Settlement Participation Form

Governmental Entity:	State:
Authorized Official:	
Address 1:	
Address 2:	
City, State, Zip:	
Phone:	
Email:	

The governmental entity identified above ("*Governmental Entity*"), in order to obtain and in consideration for the benefits provided to the Governmental Entity pursuant to the Agreement dated November 22, 2022 ("*Allergan Settlement*"), and acting through the undersigned authorized official, hereby elects to participate in the Allergan Settlement, release all Released Claims against all Released Entities, and agrees as follows.

1. The Governmental Entity is aware of and has reviewed the Allergan Settlement, understands that all terms in this Election and Release have the meanings defined therein, and agrees that by this Election, the Governmental Entity elects to participate in the Allergan Settlement as provided therein.

2. Following the execution of this Settlement Participation Form, the Governmental Entity shall comply with Section III.B of the Allergan Settlement regarding Cessation of Litigation Activities.

3. The Governmental Entity shall, within fourteen (14) days of the Reference Date and prior to the filing of the Consent Judgment, file a request to dismiss with prejudice any Released Claims that it has filed. With respect to any Released Claims pending in *In re National Prescription Opiate Litigation*, MDL No. 2804, the Governmental Entity authorizes the MDL Plaintiffs' Executive Committee to execute and file on behalf of the Governmental Entity a Stipulation of Dismissal With Prejudice substantially in the form found at [link to national settlement website page to be provided].

4. The Governmental Entity agrees to the terms of the Allergan Settlement pertaining to Subdivisions and Special Districts as defined therein.

5. By agreeing to the terms of the Allergan Settlement and becoming a Releasor, the Governmental Entity is entitled to the benefits provided therein, including, if applicable, monetary payments beginning after the Effective Date.

6. The Governmental Entity agrees to use any monies it receives through the Allergan Settlement solely for the purposes provided therein.

7. The Governmental Entity submits to the jurisdiction of the court in the Governmental Entity's state where the Consent Judgment is filed for purposes limited to that court's role as provided in, and for resolving disputes to the extent provided in, the Allergan Settlement.

8. The Governmental Entity has the right to enforce the Allergan Settlement as provided therein.

9. The Governmental Entity, as a Participating Subdivision or Participating Special District, hereby becomes a Releasor for all purposes in the Allergan Settlement, including, but not limited to, all provisions of **Section V (Release)**, and along with all departments, agencies, divisions, boards, commissions, Subdivisions, districts, instrumentalities of any kind and attorneys, and any person in their official capacity whether elected or appointed to serve any of the foregoing and any agency, person, or other entity claiming by or through any of the foregoing, and any other entity identified in the definition of Releasor, provides for a release to the fullest extent of its authority. As a Releasor, the Governmental Entity hereby absolutely, unconditionally, and irrevocably covenants not to bring, file, or claim, or to cause, assist in bringing, or permit to be brought, filed, or claimed, or to otherwise seek to establish liability for any Released Claims against any Released Entity in any forum whatsoever. The releases provided for in the Allergan Settlement are intended to be broad and shall be interpreted so as to give the Released Entities the broadest possible bar against any liability relating in any way to Released Claims and extend to the full extent of the power of the Governmental Entity to release claims. The Allergan Settlement shall be a complete bar to any Released Claim.

10. The Governmental Entity hereby takes on all rights and obligations of a Participating Subdivision or Participating Special District as set forth in the Allergan Settlement.

11. In connection with the releases provided for in the Allergan Settlement, each Governmental Entity expressly waives, releases, and forever discharges any and all provisions, rights, and benefits conferred by any law of any state or territory of the United States or other jurisdiction, or principle of common law, which is similar, comparable, or equivalent to § 1542 of the California Civil Code, which reads:

> **General Release; extent.** A general release does not extend to claims that the creditor or releasing party does not know or suspect to exist in his or her favor at the time of executing the release that, if known by him or her, would have materially affected his or her settlement with the debtor or released party.

A Releasor may hereafter discover facts other than or different from those which it knows, believes, or assumes to be true with respect to the Released Claims, but each Governmental Entity hereby expressly waives and fully, finally, and forever settles, releases and discharges, upon the Effective Date, any and all Released Claims that may exist as of such date but which Releasors do not know or suspect to exist, whether through ignorance, oversight, error, negligence or through no fault whatsoever, and which, if known, would

materially affect the Governmental Entities' decision to participate in the Allergan Settlement.

12. Nothing herein is intended to modify in any way the terms of the Allergan Settlement, to which the Governmental Entity hereby agrees. To the extent this Settlement Participation Form is interpreted differently from the Allergan Settlement in any respect, the Allergan Settlement controls.

I have all necessary power and authorization to execute this Settlement Participation Form on behalf of the Governmental Entity.

Signature: _____

Name: _____

Title: _____

Date: _____

ALLERGAN SETTLEMENT (ESTIMATED PAYMENTS 1-7)
OPIOID LITIGATION SETTLEMENT CALCULATOR

TOTAL NEVADA RECOVERY	**$ 26,508,913.00**
ANNUAL PAYMENT AMOUNT (7 TOTAL)*	**$ 3,786,987.57**
LEAD LITIGATOR COSTS ESTIMATE* **	
FEDERAL GOVERNMENT CMS MEDICAID COSTS (22.52%)	
ALLOCATION AMOUNT ESTIMATE (7 TOTAL)	**$ 3,786,987.57**

GOVERNMENT ENTITY	GROSS ALLOCATION	ATTORNEY FEES**	ANNUAL NET ALLOCATION	TOTAL NET ALLOCATION
STATE OF NEVADA	$ 1,660,972.77	$ 123,850.77	$ 1,537,122.00	$ 10,759,854.04
CARSON CITY	$ 38,578.68	$ 4,805.56	$ 33,773.12	$ 236,411.83
CHURCHILL COUNTY	$ 14,909.85	$ 1,857.25	$ 13,052.60	$ 91,368.21
CLARK COUNTY	$ 1,422,831.22	$ 177,235.26	$ 1,245,595.96	$ 8,719,171.75
DOUGLAS COUNTY	$ 35,294.96	$ 4,396.52	$ 30,898.44	$ 216,289.06
ELKO COUNTY	$ 23,015.69	$ -	$ 23,015.69	$ 161,109.83
ESMERALDA COUNTY	$ 1,057.25	$ 131.70	$ 925.55	$ 6,478.88
EUREKA COUNTY	$ 2,197.39	$ -	$ 2,197.39	$ 15,381.73
HUMBOLDT COUNTY	$ 21,669.88	$ 2,699.31	$ 18,970.57	$ 132,793.97
LANDER COUNTY	$ 7,711.99	$ -	$ 7,711.99	$ 53,983.93
LINCOLN COUNTY	$ 5,045.64	$ 628.51	$ 4,417.13	$ 30,919.90
LYON COUNTY	$ 33,423.92	$ 4,163.46	$ 29,260.46	$ 204,823.24
MINERAL COUNTY	$ 12,741.06	$ 1,587.09	$ 11,153.97	$ 78,077.77
NYE COUNTY	$ 34,052.04	$ 4,241.70	$ 29,810.34	$ 208,672.38
PERSHING COUNTY	$ 7,705.74	$ -	$ 7,705.74	$ 53,940.18
STOREY COUNTY	$ 2,687.09	$ -	$ 2,687.09	$ 18,809.63
WASHOE COUNTY	$ 193,763.90	$ 24,136.24	$ 169,627.66	$ 1,187,393.62
WHITE PINE COUNTY	$ 22,235.09	$ 2,769.72	$ 19,465.37	$ 136,257.60
BOULDER CITY	$ 3,143.65	$ 391.59	$ 2,752.06	$ 19,264.42
ELY CITY	$ 140.68	$ 17.52	$ 123.16	$ 862.09
FERNLEY CITY	$ 307.22	$ 38.27	$ 268.95	$ 1,882.65
HENDERSON CITY	$ 48,942.23	$ 6,096.50	$ 42,845.73	$ 299,920.12
LAS VEGAS CITY	$ 100,362.72	$ 12,501.70	$ 87,861.02	$ 615,027.12
MESQUITE CITY	$ 3,114.76	$ 387.99	$ 2,726.77	$ 19,087.39
NORTH LAS VEGAS CITY	$ 51,574.71	$ 6,424.41	$ 45,150.30	$ 316,052.07
RENO CITY	$ 28,834.85	$ 3,591.82	$ 25,243.03	$ 176,701.22
SPARKS CITY	$ 9,042.43	$ 1,126.37	$ 7,916.06	$ 55,412.41
WEST WENDOVER CITY	$ 1,199.11	$ 149.37	$ 1,049.74	$ 7,348.20
CENTRAL LYON FIRE PROTECTION DISTRICT	$ 320.86	$ 39.97	$ 280.89	$ 1,966.24
NORTH LYON FIRE PROTECTION DISTRICT	$ 110.19	$ 13.73	$ 96.46	$ 675.25
TOTAL:	**$ 3,786,987.57**	**$ 383,282.32**	**$ 3,403,705.25**	**$ 23,825,936.73**

*Estimated 7 equal annual payments to be disbursed.

**Total attorney fees of $5,970,081.48 have an adjusted credit of $3,287,105.21 (included in the settlement); remaining attorney fees will be deducted from each disbursment.

***There are no costs deducted from this settlement.

ALLERGAN NEVADA STATE-WIDE OPIOID SETTLEMENT TERM SHEET

I. OVERVIEW

This Term Sheet sets forth the principal terms and conditions of a full and final settlement between Allergan Finance, LLC, Allergan Limited, Allergan USA, Inc., and Allergan, Inc. (the "Allergan Defendants" or "Allergan") and the State of Nevada (collectively, "the Parties") to resolve opioid-related Claims against Allergan. This agreement is with Allergan only, and nothing in this Agreement shall inure to the benefit of any Teva entity, including but not limited to Teva Pharmaceuticals USA and Teva Pharmaceutical Industries, Ltd.

This Agreement resolves Allergan's portion of *State of Nevada v. McKesson Corporation et al.*, Case No. A-19-796755-B (Nev. Dist. Ct., Clark Cnty.).

II. DEFINITIONS[1]

A. "*Action*" means of *State of Nevada v. McKesson Corporation et al.*, Case No. A-19-796755- B (Nev. Dist. Ct., Clark Cnty.).

B. "*Agreement*" means this term sheet.

C. "*Global Settlement*" means the Allergan Public Global Settlement Agreement pertaining to opioid litigations, dated November 22, 2022, resolving the litigation and claims brought or threatened to be brought by states and subdivisions against Allergan, including claims against Allergan asserted in the multi-district litigation *In re: Nationwide Prescription Opiate Litigation,* MDL No. 2804 (N.D. Ohio) ("MDL") and state court prescription opiate litigation. A copy of the Global Settlement is attached as Exhibit A.

D. "*State*" means the State of Nevada.

E. "*Court*" means the court where the Action is pending, the Clark County District Court, State of Nevada.

III. SEVERANCE AND DISMISSAL OF ACTION

A. The Parties shall work cooperatively to promptly file: (1) a Consent Judgment with the Court in the State Action; (2) a Stipulation and Order of Dismissal in the State Action seeking dismissal with prejudice of the State's claims, and (3) Notice of Dismissals in all Nevada Litigating Subdivision and Litigating Special District actions seeking a dismissal with prejudice of their claims against Allergan.

IV. INCORPORATION OF TERMS IN GLOBAL SETTLEMENT

A. The State of Nevada is considered a Non-Settling State under the terms of the Global Settlement. Nonetheless, the provisions of the Global Settlement are incorporated into this Agreement by reference, regardless of whether the Global Settlement becomes

[1] Capitalized terms not defined in this Agreement have the same meaning they have in the Global Settlement.

effective, and shall govern the agreement among the Parties, except as modified by this Agreement. A copy of the Global Settlement is attached as Exhibit A.

V. MONETARY RELIEF AND PAYMENTS

A. Allergan agrees to the following terms:

1. Agreed payment by Allergan to the State of Nevada shall be $29,796,018.21, inclusive of all attorneys' fees ("Total Payment"). The Total Payment shall be comprised of $26,508,913.00 for remediation and restitution ("Remediation Payment") and $3,287,105.21 for attorneys' fees ("Attorney Fees Payment").

2. Provided that the necessary W-9 form is provided to Allergan and Allergan's Bank Verification Form process is completed at least 21 days before payment is due, Allergan shall pay: (1) the Remediation Payment in seven equal annual installments of $3,786,987.57 over seven years in July of each year from July 2023 to July 2029; and (2) the Attorney Fees Payment in one installment of $3,287,105.21 in July 2024. However, Allergan shall not be required to pay the first annual Remediation Payment or the Attorney Fees Payment until the State of Nevada dismisses the Action with prejudice.

B. Allergan's payments under this Section V.A shall extinguish Allergan's obligation to pay any other payments to the State, its Subdivisions, or its Special Districts as identified in the One Nevada Agreement, attached hereto as Exhibit C. As provided by the One Nevada Agreement, Allergan shall not have any obligation to pay any payments to Subdivisions or Special Districts not identified in the One Nevada Agreement.

VI. ATTORNEY GENERAL'S REPRESENTATION AND WARRANTY

A. The State, acting through the Attorney General of Nevada, by executing this Agreement, represents and warrants that the One Nevada Agreement among the State and its Subdivisions and Special Districts will ensure that all Litigating Subdivisions, Litigating Special Districts, Non-Litigating Primary Subdivisions, and Non-Litigating Covered Special Districts as identified in the One Nevada Agreement, will become Participating Subdivisions or Participating Special Districts. The State acknowledges the materiality of the foregoing representation and warranty.

VII. SUBDIVISION SETTLEMENT PARTICIPATION FORM

A. The Global Settlement's Settlement Participation Form shall be modified to reflect the terms of this Agreement. The modified Settlement Participation Form is attached to this Agreement as Exhibit B.

VIII. OTHER TERMS

A. To the extent a provision in the Global Settlement is not inconsistent with this Agreement, such a provision is incorporated into this Agreement by reference and the Parties agree to such a provision.

B. For the avoidance of doubt, the State of Nevada and Allergan expressly agree that they have incorporated by reference the following sections of Allergan's Global Settlement (the listing of which does not imply other sections are not incorporated): (a) the definitions of Affiliated Companies, Allergan, Claim, Covered Conduct, Product, Released Claims, Released Entities, and Releasors in Section I ("Definitions"); (b) Section V ("Release"); (c) Section VI.C (the 56% generics and 44% branded allocation of the Total Payment); and (d) Section XV ("Judgment and Settlement Set-Off Related to Teva").

C. For the avoidance of doubt, the scope of the release provided by this Agreement is consistent with the release contained in the Global Settlement, including as to the scope of Released Claims, Released Entities, and Releasors, as defined in the Global Settlement.

D. For the purposes of this Agreement, all references to the "Agreement" in Section XVI ("Miscellaneous") of the Global Settlement shall be construed to refer to both the Global Settlement and this Agreement.

E. The State of Nevada and Allergan agree that this Agreement is entered into both (a) after the close of expert discovery in the Action; and (b) after a date ninety (90) calendar days prior to the scheduled start date of a trial between Allergan and the State.

F. The Parties agree to coordinate the announcement of the settlement by announcing it to the Court on February 21, 2023.

ALLERGAN

Signature

Scott T. Reents

Executive Vice President,
Chief Financial Officer of AbbVie Inc.
Chief Financial Officer, Allergan Limited
Treasurer, Allergan Finance, LLC
1 North Waukegan Road
North Chicago, IL 60064
On Behalf of Allergan and AbbVie

Date

STATE OF NEVADA

Signature

Aaron D. Ford

Attorney General of Nevada
100 North Carson Street
Carson City, Nevada 89701-4717

02/20/2023
Date

ALLERGAN PUBLIC GLOBAL OPIOID SETTLEMENT AGREEMENT

I. Definitions 2
II. Participation by States and Condition to Preliminary Agreement 18
III. Cessation of Litigation Activities 19
IV. Injunctive Relief 20
V. Release 20
VI. Monetary Relief Overview and Maximum Payments 25
VII. Annual Payments to Settlement Fund 26
VIII. Allocation and Use of Settlement Funds 38
IX. Participation by Subdivisions and Special Districts 44
X. Condition to Effectiveness of Agreement and Filing of Consent Judgment 49
XI. Potential Payment Adjustments 49
XII. Additional Restitution Amount 50
XIII. Plaintiffs' Attorneys' Fees and Costs 51
XIV. Enforcement and Dispute Resolution 51
XV. Judgment and Settlement Set-Off Related to Teva 57
XVI. Miscellaneous 58

ALLERGAN PUBLIC GLOBAL OPIOID SETTLEMENT AGREEMENT

Whereas, the Settling States, Participating Subdivisions, Participating Special Districts, and Allergan (as those terms are defined below) share a common desire to resolve disputes between them relating to opioid medications according to the terms set out in this agreement dated as of November 22, 2022 (the "*Agreement*");

Whereas, the Parties, Participating Subdivisions, and Participating Special Districts agree and understand that upon satisfaction of the conditions set forth in Sections II and XI, this Agreement will be binding on the Settling States, Allergan, Participating Subdivisions, and Participating Special Districts;

Whereas, the Parties, Participating Subdivisions, and Participating Special Districts agree and understand that this Agreement will then be filed as part of Consent Judgments in the respective courts of each of the Settling States, pursuant to the terms set forth in Section III;

Whereas, the Parties, Participating Subdivisions, and Participating Special Districts agree and understand that they shall at all times act in good faith to implement and execute their obligations under this Agreement and shall not act in any way to purposefully frustrate the right of any party to receive the benefits due under the Agreement;

Whereas, the Parties, Participating Subdivisions, and Participating Special Districts to this Agreement now desire to avoid further expense and proceedings and to settle their disputes under the terms and conditions of this Agreement as set forth below;

NOW, THEREFORE, IT IS HEREBY AGREED by and between the Parties, Participating Subdivisions, and Participating Special Districts by and through their respective counsel, as follows:

I. Definitions

Unless otherwise specified, the following definitions apply:

1. "*Abatement Accounts Fund*" means a component of the Settlement Fund described in subsection VIII.F.

2. "*Additional Restitution Amount*" means the amount available to Settling States listed in Exhibit M of $16,192,680.76.

3. "*Affiliated Company(ies)*" means (1) when used with respect to AbbVie Inc. ("AbbVie") all of the entities listed in Exhibit J-1; (2) when used with respect to Allergan all of the entities listed in Exhibit J-2; and (3) additionally shall include other entities owned now or in the past either wholly or partially and either directly or indirectly by either AbbVie or Allergan and/or each of their respective past parents, but only to the extent those other entities played any role relating to Covered Conduct and/or Released Claims during the period when they were owned

either wholly or partially and either directly or indirectly by either AbbVie or Allergan and/or each of their respective past parents.

4. "*Agreement*" means this Allergan Public Global Opioid Settlement Agreement, inclusive of all exhibits.

5. "*Alleged Harms*" means the alleged past, present, and future financial or societal and related expenditures arising out of the alleged misuse and abuse of opioid products, non-exclusive examples of which are described in the documents listed on Exhibit A, that have allegedly arisen as a result of the physical and bodily injuries sustained by individuals suffering from opioid-related addiction, abuse, death, and other related diseases and disorders, and that have allegedly been caused by Allergan.

6. "*Allergan*" means Allergan Finance, LLC (f/k/a Actavis, Inc., which, in turn, was f/k/a/ Watson Pharmaceuticals, Inc.) and Allergan Limited (f/k/a Allergan plc, which, in turn, was f/k/a Actavis plc). *Allergan* does not include Teva Pharmaceuticals Industries Ltd. ("*Teva Ltd.*"), Teva Pharmaceuticals USA, Inc. ("*Teva USA*"), Cephalon, Inc. ("*Cephalon*"), Actavis LLC (f/k/a Actavis Inc.) ("*Actavis LLC*"), Watson Laboratories, Inc. ("*Watson*"), Actavis Pharma, Inc. (f/k/a Watson Pharma, Inc.) ("*Actavis Pharma*"), Actavis Elizabeth LLC ("*Actavis Elizabeth*"), Actavis Kadian LLC ("*Actavis Kadian*"), Actavis Laboratories FL, Inc. (f/k/a Watson Laboratories, Inc. - Florida) ("*Actavis Labs FL*"), Actavis Laboratories UT, Inc. (f/k/a Watson Laboratories, Inc. - Utah) ("*Actavis Labs UT*"), Actavis Mid Atlantic LLC ("*Actavis Mid*"), Actavis South Atlantic LLC ("*Actavis South*"), Actavis Totowa LLC ("*Actavis Totowa*"), or Anda, Inc. ("*Anda*").

7. "*Allocation Statute*" means a state law that governs allocation, distribution, and/or use of some or all of the Settlement Fund amounts allocated to that State and/or its Subdivisions and/or its Special Districts. In addition to modifying the allocation, as set forth in subsection VIII.E.2, an Allocation Statute may, without limitation, contain a Statutory Trust, further restrict expenditure of funds, form an advisory committee, establish oversight and reporting requirements, or address other default provisions and other matters related to the funds. An Allocation Statute is not required to address all three (3) types of funds comprising the Settlement Fund or all default provisions.

8. "*Annual Payment*" means the total amount of the Net Abatement Amount payable into the Settlement Fund by Allergan on each Payment Date (including the Initial Year Payment), as calculated by the Settlement Fund Administrator pursuant to Section VII or agreed to pursuant to Section VII.B.6, which shall not exceed the maximum payment for any given year as set forth in Exhibit M. This term does not include the Additional Restitution Amount or amounts paid pursuant to Section XIII.

9. "*Appropriate Official*" means the official defined in subsection XVI.F.4.

10. "*Attorney Fee and Cost Payment*" means the total amount of the Global Settlement Attorney Fee Amount payable by Allergan on the Payment Date of each year into the (1) Attorney Fee and Cost Fund described in Exhibit R, (2) the State Cost Fund described in Exhibit T, and (3) the State Outside Counsel Fee Fund described in Exhibit S, for attorneys' fees, expenses, and costs of the Settling States and Participating Subdivisions.

11. "*Attorney Fee and Cost Fund*" means an account consisting of $187,115,422.10 to pay attorneys' fees and costs of Litigating Subdivisions that become Participating Subdivisions and the MDL Expense Fund, amounts pursuant to the agreement on attorneys' fees and costs attached as Exhibit R.

12. "*Bar*" means either (1) a ruling by the highest court of the State, or the intermediate court of appeals when not subject to further review by the highest court of the State in a State with a single intermediate court of appeals, setting forth the general principle that no Subdivisions or Special Districts in the State may maintain Released Claims against Released Entities, whether on the ground of the Agreement (or the release in it) or otherwise; (2) a law barring Subdivisions and Special Districts in the State from maintaining or asserting Released Claims against Released Entities (either through a direct bar or through a grant of authority to release claims and that authority is exercised in full); or (3) a Settlement Class Resolution in the State with full force and effect. For the avoidance of doubt, a law or ruling that is conditioned or predicated upon payment by a Released Entity (apart from payments by Allergan incurred under the Agreement) shall not constitute a Bar.

13. "*Base Payment*" means the payments made pursuant to Section VII.D.

14. "*Case-Specific Resolution*" means either (1) a law barring specified Subdivisions or Special Districts from maintaining Released Claims against Released Entities (either through a direct Bar or through a grant of authority to release claims and that authority is exercised in full) or (2) a ruling by a court of competent jurisdiction over a particular Subdivision or Special District that has the legal effect of barring the Subdivision or Special District from maintaining any Released Claims at issue against Released Entities, whether on the ground of the Agreement (or the release in it) or otherwise. For the avoidance of doubt, a law, ruling, or release that is conditioned or predicated upon a post-Effective Date payment by a Released Entity (apart from payments by Allergan incurred under the Agreement or injunctive relief obligations incurred by it) shall not constitute a Case-Specific Resolution.

15. "*Claim*" means any past, present or future cause of action, claim for relief, cross-claim or counterclaim, theory of liability, demand, derivative, claim, request, assessment, charge, covenant, damage, debt, lien, loss, fine, penalty, restitution, reimbursement, disgorgement, expenses, judgment, right, obligation, dispute, suit, contract, controversy, agreement, parens patriae claim, promise, performance, warranty, omission, or grievance of any nature whatsoever, whether legal, equitable, statutory, regulatory or administrative, whether arising under federal,

state or local common law, statute, regulation, guidance, ordinance or principles of equity, whether filed or unfiled, whether asserted or unasserted, whether known or unknown, whether accrued or unaccrued, whether foreseen, unforeseen or unforeseeable, whether discovered or undiscovered, whether suspected or unsuspected, whether fixed or contingent, and whether existing or hereafter arising, in all such cases, including but not limited to any request for declaratory, injunctive, or equitable relief, compensatory, punitive, or statutory damages, absolute liability, strict liability, restitution, subrogation, contribution, indemnity, apportionment, disgorgement, reimbursement, attorney fees, expert fees, consultant fees, fines, penalties, expenses, costs or any other legal, equitable, civil, administrative, or regulatory remedy whatsoever. Claim does not include any individuals' personal injury or wrongful death cause of action.

16. "*Claim Over*" means a Claim asserted by a Non-Released Entity against a Released Entity on the basis of contribution, indemnity, or other claim over on any theory relating to a Non-Party Covered Conduct Claim asserted by a Releasor.

17. "*Compensatory Restitution Amount*" means the aggregate amount of payments by Allergan hereunder other than amounts paid as attorneys' fees and costs or identified pursuant to subsection VIII.C as being used to pay attorneys' fees and investigation costs or litigation costs.

18. "*Consent Judgment*" means a state-specific consent judgment, the general terms of which shall be agreed by the Settling States and Allergan prior to the Reference Date and shall include (1) approval of this Agreement and (2) the release set forth in Section V, including the full and final resolution of any Released Claims that the Settling State has brought against Released Entities.

19. "*Court*" means the respective court for each Settling State to which the Agreement and the Consent Judgment are presented for approval and/or entry as to that Settling State, or the Northern District of Ohio for purposes of administering the Attorney Fee and Cost Fund and any related fee and cost agreements.

20. "*Covered Conduct*" means any actual or alleged act, failure to act, negligence, statement, error, omission, breach of any duty, conduct, event, transaction, agreement, service, work, misstatement, misleading statement, or other activity of any kind whatsoever from the beginning of time through the Reference Date of this Agreement (and any past, present, or future consequence of any such act, failure to act, negligence, statement, error, omission, breach of duty, conduct, event, transaction, agreement, service, work, misstatement, misleading statement, or other activity) arising from or relating in any way to (a) the availability, discovery, research, development, manufacture, packaging, repackaging, marketing, promotion, advertising, labeling, relabeling, recall, withdrawal, distribution, delivery, monitoring, reporting, supply, sale, prescribing, dispensing, physical security, warehousing, use or abuse of, or operating procedures relating to, any Product, or any system, plan, policy, procedure, or advocacy relating to any Product or class of Products, including, but not limited to, any unbranded or branded

promotion, marketing, or advertising, unbranded information, patient support or assistance, educational programs, consultancy, research, or other programs, campaigns, lobbying, or grants, sponsorships, charitable donations, or other funding relating to any Product or class of Products; (b) the characteristics, properties, risks, or benefits of any Product or class of Products; (c) the monitoring, reporting, disclosure, non-monitoring, non-reporting, or non-disclosure to federal, state, or other regulators of orders for any Product or class of Products; (d) the selective breeding, harvesting, extracting, purifying, exporting, importing, applying for quota for, procuring quota for, handling, promoting, manufacturing, processing, packaging, supplying, distributing, converting, or selling of, or otherwise engaging in any activity relating to, a precursor or component of Product, including but not limited to natural, synthetic, semi-synthetic, or chemical raw materials, starting materials, finished active pharmaceutical ingredients, drug substances, or any related intermediate of Product; and/or (e) diversion control programs or suspicious order monitoring related to any Product. The foregoing is not intended to apply to claims alleging contamination of products.

21. "*Covered Special Districts*" means a Special District that is (1) a school district with K-12 student enrollment of at least 25,000 or 0.12% of a State's population, whichever is greater; (2) a fire district that covers a population of 25,000, or 0.20% of a State's population if a State's population is greater than 18 million (though, if a fire district's population is not easily calculable from state data sources and agreed to between the State and Allergan, it is calculated by dividing the population of the county or counties a fire district serves by the number of fire districts in the county or counties); or (3) a healthcare district or hospital district with at least 125 hospital beds in one or more hospitals rendering services in that district.

22. "*Designated State*" means Illinois.

23. "*Divested Actavis Generic Entity(ies)*" means Actavis LLC, Watson, Actavis Pharma, Actavis Elizabeth, Actavis Kadian, Actavis Labs FL, Actavis Labs UT, Actavis Mid, Actavis South, and Actavis Totowa.

24. "*Divested Entity(ies)*" means those companies listed on Exhibit J-3, which includes the Divested Actavis Generic Entities.

25. "*Effective Date*" means the date sixty (60) days after the Reference Date.

26. "*Eligible State*" means a State that is not a Prior Settling State and is thus eligible to participate in this Agreement and become a Settling State.

27. "*Enforcement Committee*" means a committee consisting of representatives of the Settling States and of the Participating Subdivisions. Exhibit B contains the organizational bylaws of the Enforcement Committee. Notice pursuant to subsection XVI.P shall be provided when there are changes in membership or contact information.

28. "*Exhibit G Participant"* means a Participating Subdivision or Participating Special District that appears in Exhibit G at the relevant point in time. Nothing about the use of the term Exhibit G Participant changes the ability to amend the list of entities listed on Exhibit G pursuant to this Agreement.

29. "*Global Settlement Abatement Amount*" means the total abatement amount of $2,149,873,027.00. (This figure does not reflect the application of the Prior Settlements Credit or potential offsets. It also does not include amounts paid to the Additional Restitution Amount, which may be used for abatement.)

30. "*Global Settlement Amount*" means $2,372,972,184.12 and consists of the Global Settlement Abatement Amount, the Global Settlement Attorney Fee Amount, and the Additional Restitution Amount.

31. "*Global Settlement Attorney Fee Amount*" means $206,906,476.36, which consists of the Attorney Fee and Cost Fund, the State Outside Counsel Fee Fund, and the State Cost Fund.

32. "*Implementation Administrator*" means the vendor agreed to by the Parties and retained by Teva and Allergan to provide notice pursuant to Section X.A and to manage the initial joinder period for Subdivisions and Special Districts, including the issuance and receipt of Settlement Participation Forms.

33. "*Implementation Costs*" means the costs for the Implementation Administrator, which shall be paid for pursuant to subsection VI.D.

34. "*Incentive A*" means the incentive payment described in subsection VII.E.5.

35. "*Incentive B*" means the incentive payment described in subsection VII.E.6.

36. "*Incentive C*" means the incentive payment described in subsection VII.E.7.

37. "*Incentive D*" means the incentive payment described in subsection VII.E.8.

38. "*Incentive Payment*" means the payments made pursuant to Section VII.E.

39. "*Initial Participating Special District*" means a Special District that meets the requirements set forth in subsection IX.L.

40. "*Initial Participating Subdivision*" means a Subdivision that meets the requirements set forth in subsection IX.D.

41. "*Initial Participation Date*" means the date ninety (90) days after the Preliminary Agreement Date, unless it is extended by written agreement of Allergan and the Enforcement Committee.

42. "*Initial Year Payment*" means the first Annual Payment of the Net Abatement Amount payable into the Settlement Fund by Allergan on the Payment Date as

calculated by the Settlement Fund Administrator pursuant to Section VII or agreed to pursuant to Section VII.B.6, which shall not exceed the maximum payment for the Initial Year Payment as set forth in Exhibit M.

43. "*Injunctive Relief Terms*" means the terms described in Section IV and set forth in Exhibit P.

44. "*Later Litigating Special District*" means a Special District (or Special District official asserting the right of or for the Special District to recover for Alleged Harms to the Special District and/or the people thereof) that is not a Litigating Special District and that files a lawsuit bringing a Released Claim against a Released Entity, or that adds such a Claim to a pre-existing lawsuit, after the Preliminary Agreement Date. It may also include a Litigating Special District whose Claims were resolved by a Bar or Case-Specific Resolution, which is later revoked following the execution date of this Agreement, when such Litigating Special District takes any affirmative step in its lawsuit other than seeking a stay, removal or dismissal with prejudice.

45. "*Later Litigating Subdivision*" means a Subdivision (or Subdivision official asserting the right of or for the Subdivision to recover for Alleged Harms to the Subdivision and/or the people thereof) that is not a Litigating Subdivision and that files a lawsuit bringing a Released Claim against a Released Entity, or that adds such a Claim to a pre-existing lawsuit, after the Preliminary Agreement Date. It may also include a Litigating Subdivision whose Claims were resolved by a Bar or Case-Specific Resolution, which is later revoked following the execution date of this Agreement, when such Litigating Subdivision takes any affirmative step in its lawsuit other than seeking a stay, removal, or dismissal with prejudice.

46. "*Later Participating Special District*" means a Participating Special District that meets the requirements of subsection IX.M but is not an Initial Participating Special District.

47. "*Later Participating Subdivision*" means a Participating Subdivision that meets the requirements of subsection IX.E but is not an Initial Participating Subdivision.

48. "*Litigating Special District*" means a Special District (or Special District official asserting the right of or for the Special District to recover for Alleged Harms to the Special District and/or the people thereof) that brought any Released Claims against any Released Entities on or before the Preliminary Agreement Date that were not separately resolved prior to that date. Exhibit C includes an agreed list of the Litigating Special Districts. Exhibit C will be updated (including with any corrections) periodically, and a final version of Exhibit C will be attached hereto as of the Effective Date.

49. "*Litigating Subdivision*" means a Subdivision (or Subdivision official asserting the right of or for the Subdivision to recover for Alleged Harms to the Subdivision and/or the people thereof) that brought any Released Claims against any Released

Entities on or before the Preliminary Agreement Date that were not separately resolved prior to that date. A Prior Settling Subdivision shall not be considered a Litigating Subdivision. Exhibit C includes an agreed list of the Litigating Subdivisions. Exhibit C will be updated (including with any corrections) periodically, and a final version of Exhibit C will be attached hereto as of the Effective Date.

50. "*National Arbitration Panel*" means the panel described in subsection XIV.G.4.

51. "*National Disputes*" means the disputes described in subsection XIV.G.

52. "*Net Abatement Amount*" means $1,799,186,751.00, which is the Global Settlement Abatement Amount adjusted for the Prior Settlements Credit pursuant to subsection VI.C.2.

53. "*Non-Litigating Covered Special District*" means a Covered Special District that is not a Litigating Special District.

54. "*Non-Litigating Special District"* means a Special District that is neither a Litigating Special District nor a Later Litigating Special District.

55. "*Non-Litigating Subdivision*" means a Subdivision that is not (1) a Litigating Subdivision, (2) a Later Litigating Subdivision, or (3) a Prior Settling Subdivision.

56. "*Non-Participating Special District*" means a Special District that is not a Participating Special District.

57. "*Non-Participating Subdivision*" means a Subdivision that is not a Participating Subdivision. For the avoidance of doubt, Non-Participating Subdivision also includes Prior Settling Subdivisions.

58. "*Non-Party Covered Conduct Claim*" means a Claim against any Non-Released Entity involving, arising out of, or related to Covered Conduct (or conduct that would be Covered Conduct if engaged in by a Released Entity).

59. "*Non-Party Settlement*" means a settlement by any Releasor that settles any Non-Party Covered Conduct Claim and includes a release of any Non-Released Entity.

60. "*Non-Released Entity*" means an entity that is not a Released Entity.

61. "*Non-Settling State*" means a State that is an Eligible State but not a Settling State.

62. "*Opioid Remediation*" means care, treatment, and other programs and expenditures (including reimbursement for past such programs or expenditures except where this Agreement restricts the use of funds solely to future Opioid Remediation) designed to (1) address the misuse and abuse of opioid products, (2) treat or mitigate opioid use or related disorders, or (3) mitigate other alleged effects of the opioid abuse crisis, including on those injured as a result of the opioid abuse crisis. Exhibit E

provides a non-exhaustive list of expenditures that qualify as being paid for Opioid Remediation. Qualifying expenditures may include reasonable related administrative expenses.

63. "*Participating Special District*" means a Special District that signs the Settlement Participation Form annexed hereto as Exhibit K and meets the requirements for becoming a Participating Special District under Section IX. Participating Special Districts include both Initial Participating Special Districts and Later Participating Special Districts.

64. "*Participating Subdivision*" means a Subdivision that signs a Settlement Participation Form annexed hereto as Exhibit K and meets requirements for becoming a Participating Subdivision under Section IX. Participating Subdivisions include both Initial Participating Subdivisions and Later Participating Subdivisions.

65. "*Parties*" means Allergan and the Settling States (each, a "*Party*").

66. "*Payment Date*" means the date on which Allergan makes its Annual Payments (including its Initial Year Payment), Additional Restitution Payments, and Attorney Fee and Cost Payments, pursuant to Section VII and XIII and Exhibits M-1 and M-2. The first Payment Date is thirty (30) days after the Effective Date. The second Payment Date is July 15, 2024, the third Payment Date is July 15, 2025, the fourth Payment Date is July 15, 2026, the fifth Payment Date is July 15, 2027, the sixth Payment Date is July 15, 2028, and the seventh Payment Date is July 15, 2029.

67. "*Payment Year*" means the calendar year during which the applicable Annual Payment is due pursuant to subsection VII.B. Payment Year 1 is 2023, Payment Year 2 is 2024, and so forth. References to payment "for a Payment Year" mean the Annual Payment due that year. References to eligibility "for a Payment Year" mean eligibility in connection with the Annual Payment due during that year.

68. "*Preliminary Agreement Date*" means the date on which Allergan gives notice to the Settling States and MDL Plaintiffs' Executive Committee of its determination that a sufficient number of States have agreed to be Settling States to proceed with notice pursuant to Section IX.A. This date shall be no more than fourteen (14) days after the end of the notice period to States (as set forth in Section II.A) unless it is extended by written agreement of Allergan and the Enforcement Committee.

69. "*Primary Subdivision*" means a Subdivision that has a population of 30,000 or more. A list of Primary Subdivisions in each State is provided in Exhibit I, and such list shall be updated if any Primary Subdivision is inadvertently missed or included.

70. *"Prior Settlements Credit"* means the credit of $350,686,276.00, reflecting that the allocations for Prior Settling States and Prior Settling Subdivisions for Claims related to the Covered Conduct against Allergan and/or other Released Entities were or will be separately settled. The credit is applied pursuant to subsection VI.A.1.

71. *"Prior Settling State(s)"* means Florida, Louisiana, New York, Rhode Island, and West Virginia and all Subdivisions and Special Districts within those States whose Claims were released as part of those States' settlements.

72. *"Prior Settling Subdivision(s)"* means the City and County of San Francisco, California, Cuyahoga County, Ohio, and Summit County, Ohio.

73. "*Product*" means any chemical substance, whether used for medicinal or non-medicinal purposes, and whether natural, synthetic, or semi-synthetic, or any finished pharmaceutical product made from or with such substance, that is an opioid or opiate, as well as any product containing any such substance. It also includes: 1) the following when used in combination with opioids or opiates: benzodiazepine, carisoprodol, zolpidem, gabapentin, diazepam, estazolam, quazepam, alprazolam, clonazepam, oxazepam, flurazepam, triozolam, temazepam, midazolam; and 2) a combination or "cocktail" of any stimulant or other chemical substance prescribed, sold, bought, or dispensed to be used together that includes opioids or opiates. For the avoidance of doubt, "*Product*" does not include benzodiazepine, carisoprodol, zolpidem, or gabapentin when not used in combination with opioids or opiates. "*Product*" includes but is not limited to any substance consisting of or containing buprenorphine, codeine, fentanyl, hydrocodone, hydromorphone, meperidine, methadone, morphine, naloxone, naltrexone, oxycodone, oxymorphone, pentazocine, propoxyphene, tapentadol, tramadol, opium, heroin, carfentanil, any variant of these substances, or any similar substance. "*Product*" also includes any natural, synthetic, semi-synthetic or chemical raw materials, starting materials, finished active pharmaceutical ingredients, drug substances, and any related intermediate products used or created in the manufacturing process for any of the substances described in the preceding sentence. Further, "Product(s)" includes, but is not limited to, the following: (a) Anexsia, Bancap HC, Combunox, Dilaudid, Dilaudid HP, Duradyne, Esgic with Codeine, Fiorinal with Codeine, Fioricet with Codeine, Kadian, Lorcet, Lorcet Plus, Maxidone, MoxDuo, Norco, Procet, Reprexain, Vicodin, Vicodin ES, Vicodin HP, and Vicoprofen, and any type, version, strength, or dosage of the foregoing; and (b) Aspirin + butalbital + caffeine + codeine phosphate, Fentanyl citrate injection, Fentanyl citrate tablet, Fentanyl transdermal, Homatropine methylbromide + hydrocodone bitartrate, Hydrocodone + acetaminophen, Hydrocodone + ibuprofen, Hydromorphone tablet, Meperidine hydrochloride injection, Meperidine hydrochloride tablet, Morphine sulfate capsule, Morphine sulfate injection, Morphine sulfate tablet, Oxycodone, Oxycodone + acetaminophen, Oxycodone + aspirin, Oxycodone + hydrochloride, Oxycodone + ibuprofen, Oxymorphone tablet, Tramadol hydrocholoride, and any type, version, strength, or dosage of the foregoing.

74. "*Reference Date*" means the date on which Allergan is to inform the Settling States and MDL Plaintiffs' Executive Committee of its determination whether there is sufficient resolution of Claims and potential Claims at the Subdivision level to go forward with the settlement. The Reference Date shall be no later than thirty (30) days after the Initial Participation Date, unless it is extended by written agreement of Allergan and the Enforcement Committee.

75. "*Released Claims*" means any and all Claims that directly or indirectly are based on, arise out of, or in any way relate to or concern the Covered Conduct occurring prior to the Reference Date. Without limiting the foregoing, "Released Claims" include any Claims that have been asserted against the Released Entities by any Settling State or any of its Litigating Subdivisions or Litigating Special Districts in any federal, state, or local action or proceeding (whether judicial, arbitral, or administrative) based on, relating to, in whole or in part, the Covered Conduct, or any such Claims that could be or could have been asserted now or in the future in those actions or in any comparable action or proceeding brought by a State or any of its Subdivisions or Special Districts or any Releasors (whether or not such State, Subdivision, Special District, or Releasor has brought such action or proceeding). Released Claims also include all Claims against Released Entities asserted in any proceeding to be dismissed pursuant to the Agreement, whether or not such claims relate to Covered Conduct. "Released Claims" shall be interpreted broadly. This Agreement does not release Claims by private individuals. Claims by private individuals shall be treated in accordance with applicable law. Released Claims is also used herein to describe Claims brought by a Later Litigating Subdivision, Later Litigating Special District, or other non-party Subdivision or Special District that would have been Released Claims if they had been brought by a Releasor against a Released Entity before the Effective Date.

76. "*Released Entities*" means Allergan and (1) all of Allergan's past and present direct or indirect parents, subsidiaries, divisions, joint ventures, predecessors, successors, affiliates, business units, assigns, agents (all of the foregoing solely in their capacity as such with respect to the Released Claims), and insurers (solely in their role as insurers, if any, with respect to the Released Claims), including, but not limited to, (a) AbbVie and (b) Divested Actavis Generic Entities and other Divested Entities (and their respective past and current parents, subsidiaries, and affiliates, including but not limited to Teva Ltd., Teva USA, and their subsidiaries and affiliates) but solely as to the branded opioid drugs that are Products distributed and/or sold before August 2, 2016 by Divested Actavis Generic Entities and other Divested Entities and the operation of the Divested Actavis Generic Entities and other Divested Entities related to those branded opioid drugs that are Products before August 2, 2016; (2) any person or entity to the extent, and only to the extent, that such person or entity may have a Claim based on such person or entity having a business relationship with Allergan or AbbVie and/or any of Allergan or AbbVie's Affiliated Companies, including, but not limited to, for contractual indemnity, equitable or implied indemnity, contribution, comparative fault, reimbursement, or apportionment (including, but not limited to, the respective past and present direct or indirect parents, subsidiaries, divisions, joint ventures, predecessors, successors, affiliates, business units, assigns, partners, manufacturers, contractors, agents, and insurers (all of the foregoing solely in their capacity as such with respect to the Released Claims) of any of the foregoing in (1), including Abbott Laboratories and Abbott Laboratories Inc. ("Abbott"), provided that, for avoidance of doubt, Abbott is not a Released Entity for purposes of Claims related to OxyContin, Purdue Pharma, or Purdue Pharma Inc.; and (ii) Halo Pharmaceuticals, Inc., Shionogi Inc., Mikart, LLC, PDI, Inc., TMS Health, LLC, National Health Information Network,

Inc., Ventiv Commercial Services, LLC, inVentiv Commercial Services, LLC, UPS Supply Chain Solutions, Inc., and King Pharmaceuticals, Inc., and their respective past and current parents, subsidiaries, and affiliates) against Allergan or AbbVie and/or any of Allergan or AbbVie's Affiliated Companies relating to any Covered Conduct, Products, class of Products, and/or Released Claims arising from such business relationship; and (3) the respective past and present employees, officers, directors, members, shareholders, partners, trustees, contractors, consultants, and agents (all of the foregoing solely in their capacity as such with respect to the Released Claims) of any of the foregoing in (1) and (2). Notwithstanding the foregoing (and subject to certain provisions, including, but not limited to, the Non-Party Settlement at Section V.B.2 and the Set-Off at Section XV below), Released Entities shall exclude Divested Actavis Generic Entities and other Divested Entities (and their respective past and current parents, subsidiaries, and affiliates, including but not limited to Teva Ltd., Teva USA, and their subsidiaries and affiliates, but not Allergan and other Released Entities), but solely as to: (i) their generic opioid drugs that are Products, and/or (ii) the operation of Divested Actavis Generic Entities and other Divested Entities related to those generic opioid drugs that are Products for which Releasors have also sought to hold Allergan (and/or other Released Entities) liable. For the avoidance of doubt, any entity acquired, or joint venture entered into by Allergan after the Reference date is not a Released Entity.

77. "*Releasors*" means (1) each Settling State; (2) each Participating Subdivision; (3) each Participating Special District; and (4) without limitation and to the maximum extent of the power of each Settling State's Attorney General and/or Participating Subdivision and Participating Special District to release Claims, (a) the Settling State's, Participating Subdivision's, and Participating Special District's departments, agencies, divisions, boards, commissions, Subdivisions, districts, instrumentalities of any kind and attorneys, including its Attorney General, and any person in their official capacity whether elected or appointed to serve any of the foregoing and any agency, person, or other entity claiming by or through any of the foregoing, (b) any public entities, public instrumentalities, public educational institutions, unincorporated districts, fire districts, irrigation districts, water districts, emergency services districts, school districts, healthcare districts, hospital districts, Sheriffs and law enforcement districts, library districts, coroner's offices, and public transportation authorities, and other Special Districts in a Settling State, including those with the regulatory authority to enforce state and federal controlled substances acts or the authority to bring Claims related to Covered Conduct seeking money (including abatement (or remediation and/or restitution)) or revoke a pharmaceutical distribution license, and (c) any person or entity acting in a parens patriae, sovereign, quasi-sovereign, private attorney general, qui tam, taxpayer, or other capacity seeking relief, including but not limited to, fines, penalties, or punitive damages, on behalf of or generally applicable to the general public with respect to a Settling State or a Subdivision or Special District in a Settling State, whether or not any of them participate in the Agreement. "Releasors" does not include persons acting in an individual capacity, regardless of the type of relief sought. In addition to being a Releasor as provided herein, Participating Subdivisions and Participating Special Districts shall also provide a Settlement

Participation Form, which is attached as Exhibit K. Each Settling State's Attorney General represents that he or she has or has obtained (or will obtain no later than the Effective Date) the authority set forth in the Representation and Warranty subsection of Section V.

78. "*Revocation Event*" means with respect to a Bar, Settlement Class Resolution, or Case-Specific Resolution, a legislative amendment or a revocation, rescission, reversal, overruling, or interpretation that in any way limits the effect of such Bar, Settlement Class Resolution, or Case-Specific Resolution on Released Claims or any other action or event that otherwise deprives the Bar, Settlement Class Resolution or Case-Specific Resolution of force or effect in any material respect.

79. "*Settlement Class Resolution*" means a class action resolution in a court of competent jurisdiction in a Settling State with respect to a class of Subdivisions and Special Districts in that State that (1) conforms with that Settling State's statutes, case law, and/or rules of procedure regarding class actions; (2) is approved and entered as an order of a court of competent jurisdiction in that State and has become final as defined in "State-Specific Finality"; (3) is binding on all Non-Participating Subdivisions and Non-Participating Special Districts in that State (other than opt outs as permitted under the next sentence); (4) provides that all such Non-Participating Subdivisions or Non-Participating Special Districts may not bring Released Claims against Released Entities, whether on the ground of the Agreement (or the releases herein) or otherwise; and (5) does not impose any costs or obligations on Allergan other than those provided for in the Agreement, or contain any provision inconsistent with any provision of the Agreement. If applicable state law requires that opt-out rights be afforded to members of the class, a class action resolution otherwise meeting the foregoing requirements shall qualify as a Settlement Class Resolution unless Subdivisions collectively representing more than 1% of the total population of all of that State's Subdivisions listed in Exhibit G opt out. In seeking certification of any Settlement Class, the applicable State and Participating Subdivisions shall make clear that certification is sought solely for settlement purposes and shall have no applicability beyond approval of the settlement for which certification is sought. Nothing in this Agreement constitutes an admission by any Party that class certification would be appropriate for litigation purposes in any case.

80. "*Settlement Fund*" means the interest-bearing fund established under the Agreement into which Annual Payments by Allergan are made pursuant to subsection VII. The Settlement Fund comprises the Abatement Accounts Fund, State Fund, and Subdivision Fund.

81. "*Settlement Fund Administrator*" means the entity that determines the Annual Payments (including calculating Incentive Payments pursuant to Section VII and any amounts subject to offset pursuant to Sections VII.C and XI), and administers and distributes amounts into the Settlement Fund. It shall also administer and distribute the Additional Restitution Amount pursuant to Section XII. The duties of the Settlement Fund Administrator shall be governed by this Agreement. Prior to

the Initial Participation Date, the Parties shall agree to selection and removal processes for and a detailed description of the Settlement Fund Administrator's duties all of which shall be appended to the Agreement as Exhibit L.

82. "*Settlement Fund Administrator Costs*" means any costs and fees associated with or arising out of the duties of the Settlement Fund Administrator with regard to Teva and Allergan's payments to the Settlement Fund as described in Exhibit L and elsewhere in this Agreement, including those arising from the use of a bank or other financial institution to receive and disburse payments.

83. "*Settlement Fund Escrow*" means the interest-bearing escrow fund established pursuant to this Agreement to hold disputed payments made under this Agreement.

84. "*Settlement Participation Form*" means the form attached as Exhibit K that Participating Subdivisions and Participating Special Districts must execute and provide to Allergan and the Implementation Administrator or Settlement Fund Administrator, and which shall (1) make such Participating Subdivisions and Participating Special Districts signatories to this Agreement, (2) include a full and complete release of any and all of such Participating Subdivisions' and Participating Special Districts' Claims and (3) require prompt cessation of litigation activity as set forth in Section III, and request for dismissal with prejudice of any Released Claims that have been filed against Released Entities by any such Participating Subdivisions or Participating Special Districts within fourteen (14) business days after the Reference Date.

85. "*Settlement Payment Schedule*" means the schedule of payments attached to this Agreement as Exhibit M. Actual payment amounts are subject to adjustments consistent with this Agreement.

86. "*Settling State*" means any Eligible State that has entered into this Agreement.

87. "*Special District*" means (1) formal and legally recognized sub-entities of a State recognized by the U.S. Census Bureau[1] and those listed on Exhibit C; and (2) any person, official, or entity thereof acting in an official capacity on behalf of the Special District. Special Districts do not include sub-entities of a State that provide general governance for a defined area that would qualify as a Subdivision. Entities that include any of the following words or phrases in its name shall not be considered a Special District: mosquito, pest, insect, spray, vector, animal, air quality, air pollution, clean air, coastal water, tuberculosis, and sanitary.

88. "*State*" means any state of the United States of America, the District of Columbia, American Samoa, Guam, the Northern Mariana Islands, Puerto Rico, and the U.S. Virgin Islands. Additionally, the use of non-capitalized "state" to describe

[1] All such entities are found on the "Special District," "School District," and "DEP School District" tabs of the Census Bureau's 2017 Government Units Listing spreadsheet available at https://www2.census.gov/programs-surveys/gus/datasets/2017/govt_units_2017.ZIP.

something (e.g., "state court") shall also be read to include parallel entities in commonwealths, territories, and the District of Columbia (e.g., "territorial court").

89. "*State Allocation Percentage*" means the allocation percentages for Eligible States as set forth in Exhibit F-2, which have been adjusted from the State Global Allocation Percentages to account for the Prior Settlements Credit.

90. "*State Cost Fund*" means the fund totaling $3,598,373.50 and described in Exhibit T.

91. "*State Global Allocation Percentage*" means the allocation percentages for all States as set forth in Exhibit F-1, which represents allocations before the Prior Settlements Credit is applied.

92. "*State Fund*" means a component of the Settlement Fund described in subsection VIII.D.

93. "*State Outside Counsel Fee Fund*" means the fund totaling $16,192,680.76 described in Exhibit S.

94. "*State-Specific Finality*" means, with respect to the Settling State in question:

a. the Agreement and the Consent Judgment have been approved and entered by the Court as to Allergan, including the release of all Released Claims against Released Entities as provided in this Agreement;

b. for all lawsuits brought by the Settling State against Released Entities for Released Claims, either previously filed or filed as part of the entry of the Consent Judgment, the Court has stated in the Consent Judgment or otherwise entered an order finding that all Released Claims against Released Entities asserted in the lawsuit have been resolved by agreement; and

c. (1) the time for appeal or to seek review of or permission to appeal from the approval and entry as described in subsection (a) hereof and entry of such order described in subsection (b) hereof has expired; or (2) in the event of an appeal, the appeal has been dismissed or denied, or the approval and entry described in (a) hereof and the order described in subsection (b) hereof have been affirmed in all material respects (to the extent challenged in the appeal) by the court of last resort to which such appeal has been taken and such dismissal or affirmance has become no longer subject to further appeal (including, without limitation, review by the United States Supreme Court).

95. "*State-Subdivision Agreement*" means an agreement that a Settling State reaches with the Subdivisions in that State regarding the allocation, distribution, and/or use of funds allocated to that State and to Exhibit G Participants in that State. A State-Subdivision Agreement shall be effective if approved pursuant to the provisions of Exhibit O or if adopted by statute. Preexisting agreements addressing funds other

than those allocated pursuant to this Agreement shall qualify if the approval requirements of Exhibit O are met. A State and its Subdivisions may revise, supplement, or refine a State-Subdivision Agreement if approved pursuant to the provisions of Exhibit O or if adopted by statute.

96. "*Statewide Payment Amount"* means the amount from an Annual Payment to be paid to a Settling State, its separate types of funds (if applicable), and its Exhibit G Participants.

97. "*Statutory Trust*" means a trust fund established by state law to receive funds allocated to a State's Abatement Accounts Fund and restrict their expenditure to Opioid Remediation purposes subject to reasonable administrative expenses. A State may give a Statutory Trust authority to allocate one or more of the three Settlement Funds, but this is not required.

98. "*Subdivision*" means (1) a formal and legally recognized sub-entity of a State that provide general governance for a defined area, such as a municipality, county, parish, city, town, incorporated township, village, borough, or any other entities that provide municipal-type government within a State, and (2) any person, official, or entity thereof acting in an official capacity on behalf of the Subdivision (including, without limitation, district attorneys, county attorneys, city attorneys, Sheriffs, and any other official, employee, or representative). Unless otherwise specified, "Subdivision" includes all functional counties and parishes and other functional levels of sub-entities of a State that provide general governance for a defined area. Historic, non-functioning sub-entities of a State (such as Connecticut counties) are not Subdivisions, unless the entity has filed a lawsuit that includes a Released Claim against a Released Entity in a direct, parens patriae, or any other capacity. For purposes of this Agreement, the term Subdivision does not include Special Districts.

99. "*Subdivision and Special District Allocation Percentage*" means for Subdivisions and Special Districts in a Settling State that are eligible to receive an allocation from the Subdivision Fund pursuant to subsection VIII.D or subsection VIII.E, the percentage as set forth in Exhibit G. The aggregate Subdivision and Special District Allocation Percentage of all Subdivisions and Special Districts receiving a Subdivision and Special District Allocation Percentage in each State shall equal 100%. Immediately upon the effectiveness of any State-Subdivision Agreement, Allocation Statute, Statutory Trust, or voluntary redistribution allowed by subsection VIII.E.3 (or upon the effectiveness of an amendment to any State-Subdivision Agreement, Allocation Statute, Statutory Trust, or voluntary redistribution allowed by subsection VIII.E.3) that addresses allocation from the Subdivision Fund, whether before or after the Initial Participation Date, Exhibit G will automatically be amended to reflect the allocation from the Subdivision Fund pursuant to the State-Subdivision Agreement, Allocation Statute, Statutory Trust, or voluntary redistribution allowed by Section VIII.E.3. The Subdivision and Special District Allocation Percentages contained in Exhibit G may not change once notice is distributed pursuant to subsection X.A, except upon the effectiveness

of any State-Subdivision Agreement, Allocation Statute, Statutory Trust, or voluntary redistribution allowed by subsection VIII.E.3 (or upon the effectiveness of an amendment to any State-Subdivision Agreement, Allocation Statute, Statutory Trust, or voluntary redistribution allowed by subsection VIII.E.3) that addresses allocation from the Subdivision Fund. For the avoidance of doubt, no Subdivision or Special District not listed on Exhibit G shall receive an allocation from the Subdivision Fund and no provision of this Agreement shall be interpreted to create such an entitlement.

100. "*Subdivision Fund*" means a component of the Settlement Fund described in subsection VIII.A.

101. "*Teva*" means (i) Teva Pharmaceutical Industries Ltd. and, (ii) all of its respective past and present direct or indirect parents, subsidiaries, divisions, affiliates, joint ventures, predecessors, successors, assigns, including but not limited to the Divested Actavis Generic Entities and Anda Inc.

102. "*Teva Global Opioid Settlement Agreement*" means the settlement agreement between and among the Settling States, Participating Subdivisions, Participating Special Districts, and Teva to resolve opioid-related Claims against Teva and the other Released Entities (as defined therein).

103. "*Threshold Motion*" means a motion to dismiss or equivalent dispositive motion made at the outset of litigation under applicable procedure. A Threshold Motion must include as potential grounds for dismissal, any applicable Bar or the relevant release by a Settling State, Participating Subdivision, or Participating Special District provided under this Agreement and, where appropriate under applicable law, any applicable limitations defense.

II. Participation by States and Condition to Preliminary Agreement

A. *Notice to States*. On November 22, 2022 this Agreement shall be distributed to all Eligible States. The Eligible States' Attorneys General shall then have a period of thirty (30) days to decide whether to become Settling States. Eligible States will decide whether to become Settling States for both this Agreement and the Teva Global Opioid Settlement Agreement, or decline participation in both settlements. However, if Teva enters bankruptcy prior to the Effective Date, Eligible States can choose to only join this Agreement. If a State is only an Eligible State with respect to one of the Agreements, the State need only decide whether to become a Settling State with respect to the Agreement for which it is an Eligible State. States that determine to become Settling States shall so notify the Enforcement Committee and Allergan within thirty (30) days after November 22, 2022 and shall further commit to obtaining any necessary additional State releases prior to the Effective Date. This notice

period for States may be extended by written agreement of Allergan and the Enforcement Committee.

B. *Ineligible States.* Non-Settling States and Prior Settling States shall not be eligible for any payments or have any rights in connection with this Agreement.

C. *Condition to Preliminary Agreement*. Following the notice period to Eligible States set forth in subsection II.A above, Allergan shall determine on or before the Preliminary Agreement Date whether, in its sole discretion enough States have agreed to become Settling States to proceed with notice to Subdivisions as set forth in Section X below. The determination to proceed shall be in the sole discretion of Allergan and may be based on any criteria or factors deemed relevant by Allergan. If Allergan determines that this condition has been satisfied, and that notice to the Subdivisions should proceed, it will so notify the Settling States by providing notice to the Enforcement Committee on the Preliminary Agreement Date. If Allergan determines that this condition has not been satisfied, it will so notify the Settling States by providing notice to the Enforcement Committee, and this Agreement will have no further effect and all releases and other commitments or obligations contained herein will be void, other than Allergan's funding of Implementation Costs to date. The Preliminary Agreement Date may be extended by written agreement of Allergan and the Enforcement Committee.

D. *Later Joinder by States*. After the Preliminary Agreement Date, an Eligible State may only become a Settling State with the consent of Allergan, in its sole discretion. If a State becomes a Settling State more than thirty (30) days after the Preliminary Agreement Date, the Subdivisions and Special Districts in that State that become Participating Subdivisions and Participating Special Districts within ninety (90) days of the State becoming a Settling State shall be considered Initial Participating Subdivisions or Initial Participating Special Districts.

III. Cessation of Litigation Activities

A. Following the Preliminary Agreement Date, if Allergan has determined to proceed with notice pursuant to Section II, all Litigating States that intend to become Settling States and that are engaged in or have engaged in discovery and/or substantive motion practice ("*Active Litigation*") against a Released Entity shall make reasonable efforts to immediately cease litigation activity (e.g., written and document discovery, depositions, expert disclosures, and motion practice) against Allergan where feasible, or to minimize litigation activity by means of agreed deadline extensions and agreed postponement of depositions, document productions, and motion practice. Allergan shall cooperate in such efforts. The obligations under this subsection do not extend past the Reference Date if Allergan determines it is not going forward with the Agreement. This paragraph III.A does not apply to Litigating States with a trial date within six (6) months of the Preliminary Agreement Date, though such Litigating States and Allergan shall engage in good faith discussions regarding the potential cessation of litigation activity.

B. Following the execution of the Settlement Participation Form, attached as Exhibit K, a Litigating Subdivision or Litigating Special District that is engaged in active litigation

against a Released Entity shall make all reasonable efforts to immediately cease all litigation activity (e.g., written and document discovery, depositions, expert disclosures, and motion practice) against Allergan, where feasible, or to minimize litigation activity by means of agreed deadline extensions and agreed postponement of litigation activity by means of agreed deadline extensions and agreed postponement of depositions, document productions, and motion practices. Allergan shall cooperate in such efforts. The obligations under this subsection do not extend past the Reference Date if Allergan determines it is not going forward with the settlement. This paragraph III.B does not apply to Litigating Subdivisions or Litigating Special Districts with a trial date within six (6) months of the Preliminary Agreement Date, though such Litigating Subdivisions or Litigating Special Districts and Allergan shall engage in good faith discussions regarding the potential cessation of litigation activity. Notwithstanding this provision no Litigating Subdivision is required to cease its litigation if it determines such action would be detrimental to its litigation.

C. Following the Reference Date, the Settling States shall endeavor to file Consent Judgments (the contents of which must be agreed upon with Allergan) within thirty (30) days of the Reference Date. Participating Subdivisions and Participating Special Districts, as applicable, shall request dismissal of their actions with prejudice within fourteen (14) days of the Reference Date. The Settling States, Participating Subdivisions, and Participating Special Districts shall use best efforts to get Consent Judgments or orders of dismissal with prejudice, as applicable, entered promptly after filing.

IV. Injunctive Relief

A. *Entry of Injunctive Relief*. As part of the Consent Judgment, the Parties agree to the Injunctive Relief Terms attached as Exhibit P.

V. Release

A. *Scope.* As of the Effective Date, the Released Entities will be released and forever discharged from all of the Releasors' Released Claims. Each Settling State (for itself and its Releasors) and Participating Subdivision (for itself and its Releasors), and Participating Special District (for itself and its Releasors) will, on or before the Effective Date, absolutely, unconditionally, and irrevocably covenant not to bring, file, or claim, or to cause, assist in bringing, or permit to be brought, filed, or claimed, or to otherwise seek to establish liability for any Released Claims against any Released Entity in any forum whatsoever. The releases provided for in the Agreement are intended to be broad and shall be interpreted so as to give the Released Entities the broadest possible bar against any liability relating in any way to Released Claims and extend to the full extent of the power of each Settling State, its Attorney General, each Participating Subdivision, and each Participating Special District to release Claims. The release shall be a complete bar to any Released Claim of all Releasors. Nothing in this Agreement shall release or impair any Claims against Teva Ltd., Teva USA, Cephalon, or Anda, except to the extent expressly set forth in this Agreement.

B. *Claim Over and Non-Party Settlement*.

1. *Statement of Intent.* It is the intent of the Parties that:

   a. Released Entities should not seek contribution or indemnification (other than pursuant to an insurance contract) from other parties for their payment obligations under this Agreement;

   b. the payments made under this Agreement shall be the sole payments made by the Released Entities to the Releasors involving, arising out of, or related to Covered Conduct (or conduct that would be Covered Conduct if engaged in by a Released Entity);

   c. Claims by Releasors against non-Parties should not result in additional payments by Released Entities, whether through contribution, indemnification or any other means; and

   d. the Settlement meets the requirements of the Uniform Contribution Among Joint Tortfeasors Act and any similar state law or doctrine that reduces or discharges a released party's liability to any other parties.

   e. The provisions of this subsection V.B are intended to be implemented consistent with these principles. This Agreement and the releases and dismissals provided for herein are made in good faith.

2. *Contribution/Indemnity Prohibited*. No Released Entity shall seek to recover for amounts paid under this Agreement based on indemnification, contribution, or any other theory from a manufacturer, pharmacy, hospital, pharmacy benefit manager, health insurer, third-party vendor, trade association, distributor, or health care practitioner, provided that a Released Entity shall be relieved of this prohibition with respect to any entity that asserts a Claim Over against it. However, and notwithstanding the foregoing, this provision shall not preclude any Released Entity from seeking indemnification, contribution, or any other theory from and against Teva Ltd., Divested Entities, Pfizer Inc., King Pharmaceuticals, Inc., and Alpharma Inc., and/or each of their respective past and current parents, subsidiaries, and/or affiliates. For the avoidance of doubt, nothing herein shall prohibit a Released Entity from recovering amounts owed pursuant to insurance contracts.

3. *Non-Party Settlement*. To the extent that, on or after the Reference Date, any Releasor enters into a Non-Party Settlement, including in any bankruptcy case or through any plan of reorganization (whether individually or as a class of creditors), the Releasor will include (or in the case of a Non-Party Settlement made in connection with a bankruptcy case, will cause the debtor to include), unless prohibited from doing so under applicable law, in the Non-Party Settlement a prohibition on contribution or indemnity of any kind substantially equivalent to that required from Allergan in subsection V.B.2, or a release from such Non-Released Entity in favor of the Released Entities (in a form equivalent to the releases

contained in this Agreement) of any Claim Over. The obligation to obtain the prohibition and/or release required by this subsection is a material term of this Agreement. The sole remedy for a Releasor's failure to include such a provision in a Non-Party Settlement shall be the application of Section V.B.4 below. Non-Released Entities include, but are not limited to, Teva Ltd., Teva USA, Divested Actavis Generic Entities or other Divested Entities, and Anda.

4. *Claim Over*. In the event that any Releasor obtains a judgment with respect to Non-Party Covered Conduct against a Non-Released Entity that does not contain a prohibition like that in subsection V.B.3, or any Releasor files a Non-Party Covered Conduct Claim against a Non-Released Entity in bankruptcy or a Releasor is prevented for any reason from obtaining a prohibition/release in a Non-Party Settlement as provided in subsection V.B.3, and such Non-Released Entity asserts a Claim Over against a Released Entity, then Releasor and Allergan shall take the following actions to ensure that the Released Entities do not pay more with respect to Covered Conduct to Releasors or to Non-Released Entities than the amounts owed under this Agreement by Allergan:

   a. Allergan shall notify that Releasor of the Claim Over within sixty (60) days of the assertion of the Claim Over or sixty (60) days of the Effective Date of this Agreement, whichever is later;

   b. Allergan and that Releasor shall meet and confer concerning the means to hold Released Entities harmless and ensure that it is not required to pay more with respect to Covered Conduct than the amounts owed by Allergan under this Agreement;

   c. That Releasor and Allergan shall take steps sufficient and permissible under the law of the State of the Releasor to hold Released Entities harmless from the Claim Over and ensure Released Entities are not required to pay more with respect to Covered Conduct than the amounts owed by Allergan under this Agreement. Such steps may include, where permissible:

      (i) Filing of motions to dismiss or such other appropriate motion by Allergan or Released Entities, and supported by Releasors, in response to any Claim filed in litigation or arbitration;

      (ii) Reduction of that Releasor's Claim and any judgment it has obtained or may obtain against such Non-Released Entity by whatever amount or percentage is necessary to extinguish such Claim Over under applicable law, up to the amount that Releasor has obtained, may obtain, or has authority to control from such Non-Released Entity;

      (iii) Placement into escrow of funds paid by the Non-Released Entities such that those funds are available to satisfy the Claim Over;

(iv) Return of monies paid by Allergan to that Releasor under this Agreement to permit satisfaction of a judgment against or settlement with the Non-Released Entity to satisfy the Claim Over;

(v) Payment of monies to Allergan by that Releasor to ensure it is held harmless from such Claim Over, up to the amount that Releasor has obtained, may obtain, or has authority to control from such Non-Released Entity;

(vi) Credit to Allergan under this Agreement to reduce the overall amounts to be paid under the Agreement such that it is held harmless from the Claim Over; and

(vii) Such other actions as that Releasor and Allergan may devise to hold Allergan harmless from the Claim Over.

d. The actions of that Releasor and Allergan taken pursuant to paragraph (c) must, in combination, ensure Allergan is not required to pay more with respect to Covered Conduct than the amounts owed by Allergan under this Agreement.

e. In the event of any dispute over the sufficiency of the actions taken pursuant to paragraph (c), that Releasor and Allergan may seek review by the National Arbitration Panel, provided that, if the Parties agree, such dispute may be heard by the state court where the relevant Consent Judgment was filed. The National Arbitration Panel shall have authority to require Releasors to implement a remedy that includes one or more of the actions specified in paragraph (c) sufficient to hold Released Entities fully harmless. In the event that the panel's actions do not result in Released Entities being held fully harmless, Allergan shall have a Claim for breach of this Agreement by Releasors, with the remedy being payment of sufficient funds to hold Allergan harmless from the Claim Over. For the avoidance of doubt, the prior sentence does not limit or eliminate any other remedy that Allergan may have.

C. To the extent that the Claim Over is based on a contractual indemnity, the obligations under subsection V.B.4 shall extend solely to a Non-Party Covered Conduct Claim against a pharmacy, clinic, hospital or other purchaser or dispenser of Products, a manufacturer that sold or promoted Products, a consultant, and/or a pharmacy benefit manager or other third-party payor. Allergan shall notify the Settling States, to the extent permitted by applicable law, in the event that any of these types of Non-Released Entities asserts a Claim Over arising out of contractual indemnity against it.

D. *General Release*. In connection with the releases provided for in the Agreement, each Settling State (for itself and its Releasors), Participating Subdivision and Participating Special District expressly waives, releases, and forever discharges any and all provisions, rights, and benefits conferred by any law of any state or territory of the United States or

other jurisdiction, or principle of common law, which is similar, comparable, or equivalent to § 1542 of the California Civil Code, which reads:

> **General Release; extent.** A general release does not extend to claims that the creditor or releasing party does not know or suspect to exist in his or her favor at the time of executing the release that, if known by him or her, would have materially affected his or her settlement with the debtor or released party.

A Releasor may thereafter discover facts other than or different from those which it knows, believes, or assumes to be true with respect to the Released Claims, but each Settling State (for itself and its Releasors), Participating Subdivision and Participating Special District hereby expressly waives and fully, finally, and forever settles, releases, and discharges, upon the Effective Date, any and all Released Claims that may exist as of such date but which Releasors do not know or suspect to exist, whether through ignorance, oversight, error, negligence or through no fault whatsoever, and which, if known, would materially affect the Settling States' decision to enter into the Agreement, the Participating Subdivisions' decision to participate in the Agreement, or the Participating Special District's decision to participate in the Agreement.

E. *Res Judicata*. Nothing in the Agreement shall be deemed to reduce the scope of the res judicata or claim preclusive effect that the settlement memorialized in the Agreement, and/or any Consent Judgment or other judgment entered on the Agreement, gives rise to under applicable law.

F. *Representation and Warranty.* The signatories hereto on behalf of their respective Settling State, its Participating Subdivisions, and its Participating Special Districts, expressly represent and warrant that they will obtain on or before the Effective Date (or have obtained) the authority to settle and release, to the maximum extent of the State's power, all Released Claims of (1) their respective Settling State; (2) any of the Settling State's past and present executive departments, state agencies, divisions, boards, commissions and instrumentalities with the regulatory authority to enforce state and federal controlled substances acts; (3) any of their respective Settling State's past and present executive departments, agencies, divisions, boards, commissions and instrumentalities that have the authority to bring Claims related to Covered Conduct seeking money (including abatement and/or remediation) or revocation of a pharmaceutical distribution license; (4) any Participating Subdivisions; and (5) any Participating Special District. For the purposes of clause (3) above, executive departments, agencies, divisions, boards, commissions, and instrumentalities are those that are under the executive authority or direct control of the State's Governor. Also, for the purposes of clause (3), a release from a State's Governor is sufficient to demonstrate that the appropriate releases have been obtained.

G. *Effectiveness*. The releases set forth in the Agreement shall not be impacted in any way by any dispute that exists, has existed, or may later exist between or among the Releasors. Nor shall such releases be impacted in any way by any current or future law, regulation, ordinance, or court or agency order limiting, seizing, or controlling the distribution or use

of the Settlement Fund or any portion thereof, or by the enactment of future laws, or by any seizure of the Settlement Fund or any portion thereof.

H. *Cooperation*. Releasors (i) will not encourage any person or entity to bring or maintain any Released Claim against any Released Entity and (ii) will reasonably cooperate with and not oppose any effort by a Released Entity to secure the prompt dismissal of any and all Released Claims.

I. *Non-Released Claims.* Notwithstanding the foregoing or anything in the definition of Released Claims, the Agreement does not waive, release or limit any criminal liability, Claims for any outstanding liability under any tax or securities law, Claims against parties who are not Released Entities, Claims by private individuals, Claims for Medicaid rebates, Claims asserted, or that could be asserted, by any State, Subdivision, or Special District related to the causes of action in *In re: Generic Pharmaceuticals Pricing Antitrust Litigation*, in the United States District court for the District of Pennsylvania, MDL No. 2724, and any related action (such excluded claims include, but are not limited to, all antitrust claims and any claims related to any non-opioid generic drugs), and any claims arising under the Agreement for enforcement of the Agreement.

VI. Monetary Relief Overview and Maximum Payments

A. Excluding Allergan's share of Implementation Costs and costs of the Settlement Fund Administrator, there are three main categories of monetary payments:

1. *Annual Payments to the Settlement Fund*. These payments are generally addressed in Section VII. The maximum amount Allergan shall pay in Annual Payments to the Settlement Fund is the Net Abatement Amount of $1,799,186,751.00, which reflects the application of the Prior Settlements Credit to the Global Settlement Abatement Amount. Annual Payments will be made over seven (7) years on the Payment Dates. The actual amount paid will depend on, among other things, the level of participation of Eligible States, their Subdivisions, and their Special Districts.

2. *Additional Restitution Amount*. These payments are generally addressed in Section XII. The maximum amount Allergan shall pay for the Additional Restitution Amount is $16,192,680.76. Payments for the Additional Restitution Amount will be made over four (4) years on the Payment Dates. The actual amount paid will depend on the number of Eligible States listed in Exhibit N that become Settling States.

3. *Attorney Fee and Cost Payments*. These payments are generally addressed in Section XII and Exhibits M, R, S, and T. They consist of payments for the State Outside Counsel Fee Fund, the State Cost Fund, and the Attorney Fee and Cost Fund. These payments will be made over four (4) on the Payment Dates. The maximum amount Allergan shall pay into these funds is the Global Settlement Attorney Fee Amount of $206,906,476.36.

B. The aggregate maximum amount Allergan shall pay for these for these payment categories is $2,022,285,908.12 (the "*Post-Credit Global Settlement Amount*"). This figure does not include costs related to injunctive relief and document disclosure addressed in Exhibit P, Implementation Costs, and Settlement Fund Administrator Costs addressed in this Agreement. AbbVie agrees to satisfy the obligations to make the payments due in this Section VI if for any reason Allergan fails to fulfill its payment obligations under Section VI (the "*Payment Obligations*").

C. For purposes of this Agreement only, Releasors represent that fifty-six percent (56%) of the Post-Credit Global Settlement Amount payable by Allergan constitutes consideration for the settlement of Claims involving, arising from, or related to generic opioid drugs that are Products distributed and/or sold before August 2, 2016 by Divested Actavis Generic Entities and other Divested Entities and the operation of Divested Actavis Generic Entities and other Divested Entities related to those generic opioid drugs that are Products before August 2, 2016 that the Releasors are asserting or might otherwise assert or could assert that Allergan (or any other Released Entity) is directly or indirectly and/or jointly or severally liable, including but not limited to, based on parent or control liability or a substantially similar theory. Releasors represent that forty-four percent (44%) of the Post-Credit Global Settlement Amount payable by Allergan constitutes consideration for the settlement of Claims involving, arising from, or related to branded opioid drugs that are Products of or attributable to Allergan or any other Released Entity (including but not limited to branded opioid drugs that are Products distributed and/or sold before August 2, 2016 by Divested Actavis Generic Entities and other Divested Entities and the operation of the Divested Actavis Generic Entities and the other Divested Entities related to those branded opioid drugs that are Products before August 2, 2016) that the Releasors are asserting or might otherwise assert or could assert against Allergan or any other Released Entity, of which seventy-seven percent (77%) is specifically involving, arising from, or related to Kadian® (including but not limited to Kadian® manufactured, distributed, marketed, and/or sold from 1997 through 2008 by King Pharmaceuticals, Inc. and/or Alpharma Inc.).

D. *Settlement Fund Administrator and Implementation Costs*. If this Agreement becomes effective, Allergan shall be responsible for one-third of the Implementation Costs. The full amount of the Implementation Costs shall be jointly advanced by Teva and Allergan. If this Agreement becomes effective, then Allergan shall deduct from Allergan's Initial Year Payment the difference between the excess amount it advanced for Implementation Costs and its one-third obligation for such costs. Settlement Fund Administrator Costs shall be paid out of interest accrued on the Settlement Fund. Should such interest prove insufficient to fully cover the costs, the remaining cost amounts shall be paid one-third by Teva, one-third by Allergan and one-third from the Settlement Fund through the disbursement of Allergan's final Payment Allergan shall not be responsible for any costs incurred by the Settlement Fund Administrator after the disbursement of its final Payment.

VII. Annual Payments to Settlement Fund

A. Structure of Payments to Settlement Fund

1. All payments under this Section VII shall be made into the Settlement Fund, except that where specified, they shall be made into the Settlement Fund Escrow. The Settlement Fund shall be allocated and used only as specified in Section VIII.

2. Allergan shall pay into the Settlement Fund the Net Abatement Amount consisting of $1,799,186,751.00 minus: (1) any offsets specified in subsection VII.C below; (2) any unearned Incentive Payments under subsection VII.E below; and (3) any adjustments under Section XI below.

3. The payments to the Settlement Fund shall be divided into Base Payments and Incentive Payments as provided in subsections VII.D and VII.E below and set out in Exhibit M.

B. Settlement Fund Payment Process

1. Except as otherwise provided in this Agreement, Allergan shall make one Initial Year Payment (the first Annual Payment) and six (6) additional Annual Payments of equal installments of the Net Abatement Amount (after all applicable offsets) into the Settlement Fund. The Settlement Payment Schedule is set forth in Exhibit M. Annual Payments shall be made on the Payment Date, provided that the necessary wire instructions, W-9 form, and Allergan's Bank Verification Form process is completed for the Settlement Fund at least twenty-one (21) days before the relevant payment is due and Allergan has completed any process required by the Settlement Fund Administrator and/or its financial institution(s) to complete the transaction. If there is a delay in making a payment because any of these conditions were not completed at least twenty-one (21) days in advance of the Payment Date, then the Annual Payment will be made within twenty-one (21) days of the completion of these conditions.

2. The Initial Year Payment shall consist of only Base Payments (after all applicable offsets). The other six (6) Annual Payments shall each consist of Base Payments (after all applicable offsets) and Incentive Payments (after all applicable offsets). The amount of the Initial Year Payment and each other Annual Payment, payable by Allergan shall not exceed the maximum amounts allocated to each Payment Year in Exhibit M.

3. To determine each Annual Payment for Payment Year 2 forward, the Settlement Fund Administrator shall use the data in its records sixty (60) days prior to the Payment Date for each payment. Prior to the Effective Date, the Parties will include an exhibit to the Agreement setting forth in detail the process for the Settlement Fund Administrator obtaining relevant data and for distributing funds to Settling States and Exhibit G Participants consistent with the terms of this Agreement as quickly as practical.

4. The Settlement Fund Administrator shall determine the Annual Payment and the Statewide Payment Amount for each Settling State, consistent with the provisions in Exhibit L, by:

   a. determining, for each Settling State, the amount of Base Payments and Incentive Payments to which the State is entitled by applying the criteria in this Section;

   b. applying any reductions, or offsets required by Sections VII and XI; and

   c. determining the total amount owed by Allergan to all Settling States and Exhibit G Participant.

5. If, no later than fifty (50) days prior to the Payment Date for each payment for Payment Year 2 forward, Allergan and the Enforcement Committee inform the Settlement Fund Administrator that they agree on the amount of the Annual Payment and the Statewide Payment Amount for each Settling State, Allergan shall pay the agreed-upon Annual Payment amount on the Payment Date and the Settlement Fund Administrator shall treat those amounts as the determination described in subsection VII.B.4. If the Settlement Fund Administrator is not so informed, it shall give notice to Allergan, the Settling States, and the Enforcement Committee of the amount of the Annual Payment, and the Statewide Payment Amount for each Settling State, following the determination described in subsection VII.B.4, and the following timeline shall apply:

   a. Within twenty-one (21) days of the notice provided by the Settlement Fund Administrator, Allergan, any Settling State or the Enforcement Committee may dispute, in writing, the calculation of the Annual Payment, or the Statewide Payment Amount for a Settling State. Such disputing party must provide a written notice of dispute to the Settlement Fund Administrator, the Enforcement Committee, any affected Settling State, and Allergan identifying the nature of the dispute, the amount of money that is disputed, and the Settling State(s) affected.

   b. Within twenty-one (21) days of the sending of a written notice of dispute, any affected party may submit a response, in writing, to the Settlement Fund Administrator, the Enforcement Committee, any affected Settling State, and Allergan identifying the basis for disagreement with the notice of dispute.

   c. If no response is filed, the Settlement Fund Administrator shall adjust the amount calculated consistent with the written notice of dispute, and Allergan shall pay the adjusted amount as the Annual Payment on the Payment Date. If a written response to the written notice of dispute is timely sent to the Settlement Fund Administrator, the Settlement Fund Administrator shall notify Allergan of the preliminary amount to be paid, which shall be the greater of the amount originally calculated by the Settlement Fund Administrator or the amount that would be consistent with

the notice of dispute, *provided*, *however* that in no circumstances shall the preliminary amount to be paid be higher than the maximum amount of Base Payments and Incentive Payments for that payment as set forth in Exhibit M. For the avoidance of doubt, a transfer of payments from the Settlement Fund Escrow for other Payment Years does not count toward determining whether the amount to be paid is higher than the maximum amount of Base Payments and Incentive Payments for that payment as set forth in Exhibit M.

d. The Settlement Fund Administrator shall place any disputed amount of the preliminary amount paid by Allergan into the Settlement Fund Escrow and shall disburse any undisputed amount to each Settling State and its Exhibit G Participants.

6. If a Settling State informs the Settlement Fund Administrator that it and its Exhibit G Participants have reached consensus on the amount of its Statewide Payment Amount, determined pursuant to subsection VII.B.3 or VII.B.4, to be distributed to the Settling State, among its separate types of funds (if applicable), and among its Exhibit G Participants, the Settlement Fund Administrator shall disburse the Statewide Payment Amount pursuant to the consensus distribution amounts provided by the Settling State. For a Settling States that does not so notify the Settlement Fund Administrator, the Settlement Fund Administrator shall allocate the Settling State's Statewide Payment Amount, pursuant to Section VII, among the separate types of funds for the Settling State (if applicable), and among its Exhibit G Participants using the following procedures:

a. As soon as possible for each payment and following the determination described in subsection VII.B.3 and VII.B.4, the Settlement Fund Administrator shall give notice to the relevant Settling States and their Exhibit G Participants of the amount to be received by each Settling State, the amount to be received by the separate types of funds for each Settling State (if applicable), and the amount to be received by each Settling State's Exhibit G Participants.

b. Within twenty-one (21) days of the notice provided by the Settlement Fund Administrator, any Settling State or Exhibit G Participant may dispute, in writing, the calculation of the amount to be received by a Settling State and/or its Exhibit G Participants. A dispute will be deemed invalid and disregarded if it challenges the allocations adopted by a State-Subdivision Agreement approved pursuant to the provisions of Exhibit O or by statute. Such disputing party must provide a written notice of dispute to the Settlement Fund Administrator, any affected Settling State, and any affected Exhibit G Participant identifying the nature of the dispute, the amount of money that is disputed, and the Settling State(s) affected.

c. Within twenty-one (21) days of the sending of a written notice of dispute, any affected Settling State or any affected Exhibit G Participant may submit

a response, in writing, to the Settlement Fund Administrator, any affected Settling State and any affected Exhibit G Participant identifying the basis for disagreement with the notice of dispute.

d. If no response is filed, the Settlement Fund Administrator shall adjust the amount calculated consistent with the written notice of dispute.

e. The Settlement Fund Administrator shall place any disputed amount into the Settlement Fund Escrow and shall disburse any undisputed amount to the Settling State and its Exhibit G Participants.

7. Disputes described in this subsection (other than those for which no response is filed under subsection VII.B.5.c or VII.B.6.d) shall be resolved in accordance with the terms of Section XIV.

8. The Settlement Fund Administrator may combine the disbursements of Annual Payments with disbursement of funds under other comparable opioid settlements. In determining when disbursements for each Annual Payment will be made, the Settlement Fund Administrator may take into account the timeline for the availability of disbursements under other comparable opioid settlements.

9. For the avoidance of doubt, Subdivisions and Special Districts not listed on Exhibit G shall not receive an allocation from the Subdivision Fund.

C. Offsets to Annual Payments to the Settlement Fund for Non-Settling States

1. An offset equal to the Net Abatement Amount of $1,799,186,751.00 times the State Allocation Percentage assigned to each Non-Settling State in Exhibit F-2 shall be deducted from the total amount to be paid by Allergan to the Settlement Fund.

2. Non-Settling States shall not be eligible for any payments or have any rights in connection with this Agreement. Accordingly, the stated maximum dollar amounts of the Annual Payments specified in Exhibit M are reduced by the aggregate State Allocation Percentage of Non-Settling States as set forth in Exhibit F-2.

D. Base Payments

1. Allergan shall make Base Payments into the Settlement Fund in an amount equal to 45% of the Net Abatement Amount of $1,799,186,751.00 minus any offsets for Non-Settling States specified in Section VII.C.I. The maximum total for Base Payments is $809,634,037.95. The Base Payments will be paid in accordance with the Settlement Payment Schedule specified by Exhibit M, subject to potential offsets for Non-Settling States as provided in Section VII.C.1.

2. The Base Payments will be allocated by Settling State proportionate to each Settling State's State Allocation Percentage in Exhibit F-2, adjusted for any Non-Settling State.

E. Incentive Abatement Payments

1. Allergan shall make potential Incentive Payments totaling up to a maximum of 55% of the Net Abatement Amount of $1,799,186,751.00 for all Settling States with the actual amount depending on whether and the extent to which the criteria set forth below are met in each Settling State. The maximum total for Incentive Payments is $989,552,713.05.

2. The maximum total Incentive Payment for any Settling State shall be no more than the maximum total for Incentive Payments listed in Section VII.E.1 times the Settling State's State Allocation Percentage specified in Exhibit F-2. Incentive Payments are state-specific, with each Settling State receiving an Incentive Payment based on the incentives for which it is eligible for that year under the criteria set forth below and any offset specified in Section XI.

3. The Incentive Payments shall be divided among four (4) categories, referred to as Incentives A–D. Incentives A–C will be due in installments over six (6) Payment Years beginning with Annual Payment 2 and Incentive D will be due in installments over four (4) years beginning with Annual Payment 4, as shown on Exhibit M. The total amount of Incentive Payments in an Annual Payment shall be the sum of the Incentive Payments for which individual Settling States are eligible for that Payment Year under the criteria set forth below. The Incentive Payments shall be made with respect to a specific Settling State based on its eligibility for that Payment Year under the criteria set forth below.

4. The maximum amount available for Incentive Payments, $989,552,713.05, is divided into two pools. The maximum amount of Incentive Payments for Incentives A-C shall be $863,609,640.48, which is 48% of the maximum Net Abatement Amount. A Settling State may be eligible for its full allocable share of this payment by either achieving Incentive A or by fully earning both Incentives B and C. The maximum amount of Incentive Payments for Incentive D shall be $125,943,072.57, which is 7% of the maximum Net Abatement Amount. (These figures represent maximum payments prior to being adjusted for any offsets and assumes every State is a Settling State and will satisfy the requirements specified below to earn its maximum incentive amount. The Incentive Payments will be paid in accordance with the payment schedule in Exhibit M, subject to potential deductions as provided herein.) A Settling State qualifies to receive Incentive Payments in addition to Base Payments if it meets the incentive eligibility requirements specified below. Settling States may qualify for Incentive Payments in four ways. If a Settling State qualifies for Incentive A, it will become entitled to receive the maximum payment allocable to the State for Incentives A-C as stated in subsection VII.E.5. If a Settling State does not qualify for Incentive A, it can alternatively qualify for Incentive B and/or Incentive C. A Settling State can qualify for Incentive D regardless of whether it qualifies for another Incentive Payment.

5. *Incentive A: Full Participation or Fully Released Claims of Litigating Subdivisions, Litigating Special Districts, Non-Litigating Subdivisions with Population Greater Than 10,000, and Non-Litigating Covered Special Districts*.

   a. A Settling State's total potential Incentive A payment allocation is $863,609,640.48 times the percentage allocation assigned that Settling State in Exhibit F-2.

   b. A State qualifies for Incentive A by: (1) complete participation in the form of releases consistent with Section V above from all Litigating Subdivisions and Litigating Special Districts, Non-Litigating Subdivisions with population over 10,000, and Non-Litigating Covered Special Districts; (2) a Bar; or (3) a combination of approaches in clauses (1)-(2) that achieves the same level of resolution of Subdivision and Special District Claims (e.g., a law barring future litigation combined with full joinder by Litigating Subdivisions and Litigating Special Districts). For purposes of Incentive A, a Subdivision or Special District is considered a "Litigating Subdivision" or "Litigating Special District" if it has brought Released Claims against Released Entities on or before the Reference Date; all other Subdivisions and Special Districts are considered "Non-Litigating." For purposes of Incentive A, Non-Litigating Covered Special Districts shall not include a Special District with any of the following words or phrases in its name: mosquito, pest, insect, spray, vector, animal, air quality, air pollution, clean air, coastal water, tuberculosis, and sanitary.

   c. If a Settling State qualifies for Incentive A after receiving an Incentive Payment under Incentives B or C, described below, the Settling State's payments under Incentive A will equal the remainder of its total potential Incentive A payments less any payments previously received under Incentives B or C. A Settling State that receives all of its total potential Incentive A payment allocation shall not receive additional Incentive Payments under Incentives B or C.

   d. A Settling State that is not eligible for Incentive A as of two (2) years after the Effective Date shall not be eligible for Incentive A for that Payment Year or any subsequent Payment Years.

6. *Incentive B: Early Participation or Released Claims by Litigating Subdivisions and Litigating Special Districts.*

   a. If a Settling State does not qualify for Incentive A, it may still qualify to receive up to 60% of its total potential Incentive A payment allocation under Incentive B.

   b. A Settling State can qualify for an Incentive B payment if Litigating Subdivisions and Litigating Special Districts collectively representing at least 75% of the Settling State's litigating population are either Participating

Subdivisions, Participating Special Districts, or have their claims resolved through Case-Specific Resolutions.

(i) A Settling State's litigating population is the sum of the population of all Litigating Subdivisions and Litigating Special Districts. A Settling State's litigating population shall include all Litigating Subdivisions and Litigating Special Districts whose populations overlap in whole or in part with other Litigating Subdivisions and Litigating Special Districts, for instance in the case of a Litigating Special District, city, or township contained within a county.

(ii) For example, if School District A is a Litigating Special District in City B with a population of 1, City B is itself a Litigating Subdivision with a population of 8, and City B is located within County C, and County C is a Litigating Subdivision with a population 10, then each of their individual populations shall be added together (i.e., 1 + 8 +10) to determine the total litigating population (i.e., 19).

c. The following time periods apply to Incentive B payments:

(i) Period 1: Zero to two hundred ten (210) days after the Effective Date.

(ii) Period 2: Two hundred eleven (211) days to one year after the Effective Date.

(iii) Period 3: One year and one day to two years after the Effective Date.

d. Within Period 1: If Litigating Subdivisions and Litigating Special Districts collectively representing at least 75% of a Settling State's litigating population are Participating Subdivisions or Participating Special Districts, or have their Claims resolved through Case-Specific Resolutions during Period 1, then a sliding scale will determine the share of the funds available under Incentive B, with a maximum of 60% of the Settling State's total potential Incentive Payment allocation available. Under that sliding scale, if Litigating Subdivisions and Litigating Special Districts collectively representing 75% of a Settling State's litigating population become Participating Subdivisions or Participating Special Districts, or achieve Case-Specific Resolution status by the end of Period 1, a Settling State will receive 50% of the total amount available to it under Incentive B. If more Litigating Subdivisions and Litigating Special Districts become Participating Subdivisions or Participating Special Districts, or achieve Case-Specific Resolution status, the Settling State shall receive an increased percentage of the total amount available to it under Incentive B as shown in the table below.

Participation or Case-Specific Resolution Levels (As percentage of litigating population)	**Incentive B Award** (As percentage of total amount available to Settling State for Incentive B)
75%	50%
76%	52%
77%	54%
78%	56%
79%	58%
80%	60%
85%	70%
90%	80%
95%	90%
100%	100%

e. Within Period 2: If a Settling State did not qualify for an Incentive B payment in Period 1 but Litigating Subdivisions and Litigating Special Districts collectively representing at least 75% of the Settling State's litigating population become Participating Subdivisions or Participating Special Districts, or achieve Case-Specific Resolution status by the end of Period 2, then the Settling State qualifies for 75% of the Incentive B payment it would have qualified for in Period 1.

f. Within Period 3: If a Settling State did not qualify for an Incentive B payment in Periods 1 or 2, but Litigating Subdivisions and Litigating Special Districts collectively representing at least 75% of the Settling State's litigating population become Participating Subdivisions or Participating Special Districts, or achieve Case-Specific Resolution status by the end of Period 3, then the Settling State qualifies for 50% of the Incentive B payment it would have qualified for in Period 1.

g. A Settling State that receives the Incentive B payment for Periods 1 and/or 2 can receive additional payments if it secures participation from additional Litigating Subdivisions and/or Litigating Special Districts (or Case-Specific Resolutions of their Claims) during Periods 2 and/or 3. Those additional payments would equal 75% (for additional participation or Case-Specific Resolutions during Period 2) and 50% (for additional participation or Case-Specific Resolutions during Period 3) of the amount by which the increased litigating population levels would have increased the Settling State's Incentive B payment if they had been achieved in Period 1.

h. The percentage of the available Incentive B amount for which a Settling State is eligible by the end of Period 3 shall cap its eligibility for that Payment Year and all subsequent Payment Years. If Litigating Subdivisions and Litigating Special Districts that have become Participating Subdivisions or Participating Special Districts, or achieved Case-Specific Resolution

status collectively represent less than 75% of a Settling State's litigating population by the end of Period 3, the Settling State shall not receive any Incentive B payment.

i. If there are no Litigating Subdivisions or Litigating Special Districts in a Settling State, and that Settling State is otherwise eligible for Incentive B, that Settling State will receive its full allocable share of Incentive B.

j. Incentives earned under Incentive B shall accrue after each of Periods 1, 2, and 3. Calculations to increase Incentive Payments in later periods based on additional joinder shall not reduce any amount already vested at the end of a prior period.

7. *Incentive C: Participation or Release of Claims by Primary Subdivisions*

a. If a Settling State does not qualify for Incentive A, it may still qualify to receive up to 40% of its total potential Incentive A payment allocation under Incentive C, which has two parts.

b. Part 1: Under Incentive C, Part 1, a Settling State can receive up to 75% of its Incentive C allocation. A Settling State can qualify for a payment under Incentive C, Part 1 only if Primary Subdivisions (whether Litigating Primary Subdivisions or Non-Litigating Primary Subdivisions as of the Reference Date) collectively representing at least 60% of the Settling State's Primary Subdivision population become Participating Subdivisions or achieve Case-Specific Resolution status.

(i) A Settling State's Primary Subdivision population is the sum of the population of all Primary Subdivisions (whether Litigating Primary Subdivisions or Non-Litigating Primary Subdivisions as of the Reference Date). A Settling State's Primary Subdivision population shall include all Primary Subdivisions whose populations overlap in whole or in part with other Primary Subdivisions, for instance in the case of a Primary Subdivision that is a city contained within a Primary Subdivision that is a county. Because Primary Subdivisions include Subdivisions whose populations overlap in whole or in part with other Subdivisions, the Settling State's Primary Subdivision population may be greater than the Settling State's total population. (Special Districts are not relevant for purposes of Incentive C calculations.)

(ii) For example, if City A is a Primary Subdivision with a population of 1 within County B, and County B is a Primary Subdivision with a population of 10, then each of their individual populations shall be added together (i.e., 1+10) to determine the total Primary Subdivision population (i.e., 11).

c. A sliding scale will determine the share of the funds available under Incentive C, Part 1 to Settling States meeting the minimum 60% threshold. Under that sliding scale, if a Settling State secures participation or Case-Specific Resolutions from Primary Subdivisions representing 60% of its total Primary Subdivision population, it will receive 40% of the total amount potentially available to it under Incentive C, Part 1. If a Settling State secures participation or Case-Specific Resolutions from Primary Subdivisions representing more than 60% of its Primary Subdivision population, the Settling State shall be entitled to receive a higher percentage of the total amount potentially available to it under Incentive C, Part 1, on the scale shown in the table below. If there are no Primary Subdivisions, and that Settling State is otherwise eligible for Incentive C, that Settling State will receive its full allocable share of Incentive C, Part 1.

Participation or Case-Specific Resolution Levels (As percentage of total Primary Subdivision population)	**Incentive C, Part 1 Award** (As percentage of total amount available to Settling State for Incentive C, Part 1)
60%	40%
70%	45%
80%	50%
85%	55%
90%	60%
91%	65%
92%	70%
93%	80%
94%	90%
95%	100%

d. Part 2: If a Settling State qualifies to receive an incentive under Incentive C, Part 1, the Settling State can also qualify to receive an additional incentive amount equal to 25% of its total potential Incentive C allocation by securing 100% participation of the ten (10) largest Subdivisions by population in the Settling State. (Special Districts are not relevant for purposes of this calculation.) If a Settling State does not qualify for any amount under Incentive C, Part 1, it cannot qualify for Incentive C, Part 2.

e. Incentives earned under Incentive C shall accrue on an annual basis up to three years after the Effective Date. At one, two, and three years after the Effective Date, the Settlement Fund Administrator will conduct a lookback to assess which Subdivisions had agreed to participate or had their Claim resolved through a Case-Specific Resolution that year. Based on the look-back, the Settlement Fund Administrator will calculate the incentives accrued under Incentive C for the year. The percentage of the available Incentive C amount, for both Part 1 and Part 2, for which a Settling State is

eligible three years after the Effective Date shall cap its eligibility for that Payment Year and all subsequent Payment Years.

8. *Incentive D: No Qualifying Lawsuits Surviving Threshold Motions at Two Look-Back Dates.*

a. A Settling State's total potential Incentive D payment allocation is $125,943,072.57 times the percentage allocation assigned that Settling State in Exhibit F-2.

b. If, at any time within five and one-half (5.5) years of the Preliminary Agreement Date, any Subdivision or Special District within a Settling State files litigation pursuing Released Claims against any Released Entity (a "*Qualifying Lawsuit*"), then Allergan shall, within thirty (30) days of Allergan or any Released Entity being served or otherwise informed of the prosecution of such Released Claims, provide notice to the Settling State in which such Released Claims are being pursued and shall give the relevant Settling State a reasonable opportunity to extinguish the Released Claims without any payment or any other obligations being imposed upon any Released Entities (apart from the Global Settlement Amount payable by Allergan under the Agreement or the Injunctive Relief Terms incurred by it). The relevant Settling State and Allergan shall confer and use reasonable efforts to promptly resolve a Qualifying Lawsuit so that it is dismissed with prejudice. Nothing in this subsection creates an obligation for a Settling State to make a monetary payment or incur any other obligation to an entity filing a Qualifying Lawsuit.

c. Part 1: Under Incentive D, Part 1, a Settling State shall receive 50% of its total potential Incentive D payment allocation if, at two years after the Effective Date (the "*First Look-Back Date*"), there are no pending Released Claims from a Qualifying Lawsuit that survived a Threshold Motion within the Settling State against any Released Entities.

d. Part 2: Under Incentive D, Part 2, a Settling State shall receive 50% of its total potential Incentive D payment allocation if, at five and one-half (5.5) years after the Preliminary Agreement Date (the "*Second Look-Back* Date"), there are no pending Released Claims from a Qualifying Lawsuit that survived a Threshold Motion within the Settling State against any Released Entities.

e. After the First Look-Back Date, a Settling State can become re-eligible for Incentive Payment D Part 1 if the lawsuit that survived a Threshold Motion is dismissed pursuant to a later motion on grounds included in the Threshold Motion, in which case the Settling State shall become eligible for Incentive Payment D less any litigation fees and cost incurred by the Released Entity in the interim, except that if the dismissal motion occurs after the

completion of opening statements in such action, the Settling State shall not be eligible for Incentive Payment D.

VIII. Allocation and Use of Settlement Funds

A. *Components of Settlement Fund*. The Settlement Fund shall be comprised of an Abatement Accounts Fund, a State Fund, and a Subdivision Fund for each Settling State. The payments under Section VI into the Settlement Fund shall be initially allocated among those three (3) sub-funds and distributed and used as provided below or as provided for by a State-Subdivision Agreement (or other State-specific allocation of funds). Unless otherwise specified herein, payments placed into the Settlement Fund do not revert back to Allergan.

B. *Use of Settlement Payments*. It is the intent of the Parties that the payments disbursed from the Settlement Fund to Settling States and Exhibit G Participants be for Opioid Remediation, subject to limited exceptions that must be documented in accordance with subsection VII.C. In no event may less than 85% of Allergan's payments pursuant to Section VI.A.1-3 over the entirety of all Payment Years (but not any single Payment Year) be spent on Opioid Remediation.

C. While disfavored by the Parties, a Settling State or Exhibit G Participant may use monies from the Settlement Fund (that have not been restricted by this Agreement solely to future Opioid Remediation) for purposes that do not qualify as Opioid Remediation. If, at any time, a Settling State or Exhibit G Participant uses any monies from the Settlement Fund for a purpose that does not qualify as Opioid Remediation, such Settling State or Exhibit G Participant shall identify such amounts and report to the Settlement Fund Administrator and Allergan how such funds were used, including if used to pay attorneys' fees, investigation costs, litigation costs, or costs related to the operation and enforcement of this Agreement, respectively. It is the intent of the Parties that the reporting under this subsection VIII.C shall be available to the public. For the avoidance of doubt, (a) any amounts not identified under this subsection VIII.C as used to pay attorneys' fees, investigation costs, or litigation costs shall be included in the "Compensatory Restitution Amount" for purposes of subsection VIII.G and (b) Participating Subdivisions not listed on Exhibit G or Participating Special Districts that receive monies from the Settlement Fund indirectly may only use such monies from the Settlement Fund for purposes that qualify as Opioid Remediation.

D. *Allocation of Settlement Fund.* The allocation of the Settlement Fund allows for different approaches to be taken in different states, such as through a State-Subdivision Agreement. Given the uniqueness of States and their Subdivisions, Settling States and Participating Subdivisions are encouraged to enter into State-Subdivision Agreements in order to direct the allocation of their portion of the Settlement Fund. As set out below, the Settlement Fund Administrator will make an initial allocation to three (3) state-level sub-funds. The Settlement Fund Administrator will then, for each Settling State and its Exhibit G Participants, apply the terms of this Agreement and any relevant State-Subdivision Agreement, Statutory Trust, Allocation Statute, or voluntary redistribution of funds as set out below before disbursing the funds.

1. Base Payments. The Settlement Fund Administrator will allocate Base Payments under subsection VII.D among the Settling States in proportion to their respective State Allocation Percentages. Base Payments for each Settling State will then be allocated 15% to its State Fund, 70% to its Abatement Accounts Fund, and 15% to its Subdivision Fund. Amounts may be reallocated and will be distributed as provided in subsection VIII.E.

2. Incentive Payments. The Settlement Fund Administrator will treat Incentive Payments under subsection VII.E on a State-specific basis. Incentive payments for which a Settling State is eligible under subsection VII.E will be allocated 15% to its State Fund, 70% to its Abatement Accounts Fund, and 15% to its Subdivision Fund. Amounts may be reallocated and will be distributed as provided in subsection VIII.E.

3. Application of Adjustments. If any offset under Section XI applies with respect to a Settling State, the offset shall be applied proportionally to all amounts that would otherwise be apportioned and distributed to the State Fund, the Abatement Accounts Fund, and the Subdivision Fund for that State.

4. Settlement Fund Administrator. Prior to the Initial Participation Date, Allergan and the Enforcement Committee will agree to a detailed mechanism consistent with the foregoing for the Settlement Fund Administrator to follow in allocating, apportioning, and distributing payments, which shall be appended hereto as Exhibit L.

E. *Settlement Fund Reallocation and Distribution*. As set forth below, within a particular Settling State's account, amounts contained in the Settlement Fund sub-funds may be reallocated and distributed per a State-Subdivision Agreement or other means. If the apportionment of amounts is not addressed and controlled under subsections VIII.E.1-2, then the default provisions of subsection VIII.E.4 apply. It is not necessary that a State-Subdivision Agreement or other means of allocating funds pursuant to subsections VIII.E.1-2 address all of the Settlement Fund sub-funds. For example, a Statutory Trust might only address disbursements from a Settling State's Abatement Accounts Fund.

1. Distribution by State-Subdivision Agreement. If a Settling State has a State-Subdivision Agreement, amounts apportioned to that State's State Fund, Abatement Accounts Fund, and Subdivision Fund under subsection VIII.D shall be reallocated and distributed as provided by that agreement. Any State-Subdivision Agreement entered into or amended after July 26, 2022 shall be applied only if it requires: (1) that all amounts be used for Opioid Remediation except as allowed by subsection VIII.C, and (2) that at least 70% of amounts be used solely for future Opioid Remediation (references to "future Opioid Remediation" include amounts paid to satisfy any future demand by another governmental entity to make a required reimbursement in connection with the past care and treatment of a person related to the Alleged Harms). For a State-Subdivision Agreement to be applied to the relevant portion of an Annual Payment, notice must be provided to Allergan and the Settlement Fund Administrator at least ten (10) days prior to the Settlement

Administrator's disbursement of such portion to a Settling State and its Participating Subdivisions and Special Districts.

2. Distribution by Allocation Statute. If a Settling State has an Allocation Statute and/or a Statutory Trust that addresses allocation or distribution of amounts apportioned to such State's State Fund, Abatement Accounts Fund, and/or Subdivision Fund and that, to the extent any or all such sub-funds are addressed, requires (1) all amounts to be used for Opioid Remediation except as allowed by subsection VIII.C, and (2) at least 70% of all amounts to be used solely for future Opioid Remediation, then, to the extent allocation or distribution is addressed, the amounts apportioned to that State's State Fund, Abatement Accounts Fund, and Subdivision Fund under subsection VIII.D shall be allocated and distributed as addressed and provided by the applicable Allocation Statute or Statutory Trust. For the avoidance of doubt, an Allocation Statute or Statutory Trust need not address all three (3) sub-funds that comprise the Settlement Fund, and if the applicable Allocation Statute or Statutory Trust does not address distribution of all or some of these three (3) sub-funds, the applicable Allocation Statute or Statutory Trust does not replace the default provisions in subsection VIII.E.4 of any such unaddressed fund. For example, if an Allocation Statute or Statutory Trust that meets the requirements of this subsection VIII.E only addresses funds restricted to abatement, then the default provisions in this Agreement concerning allocation among the three (3) sub-funds comprising the Settlement Fund and the distribution of the State Fund and Subdivision Fund for that State would still apply, while the distribution of the applicable State's Abatement Accounts Fund would be governed by the qualifying Allocation Statute or Statutory Trust.

3. Voluntary Redistribution. A Settling State may choose to reallocate all or a portion of its State Fund to its Abatement Accounts Fund. An Exhibit G Participant may choose to reallocate all or a portion of its allocation from the Subdivision Fund to the State's Abatement Accounts Fund or to another Participating Subdivision or Participating Special District. The Settlement Fund Administrator is not required to honor voluntary redistribution for which notice is provided to it less than sixty (60) days prior to the Payment Date.

4. Distribution in the Absence of a State-Subdivision Agreement, Allocation Statute, or Statutory Trust. If subsections VIII.E.1-2 do not apply, and subject to any voluntary redistribution pursuant to subsection VIII.E.3, amounts apportioned to that State's State Fund, Abatement Accounts Fund, and Subdivision Fund under subsection VIII.D shall be distributed as follows:

   a. Amounts apportioned to that State's State Fund shall be distributed to that State.

   b. Amounts apportioned to that State's Abatement Accounts Fund shall be distributed consistent with subsection VIII.F. Each Settling State shall submit to the Settlement Fund Administrator a designation of a lead state agency or other entity to serve as the single point of contact for that Settling

State's funding requests from the Abatement Accounts Fund and other communications with the Settlement Fund Administrator. The designation of an individual entity is for administrative purposes only and such designation shall not limit funding to such entity or even require that such entity receive funds from this Agreement. The designated entity shall be the only entity authorized to request funds from the Settlement Fund Administrator to be disbursed from that Settling State's Abatement Accounts Fund. If a Settling State has established a Statutory Trust then that Settling State's single point of contact may direct the Settlement Fund Administrator to release the State's Abatement Accounts Fund to the Statutory Trust.

c. Amounts apportioned to that State's Subdivision Fund shall be distributed to Participating Subdivisions in that State listed on Exhibit G per the Subdivision Allocation Percentage listed in Exhibit G. Subsection X.I shall govern amounts that would otherwise be distributed to Non-Participating Subdivisions listed in Exhibit G.

d. Special Districts shall not be allocated funds from the Subdivision Fund, except through a voluntary redistribution allowed by subsection VIII.E.3. A Settling State may allocate funds from its State Fund or Abatement Accounts Fund for Special Districts.

5. Restrictions on Distribution. No amounts may be distributed from the Subdivision Fund contrary to Section IX, *i.e.*, no amounts may be distributed directly to Non-Participating Subdivisions or to Later Participating Subdivisions in excess of what is permissible under subsection IX.E. Amounts allocated to the Subdivision Fund that cannot be distributed by virtue of the preceding sentence shall be distributed into the sub-account in the Abatement Accounts Fund for the Settling State in which the Subdivision is located, unless those payments are redirected elsewhere by a State-Subdivision Agreement described in subsection VIII.E.1 or by an Allocation Statute or a Statutory Trust described in subsection VIII.E.2.

F. *Provisions Regarding Abatement Accounts Fund.*

1. State-Subdivision Agreement, Allocation Statute, and Statutory Trust Fund Provisions. A State-Subdivision Agreement, Allocation Statute, or Statutory Trust may govern the operation and use of amounts in that State's Abatement Accounts Fund so long as it complies with the requirements of subsection VIII.E.1 or VIII.E.2 as applicable, and all direct payments to Subdivisions comply with subsections IX.E-H.

2. Absence of a State-Subdivision Agreement, Allocation Statute, or Statutory Trust. In the absence of a State-Subdivision Agreement, Allocation Statute, or Statutory Trust that addresses distribution, the Abatement Accounts Fund will be used solely for future Opioid Remediation and the following shall apply with respect to a Settling State:

a. *Regional Remediation.*

(i) At least 50% of distributions for remediation from a State's Abatement Accounts Fund shall be annually allocated and tracked to the regional level. A Settling State may allow the Advisory Committee established pursuant to subsection VIII.F.2.d to define its regions and assign regional allocations percentages. Otherwise, a Settling State shall (1) define its initial regions, which shall consist of one (1) or more Subdivisions and which shall be designated by the State agency with primary responsibility for substance abuse disorder services employing, to the maximum extent practical, existing regions established in that State for opioid abuse treatment or other public health purposes; and (2) assign initial regional allocation percentages to the regions based on the Subdivision Allocation Percentages in Exhibit G and an assumption that all Subdivisions listed on Exhibit G will become Participating Subdivisions.

(ii) This minimum regional expenditure percentage is calculated on the Settling State's initial Abatement Accounts Fund allocation and does not include any additional amounts a Settling State has directed to its Abatement Accounts Fund from its State Fund, or any other amounts directed to the fund. A Settling State may dedicate more than 50% of its Abatement Accounts Fund to the regional expenditure and may annually adjust the percentage of its Abatement Accounts Fund dedicated to regional expenditures as long as the percentage remains above the minimum amount.

(iii) The Settling State (1) has the authority to adjust the definition of the regions, and (2) may annually revise the percentages allocated to each region to reflect the number of Subdivisions in each region that are Non-Participating Subdivisions.

b. *Subdivision Block Grants*. Certain Subdivisions listed on Exhibit G shall be eligible to receive regional allocation funds in the form of a block grant for future Opioid Remediation. A Participating Subdivision listed on Exhibit G eligible for block grants is a county or parish (or in the case of States that do not have counties or parishes that function as political subdivisions, a city) that (1) does not contain a Litigating Subdivision or a Later Litigating Subdivision for which it has the authority to end the litigation through a release, Bar, or other action; (2) either (i) has a population of 400,000 or more or (ii) in the case of California has a population of 750,000 or more; and (3) has funded or otherwise managed an established health care or treatment infrastructure (e.g., health department or similar agency). Each Subdivision listed on Exhibit G eligible to receive block grants shall be assigned its own region.

c. *Small States*. Notwithstanding the provisions of subsection VIII.F.2.a, Settling States with populations under four (4) million that do not have existing regions described in subsection VIII.F.2.a shall not be required to establish regions. However, such a Settling State that contains one (1) or more Subdivisions listed on Exhibit G eligible for block grants under subsection VIII.F.2.b shall be divided regionally so that each block-grant eligible Subdivision listed on Exhibit G is a region and the remainder of the State is a region.

d. *Advisory Committee*. The Settling State shall designate an Opioid Settlement Remediation Advisory Committee (the "*Advisory Committee*") to provide input and recommendations regarding remediation spending from that Settling State's Abatement Accounts Fund. A Settling State may elect to use an existing advisory committee or similar entity (created outside of a State-Subdivision Agreement or Allocation Statute); *provided, however*, the Advisory Committee or similar entity shall meet the following requirements:

(i) Written guidelines that establish the formation and composition of the Advisory Committee, terms of service for members, contingency for removal or resignation of members, a schedule of meetings, and any other administrative details;

(ii) Composition that includes at least an equal number of local representatives as state representatives;

(iii) A process for receiving input from Subdivisions and other communities regarding how the opioid crisis is affecting their communities, their abatement needs, and proposals for abatement strategies and responses; and

(iv) A process by which Advisory Committee recommendations for expenditures for Opioid Remediation will be made to and considered by the appropriate state agencies.

3. Abatement Accounts Fund Reporting. The Settlement Fund Administrator shall track and assist in the report of remediation disbursements as agreed to among the Parties.

G. *Nature of Payment.* Allergan, the Settling States, the Participating Subdivisions, and the Participating Special Districts, acknowledge and agree that notwithstanding anything to the contrary in this Agreement, including, but not limited to, the scope of the Released Claims:

1. Allergan has entered into this Agreement to avoid the delay, expense, inconvenience, and uncertainty of further litigation;

2. The Settling States, the Participating Subdivisions, and the Participating Special Districts sought compensatory restitution (within the meaning of 26 U.S.C.

§ 162(f)(2)(A)) as damages for the Alleged Harms allegedly suffered by the Settling States, Participating Subdivisions and Participating Special Districts;

3. By executing this Agreement the Settling States, the Participating Subdivisions, and the Participating Special Districts certify that: (a) the Compensatory Restitution Amount is no greater than the amount, in the aggregate, of the Alleged Harms allegedly suffered by the Settling States, Participating Subdivisions and Participating Special Districts; and (b) the portion of the Compensatory Restitution Amount received by each Settling State, Participating Subdivision or Participating Special Districts is no greater than the amount of the Alleged Harms allegedly suffered by such Settling State, Participating Subdivision or Participating Special Districts;

4. The payment of the Compensatory Restitution Amount by Allergan constitutes, and is paid for, compensatory restitution (within the meaning of 26 U.S.C. § 162(f)(2)(A)) for alleged damage or harm (as compensation for alleged damage or harm arising out of alleged bodily injury) allegedly caused by Allergan;

5. The Compensatory Restitution Amount is being paid as compensatory restitution (within the meaning of 26 U.S.C. § 162(f)(2)(A)) in order to restore, in whole or in part, the Settling States, Participating Subdivisions and Participating Special Districts to the same position or condition that they would be in had the Settling States, Participating Subdivisions and Participating Special Districts not suffered the Alleged Harms;

6. No portion of the Compensatory Restitution Amount represents reimbursement to any Settling State, Participating Subdivision, Participating Special District, or other person or entity for the costs of any investigation or litigation. The entire Compensatory Restitution Amount is properly characterized as described in subsection VIII.G. No portion of the Compensatory Restitution Amount constitutes disgorgement or is properly characterized as the payment of statutory or other fines, penalties, punitive damages, other punitive assessments, or attorneys' fees; and

7. The Designated State, on behalf of all Settling States, Participating Subdivisions, and Participating Special Districts (the "Form 1098-F Filer") shall complete and file Form 1098-F with the Internal Revenue Service on or before February 28 (March 31 if filed electronically) of the year following the calendar year in which the order entering this Agreement becomes binding. On the Form 1098-F, the Form 1098-F Filer shall identify the entire Compensatory Restitution Amount received by the Form 1098-F Filer as remediation/restitution. The Form 1098-F Filer shall also, on or before January 31 of the year following the calendar year in which the order entering this Agreement becomes binding, furnish Copy B of such Form 1098-F (or an acceptable substitute statement) to Allergan.

IX. Participation by Subdivisions and Special Districts

A. *Notice.* No later than fifteen (15) days after the Preliminary Agreement Date, the Settling States, with the cooperation of Allergan, shall send individual written notice (which may be delivered via e-mail or other electronic means) of the opportunity to participate in this Agreement and the requirements of participation to all Subdivisions and Special Districts in the Settling State that are (1) Litigating Subdivisions or Litigating Special Districts, or (2) Non-Litigating Subdivisions listed in Exhibit G. To the extent a Non-Litigating Special District is entitled to an allocation for a direct payment through its inclusion in Exhibit G pursuant to a State-Subdivision Agreement, Allocation Statute, Statutory Trust, or voluntary redistribution, the Settling States shall also send individual written notice (which may be delivered via e-mail or other electronic means) of the opportunity to participate in this Agreement and the requirements of participation to such Special District. Unless otherwise agreed by the Parties, the version of Exhibit G used for notice shall be the one in place as of the Preliminary Agreement Date. Allergan's share of costs of the written notice shall be paid by Allergan as part of the Implementation Costs. Notice (which may be delivered via e-mail or other electronic means) shall also be provided simultaneously to counsel of record for Litigating Subdivisions, Litigating Special Districts, and known counsel for Non-Litigating Subdivisions listed on Exhibit G and Non-Litigating Special Districts listed on Exhibit G. The notice will include that the deadline for becoming an Initial Participating Subdivision or Initial Participating Special District is the Initial Participation Date. Nothing contained herein shall preclude a Settling State from providing further notice to or otherwise contacting any of its Subdivisions or Special Districts about becoming a Participating Subdivision or Participating Special District, including beginning any of the activities described in this paragraph prior to the Preliminary Agreement Date.

B. *Requirements for Becoming a Participating Subdivision: Non-Litigating Subdivisions*. A Non-Litigating Subdivision in a Settling State may become a Participating Subdivision by returning an executed Settlement Participation Form to the Implementation Administrator or Settlement Fund Administrator (which may be executed and returned by electronic means established by the Implementation Administrator or Settlement Fund Administrator) specifying (1) that the Subdivision agrees to the terms of this Agreement pertaining to Subdivisions, (2) that the Subdivision releases all Released Claims against all Released Entities, (3) that the Subdivision agrees to use monies it receives, if any, from the Settlement Fund pursuant to the applicable requirements of Section VIII, and (4) that the Subdivision submits to the jurisdiction of the Court where the Consent Judgment is filed for purposes limited to that Court's role under the Agreement. The required Settlement Participation Form is attached as Exhibit K. A Non-Litigating Subdivision will decide whether to become a Participating Subdivision for both this Agreement and the Teva Global Opioid Settlement Agreement, or neither. However, if Teva enters bankruptcy prior to the Effective Date, a Non-Litigating Subdivision can choose to only join this Agreement.

C. *Requirements for Becoming a Participating Subdivision: Litigating Subdivisions/Later Litigating Subdivisions*. A Litigating Subdivision or Later Litigating Subdivision in a Settling State may become a Participating Subdivision by returning an executed Settlement Participation Form to the Implementation Administrator or Settlement Fund Administrator (which may be executed and returned by electronic means established by the Implementation Administrator or Settlement Fund Administrator) that, in addition to the requirements set out in subsection IX.B for Non-Litigating Subdivisions, commits it to

promptly dismissal its legal action. The required Settlement Participation Form is attached as Exhibit K. A Litigating Subdivision or Later Litigating Subdivision will decide whether to become a Participating Subdivision for both this Agreement and the Teva Global Opioid Settlement Agreement, or neither. However, if Teva enters bankruptcy prior to the Effective Date, a Litigating Subdivision or Later Litigating Subdivision can choose to only join this Agreement. Except for trials begun before the Initial Participation Date, a Litigating Subdivision or a Later Litigating Subdivision may not become a Participating Subdivision after the completion of opening statements in a trial of a legal action it brought that includes a Released Claim against a Released Entity.

D. *Initial Participating Subdivisions.* A Subdivision qualifies as an Initial Participating Subdivision if it meets the applicable requirements for becoming a Participating Subdivision set forth in subsections IX.B or IX.C by the Initial Participation Date. Provided however, all Subdivision Settlement Participation Forms shall be held by the Implementation Administrator until Allergan provides the notice in subsection X.B that it intends to proceed with the settlement, at which time the obligations created by such forms become effective. If Allergan determines not to proceed, all Settlement Participation Forms shall be returned to Counsel for Litigating Subdivisions or to the Subdivisions not represented by counsel or destroyed to the extent that such destruction is not prohibited by then existing document preservation obligations.

E. *Later Participating Subdivisions.* A Subdivision that is not an Initial Participating Subdivision may become a Later Participating Subdivision by meeting the applicable requirements for becoming a Participating Subdivision after the Initial Participation Date and agreeing to be subject to the terms of a State-Subdivision Agreement (if any) or any other structure adopted or applicable pursuant to subsections VIII.E or VIII.F. The following provisions govern what a Later Participating Subdivision can receive (but do not apply to Initial Participating Subdivisions):

1. A Later Participating Subdivision shall not receive any share of any Base or Incentive Payments paid to the Subdivision Fund that were due before it became a Participating Subdivision.

2. A Later Participating Subdivision that becomes a Participating Subdivision after the Initial Participation Date but before June 15, 2023 shall receive 75% of the share of the Initial Year Payment that it would have received had it become an Initial Participating Subdivision (unless the Later Participating Subdivision is subject to subsections IX.E.3 or IX.E.4 below). A Later Participating Subdivision that becomes a Participating Subdivision after June 15, 2023 shall receive no share of the Initial Year Payment.

3. A Later Participating Subdivision that, after the Initial Participation Date, maintains a lawsuit for a Released Claim(s) against a Released Entity and has judgment entered against it on every such Claim before it became a Participating Subdivision (other than a consensual dismissal with prejudice) shall receive 50% of the share of future Base Payments or Incentive Payments that it would have received had it become a Later Participating Subdivision prior to such judgment; *provided,*

however, that if the Subdivision appeals the judgment and the judgment is affirmed with finality before the Subdivision becomes a Participating Subdivision, the Subdivision shall not receive any share of any Base Payments or Incentive Payments.

4. A Later Participating Subdivision that becomes a Participating Subdivision while a Bar or Case-Specific Resolution involving a different Subdivision exists in its State shall receive 25% of the share of future Base Payments or Incentive Payments that it would have received had it become a Later Participating Subdivision without such Bar or Case-Specific Resolution.

F. *No Increase in Payments*. Amounts to be received by Later Participating Subdivisions or Later Participating Special Districts shall not increase the payments due from Allergan.

G. *Ineligible Subdivisions and Special Districts.* Prior Settling Subdivisions and Subdivisions and Special Districts in Non-Settling States or Prior Settling States are not eligible to be Participating Subdivisions or Participating Special Districts.

H. *Non-Participating Subdivisions and Non-Participating Special Districts*. Non-Participating Subdivisions and Non-Participating Special Districts shall not directly receive any portion of any Base Payments or Incentive Payments, including from the State Fund and direct distributions from the Abatement Accounts Fund; however, a Settling State may choose to fund future Opioid Remediation that indirectly benefits Non-Participating Subdivisions and Non-Participating Special Districts.

I. *Unpaid Allocations to Later Participating and Non-Participating Subdivisions*. Any Base Payments and Incentive Payments allocated pursuant to subsection VII.E to a Later Participating or Non-Participating Subdivision or a Later Participating or Non-Participating Special District that cannot be paid pursuant to Section IX, will be allocated to the Abatement Accounts Fund for the Settling State in which the Subdivision is located, unless those payments are redirected elsewhere by a State-Subdivision Agreement or by a Statutory Trust.

J. *Requirements for Becoming a Participating Special District: Non-Litigating Special Districts*. A Non-Litigating Special District in a Settling State may become a Participating Special District by returning an executed Settlement Participation Form to the Implementation Administrator or Settlement Fund Administrator (which may be executed and returned by electronic means established by the Implementation Administrator or Settlement Fund Administrator) specifying (1) that the Special District agrees to the terms of this Agreement pertaining to Special Districts, (2) that the Special District releases all Released Claims against all Released Entities, (3) that the Special District agrees to use monies it receives, if any, from the Settlement Fund pursuant to the applicable requirements of Section VIII, and (4) that the Special District submits to the jurisdiction of the Court where the Consent Judgment is filed for purposes limited to that Court's role under the Agreement. The required Settlement Participation Form is attached as Exhibit K. A Non-Litigating Special District will decide whether to become a Participating Special District for both this Agreement and the Teva Global Opioid Settlement Agreement, or neither.

However, if Teva enters bankruptcy prior to the Effective Date, a Non-Litigating Special District can choose to only join this Agreement.

K. *Requirements for Becoming a Participating Special District: Litigating Special Districts/Later Litigating Special Districts.* A Litigating Special District or Later Litigating Special District in a Settling State may become a Participating Special District by returning an executed Settlement Participation Form to the Implementation Administrator or Settlement Fund Administrator (which may be executed and returned by electronic means established by the Implementation Administrator or Settlement Fund Administrator) that, in addition to the requirements set out in subsection IX.J for Non-Litigating Special Districts, commits it to promptly dismiss its legal action. The required Settlement Participation Form is attached as Exhibit K. A Litigating Special District or Later Litigating Special District will decide whether to become a Participating Special District for both this Agreement and the Teva Global Opioid Settlement Agreement, or neither. However, if Teva enters bankruptcy prior to the Effective Date, a Litigating Special District or Later Litigating Special District can choose to only join this Agreement. Except for trials begun before the Initial Participation Date, a Litigating Special District or a Later Litigating Special District may not become a Participating Special District after the completion of opening statements in a trial of a legal action it brought that includes a Released Claim against a Released Entity.

L. *Initial Participating Special Districts*. A Special District qualifies as an Initial Participating Special District if it meets the applicable requirements for becoming a Participating Special District set forth in subsections IX.J or IX.K by the Initial Participation Date. Provided however, all Special District Settlement Participation Forms shall be held by the Implementation Administrator until Allergan provides the notice in subsection X.B that it intends to proceed with the settlement, at which time the obligations created by such forms become effective.

M. *Later Participating Special Districts.* A Special District that is not an Initial Participating Special District may become a Later Participating Special District by meeting the applicable requirements for becoming a Participating Special District after the Initial Participation Date and agreeing to be subject to the terms of a State-Subdivision Agreement (if any) or any other structure adopted or applicable pursuant to subsections VIII.E or VIII.F. or any agreement reached by the applicable Settling State with Initial Participating Special Districts. The following provisions govern what a Later Participating Special District can receive (but do not apply to Initial Participating Special Districts):

1. Except for the Initial Year Payment, a Later Participating Special District shall not receive any share of any Base or Incentive Payments paid to the Subdivision Fund that were due before it became a Participating Special District.

2. A Later Participating Special District that becomes a Participating Special District after Initial Participation Date but before June 15, 2023 shall receive 75% of the share of the Initial Year Payment that it would have received had it become an Initial Participating Special District (unless the Later Participating Special District is subject to subsections IX.M.3 or IX.M.4 below). A Later Participating Special

District that becomes a Participating Special District after June 15, 2023 shall receive no share of the Initial Year Payment.

3. A Later Participating Special District that, after the Initial Participation Date, maintains a lawsuit for a Released Claim(s) against a Released Entity and has judgment entered against it on every such Claim before it became a Participating Special District (other than a consensual dismissal with prejudice) shall receive 50% of the share of future Base Payments or Incentive Payments that it would have received had it become a Later Participating Special District prior to such judgment; *provided, however*, that if the Special District appeals the judgment and the judgment is affirmed with finality before the Special District becomes a Participating Special District, the Special District shall not receive any share of any Base Payments or Incentive Payments.

4. A Later Participating Special District that becomes a Participating Special District while a Bar or Case-Specific Resolution involving a different Special District exists in its State shall receive 25% of the share of future Base Payments or Incentive Payments that it would have received had it become a Later Participating Special District without such Bar or Case-Specific Resolution.

X. Condition to Effectiveness of Agreement and Filing of Consent Judgment

A. *Determination to Proceed With Settlement.* Allergan will determine on or before the Reference Date whether there has been a sufficient resolution of the Claims of the Subdivisions and Special Districts in the Settling States (through participation under Section IX, Case-Specific Resolution(s), and Bar(s)) to proceed with this Agreement. The determination shall be in the sole discretion of Allergan, in good faith, and may be based on any criteria or factors deemed relevant by Allergan.

B. *Notice by Allergan*. On or before the Reference Date, Allergan shall inform the Settling States and MDL Plaintiffs' Executive Committee of its determination pursuant to subsection X.A. If Allergan determines to proceed, the Parties will proceed to file the Consent Judgments. If Allergan determines not to proceed, this Agreement will have no further effect and all releases (including those given by Participating Subdivisions and Participating Special Districts) and other commitments or obligations contained herein will be void and Settlement Participation Forms returned to the Subdivision or Special District or destroyed to the extent not prohibited by then existing legal obligations or document holds.

XI. Potential Payment Adjustments

A. *Settlement Class Resolution Opt Outs.* If a Settling State is eligible for Incentive A on the basis of a Settlement Class Resolution, and a Primary Subdivision that opted out of the Settlement Class Resolution maintains a lawsuit asserting a Released Claim against a Released Entity, the following shall apply. If the lawsuit asserting a Released Claim either survives a Threshold Motion or has an unresolved Threshold Motion fewer than sixty (60) days prior to the scheduled start of a trial involving a Released Claim, and is resolved with

finality on terms requiring payment by the Released Entity, Allergan shall receive a dollar-for-dollar offset for the amount paid against its obligation to make remaining Incentive A payments that would be apportioned to that State or Participating Subdivisions listed on Exhibit G.

B. *Revoked Bar, Settlement Class Resolution, or Case-Specific Resolution.*

1. If Allergan made a payment as a result of the existence of a Bar, Settlement Class Resolution, or Case-Specific Resolution in a Settling State, and that Bar, Settlement Class Resolution, or Case-Specific Resolution is subject to a Revocation Event, Allergan shall receive a dollar-for-dollar offset against its obligation to make remaining payments that would be apportioned to that State or Participating Subdivisions or Participating Special Districts listed on Exhibit G. This offset will be calculated as the dollar amount difference between (1) the total amount of Incentive Payments paid by Allergan during the time the Bar, Settlement Class Resolution, or Case-Specific Resolution subject to the Revocation Event was in effect, and (2) the total amount of Incentive Payments that would have been due from Allergan during that time without the Bar, Settlement Class Resolution, or Case-Specific Resolution subject to the Revocation Event being in effect. The amount of Incentive Payments that would have been due, referenced in (2) above, will be calculated based on considering any Subdivision or Special District that provides a release within one hundred eighty (180) days after the Revocation Event as having been a Participating Subdivision or Participating Special District (in addition to all other Participating Subdivisions and Participating Special Districts) during the time that the Bar, Settlement Class Resolution, or Case-Specific Resolution subject to the Revocation Event was in effect. If a Revocation Event causes a Settling State to no longer qualify for one or both parts of Incentive D, the Settling State and its Exhibit G participants shall return to Allergan all relevant payments made under Incentive D through offsets as set forth above.

2. Notwithstanding anything to the contrary in paragraph 1 above, if a Bar or Case-Specific Resolution is reinstated by the Settling State, either through the same or different means as the initial Bar or Case-Specific Resolution, Allergan's right to an offset is extinguished and any amounts withheld to offset amounts paid on account of the revoked, rescinded, reversed, or overruled Bar or Case-Specific Resolution shall be returned to the Settling State, less and except any Incentive Payments that would have been paid during the period in which the Bar or Case-Specific Resolution was revoked, rescinded, reversed, or overruled.

XII. Additional Restitution Amount

A. *Additional Restitution Amount*. Allergan shall pay an Additional Restitution Amount to each Settling State listed in Exhibit N in the amount and on the schedule set forth in Exhibit M. The maximum Additional Restitution Amount of $16,192,680.76 shall be reduced by the allocation set forth on Exhibit N for any Non-Settling States listed on Exhibit N. The Settlement Fund Administrator shall allocate such funds among and within the Settling

States listed in Exhibit N at the same time as its allocation of Annual Payments pursuant to Section VII.B.

B. Additional Restitution Amount funds shall not be subject to allocation as provided in Sections VIII.D through VIII.F

XIII. Plaintiffs' Attorneys' Fees and Costs

A. Attorneys' fees and costs are addressed in the following exhibits and are incorporated herein by reference:

1. The State Outside Counsel Fee Fund is addressed in Exhibit U.

2. The State Cost Fund is addressed in Exhibit S.

3. The Attorney Fee and Cost Fund is addressed and the Agreement on Attorneys' Fees, Expenses and Costs is set forth in Exhibit R.

XIV. Enforcement and Dispute Resolution

A. *Enforceability*. The terms of the Agreement and Consent Judgment applicable to or in a Settling State will be enforceable solely by that Settling State and Allergan. Settling States or Participating Subdivisions shall not have enforcement rights with respect either to the terms of this Agreement that apply only to or in other States or to any Consent Judgment entered into by another Settling State. Participating Subdivisions shall not have enforcement rights against Allergan with respect to the Agreement or any Consent Judgment except as to payments that would be allocated to the Subdivision Fund or Abatement Accounts Fund pursuant to Section VII; *provided, however*, that each Settling State shall allow Participating Subdivisions in that State to notify it of any perceived violations of the Agreement or Consent Judgment.

B. *Consent to Jurisdiction and Service of Process*. Allergan consents to the jurisdiction of the Court in which the Consent Judgment is filed, and any appellate court thereof, limited to resolution of disputes identified in subsection XIV.G.2; for a civil action for any appropriate relief to enforce compliance with the Parties' Agreement for Injunctive Relief pursuant to Exhibit P, Section K.5 herein; and for any proceedings for or related to the enforcement or collection of any payments on the Consent Judgment for resolution in the Court in which the Consent Judgment is filed. Allergan further agrees any service of process or notice required for such action or proceeding may be effectuated on Allergan through delivery of all required papers by hand or by a nationally recognized private courier on Allergan's representatives identified in Section XVI.P herein. To be clear, for the purposes of this Agreement only, Allergan consents to personal jurisdiction before such courts, and will not contend service must be effectuated through personal service of the Hague Convention process.

C. *Specific Terms Dispute Resolution.*

1. Any dispute that is addressed by the provisions set forth in the Injunctive Relief Terms in Exhibit P shall be resolved as provided therein and pursuant to Section VIII.E.3 herein.

2. In the event Allergan believes the 85% threshold established in subsection VIII.B is not being satisfied, any Party may request that Allergan and the Enforcement Committee meet and confer regarding the use of funds under subsection VIII.B. The completion of such meet-and-confer process is a precondition to further action regarding any such dispute. Further action concerning subsection VIII.B shall: (i) be limited to Allergan seeking to reduce its Annual Payments by no more than 5% of the difference between the actual amount of Opioid Remediation and the 85% threshold established in subsection VIII.B; (ii) only reduce Annual Payments to those Settling States and its Participating Subdivisions that are below the 85% threshold established in subsection VIII.B; and (iii) not reduce Annual Payments restricted to future Opioid Remediation.

D. *State-Subdivision Enforcement.*

1. A Participating Subdivision shall not have enforcement rights against a Settling State in which it is located with respect to the Agreement or any Consent Judgment except: (1) as provided for in a State-Subdivision Agreement, Allocation Statute, or Statutory Trust with respect to intrastate allocation; or (2) in the absence of a State-Subdivision Agreement, Allocation Statute, or Statutory Trust, as to allegations that: (a) the Settling State's use of Abatement Accounts Fund monies were not used for uses similar to or in the nature of those uses contained in Exhibit E; or (b) a Settling State failed to pay funds directly from the Abatement Accounts Fund to a Participating Subdivision eligible to receive a block grant pursuant to subsection VIII.F.2.b.

2. A Settling State shall have enforcement rights against a Participating Subdivision located in its territory: (1) as provided for in a State-Subdivision Agreement, Allocation Statute, or Statutory Trust; or (2) in the absence of a State-Subdivision Agreement, Allocation Statute, or Statutory Trust, as to allegations that the uses of Abatement Accounts Fund monies by Participating Subdivisions listed on Exhibit G were not for uses similar to or in the nature of those uses contained in Exhibit E.

3. As between Settling States and Participating Subdivisions, the above rights are contractual in nature and nothing herein is intended to limit, restrict, change, or alter any other existing rights under law.

E. *Enforcement Committee Actions to Enforce Agreement.*

1. The Parties agree that in the event of any failure by Allergan to make any required payments under this Agreement, the Enforcement Committee, on its own or through its designee such as a Settling State or Participating Subdivision acting by its authorization and on its behalf, shall have the ability and right to file an action or proceeding in any New York state court, or federal court of the United States of

America, sitting in New York, for or related to the enforcement or collection of such payments.

2. If any National Dispute involving a Settling State, Participating Subdivision, and/or Allergan is pending before a National Arbitration Panel concerning a given year's payment to all Settling States, any action or proceeding pursuant to this subsection XIV.E shall be stayed as to any disputed amounts only, but may proceed as to any and all undisputed amounts. In the event there is a dispute between the Parties as to the disputed amounts at issue, the Enforcement Committee or any party to that dispute may seek an expedited determination from the National Arbitration Panel for that proceeding as to the disputed and undisputed amounts.

3. The Parties further Agree that in the event of Allergan's breach of the Parties' Agreement for Injunctive Relief (Exhibit P attached hereto), the Enforcement Committee, on its own or through a single designee such as a Settling State shall have the ability and right to file a civil action pursuant to Exhibit P, after completing the processes laid out in Exhibit P, in any New York state court, or federal court of the United States of America, sitting in New York, seeking any appropriate relief to enforce compliance with such Agreement for Injunctive Relief.

4. Allergan and other Released Entities consent to the jurisdiction of the New York state court, or federal court of the United States of America, sitting in New York, and any appellate court from any thereof, in which any action or proceeding is initiated pursuant to this subsection XIV.E, and for enforcement or collection of any related judgment entered by such court. Allergan further agrees any service of process or notice required for such action or proceeding, including for any action or proceeding for enforcement or collection of any judgment entered thereon, may be effectuated on Allergan through delivery of all required papers by hand or by a nationally recognized private courier on Allergan's representatives identified in Section XVI.P herein. For the purposes of this Agreement only, Allergan consents to personal jurisdiction before such courts and will not contend service must be effectuated through personal service or the Hague Convention process.

5. The enforcement rights under this subsection XIV.E are in addition to, and not in lieu of, any other enforcement and collection rights of the Parties herein, including but not limited to enforcement rights as to payments as allowed by subsection XV.A.

F. *Subdivision Payment Enforcement.* A Participating Subdivision shall have the same right as a Settling State pursuant to subsection XIV.G.4.a(iv) to seek resolution of any failure by Allergan to make its required Base Payments and/or Incentive Payments in a Payment Year.

G. *Other Dispute Resolution Terms.*

1. Except as provided in subsection VIII.C, the parties to a dispute shall promptly meet and confer in good faith to resolve any dispute prior to any filing or

presentation to the Court or National Arbitration Panel. If the parties cannot resolve the dispute informally, and unless otherwise agreed in writing, they shall follow the remaining provisions of this Section XIV to resolve the dispute.

2. Except as provided in subsections XIV.C and XIV.G.4, disputes not resolved informally shall be resolved in either the Court that entered the relevant Consent Judgment or, if no Consent Judgment was entered, a state or territorial court with jurisdiction located wherever the seat of state government is located. State court proceedings shall be governed by the rules and procedures of the forum. For the avoidance of doubt, disputes to be resolved in state court include, but are not limited to, the following:

   a. disputes concerning whether expenditures qualify for Opioid Remediation;

   b. disputes between a Settling State and Participating Subdivisions located in such Settling State as provided by subsection XIV.D, except to the extent the State-Subdivision Agreement provides for other dispute resolution mechanisms. For the avoidance of doubt, disputes between a Settling State and any Participating Subdivision shall not be considered National Disputes;

   c. whether this Agreement and relevant Consent Judgment are binding under state law;

   d. the extent of the Attorney General's or other participating entity's authority under state law, including the extent of the authority to release Claims;

   e. whether the requirements of a Bar, a Case-Specific Resolution, State-Specific Finality, Later Litigating Subdivision, Litigating Subdivision, or a Threshold Motion have been met; and

   f. all other disputes not specifically identified in subsections XIV.C and XIV.G.4.

3. Any Party may request that the National Arbitration Panel provide an interpretation of any provision of the settlement that is relevant to the state court determination, and the National Arbitration Panel shall make reasonable best efforts to supply such interpretation within the earlier of thirty (30) days or the time period required by the state court proceedings. Any Party may submit that interpretation to the state court to the extent permitted by, and for such weight provided by, the state court's rules and procedures. If requested by a Party, the National Arbitration Panel shall request that its interpretation be accepted in the form of an amicus curiae brief, and any attorneys' fees and costs for preparing any such filing shall be paid for by the requesting Party.

4. National Disputes involving a Settling State, Participating Subdivision, and/or Allergan shall be resolved by a National Arbitration Panel.

a. "*National Disputes*" are disputes that are exceptions to subsection XIV.G.2's presumption of resolution in state courts because they involve issues of interpretation of Agreement terms applicable to all Settling States without reference to a particular State's law. Disputes between a State and any Participating Subdivisions shall not be considered National Disputes. National Disputes are limited to the following:

(i) the amount of offset and/or credit attributable to Non-Settling States;

(ii) issues involving the scope and definition of "Product";

(iii) interpretation and application of the terms "Covered Conduct" and "Released Entities";

(iv) disputes over a given year's Annual Payment or the payment of the Additional Restitution Amount to all Settling States (for the avoidance of doubt, disputes between a Settling State and Allergan over the amounts owed to only that State shall not be considered National Disputes);

(v) questions regarding the performance and/or removal of the Settlement Fund Administrator;

(vi) disputes involving liability of successor entities;

(vii) disputes that require a determination of sufficient Subdivision and Special District participation to qualify for Incentives A, B, C, or D,;

(viii) disputes that require interpretation of Agreement terms (i) that concretely affect four (4) or more Settling States; and (ii) do not turn on unique definitions and interpretations under State law; and

(ix) any dispute subject to resolution under subsection XIV.G.2 but for which all parties to the dispute agree to arbitration before the National Arbitration Panel under the provisions of this subsection XIV.G.4.

b. The "*National Arbitration Panel*" shall be comprised of three (3) neutral arbitrators. One (1) arbitrator shall be chosen by Allergan, one (1) arbitrator shall be chosen by the Enforcement Committee with due input from Participating Subdivisions, and the third arbitrator shall be agreed upon by the first two (2) arbitrators. The membership of the National Arbitration Panel is intended to remain constant throughout the term of this Agreement, but in the event that replacements are required, the retiring arbitrator shall be replaced by the party that selected him/her.

(i) The National Arbitration Panel shall make reasonable best efforts to decide all matters within one hundred eighty (180) days of filing, and in no event shall it take longer than one (1) year.

(ii) The National Arbitration Panel shall conduct all proceedings in a reasonably streamlined process consistent with an opportunity for the parties to be heard. Issues shall be resolved without the need for live witnesses where feasible, and with a presumption in favor of remote participation to minimize the burdens on the parties.

(iii) To the extent allowed under state law, a Settling State, Participating Subdivision, and (at any party's request) the National Arbitration Panel may certify to an appropriate state court any question of state law. The National Arbitration Panel shall be bound by a final state court determination of such a certified question. The time period for the arbitration shall be tolled during the course of the certification process.

(iv) The arbitrators will give due deference to any authoritative interpretation of state law, including any declaratory judgment or similar relief obtained by a Settling State, Participating Subdivision, or Allergan on a state law issue.

(v) The decisions of the National Arbitration Panel shall be binding on Settling States, Participating Subdivisions, Allergan, and the Settlement Fund Administrator. In any proceeding before the National Arbitration Panel involving a dispute between a Settling State and Allergan whose resolution could prejudice the rights of a Participating Subdivision(s) or Participating Special District(s) in that Settling State, such Participating Subdivision(s) or Participating Special District(s) shall be allowed to file a statement of view in the proceeding.

c. Nothing herein shall be construed so as to limit or otherwise restrict a State from seeking injunctive or other equitable relief in state court to protect the health, safety, or welfare of its citizens.

d. Each party shall bear its own costs in any arbitration or court proceeding arising under this subsection XIV.G. The costs for the arbitrators on the National Arbitration Panel shall be divided and paid equally by the disputing sides for each individual dispute, *e.g.*, a dispute between Allergan and Settling States/Participating Subdivisions shall be split 50% by Allergan and 50% by the Settling States/Participating Subdivisions that are parties to the dispute; a dispute between a Settling State and a Participating Subdivision shall be split 50% by the Settling State and 50% by any Participating Subdivisions that are party to the dispute.

5. Prior to initiating an action to enforce pursuant to this subsection XIV.G, the complaining party must:

   a. Provide written notice to the Enforcement Committee of its complaint, including the provision of the Consent Judgment and/or Agreement that the practice appears to violate, as well as the basis for its interpretation of the disputed provision. The Enforcement Committee shall establish a reasonable process and timeline for obtaining additional information from the involved parties; *provided, however*, that the date the Enforcement Committee establishes for obtaining additional information from the parties shall not be more than forty-five (45) days following the notice. The Enforcement Committee may advise the involved parties of its views on the complaint and/or seek to resolve the complaint informally.

   b. Wait to commence any enforcement action until thirty (30) days after the date that the Enforcement Committee establishes for obtaining additional information from the involved parties.

6. If the parties to a dispute cannot agree on the proper forum for resolution of the dispute under the provisions of subsections XIV.G.2 or XIV.G.4, a committee comprising the Enforcement Committee and sufficient representatives of Allergan such that the members of the Enforcement Committee have a majority of one (1) member will determine the forum where the dispute will be initiated within twenty-eight (28) days of receiving notification of the dispute relating to the proper forum. The forum identified by such committee shall be the sole forum for determining where the dispute shall be heard, and the committee's identification of such forum shall not be entitled to deference by the forum selected.

H. *No Effect*. Nothing in this Agreement shall be interpreted to limit the Settling State's Civil Investigative Demand ("CID") or investigative subpoena authority, to the extent such authority exists under applicable state law and the CID or investigative subpoena is issued pursuant to such authority, and Allergan reserves all of its rights in connection with a CID or investigative subpoena issued pursuant to such authority.

XV. Judgment and Settlement Set-Off Related to Teva

A. The Parties recognize that some of the Settling States, Participating Subdivisions, and Participating Special Districts are pursuing Claims against Teva Ltd., Teva USA, Cephalon, Divested Actavis Generic Entities, and/or other Divested Entities, and/or each of their respective parents, subsidiaries, and/or affiliates. If any of them achieves a judgment by verdict, judicial decision, or means other than settlement against any of Teva Ltd., Teva USA, Cephalon, Divested Actavis Generic Entities, and/or other Divested Entities, and/or each of their respective parents, subsidiaries, and/or affiliates, each plaintiff listed above shall represent and agree that any payment(s) that the Settling States, Participating Subdivisions, and Participating Special Districts or their counsel receives from Teva Ltd., Teva USA, Cephalon, Divested Actavis Generic Entities, and/or other Divested Entities, and/or each of their respective parents, subsidiaries, and/or affiliates

reflects the amount over and above 56% of the amount they or their counsel received from the Global Settlement Amount due under this Agreement that each and all of them deem to reflect a fair overall settlement value for liability attributable to the generic opioid drugs that are Products distributed and/or sold before August 2, 2016 by Divested Actavis Generic Entities and/or other Divested Entities and/or attributable to the operation of the Divested Actavis Generic Entities and/or other Divested Entities related to those generic opioid drugs that are Products before August 2, 2016.

B. The Settling States, Participating Subdivisions, and Participating Special Districts may reach a settlement agreement with Teva Ltd., Teva USA, Cephalon, Divested Actavis Generic Entities, and/or other Divested Entities, and/or each of their respective parents, subsidiaries, and/or affiliates that resolves some or all of their respective Claims. In that event, the Releasors represent and agree that any payment(s) that the Settling States, Participating Subdivisions, and Participating Special Districts or their counsel receives from Teva Ltd., Teva USA, Cephalon, Divested Actavis Generic Entities, and/or other Divested Entities, and/or each of their respective parents, subsidiaries, and/or affiliates reflects the amount over and above 56% of the amount they or they counsel received from the Global Settlement Amount due under this Agreement that each and all of them deem to reflect a fair overall settlement value for liability attributable to the generic opioid drugs that are Products distributed and/or sold before August 2, 2016 by Divested Actavis Generic Entities and/or other Divested Entities and/or attributable to the operation of the Divested Actavis Generic Entities and/or other Divested Entities related to those generic opioid drugs that are Products before August 2, 2016. In any such settlement agreement with Teva Ltd., Teva USA, Cephalon, Divested Actavis Generic Entities, and/or other Divested Entities, and/or each of their respective parents, subsidiaries, and/or affiliates, the Settling States, Participating Subdivisions, and Participating Special Districts agree that the agreed settlement amount reflects the value the parties to the agreement deem a fair settlement value over and above the payments made or due to be paid under the Allergan Public Global Opioid Settlement Agreement for generic opioid drugs that are Products distributed and/or sold before August 2, 2016 by Divested Actavis Generic Entities and/or other Divested Entities and/or relate to the operation of Divested Actavis Generic Entities and other Divested Entities related to those generic opioid drugs that are Products before August 2, 2016.

XVI. Miscellaneous

A. *No Admission.* Allergan does not admit liability or wrongdoing. Neither this Agreement nor the Consent Judgments shall be considered, construed, or represented to be (1) an admission, concession, or evidence of liability or wrongdoing or (2) a waiver or any limitation of any defense otherwise available to Allergan.

B. *Population of Subdivisions*. The population figures for Subdivisions shall be the published U.S. Census Bureau's population estimates for July 1, 2019, released May 2020. These population figures shall remain unchanged during the term of this Agreement.

C. *Population of Special Districts*. For any purpose in this Agreement in which the population of a Special District is used: (a) School Districts' population will be measured by the

number of students enrolled who are eligible under the Individuals with Disabilities Education Act ("*IDEA*") or Section 504 of the Rehabilitation Act of 1973; (b) Health Districts' and Hospital Districts' population will be measured at 25% of discharges; and (c) all other Special Districts' (including Fire Districts' and Library Districts') population will be measured at 10% of the population served.

D. *Population Associated with Sheriffs*. For any purpose in this Agreement in which the population associated with a lawsuit by a sheriff is used, the population will be measured at 20% of the capacity of the jail(s) operated by the sheriff.

E. *Most-Favored-Nation Provision*.

1. If Allergan enters into any settlement agreement with any Non-Settling State after November 23, 2022 that resolves Claims similar in scope to the Claims released by a Settling State under this Agreement on overall payment terms that are more favorable to such Non-Settling State on a net present value basis (calculated with a 7% discount rate) on overall payment terms the Non-Settling State would have received under this Agreement based on the same level of participation, then the Settling States, individually or collectively, may elect to seek review, pursuant to Section XVI.E.3, of the overall payment terms of this Agreement and the Non-Settling State agreement so that the Settling State(s) may obtain, with respect to Allergan, overall payment terms at least as favorable as those obtained by such Non-Settling State. "*Overall payment terms*" refers to consideration of all payment terms of the two agreements, taken together, including, but not limited to the amount of payments, the timing of payments, and conditions or contingencies on payments.

2. For any settlement with a Non-Settling State involving Released Claims, Allergan shall provide the Enforcement Committee with a copy of the settlement agreement or relevant Consent Judgment within thirty (30) calendar days of the consummation of such settlement. The Enforcement Committee will promptly distribute such copy to all Settling States.

3. In the event that one or more Settling State(s) believes that the overall payment terms of an agreement by Allergan with a Non-Settling State are more favorable to the Non-Settling State, when compared based on the totality of the considerations set forth in Section XVI.E.1, the Settling State(s) and Allergan shall engage in the following process:

    a. The Settling State(s) shall provide notice, within sixty (60) calendar days of the date on which a settlement agreement or Consent Judgment is provided to the Enforcement Committee, to Allergan of its intent to seek revision of this Agreement to provide payment terms that are, on an overall basis, as favorable as those obtained by the Non-Settling State. Such notice shall be confidential and not disclosed publicly to the extent allowed by law and shall state, in detail, the basis for the Settling State's belief that it is entitled to a revision of the Agreement.

b. Allergan shall, within thirty (30) calendar days, provide a response to the Settling State(s), explaining its position, in detail, as to whether the Settling State(s) is entitled to more favorable overall payment terms than those provided for in this Agreement.

c. In the event the Settling State(s) and Allergan do not reach agreement as to the application of Section XVI.E.1, the Settling State(s) may petition the National Arbitration Panel to seek a ruling from the Panel as to the applicability of Section XVI.E.1, provided that the Settling State(s) may seek such review only if at least five (5) Settling States co-sign the petition. The Panel shall consider submissions and argument by the parties pursuant to the procedures set forth in Section XIV.G.4.

d. The Settling State(s) and Allergan shall be bound by the determination of the National Arbitration Panel.

4. This Section XVI.E does not apply to, and there is no ability of any Settling State to seek or obtain revision of this Agreement based on, any Non-Settling State agreement with Allergan that is entered into: (a) either the earlier of (i) after the close of expert discovery or (ii) after a date ninety (90) calendar days prior to the scheduled start date of a trial between Allergan and the Non-Settling State or any severed or bifurcated portion thereof, provided that, where, in order to complete a settlement, a Non-Settling State and Allergan jointly request an adjournment of the scheduled start date of a trial within ninety (90) days of that date, this exception will apply as if the trial date had not been adjourned; (b) with a Non-Settling State that previously litigated to judgment a case related to opioids against any manufacturer, distributor, or pharmacy; or (c) the earlier of (i) after a Non-Settling State has obtained any court order or judicial determination that grants judgment (in whole or in part) against Allergan in the Non-Settling State's case, (ii) after a sanctions ruling against Allergan in the Non-Settling State's case against Allergan; or (iii) after any ruling has issued in the Non-Settling State's case against any manufacturer, distributor, or pharmacy on the issue of joint and several liability. The National Arbitration Panel shall have no power to review agreements that satisfy any of the conditions described in this paragraph.

5. This Section does not apply to, and there is no ability of any Settling State to seek or obtain revision of this Agreement based on, any agreement between Allergan and (a) federally-recognized tribe(s),(b) Non-Participating Subdivisions or (3) Non-Participating Special Districts. This Section XVI.E will not apply to any agreement entered into more than six (6) months after the Reference Date.

F. *Tax Reporting and Cooperation*.

1. The Parties agree that, unless otherwise required by law, Allergan's payment of the Compensatory Restitution Amount (after all applicable offsets) payable by Allergan shall be directed to Opioid Remediation for restitution of Alleged Harms allegedly caused by Allergan. By executing this Agreement (or the Settlement

Participation Form and thereby becoming a signatory to this Agreement), each Settling State, Participating Subdivision, and Participating Special District certify that: (1) the entity suffered Alleged Harms allegedly caused by Allergan; (2) the Compensatory Restitution Amount to be paid by Allergan to the entity represent an amount that is less than or equal to the actual monetary damage allegedly caused by Allergan; and (3) the entity shall use such payments for the sole purpose of Opioid Remediation.

2. Upon request by Allergan, the Settling States, Participating Subdivisions, and Participating Special Districts agree to perform such further acts and to execute and deliver such further documents as may be reasonably necessary for Allergan to establish the statements set forth in subsection VIII.G to the satisfaction of their tax advisors, their independent financial auditors, the Internal Revenue Service, or any other governmental authority, including as contemplated by Treasury Regulations Section 1.162-21(b)(3)(ii) and any subsequently proposed or finalized relevant regulations or administrative guidance.

3. Without limiting the generality of subsection XVI.F, each Settling State, Participating Subdivision, and Participating Special District shall cooperate in good faith with Allergan with respect to any tax claim, dispute, investigation, audit, examination, contest, litigation, or other proceeding relating to this Agreement.

4. The Designated State, on behalf of all Settling States, Participating Subdivisions, and Participating Special Districts, shall designate one of its officers or employees to act as the "appropriate official" within the meaning of Treasury Regulations Section 1.6050X-1(f)(1)(ii)(B) (the "Appropriate Official").

5. Neither Allergan nor the Settling States, Participating Subdivisions, and Participating Special Districts make any warranty or representation to any Settling jurisdiction or Releasor as to the tax consequences of the payment of the Compensatory Restitution Amount (or any portion thereof).

G. *No Third-Party Beneficiaries.* Except as expressly provided in this Agreement, no portion of this Agreement shall provide any rights to, or be enforceable by, any person or entity that is not a Settling State or Released Entity. No Settling State may assign or otherwise convey any right to enforce any provision of this Agreement.

H. *Calculation*. Any figure or percentage referred to in this Agreement shall be carried to seven decimal places.

I. *Construction*. None of the Parties and no Participating Subdivision shall be considered to be the drafter of this Agreement or of any of its provisions for the purpose of any statute, case law, or rule of interpretation or construction that would or might cause any provision to be construed against the drafter of this Agreement. The headings of the provisions of this Agreement are not binding and are for reference only and do not limit, expand, or otherwise affect the contents or meaning of this Agreement.

J. *Cooperation*. Each Party and each Participating Subdivision agrees to use its best efforts and to cooperate with the other Parties and Participating Subdivisions to cause this Agreement and the Consent Judgments to become effective, to obtain all necessary approvals, consents and authorizations, if any, and to execute all documents and to take such other action as may be appropriate in connection herewith. Consistent with the foregoing, each Party and each Participating Subdivision agrees that it will not directly or indirectly assist or encourage any challenge to this Agreement or any Consent Judgment by any other person, and will support the integrity and enforcement of the terms of this Agreement and the Consent Judgments.

K. *Entire Agreement*. This Agreement, its exhibits and any other attachments, including the attorneys' fees and cost agreement in Exhibit R, embodies the entire agreement and understanding between and among the Parties and Participating Subdivisions relating to the subject matter hereof and supersedes (1) all prior agreements and understandings relating to such subject matter, whether written or oral and (2) all purportedly contemporaneous oral agreements and understandings relating to such subject matter.

L. *Execution*. This Agreement may be executed in counterparts and by different signatories on separate counterparts, each of which shall be deemed an original, but all of which shall together be one and the same Agreement. One or more counterparts of this Agreement may be delivered by facsimile or electronic transmission with the intent that it or they shall constitute an original counterpart hereof. One or more counterparts of this Agreement may be signed by electronic signature.

M. *Good Faith and Voluntary Entry*. Each Party warrants and represents that it negotiated the terms of this Agreement in good faith. Each of the Parties and signatories to this Agreement warrants and represents that it freely and voluntarily entered into this Agreement without any degree of duress or compulsion. The Parties state that no promise of any kind or nature whatsoever (other than the written terms of this Agreement) was made to them to induce them to enter into this Agreement.

N. *No Prevailing Party.* The Parties each agree that they are not the prevailing party in this action, for purposes of any Claim for fees, costs, or expenses as prevailing parties arising under common law or under the terms of any statute, because the Parties have reached a good faith settlement. The Parties each further waive any right to challenge or contest the validity of this Agreement on any ground, including, without limitation, that any term is unconstitutional or is preempted by, or in conflict with, any current or future law.

O. *Non-Admissibility.* The settlement negotiations resulting in this Agreement have been undertaken by the Parties and by certain representatives of the Participating Subdivisions in good faith and for settlement purposes only, and no evidence of negotiations or discussions underlying this Agreement shall be offered or received in evidence in any action or proceeding for any purpose. This Agreement shall not be offered or received in evidence in any action or proceeding for any purpose other than in an action or proceeding arising under or relating to this Agreement or in any litigation or arbitration concerning Allergan's right to coverage under an insurance contract.

P. *Notices.* All notices or other communications under this Agreement shall be in writing (including but not limited to electronic communications) and shall be given to the recipients indicated below:

1. For the Attorney(s) General:

Josh Stein, Attorney General
North Carolina Department of Justice
Attn: Daniel Mosteller
PO Box 629
Raleigh, NC 27602
Dmosteller@ncdoj.gov

Tom Miller, Attorney General
Office of the Attorney General of Iowa
Attn: Nathan Blake
1305 E. Walnut St.
Des Moines, IA 50319

Jonathan Skrmetti, Attorney General
Office of the Tennessee Attorney General
Attn: Michael Leftwich
P.O. Box 20207
Nashville, TN, 37202-0207

2. For the Plaintiffs' Executive Committee:

Paul F. Farrell
Farrell Law
P.O. Box 1180
Huntington, WV 25714-1180

Jayne Conroy
Simmons Hanly Conroy LLC
112 Madison Avenue, 7th Floor
New York, NY 10016-7416
JConroy@simmonsfirm.com

Joseph F. Rice
Motley Rice LLC
28 Bridgeside Blvd.
Mount Pleasant, SC 29464
jrice@motleyrice.com

Peter Mougey
Levin Papantonio Rafferty

316 South Baylen St.
Pensacola, FL 32502
pmougey@levinlaw.com

Paul J. Geller
Robbins Geller Rudman & Dowd LLP
120 East Palmetto Park Road
Boca Raton, FL 33432
PGeller@rgrdlaw.com

Steven Skikos
Skikos, Crawford, Skikos & Joseph, LLC
One Sansom Street, Suite 2830
San Francisco, CA 94104
sskikos@skikos.com

3. For Allergan:

Office of General Counsel
One North Waukegan Road
North Chicago, IL 60064

Copy to Allergan's attorneys at:

James F. Hurst, P.C.
Kirkland & Ellis LLP
300 North LaSalle
Chicago, IL 60654
james.hurst@kirkland.com

Any Party or the Plaintiffs' Executive Committee may change or add the contact information of the persons designated to receive notice on its behalf by notice given (effective upon the giving of such notice) as provided in this subsection.

Q. *No Waiver*. The waiver of any rights conferred hereunder shall be effective only if made by written instrument executed by the waiving Party or Parties. The waiver by any Party of any breach of this Agreement shall not be deemed to be or construed as a waiver of any other breach, whether prior, subsequent, or contemporaneous, nor shall such waiver be deemed to be or construed as a waiver by any other Party.

R. *Preservation of Privilege.* Nothing contained in this Agreement or any Consent Judgment, and no act required to be performed pursuant to this Agreement or any Consent Judgment, is intended to constitute, cause, or effect any waiver (in whole or in part) of any attorney-client privilege, work product protection, or common interest/joint defense privilege, and each Party agrees that it shall not make or cause to be made in any forum any assertion to the contrary.

S. *Successors*

1. The Agreement shall be binding upon, and insure to the benefit of, Allergan and its respective successors and assigns.

2. Prior to Allergan's last Payment Date, Allergan shall not sell the majority of its voting stock or substantially all its assets without obtaining the acquiror's agreement that it will constitute a successor with respect to Allergan's obligations under this Agreement.

3. Prior to Allergan's last Payment Date, Allergan shall not in one (1) transaction, or a series of related transactions, sell, or transfer assets (other than sales or transfers of inventories, or sales or transfers to an entity owed directly or indirectly by Allergan) having a fair market value equal to twenty-five percent (25%) or more of the consolidated assets of Allergan where the sale or transfer transaction is announced after the Reference Date, is not for fair consideration, and would foreseeably and unreasonably jeopardize Allergan's ability to make the payments under this Agreement that are due on or before the third Payment Date following the close of a sale or transfer transaction. The above restriction shall not apply if Allergan obtains the acquiror's agreement that it will be either a guarantor of or successor to the percentage of Allergan's remaining Payment Obligations under this Agreement equal to the percentage of Allergan's consolidated assets being sold or transferred in such transaction. Percentages under this section shall be determined in accordance with the United States generally accepted accounting principles and as of the date of Allergan's most recent publicly filed consolidated balance sheet prior to the date of entry into the sale or transfer agreement at issue. This Section XVI.S.3 shall be enforceable solely by the Enforcement Committee, and any objection under this Section X.VI.S.3 not raised within twenty (20) calendar days from the date that Allergan transmits notice of the transaction to the Enforcement Committee is waived. Any dispute under this Section XVI.S.3 shall be a National Dispute as described in Section XIV.G and must be raised exclusively with the National Arbitration Panel as described therein within twenty (20) calendar days of the announcement, and the sole remedy shall be an order enjoining the transaction.

T. *Modification, Amendment, Alteration*. After the Reference Date, any modification, amendment, or alteration of this Agreement by the Parties shall be binding only if evidenced in writing signed by Allergan along with the signatures of at least thirty-seven (37) of those then-serving Attorneys General of the Settling States along with a representation from each Attorney General that either: (1) the advisory committee or similar entity established or recognized by that Settling State (either pursuant to subsection VIII.F.2, by a State-Subdivision Agreement, or by statute) voted in favor of the modification, amendment, or alteration of this Agreement including at least one Participating Subdivision-appointed member; or (2) in States without any advisory committee, that 50.1% of the Participating Subdivisions by population expressed approval of the modification, amendment, or alteration of this Agreement in writing. Provided, however, in the event the modification, amendment, or alteration relates to injunctive relief, interstate allocation between the Settling States, intrastate allocation in a particular Settling State, or fees or costs of Settling States and Participating Subdivisions, then every Settling

State and each Participating Subdivision affected by that modification, amendment, or alteration must assent in writing. Provided further that, in the event the modification, amendment, or alteration relates to injunctive relief, then such amendment, modification, or alteration of injunctive relief against Allergan will not be effective unless and until any Consent Judgment is modified by a court of competent jurisdiction, except as otherwise provided by the Injunctive Terms.

U. *Termination.*

1. Unless otherwise agreed to by Allergan and the Settling State in question, this Agreement and all of its terms (except subsection XVI.O and any other non-admissibility provisions, which shall continue in full force and effect) shall be canceled and terminated with respect to the Settling State, and the Agreement and all orders issued by the courts in the Settling State pursuant to the Agreement shall become null and void and of no effect if one or more of the following conditions applies:

    a. A Consent Judgment approving this Agreement without modification of any of the Agreement's terms has not been entered as to the Settling State by a court of competent jurisdiction on or before one hundred eighty (180) days after the Effective Date; or

    b. This Agreement or the Consent Judgment as to that Settling State has been disapproved by a court of competent jurisdiction to which it was presented for approval and/or entry (or, in the event of an appeal from or review of a decision of such a court to approve this Agreement and the Consent Judgment, by the court hearing such appeal or conducting such review), and the time to appeal from such disapproval has expired, or, in the event of an appeal from such disapproval, the appeal has been dismissed or the disapproval has been affirmed by the court of last resort to which such appeal has been taken and such dismissal or disapproval has become no longer subject to further appeal (including, without limitation, review by the United States Supreme Court).

2. If this Agreement is terminated with respect to a Settling State and its Participating Subdivisions for whatever reason pursuant to subsection XVI.U.1, then:

    a. An applicable statute of limitation or any similar time requirement (excluding any statute of repose) shall be tolled from the date the Settling State signed this Agreement until the later of the time permitted by applicable law or for one year from the date of such termination, with the effect that Allergan and the Settling State in question shall be in the same position with respect to the statute of limitation as they were at the time the Settling State filed its action; and

    b. Allergan and the Settling State and its Participating Subdivisions in question shall jointly move the relevant court of competent jurisdiction for an order

reinstating the actions and Claims dismissed pursuant to the terms of this Agreement governing dismissal, with the effect that Allergan and the Settling State and its Participating Subdivisions in question shall be in the same position with respect to those actions and Claims as they were at the time the action or Claim was stayed or dismissed.

3. Unless Allergan and the Enforcement Committee agree otherwise, this Agreement, with the exception of the Injunctive Relief Terms that have their own provisions on duration, shall terminate as to all Parties as of Annual Payment 6, *provided* that Allergan has performed its payment obligations under the Agreement as of that date. Notwithstanding any other provision in this Agreement, all releases under this Agreement will remain effective despite any termination under this paragraph.

V. *Waiver.* Allergan, for good and valuable consideration the receipt of which is acknowledged, hereby (a) waives, foregoes and relinquishes all rights to utilize and/or seek relief under any of the following laws of the State of Texas for the restructuring of its debts or liabilities related to Released Claims or Claims that would have been Released Claims if they had been brought by a Releasor against a Released Entity before the Effective Date, or this Agreement: Tex. Bus. Orgs. Code § 10.003 (Contents of Plan of Merger: More Than One Successor) or any other statute of Subchapter A of Chapter 10 of Tex. Bus. Orgs. Code to the extent such statute relates to multi-successor or divisive mergers (and/or any other similar laws or statutes in any other state or territory); Tex. Bus. Orgs. Code §§ 11.01–11.414 (Winding Up and Termination of Domestic Entity); or Tex. Bus. & Com. Code §§ 23.01–23.33 (Assignments for the Benefit of Creditors) (collectively, the "Texas Statutes"), and (b) agrees, warrants and represents that it will not file, request or petition for relief under the Texas Statutes related to its debts or liabilities related to Released Claims or Claims that would have been Released Claims if they had been brought by a Releasor against a Released Entity before the Effective Date, or this Agreement, in each case until such time as all of Allergan's payment obligations incurred hereunder are satisfied in full. The foregoing waiver and relinquishment includes, without limitation, until such time as all of Allergan's payment obligations hereunder are satisfied in full, Allergan's rights to execute a divisional merger or equivalent transaction or restructuring related to its debts or liabilities related to Released Claims or Claims that would have been Released Claims if they had been brought by a Releasor against a Released Entity before the Effective Date, or this Agreement that in each case has the intent or foreseeable effect of (i) separating material assets from material liabilities and (ii) assigning or allocating all or a substantial portion of those liabilities to any subsidiary or affiliate that files for relief under chapter 11 of the Bankruptcy Code, or pursuant to which such subsidiary or affiliate that files for relief under chapter 11 of the Bankruptcy Code would be assuming or retaining all or a substantial portion of those liabilities.

W. *Governing Law.* Except (1) as otherwise provided in the Agreement or (2) as necessary, in the sole judgment of the National Arbitration Panel, to promote uniformity of interpretation for matters within the scope of the National Arbitration Panel's authority, this Agreement shall be governed by and interpreted in accordance with the respective laws of the Settling State, without regard to the conflict of law rules of such Settling State, that is seeking to enforce the Agreement against Allergan or against which Allergan is seeking enforcement.

Notwithstanding any other provision in this subsection on governing law, any disputes relating to the Settlement Fund Escrow shall be governed by and interpreted in accordance with the law of the state where the escrow agent has its primary place of business.

ALLERGAN PUBLIC GLOBAL OPIOID SETTLEMENT EXHIBITS

EXHIBIT A Alleged Harms **A-1**

EXHIBIT B Enforcement Committee Organizational Bylaws **B-1**

EXHIBIT C Litigating Subdivisions and Special Districts List **C-1**

EXHIBIT D [Intentionally Omitted] **D-1**

EXHIBIT E List of Opioid Remediation Uses **E-1**

EXHIBIT F-1 List of States and Pre-Credit Overall Allocation Percentages **F-1**

EXHIBIT F-2 List of Eligible Settling States and Overall Allocation Percentages **F-3**

EXHIBIT G Subdivisions and Special Districts Eligible to Receive Direct Allocations from the Subdivision Fund and Subdivision Fund Allocation Percentages **G-1**

EXHIBIT H [Intentionally Omitted] **H-1**

EXHIBIT I Subdivisions with a Population Greater than 10,000 ..... **I-1**

EXHIBIT J-1 AbbVie Entities **J-1**

EXHIBIT J-2 Allergan Entities **J-2**

EXHIBIT J-3 Divested Entities **J-3**

EXHIBIT K Subdivision and Special District Settlement Participation Form **K-1**

EXHIBIT L Settlement Fund Administrator **L-1**

EXHIBIT M-1 Payment Schedule **M-1**

EXHIBIT M-2 Payment Schedule for Fee Funds, Cost Funds, and Additional Restitution **M-2**

EXHIBIT N Additional Restitution Amount Allocation **N-1**

EXHIBIT O Adoption of a State-Subdivision Agreement **O-1**

EXHIBIT P Injunctive Relief **P-1**

EXHIBIT Q [Intentionally Omitted] **Q-1**

EXHIBIT R Agreement on Attorneys' Fees, Costs, and Expenses R-1

EXHIBIT S Agreement on the State Outside Counsel Fee Fund for Manufacturer Settlements S-1

EXHIBIT T Agreement on the State Cost Fund Administration T-1

EXHIBIT A
Alleged Harms

The following export reports that were filed in connection with the case captioned *In re National Prescription Opiate Litigation*, No. 1:17-md-02804 (N.D. Ohio):

1. Expert report of Professor David Cutler, dated March 25, 2019.

2. Expert report of Dr. Jeffrey B. Liebman, dated March 25, 2019.

3. Expert report of Professor Thomas McGuire regarding damages to Bellwethers, dated March 25, 2019.

4. Report of Professor Thomas McGuire regarding public nuisance, dated March 25, 2019.

EXHIBIT B
Enforcement Committee Organizational Bylaws

ARTICLE I

These bylaws constitute the code of rules adopted by the Settling States and Participating Subdivisions for the creation of an Enforcement Committee (the "Committee") to exist and operate during the term of the Agreement in connection with Allergan and shall control the regulation and management of the Committee's affairs.

ARTICLE II

Purpose

The Committee is organized for the sole purpose of evaluating and taking such action as deemed reasonable, necessary, and appropriate by the members of the Committee on the matters delegated to the Committee under that certain Settlement Agreement between the Settling States and Allergan, dated November ___, 2022.

ARTICLE III

Members of the Committee

(1) Number of Members

The Committee will consist of thirteen (13) members (the "Members"). Upon majority resolution of the Committee, the number of Members may be increased or decreased from time to time, but in no event shall a decrease have the effect of decreasing the total number of Members to less than seven Members.

(2) Initial Members

The Committee initially will consist of eight (8) Settling State Members and five (5) Participating Subdivision Members; two (2) of the Participating Subdivisions shall be counties and two (2) shall be municipalities, and the fifth Participating Subdivision member may be either a county or a municipality. The initial Settling State Members are representatives from: California, Illinois, Iowa, New York, North Carolina, Ohio, Tennessee, and Virginia. The initial Participating Subdivision Members are: [•]. Until the date fifteen (15) months from the Effective Date contained in the Settlement Agreement, the Participating Subdivisions may designate their outside counsel to serve as their representative. After the date fifteen (15) months from the Effective Date, an employee or official of the Participating Subdivision must be the designated as the representative of the Participating Subdivision.

(3) Term of Members

The term of office for Members of the Committee will be until the end of the term of the Settlement Agreement, six (6) years, unless and until a Member withdraws or resigns from the Committee.

(4) Resignation

Any Member may resign at any time by delivering written notice to the Chairperson of the Committee. Such resignation shall take effect upon receipt or, if later, at the time specified in the notice.

(5) Removal

(a) Any Member may be removed without cause, at any time, by a majority of the entire Committee, at a Regular or Special Meeting called for that purpose. Any Member under consideration of removal must first be notified about the consideration by written notice at least five days prior to the meeting at which the vote takes place.

(b) In the event that any Member is not a Settling State or a Participating Subdivision or the Member subsequently becomes a Later Litigating Subdivision, the Member shall be removed immediately without notice or vote of the Committee.

(6) Vacancies

In the event of a vacancy, the Members of the same type (Settling State or Participating Subdivision) shall select another Settling State or Participating Subdivision to fill that Member's position.

(7) Compensation

Members shall not receive any salaries or other compensation for their services, but, by resolution of the Committee, may be reimbursed for any actual expenses incurred in the performance of their duties for the Committee, as long as a majority of disinterested Members approve the reimbursement. Any reimbursement shall be sought from the Settlement Fund Administrator.

ARTICLE IV

Conflicts of Interest and Code of Ethics

If a Member, agent, or employee of the Committee has a conflict of interest, he or she may not participate in a vote, discussion, or decision about the matter. Each Member shall follow any applicable state or local law with respect to conflicts, gifts, and ethics.

ARTICLE V

Committee Meetings

(1) Place of Meetings

Meetings of the Committee will be held at any place that the Chairperson may designate, including by telephonic or electronic means.

(2) Regular Meetings

Regular meetings of the Committee shall be held as deemed necessary by the Chairperson or any three members.

(3) Notice of Meetings

Written notice of the date, time, place and subject of each meeting must be provided to the Members at least 72 hours before the scheduled time of the meeting, except when there is an emergency or urgent public necessity.

(4) Quorum

A majority of the incumbent Members (not counting vacancies) shall constitute a quorum for the purposes of convening a meeting or conducting business.

(5) Voting and Proxy

When it is necessary to vote on any matter before the Committee, Members may vote by electronic means as provided in these Bylaws. Proxy voting is permitted. In order for a matter to pass, the matter must have a majority vote of Members present and must have at least one vote from a Settling State Member and a Participating Subdivision Member. In the event that there is a Quorum, but no Settling State or Participating Subdivision Member is present, then a matter may pass with a simple majority vote.

(6) Minutes

The Committee shall prepare and keep minutes. The minutes must state the subject of each deliberation and indicate each vote, order, decision, or other action taken.

ARTICLE VI

Officers

(1) Roster of Officers

The Committee shall have a Chairperson, a Vice Chairperson, and a Secretary. The Committee may have at its discretion, such other officers as may be appointed by the Members of the Committee. One person may hold two or more offices, except those serving as Chairperson.

(2) Election and Removal of Officers

All officers shall serve two-year terms. The election shall be conducted at the first meeting of the fiscal year. Officers shall remain in office until their successors have been selected. Officers may serve consecutive terms without limit. The election of officers shall be by majority vote of the Members of the Committee attending the meeting.

(3) Vacancies

If a vacancy occurs during the term of office for any elected officer, the Members of the Committee shall elect a new officer to fill the remainder of the term as soon as practical, by majority vote of Members present.

(4) Chairperson

The Chairperson will supervise and control the affairs of the Committee and shall exercise such supervisory powers as may be given him/her by the Members of the Committee. The Chairperson will perform all duties incident to such office and such other duties as may be provided in these bylaws or as may be prescribed from time to time by the Committee. The Chairperson shall preside at all meetings and shall exercise parliamentary control in accordance with Robert's Rules of Order.

(5) Vice Chairperson

The Vice Chairperson shall act in place of the Chairperson in the event of the Chairperson's absence, inability, or refusal to act, and shall exercise and discharge such other duties as may be required by the Committee. The Vice Chairperson shall serve as the parliamentarian and interpret any ambiguities of the bylaws.

(6) Secretary

The Secretary will keep and maintain all records related to the Committee and take minutes of all meetings.

(7) Records

All elected officers and committee chairpersons shall relinquish their records to the Chairperson immediately upon the completion of their term of office or completion of a project.

(8) Resignation

An officer may resign the office while not resigning membership from the Committee, by submitting a letter to the Chairperson. Vacancies occurring in any office shall be appointed for the remainder of the term.

ARTICLE VII

Duties

(1) Prior to the Reference Date

The Committee shall be responsible for any additional negotiations with Allergan, including, but not limited to, negotiating extensions of any periods created by the Settlement Agreement.

(2) After the Effective Date

The Committee shall establish procedures for the receipt of notices that a dispute exists concerning the Agreement and review of such disputes, pursuant to **Section XIV** of the Agreement. Members may engage with Allergan, Settling States, and Participating Subdivisions attempting to resolve any dispute without further action by the Committee. The Committee may request additional information from Allergan, Settling States, and Participating Subdivisions to the extent the Committee believes such information is necessary to understand, resolve, or provide advice related to a dispute. The Committee shall endeavor to provide advice relative to the dispute no later than 60 days after receipt of notice.

ARTICLE VIII

Rules of Procedure

The proceedings and business of the Committee shall be governed by Robert's Rules of Order unless otherwise waived by the Committee.

ARTICLE IX

Operations

(1) Records

The Committee will keep correct and complete records and will also keep minutes of the proceedings of the Committee meetings and Committees. The Committee will keep such records at its principal place of business at a place designated by the Chairperson**.**

All elected officers and committee chairpersons shall relinquish their records to the Chairperson, immediately upon the completion of their term of office.

(2) Inspection of Books and Records

The minutes of a meeting are public records and shall be available for public inspection and copying on request to the Committee's Chairperson or the Chairperson's designee.

(3) Amendments

The bylaws may be amended at any time by a vote of a majority of Members present and must have at least one vote from a Settling State Member and a Participating Subdivision

Member. In the event that there is a Quorum, but no Settling State or Participating Subdivision Member is present, then a matter may pass with a simple majority vote.

EXHIBIT C
Litigating Subdivisions and Special Districts List[1]

State	Subdivision/Special District	Case No.	Jurisdiction
AL	Attentus Moulton, LLC d/b/a Lawrence Medical Center	1:19-op-45143	N.D. Ohio (Federal)
AL	Bibb County Healthcare Authority d/b/a Bibb Medical Center	CV-2021-900016	AL - Circuit Court of Conecuh County (State)
AL	City of Abbeville	1:18-op-45437	N.D. Ohio (Federal)
AL	City of Alabaster	1:22-op-45013	N.D. Ohio (Federal)
AL	City of Albertville	1:18-op-45230	N.D. Ohio (Federal)
AL	City of Alexander	1:19-op-45827	N.D. Ohio (Federal)
AL	City of Arab	1:18-op-45230	N.D. Ohio (Federal)
AL	City of Argo	1:19-op-45744	N.D. Ohio (Federal)
AL	City of Ashland	1:19-op-46102	N.D. Ohio (Federal)
AL	City of Ashville	1:20-op-45261	N.D. Ohio (Federal)
AL	City of Athens	1:19-op-45953	N.D. Ohio (Federal)
AL	City of Attalla	1:20-op-45265	N.D. Ohio (Federal)
AL	City of Auburn	1:20-op-45282	N.D. Ohio (Federal)
AL	City of Bay Minette	1:22-op-45018	N.D. Ohio (Federal)
AL	City of Bessemer	1:22-op-45014	N.D. Ohio (Federal)
AL	City of Birmingham	1:17-op-45008	N.D. Ohio (Federal)
AL	City of Boaz	1:18-op-45230	N.D. Ohio (Federal)
AL	City of Brent	1:19-op-45910	N.D. Ohio (Federal)
AL	City of Brewton	1:21-op-45113	N.D. Ohio (Federal)
AL	City of Bridgeport	1:18-op-45634	N.D. Ohio (Federal)
AL	City of Brundidge	1:19-op-46128	N.D. Ohio (Federal)
AL	City of Calera	1:21-op-45070	N.D. Ohio (Federal)
AL	City of Carbon Hill	1:18-op-45737	N.D. Ohio (Federal)
AL	City of Center Point	1:19-op-46103	N.D. Ohio (Federal)
AL	City of Centre	1:20-op-45265	N.D. Ohio (Federal)
AL	City of Centreville	1:19-op-46120	N.D. Ohio (Federal)
AL	City of Chickasaw	1:20-op-45115	N.D. Ohio (Federal)
AL	City of Childersburg	1:22-op-45020	N.D. Ohio (Federal)
AL	City of Clanton	1:18-op-46084 / 1:22-op-45016	N.D. Ohio (Federal)
AL	City of Columbiana	1:22-op-45016	N.D. Ohio (Federal)
AL	City of Cordova	1:18-op-45737	N.D. Ohio (Federal)
AL	City of Cullman	1:19-op-45248	N.D. Ohio (Federal)
AL	City of Dadeville	1:19-op-45779 / 1:20-op-45265	N.D. Ohio (Federal)
AL	City of Daleville	1:19-op-45778	N.D. Ohio (Federal)
AL	City of Daphne	1:20-op-45227	N.D. Ohio (Federal)
AL	City of Decatur	1:18-op-45201	N.D. Ohio (Federal)
AL	City of Demopolis	1:18-op-45183	N.D. Ohio (Federal)

[1] This list is subject to amendment in the event it proves to be incomplete and other entities that satisfy the definition for "Litigating Subdivision" or "Litigating Special District" are subsequently identified.

State	Subdivision/Special District	Case No.	Jurisdiction
AL	City of Dora	1:18-op-45171	N.D. Ohio (Federal)
AL	City of Dothan	1:19-op-45886	N.D. Ohio (Federal)
AL	City of East Brewton	1:22-op-45005	N.D. Ohio (Federal)
Al	City of Enterprise	1:18-op-45213	N.D. Ohio (Federal)
AL	City of Eufaula	1:19-op-46132	N.D. Ohio (Federal)
AL	City of Evergreen	1:18-op-45422	N.D. Ohio (Federal)
AL	City of Fairfield	1:20-op-45089	N.D. Ohio (Federal)
AL	City of Fairhope	1:22-op-45002	N.D. Ohio (Federal)
AL	City of Fayette	1:18-op-45211	N.D. Ohio (Federal)
AL	City of Florence	1:19-op-45073	N.D. Ohio (Federal)
AL	City of Foley	1:20-op-45287	N.D. Ohio (Federal)
AL	City of Fort Payne	1:17-op-45079	N.D. Ohio (Federal)
AL	City of Fultondale	1:20-op-45265	N.D. Ohio (Federal)
AL	City of Gadsden	1:17-op-45101	N.D. Ohio (Federal)
AL	City of Geneva	1:19-op-45986	N.D. Ohio (Federal)
AL	City of Georgiana	1:18-op-45436	N.D. Ohio (Federal)
AL	City of Graysville	1:20-op-45265	N.D. Ohio (Federal)
AL	City of Greensboro	1:18-op-45421	N.D. Ohio (Federal)
AL	City of Greenville	1:18-op-45023	N.D. Ohio (Federal)
AL	City of Guin	1:18-op-45457	N.D. Ohio (Federal)
AL	City of Gulf Shores	1:22-op-45019	N.D. Ohio (Federal)
AL	City of Guntersville	1:18-op-45230	N.D. Ohio (Federal)
AL	City of Haleyville	1:19-op-46118	N.D. Ohio (Federal)
AL	City of Hamilton	1:18-op-45564	N.D. Ohio (Federal)
AL	City of Hartselle	1:18-op-45736	N.D. Ohio (Federal)
AL	City of Headland	1:19-op-46131	N.D. Ohio (Federal)
AL	City of Helena	1:22-op-45016	N.D. Ohio (Federal)
AL	City of Henagar	1:18-op-45634	N.D. Ohio (Federal)
AL	City of Homewood	1:19-op-45973	N.D. Ohio (Federal)
AL	City of Hoover	1:19-op-45746	N.D. Ohio (Federal)
AL	City of Hueytown	1:18-op-45558	N.D. Ohio (Federal)
AL	City of Huntsville	1:19-op-45947	N.D. Ohio (Federal)
AL	City of Irondale	1:22-op-45012	N.D. Ohio (Federal)
AL	City of Jacksonville	1:20-op-45261	N.D. Ohio (Federal)
AL	City of Jasper	1:18-op-45171	N.D. Ohio (Federal)
AL	City of Killen	1:20-op-45218	N.D. Ohio (Federal)
AL	City of Lanett	1:19-op-46130	N.D. Ohio (Federal)
AL	City of Leeds	1:20-op-45088	N.D. Ohio (Federal)
AL	City of Leesburg	1:20-op-45261	N.D. Ohio (Federal)
AL	City of Level Plains	1:20-op-45100	N.D. Ohio (Federal)
AL	City of Lincoln	1:18-op-45786	N.D. Ohio (Federal)
AL	City of Linden	1:20-op-45118	N.D. Ohio (Federal)
AL	City of Louisville	1:19-op-46058	N.D. Ohio (Federal)
AL	City of Luverne	1:20-op-45109	N.D. Ohio (Federal)
AL	City of Madison	1:20-op-45198	N.D. Ohio (Federal)
AL	City of Marion	1:18-op-45217	N.D. Ohio (Federal)
AL	City of Midfield	1:18-op-45416	N.D. Ohio (Federal)

State	Subdivision/Special District	Case No.	Jurisdiction
AL	City of Millbrook	1:21-op-45135	N.D. Ohio (Federal)
AL	City of Mobile	1:18-op-45076	N.D. Ohio (Federal)
AL	City of Monroeville	1:20-op-45273	N.D. Ohio (Federal)
AL	City of Montgomery	1:18-op-45494	N.D. Ohio (Federal)
AL	City of Moody	1:20-op-45261	N.D. Ohio (Federal)
AL	City of Moulton	1:18-op-45202	N.D. Ohio (Federal)
AL	City of Mountain Brook	1:18-op-45558	N.D. Ohio (Federal)
AL	City of Muscle Shoals	1:20-op-45268	N.D. Ohio (Federal)
AL	City of Nauvoo	1:18-op-45737	N.D. Ohio (Federal)
AL	City of New Hope	1:18-op-45634	N.D. Ohio (Federal)
AL	City of Northport	1:20-op-45272	N.D. Ohio (Federal)
AL	City of Oakman	1:18-op-45737	N.D. Ohio (Federal)
AL	City of Oneonta	1:20-op-45210	N.D. Ohio (Federal)
AL	City of Opelika	1:20-op-45208	N.D. Ohio (Federal)
AL	City of Opp	1:18-op-45011	N.D. Ohio (Federal)
AL	City of Orange Beach	1:19-op-45784	N.D. Ohio (Federal)
AL	City of Oxford	1:19-op-45774	N.D. Ohio (Federal)
AL	City of Ozark	1:18-op-45214	N.D. Ohio (Federal)
AL	City of Parrish	1:18-op-45737	N.D. Ohio (Federal)
AL	City of Pelham	1:22-op-45016	N.D. Ohio (Federal)
AL	City of Pell City	1:20-op-45091	N.D. Ohio (Federal)
AL	City of Phenix	1:18-op-45179	N.D. Ohio (Federal)
AL	City of Piedmont	1:21-op-45049	N.D. Ohio (Federal)
AL	City of Pleasant Grove	1:18-op-45558	N.D. Ohio (Federal)
AL	City of Prattville	1:19-op-45783	N.D. Ohio (Federal)
AL	City of Prichard	1:18-op-45690	N.D. Ohio (Federal)
AL	City of Ragland	1:20-op-45261	N.D. Ohio (Federal)
AL	City of Rainbow City	1:20-op-45261	N.D. Ohio (Federal)
AL	City of Rainsville	1:19-op-45135	N.D. Ohio (Federal)
AL	City of Red Bay	1:19-op-45136	N.D. Ohio (Federal)
AL	City of Roanoke	1:22-op-45011	N.D. Ohio (Federal)
AL	City of Robertsdale	1:20-op-45272	N.D. Ohio (Federal)
AL	City of Russellville	1:19-op-45136	N.D. Ohio (Federal)
AL	City of Saraland	1:22-op-45017	N.D. Ohio (Federal)
AL	City of Satsuma	1:20-op-45116	N.D. Ohio (Federal)
AL	City of Scottsboro	1:18-op-45634	N.D. Ohio (Federal)
AL	City of Selma	1:18-op-45198	N.D. Ohio (Federal)
AL	City of Semmes	1:21-op-45113	N.D. Ohio (Federal)
AL	City of Sheffield	1:19-op-45136	N.D. Ohio (Federal)
AL	City of Sipsey	1:18-op-45737	N.D. Ohio (Federal)
AL	City of Slocomb	1:20-op-45208	N.D. Ohio (Federal)
AL	City of Spanish Fort	1:20-op-45208	N.D. Ohio (Federal)
AL	City of Springville	1:20-op-45261	N.D. Ohio (Federal)
AL	City of Sumiton	1:18-op-45171	N.D. Ohio (Federal)
AL	City of Sylacauga	1:19-op-45900	N.D. Ohio (Federal)
AL	City of Talladega	1:18-op-45190	N.D. Ohio (Federal)
AL	City of Thomasville	1:20-op-45261	N.D. Ohio (Federal)

State	Subdivision/Special District	Case No.	Jurisdiction
AL	City of Troy	1:18-op-45947	N.D. Ohio (Federal)
AL	City of Trussville	1:18-op-45192	N.D. Ohio (Federal)
AL	City of Tuscaloosa	1:18-op-45553	N.D. Ohio (Federal)
AL	City of Tuscumbia	1:18-op-45005	N.D. Ohio (Federal)
AL	City of Tuskegee	1:18-op-45544	N.D. Ohio (Federal)
AL	City of Union Springs	1:18-op-45204	N.D. Ohio (Federal)
AL	City of Uniontown	1:20-op-45117	N.D. Ohio (Federal)
AL	City of Vernon	1:18-op-45210	N.D. Ohio (Federal)
AL	City of Vestavia Hills	1:19-op-45141	N.D. Ohio (Federal)
AL	City of Weaver	1:18-op-45565	N.D. Ohio (Federal)
AL	City of Wetumpka	1:21-op-45135	N.D. Ohio (Federal)
AL	City of Winfield	1:18-op-45738	N.D. Ohio (Federal)
AL	County of Autauga	1:19-op-45086	N.D. Ohio (Federal)
AL	County of Baldwin	1:18-op-45152	N.D. Ohio (Federal)
AL	County of Barbour	1:18-op-45244	N.D. Ohio (Federal)
AL	County of Bibb	1:18-op-45413	N.D. Ohio (Federal)
AL	County of Blount	1:18-op-45415	N.D. Ohio (Federal)
AL	County of Bullock	1:18-op-45246	N.D. Ohio (Federal)
AL	County of Butler	1:18-op-45441	N.D. Ohio (Federal)
AL	County of Calhoun	1:18-op-45191	N.D. Ohio (Federal)
AL	County of Chambers	1:18-op-45408	N.D. Ohio (Federal)
AL	County of Cherokee	1:18-op-45207	N.D. Ohio (Federal)
AL	County of Chilton	1:18-op-45735	N.D. Ohio (Federal)
AL	County of Choctaw	1:19-op-45770	N.D. Ohio (Federal)
AL	County of Clarke	1:18-op-45247	N.D. Ohio (Federal)
AL	County of Clay	1:18-op-45248	N.D. Ohio (Federal)
AL	County of Cleburne	1:18-op-45566	N.D. Ohio (Federal)
AL	County of Coffee	1:18-op-45182	N.D. Ohio (Federal)
AL	County of Colbert	1:18-op-45005	N.D. Ohio (Federal)
AL	County of Conecuh	1:18-op-45957	N.D. Ohio (Federal)
AL	County of Coosa	1:19-op-45995	N.D. Ohio (Federal)
AL	County of Covington	1:19-op-45751	N.D. Ohio (Federal)
AL	County of Crenshaw	1:19-op-45983	N.D. Ohio (Federal)
AL	County of Cullman	1:18-op-45227	N.D. Ohio (Federal)
AL	County of Dale	1:18-op-45561	N.D. Ohio (Federal)
AL	County of Dallas	1:18-op-45667	N.D. Ohio (Federal)
AL	County of DeKalb	1:20-op-45209	N.D. Ohio (Federal)
AL	County of Elmore	1:22-op-45003	N.D. Ohio (Federal)
AL	County of Escambia	1:20-op-45112	N.D. Ohio (Federal)
AL	County of Etowah	1:17-op-45101	N.D. Ohio (Federal)
AL	County of Fayette	1:18-op-45211	N.D. Ohio (Federal)
AL	County of Franklin	1:18-op-45005	N.D. Ohio (Federal)
AL	County of Geneva	1:20-op-45105	N.D. Ohio (Federal)
AL	County of Greene	1:18-op-45209	N.D. Ohio (Federal)
AL	County of Hale	1:18-op-45420	N.D. Ohio (Federal)
AL	County of Henry	1:18-op-45543	N.D. Ohio (Federal)
AL	County of Houston	1:18-op-45019	N.D. Ohio (Federal)

State	Subdivision/Special District	Case No.	Jurisdiction
AL	County of Jackson	1:18-op-45634	N.D. Ohio (Federal)
AL	County of Jefferson	1:18-op-45558	N.D. Ohio (Federal)
AL	County of Lamar	1:18-op-45210	N.D. Ohio (Federal)
AL	County of Lauderdale	1:19-op-45845	N.D. Ohio (Federal)
AL	County of Lawrence	1:18-op-45228	N.D. Ohio (Federal)
AL	County of Limestone	1:18-op-45328	N.D. Ohio (Federal)
AL	County of Lowndes	1:18-op-45203	N.D. Ohio (Federal)
AL	County of Macon	1:19-op-45982	N.D. Ohio (Federal)
AL	County of Madison	1:19-op-45006	N.D. Ohio (Federal)
AL	County of Marengo	1:18-op-45188	N.D. Ohio (Federal)
AL	County of Marion	1:18-op-45171	N.D. Ohio (Federal)
AL	County of Marshall	1:18-op-45230	N.D. Ohio (Federal)
AL	County of Mobile	1:18-op-45186	N.D. Ohio (Federal)
AL	County of Monroe	1:20-op-45273	N.D. Ohio (Federal)
AL	County of Montgomery	1:18-op-45445	N.D. Ohio (Federal)
AL	County of Morgan	1:18-op-45200	N.D. Ohio (Federal)
AL	County of Perry	1:20-op-45158	N.D. Ohio (Federal)
AL	County of Pickens	1:18-op-45171	N.D. Ohio (Federal)
AL	County of Pike	1:18-op-45803	N.D. Ohio (Federal)
AL	County of Randolph	1:22-op-45003	N.D. Ohio (Federal)
AL	County of Russell	1:19-op-45826	N.D. Ohio (Federal)
AL	County of Shelby	1:18-op-45414	N.D. Ohio (Federal)
AL	County of St. Clair	1:18-op-45614	N.D. Ohio (Federal)
AL	County of Sumter	1:18-op-45194	N.D. Ohio (Federal)
AL	County of Talladega	1:18-op-45190	N.D. Ohio (Federal)
AL	County of Tallapoosa	1:17-op-45097	N.D. Ohio (Federal)
AL	County of Tuscaloosa	1:18-op-45196	N.D. Ohio (Federal)
AL	County of Walker	1:18-op-45171	N.D. Ohio (Federal)
AL	County of Washington	1:18-op-45180	N.D. Ohio (Federal)
AL	County of Wilcox	1:18-op-45181	N.D. Ohio (Federal)
AL	Cullman Regional Medical Center, Inc.	1:19-op-46059	N.D. Ohio (Federal)
AL	Dale County Health Care Authority d/b/a Dale Medical Center	CV-2021-900016	AL - Circuit Court of Conecuh County (State)
AL	DCH Health Care Authority	CV-2019-000007 / CV-2021-900016	AL - Circuit Court of Conecuh County (State)
AL	Family Oriented Primary Health Care Clinic	02-CV-2019-902806	AL - Circuit Court of Mobile County (State)
AL	Geneva County Health Care Authority d/b/a Wiregrass Medical Center	CV-2021-900016	AL - Circuit Court of Conecuh County (State)
AL	Greene County Hospital Board	CV-2021-900016	AL - Circuit Court of Conecuh County (State)
AL	Healthcare Authority for Baptist Health	CV-2019-000007 / CV-2021-900016	AL - Circuit Court of Conecuh County (State)
AL	HH Health System-Athens Limestone, LLC d/b/a Athens Limestone Hospital	1:19-op-45143	N.D. Ohio (Federal)
AL	HH Health System-Morgan, LLC d/b/a Decatur Morgan Hospital - Decatur and Decatur Morgan Hospital - Parkway	1:19-op-45143	N.D. Ohio (Federal)
AL	HH Health System-Shoals, LLC d/b/a Helen Keller Hospital and Red Bay Hospital	1:19-op-45143	N.D. Ohio (Federal)

State	Subdivision/Special District	Case No.	Jurisdiction
AL	J. Paul Jones Hospital	1:18-op-45161	N.D. Ohio (Federal)
AL	Jefferson County Board of Health	1:18-op-45558	N.D. Ohio (Federal)
AL	Medical West Hospital Authority	CV-2019-000007 / CV-2021-900016	AL - Circuit Court of Conecuh County (State)
AL	Mobile County Board of Health	02-CV-2019-902806	AL - Circuit Court of Mobile County (State)
AL	Monroe County Healthcare Authority	CV-2021-900016	AL - Circuit Court of Conecuh County (State)
AL	Sheriff of Etowah County (Sheriff Todd Entrekin)	1:17-op-45101	N.D. Ohio (Federal)
AL	Sheriff of Fayette County (Sheriff Rodney Ingle)	1:18-op-45211	N.D. Ohio (Federal)
AL	Sheriff of Jefferson County (Sheriff Mike Hale)	1:18-op-45558	N.D. Ohio (Federal)
AL	Sheriff of Lamar County (Sheriff Hal Allred)	1:18-op-45210	N.D. Ohio (Federal)
AL	Sylacauga Health Care Authority d/b/a Coosa Valley Medical Center	CV-2021-900016	AL - Circuit Court of Conecuh County (State)
AL	The Health Care Authority of Clarke County	CV-2019-000007 / CV-2021-900016	AL - Circuit Court of Conecuh County (State)
AL	The Health Care Authority of Cullman County	1:19-op-46059	N.D. Ohio (Federal)
AL	The Health Care Authority of Morgan County - City of Decatur	1:19-op-45143	N.D. Ohio (Federal)
AL	The Health Care Authority of the City of Huntsville d/b/a HH Health System	1:19-op-45143	N.D. Ohio (Federal)
AL	The Health Care Authority of the City of Huntsville d/b/a Huntsville Hospital	1:19-op-45143	N.D. Ohio (Federal)
AL	The Health Care Authority of the City of Huntsville d/b/a Huntsville Hospital for Women and Children	1:19-op-45143	N.D. Ohio (Federal)
AL	The Health Care Authority of the City of Huntsville d/b/a Madison Hospital	1:19-op-45143	N.D. Ohio (Federal)
AL	The Jackson County Health Care Authority	1:19-op-45134	N.D. Ohio (Federal)
AL	The Marshall County Health Care Authority d/b/a Marshall Medical Center North d/b/a Marshall Medical Center South	1:18-op-45538	N.D. Ohio (Federal)
AL	Tombigbee Health Care Authority d/b/a Brian W. Whitfield Memorial Hospital	CV-2021-900016	AL - Circuit Court of Conecuh County (State)
AL	Town of Berry	1:18-op-45211	N.D. Ohio (Federal)
AL	Town of Brookwood	1:20-op-45272	N.D. Ohio (Federal)
AL	Town of Butler	1:18-op-45216	N.D. Ohio (Federal)
AL	Town of Camp Hill	1:20-op-45265	N.D. Ohio (Federal)
AL	Town of Cedar Bluff	1:20-op-45265	N.D. Ohio (Federal)
AL	Town of Cherokee	1:18-op-45005	N.D. Ohio (Federal)
AL	Town of Cleveland	1:20-op-45217	N.D. Ohio (Federal)
AL	Town of Dauphin Island	1:20-op-45119	N.D. Ohio (Federal)
AL	Town of Double Springs	1:18-op-45739	N.D. Ohio (Federal)
AL	Town of Douglas	1:18-op-45230	N.D. Ohio (Federal)
AL	Town of Faunsdale	1:20-op-45122	N.D. Ohio (Federal)
AL	Town of Fort Deposit	1:19-op-45427	N.D. Ohio (Federal)
AL	Town of Geraldine	1:18-op-45634	N.D. Ohio (Federal)
AL	Town of Gilbertown	1:20-op-45265	N.D. Ohio (Federal)
AL	Town of Grant	1:18-op-45230	N.D. Ohio (Federal)

State	Subdivision/Special District	Case No.	Jurisdiction
AL	Town of Gurley	1:20-op-45217	N.D. Ohio (Federal)
AL	Town of Hammondville	1:19-op-45135	N.D. Ohio (Federal)
AL	Town of Leighton	1:19-op-45136	N.D. Ohio (Federal)
AL	Town of Locust Fork	1:19-op-45777	N.D. Ohio (Federal)
AL	Town of Loxley	1:22-op-45018	N.D. Ohio (Federal)
AL	Town of McKenzie	1:18-op-45435	N.D. Ohio (Federal)
AL	Town of Munford	1:18-op-45785	N.D. Ohio (Federal)
AL	Town of Oakman	1:20-op-45265	N.D. Ohio (Federal)
AL	Town of Powell	1:20-op-45209	N.D. Ohio (Federal)
AL	Town of Priceville	1:20-op-45217	N.D. Ohio (Federal)
AL	Town of Rockford	1:19-op-45915	N.D. Ohio (Federal)
AL	Town of Summerdale	1:22-op-45018	N.D. Ohio (Federal)
AL	Town of Sweet Water	1:20-op-45120	N.D. Ohio (Federal)
AL	Town of Vance	1:19-op-45909	N.D. Ohio (Federal)
AL	Town of West Blocton	1:20-op-45208	N.D. Ohio (Federal)
AL	Town of Woodville	1:18-op-45634	N.D. Ohio (Federal)
AL	Town of Yellow Bluff	1:18-op-45423	N.D. Ohio (Federal)
AZ	City of Bullhead	1:21-op-45085	N.D. Ohio (Federal)
AZ	City of Glendale	1:21-op-45086	N.D. Ohio (Federal)
AZ	City of Kingman	1:18-op-46057	N.D. Ohio (Federal)
AZ	City of Phoenix	1:18-op-45510	N.D. Ohio (Federal)
AZ	City of Prescott	1:21-op-45090	N.D. Ohio (Federal)
AZ	City of Surprise	1:21-op-45091	N.D. Ohio (Federal)
AZ	City of Tucson	1:19-op-45267	N.D. Ohio (Federal)
AZ	County of Apache	1:21-op-45084	N.D. Ohio (Federal)
AZ	County of Cochise	1:18-op-45855	N.D. Ohio (Federal)
AZ	County of La Paz	1:21-op-45087	N.D. Ohio (Federal)
AZ	County of Maricopa	1:19-op-45020	N.D. Ohio (Federal)
AZ	County of Mohave	1:19-op-45117	N.D. Ohio (Federal)
AZ	County of Navajo	1:19-op-45217	N.D. Ohio (Federal)
AZ	County of Pima	1:19-op-45268	N.D. Ohio (Federal)
AZ	County of Pinal	1:21-op-45088	N.D. Ohio (Federal)
AZ	County of Yuma	1:19-op-45575	N.D. Ohio (Federal)
CA	Central California Alliance for Health	1:19-op-45971	N.D. Ohio (Federal)
CA	City and County of San Francisco (City Attorney Dennis J. Herrera)	3:18-cv-07591	N.D. California (Federal)
CA	City of Anaheim (City Attorney Robert Fabela)	1:20-op-45055	N.D. Ohio (Federal)
CA	City of Chico	1:20-op-45189	N.D. Ohio (Federal)
CA	City of Chula Vista	1:19-op-45750	N.D. Ohio (Federal)
CA	City of Clearlake	1:20-op-45251	N.D. Ohio (Federal)
CA	City of Costa Mesa (City Attorney Kimberly Hall Barlow)	1:20-op-45055	N.D. Ohio (Federal)
CA	City of Dublin (City Attorney John Bakker)	1:20-op-45255	N.D. Ohio (Federal)
CA	City of El Monte (City Attorney Rick Olivarez)	JCCP 5029	MDL - Prescription Opioid Cases (CA - County of Los Angeles) (State MDL)
CA	City of Encinitas (City Attorney Leslie Devaney)	1:20-op-45055	N.D. Ohio (Federal)
CA	City of Eureka (City Attorney Robert Norris	1:18-op-46092	N.D. Ohio (Federal)

State	Subdivision/Special District	Case No.	Jurisdiction
	Black)		
CA	City of Fullerton (City Attorney Richard D. Jones)	1:20-op-45143	N.D. Ohio (Federal)
CA	City of Huntington Beach	1:18-op-45588	N.D. Ohio (Federal)
CA	City of Irvine (City Attorney Jeffrey Melching)	1:19-op-45734	N.D. Ohio (Federal)
CA	City of La Habra (City Attorney Richard D. Jones)	1:20-op-45055	N.D. Ohio (Federal)
CA	City of La Mesa (City Attorney Glenn Sabine)	1:20-op-45055	N.D. Ohio (Federal)
CA	City of Laguna Beach	1:19-op-45447	N.D. Ohio (Federal)
CA	City of Lakeport	1:20-op-45242	N.D. Ohio (Federal)
CA	City of Los Angeles	1:18-op-45601	N.D. Ohio (Federal)
CA	City of Murrieta (City Attorney Leslie Devaney)	1:20-op-45255	N.D. Ohio (Federal)
CA	City of Oakland (City Attorney Barbara J. Parker)	30-2014-00725287-CU-BT-CXC	CA - County of Orange (State)
CA	City of Oxnard (City Attorney Stephen Fischer)	1:20-op-45055	N.D. Ohio (Federal)
CA	City of Placentia (City Attorney Christian Bettenhausen)	1:20-op-45055	N.D. Ohio (Federal)
CA	City of Sacramento (City Attorney Susana Alcala Wood)	1:20-op-45290	N.D. Ohio (Federal)
CA	City of San Clemente (City Attorney Scott C. Smith)	1:20-op-45055	N.D. Ohio (Federal)
CA	City of San Diego (City Attorney Mara W. Elliot)	1:19-op-45192	N.D. Ohio (Federal)
CA	City of San Jose	1:19-op-45768	N.D. Ohio (Federal)
CA	City of Santa Ana (City Attorney Sonia R. Carvalho)	1:20-op-45055	N.D. Ohio (Federal)
CA	City of Westminster (City Attorney Richard D. Jones)	1:20-op-45143	N.D. Ohio (Federal)
CA	County of Alameda (County Counsel Donna Ziegler)	1:20-op-45055	N.D. Ohio (Federal)
CA	County of Amador	1:18-op-46075	N.D. Ohio (Federal)
CA	County of Butte	1:18-op-45627	N.D. Ohio (Federal)
CA	County of Calaveras	1:18-op-45645	N.D. Ohio (Federal)
CA	County of Contra Costa	1:18-op-45656	N.D. Ohio (Federal)
CA	County of Del Norte	1:18-op-45655	N.D. Ohio (Federal)
CA	County of El Dorado	1:18-op-45629	N.D. Ohio (Federal)
CA	County of Fresno	1:18-op-45644	N.D. Ohio (Federal)
CA	County of Glenn	1:18-op-45639	N.D. Ohio (Federal)
CA	County of Humboldt	1:18-op-45942	N.D. Ohio (Federal)
CA	County of Imperial	1:18-op-45631	N.D. Ohio (Federal)
CA	County of Inyo	1:18-op-45646	N.D. Ohio (Federal)
CA	County of Kern (County Attorney Margo Raison)	JCCP 5029	MDL - Prescription Opioid Cases (CA - County of Los Angeles) (State MDL)
CA	County of Lassen	1:18-op-45609	N.D. Ohio (Federal)
CA	County of Los Angeles (County Counsel Mary C. Wickham)	30-2014-00725287-CU-BT-CXC	CA - County of Orange (State)
CA	County of Madera	1:18-op-45647	N.D. Ohio (Federal)
CA	County of Marin	1:18-op-45657	N.D. Ohio (Federal)
CA	County of Mariposa	1:18-op-45618	N.D. Ohio (Federal)
CA	County of Mendocino	1:18-op-45654	N.D. Ohio (Federal)

State	Subdivision/Special District	Case No.	Jurisdiction
CA	County of Merced	1:18-op-45643	N.D. Ohio (Federal)
CA	County of Modoc	1:18-op-45641	N.D. Ohio (Federal)
CA	County of Mono	1:18-op-45626	N.D. Ohio (Federal)
CA	County of Monterey	1:18-op-45615	N.D. Ohio (Federal)
CA	County of Napa	1:18-op-45750	N.D. Ohio (Federal)
CA	County of Nevada	1:18-op-45628	N.D. Ohio (Federal)
CA	County of Orange (District Attorney Tony Rackauckas)	30-2014-00725287-CU-BT-CXC	CA - County of Orange (State)
CA	County of Placer	1:18-op-45642	N.D. Ohio (Federal)
CA	County of Plumas	1:18-op-45649	N.D. Ohio (Federal)
CA	County of Riverside	1:18-op-45878	N.D. Ohio (Federal)
CA	County of Sacramento	1:18-op-45608	N.D. Ohio (Federal)
CA	County of San Benito	1:18-op-45653	N.D. Ohio (Federal)
CA	County of San Bernardino	1:18-op-46032	N.D. Ohio (Federal)
CA	County of San Diego	1:18-op-45613	N.D. Ohio (Federal)
CA	County of San Luis Obispo	1:18-op-46290	N.D. Ohio (Federal)
CA	County of San Mateo	1:18-op-46319 / 1:19-op-45126	N.D. Ohio (Federal)
CA	County of Santa Barbara	1:19-op-45128	N.D. Ohio (Federal)
CA	County of Santa Clara (County Counsel James R. Williams)	30-2014-00725287-CU-BT-CXC	CA - County of Orange (State)
CA	County of Santa Cruz	1:18-op-45679	N.D. Ohio (Federal)
CA	County of Shasta	1:18-op-45651	N.D. Ohio (Federal)
CA	County of Siskiyou	1:18-op-45630	N.D. Ohio (Federal)
CA	County of Sonoma	1:18-op-45849	N.D. Ohio (Federal)
CA	County of Sutter	1:18-op-45640	N.D. Ohio (Federal)
CA	County of Tehama	1:18-op-45680	N.D. Ohio (Federal)
CA	County of Trinity	1:18-op-45650	N.D. Ohio (Federal)
CA	County of Tulare	1:18-op-45997	N.D. Ohio (Federal)
CA	County of Tuolumne	1:18-op-45619	N.D. Ohio (Federal)
CA	County of Ventura	1:19-op-45747	N.D. Ohio (Federal)
CA	County of Yolo (County Counsel Philip Pogledich)	1:19-op-45351	N.D. Ohio (Federal)
CA	County of Yuba	1:18-op-45648	N.D. Ohio (Federal)
CA	Downey Unified School District	2020-70878 / 2018-63587 (master) / 1:21-op-45080	MDL - In re Texas Opioid Litigation (TX - 152nd Judicial District of Harris County) (State MDL) / N.D. Ohio (Federal)
CA	Elk Grove Unified School District	2020-70878 / 2018-63587 (master) / 1:21-op-45080	MDL - In re Texas Opioid Litigation (TX - 152nd Judicial District of Harris County) (State MDL) / N.D. Ohio (Federal)
CA	Health Plan of San Joaquin	1:19-op-46093	N.D. Ohio (Federal)
CA	Inland Empire Health Plan	1:19-op-45804	N.D. Ohio (Federal)
CA	Kern High School District	2020-70878 / 2018-63587 (master) / 1:21-op-45080	MDL - In re Texas Opioid Litigation (TX - 152nd Judicial District of Harris County) (State MDL) / N.D. Ohio (Federal)
CA	Lassen County Office of Education	1:22-op-45031	N.D. Ohio (Federal)
CA	Local Initiative Health Authority for Los Angeles County o/a L.A. Care Health Plan	1:19-op-45212	N.D. Ohio (Federal)

State	Subdivision/Special District	Case No.	Jurisdiction
CA	Pleasant Valley School District	1:21-op-45120	N.D. Ohio (Federal)
CA	San Leandro Unified School District	1:21-op-45114	N.D. Ohio (Federal)
CA	Santa Barbara San Luis Obispo Regional Health Authority	1:19-op-45895	N.D. Ohio (Federal)
CA	Susanville Elementary School District	1:22-op-45031	N.D. Ohio (Federal)
CA	Ventura County Medi-Cal Managed Care	1:19-op-46020	N.D. Ohio (Federal)
CO	City and County of Broomfield	1:19-op-45036	N.D. Ohio (Federal)
CO	City and County of Denver	1:19-op-45036	N.D. Ohio (Federal)
CO	City of Alamosa	1:18-op-45740	N.D. Ohio (Federal)
CO	City of Aurora	1:19-op-45036	N.D. Ohio (Federal)
CO	City of Black Hawk	1:19-op-45036	N.D. Ohio (Federal)
CO	City of Brighton	1:19-op-45298	N.D. Ohio (Federal)
CO	City of Commerce City	1:19-op-45036	N.D. Ohio (Federal)
CO	City of Federal Heights	1:19-op-45573	N.D. Ohio (Federal)
CO	City of Greeley	1:19-op-45977	N.D. Ohio (Federal)
CO	City of Lakewood	1:18-op-45800	N.D. Ohio (Federal)
CO	City of Northglenn	1:19-op-45036	N.D. Ohio (Federal)
CO	City of Sheridan	1:19-op-45572	N.D. Ohio (Federal)
CO	City of Thornton	1:19-op-45034	N.D. Ohio (Federal)
CO	City of Westminster	1:19-op-45036	N.D. Ohio (Federal)
CO	City of Wheat Ridge	1:18-op-45800	N.D. Ohio (Federal)
CO	County of Adams (Board of County Commissioners)	1:19-op-45036	N.D. Ohio (Federal)
CO	County of Alamosa	1:18-op-45740	N.D. Ohio (Federal)
CO	County of Arapahoe (Board of County Commissioners)	1:19-op-45036	N.D. Ohio (Federal)
CO	County of Boulder (Board of County Commissioners)	1:19-op-45036	N.D. Ohio (Federal)
CO	County of Chaffee	1:18-op-45740	N.D. Ohio (Federal)
CO	County of Conejos	1:18-op-45740	N.D. Ohio (Federal)
CO	County of Fremont (Board of County Commissioners)	1:19-op-45036	N.D. Ohio (Federal)
CO	County of Huerfano	1:18-op-45168	N.D. Ohio (Federal)
CO	County of Jefferson (Board of County Commissioners)	1:19-op-45035	N.D. Ohio (Federal)
CO	County of Larimer (Board of County Commissioners)	1:19-op-45036	N.D. Ohio (Federal)
CO	County of Las Animas	1:18-op-45740	N.D. Ohio (Federal)
CO	County of Mesa (Board of County Commissioners)	1:19-op-45923	N.D. Ohio (Federal)
CO	County of Otero	1:18-op-45740	N.D. Ohio (Federal)
CO	County of Pueblo	1:18-op-45801	N.D. Ohio (Federal)
CO	County of Teller (Board of County Commissioners)	1:19-op-45036	N.D. Ohio (Federal)
CO	Mesa County Valley School District 51	2020-70878 / 2018-63587 (master) / 1:21-op-45080	MDL - In re Texas Opioid Litigation (TX - 152nd Judicial District of Harris County) (State MDL) / N.D. Ohio (Federal)
CO	Town of Hudson	1:19-op-45036	N.D. Ohio (Federal)
CT	City of Ansonia	X07 HHD CV 17 6086134 S	MDL - In re Opioid Litigation (CT - Superior Court, Judicial District of Hartford) (State

State	Subdivision/Special District	Case No.	Jurisdiction
		(consolidated)	MDL)
CT	City of Danbury	X07 HHD CV 17 6086134 S (consolidated)	MDL - In re Opioid Litigation (CT - Superior Court, Judicial District of Hartford) (State MDL)
CT	City of Derby	X07 HHD CV 17 6086134 S (consolidated)	MDL - In re Opioid Litigation (CT - Superior Court, Judicial District of Hartford) (State MDL)
CT	City of Middletown	1:19-op-45651	N.D. Ohio (Federal)
CT	City of New London	X07 HHD CV 17 6086134 S (consolidated)	MDL - In re Opioid Litigation (CT - Superior Court, Judicial District of Hartford) (State MDL)
CT	City of Norwalk	X07 HHD CV 17 6086134 S (consolidated)	MDL - In re Opioid Litigation (CT - Superior Court, Judicial District of Hartford) (State MDL)
CT	City of Norwich	1:19-op-45840	N.D. Ohio (Federal)
CT	Town of Enfield	1:19-op-45581	N.D. Ohio (Federal)
CT	Town of Monroe	1:19-op-45441	N.D. Ohio (Federal)
CT	Town of Wallingford	X07 HHD CV 17 6086134 S (consolidated)	MDL - In re Opioid Litigation (CT - Superior Court, Judicial District of Hartford) (State MDL)
CT	Town of Wethersfield	1:19-op-45663	N.D. Ohio (Federal)
CT	Town of Windham	1:20-op-45103	N.D. Ohio (Federal)
DE	City of Dover	K19C-06-022	DE - Superior Court of the State of Delaware (State)
DE	City of Seaford	K19C-06-022	DE - Superior Court of the State of Delaware (State)
DE	County of Kent	K19C-06-022	DE - Superior Court of the State of Delaware (State)
DE	County of Sussex	1:19-op-45723	N.D. Ohio (Federal)
FL	Halifax Hospital Medical Center	CACE-19-018882	FL - 17th Judicial Circuit Court of Broward County (State)
FL	Lee Memorial Health System d/b/a Lee Health	1:21-op-45092	N.D. Ohio (Federal)
FL	North Broward Hospital District	CACE-19-018882	FL - 17th Judicial Circuit Court of Broward County (State)
FL	Putnam County School Board	1:22-op-45025	N.D. Ohio (Federal)
FL	Sarasota County Public Hospital District d/b/a Memorial Healthcare System, Inc.	1:18-op-46136	N.D. Ohio (Federal)
FL	School Board of Miami-Dade	1:19-op-45913	N.D. Ohio (Federal)
FL	South Florida Behavioral Health Network	1:19-op-46070	N.D. Ohio (Federal)
GA	Albany Area Community Service Board d/b/a Aspire Behavioral Health & Developmental Disability Services	1:20-op-45249	N.D. Ohio (Federal)
GA	Bacon County Hospital Foundation Inc. d/b/a Bacon County Hospital and Health System	1:18-op-45285	N.D. Ohio (Federal)
GA	Bibb County School District	2020-70878 / 2018-63587 (master) / 1:21-op-45080	MDL - In re Texas Opioid Litigation (TX - 152nd Judicial District of Harris County) (State MDL) / N.D. Ohio (Federal)
GA	Chatham County Hospital Authority	1:19-op-45725	N.D. Ohio (Federal)
GA	City of Adel	1:19-op-45318	N.D. Ohio (Federal)
GA	City of Albany	1:18-op-46337	N.D. Ohio (Federal)

State	Subdivision/Special District	Case No.	Jurisdiction
GA	City of Alma	1:18-op-45620	N.D. Ohio (Federal)
GA	City of Arlington	1:19-op-45129	N.D. Ohio (Federal)
GA	City of Atlanta	1:18-op-46308	N.D. Ohio (Federal)
GA	City of Augusta	1:18-op-45233	N.D. Ohio (Federal)
GA	City of Bainbridge	1:18-op-45383	N.D. Ohio (Federal)
GA	City of Blackshear	1:19-op-45802	N.D. Ohio (Federal)
GA	City of Blakely	1:19-op-45129	N.D. Ohio (Federal)
GA	City of Brunswick	1:18-op-45270	N.D. Ohio (Federal)
GA	City of Cartersville	1:18-op-45282	N.D. Ohio (Federal)
GA	City of Columbus	1:18-op-45567	N.D. Ohio (Federal)
GA	City of Damascus	1:19-op-45129	N.D. Ohio (Federal)
GA	City of Dawson	1:19-op-45619	N.D. Ohio (Federal)
GA	City of Demorest	1:18-op-46113	N.D. Ohio (Federal)
GA	City of Doraville	1:19-op-46056	N.D. Ohio (Federal)
GA	City of Dunwoody	1:19-op-46054	N.D. Ohio (Federal)
GA	City of Fitzgerald	1:18-op-45603	N.D. Ohio (Federal)
GA	City of Gainesville	18-op-45486	N.D. Ohio (Federal)
GA	City of Lakeland	1:19-op-45618	N.D. Ohio (Federal)
GA	City of Milledgeville	1:18-op-45495	N.D. Ohio (Federal)
GA	City of Nashville	1:19-op-45617	N.D. Ohio (Federal)
GA	City of Pooler	1:18-op-45391	N.D. Ohio (Federal)
GA	City of Richmond Hill	1:18-op-45305	N.D. Ohio (Federal)
GA	City of Rome	1:18-op-45282	N.D. Ohio (Federal)
GA	City of Sandy Springs	1:18-op-45516	N.D. Ohio (Federal)
GA	City of Savannah	1:18-op-45550	N.D. Ohio (Federal)
GA	City of Springfield	1:19-op-45199	N.D. Ohio (Federal)
GA	City of Tifton	1:18-op-45454	N.D. Ohio (Federal)
GA	City of Warwick	1:19-op-45621	N.D. Ohio (Federal)
GA	City of Woodbury	1:18-op-45575	N.D. Ohio (Federal)
GA	Clayton Community MH/SA/DS Service Board	1:20-op-45249	N.D. Ohio (Federal)
GA	Clinch County Hospital Authority	1:18-op-45453	N.D. Ohio (Federal)
GA	Cobb County Community Service Board	1:20-op-45249	N.D. Ohio (Federal)
GA	Community Mental Health Center of East Central Georgia d/b/a Serenity Behavioral Health Systems	1:20-op-45249	N.D. Ohio (Federal)
GA	Community Service Board of Middle Georgia	1:20-op-45249	N.D. Ohio (Federal)
GA	County of Appling	1:20-op-45081	N.D. Ohio (Federal)
GA	County of Athens-Clarke (Unified Government)	1:18-op-45218	N.D. Ohio (Federal)
GA	County of Atkinson	1:19-op-45118	N.D. Ohio (Federal)
GA	County of Bacon	1:18-op-46105	N.D. Ohio (Federal)
GA	County of Banks	1:18-op-45378	N.D. Ohio (Federal)
GA	County of Bartow	1:19-op-45045	N.D. Ohio (Federal)
GA	County of Ben Hill	1:18-op-45505	N.D. Ohio (Federal)
GA	County of Berrien	1:18-op-45834	N.D. Ohio (Federal)
GA	County of Brantley	1:18-op-45714	N.D. Ohio (Federal)
GA	County of Brooks	1:18-op-45981	N.D. Ohio (Federal)
GA	County of Bulloch	1:18-op-45394	N.D. Ohio (Federal)
GA	County of Burke	1:19-op-45207	N.D. Ohio (Federal)

State	Subdivision/Special District	Case No.	Jurisdiction
GA	County of Butts	1:18-op-45490	N.D. Ohio (Federal)
GA	County of Camden	1:18-op-45717	N.D. Ohio (Federal)
GA	County of Candler	1:18-op-45165	N.D. Ohio (Federal)
GA	County of Carroll	1:18-op-46269	N.D. Ohio (Federal)
GA	County of Catoosa	1:18-op-45497	N.D. Ohio (Federal)
GA	County of Charlton	1:18-op-45713	N.D. Ohio (Federal)
GA	County of Chatham	1:18-op-45267	N.D. Ohio (Federal)
GA	County of Chattooga	1:18-op-45282	N.D. Ohio (Federal)
GA	County of Cherokee	1:19-op-45174	N.D. Ohio (Federal)
GA	County of Clay	1:19-op-45194	N.D. Ohio (Federal)
GA	County of Clayton	1:18-op-46298	N.D. Ohio (Federal)
GA	County of Clinch	1:19-op-45197	N.D. Ohio (Federal)
GA	County of Cobb	1:18-op-45817	N.D. Ohio (Federal)
GA	County of Columbia	1:18-op-45607	N.D. Ohio (Federal)
GA	County of Cook	1:18-op-45284	N.D. Ohio (Federal)
GA	County of Crisp	1:18-op-45238	N.D. Ohio (Federal)
GA	County of Dade	1:19-op-46099	N.D. Ohio (Federal)
GA	County of Dawson	1:19-op-45210	N.D. Ohio (Federal)
GA	County of Decatur	1:18-op-45334	N.D. Ohio (Federal)
GA	County of DeKalb	1:18-op-45503	N.D. Ohio (Federal)
GA	County of Dooly	1:18-op-45712	N.D. Ohio (Federal)
GA	County of Dougherty	1:18-op-45491	N.D. Ohio (Federal)
GA	County of Early	1:19-op-45180	N.D. Ohio (Federal)
GA	County of Echols	1:18-op-46204	N.D. Ohio (Federal)
GA	County of Effingham	1:19-op-45178	N.D. Ohio (Federal)
GA	County of Elbert	1:18-op-45381	N.D. Ohio (Federal)
GA	County of Emanuel	1:19-op-45209	N.D. Ohio (Federal)
GA	County of Evans	1:20-op-45080	N.D. Ohio (Federal)
GA	County of Fannin	1:19-op-45269	N.D. Ohio (Federal)
GA	County of Fayette	1:19-op-45293	N.D. Ohio (Federal)
GA	County of Floyd	1:18-op-45282	N.D. Ohio (Federal)
GA	County of Forsyth	1:19-op-45420	N.D. Ohio (Federal)
GA	County of Fulton	1:18-op-45374	N.D. Ohio (Federal)
GA	County of Glascock	1:19-op-45175	N.D. Ohio (Federal)
GA	County of Glynn	1:18-op-46115	N.D. Ohio (Federal)
GA	County of Grady	1:18-op-46338	N.D. Ohio (Federal)
GA	County of Greene	1:19-op-45203	N.D. Ohio (Federal)
GA	County of Gwinnett	1:18-op-45758	N.D. Ohio (Federal)
GA	County of Habersham	1:18-op-45559	N.D. Ohio (Federal)
GA	County of Hall	1:18-op-45286	N.D. Ohio (Federal)
GA	County of Hancock	1:18-op-45535	N.D. Ohio (Federal)
GA	County of Heard	1:19-op-45130	N.D. Ohio (Federal)
GA	County of Henry	1:18-op-46310	N.D. Ohio (Federal)
GA	County of Houston	1:18-op-45946	N.D. Ohio (Federal)
GA	County of Irwin	1:18-op-45283	N.D. Ohio (Federal)
GA	County of Jackson	1:18-op-45581	N.D. Ohio (Federal)
GA	County of Jasper	1:18-op-45504	N.D. Ohio (Federal)

State	Subdivision/Special District	Case No.	Jurisdiction
GA	County of Jeff Davis	1:18-op-45237	N.D. Ohio (Federal)
GA	County of Jefferson	1:19-op-45201	N.D. Ohio (Federal)
GA	County of Johnson	1:18-op-45716	N.D. Ohio (Federal)
GA	County of Jones	1:18-op-45424	N.D. Ohio (Federal)
GA	County of Lanier	1:18-op-46066	N.D. Ohio (Federal)
GA	County of Laurens	1:18-op-45945	N.D. Ohio (Federal)
GA	County of Lee	1:18-op-46171	N.D. Ohio (Federal)
GA	County of Liberty	1:19-op-45200	N.D. Ohio (Federal)
GA	County of Lincoln	1:18-op-45508	N.D. Ohio (Federal)
GA	County of Long	1:19-op-45196	N.D. Ohio (Federal)
GA	County of Lowndes	1:18-op-45835	N.D. Ohio (Federal)
GA	County of Lumpkin	1:19-op-45211	N.D. Ohio (Federal)
GA	County of Macon	1:18-op-45577	N.D. Ohio (Federal)
GA	County of Madison	1:18-op-45296	N.D. Ohio (Federal)
GA	County of McDuffie	1:18-op-45509	N.D. Ohio (Federal)
GA	County of McIntosh	1:19-op-45173	N.D. Ohio (Federal)
GA	County of Meriwether	1:19-op-45305	N.D. Ohio (Federal)
GA	County of Monroe	1:18-op-45672	N.D. Ohio (Federal)
GA	County of Montgomery	1:19-op-45292	N.D. Ohio (Federal)
GA	County of Newton	1:18-op-45578	N.D. Ohio (Federal)
GA	County of Oconee	1:18-op-45219	N.D. Ohio (Federal)
GA	County of Oglethorpe	1:18-op-45262	N.D. Ohio (Federal)
GA	County of Peach	1:18-op-45579	N.D. Ohio (Federal)
GA	County of Pierce	1:18-op-46107	N.D. Ohio (Federal)
GA	County of Pike	1:19-op-45179	N.D. Ohio (Federal)
GA	County of Polk	1:19-op-45046	N.D. Ohio (Federal)
GA	County of Pulaski	1:19-op-45176	N.D. Ohio (Federal)
GA	County of Rabun	1:19-op-45177	N.D. Ohio (Federal)
GA	County of Randolph	1:19-op-45202	N.D. Ohio (Federal)
GA	County of Rockdale	1:18-op-46296	N.D. Ohio (Federal)
GA	County of Schley	1:18-op-45580	N.D. Ohio (Federal)
GA	County of Screven	1:19-op-45198	N.D. Ohio (Federal)
GA	County of Seminole	1:19-op-45181	N.D. Ohio (Federal)
GA	County of Spalding	1:19-op-45208	N.D. Ohio (Federal)
GA	County of Stephens	1:19-op-45195	N.D. Ohio (Federal)
GA	County of Sumter	1:18-op-45250	N.D. Ohio (Federal)
GA	County of Taliaferro	1:18-op-45562	N.D. Ohio (Federal)
GA	County of Tattnall	1:18-op-45574	N.D. Ohio (Federal)
GA	County of Toombs	1:18-op-45576	N.D. Ohio (Federal)
GA	County of Towns	1:19-op-45172	N.D. Ohio (Federal)
GA	County of Troup	1:18-op-45715	N.D. Ohio (Federal)
GA	County of Twiggs	1:18-op-45379	N.D. Ohio (Federal)
GA	County of Union	1:18-op-46284	N.D. Ohio (Federal)
GA	County of Walton	1:18-op-45297	N.D. Ohio (Federal)
GA	County of Warren	1:18-op-45425	N.D. Ohio (Federal)
GA	County of Washington	1:18-op-45563	N.D. Ohio (Federal)
GA	County of Wayne	1:19-op-45204	N.D. Ohio (Federal)

State	Subdivision/Special District	Case No.	Jurisdiction
GA	County of Whitefield	1:18-op-45282	N.D. Ohio (Federal)
GA	County of Wilcox	1:18-op-45506	N.D. Ohio (Federal)
GA	County of Wilkes	1:19-op-45171	N.D. Ohio (Federal)
GA	County of Wilkinson	1:18-op-45671	N.D. Ohio (Federal)
GA	County of Worth	1:18-op-45602	N.D. Ohio (Federal)
GA	Dodge County Hospital Authority d/b/a Dodge County Hospital	1:18-op-45830	N.D. Ohio (Federal)
GA	Evans Memorial Hospital, Inc.	1:18-op-45826	N.D. Ohio (Federal)
GA	Gateway Community Service Board	1:20-op-45249	N.D. Ohio (Federal)
GA	Georgia Mountains Community Services d/b/a Avita Community Partners	1:20-op-45249	N.D. Ohio (Federal)
GA	Georgia Pines Community Service Board	1:20-op-45249	N.D. Ohio (Federal)
GA	Habersham County Medical Center	1:18-op-46114	N.D. Ohio (Federal)
GA	Highland Rivers Community Service Board d/b/a Highland Rivers Health	1:20-op-45249	N.D. Ohio (Federal)
GA	Hospital Authority of Bainbridge and Decatur County	1:18-op-45382	N.D. Ohio (Federal)
GA	Hospital Authority of Baxley County and Appling County d/b/a Appling Health Care System	1:18-op-46157	N.D. Ohio (Federal)
GA	Hospital Authority of Bleckley County d/b/a Bleckley Memorial Hospital	1:18-op-46170	N.D. Ohio (Federal)
GA	Lookout Mountain Community Service Board	1:20-op-45249	N.D. Ohio (Federal)
GA	Macon-Bibb County (Unified Government)	1:18-op-45407	N.D. Ohio (Federal)
GA	Middle Flint Area Community Service Board d/b/a Middle Flint Behavioral Healthcare	1:20-op-45249	N.D. Ohio (Federal)
GA	New Horizons Community Service Board	1:20-op-45249	N.D. Ohio (Federal)
GA	Pineland Behavioral Health and Developmental Disabilities CSB	1:20-op-45249	N.D. Ohio (Federal)
GA	River Edge Behavioral Health	1:20-op-45249	N.D. Ohio (Federal)
GA	Satilla Community Services d/b/a Unison Behavioral Health	1:20-op-45249	N.D. Ohio (Federal)
GA	Sheriff of Appling County (Sheriff Mark Melton)	1:19-op-45307	N.D. Ohio (Federal)
GA	Sheriff of Baldwin County (Sheriff William C. Massee, Jr.)	1:19-op-45361	N.D. Ohio (Federal)
GA	Sheriff of Bibb County (Sheriff David J. Davis)	1:19-op-45360	N.D. Ohio (Federal)
GA	Sheriff of Coffee County (Sheriff Doyle T. Wooten)	1:19-op-45145	N.D. Ohio (Federal)
GA	Sheriff of Crawford County (Sheriff Lewis S. Walker)	1:19-op-45146	N.D. Ohio (Federal)
GA	Sheriff of Crisp County (Sheriff H.W. "Billy" Hancock)	1:19-op-45562	N.D. Ohio (Federal)
GA	Sheriff of Glynn County (Sheriff E. Neal Jump)	1:19-op-45155	N.D. Ohio (Federal)
GA	Sheriff of Harris County (Sheriff Mike Jolley)	1:19-op-45147	N.D. Ohio (Federal)
GA	Sheriff of Houston County (Sheriff Cullen Talton)	1:19-op-45308	N.D. Ohio (Federal)
GA	Sheriff of Jeff Davis County (Sheriff Preston Bohannon)	1:19-op-45161	N.D. Ohio (Federal)
GA	Sheriff of Jones County (Sheriff R.N. "Butch" Reece)	1:19-op-45162	N.D. Ohio (Federal)

State	Subdivision/Special District	Case No.	Jurisdiction
GA	Sheriff of Laurens County (Sheriff Larry H. Dean)	1:19-op-45163	N.D. Ohio (Federal)
GA	Sheriff of Meriwether County (Sheriff Chuck Smith)	1:19-op-45306	N.D. Ohio (Federal)
GA	Sheriff of Murray County (Sheriff Gary Langford)	1:19-op-45164	N.D. Ohio (Federal)
GA	Sheriff of Oconee County (Sheriff Scott R. Berry)	1:19-op-45165	N.D. Ohio (Federal)
GA	Sheriff of Peach County (Sheriff Terry Deese)	1:19-op-45314	N.D. Ohio (Federal)
GA	Sheriff of Pierce County (Sheriff Ramsey Bennett)	1:19-op-45166	N.D. Ohio (Federal)
GA	Sheriff of Screven County (Sheriff Mike Kile)	1:19-op-45167	N.D. Ohio (Federal)
GA	Sheriff of Telfair County (Sheriff Chris Steverson)	1:19-op-45313	N.D. Ohio (Federal)
GA	Sheriff of Tift County (Sheriff Gene Scarbrough)	1:19-op-45168	N.D. Ohio (Federal)
GA	Sheriff of Ware County (Sheriff Randy F. Royal)	1:19-op-45169	N.D. Ohio (Federal)
GA	Sheriff of Wayne County (Sheriff John G. Carter)	1:19-op-45170	N.D. Ohio (Federal)
GA	The Candler County Hospital Authority	1:18-op-45167	N.D. Ohio (Federal)
GA	The Hospital Authority of Valdosta County and Lowndes County d/b/a South Georgia Medical Center	1:19-op-45133	N.D. Ohio (Federal)
GA	The Hospital Authority of Wayne County	1:19-op-45278	N.D. Ohio (Federal)
GA	View Point Health	1:20-op-45249	N.D. Ohio (Federal)
HI	County of Hawai'i	1:20-op-45014	N.D. Ohio (Federal)
HI	County of Kaua'i	1:19-op-45862	N.D. Ohio (Federal)
IA	County of Adair	1:18-op-45122	N.D. Ohio (Federal)
IA	County of Adams	1:18-op-45122	N.D. Ohio (Federal)
IA	County of Allamakee	1:18-op-45983	N.D. Ohio (Federal)
IA	County of Appanoose	1:21-op-45051	N.D. Ohio (Federal)
IA	County of Audubon	1:18-op-45122	N.D. Ohio (Federal)
IA	County of Benton	1:18-op-45122	N.D. Ohio (Federal)
IA	County of Black Hawk	1:18-op-45303	N.D. Ohio (Federal)
IA	County of Bremer	1:18-op-45122	N.D. Ohio (Federal)
IA	County of Buchanan	1:18-op-45122	N.D. Ohio (Federal)
IA	County of Buena Vista	1:18-op-45122	N.D. Ohio (Federal)
IA	County of Calhoun	1:18-op-45122	N.D. Ohio (Federal)
IA	County of Carroll	1:18-op-45122	N.D. Ohio (Federal)
IA	County of Cedar	1:18-op-45122	N.D. Ohio (Federal)
IA	County of Cerro Gordo	1:21-op-45051	N.D. Ohio (Federal)
IA	County of Cherokee	1:21-op-45051	N.D. Ohio (Federal)
IA	County of Chickasaw	1:21-op-45051	N.D. Ohio (Federal)
IA	County of Clay	1:18-op-45122	N.D. Ohio (Federal)
IA	County of Clayton	1:18-op-45122	N.D. Ohio (Federal)
IA	County of Clinton	1:18-op-45122	N.D. Ohio (Federal)
IA	County of Dallas	1:18-op-45122	N.D. Ohio (Federal)
IA	County of Delaware	1:18-op-45122	N.D. Ohio (Federal)
IA	County of Des Moines	1:18-op-45303	N.D. Ohio (Federal)

State	Subdivision/Special District	Case No.	Jurisdiction
IA	County of Emmet	1:21-op-45051	N.D. Ohio (Federal)
IA	County of Fayette	1:18-op-45122	N.D. Ohio (Federal)
IA	County of Fremont	1:21-op-45051	N.D. Ohio (Federal)
IA	County of Hamilton	1:18-op-45122	N.D. Ohio (Federal)
IA	County of Hancock	1:21-op-45051	N.D. Ohio (Federal)
IA	County of Hardin	1:18-op-45122	N.D. Ohio (Federal)
IA	County of Harrison	1:18-op-45303	N.D. Ohio (Federal)
IA	County of Henry	1:21-op-45051	N.D. Ohio (Federal)
IA	County of Howard	1:18-op-45303	N.D. Ohio (Federal)
IA	County of Humboldt	1:18-op-45122	N.D. Ohio (Federal)
IA	County of Ida	1:21-op-45051	N.D. Ohio (Federal)
IA	County of Jasper	1:18-op-45303	N.D. Ohio (Federal)
IA	County of Johnson	1:18-op-45122	N.D. Ohio (Federal)
IA	County of Jones	1:21-op-45051	N.D. Ohio (Federal)
IA	County of Keokuk	1:21-op-45051	N.D. Ohio (Federal)
IA	County of Lee	1:18-op-45122	N.D. Ohio (Federal)
IA	County of Lyon	1:18-op-45303	N.D. Ohio (Federal)
IA	County of Madison	1:21-op-45051	N.D. Ohio (Federal)
IA	County of Mahaska	1:18-op-45122	N.D. Ohio (Federal)
IA	County of Marion	1:18-op-45122	N.D. Ohio (Federal)
IA	County of Mills	1:18-op-45303	N.D. Ohio (Federal)
IA	County of Mitchell	1:18-op-45122	N.D. Ohio (Federal)
IA	County of Monroe	1:18-op-45122	N.D. Ohio (Federal)
IA	County of Montgomery	1:18-op-45122	N.D. Ohio (Federal)
IA	County of Muscatine	1:21-op-45051	N.D. Ohio (Federal)
IA	County of O'Brien	1:18-op-45122	N.D. Ohio (Federal)
IA	County of Osceola	1:21-op-45051	N.D. Ohio (Federal)
IA	County of Plymouth	1:18-op-45122	N.D. Ohio (Federal)
IA	County of Pocahontas	1:21-op-45051	N.D. Ohio (Federal)
IA	County of Polk	1:18-op-45116	N.D. Ohio (Federal)
IA	County of Pottawattamie	1:18-op-45122	N.D. Ohio (Federal)
IA	County of Poweshiek	1:21-op-45051	N.D. Ohio (Federal)
IA	County of Sac	1:18-op-45122	N.D. Ohio (Federal)
IA	County of Scott	1:18-op-45122	N.D. Ohio (Federal)
IA	County of Shelby	1:18-op-45122	N.D. Ohio (Federal)
IA	County of Sioux	1:18-op-45122	N.D. Ohio (Federal)
IA	County of Tama	1:18-op-45303	N.D. Ohio (Federal)
IA	County of Taylor	1:18-op-45122	N.D. Ohio (Federal)
IA	County of Union	1:18-op-45303	N.D. Ohio (Federal)
IA	County of Webster	1:21-op-45051	N.D. Ohio (Federal)
IA	County of Winnebago	1:21-op-45051	N.D. Ohio (Federal)
IA	County of Winneshiek	1:18-op-45122	N.D. Ohio (Federal)
IA	County of Worth	1:18-op-45303	N.D. Ohio (Federal)
IA	County of Wright	1:21-op-45051	N.D. Ohio (Federal)
ID	City of Boise	1:18-op-46289	N.D. Ohio (Federal)
ID	City of Chubbuck	1:19-op-45729	N.D. Ohio (Federal)
ID	City of Pocatello	1:19-op-45578	N.D. Ohio (Federal)

State	Subdivision/Special District	Case No.	Jurisdiction
ID	City of Preston	1:19-op-45067	N.D. Ohio (Federal)
ID	City of Twin Falls	1:19-op-45743	N.D. Ohio (Federal)
ID	County of Ada	1:19-op-45775	N.D. Ohio (Federal)
ID	County of Adams	1:18-op-46062	N.D. Ohio (Federal)
ID	County of Bannock	1:19-op-45359	N.D. Ohio (Federal)
ID	County of Bingham	1:19-op-45758	N.D. Ohio (Federal)
ID	County of Blaine	1:18-op-46062	N.D. Ohio (Federal)
ID	County of Boise	1:18-op-46062	N.D. Ohio (Federal)
ID	County of Bonneville	1:18-op-46062	N.D. Ohio (Federal)
ID	County of Camas	1:19-op-45407	N.D. Ohio (Federal)
ID	County of Canyon	1:18-op-46277	N.D. Ohio (Federal)
ID	County of Caribou	1:18-op-46062	N.D. Ohio (Federal)
ID	County of Cassia	1:18-op-46062	N.D. Ohio (Federal)
ID	County of Elmore	1:18-op-46062	N.D. Ohio (Federal)
ID	County of Gooding	1:19-op-45404	N.D. Ohio (Federal)
ID	County of Latah	1:18-op-46062	N.D. Ohio (Federal)
ID	County of Minidoka	1:18-op-46062	N.D. Ohio (Federal)
ID	County of Owyhee	1:18-op-46062	N.D. Ohio (Federal)
ID	County of Payette	1:18-op-46062	N.D. Ohio (Federal)
ID	County of Twin Falls	1:19-op-45828	N.D. Ohio (Federal)
IL	Board of Education of East Aurora, School District 131	1:20-op-45281	N.D. Ohio (Federal)
IL	Board of Education of Joliet Township High School, District 204	1:20-op-45281	N.D. Ohio (Federal)
IL	Board of Education of Thornton Fractional Township High Schools, District 215	1:20-op-45281	N.D. Ohio (Federal)
IL	Board of Education of Thornton Township High Schools, District 205	1:20-op-45281	N.D. Ohio (Federal)
IL	City of Berwyn	1:18-op-46312	N.D. Ohio (Federal)
IL	City of Chicago	1:14-cv-04361	N.D. Illinois (Federal)
IL	City of Chicago Heights	1:18-op-46312	N.D. Ohio (Federal)
IL	City of Granite City	2018-L-010351	MDL - In re Opioid Litigation (IL - Circuit Court of Cook County) (State MDL)
IL	City of Harrisburg	1:18-op-45594	N.D. Ohio (Federal)
IL	City of Harvey	1:18-op-46335	N.D. Ohio (Federal)
IL	City of Herrin	1:20-op-45192	N.D. Ohio (Federal)
IL	City of Kankakee	1:21-op-45018	N.D. Ohio (Federal)
IL	City of Marion	1:20-op-45215	N.D. Ohio (Federal)
IL	City of Metropolis	1:18-op-45537	N.D. Ohio (Federal)
IL	City of Northlake	1:18-op-46312	N.D. Ohio (Federal)
IL	City of Pekin	1:18-op-46312	N.D. Ohio (Federal)
IL	City of Peoria	1:18-op-46335	N.D. Ohio (Federal)
IL	City of Princeton	1:18-op-45599	N.D. Ohio (Federal)
IL	City of Rockford	1:18-op-45309	N.D. Ohio (Federal)
IL	City of Streator	1:21-op-45018	N.D. Ohio (Federal)
IL	City of West Frankfort	1:20-op-45191	N.D. Ohio (Federal)
IL	County of Alexander	1:17-op-45050	N.D. Ohio (Federal)
IL	County of Bond	1:18-op-45004	N.D. Ohio (Federal)

State	Subdivision/Special District	Case No.	Jurisdiction
IL	County of Calhoun	1:18-op-46294	N.D. Ohio (Federal)
IL	County of Christian	1:17-op-45078	N.D. Ohio (Federal)
IL	County of Coles	1:18-op-45138	N.D. Ohio (Federal)
IL	County of Edwards	1:18-op-45049	N.D. Ohio (Federal)
IL	County of Effingham	1:18-op-45499	N.D. Ohio (Federal)
IL	County of Franklin	1:20-op-45194	N.D. Ohio (Federal)
IL	County of Gallatin	1:17-op-45152	N.D. Ohio (Federal)
IL	County of Hamilton	1:17-op-45157	N.D. Ohio (Federal)
IL	County of Hardin	1:18-op-45003	N.D. Ohio (Federal)
IL	County of Jasper	1:18-op-45026	N.D. Ohio (Federal)
IL	County of Jefferson	1:18-op-45539	N.D. Ohio (Federal)
IL	County of Jersey	2018-L-003908	MDL - In re Opioid Litigation (IL - Circuit Court of Cook County) (State MDL)
IL	County of Johnson	1:18-op-46148	N.D. Ohio (Federal)
IL	County of LaSalle	2019-L-008722	MDL - In re Opioid Litigation (IL - Circuit Court of Cook County) (State MDL)
IL	County of Lawrence	1:18-op-45518	N.D. Ohio (Federal)
IL	County of Lee	1:18-op-45606	N.D. Ohio (Federal)
IL	County of Livingston	1:18-op-45527	N.D. Ohio (Federal)
IL	County of Marion	1:18-op-45532	N.D. Ohio (Federal)
IL	County of Massac	1:18-op-45519	N.D. Ohio (Federal)
IL	County of McLean	2019-L-013365	MDL - In re Opioid Litigation (IL - Circuit Court of Cook County) (State MDL)
IL	County of Pulaski	1:17-op-45158	N.D. Ohio (Federal)
IL	County of Saline	1:18-op-45528	N.D. Ohio (Federal)
IL	County of Sangamon	1:20-op-45154	N.D. Ohio (Federal)
IL	County of Schuyler	1:18-op-46147	N.D. Ohio (Federal)
IL	County of Shelby	1:18-op-45007	N.D. Ohio (Federal)
IL	County of Union	1:19-op-45286	N.D. Ohio (Federal)
IL	County of Wabash	1:17-op-45103	N.D. Ohio (Federal)
IL	County of Washington	1:17-op-45151	N.D. Ohio (Federal)
IL	County of White	1:18-op-45024	N.D. Ohio (Federal)
IL	County of Winnebago	1:18-op-45310	N.D. Ohio (Federal)
IL	Orland Fire Protection District	1:18-op-46335	N.D. Ohio (Federal)
IL	The Board of Education of the City of Chicago, School District No. 299	1:19-op-46042	N.D. Ohio (Federal)
IL	Village of Addison	1:21-op-45018	N.D. Ohio (Federal)
IL	Village of Bellwood	1:18-op-46312	N.D. Ohio (Federal)
IL	Village of Bensenville	1:21-op-45018	N.D. Ohio (Federal)
IL	Village of Berkeley	1:18-op-46312	N.D. Ohio (Federal)
IL	Village of Bolingbrook	1:21-op-45018	N.D. Ohio (Federal)
IL	Village of Broadview	1:18-op-46335	N.D. Ohio (Federal)
IL	Village of Chicago Ridge	1:18-op-46335	N.D. Ohio (Federal)
IL	Village of Dolton	1:18-op-46335	N.D. Ohio (Federal)
IL	Village of Forest Park	1:21-op-45018	N.D. Ohio (Federal)
IL	Village of Franklin Park	1:21-op-45018	N.D. Ohio (Federal)
IL	Village of Harwood Heights	1:21-op-45018	N.D. Ohio (Federal)
IL	Village of Hillside	1:18-op-46312	N.D. Ohio (Federal)

State	Subdivision/Special District	Case No.	Jurisdiction
IL	Village of Hoffman Estates	1:18-op-46335	N.D. Ohio (Federal)
IL	Village of La Grange Park	1:21-op-45018	N.D. Ohio (Federal)
IL	Village of Maywood	1:18-op-46335	N.D. Ohio (Federal)
IL	Village of McCook	1:21-op-45018	N.D. Ohio (Federal)
IL	Village of Melrose Park	1:18-op-46312	N.D. Ohio (Federal)
IL	Village of Merrionette Park	1:18-op-46335	N.D. Ohio (Federal)
IL	Village of North Riverside	1:18-op-46335	N.D. Ohio (Federal)
IL	Village of Oak Lawn	1:18-op-46312	N.D. Ohio (Federal)
IL	Village of Oak Park	1:21-op-45018	N.D. Ohio (Federal)
IL	Village of Orland Park	1:18-op-46335	N.D. Ohio (Federal)
IL	Village of Posen	1:18-op-46335	N.D. Ohio (Federal)
IL	Village of River Forest	1:18-op-46312	N.D. Ohio (Federal)
IL	Village of River Grove	1:18-op-46335	N.D. Ohio (Federal)
IL	Village of Riverside	1:21-op-45018	N.D. Ohio (Federal)
IL	Village of Schiller Park	1:21-op-45018	N.D. Ohio (Federal)
IL	Village of Stone Park	1:18-op-46335	N.D. Ohio (Federal)
IL	Village of Tinley Park	1:18-op-46312	N.D. Ohio (Federal)
IL	Waukegan Community Unit School District	2020-70878 / 2018-63587 (master) / 1:21-op-45080	MDL - In re Texas Opioid Litigation (TX - 152nd Judicial District of Harris County) (State MDL) / N.D. Ohio (Federal)
IN	City of Alexandria	1:18-op-45151	N.D. Ohio (Federal)
IN	City of Beech Grove	1:18-op-46103	N.D. Ohio (Federal)
IN	City of Bloomington	1:18-op-45235	N.D. Ohio (Federal)
IN	City of Connersville	1:18-op-45159	N.D. Ohio (Federal)
IN	City of Elwood	1:18-op-45151	N.D. Ohio (Federal)
IN	City of Evansville	1:18-op-45591	N.D. Ohio (Federal)
IN	City of Fishers	1:18-op-45845	N.D. Ohio (Federal)
IN	City of Fort Wayne	1:18-op-45123	N.D. Ohio (Federal)
IN	City of Franklin	1:18-op-46182	N.D. Ohio (Federal)
IN	City of Gary	1:18-op-45929	N.D. Ohio (Federal)
IN	City of Greenwood	1:18-op-45109	N.D. Ohio (Federal)
IN	City of Hammond	1:17-op-45082	N.D. Ohio (Federal)
IN	City of Hartford	1:18-op-45854	N.D. Ohio (Federal)
IN	City of Huntington	1:18-op-46357	N.D. Ohio (Federal)
IN	City of Indianapolis	1:17-op-45091	N.D. Ohio (Federal)
IN	City of Jasper	1:18-op-46027	N.D. Ohio (Federal)
IN	City of Jeffersonville	1:18-op-45961	N.D. Ohio (Federal)
IN	City of Kokomo	1:18-op-45127	N.D. Ohio (Federal)
IN	City of Lafayette	1:17-op-45081	N.D. Ohio (Federal)
IN	City of Lawrence	1:18-op-45805	N.D. Ohio (Federal)
IN	City of Logansport	1:18-op-45692	N.D. Ohio (Federal)
IN	City of Martinsville	1:18-op-45346	N.D. Ohio (Federal)
IN	City of Mishawaka	2020-70878 / 2018-63587 (master) / 1:21-op-45080	MDL - In re Texas Opioid Litigation (TX - 152nd Judicial District of Harris County) (State MDL) / N.D. Ohio (Federal)
IN	City of Montpelier	1:18-op-45806	N.D. Ohio (Federal)
IN	City of Muncie	1:18-op-45126	N.D. Ohio (Federal)
IN	City of New Albany	1:18-op-46333	N.D. Ohio (Federal)

State	Subdivision/Special District	Case No.	Jurisdiction
IN	City of New Castle	1:18-op-45016	N.D. Ohio (Federal)
IN	City of Noblesville	1:18-op-45124	N.D. Ohio (Federal)
IN	City of Peru	1:18-op-45794	N.D. Ohio (Federal)
IN	City of Portland	1:18-op-46140	N.D. Ohio (Federal)
IN	City of Richmond	1:18-op-46182	N.D. Ohio (Federal)
IN	City of Seymour	1:18-op-45673	N.D. Ohio (Federal)
IN	City of Shelbyville	1:18-op-45960	N.D. Ohio (Federal)
IN	City of South Bend	1:18-op-45400	N.D. Ohio (Federal)
IN	City of Terre Haute	1:18-op-45129	N.D. Ohio (Federal)
IN	City of West LaFayette	1:18-op-45300	N.D. Ohio (Federal)
IN	City of Westfield	1:18-op-46056	N.D. Ohio (Federal)
IN	County of Allen (Board of Commissioners)	1:18-op-45121	N.D. Ohio (Federal)
IN	County of Benton	1:18-op-46201	N.D. Ohio (Federal)
IN	County of Blackford	1:18-op-46336	N.D. Ohio (Federal)
IN	County of Delaware	1:18-op-45963	N.D. Ohio (Federal)
IN	County of Fayette	1:18-op-45159	N.D. Ohio (Federal)
IN	County of Franklin (Board of Commissioners)	1:18-op-45827	N.D. Ohio (Federal)
IN	County of Harrison	1:18-op-45130	N.D. Ohio (Federal)
IN	County of Howard	1:18-op-45172	N.D. Ohio (Federal)
IN	County of Jackson	1:18-op-45439	N.D. Ohio (Federal)
IN	County of Jay	1:18-op-46140	N.D. Ohio (Federal)
IN	County of Jennings	1:18-op-45131	N.D. Ohio (Federal)
IN	County of Lake	1:18-op-45156	N.D. Ohio (Federal)
IN	County of LaPorte	1:18-op-45280	N.D. Ohio (Federal)
IN	County of Lawrence	1:18-op-46188	N.D. Ohio (Federal)
IN	County of Madison	1:18-op-45151	N.D. Ohio (Federal)
IN	County of Marion	1:17-op-45091	N.D. Ohio (Federal)
IN	County of Marshall	1:18-op-45157	N.D. Ohio (Federal)
IN	County of Monroe	1:18-op-45235	N.D. Ohio (Federal)
IN	County of Morgan	1:18-op-45828	N.D. Ohio (Federal)
IN	County of Orange	1:19-op-45356	N.D. Ohio (Federal)
IN	County of Ozaukee	1:18-op-45117	N.D. Ohio (Federal)
IN	County of Pepin	1:18-op-45117	N.D. Ohio (Federal)
IN	County of Portage	1:18-op-45117	N.D. Ohio (Federal)
IN	County of Porter	1:19-op-45074	N.D. Ohio (Federal)
IN	County of Pulaski	1:18-op-46110	N.D. Ohio (Federal)
IN	County of Racine	1:18-op-45117	N.D. Ohio (Federal)
IN	County of Richland	1:18-op-45117	N.D. Ohio (Federal)
IN	County of Ripley	1:18-op-46155	N.D. Ohio (Federal)
IN	County of St. Joseph	1:18-op-45500	N.D. Ohio (Federal)
IN	County of Starke	1:18-op-46358	N.D. Ohio (Federal)
IN	County of Tippecanoe	1:18-op-45796	N.D. Ohio (Federal)
IN	County of Vanderburgh	1:18-op-45498	N.D. Ohio (Federal)
IN	County of Vigo	1:18-op-45128	N.D. Ohio (Federal)
IN	County of Winnebago	1:18-op-45117	N.D. Ohio (Federal)
IN	Fort Wayne Community Schools	1:21-op-45080	N.D. Ohio (Federal)
IN	Penn-Harris-Madison School Corporation	1:21-op-45080	N.D. Ohio (Federal)

State	Subdivision/Special District	Case No.	Jurisdiction
IN	School City of Mishawaka	2020-70878 / 2018-63587 (master) / 1:21-op-45080	MDL - In re Texas Opioid Litigation (TX - 152nd Judicial District of Harris County) (State MDL) / N.D. Ohio (Federal)
IN	Scott County (Board of Commissioners)	1:17-op-45094	N.D. Ohio (Federal)
IN	Smith-Green Community Schools	2020-70878 / 2018-63587 (master) / 1:21-op-45080	MDL - In re Texas Opioid Litigation (TX - 152nd Judicial District of Harris County) (State MDL) / N.D. Ohio (Federal)
IN	South Bend Community School Corporation	2020-70878 / 2018-63587 (master) / 1:21-op-45080	MDL - In re Texas Opioid Litigation (TX - 152nd Judicial District of Harris County) (State MDL) / N.D. Ohio (Federal)
IN	Town of Atlanta	1:18-op-45125	N.D. Ohio (Federal)
IN	Town of Brownstown	1:18-op-45666	N.D. Ohio (Federal)
IN	Town of Chandler	1:18-op-45440	N.D. Ohio (Federal)
IN	Town of Danville	1:19-op-45215	N.D. Ohio (Federal)
IN	Town of Mooresville	1:19-op-45016	N.D. Ohio (Federal)
IN	Town of Pendleton	1:18-op-46182	N.D. Ohio (Federal)
IN	Town of Plainfield	1:19-op-45017	N.D. Ohio (Federal)
IN	Town of Sheridan	1:18-op-45055	N.D. Ohio (Federal)
IN	Town of Upland	1:18-op-46356	N.D. Ohio (Federal)
IN	Town of Zionsville	1:18-op-45846	N.D. Ohio (Federal)
KS	City of Kansas	1:19-op-45015	N.D. Ohio (Federal)
KS	City of Overland Park	1:18-op-46287	N.D. Ohio (Federal)
KS	County of Bourbon	1:18-op-45781	N.D. Ohio (Federal)
KS	County of Cherokee (Board of Commissioners)	1:18-op-45452	N.D. Ohio (Federal)
KS	County of Cowley (Board of County Commissioners)	1:18-op-45898	N.D. Ohio (Federal)
KS	County of Crawford (Board of County Commissioners)	1:18-op-46108	N.D. Ohio (Federal)
KS	County of Ford (Board of County Commissioners)	1:20-op-45263	N.D. Ohio (Federal)
KS	County of Harvey	1:18-op-45848	N.D. Ohio (Federal)
KS	County of Johnson	1:19-op-45443	N.D. Ohio (Federal)
KS	County of Montgomery	1:18-op-45780	N.D. Ohio (Federal)
KS	County of Neosho (Board of County Commissioners)	1:18-op-46125	N.D. Ohio (Federal)
KS	County of Pratt (Board of Commissioners)	1:18-op-45451	N.D. Ohio (Federal)
KS	County of Reno	1:18-op-45718	N.D. Ohio (Federal)
KS	County of Sedgwick (Board of County Commissioners)	1:18-op-45025	N.D. Ohio (Federal)
KS	County of Shawnee (Board of County Commissioners)	1:20-op-45226	N.D. Ohio (Federal)
KS	County of Wyandotte	1:19-op-45015	N.D. Ohio (Federal)
KS	Leavenworth County (Board of Commissioners)	1:19-op-45602	N.D. Ohio (Federal)
KY	Board of Education of Breathitt County Public Schools	1:20-op-45281	N.D. Ohio (Federal)
KY	Board of Education of Bullitt County Public Schools	1:20-op-45281	N.D. Ohio (Federal)
KY	Board of Education of Estill County Public Schools	1:20-op-45281	N.D. Ohio (Federal)
KY	Board of Education of Fayette County Public	1:20-op-45281	N.D. Ohio (Federal)

State	Subdivision/Special District	Case No.	Jurisdiction
	Schools		
KY	Board of Education of Harrison County Public Schools	1:20-op-45281	N.D. Ohio (Federal)
KY	Board of Education of Hart County Public Schools	1:20-op-45281	N.D. Ohio (Federal)
KY	Board of Education of Jefferson County Public Schools	1:20-op-45281	N.D. Ohio (Federal)
KY	Board of Education of Johnson County Public School District	1:20-op-45281	N.D. Ohio (Federal)
KY	Board of Education of LaRue County Public Schools	1:20-op-45281	N.D. Ohio (Federal)
KY	Board of Education of Lawrence County Public Schools	1:20-op-45281	N.D. Ohio (Federal)
KY	Board of Education of Martin County Public Schools	1:20-op-45281	N.D. Ohio (Federal)
KY	Board of Education of Menifee County Public Schools	1:20-op-45281	N.D. Ohio (Federal)
KY	Board of Education of Owsley County Public Schools	1:20-op-45281	N.D. Ohio (Federal)
KY	Board of Education of Wolfe County Public Schools	1:20-op-45281	N.D. Ohio (Federal)
KY	City of Bellefonte	1:21-op-45094	N.D. Ohio (Federal)
KY	City of Benham	1:19-op-45105	N.D. Ohio (Federal)
KY	City of Buckhorn	1:19-op-45111	N.D. Ohio (Federal)
KY	City of Campbellsville	1:19-op-46057	N.D. Ohio (Federal)
KY	City of Columbia	1:19-op-46129	N.D. Ohio (Federal)
KY	City of Covington	1:18-op-45967	N.D. Ohio (Federal)
KY	City of Florence	1:19-op-45084	N.D. Ohio (Federal)
KY	City of Grayson	1:19-op-45085	N.D. Ohio (Federal)
KY	City of Greenup	1:21-op-45094	N.D. Ohio (Federal)
KY	City of Harlan	1:19-op-45106	N.D. Ohio (Federal)
KY	City of Henderson	1:20-op-45062	N.D. Ohio (Federal)
KY	City of Hillview	2020-70878 / 2018-63587 (master) / 1:21-op-45080	MDL - In re Texas Opioid Litigation (TX - 152nd Judicial District of Harris County) (State MDL) / N.D. Ohio (Federal)
KY	City of Hyden	1:19-op-45101	N.D. Ohio (Federal)
KY	City of Inez	1:19-op-45499	N.D. Ohio (Federal)
KY	City of Jamestown	1:19-op-46096	N.D. Ohio (Federal)
KY	City of Jenkins	1:21-op-45094	N.D. Ohio (Federal)
KY	City of London	1:19-op-45103	N.D. Ohio (Federal)
KY	City of Loyall	1:19-op-45107	N.D. Ohio (Federal)
KY	City of Lynch	1:19-op-45102	N.D. Ohio (Federal)
KY	City of Manchester	1:19-op-45138	N.D. Ohio (Federal)
KY	City of Morehead	1:19-op-45104	N.D. Ohio (Federal)
KY	City of Morganfield	1:20-op-45167	N.D. Ohio (Federal)
KY	City of Mt. Washington	2020-70878 / 2018-63587 (master) / 1:21-op-45080	MDL - In re Texas Opioid Litigation (TX - 152nd Judicial District of Harris County) (State MDL) / N.D. Ohio (Federal)
KY	City of Murray	1:20-op-45038	N.D. Ohio (Federal)
KY	City of Owensboro	1:21-op-45076	N.D. Ohio (Federal)

State	Subdivision/Special District	Case No.	Jurisdiction
KY	City of Paducah	1:18-op-45592	N.D. Ohio (Federal)
KY	City of Paintsville	1:19-op-45559	N.D. Ohio (Federal)
KY	City of Pineville	1:21-op-45094	N.D. Ohio (Federal)
KY	City of Pippa Passes	1:19-op-45137	N.D. Ohio (Federal)
KY	City of Prestonburg	1:19-op-45294	N.D. Ohio (Federal)
KY	City of Russell	1:21-op-45094	N.D. Ohio (Federal)
KY	City of Russell Springs	1:20-op-45125	N.D. Ohio (Federal)
KY	City of Shepherdsville	2020-70878 / 2018-63587 (master) / 1:21-op-45080	MDL - In re Texas Opioid Litigation (TX - 152nd Judicial District of Harris County) (State MDL) / N.D. Ohio (Federal)
KY	City of South Shore	1:21-op-45094	N.D. Ohio (Federal)
KY	City of Vanceburg	1:21-op-45094	N.D. Ohio (Federal)
KY	City of Warfield	1:19-op-45787	N.D. Ohio (Federal)
KY	City of West Liberty	1:19-op-45329	N.D. Ohio (Federal)
KY	City of Whitesburg	1:19-op-45218	N.D. Ohio (Federal)
KY	City of Winchester	1:18-op-46348	N.D. Ohio (Federal)
KY	City of Worthington	1:21-op-45094	N.D. Ohio (Federal)
KY	County of Adair (Fiscal Court)	1:20-op-45059	N.D. Ohio (Federal)
KY	County of Allen (Fiscal Court)	1:18-op-45008	N.D. Ohio (Federal)
KY	County of Anderson (Fiscal Court)	1:17-op-45006	N.D. Ohio (Federal)
KY	County of Ballard	1:18-op-45593	N.D. Ohio (Federal)
KY	County of Bath (Fiscal Court)	1:20-op-45012	N.D. Ohio (Federal)
KY	County of Bell (Fiscal Court)	1:17-op-45026	N.D. Ohio (Federal)
KY	County of Boone (Fiscal Court)	1:17-op-45020	N.D. Ohio (Federal)
KY	County of Bourbon (Fiscal Court)	1:18-op-45533	N.D. Ohio (Federal)
KY	County of Boyd (Fiscal Court)	1:17-op-45084	N.D. Ohio (Federal)
KY	County of Boyle (Fiscal Court)	1:17-op-45018	N.D. Ohio (Federal)
KY	County of Bracken (Fiscal Court)	1:18-op-45395	N.D. Ohio (Federal)
KY	County of Breathitt (Fiscal Court)	1:19-op-46082	N.D. Ohio (Federal)
KY	County of Breckinridge (Fiscal Court)	1:18-op-46273 / 1:20-op-45063	N.D. Ohio (Federal)
KY	County of Bullitt (Fiscal Court)	1:18-op-45009	N.D. Ohio (Federal)
KY	County of Caldwell (Fiscal Court)	1:19-op-46001	N.D. Ohio (Federal)
KY	County of Calloway (Fiscal Court)	1:20-op-45038	N.D. Ohio (Federal)
KY	County of Campbell (Fiscal Court)	1:17-op-45022	N.D. Ohio (Federal)
KY	County of Carlisle (Fiscal Court)	1:17-op-45016	N.D. Ohio (Federal)
KY	County of Carter (Fiscal Court)	1:18-op-45392	N.D. Ohio (Federal)
KY	County of Casey (Fiscal Court)	1:19-op-45887	N.D. Ohio (Federal)
KY	County of Christian (Fiscal Court)	1:17-op-45070	N.D. Ohio (Federal)
KY	County of Clark (Fiscal Court)	1:17-op-45172	N.D. Ohio (Federal)
KY	County of Clay (Fiscal Court)	1:17-op-45031	N.D. Ohio (Federal)
KY	County of Clinton (Fiscal Court)	1:19-op-45901	N.D. Ohio (Federal)
KY	County of Cumberland (Fiscal Court)	1:17-op-45012	N.D. Ohio (Federal)
KY	County of Daviess (Fiscal Court)	1:19-op-46171	N.D. Ohio (Federal)
KY	County of Edmonson (Fiscal Court)	1:20-op-45084	N.D. Ohio (Federal)
KY	County of Elliott (Fiscal Court)	1:18-op-45393	N.D. Ohio (Federal)
KY	County of Estill (Fiscal Court)	1:18-op-46126	N.D. Ohio (Federal)

State	Subdivision/Special District	Case No.	Jurisdiction
KY	County of Fleming (Fiscal Court)	1:17-op-45019	N.D. Ohio (Federal)
KY	County of Floyd	1:18-op-45369	N.D. Ohio (Federal)
KY	County of Franklin (Fiscal Court)	1:17-op-45007	N.D. Ohio (Federal)
KY	County of Fulton (Fiscal Court)	1:20-op-45045	N.D. Ohio (Federal)
KY	County of Gallatin (Fiscal Court)	1:19-op-45891	N.D. Ohio (Federal)
KY	County of Garrard (Fiscal Court)	1:17-op-45023	N.D. Ohio (Federal)
KY	County of Grant (Fiscal Court)	1:19-op-45961	N.D. Ohio (Federal)
KY	County of Green (Fiscal Court)	1:18-op-46272 / 1:20-op-45063	N.D. Ohio (Federal)
KY	County of Greenup (Fiscal Court)	1:17-op-45088	N.D. Ohio (Federal)
KY	County of Hancock (Fiscal Court)	1:19-op-46027	N.D. Ohio (Federal)
KY	County of Harlan (Fiscal Court)	1:17-op-45027	N.D. Ohio (Federal)
KY	County of Harrison (Fiscal Court)	1:19-op-46030	N.D. Ohio (Federal)
KY	County of Hart (Fiscal Court)	1:19-op-45994	N.D. Ohio (Federal)
KY	County of Henderson (Fiscal Court)	1:17-op-45069	N.D. Ohio (Federal)
KY	County of Henry (Fiscal Court)	1:17-op-45010	N.D. Ohio (Federal)
KY	County of Hickman (Fiscal Court)	1:20-op-45254	N.D. Ohio (Federal)
KY	County of Hopkins (Fiscal Court)	1:18-op-45010	N.D. Ohio (Federal)
KY	County of Jessamine (Fiscal Court)	1:17-op-45090	N.D. Ohio (Federal)
KY	County of Kenton (Fiscal Court)	1:17-op-45089	N.D. Ohio (Federal)
KY	County of Knott	1:18-op-45370	N.D. Ohio (Federal)
KY	County of Knox (Fiscal Court)	1:17-op-45028	N.D. Ohio (Federal)
KY	County of LaRue (Fiscal Court)	1:19-op-45950	N.D. Ohio (Federal)
KY	County of Laurel (Fiscal Court)	1:17-op-45105	N.D. Ohio (Federal)
KY	County of Lawrence	1:19-op-46184	N.D. Ohio (Federal)
KY	County of Lee (Fiscal Court)	1:18-op-46100	N.D. Ohio (Federal)
KY	County of Leslie (Fiscal Court)	1:17-op-45029	N.D. Ohio (Federal)
KY	County of Letcher (Fiscal Court)	1:18-op-46124	N.D. Ohio (Federal)
KY	County of Lewis (Fiscal Court)	1:19-op-45889	N.D. Ohio (Federal)
KY	County of Lincoln (Fiscal Court)	1:17-op-45024	N.D. Ohio (Federal)
KY	County of Logan (Fiscal Court)	1:19-op-45951	N.D. Ohio (Federal)
KY	County of Madison (Fiscal Court)	1:17-op-45011	N.D. Ohio (Federal)
KY	County of Marshall (Fiscal Court)	1:17-op-45071	N.D. Ohio (Federal)
KY	County of Martin (Fiscal Court)	1:18-op-45388	N.D. Ohio (Federal)
KY	County of Mason (Fiscal Court)	1:19-op-45868	N.D. Ohio (Federal)
KY	County of McCracken	1:18-op-45611	N.D. Ohio (Federal)
KY	County of McLean (Fiscal Court)	1:20-op-45200	N.D. Ohio (Federal)
KY	County of Meade (Fiscal Court)	1:18-op-46275 / 1:20-op-45063	N.D. Ohio (Federal)
KY	County of Mercer (Fiscal Court)	1:19-op-45952	N.D. Ohio (Federal)
KY	County of Monroe (Fiscal Court)	1:20-op-45016	N.D. Ohio (Federal)
KY	County of Montgomery (Fiscal Court)	1:18-op-46144	N.D. Ohio (Federal)
KY	County of Morgan (Fiscal Court)	1:19-op-45571	N.D. Ohio (Federal)
KY	County of Muhlenberg (Fiscal Court)	1:19-op-46053	N.D. Ohio (Federal)
KY	County of Nicholas (Fiscal Court)	1:17-op-45025	N.D. Ohio (Federal)
KY	County of Ohio (Fiscal Court)	1:20-op-45063	N.D. Ohio (Federal)
KY	County of Oldham (Fiscal Court)	1:17-op-45067	N.D. Ohio (Federal)

State	Subdivision/Special District	Case No.	Jurisdiction
KY	County of Owen (Fiscal Court)	1:18-op-45534	N.D. Ohio (Federal)
KY	County of Owsley (Fiscal Court)	1:18-op-46235	N.D. Ohio (Federal)
KY	County of Pendleton (Fiscal Court)	1:17-op-45021	N.D. Ohio (Federal)
KY	County of Perry (Fiscal Court)	1:17-op-45110	N.D. Ohio (Federal)
KY	County of Pike	1:18-op-45368	N.D. Ohio (Federal)
KY	County of Powell (Fiscal Court)	1:18-op-46145	N.D. Ohio (Federal)
KY	County of Pulaski (Fiscal Court)	1:17-op-45109	N.D. Ohio (Federal)
KY	County of Rowan (Fiscal Court)	1:18-op-45018	N.D. Ohio (Federal)
KY	County of Russell (Fiscal Court)	1:19-op-46096	N.D. Ohio (Federal)
KY	County of Scott (Fiscal Court)	1:17-op-45173	N.D. Ohio (Federal)
KY	County of Shelby (Fiscal Court)	1:17-op-45009	N.D. Ohio (Federal)
KY	County of Spencer (Fiscal Court)	1:17-op-45014 / 1:19-op-46029	N.D. Ohio (Federal)
KY	County of Taylor (Fiscal Court)	1:19-op-46007	N.D. Ohio (Federal)
KY	County of Todd (Fiscal Court)	1:19-op-45949	N.D. Ohio (Federal)
KY	County of Union (Fiscal Court)	1:17-op-45015	N.D. Ohio (Federal)
KY	County of Warren	1:20-op-45075	N.D. Ohio (Federal)
KY	County of Wayne (Fiscal Court)	1:18-op-45389	N.D. Ohio (Federal)
KY	County of Webster (Fiscal Court)	1:19-op-46098	N.D. Ohio (Federal)
KY	County of Whitley (Fiscal Court)	1:17-op-45030	N.D. Ohio (Federal)
KY	County of Wolfe (Fiscal Court)	1:18-op-46099	N.D. Ohio (Federal)
KY	County of Woodford (Fiscal Court)	1:17-op-45174	N.D. Ohio (Federal)
KY	Estill County Emergency Medical Services	1:18-op-46237	N.D. Ohio (Federal)
KY	Hardin Memorial Hospital	1:20-op-45293	N.D. Ohio (Federal)
KY	Kentucky River District Health Department	1:19-op-45050	N.D. Ohio (Federal)
KY	Lexington-Fayette Urban County Government	1:17-op-45092	N.D. Ohio (Federal)
KY	Louisville/Jefferson County Metro Government	1:17-op-45013	N.D. Ohio (Federal)
KY	Taylor County Hospital District Health Facilities Corporation	1:20-op-45060	N.D. Ohio (Federal)
MA	City of Amesbury	1:18-op-45678	N.D. Ohio (Federal)
MA	City of Beverly	1:19-op-45219	N.D. Ohio (Federal)
MA	City of Brockton	1:18-op-46089	N.D. Ohio (Federal)
MA	City of Cambridge	19-2854-BLS2	MDL - In re Opioid Litigation (MA - Superior Court, County of Suffolk) (State MDL)
MA	City of Chelsea	1:18-op-45693	N.D. Ohio (Federal)
MA	City of Chicopee	19-1621-BLS2	MDL - In re Opioid Litigation (MA - Superior Court, County of Suffolk) (State MDL)
MA	City of Easthampton	1:18-op-45336	N.D. Ohio (Federal)
MA	City of Everett	1:18-op-45596	N.D. Ohio (Federal)
MA	City of Fall River	1:18-op-46285	N.D. Ohio (Federal)
MA	City of Fitchburg	1:19-op-45030	N.D. Ohio (Federal)
MA	City of Framingham	19-1487-BLS2	MDL - In re Opioid Litigation (MA - Superior Court, County of Suffolk) (State MDL)
MA	City of Gloucester	19-1351-BLS2	MDL - In re Opioid Litigation (MA - Superior Court, County of Suffolk) (State MDL)
MA	City of Greenfield a/k/a Town of Greenfield	1:18-op-45017	N.D. Ohio (Federal)
MA	City of Haverhill	19-1311-BLS2	MDL - In re Opioid Litigation (MA - Superior Court, County of Suffolk) (State MDL)

State	Subdivision/Special District	Case No.	Jurisdiction
MA	City of Holyoke	1:18-op-45694	N.D. Ohio (Federal)
MA	City of Leominster	1:18-op-45710	N.D. Ohio (Federal)
MA	City of Lowell	1:18-op-45514	N.D. Ohio (Federal)
MA	City of Lynn	1:18-op-45789	N.D. Ohio (Federal)
MA	City of Malden	1:18-op-45487	N.D. Ohio (Federal)
MA	City of Medford	1:19-op-45110	N.D. Ohio (Federal)
MA	City of Melrose	1:18-op-45951	N.D. Ohio (Federal)
MA	City of Methuen	1:18-op-45106	N.D. Ohio (Federal)
MA	City of New Bedford	1:19-op-45569	N.D. Ohio (Federal)
MA	City of Newburyport	1:18-op-45837	N.D. Ohio (Federal)
MA	City of North Adams	1:18-op-45702	N.D. Ohio (Federal)
MA	City of Northampton	1:18-op-45337	N.D. Ohio (Federal)
MA	City of Peabody	1:18-op-45860	N.D. Ohio (Federal)
MA	City of Pittsfield	1:18-op-45335	N.D. Ohio (Federal)
MA	City of Quincy	1:19-op-45008	N.D. Ohio (Federal)
MA	City of Revere	1:18-op-45155	N.D. Ohio (Federal)
MA	City of Salem	19-1355-BLS2	MDL - In re Opioid Litigation (MA - Superior Court, County of Suffolk) (State MDL)
MA	City of Somerville	1:19-op-45319	N.D. Ohio (Federal)
MA	City of Springfield	19-1733-BLS2	MDL - In re Opioid Litigation (MA - Superior Court, County of Suffolk) (State MDL)
MA	City of Woburn	1:18-op-45103	N.D. Ohio (Federal)
MA	City of Worcester	19-543-BLS2	MDL - In re Opioid Litigation (MA - Superior Court, County of Suffolk) (State MDL)
MA	Town of Acushnet	1:18-op-45676	N.D. Ohio (Federal)
MA	Town of Agawam	1:18-op-45792	N.D. Ohio (Federal)
MA	Town of Andover	1:19-op-45996	N.D. Ohio (Federal)
MA	Town of Aquinnah	1:18-op-46091	N.D. Ohio (Federal)
MA	Town of Athol	1:19-op-45058	N.D. Ohio (Federal)
MA	Town of Auburn	1:18-op-45688	N.D. Ohio (Federal)
MA	Town of Ayer	1:19-op-45570	N.D. Ohio (Federal)
MA	Town of Barnstable	1:18-op-45862	N.D. Ohio (Federal)
MA	Town of Belchertown	1:18-op-45905	N.D. Ohio (Federal)
MA	Town of Billerica	1:18-op-45560	N.D. Ohio (Federal)
MA	Town of Braintree	1:19-op-45673	N.D. Ohio (Federal)
MA	Town of Brewster	1:18-op-45556	N.D. Ohio (Federal)
MA	Town of Bridgewater	1:18-op-45754	N.D. Ohio (Federal)
MA	Town of Brookline	1:19-op-45062	N.D. Ohio (Federal)
MA	Town of Canton	19-1615-BLS2	MDL - In re Opioid Litigation (MA - Superior Court, County of Suffolk) (State MDL)
MA	Town of Carver	1:18-op-45691	N.D. Ohio (Federal)
MA	Town of Charlton	1:18-op-45689	N.D. Ohio (Federal)
MA	Town of Chelmsford	1:18-op-45952	N.D. Ohio (Federal)
MA	Town of Clarksburg	1:18-op-45882	N.D. Ohio (Federal)
MA	Town of Clinton	1:19-op-46072	N.D. Ohio (Federal)
MA	Town of Danvers	1:18-op-45760	N.D. Ohio (Federal)
MA	Town of Dedham	1:19-op-45039	N.D. Ohio (Federal)
MA	Town of Dennis	1:19-op-45124	N.D. Ohio (Federal)

State	Subdivision/Special District	Case No.	Jurisdiction
MA	Town of Douglas	1:18-op-45706	N.D. Ohio (Federal)
MA	Town of Dudley	1:18-op-45707	N.D. Ohio (Federal)
MA	Town of East Bridgewater	1:18-op-45721	N.D. Ohio (Federal)
MA	Town of Eastham	1:18-op-45864	N.D. Ohio (Federal)
MA	Town of Easton	1:19-op-45920	N.D. Ohio (Federal)
MA	Town of Fairhaven	1:19-op-45060	N.D. Ohio (Federal)
MA	Town of Falmouth	1:18-op-46095	N.D. Ohio (Federal)
MA	Town of Freetown	1:18-op-45705	N.D. Ohio (Federal)
MA	Town of Georgetown	1:18-op-45879	N.D. Ohio (Federal)
MA	Town of Grafton	1:18-op-45753	N.D. Ohio (Federal)
MA	Town of Hanson	1:18-op-45704	N.D. Ohio (Federal)
MA	Town of Holliston	1:18-op-45874	N.D. Ohio (Federal)
MA	Town of Hopedale	1:18-op-45708	N.D. Ohio (Federal)
MA	Town of Hull	1:19-op-46172	N.D. Ohio (Federal)
MA	Town of Kingston	1:18-op-46090	N.D. Ohio (Federal)
MA	Town of Lakeville	1:18-op-45743	N.D. Ohio (Federal)
MA	Town of Leicester	1:18-op-45709	N.D. Ohio (Federal)
MA	Town of Leverett	1:18-op-45836	N.D. Ohio (Federal)
MA	Town of Longmeadow	1:18-op-46097	N.D. Ohio (Federal)
MA	Town of Ludlow	1:18-op-45906	N.D. Ohio (Federal)
MA	Town of Lunenberg	1:18-op-46156	N.D. Ohio (Federal)
MA	Town of Lynnfield	19-1330-BLS2	MDL - In re Opioid Litigation (MA - Superior Court, County of Suffolk) (State MDL)
MA	Town of Marblehead	1:18-op-45791	N.D. Ohio (Federal)
MA	Town of Marshfield	1:18-op-45752	N.D. Ohio (Federal)
MA	Town of Mashpee	1:18-op-45755	N.D. Ohio (Federal)
MA	Town of Mattapoisett	1:18-op-45890	N.D. Ohio (Federal)
MA	Town of Middleborough	1:18-op-46200	N.D. Ohio (Federal)
MA	Town of Milford	1:18-op-45783	N.D. Ohio (Federal)
MA	Town of Millbury	1:18-op-46123	N.D. Ohio (Federal)
MA	Town of Millis	1:20-op-45275	N.D. Ohio (Federal)
MA	Town of Nantucket	1:18-op-45703	N.D. Ohio (Federal)
MA	Town of Natick	19-2002-BLS2	MDL - In re Opioid Litigation (MA - Superior Court, County of Suffolk) (State MDL)
MA	Town of North Andover	1:18-op-46159	N.D. Ohio (Federal)
MA	Town of North Attleborough	1:18-op-45744	N.D. Ohio (Federal)
MA	Town of North Reading	1:18-op-45856	N.D. Ohio (Federal)
MA	Town of Northbridge	1:18-op-45711	N.D. Ohio (Federal)
MA	Town of Norton	1:18-op-45787	N.D. Ohio (Federal)
MA	Town of Norwell	1:18-op-45815	N.D. Ohio (Federal)
MA	Town of Norwood	1:19-op-45061	N.D. Ohio (Federal)
MA	Town of Orange	1:19-op-45070	N.D. Ohio (Federal)
MA	Town of Oxford	1:19-op-45568	N.D. Ohio (Federal)
MA	Town of Palmer	1:18-op-45812	N.D. Ohio (Federal)
MA	Town of Pembroke	1:18-op-45823	N.D. Ohio (Federal)
MA	Town of Plainville	1:18-op-45808	N.D. Ohio (Federal)
MA	Town of Plymouth	1:18-op-45675	N.D. Ohio (Federal)

State	Subdivision/Special District	Case No.	Jurisdiction
MA	Town of Provincetown	1:19-op-45125	N.D. Ohio (Federal)
MA	Town of Randolph	19-2573-BLS2	MDL - In re Opioid Litigation (MA - Superior Court, County of Suffolk) (State MDL)
MA	Town of Rehoboth	1:19-op-45059	N.D. Ohio (Federal)
MA	Town of Rockland	1:18-op-45824	N.D. Ohio (Federal)
MA	Town of Salisbury	1:18-op-45595	N.D. Ohio (Federal)
MA	Town of Sandwich	1:18-op-45891	N.D. Ohio (Federal)
MA	Town of Scituate	1:19-op-45063	N.D. Ohio (Federal)
MA	Town of Seekonk	1:18-op-45881	N.D. Ohio (Federal)
MA	Town of Sheffield	1:18-op-46001	N.D. Ohio (Federal)
MA	Town of Shirley	1:18-op-45880	N.D. Ohio (Federal)
MA	Town of Somerset	1:18-op-45769	N.D. Ohio (Federal)
MA	Town of South Hadley	1:18-op-46000	N.D. Ohio (Federal)
MA	Town of Southbridge	1:18-op-45686	N.D. Ohio (Federal)
MA	Town of Spencer	1:18-op-45809	N.D. Ohio (Federal)
MA	Town of Stoneham	1:18-op-46164	N.D. Ohio (Federal)
MA	Town of Stoughton	1:19-op-45023	N.D. Ohio (Federal)
MA	Town of Sturbridge	1:18-op-45990	N.D. Ohio (Federal)
MA	Town of Sudbury	1:18-op-45877	N.D. Ohio (Federal)
MA	Town of Sutton	1:18-op-45810	N.D. Ohio (Federal)
MA	Town of Swampscott	1:18-op-45911	N.D. Ohio (Federal)
MA	Town of Templeton	1:18-op-45784	N.D. Ohio (Federal)
MA	Town of Tewksbury	1:19-op-45077	N.D. Ohio (Federal)
MA	Town of Truro	1:18-op-45816	N.D. Ohio (Federal)
MA	Town of Tyngsborough	1:18-op-45770	N.D. Ohio (Federal)
MA	Town of Upton	1:18-op-46160	N.D. Ohio (Federal)
MA	Town of Wakefield	19-1499-BLS2	MDL - In re Opioid Litigation (MA - Superior Court, County of Suffolk) (State MDL)
MA	Town of Walpole	1:18-op-46093	N.D. Ohio (Federal)
MA	Town of Ware	1:18-op-45907	N.D. Ohio (Federal)
MA	Town of Warren	1:18-op-45811	N.D. Ohio (Federal)
MA	Town of Watertown	1:18-op-45674	N.D. Ohio (Federal)
MA	Town of Wellfleet	1:19-op-45556	N.D. Ohio (Federal)
MA	Town of West Boylston	1:18-op-45858	N.D. Ohio (Federal)
MA	Town of West Bridgewater	1:18-op-46102	N.D. Ohio (Federal)
MA	Town of West Springfield	1:18-op-45813	N.D. Ohio (Federal)
MA	Town of West Tisbury	1:18-op-45790	N.D. Ohio (Federal)
MA	Town of Westborough	1:18-op-45859	N.D. Ohio (Federal)
MA	Town of Westford	1:18-op-46007	N.D. Ohio (Federal)
MA	Town of Weymouth	1:19-op-45672	N.D. Ohio (Federal)
MA	Town of Williamsburg	1:18-op-45883	N.D. Ohio (Federal)
MA	Town of Wilmington	1:18-op-46158	N.D. Ohio (Federal)
MA	Town of Winchendon	1:18-op-45687	N.D. Ohio (Federal)
MA	Town of Winthrop	1:18-op-45814	N.D. Ohio (Federal)
MD	Baltimore City Board of School Commissioners	1:20-op-45281	N.D. Ohio (Federal)
MD	City of Aberdeen	1:19-op-45772	N.D. Ohio (Federal)
MD	City of Bel Air	1:19-op-45669	N.D. Ohio (Federal)

State	Subdivision/Special District	Case No.	Jurisdiction
MD	City of Berlin	1:19-op-45676	N.D. Ohio (Federal)
MD	City of Bowie	1:18-op-45853	N.D. Ohio (Federal)
MD	City of Cambridge	1:19-op-45611	N.D. Ohio (Federal)
MD	City of Charlestown	1:19-op-45677	N.D. Ohio (Federal)
MD	City of Cumberland	1:18-op-45624	N.D. Ohio (Federal)
MD	City of Frederick	1:18-op-45853	N.D. Ohio (Federal)
MD	City of Frostburg	1:18-op-45617	N.D. Ohio (Federal)
MD	City of Grantsville	1:19-op-45668	N.D. Ohio (Federal)
MD	City of Hagerstown	1:18-op-45622	N.D. Ohio (Federal)
MD	City of Havre De Grace	1:19-op-45678	N.D. Ohio (Federal)
MD	City of Laurel	1:19-op-45714	N.D. Ohio (Federal)
MD	City of Mountain Lake Park	1:19-op-45666	N.D. Ohio (Federal)
MD	City of North East	1:19-op-45670	N.D. Ohio (Federal)
MD	City of Oakland	1:19-op-45916	N.D. Ohio (Federal)
MD	City of Perryville	1:19-op-45679	N.D. Ohio (Federal)
MD	City of Seat Pleasant	1:19-op-45288	N.D. Ohio (Federal)
MD	City of Vienna	1:19-op-45680	N.D. Ohio (Federal)
MD	County of Allegany	1:18-op-45652	N.D. Ohio (Federal)
MD	County of Anne Arundel	C-02-CV-18-000021	MD - Circuit Court for Anne Arundel (State)
MD	County of Baltimore	1:18-op-45554	N.D. Ohio (Federal)
MD	County of Calvert (County Commissioners)	1:19-op-45609	N.D. Ohio (Federal)
MD	County of Caroline	1:18-op-45853	N.D. Ohio (Federal)
MD	County of Carroll (County Commissioners)	1:20-op-45052	N.D. Ohio (Federal)
MD	County of Cecil	1:18-op-45100	N.D. Ohio (Federal)
MD	County of Charles (County Commissioners)	1:19-op-45094	N.D. Ohio (Federal)
MD	County of Dorchester	1:19-op-45610	N.D. Ohio (Federal)
MD	County of Frederick	1:18-op-45853	N.D. Ohio (Federal)
MD	County of Garrett	1:18-op-45853	N.D. Ohio (Federal)
MD	County of Harford	1:18-op-45853	N.D. Ohio (Federal)
MD	County of Howard	1:19-op-46169	N.D. Ohio (Federal)
MD	County of Montgomery	1:18-op-45212	N.D. Ohio (Federal)
MD	County of Prince George's	1:18-op-45501	N.D. Ohio (Federal)
MD	County of Somerset	1:19-op-45911	N.D. Ohio (Federal)
MD	County of St. Mary's (County Commissioners)	1:18-op-46334	N.D. Ohio (Federal)
MD	County of Talbot	1:18-op-45853	N.D. Ohio (Federal)
MD	County of Washington (Board of County Commissioners)	1:18-op-46060	N.D. Ohio (Federal)
MD	County of Wicomico	1:19-op-45681	N.D. Ohio (Federal)
MD	Mayor and City Council of Baltimore	24C18000515	MD - Circuit Court for Baltimore City (State)
MD	Mayor and Common Council of Westminster	1:18-op-45853	N.D. Ohio (Federal)
MD	Mayor and Council of Rockville	1:18-op-45853	N.D. Ohio (Federal)
MD	Town of Cottage City	1:20-op-45235	N.D. Ohio (Federal)
MD	Town of Forest Heights	1:20-op-45235	N.D. Ohio (Federal)
MD	Town of North Brentwood	1:20-op-45235	N.D. Ohio (Federal)
MD	Town of Upper Marlboro	1:20-op-45235	N.D. Ohio (Federal)
ME	Board of Education of Bangor School Department	1:20-op-45281	N.D. Ohio (Federal)
ME	Board of Education of Cape Elizabeth School	1:20-op-45281	N.D. Ohio (Federal)

State	Subdivision/Special District	Case No.	Jurisdiction
	Department		
ME	Board of Education of Ellsworth School Department	1:20-op-45281	N.D. Ohio (Federal)
ME	Board of Education of Maine Regional School Unit 10	1:20-op-45281	N.D. Ohio (Federal)
ME	Board of Education of Maine Regional School Unit 13	1:20-op-45281	N.D. Ohio (Federal)
ME	Board of Education of Maine Regional School Unit 25	1:20-op-45281	N.D. Ohio (Federal)
ME	Board of Education of Maine Regional School Unit 26	1:20-op-45281	N.D. Ohio (Federal)
ME	Board of Education of Maine Regional School Unit 29	1:20-op-45281	N.D. Ohio (Federal)
ME	Board of Education of Maine Regional School Unit 34	1:20-op-45281	N.D. Ohio (Federal)
ME	Board of Education of Maine Regional School Unit 40	1:20-op-45281	N.D. Ohio (Federal)
ME	Board of Education of Maine Regional School Unit 50	1:20-op-45281	N.D. Ohio (Federal)
ME	Board of Education of Maine Regional School Unit 57	1:20-op-45281	N.D. Ohio (Federal)
ME	Board of Education of Maine Regional School Unit 60	1:20-op-45281	N.D. Ohio (Federal)
ME	Board of Education of Maine Regional School Unit 71	1:20-op-45281	N.D. Ohio (Federal)
ME	Board of Education of Maine Regional School Unit 9	1:20-op-45281	N.D. Ohio (Federal)
ME	Board of Education of Maine School Administrative District 11	1:20-op-45281	N.D. Ohio (Federal)
ME	Board of Education of Maine School Administrative District 15	1:20-op-45281	N.D. Ohio (Federal)
ME	Board of Education of Maine School Administrative District 28 Five Town Central School District	1:20-op-45281	N.D. Ohio (Federal)
ME	Board of Education of Maine School Administrative District 35	1:20-op-45281	N.D. Ohio (Federal)
ME	Board of Education of Maine School Administrative District 44	1:20-op-45281	N.D. Ohio (Federal)
ME	Board of Education of Maine School Administrative District 53	1:20-op-45281	N.D. Ohio (Federal)
ME	Board of Education of Maine School Administrative District 55	1:20-op-45281	N.D. Ohio (Federal)
ME	Board of Education of Maine School Administrative District 6	1:20-op-45281	N.D. Ohio (Federal)
ME	Board of Education of Maine School Administrative District 61	1:20-op-45281	N.D. Ohio (Federal)
ME	Board of Education of Maine School Administrative District 72	1:20-op-45281	N.D. Ohio (Federal)
ME	Board of Education of Portland School Department	1:20-op-45281	N.D. Ohio (Federal)
ME	Board of Education of Scarborough School Department	1:20-op-45281	N.D. Ohio (Federal)
ME	Board of Education of South Portland School	1:20-op-45281	N.D. Ohio (Federal)

State	Subdivision/Special District	Case No.	Jurisdiction
	Department		
ME	Board of Education of St. George Municipal School District	1:20-op-45281	N.D. Ohio (Federal)
ME	Board of Education of Waterville School Department	1:20-op-45281	N.D. Ohio (Federal)
ME	City of Auburn	1:19-op-45188	N.D. Ohio (Federal)
ME	City of Augusta	1:19-op-45182	N.D. Ohio (Federal)
ME	City of Bangor	1:18-op-46314	N.D. Ohio (Federal)
ME	City of Biddeford	1:19-op-45258	N.D. Ohio (Federal)
ME	City of Calais	1:20-op-45051	N.D. Ohio (Federal)
ME	City of Lewiston	1:18-op-46315	N.D. Ohio (Federal)
ME	City of Portland	1:18-op-46313	N.D. Ohio (Federal)
ME	City of Rockland	1:19-op-45823	N.D. Ohio (Federal)
ME	City of Saco	1:19-op-45310	N.D. Ohio (Federal)
ME	City of Sanford	1:19-op-45311	N.D. Ohio (Federal)
ME	City of Waterville	1:19-op-45193	N.D. Ohio (Federal)
ME	County of Androscoggin	1:19-op-45205	N.D. Ohio (Federal)
ME	County of Aroostook	1:19-op-45183	N.D. Ohio (Federal)
ME	County of Cumberland	1:19-op-45259	N.D. Ohio (Federal)
ME	County of Kennebec	1:19-op-45257	N.D. Ohio (Federal)
ME	County of Knox	1:19-op-45822	N.D. Ohio (Federal)
ME	County of Lincoln	1:19-op-45190	N.D. Ohio (Federal)
ME	County of Penobscot	1:19-op-45184	N.D. Ohio (Federal)
ME	County of Sagadahoc	1:19-op-45189	N.D. Ohio (Federal)
ME	County of Somerset	1:19-op-45186	N.D. Ohio (Federal)
ME	County of Waldo	1:19-op-45309	N.D. Ohio (Federal)
ME	County of Washington	1:19-op-45185	N.D. Ohio (Federal)
ME	County of York	1:19-op-45191	N.D. Ohio (Federal)
MI	Charter Township of Canton	1:18-op-46134	N.D. Ohio (Federal)
MI	Charter Township of Clinton	1:18-op-46135	N.D. Ohio (Federal)
MI	Charter Township of Harrison	1:19-op-45863	N.D. Ohio (Federal)
MI	Charter Township of Huron	1:18-op-46134	N.D. Ohio (Federal)
MI	Charter Township of Northville	1:18-op-46134	N.D. Ohio (Federal)
MI	Charter Township of Pittsfield	1:19-op-45566	N.D. Ohio (Federal)
MI	Charter Township of Van Buren	1:18-op-46134	N.D. Ohio (Federal)
MI	City of Detroit	1:18-op-45084	N.D. Ohio (Federal)
MI	City of East Lansing	1:18-op-45902	N.D. Ohio (Federal)
MI	City of Escanaba	1:18-op-45068	N.D. Ohio (Federal)
MI	City of Flint	1:19-op-45122	N.D. Ohio (Federal)
MI	City of Grand Rapids	1:18-op-45406	N.D. Ohio (Federal)
MI	City of Iron Mountain	1:18-op-45344	N.D. Ohio (Federal)
MI	City of Jackson	1:18-op-45904	N.D. Ohio (Federal)
MI	City of Lansing	1:18-op-45054	N.D. Ohio (Federal)
MI	City of Livonia	1:18-op-46134	N.D. Ohio (Federal)
MI	City of Pontiac	1:19-op-46183	N.D. Ohio (Federal)
MI	City of Romulus	1:18-op-46134	N.D. Ohio (Federal)
MI	City of Sault Sainte Marie	1:18-op-45928	N.D. Ohio (Federal)
MI	City of Sterling Heights	1:19-op-45864	N.D. Ohio (Federal)

State	Subdivision/Special District	Case No.	Jurisdiction
MI	City of Traverse City	1:18-op-45901	N.D. Ohio (Federal)
MI	City of Warren	1:19-op-45865	N.D. Ohio (Federal)
MI	City of Wayne	1:18-op-46134	N.D. Ohio (Federal)
MI	City of Westland	1:18-op-45903	N.D. Ohio (Federal)
MI	County of Alcona	1:18-op-45340	N.D. Ohio (Federal)
MI	County of Alger	1:18-op-45360	N.D. Ohio (Federal)
MI	County of Alpena	1:18-op-45871	N.D. Ohio (Federal)
MI	County of Antrim	1:18-op-45354	N.D. Ohio (Federal)
MI	County of Arenac	1:18-op-45341	N.D. Ohio (Federal)
MI	County of Baraga	1:18-op-45361	N.D. Ohio (Federal)
MI	County of Bay	1:19-op-45228	N.D. Ohio (Federal)
MI	County of Benzie	1:18-op-45356	N.D. Ohio (Federal)
MI	County of Berrien	1:18-op-45887	N.D. Ohio (Federal)
MI	County of Branch	1:18-op-46096	N.D. Ohio (Federal)
MI	County of Calhoun	1:19-op-45560	N.D. Ohio (Federal)
MI	County of Cass	1:18-op-45868	N.D. Ohio (Federal)
MI	County of Charlevoix	1:18-op-45897	N.D. Ohio (Federal)
MI	County of Cheboygan	1:19-op-45636	N.D. Ohio (Federal)
MI	County of Chippewa	1:18-op-45066	N.D. Ohio (Federal)
MI	County of Clinton	1:18-op-45889	N.D. Ohio (Federal)
MI	County of Crawford	1:18-op-45105	N.D. Ohio (Federal)
MI	County of Delta	1:18-op-45067	N.D. Ohio (Federal)
MI	County of Dickinson	1:18-op-45342	N.D. Ohio (Federal)
MI	County of Eaton	1:18-op-45971	N.D. Ohio (Federal)
MI	County of Genesee	1:18-op-45083	N.D. Ohio (Federal)
MI	County of Grand Traverse	1:18-op-45056	N.D. Ohio (Federal)
MI	County of Gratiot	1:18-op-45339	N.D. Ohio (Federal)
MI	County of Hillsdale	1:18-op-45355	N.D. Ohio (Federal)
MI	County of Houghton	1:18-op-45866	N.D. Ohio (Federal)
MI	County of Ingham	1:18-op-46178	N.D. Ohio (Federal)
MI	County of Ionia	1:19-op-45261	N.D. Ohio (Federal)
MI	County of Iosco	1:18-op-45343	N.D. Ohio (Federal)
MI	County of Iron	1:18-op-45888	N.D. Ohio (Federal)
MI	County of Isabella	1:18-op-45349	N.D. Ohio (Federal)
MI	County of Kalamazoo	1:19-op-45561	N.D. Ohio (Federal)
MI	County of Kent	1:19-op-45000	N.D. Ohio (Federal)
MI	County of Lake	1:18-op-45366	N.D. Ohio (Federal)
MI	County of Leelanau	1:18-op-45111	N.D. Ohio (Federal)
MI	County of Lenawee	1:18-op-45351	N.D. Ohio (Federal)
MI	County of Livingston	1:19-op-45262	N.D. Ohio (Federal)
MI	County of Luce	1:18-op-45362	N.D. Ohio (Federal)
MI	County of Macomb	1:18-op-45085	N.D. Ohio (Federal)
MI	County of Manistee	1:18-op-45113	N.D. Ohio (Federal)
MI	County of Marquette	1:18-op-45104	N.D. Ohio (Federal)
MI	County of Mason	1:18-op-45112	N.D. Ohio (Federal)
MI	County of Monroe	1:18-op-45158	N.D. Ohio (Federal)
MI	County of Montcalm	1:18-op-45865	N.D. Ohio (Federal)

State	Subdivision/Special District	Case No.	Jurisdiction
MI	County of Montmorency	1:18-op-45347	N.D. Ohio (Federal)
MI	County of Muskegon	1:18-op-46199	N.D. Ohio (Federal)
MI	County of Newaygo	1:18-op-46187	N.D. Ohio (Federal)
MI	County of Oakland	1:17-op-45102	N.D. Ohio (Federal)
MI	County of Oceana	1:18-op-45359	N.D. Ohio (Federal)
MI	County of Ogemaw	1:18-op-45348	N.D. Ohio (Federal)
MI	County of Ontonagon	1:18-op-45893	N.D. Ohio (Federal)
MI	County of Osceola	1:18-op-45357	N.D. Ohio (Federal)
MI	County of Otsego	1:18-op-45345	N.D. Ohio (Federal)
MI	County of Presque Isle	1:18-op-45894	N.D. Ohio (Federal)
MI	County of Roscommon	1:18-op-45102	N.D. Ohio (Federal)
MI	County of Saginaw	1:18-op-45082	N.D. Ohio (Federal)
MI	County of Sanilac	1:18-op-45352	N.D. Ohio (Federal)
MI	County of Shiawassee	1:18-op-45350	N.D. Ohio (Federal)
MI	County of St. Clair	1:18-op-45896	N.D. Ohio (Federal)
MI	County of Tuscola	1:18-op-45870	N.D. Ohio (Federal)
MI	County of Washtenaw	1:18-op-45886	N.D. Ohio (Federal)
MI	County of Wayne	1:17-op-45102	N.D. Ohio (Federal)
MI	County of Wexford	1:18-op-45364	N.D. Ohio (Federal)
MI	Detroit Wayne Mental Health Authority	1:18-op-46332	N.D. Ohio (Federal)
MN	Board of Education of Minnetonka School District No. 276	1:20-op-45281	N.D. Ohio (Federal)
MN	City of Coon Rapids	1:19-op-45835	N.D. Ohio (Federal)
MN	City of Duluth	1:19-op-45304	N.D. Ohio (Federal)
MN	City of Minneapolis	1:18-op-45850	N.D. Ohio (Federal)
MN	City of North St. Paul	1:19-op-46066	N.D. Ohio (Federal)
MN	City of Proctor	1:19-op-45748	N.D. Ohio (Federal)
MN	City of Rochester	1:19-op-45501	N.D. Ohio (Federal)
MN	City of Saint Paul	1:19-op-45424	N.D. Ohio (Federal)
MN	County of Anoka	1:18-op-45101	N.D. Ohio (Federal)
MN	County of Beltrami	1:19-op-45776	N.D. Ohio (Federal)
MN	County of Big Stone	1:20-op-45102	N.D. Ohio (Federal)
MN	County of Carlton	1:19-op-45608	N.D. Ohio (Federal)
MN	County of Carver	1:19-op-45798	N.D. Ohio (Federal)
MN	County of Dakota	1:18-op-46112	N.D. Ohio (Federal)
MN	County of Douglas	1:18-op-45428	N.D. Ohio (Federal)
MN	County of Freeborn	1:19-op-45737	N.D. Ohio (Federal)
MN	County of Hennepin	1:18-op-45232	N.D. Ohio (Federal)
MN	County of Itasca	1:18-op-45958	N.D. Ohio (Federal)
MN	County of McLeod	1:19-op-45332	N.D. Ohio (Federal)
MN	County of Meeker	1:19-op-45343	N.D. Ohio (Federal)
MN	County of Morrison	1:18-op-45429	N.D. Ohio (Federal)
MN	County of Mower	1:17-op-45072	N.D. Ohio (Federal)
MN	County of Olmsted	1:19-op-45547	N.D. Ohio (Federal)
MN	County of Pine	1:19-op-45738	N.D. Ohio (Federal)
MN	County of Ramsey	1:17-op-45073	N.D. Ohio (Federal)
MN	County of Roseau	1:19-op-45344	N.D. Ohio (Federal)
MN	County of Sibley	1:19-op-45333	N.D. Ohio (Federal)

State	Subdivision/Special District	Case No.	Jurisdiction
MN	County of St. Louis	1:18-op-45430	N.D. Ohio (Federal)
MN	County of Steele	1:19-op-45800	N.D. Ohio (Federal)
MN	County of Waseca	1:19-op-45800	N.D. Ohio (Federal)
MN	County of Washington	1:17-op-45074	N.D. Ohio (Federal)
MN	County of Winona	1:19-op-45271	N.D. Ohio (Federal)
MN	County of Wright	1:19-op-45661	N.D. Ohio (Federal)
MN	County of Yellow Medicine	1:19-op-45358	N.D. Ohio (Federal)
MN	Minnesota Prairie Health Alliance	1:19-op-45800	N.D. Ohio (Federal)
MO	Citizens Memorial Hospital District d/b/a Citizens Memorial Hospital	6:22-cv-03192	W.D. Missouri (Federal)
MO	City of Independence	1:19-op-45371	N.D. Ohio (Federal)
MO	City of Joplin	1:19-op-45371	N.D. Ohio (Federal)
MO	City of Kansas City	1:18-op-46029	N.D. Ohio (Federal)
MO	City of Sedalia	1:20-op-45152	N.D. Ohio (Federal)
MO	City of Springfield	1:18-op-45899	N.D. Ohio (Federal)
MO	City of St. Joseph	1:18-op-45798	N.D. Ohio (Federal)
MO	City of St. Louis	1:18-op-46267	N.D. Ohio (Federal)
MO	County of Adair	1:20-op-45297	N.D. Ohio (Federal)
MO	County of Andrew	1:20-op-45298	N.D. Ohio (Federal)
MO	County of Atchison	1:18-op-45797	N.D. Ohio (Federal)
MO	County of Audrain	1:18-op-46265	N.D. Ohio (Federal)
MO	County of Barry	1:21-op-45016	N.D. Ohio (Federal)
MO	County of Barton	1:20-op-45171	N.D. Ohio (Federal)
MO	County of Boone	1:19-op-45375	N.D. Ohio (Federal)
MO	County of Buchanan	1:18-op-45028	N.D. Ohio (Federal)
MO	County of Butler	1:19-op-45371	N.D. Ohio (Federal)
MO	County of Callaway	1:19-op-45378	N.D. Ohio (Federal)
MO	County of Camden	1:20-op-45068	N.D. Ohio (Federal)
MO	County of Cape Girardeau	1:19-op-45371	N.D. Ohio (Federal)
MO	County of Cass	1:18-op-45841	N.D. Ohio (Federal)
MO	County of Chariton	1:19-op-45790	N.D. Ohio (Federal)
MO	County of Christian	1:19-op-45371	N.D. Ohio (Federal)
MO	County of Clinton	1:20-op-45130	N.D. Ohio (Federal)
MO	County of Cole	1:18-op-46189	N.D. Ohio (Federal)
MO	County of Crawford	1:19-op-45371	N.D. Ohio (Federal)
MO	County of Dade	1:20-op-45224	N.D. Ohio (Federal)
MO	County of DeKalb	1:20-op-45299	N.D. Ohio (Federal)
MO	County of Dent	1:19-op-45371	N.D. Ohio (Federal)
MO	County of Douglas	1:19-op-45386	N.D. Ohio (Federal)
MO	County of Dunklin	1:19-op-45371	N.D. Ohio (Federal)
MO	County of Franklin	20AB-CC00006	MO - Circuit Court of Franklin County (State)
MO	County of Gasconade	1:18-op-46190	N.D. Ohio (Federal)
MO	County of Greene	1:19-op-45371	N.D. Ohio (Federal)
MO	County of Grundy	1:20-op-45300	N.D. Ohio (Federal)
MO	County of Henry	1:20-op-45135	N.D. Ohio (Federal)
MO	County of Hickory	1:20-op-45295	N.D. Ohio (Federal)
MO	County of Iron	1:19-op-45371	N.D. Ohio (Federal)
MO	County of Jackson	1:18-op-45965	N.D. Ohio (Federal)

State	Subdivision/Special District	Case No.	Jurisdiction
MO	County of Jasper	1:19-op-45371	N.D. Ohio (Federal)
MO	County of Jefferson	20JE-CC00029	MO - Circuit Court of Jefferson County (State)
MO	County of Knox	1:19-op-45406	N.D. Ohio (Federal)
MO	County of Lafayette	1:18-op-45840	N.D. Ohio (Federal)
MO	County of Lawrence	1:20-op-45134	N.D. Ohio (Federal)
MO	County of Lewis	1:18-op-46263	N.D. Ohio (Federal)
MO	County of Lincoln	1:20-op-45069	N.D. Ohio (Federal)
MO	County of Livingston	1:18-op-46168	N.D. Ohio (Federal)
MO	County of Madison	1:19-op-45371	N.D. Ohio (Federal)
MO	County of Maries	1:18-op-46194	N.D. Ohio (Federal)
MO	County of McDonald	1:20-op-45225	N.D. Ohio (Federal)
MO	County of Miller	1:19-op-45274	N.D. Ohio (Federal)
MO	County of Moniteau	1:18-op-46352	N.D. Ohio (Federal)
MO	County of Montgomery	1:18-op-46197	N.D. Ohio (Federal)
MO	County of New Madrid	1:20-op-45296	N.D. Ohio (Federal)
MO	County of Nodaway	1:18-op-45795	N.D. Ohio (Federal)
MO	County of Osage	1:18-op-46191	N.D. Ohio (Federal)
MO	County of Ozark	1:18-op-46198	N.D. Ohio (Federal)
MO	County of Pemiscot	1:19-op-45733	N.D. Ohio (Federal)
MO	County of Perry	1:19-op-45371	N.D. Ohio (Federal)
MO	County of Pettis	1:19-op-45416 / 1:20-op-45152	N.D. Ohio (Federal)
MO	County of Phelps	1:18-op-46195	N.D. Ohio (Federal)
MO	County of Pike	1:20-op-45131	N.D. Ohio (Federal)
MO	County of Polk	1:20-op-45082	N.D. Ohio (Federal)
MO	County of Pulaski	1:18-op-46192	N.D. Ohio (Federal)
MO	County of Ralls	1:20-op-45292	N.D. Ohio (Federal)
MO	County of Randolph	1:19-op-45409	N.D. Ohio (Federal)
MO	County of Ray	1:20-op-45132	N.D. Ohio (Federal)
MO	County of Reynolds	1:18-op-46193	N.D. Ohio (Federal)
MO	County of Ripley	1:18-op-46262	N.D. Ohio (Federal)
MO	County of Schuyler	1:19-op-45408	N.D. Ohio (Federal)
MO	County of Scott	1:19-op-46174	N.D. Ohio (Federal)
MO	County of Shannon	1:19-op-45401	N.D. Ohio (Federal)
MO	County of Shelby	1:18-op-46264	N.D. Ohio (Federal)
MO	County of St. Charles	1:18-op-46059	N.D. Ohio (Federal)
MO	County of St. Clair	1:21-op-45044	N.D. Ohio (Federal)
MO	County of St. Francois	1:19-op-45847	N.D. Ohio (Federal)
MO	County of St. Louis	1:17-op-45083	N.D. Ohio (Federal)
MO	County of Ste. Genevieve	1:19-op-45371	N.D. Ohio (Federal)
MO	County of Stone	1:19-op-45371	N.D. Ohio (Federal)
MO	County of Taney	1:19-op-45371	N.D. Ohio (Federal)
MO	County of Texas	1:19-op-45371	N.D. Ohio (Federal)
MO	County of Vernon	1:20-op-45133	N.D. Ohio (Federal)
MO	County of Warren	1:18-op-46196	N.D. Ohio (Federal)
MO	County of Washington	1:19-op-45371	N.D. Ohio (Federal)
MO	County of Webster	1:18-op-46350	N.D. Ohio (Federal)

State	Subdivision/Special District	Case No.	Jurisdiction
MO	County of Worth	1:18-op-45777	N.D. Ohio (Federal)
MO	County of Wright	1:19-op-45383	N.D. Ohio (Federal)
MO	Kinloch Fire Protection District of St. Louis County	1:19-op-45665	N.D. Ohio (Federal)
MO	Northeast Ambulance and Fire Protection District of St. Louis County	1:19-op-45664	N.D. Ohio (Federal)
MS	City of Amory	1:19-op-45549	N.D. Ohio (Federal)
MS	City of Brookhaven	1:19-op-46143	N.D. Ohio (Federal)
MS	City of Charleston	1:18-op-45398	N.D. Ohio (Federal)
MS	City of Clarksdale	1:19-op-45620	N.D. Ohio (Federal)
MS	City of Cleveland	1:19-op-45879	N.D. Ohio (Federal)
MS	City of Columbia	1:19-op-45048	N.D. Ohio (Federal)
MS	City of Columbus	1:18-op-46286	N.D. Ohio (Federal)
MS	City of Diamondhead	1:19-op-45749	N.D. Ohio (Federal)
MS	City of Gautier	1:19-op-45871	N.D. Ohio (Federal)
MS	City of Greenwood	1:18-op-45950	N.D. Ohio (Federal)
MS	City of Grenada	1:19-op-45622	N.D. Ohio (Federal)
MS	City of Gulfport	1:19-op-45291	N.D. Ohio (Federal)
MS	City of Hattiesburg	1:18-op-45512	N.D. Ohio (Federal)
MS	City of Holly Springs	CV2020-141	MS - Circuit Court of Marshall County (State)
MS	City of Indianola	1:19-op-45624	N.D. Ohio (Federal)
MS	City of Iuka	1:18-op-46172	N.D. Ohio (Federal)
MS	City of Jackson	1:19-op-45806	N.D. Ohio (Federal)
MS	City of Jonestown	1:19-op-45623	N.D. Ohio (Federal)
MS	City of Kosciusko	1:19-op-45872	N.D. Ohio (Federal)
MS	City of Laurel	1:18-op-46161	N.D. Ohio (Federal)
MS	City of Long Beach	1:19-op-45517	N.D. Ohio (Federal)
MS	City of Lumberton	1:18-op-46236	N.D. Ohio (Federal)
MS	City of Meridian	1:18-op-45969	N.D. Ohio (Federal)
MS	City of Morton	1:19-op-45882	N.D. Ohio (Federal)
MS	City of Moss Point	1:19-op-45880	N.D. Ohio (Federal)
MS	City of Mound Bayou	1:19-op-45422	N.D. Ohio (Federal)
MS	City of Nettleton	1:19-op-45151	N.D. Ohio (Federal)
MS	City of New Albany	1:18-op-45949	N.D. Ohio (Federal)
MS	City of Ocean Springs	1:19-op-45878	N.D. Ohio (Federal)
MS	City of Pascagoula	1:19-op-45934	N.D. Ohio (Federal)
MS	City of Philadelphia	1:18-op-45279	N.D. Ohio (Federal)
MS	City of Quitman	1:19-op-45873	N.D. Ohio (Federal)
MS	City of Shannon	1:19-op-45149	N.D. Ohio (Federal)
MS	City of Starkville	1:19-op-45148	N.D. Ohio (Federal)
MS	City of Tupelo	1:19-op-45491	N.D. Ohio (Federal)
MS	City of Verona	1:19-op-45150	N.D. Ohio (Federal)
MS	City of Vicksburg	1:19-op-45881	N.D. Ohio (Federal)
MS	City of Waynesboro	1:21-op-45050	N.D. Ohio (Federal)
MS	City of Webb	1:21-op-45015	N.D. Ohio (Federal)
MS	City of Wiggins	1:19-op-45576	N.D. Ohio (Federal)
MS	County of Adams	1:18-op-45831	N.D. Ohio (Federal)
MS	County of Amite	1:18-op-45097	N.D. Ohio (Federal)

State	Subdivision/Special District	Case No.	Jurisdiction
MS	County of Attala	1:19-op-45869	N.D. Ohio (Federal)
MS	County of Benton	1:18-op-45119	N.D. Ohio (Federal)
MS	County of Bolivar	1:20-op-45214	N.D. Ohio (Federal)
MS	County of Carroll	1:19-op-45156	N.D. Ohio (Federal)
MS	County of Chickasaw	1:19-op-45158	N.D. Ohio (Federal)
MS	County of Claiborne	1:18-op-45035	N.D. Ohio (Federal)
MS	County of Clarke	1:18-op-45278	N.D. Ohio (Federal)
MS	County of Covington	1:19-op-45417	N.D. Ohio (Federal)
MS	County of Desoto	1:19-op-45551	N.D. Ohio (Federal)
MS	County of Forrest	1:18-op-45147	N.D. Ohio (Federal)
MS	County of Franklin	1:19-op-45577	N.D. Ohio (Federal)
MS	County of George	1:19-op-45157	N.D. Ohio (Federal)
MS	County of Greene	1:19-op-45965	N.D. Ohio (Federal)
MS	County of Grenada	1:18-op-46279	N.D. Ohio (Federal)
MS	County of Hancock	1:18-op-45762	N.D. Ohio (Federal)
MS	County of Harrison	1:19-op-45113	N.D. Ohio (Federal)
MS	County of Hinds	1:20-op-45190	N.D. Ohio (Federal)
MS	County of Holmes	1:18-op-45793	N.D. Ohio (Federal)
MS	County of Humphreys	1:18-op-45021	N.D. Ohio (Federal)
MS	County of Issaquena	1:18-op-45764	N.D. Ohio (Federal)
MS	County of Itawamba	1:18-op-45396	N.D. Ohio (Federal)
MS	County of Jackson	1:19-op-45876	N.D. Ohio (Federal)
MS	County of Jefferson	1:18-op-45839	N.D. Ohio (Federal)
MS	County of Jefferson Davis	1:18-op-45070	N.D. Ohio (Federal)
MS	County of Jones	1:19-op-45875	N.D. Ohio (Federal)
MS	County of Kemper	1:19-op-45870	N.D. Ohio (Federal)
MS	County of LaFayette	1:19-op-45341	N.D. Ohio (Federal)
MS	County of Lauderdale	1:19-op-46060	N.D. Ohio (Federal)
MS	County of Lawrence	1:18-op-45036	N.D. Ohio (Federal)
MS	County of Lee	1:19-op-45160	N.D. Ohio (Federal)
MS	County of LeFlore	1:19-op-45552	N.D. Ohio (Federal)
MS	County of Lincoln	1:18-op-45722	N.D. Ohio (Federal)
MS	County of Madison	1:20-op-45106	N.D. Ohio (Federal)
MS	County of Marion	1:18-op-45075	N.D. Ohio (Federal)
MS	County of Marshall	1:18-op-45397	N.D. Ohio (Federal)
MS	County of Monroe	1:18-op-46173	N.D. Ohio (Federal)
MS	County of Neshoba	1:18-op-45843	N.D. Ohio (Federal)
MS	County of Panola	1:19-op-45154	N.D. Ohio (Federal)
MS	County of Pearl River	1:19-op-45548	N.D. Ohio (Federal)
MS	County of Perry	1:18-op-45778	N.D. Ohio (Federal)
MS	County of Prentiss	1:18-op-45723	N.D. Ohio (Federal)
MS	County of Scott	1:20-op-45238	N.D. Ohio (Federal)
MS	County of Stone	1:18-op-45775 / 1:20-op-45168	N.D. Ohio (Federal)
MS	County of Sunflower	1:18-op-45020	N.D. Ohio (Federal)
MS	County of Tallahatchie	1:18-op-45399	N.D. Ohio (Federal)
MS	County of Tate	1:19-op-45153	N.D. Ohio (Federal)

State	Subdivision/Special District	Case No.	Jurisdiction
MS	County of Tippah	1:18-op-45118	N.D. Ohio (Federal)
MS	County of Tishomingo	1:20-op-45039	N.D. Ohio (Federal)
MS	County of Tunica	1:20-op-45213	N.D. Ohio (Federal)
MS	County of Union	1:18-op-45120	N.D. Ohio (Federal)
MS	County of Walthall	1:18-op-45411	N.D. Ohio (Federal)
MS	County of Washington	1:18-op-45022	N.D. Ohio (Federal)
MS	County of Wayne	1:19-op-45877	N.D. Ohio (Federal)
MS	County of Yalobusha	1:19-op-45152	N.D. Ohio (Federal)
MS	Greenwood LeFlore Hospital	1:18-op-45551	N.D. Ohio (Federal)
MS	Memorial Hospital at Gulfport	1:20-op-45127	N.D. Ohio (Federal)
MS	Monroe County Healthcare Authority d/b/a Monroe County Hospital	1:17-op-45175	N.D. Ohio (Federal)
MS	Pearl River County Hospital & Nursing Home	1:19-op-45659	N.D. Ohio (Federal)
MS	Sharkey-Issaquena Community Hospital	1:18-op-45765	N.D. Ohio (Federal)
MS	South Central Regional Medical Center	1:18-op-45763	N.D. Ohio (Federal)
MS	South Sunflower County Hospital	25CI1:20-cv-00291	MS - Circuit Court of Hinds County (State)
MS	Southwest Mississippi Regional Medical Center	1:17-op-45175	N.D. Ohio (Federal)
MS	Town of Arcola	1:19-op-45419	N.D. Ohio (Federal)
MS	Town of Caledonia	1:19-op-45057	N.D. Ohio (Federal)
MS	Town of Centreville	1:19-op-45425	N.D. Ohio (Federal)
MS	Town of Leakesville	1:21-op-45008	N.D. Ohio (Federal)
MS	Town of McLain	1:21-op-45009	N.D. Ohio (Federal)
MS	Town of Shubuta	1:20-op-45283 / 1:21-op-45007	N.D. Ohio (Federal)
MS	Town of Summit	1:19-op-45418	N.D. Ohio (Federal)
MT	City of Great Falls	1:19-op-45083	N.D. Ohio (Federal)
MT	City of Missoula	1:19-op-45083	N.D. Ohio (Federal)
MT	County of Anaconda-Deer Lodge	1:19-op-45083	N.D. Ohio (Federal)
MT	County of Cascade	1:18-op-45033	N.D. Ohio (Federal)
MT	County of Lake	1:19-op-45083	N.D. Ohio (Federal)
MT	County of Missoula	1:19-op-45112	N.D. Ohio (Federal)
NC	City of Canton	1:19-op-45462	N.D. Ohio (Federal)
NC	City of Fayetteville	1:18-op-45726	N.D. Ohio (Federal)
NC	City of Greensboro	1:19-op-45289	N.D. Ohio (Federal)
NC	City of Henderson	1:18-op-45768	N.D. Ohio (Federal)
NC	City of Hickory	1:18-op-46307	N.D. Ohio (Federal)
NC	City of Jacksonville	1:18-op-45115	N.D. Ohio (Federal)
NC	City of Wilmington	1:18-op-45684	N.D. Ohio (Federal)
NC	City of Winston-Salem	1:18-op-45658	N.D. Ohio (Federal)
NC	County of Alamance	1:19-op-45615	N.D. Ohio (Federal)
NC	County of Alexander	1:18-op-46205	N.D. Ohio (Federal)
NC	County of Alleghany	1:18-op-46019	N.D. Ohio (Federal)
NC	County of Anson	1:18-op-46364	N.D. Ohio (Federal)
NC	County of Ashe	1:18-op-46185	N.D. Ohio (Federal)
NC	County of Beaufort	1:18-op-45261	N.D. Ohio (Federal)
NC	County of Bertie	1:19-op-45759	N.D. Ohio (Federal)
NC	County of Bladen	1:19-op-45557	N.D. Ohio (Federal)
NC	County of Brunswick	1:18-op-45222	N.D. Ohio (Federal)

State	Subdivision/Special District	Case No.	Jurisdiction
NC	County of Buncombe	1:17-op-45153	N.D. Ohio (Federal)
NC	County of Burke	1:18-op-45184	N.D. Ohio (Federal)
NC	County of Cabarrus	1:18-op-45747	N.D. Ohio (Federal)
NC	County of Caldwell	1:18-op-45263	N.D. Ohio (Federal)
NC	County of Camden	1:19-op-45001	N.D. Ohio (Federal)
NC	County of Carteret	1:18-op-45587	N.D. Ohio (Federal)
NC	County of Caswell	1:18-op-45875	N.D. Ohio (Federal)
NC	County of Catawba	1:18-op-45145	N.D. Ohio (Federal)
NC	County of Chatham	1:19-op-45462	N.D. Ohio (Federal)
NC	County of Cherokee	1:18-op-45979	N.D. Ohio (Federal)
NC	County of Chowan	1:18-op-46175	N.D. Ohio (Federal)
NC	County of Cleveland	1:18-op-45304	N.D. Ohio (Federal)
NC	County of Columbus	1:18-op-45847	N.D. Ohio (Federal)
NC	County of Craven	1:18-op-45660	N.D. Ohio (Federal)
NC	County of Cumberland	1:18-op-46031	N.D. Ohio (Federal)
NC	County of Currituck	1:18-op-46174	N.D. Ohio (Federal)
NC	County of Dare	1:18-op-45683	N.D. Ohio (Federal)
NC	County of Davidson	1:18-op-46330	N.D. Ohio (Federal)
NC	County of Davie	1:18-op-46207	N.D. Ohio (Federal)
NC	County of Duplin	1:19-op-45040	N.D. Ohio (Federal)
NC	County of Durham	1:19-op-45346	N.D. Ohio (Federal)
NC	County of Forsyth	1:18-op-45605	N.D. Ohio (Federal)
NC	County of Franklin	1:18-op-46216	N.D. Ohio (Federal)
NC	County of Gaston	1:18-op-45166	N.D. Ohio (Federal)
NC	County of Granville	1:19-op-45342	N.D. Ohio (Federal)
NC	County of Greene	1:18-op-45584	N.D. Ohio (Federal)
NC	County of Guilford	1:19-op-45340	N.D. Ohio (Federal)
NC	County of Halifax	1:18-op-45376	N.D. Ohio (Federal)
NC	County of Haywood	1:19-op-45014	N.D. Ohio (Federal)
NC	County of Iredell	1:18-op-45774	N.D. Ohio (Federal)
NC	County of Jones	1:19-op-45142	N.D. Ohio (Federal)
NC	County of Lee	1:19-op-45290	N.D. Ohio (Federal)
NC	County of Lenoir	1:18-op-45991	N.D. Ohio (Federal)
NC	County of Lincoln	1:18-op-45719	N.D. Ohio (Federal)
NC	County of Madison	1:18-op-46067	N.D. Ohio (Federal)
NC	County of Martin	1:18-op-45522	N.D. Ohio (Federal)
NC	County of McDowell	1:18-op-45524	N.D. Ohio (Federal)
NC	County of Mecklenburg	1:18-op-45221	N.D. Ohio (Federal)
NC	County of Mitchell	1:19-op-45550	N.D. Ohio (Federal)
NC	County of Moore	1:18-op-46028	N.D. Ohio (Federal)
NC	County of New Hanover	1:18-op-45006	N.D. Ohio (Federal)
NC	County of Onslow	1:18-op-45114	N.D. Ohio (Federal)
NC	County of Orange	1:18-op-45308	N.D. Ohio (Federal)
NC	County of Pamlico	1:19-op-45049	N.D. Ohio (Federal)
NC	County of Pasquotank	1:18-op-45986	N.D. Ohio (Federal)
NC	County of Person	1:18-op-45276	N.D. Ohio (Federal)
NC	County of Pitt	1:18-op-45208	N.D. Ohio (Federal)

State	Subdivision/Special District	Case No.	Jurisdiction
NC	County of Polk	1:18-op-45900	N.D. Ohio (Federal)
NC	County of Randolph	1:18-op-45275	N.D. Ohio (Federal)
NC	County of Richmond	1:18-op-45586	N.D. Ohio (Federal)
NC	County of Robeson	1:18-op-46141	N.D. Ohio (Federal)
NC	County of Rockingham	1:18-op-45015	N.D. Ohio (Federal)
NC	County of Rowan	1:18-op-45799	N.D. Ohio (Federal)
NC	County of Rutherford	1:18-op-45243	N.D. Ohio (Federal)
NC	County of Sampson	1:19-op-45583	N.D. Ohio (Federal)
NC	County of Scotland	1:19-op-45336	N.D. Ohio (Federal)
NC	County of Stokes	1:18-op-45185	N.D. Ohio (Federal)
NC	County of Surry	1:18-op-45086	N.D. Ohio (Federal)
NC	County of Tyrrell	1:18-op-45725	N.D. Ohio (Federal)
NC	County of Vance	1:18-op-45759	N.D. Ohio (Federal)
NC	County of Warren	1:18-op-45536	N.D. Ohio (Federal)
NC	County of Washington	1:19-op-45002	N.D. Ohio (Federal)
NC	County of Watauga	1:18-op-45525	N.D. Ohio (Federal)
NC	County of Wayne	1:18-op-45585	N.D. Ohio (Federal)
NC	County of Wilkes	1:18-op-45239	N.D. Ohio (Federal)
NC	County of Yadkin	1:18-op-45014	N.D. Ohio (Federal)
NC	County of Yancey	1:18-op-46071	N.D. Ohio (Federal)
ND	City of Bismarck	1:19-op-45629	N.D. Ohio (Federal)
ND	City of Devils Lake	1:19-op-45637	N.D. Ohio (Federal)
ND	City of Fargo	1:19-op-45675	N.D. Ohio (Federal)
ND	City of Grand Forks	1:19-op-45276	N.D. Ohio (Federal)
ND	City of Lisbon	1:19-op-45761	N.D. Ohio (Federal)
ND	County of Barnes	1:19-op-45640	N.D. Ohio (Federal)
ND	County of Benson	1:19-op-45643	N.D. Ohio (Federal)
ND	County of Burleigh	1:19-op-45630	N.D. Ohio (Federal)
ND	County of Cass	1:19-op-45276	N.D. Ohio (Federal)
ND	County of Dickey	1:19-op-45919	N.D. Ohio (Federal)
ND	County of Dunn	1:19-op-45631	N.D. Ohio (Federal)
ND	County of Eddy	1:19-op-45917	N.D. Ohio (Federal)
ND	County of Foster	1:19-op-45918	N.D. Ohio (Federal)
ND	County of Grand Forks	1:19-op-45647	N.D. Ohio (Federal)
ND	County of LaMoure	1:19-op-45760	N.D. Ohio (Federal)
ND	County of McKenzie	1:19-op-46134	N.D. Ohio (Federal)
ND	County of McLean	1:19-op-45632	N.D. Ohio (Federal)
ND	County of Mercer	1:19-op-45635	N.D. Ohio (Federal)
ND	County of Mountrail	1:19-op-45634	N.D. Ohio (Federal)
ND	County of Pembina	1:19-op-45674	N.D. Ohio (Federal)
ND	County of Pierce	1:19-op-45683	N.D. Ohio (Federal)
ND	County of Ramsey	1:19-op-45641	N.D. Ohio (Federal)
ND	County of Ransom	1:19-op-45645	N.D. Ohio (Federal)
ND	County of Richland	1:19-op-45644	N.D. Ohio (Federal)
ND	County of Rolette	1:19-op-45646	N.D. Ohio (Federal)
ND	County of Sargent	1:19-op-45642	N.D. Ohio (Federal)
ND	County of Stark	1:19-op-45763	N.D. Ohio (Federal)

State	Subdivision/Special District	Case No.	Jurisdiction
ND	County of Towner	1:19-op-45639	N.D. Ohio (Federal)
ND	County of Walsh	1:19-op-45638	N.D. Ohio (Federal)
ND	County of Ward	1:19-op-45762	N.D. Ohio (Federal)
ND	County of Wells	1:19-op-45682	N.D. Ohio (Federal)
ND	County of Williams	1:19-op-45633	N.D. Ohio (Federal)
NE	City of South Sioux City	1:19-op-45553	N.D. Ohio (Federal)
NE	County of Douglas	1:19-op-45068	N.D. Ohio (Federal)
NE	County of Keith	1:19-op-45263	N.D. Ohio (Federal)
NE	County of Knox	1:18-op-45555	N.D. Ohio (Federal)
NE	County of Lincoln	1:19-op-45099	N.D. Ohio (Federal)
NE	County of Sarpy	1:18-op-46038	N.D. Ohio (Federal)
NH	Board of Education of Goshen School District	1:20-op-45281	N.D. Ohio (Federal)
NH	Board of Education of Kearsarge Regional School Unit - School Administrative Unit 65	1:20-op-45281	N.D. Ohio (Federal)
NH	Board of Education of Lebanon School District	1:20-op-45281	N.D. Ohio (Federal)
NH	Board of Education of Pittsfield School District	1:20-op-45281	N.D. Ohio (Federal)
NH	Board of Education of Tamworth School District	1:20-op-45281	N.D. Ohio (Federal)
NH	City of Belmont	1:19-op-45707	N.D. Ohio (Federal)
NH	City of Berlin	1:18-op-46040	N.D. Ohio (Federal)
NH	City of Claremont	1:19-op-45690	N.D. Ohio (Federal)
NH	City of Concord	1:18-op-45573	N.D. Ohio (Federal)
NH	City of Dover	1:18-op-45573	N.D. Ohio (Federal)
NH	City of Franklin	1:18-op-45728	N.D. Ohio (Federal)
NH	City of Keene	1:18-op-45511	N.D. Ohio (Federal)
NH	City of Laconia	1:18-op-45583	N.D. Ohio (Federal)
NH	City of Manchester	1:17-op-45163	N.D. Ohio (Federal)
NH	City of Nashua	1:18-op-45062	N.D. Ohio (Federal)
NH	City of Rochester	1:18-op-46106	N.D. Ohio (Federal)
NH	County of Belknap	1:19-op-45705	N.D. Ohio (Federal)
NH	County of Carroll	1:19-op-46137	N.D. Ohio (Federal)
NH	County of Cheshire	1:19-op-45706	N.D. Ohio (Federal)
NH	County of Coos	1:19-op-46136	N.D. Ohio (Federal)
NH	County of Grafton	1:19-op-45691	N.D. Ohio (Federal)
NH	County of Hillsborough	1:18-op-46353	N.D. Ohio (Federal)
NH	County of Merrimack	1:18-op-46106	N.D. Ohio (Federal)
NH	County of Rockingham	1:19-op-45703	N.D. Ohio (Federal)
NH	County of Strafford	1:19-op-45689	N.D. Ohio (Federal)
NH	County of Sullivan	1:19-op-45704	N.D. Ohio (Federal)
NH	Town of Derry	1:18-op-45582	N.D. Ohio (Federal)
NH	Town of Londonderry	1:18-op-45727	N.D. Ohio (Federal)
NJ	Borough of Paramus	1:19-op-46046	N.D. Ohio (Federal)
NJ	Borough of Ridgefield	1:18-op-46117	N.D. Ohio (Federal)
NJ	City of Bayonne	1:19-op-46044	N.D. Ohio (Federal)
NJ	City of Clifton	1:19-op-46076	N.D. Ohio (Federal)
NJ	City of Elizabeth	1:19-op-46045	N.D. Ohio (Federal)
NJ	City of Newark	1:18-op-45761	N.D. Ohio (Federal)
NJ	City of Paterson	1:18-op-45371	N.D. Ohio (Federal)

State	Subdivision/Special District	Case No.	Jurisdiction
NJ	City of Trenton	1:19-op-46158	N.D. Ohio (Federal)
NJ	City of Vineland	CUM-L-000422-22	NJ - Superior Court of Cumberland County (State)
NJ	County of Atlantic	1:19-op-46071	N.D. Ohio (Federal)
NJ	County of Burlington	1:19-op-45928	N.D. Ohio (Federal)
NJ	County of Cumberland	1:19-op-46016	N.D. Ohio (Federal)
NJ	County of Hudson	1:18-op-45937	N.D. Ohio (Federal)
NJ	County of Monmouth	1:18-op-46118	N.D. Ohio (Federal)
NJ	County of Ocean	1:19-op-46157	N.D. Ohio (Federal)
NJ	County of Union	1:19-op-45374	N.D. Ohio (Federal)
NJ	Town of Clinton	1:19-op-46085	N.D. Ohio (Federal)
NJ	Township of Barnegat	1:19-op-45925	N.D. Ohio (Federal)
NJ	Township of Bloomfield	1:18-op-45053	N.D. Ohio (Federal)
NJ	Township of Brick	1:19-op-45924	N.D. Ohio (Federal)
NJ	Township of Irvington	1:17-op-45156	N.D. Ohio (Federal)
NJ	Township of Saddle Brook	1:19-op-45431	N.D. Ohio (Federal)
NM	City of Alamogordo	1:19-op-46067	N.D. Ohio (Federal)
NM	City of Espanola	1:19-op-46142	N.D. Ohio (Federal)
NM	City of Hobbs	1:19-op-46068	N.D. Ohio (Federal)
NM	City of Las Cruces	1:21-op-45059	N.D. Ohio (Federal)
NM	City of Santa Fe	D-101-CV-2019-01809	NM - County of Santa Fe, 1st Judicial District (State)
NM	County of Bernalillo (Board of County Commissioners)	1:19-op-45301	N.D. Ohio (Federal)
NM	County of Catron (Board of County Commissioners)	1:19-op-45320	N.D. Ohio (Federal)
NM	County of Cibola (Board of County Commissioners)	1:19-op-45321	N.D. Ohio (Federal)
NM	County of Colfax (Board of County Commissioners)	1:21-op-45055	N.D. Ohio (Federal)
NM	County of Curry (Board of County Commissioners)	1:19-op-45347	N.D. Ohio (Federal)
NM	County of Dona Ana (Board of County Commissioners)	1:18-op-46206	N.D. Ohio (Federal)
NM	County of Eddy	1:22-op-45015	N.D. Ohio (Federal)
NM	County of Grant	1:19-op-45108	N.D. Ohio (Federal)
NM	County of Hidalgo (Board of County Commissioners)	1:19-op-46069	N.D. Ohio (Federal)
NM	County of Lea (Board of County Commissioners)	1:19-op-45266	N.D. Ohio (Federal)
NM	County of Lincoln (Board of County Commissioners)	1:19-op-45513	N.D. Ohio (Federal)
NM	County of Luna (Board of County Commissioners)	1:21-op-45056	N.D. Ohio (Federal)
NM	County of McKinley (Board of County Commissioners)	1:19-op-45033	N.D. Ohio (Federal)
NM	County of Mora	1:17-op-45080	N.D. Ohio (Federal)
NM	County of Otero (Board of County Commissioners)	1:19-op-45216	N.D. Ohio (Federal)
NM	County of Rio Arriba	1:19-op-45054	N.D. Ohio (Federal)
NM	County of Roosevelt	1:18-op-46343	N.D. Ohio (Federal)

State	Subdivision/Special District	Case No.	Jurisdiction
NM	County of San Juan	1:18-op-45829	N.D. Ohio (Federal)
NM	County of San Miguel (Board of County Commissioners)	1:19-op-45354	N.D. Ohio (Federal)
NM	County of Sandoval	1:19-op-45421	N.D. Ohio (Federal)
NM	County of Santa Fe (Board of County Commissioners)	1:18-op-45776	N.D. Ohio (Federal)
NM	County of Sierra (Board of County Commissioners)	1:19-op-45322	N.D. Ohio (Federal)
NM	County of Socorro (Board of County Commissioners)	1:19-op-45323	N.D. Ohio (Federal)
NM	County of Taos (Board of County Commissioners)	1:19-op-45051	N.D. Ohio (Federal)
NM	County of Torrance (Board of County Commissioners)	1:22-op-45004	N.D. Ohio (Federal)
NM	County of Union (Board of County Commissioners)	1:21-op-45057	N.D. Ohio (Federal)
NM	County of Valencia (Board of County Commissioners)	1:19-op-45324	N.D. Ohio (Federal)
NV	Central Lyon County Fire Protection District	20-CV-00795	NV - 3rd Judicial District Court, Lyon County (State)
NV	City of Boulder	1:19-op-45648	N.D. Ohio (Federal)
NV	City of Carson	20 TRT 000471B	NV - 1st Judicial District Court, Carson City County (State)
NV	City of Ely	CV2007077	NV - 7th Judicial District Court, White Pine County (State)
NV	City of Fernley	20-CV-00796	NV - 3rd Judicial District Court, Lyon County (State)
NV	City of Henderson	A-19-800695-B	NV - 8th Judicial District Court, Clark County (State)
NV	City of Las Vegas	A-19-800697-B	NV - 8th Judicial District Court, Clark County (State)
NV	City of Mesquite	1:19-op-45649	N.D. Ohio (Federal)
NV	City of North Las Vegas	A-19-800699-B	NV - 8th Judicial District Court, Clark County (State)
NV	City of Reno	CV18-01895	NV - 2nd Judicial District Court, Washoe County (State)
NV	City of Sparks	CV20-01152	NV - 2nd Judicial District Court, Washoe County (State)
NV	City of West Wendover	DC-CV-20-70	NV - 4th Judicial District Court, Elko County (State)
NV	County of Churchill	20-100C-0805	NV - 10th Judicial District Court, Churchill County (State)
NV	County of Clark	1:19-op-46168	N.D. Ohio (Federal)
NV	County of Douglas	2020 CV 00139	NV - 9th Judicial District Court, Douglas County (State)
NV	County of Esmeralda	CV20-5117	NV - 5th Judicial District Court, Esmeralda County (State)
NV	County of Humboldt	CV2022306	NV - 6th Judicial District Court, Humboldt County (State)
NV	County of Lincoln	CV0702620	NV - 7th Judicial District Court, Lincoln County (State)
NV	County of Lyon	20-CV-00795	NV - 3rd Judicial District Court, Lyon County (State)

State	Subdivision/Special District	Case No.	Jurisdiction
NV	County of Mineral	21CV-TT12-2020-0104	NV - 11th Judicial District Court, Mineral County (State)
NV	County of Nye	1:18-op-46238	N.D. Ohio (Federal)
NV	County of Washoe	CV20-01142	NV - 2nd Judicial District Court, Washoe County (State)
NV	County of White Pine	CV2007076	NV - 7th Judicial District Court, White Pine County (State)
NV	North Lyon County Fire Protection District	20-CV-00795	NV - 3rd Judicial District Court, Lyon County (State)
OH	Board of Education of Boardman Local Schools	1:22-op-45023	N.D. Ohio (Federal)
OH	Board of Education of Liberty Local Schools	1:22-op-45023	N.D. Ohio (Federal)
OH	City of Ashland	1:18-op-46203	N.D. Ohio (Federal)
OH	City of Aurora (Law Director Dean E. DePiero)	1:18-op-45993	N.D. Ohio (Federal)
OH	City of Barberton	1:18-op-45767	N.D. Ohio (Federal)
OH	City of Broadview Heights	1:18-op-45330	N.D. Ohio (Federal)
OH	City of Brunswick	1:18-op-45199	N.D. Ohio (Federal)
OH	City of Cincinnati	1:17-op-45041	N.D. Ohio (Federal)
OH	City of Cleveland	1:18-op-45132	N.D. Ohio (Federal)
OH	City of Columbus	1:18-op-45048	N.D. Ohio (Federal)
OH	City of Cuyahoga Falls	1:18-op-45767	N.D. Ohio (Federal)
OH	City of Dayton	1:17-op-45032	N.D. Ohio (Federal)
OH	City of East Cleveland	1:18-op-45448	N.D. Ohio (Federal)
OH	City of Elyria	1:18-op-45080	N.D. Ohio (Federal)
OH	City of Euclid	1:18-op-46013	N.D. Ohio (Federal)
OH	City of Fairfield	1:19-op-45742	N.D. Ohio (Federal)
OH	City of Fairlawn	1:18-op-45767	N.D. Ohio (Federal)
OH	City of Findlay	1:18-op-46339	N.D. Ohio (Federal)
OH	City of Fostoria	1:18-op-45433	N.D. Ohio (Federal)
OH	City of Garfield Heights	1:18-op-45999	N.D. Ohio (Federal)
OH	City of Green	1:18-op-45767	N.D. Ohio (Federal)
OH	City of Hamilton	1:18-op-46024	N.D. Ohio (Federal)
OH	City of Huron	1:18-op-45431	N.D. Ohio (Federal)
OH	City of Ironton	1:18-op-46025	N.D. Ohio (Federal)
OH	City of Kent (Law Director Hope L. Jones)	1:18-op-45993	N.D. Ohio (Federal)
OH	City of Lakewood	1:18-op-45240	N.D. Ohio (Federal)
OH	City of Lebanon	1:18-op-45163	N.D. Ohio (Federal)
OH	City of Lima	1:18-op-45333	N.D. Ohio (Federal)
OH	City of Lorain	1:17-op-45000	N.D. Ohio (Federal)
OH	City of Lyndhurst	1:18-op-45636	N.D. Ohio (Federal)
OH	City of Macedonia	1:18-op-45447	N.D. Ohio (Federal)
OH	City of Mansfield	1:18-op-45380	N.D. Ohio (Federal)
OH	City of Marietta	1:19-op-45230	N.D. Ohio (Federal)
OH	City of Mayfield Heights	1:18-op-45635	N.D. Ohio (Federal)
OH	City of Middletown	1:19-op-46133	N.D. Ohio (Federal)
OH	City of Munroe Falls	1:18-op-45767	N.D. Ohio (Federal)
OH	City of New Franklin	1:18-op-45767	N.D. Ohio (Federal)
OH	City of North Olmsted	1:18-op-46012	N.D. Ohio (Federal)
OH	City of North Ridgeville	1:18-op-46015	N.D. Ohio (Federal)

State	Subdivision/Special District	Case No.	Jurisdiction
OH	City of North Royalton	1:18-op-45427	N.D. Ohio (Federal)
OH	City of Norton	1:18-op-45767	N.D. Ohio (Federal)
OH	City of Norwalk	1:18-op-46351	N.D. Ohio (Federal)
OH	City of Olmsted Falls	1:18-op-46014	N.D. Ohio (Federal)
OH	City of Parma	1:17-op-45001	N.D. Ohio (Federal)
OH	City of Parma Heights	1:18-op-45773	N.D. Ohio (Federal)
OH	City of Portsmouth	1:17-op-45042	N.D. Ohio (Federal)
OH	City of Ravenna (Law Director Frank J. Cimino)	1:18-op-45993	N.D. Ohio (Federal)
OH	City of Sandusky	1:18-op-45788	N.D. Ohio (Federal)
OH	City of Seven Hills	1:19-op-45413	N.D. Ohio (Federal)
OH	City of St. Marys	1:18-op-45638	N.D. Ohio (Federal)
OH	City of Stow	1:18-op-45767	N.D. Ohio (Federal)
OH	City of Strongsville	1:18-op-46111	N.D. Ohio (Federal)
OH	City of Tallmadge	1:18-op-45767	N.D. Ohio (Federal)
OH	City of Toledo	1:17-op-45005	N.D. Ohio (Federal)
OH	City of Van Wert	1:18-op-46345	N.D. Ohio (Federal)
OH	City of Warren	1:18-op-45434	N.D. Ohio (Federal)
OH	City of Warrensville Heights	1:18-op-46299	N.D. Ohio (Federal)
OH	City of Wickliffe	1:18-op-45637	N.D. Ohio (Federal)
OH	City of Youngstown	1:19-op-45722	N.D. Ohio (Federal)
OH	County of Adams (Board of County Commissioners)	1:18-op-45042	N.D. Ohio (Federal)
OH	County of Allen (Board of County Commissioners)	1:18-op-45401	N.D. Ohio (Federal)
OH	County of Ashland (Board of County Commissioners)	1:18-op-45012	N.D. Ohio (Federal)
OH	County of Ashtabula	1:18-op-45050	N.D. Ohio (Federal)
OH	County of Athens (Board of County Commissioners)	1:18-op-45326	N.D. Ohio (Federal)
OH	County of Auglaize (Board of County Commissioners)	1:18-op-45570	N.D. Ohio (Federal)
OH	County of Belmont (Board of County Commissioners)	1:17-op-45034	N.D. Ohio (Federal)
OH	County of Brown (Board of County Commissioners)	1:17-op-45035	N.D. Ohio (Federal)
OH	County of Butler (Board of County Commissioners)	1:18-op-45037	N.D. Ohio (Federal)
OH	County of Carroll (Board of County Commissioners)	1:18-op-46079	N.D. Ohio (Federal)
OH	County of Champaign (Board of County Commissioners)	1:18-op-45065	N.D. Ohio (Federal)
OH	County of Clermont (Board of County Commissioners)	1:17-op-45033	N.D. Ohio (Federal)
OH	County of Clinton (Board of County Commissioners)	1:18-op-45060	N.D. Ohio (Federal)
OH	County of Columbiana (Board of County Commissioners)	1:18-op-45289	N.D. Ohio (Federal)
OH	County of Coshocton (Board of County Commissioners)	1:18-op-45027	N.D. Ohio (Federal)
OH	County of Crawford (Board of County Commissioners)	1:18-op-45288	N.D. Ohio (Federal)

State	Subdivision/Special District	Case No.	Jurisdiction
OH	County of Darke (Board of County Commissioners)	1:18-op-45046	N.D. Ohio (Federal)
OH	County of Delaware (Board of County Commissioners)	1:18-op-45266	N.D. Ohio (Federal)
OH	County of Erie (Board of County Commissioners)	1:18-op-45291	N.D. Ohio (Federal)
OH	County of Fairfield (Board of County Commissioners)	1:18-op-45038	N.D. Ohio (Federal)
OH	County of Franklin (Board of County Commissioners)	1:18-op-45162	N.D. Ohio (Federal)
OH	County of Fulton (Board of County Commissioners)	1:19-op-45440	N.D. Ohio (Federal)
OH	County of Gallia (Board of County Commissioners)	1:17-op-45043	N.D. Ohio (Federal)
OH	County of Geauga (Board of County Commissioners)	1:18-op-45256	N.D. Ohio (Federal)
OH	County of Guernsey (Board of County Commissioners)	1:18-op-45044	N.D. Ohio (Federal)
OH	County of Hamilton (Board of County Commissioners)	1:18-op-45272	N.D. Ohio (Federal)
OH	County of Hancock (Board of County Commissioners)	1:18-op-45572	N.D. Ohio (Federal)
OH	County of Harrison (Board of County Commissioners)	1:18-op-45547	N.D. Ohio (Federal)
OH	County of Hocking (Board of County Commissioners)	1:17-op-45044	N.D. Ohio (Federal)
OH	County of Huron (Board of County Commissioners)	1:18-op-45292	N.D. Ohio (Federal)
OH	County of Jackson (Board of County Commissioners)	1:17-op-45037	N.D. Ohio (Federal)
OH	County of Jefferson	1:18-op-45365	N.D. Ohio (Federal)
OH	County of Knox (Board of County Commissioners)	1:18-op-45665	N.D. Ohio (Federal)
OH	County of Lake	1:18-op-45032	N.D. Ohio (Federal)
OH	County of Lawrence (Board of County Commissioners)	1:17-op-45045	N.D. Ohio (Federal)
OH	County of Licking (Board of County Commissioners)	1:18-op-45041	N.D. Ohio (Federal)
OH	County of Logan (Board of County Commissioners)	1:18-op-45047	N.D. Ohio (Federal)
OH	County of Lorain	1:18-op-45078	N.D. Ohio (Federal)
OH	County of Lucas (Board of County Commissioners)	1:18-op-46177	N.D. Ohio (Federal)
OH	County of Marion (Board of County Commissioners)	1:18-op-45529	N.D. Ohio (Federal)
OH	County of Medina (Prosecuting Attorney S. Forrest Thompson)	1:19-op-45839	N.D. Ohio (Federal)
OH	County of Meigs	1:19-op-45229	N.D. Ohio (Federal)
OH	County of Mercer (Board of County Commissioners)	1:18-op-46094	N.D. Ohio (Federal)
OH	County of Miami (Board of County Commissioners)	1:19-op-45335	N.D. Ohio (Federal)
OH	County of Monroe (Board of County	1:18-op-45597	N.D. Ohio (Federal)

State	Subdivision/Special District	Case No.	Jurisdiction
	Commissioners)		
OH	County of Montgomery (Board of County Commissioners and Prosecuting Attorney Mathias H. Heck, Jr.)	1:18-op-46080	N.D. Ohio (Federal)
OH	County of Morrow (Board of County Commissioners)	1:18-op-45059	N.D. Ohio (Federal)
OH	County of Muskingum (Board of County Commissioners)	1:18-op-45137	N.D. Ohio (Federal)
OH	County of Noble (Board of County Commissioners)	1:19-op-45096	N.D. Ohio (Federal)
OH	County of Ottawa (Board of County Commissioners)	1:18-op-45031	N.D. Ohio (Federal)
OH	County of Perry (Board of County Commissioners)	1:18-op-45245	N.D. Ohio (Federal)
OH	County of Pike (Board of County Commissioners)	1:17-op-45039	N.D. Ohio (Federal)
OH	County of Portage (Board of County Commissioners and County Prosecutor Victor Vigluicci)	1:18-op-45993	N.D. Ohio (Federal)
OH	County of Ross (Board of County Commissioners)	1:17-op-45040	N.D. Ohio (Federal)
OH	County of Sandusky (Board of County Commissioners)	1:18-op-45254	N.D. Ohio (Federal)
OH	County of Scioto (Board of County Commissioners)	1:17-op-45038	N.D. Ohio (Federal)
OH	County of Seneca (Board of County Commissioners)	1:18-op-45290	N.D. Ohio (Federal)
OH	County of Shelby (Board of County Commissioners)	1:18-op-45668	N.D. Ohio (Federal)
OH	County of Stark (Board of County Commissioners)	1:18-op-46340	N.D. Ohio (Federal)
OH	County of Trumball	1:18-op-45079	N.D. Ohio (Federal)
OH	County of Tuscarawas (Prosecuting Attorney Ryan Styer)	1:19-op-45098	N.D. Ohio (Federal)
OH	County of Van Wert (Board of County Commissioners)	1:18-op-45571	N.D. Ohio (Federal)
OH	County of Vinton (Board of County Commissioners)	1:17-op-45036	N.D. Ohio (Federal)
OH	County of Washington	1:19-op-45230	N.D. Ohio (Federal)
OH	County of Wayne (Board of County Commissioners)	1:18-op-45150	N.D. Ohio (Federal)
OH	County of Williams (Board of County Commissioners)	1:18-op-45257	N.D. Ohio (Federal)
OH	County of Wyandot (Board of County Commissioners)	1:18-op-46078	N.D. Ohio (Federal)
OH	Lucas County Children Services Board of Trustees	1:18-op-46177	N.D. Ohio (Federal)
OH	Mental Health and Recovery Services Board of Allen, Auglaize and Hardin Counties	1:18-op-46344	N.D. Ohio (Federal)
OH	Mental Health and Recovery Services Board of Lucas County	1:18-op-46177	N.D. Ohio (Federal)
OH	Richland County Children's Services	1:17-op-45003	N.D. Ohio (Federal)
OH	Township of Boston	1:18-op-45767	N.D. Ohio (Federal)

State	Subdivision/Special District	Case No.	Jurisdiction
OH	Township of Copley	1:18-op-45767	N.D. Ohio (Federal)
OH	Township of Coventry	1:18-op-45767	N.D. Ohio (Federal)
OH	Township of Painesville	1:18-op-46035	N.D. Ohio (Federal)
OH	Township of Springfield	1:18-op-45767	N.D. Ohio (Federal)
OH	Valley Fire District	1:18-op-45767	N.D. Ohio (Federal)
OH	Village of Boston Heights	1:18-op-45767	N.D. Ohio (Federal)
OH	Village of Brooklyn Heights	1:18-op-45450	N.D. Ohio (Federal)
OH	Village of Clinton	1:18-op-45767	N.D. Ohio (Federal)
OH	Village of Lakemore	1:18-op-45767	N.D. Ohio (Federal)
OH	Village of Lexington	1:21-op-45109	N.D. Ohio (Federal)
OH	Village of Mogadore	1:18-op-45767	N.D. Ohio (Federal)
OH	Village of Newburgh Heights	1:18-op-45449	N.D. Ohio (Federal)
OH	Village of Peninsula	1:18-op-45767	N.D. Ohio (Federal)
OH	Village of Richfield	1:18-op-45767	N.D. Ohio (Federal)
OH	Village of Silver Lake	1:18-op-45767	N.D. Ohio (Federal)
OK	City of Ada	1:19-op-45400	N.D. Ohio (Federal)
OK	City of Altus	1:21-op-45046	N.D. Ohio (Federal)
OK	City of Anadarko	1:20-op-45022	N.D. Ohio (Federal)
OK	City of Bethany	1:19-op-46148	N.D. Ohio (Federal)
OK	City of Broken Arrow	1:19-op-45415	N.D. Ohio (Federal)
OK	City of Edmond	1:19-op-45496	N.D. Ohio (Federal)
OK	City of El Reno	1:20-op-45252	N.D. Ohio (Federal)
OK	City of Elk City	1:21-op-45017	N.D. Ohio (Federal)
OK	City of Enid	1:19-op-45717	N.D. Ohio (Federal)
OK	City of Guthrie	1:19-op-45497	N.D. Ohio (Federal)
OK	City of Jenks	1:19-op-45858	N.D. Ohio (Federal)
OK	City of Lawton	1:19-op-45500	N.D. Ohio (Federal)
OK	City of Midwest City	1:19-op-45709	N.D. Ohio (Federal)
OK	City of Muskogee	1:20-op-45162	N.D. Ohio (Federal)
OK	City of Mustang	1:19-op-45708	N.D. Ohio (Federal)
OK	City of Oklahoma City	1:19-op-45498	N.D. Ohio (Federal)
OK	City of Owasso	1:19-op-45718	N.D. Ohio (Federal)
OK	City of Ponca City	1:19-op-45495	N.D. Ohio (Federal)
OK	City of Seminole	1:20-op-45004	N.D. Ohio (Federal)
OK	City of Shawnee	1:19-op-46155	N.D. Ohio (Federal)
OK	City of Stillwater	1:21-op-45045	N.D. Ohio (Federal)
OK	City of Tulsa	1:21-op-45024	N.D. Ohio (Federal)
OK	City of Yukon	1:19-op-45716	N.D. Ohio (Federal)
OK	County of Atoka (Board of County Commissioners)	1:20-op-45001	N.D. Ohio (Federal)
OK	County of Beckham (Board of County Commissioners)	1:20-op-45146	N.D. Ohio (Federal)
OK	County of Caddo (Board of County Commissioners)	1:19-op-46156	N.D. Ohio (Federal)
OK	County of Choctaw (Board of County Commissioners)	1:20-op-45257	N.D. Ohio (Federal)
OK	County of Cimarron (Board of County Commissioners)	1:20-op-45021	N.D. Ohio (Federal)
OK	County of Cleveland (Board of County	1:20-op-45009	N.D. Ohio (Federal)

State	Subdivision/Special District	Case No.	Jurisdiction
	Commissioners)		
OK	County of Coal (Board of County Commissioners	1:20-op-45149	N.D. Ohio (Federal)
OK	County of Comanche (Board of County Commissioners)	1:20-op-45180	N.D. Ohio (Federal)
OK	County of Craig (County Commission)	1:19-op-45652	N.D. Ohio (Federal)
OK	County of Creek (Board of County Commissioners)	1:19-op-45226	N.D. Ohio (Federal)
OK	County of Custer (Board of County Commissioners)	1:20-op-45182	N.D. Ohio (Federal)
OK	County of Delaware (Board of County Commissioners)	1:18-op-46321	N.D. Ohio (Federal)
OK	County of Dewey (Board of County Commissioners)	1:19-op-45801	N.D. Ohio (Federal)
OK	County of Garvin (Board of County Commissioners)	1:18-op-46304	N.D. Ohio (Federal)
OK	County of Grady (Board of County Commissioners)	1:19-op-46167	N.D. Ohio (Federal)
OK	County of Greer (Board of County Commissioners)	1:20-op-45256	N.D. Ohio (Federal)
OK	County of Harmon (Board of County Commissioners)	1:20-op-45388	N.D. Ohio (Federal)
OK	County of Harper (Board of County Commissioners)	1:19-op-45757	N.D. Ohio (Federal)
OK	County of Haskell (Board of County Commissioners)	1:20-op-45002	N.D. Ohio (Federal)
OK	County of Hughes (Board of County Commissioners)	1:20-op-45258	N.D. Ohio (Federal)
OK	County of Jackson (Board of County Commissioners)	1:20-op-45126	N.D. Ohio (Federal)
OK	County of Jefferson (Board of County Commissioners)	1:19-op-46170	N.D. Ohio (Federal)
OK	County of Johnston (Board of County Commissioners)	1:19-op-45765	N.D. Ohio (Federal)
OK	County of Kay (Board of County Commissioners)	1:19-op-45989	N.D. Ohio (Federal)
OK	County of Kiowa (Board of County Commissioners)	1:19-op-45755	N.D. Ohio (Federal)
OK	County of Latimer (Board of County Commissioners)	1:20-op-45003	N.D. Ohio (Federal)
OK	County of Le Flore (Board of County Commissioners)	1:20-op-45067	N.D. Ohio (Federal)
OK	County of Lincoln (Board of County Commissioners)	1:20-op-45128	N.D. Ohio (Federal)
OK	County of Logan (Board of County Commissioners)	1:20-op-45058	N.D. Ohio (Federal)
OK	County of Love (Board of County Commissioners)	1:20-op-45000	N.D. Ohio (Federal)
OK	County of Major (Board of County Commissioners)	1:19-op-45990	N.D. Ohio (Federal)
OK	County of Mayes (County Commission)	1:19-op-45227	N.D. Ohio (Federal)
OK	County of McClain (Board of County Commissioners)	1:18-op-46303	N.D. Ohio (Federal)

State	Subdivision/Special District	Case No.	Jurisdiction
OK	County of McCurtain (Board of County Commissioners)	1:20-op-45259	N.D. Ohio (Federal)
OK	County of Muskogee (Board of County Commissioners)	1:20-op-45155	N.D. Ohio (Federal)
OK	County of Noble (Board of County Commissioners)	1:20-op-45129	N.D. Ohio (Federal)
OK	County of Nowata (Board of County Commissioners)	1:19-op-45225	N.D. Ohio (Federal)
OK	County of Okfuskee (Board of County Commissioners)	1:20-op-45005	N.D. Ohio (Federal)
OK	County of Oklahoma (Board of County Commissioners)	1:20-op-45057	N.D. Ohio (Federal)
OK	County of Okmulgee (County Commission)	1:19-op-45223	N.D. Ohio (Federal)
OK	County of Osage (Board of County Commissioners)	1:18-op-46322	N.D. Ohio (Federal)
OK	County of Ottawa (Board of County Commissioners)	1:18-op-46323	N.D. Ohio (Federal)
OK	County of Pawnee (Board of County Commissioners)	1:18-op-46320	N.D. Ohio (Federal)
OK	County of Payne (County Commission)	1:19-op-45653	N.D. Ohio (Federal)
OK	County of Pittsburg (Board of County Commissioners)	1:19-op-45711	N.D. Ohio (Federal)
OK	County of Pottawatomie (Board of County Commissioners)	1:19-op-45988	N.D. Ohio (Federal)
OK	County of Roger Mills (Board of County Commissioners)	1:20-op-45183	N.D. Ohio (Federal)
OK	County of Rogers (County Commission)	1:19-op-45224	N.D. Ohio (Federal)
OK	County of Seminole (Board of County Commissioners)	1:19-op-45260	N.D. Ohio (Federal)
OK	County of Stephens (Board of County Commissioners)	1:19-op-45756	N.D. Ohio (Federal)
OK	County of Texas (Board of County Commissioners)	1:20-op-45061	N.D. Ohio (Federal)
OK	County of Tillman (Board of County Commissioners)	1:20-op-45185	N.D. Ohio (Federal)
OK	County of Tulsa (Board of County Commissioners)	1:19-op-45352	N.D. Ohio (Federal)
OK	County of Washington (County Commission)	1:19-op-45222	N.D. Ohio (Federal)
OK	County of Woods (Board of County Commissioners)	1:19-op-45987	N.D. Ohio (Federal)
OK	County of Woodward (Board of County Commissioners)	1:20-op-45141	N.D. Ohio (Federal)
OR	City of Portland	1:18-op-45633	N.D. Ohio (Federal)
OR	County of Clackamas	1:18-op-45442	N.D. Ohio (Federal)
OR	County of Coos	1:18-op-46300	N.D. Ohio (Federal)
OR	County of Curry	1:19-op-45512	N.D. Ohio (Federal)
OR	County of Lane	1:18-op-45442	N.D. Ohio (Federal)
OR	County of Multnomah	1:18-op-45377	N.D. Ohio (Federal)
OR	County of Washington	1:18-op-45442	N.D. Ohio (Federal)
PA	Borough of Edwardsville	1:19-op-46176	N.D. Ohio (Federal)
PA	Borough of Exeter	1:20-op-45019	N.D. Ohio (Federal)
PA	Borough of Forty Fort	1:19-op-46177	N.D. Ohio (Federal)

State	Subdivision/Special District	Case No.	Jurisdiction
PA	Borough of Kingston	1:19-op-45585	N.D. Ohio (Federal)
PA	Borough of Morrisville	1:19-op-45435	N.D. Ohio (Federal)
PA	Borough of Sugar Notch	1:20-op-45090	N.D. Ohio (Federal)
PA	Borough of Wampum	180701963 / 2017-008095 (coordinated)	MDL - Pennsylvania Opioid Litigation (PA - Court of Common Pleas of Delaware County) (State MDL)
PA	Borough of West Pittston	1:19-op-45997	N.D. Ohio (Federal)
PA	Borough of Wyoming	1:20-op-45087	N.D. Ohio (Federal)
PA	City of Aliquippa	1:18-op-45939	N.D. Ohio (Federal)
PA	City of Allentown	1:19-op-45824	N.D. Ohio (Federal)
PA	City of Coatesville	1:19-op-45396	N.D. Ohio (Federal)
PA	City of Hazelton	1:19-op-45724	N.D. Ohio (Federal)
PA	City of Lock Haven	2017-007778 / 2017-008095 (coordinated)	MDL - Pennsylvania Opioid Litigation (PA - Court of Common Pleas of Delaware County) (State MDL)
PA	City of Nanticoke	1:19-op-45081	N.D. Ohio (Federal)
PA	City of New Castle	1:18-op-45939	N.D. Ohio (Federal)
PA	City of Philadelphia	2021-007975 / 18002718 / 2017-008095 (coordinated)	MDL - Pennsylvania Opioid Litigation (PA - Court of Common Pleas of Delaware County) (State MDL)
PA	City of Wilkes-Barre	1:18-op-45545	N.D. Ohio (Federal)
PA	County of Adams	1:20-op-45140	N.D. Ohio (Federal)
PA	County of Armstrong	2017-1570-GV / 2017-008095 (coordinated)	MDL - Pennsylvania Opioid Litigation (PA - Court of Common Pleas of Delaware County) (State MDL)
PA	County of Beaver	11326-2017 / 2017-008095 (coordinated)	MDL - Pennsylvania Opioid Litigation (PA - Court of Common Pleas of Delaware County) (State MDL)
PA	County of Bedford	1:20-op-45184	N.D. Ohio (Federal)
PA	County of Bradford	2018 CV 0059 / 2017-008095 (coordinated)	MDL - Pennsylvania Opioid Litigation (PA - Court of Common Pleas of Delaware County) (State MDL)
PA	County of Bucks	2018-03144 / 2017-008095 (coordinated)	MDL - Pennsylvania Opioid Litigation (PA - Court of Common Pleas of Delaware County) (State MDL)
PA	County of Cambria	2017-4131 / 2017-008095 (coordinated)	MDL - Pennsylvania Opioid Litigation (PA - Court of Common Pleas of Delaware County) (State MDL)
PA	County of Carbon	2018-000990 / 2017-008095 (coordinated)	MDL - Pennsylvania Opioid Litigation (PA - Court of Common Pleas of Delaware County) (State MDL)
PA	County of Chester	1:19-op-45233	N.D. Ohio (Federal)
PA	County of Clarion	285 CD 2018 / 2017-008095 (coordinated)	MDL - Pennsylvania Opioid Litigation (PA - Court of Common Pleas of Delaware County) (State MDL)
PA	County of Clinton	752-18 / 2017-008095 (coordinated)	MDL - Pennsylvania Opioid Litigation (PA - Court of Common Pleas of Delaware County) (State MDL)
PA	County of Columbia	1:17-op-45068	N.D. Ohio (Federal)
PA	County of Cumberland	2018-02147 / 2017-008095 (coordinated)	MDL - Pennsylvania Opioid Litigation (PA - Court of Common Pleas of Delaware County) (State MDL)

State	Subdivision/Special District	Case No.	Jurisdiction
PA	County of Fayette	2017-2676 / 2017-008095 (coordinated)	MDL - Pennsylvania Opioid Litigation (PA - Court of Common Pleas of Delaware County) (State MDL)
PA	County of Franklin	2019-02445 / 2017-008095 (coordinated)	MDL - Pennsylvania Opioid Litigation (PA - Court of Common Pleas of Delaware County) (State MDL)
PA	County of Greene	791-2017 / 2017-008095 (coordinated)	MDL - Pennsylvania Opioid Litigation (PA - Court of Common Pleas of Delaware County) (State MDL)
PA	County of Huntingdon	2018-0784 / 2017-008095 (coordinated)	MDL - Pennsylvania Opioid Litigation (PA - Court of Common Pleas of Delaware County) (State MDL)
PA	County of Indiana	1:18-op-45249	N.D. Ohio (Federal)
PA	County of Lackawanna	2017 CV 5156 / 2017-008095 (coordinated)	MDL - Pennsylvania Opioid Litigation (PA - Court of Common Pleas of Delaware County) (State MDL)
PA	County of Lawrence	11180-17 / 2017-008095 (coordinated)	MDL - Pennsylvania Opioid Litigation (PA - Court of Common Pleas of Delaware County) (State MDL)
PA	County of Lehigh	2018-C-716 / 2017-008095 (coordinated)	MDL - Pennsylvania Opioid Litigation (PA - Court of Common Pleas of Delaware County) (State MDL)
PA	County of Luzerne	1:17-op-45100	N.D. Ohio (Federal)
PA	County of Lycoming	1:19-op-45655	N.D. Ohio (Federal)
PA	County of Mercer	2018-1596 / 2017-008095 (coordinated)	MDL - Pennsylvania Opioid Litigation (PA - Court of Common Pleas of Delaware County) (State MDL)
PA	County of Monroe	3972CV18 / 2017-008095 (coordinated)	MDL - Pennsylvania Opioid Litigation (PA - Court of Common Pleas of Delaware County) (State MDL)
PA	County of Northampton	C48-CV-2017-11557 / 2017-008095 (coordinated)	MDL - Pennsylvania Opioid Litigation (PA - Court of Common Pleas of Delaware County) (State MDL)
PA	County of Northumberland	1:19-op-45555	N.D. Ohio (Federal)
PA	County of Washington	2017-6268 / 2017-008095 (coordinated)	MDL - Pennsylvania Opioid Litigation (PA - Court of Common Pleas of Delaware County) (State MDL)
PA	County of Westmoreland	5975-2017 / 2017-008095 (coordinated)	MDL - Pennsylvania Opioid Litigation (PA - Court of Common Pleas of Delaware County) (State MDL)
PA	County of Wyoming	1:18-op-45488	N.D. Ohio (Federal)
PA	County of York	2017-SU-003372 / 2017-008095 (coordinated)	MDL - Pennsylvania Opioid Litigation (PA - Court of Common Pleas of Delaware County) (State MDL)
PA	Delaware County	2017-008095 (coordinated)	MDL - Pennsylvania Opioid Litigation (PA - Court of Common Pleas of Delaware County) (State MDL)
PA	District Attorney of Allegheny County (District Attorney Stephen A. Zappala, Jr.)	21-947 / 2017-008095 (coordinated)	MDL - Pennsylvania Opioid Litigation (PA - Court of Common Pleas of Delaware County) (State MDL)
PA	District Attorney of Berks County (District Attorney John T. Adams)	19-18232 / 2017-008095 (coordinated)	PA - Court of Common Pleas of Berks County (State)

State	Subdivision/Special District	Case No.	Jurisdiction
PA	District Attorney of Bucks County (District Attorney Matthew D. Weintraub)	2020-00639 / 2017-008095 (coordinated)	MDL - Pennsylvania Opioid Litigation (PA - Court of Common Pleas of Delaware County) (State MDL)
PA	District Attorney of Chester County (District Attorney Deborah S. Ryan)	2020-04553 / 2017-008095 (coordinated)	MDL - Pennsylvania Opioid Litigation (PA - Court of Common Pleas of Delaware County) (State MDL)
PA	District Attorney of Clearfield County	1:21-op-45022	N.D. Ohio (Federal)
PA	District Attorney of Dauphin County (District Attorney Francis T. Chardo)	2019-CV-7795 / 2017-008095 (coordinated)	PA - Court of Common Pleas of Dauphin County (State)
PA	District Attorney of Delaware County (District Attorney Jack Stollsteimer)	CV-2020-002026 / 2017-008095 (coordinated)	MDL - Pennsylvania Opioid Litigation (PA - Court of Common Pleas of Delaware County) (State MDL)
PA	District Attorney of Northampton County (District Attorney Terence P. Houck)	C-48-CV-2020-3440 / 2017-008095 (coordinated)	PA - Court of Common Pleas of Northampton County (State)
PA	District Attorney of Philadelphia (District Attorney Lawrence S. Krasner)	18005594 / 2017-008095 (coordinated)	MDL - Pennsylvania Opioid Litigation (PA - Court of Common Pleas of Delaware County) (State MDL)
PA	District Attorney of Westmoreland County (District Attorney John W. Peck)	20CI02561 / 2017-008095 (coordinated)	MDL - Pennsylvania Opioid Litigation (PA - Court of Common Pleas of Delaware County) (State MDL)
PA	Municipality of Norristown	2019-12178 / 2017-008095 (coordinated)	PA - Court of Common Pleas of Montgomery County (State)
PA	Southeastern Pennsylvania Transportation Authority	180302923	MDL - Pennsylvania Opioid Litigation (PA - Court of Common Pleas of Delaware County) (State MDL)
PA	Township of Bensalem	2018-03119 / 2017-008095 (coordinated)	MDL - Pennsylvania Opioid Litigation (PA - Court of Common Pleas of Delaware County) (State MDL)
PA	Township of Bristol	1:19-op-45434	N.D. Ohio (Federal)
PA	Township of Fairview	1:19-op-45355	N.D. Ohio (Federal)
PA	Township of Hanover	1:19-op-45654	N.D. Ohio (Federal)
PA	Township of Lower Makefield	1:20-op-45284	N.D. Ohio (Federal)
PA	Township of Lower Southampton	1:20-op-45181	N.D. Ohio (Federal)
PA	Township of Mahoning	180603466 / 2017-008095 (coordinated)	MDL - Pennsylvania Opioid Litigation (PA - Court of Common Pleas of Delaware County) (State MDL)
PA	Township of Middletown	1:21-op-45030	N.D. Ohio (Federal)
PA	Township of Newtown	2019-03043-0 / 2017-008095 (coordinated)	MDL - Pennsylvania Opioid Litigation (PA - Court of Common Pleas of Delaware County) (State MDL)
PA	Township of Plains	1:18-op-46215	N.D. Ohio (Federal)
PA	Township of Union	1:18-op-45939	N.D. Ohio (Federal)
PA	Township of Warminster	2019-01469-0 / 2017-008095 (coordinated)	MDL - Pennsylvania Opioid Litigation (PA - Court of Common Pleas of Delaware County) (State MDL)
PA	Township of Warrington	CV-2019-007269 / 2017-008095 (coordinated)	MDL - Pennsylvania Opioid Litigation (PA - Court of Common Pleas of Delaware County) (State MDL)
PA	Township of West Norriton	2019-12178 / 2017-008095 (coordinated)	PA - Court of Common Pleas of Montgomery County (State)
PA	Township of Wilkes-Barre	1:19-op-45325	N.D. Ohio (Federal)

State	Subdivision/Special District	Case No.	Jurisdiction
PA	Township of Wright	1:19-op-45574	N.D. Ohio (Federal)
PR	Municipality of Adjuntas	1:20-op-45245	N.D. Ohio (Federal)
PR	Municipality of Aguada	3:22-cv-01532	D. Puerto Rico (Federal)
PR	Municipality of Aguadilla	3:22-cv-01533	D. Puerto Rico (Federal)
PR	Municipality of Aibonito	3:22-cv-01555	D. Puerto Rico (Federal)
PR	Municipality of Anasco	3:22-cv-01556	D. Puerto Rico (Federal)
PR	Municipality of Arecibo	3:22-cv-01557	D. Puerto Rico (Federal)
PR	Municipality of Arroyo	1:19-op-45817	N.D. Ohio (Federal)
PR	Municipality of Barceloneta	1:20-op-45267	N.D. Ohio (Federal)
PR	Municipality of Barranquitas	3:22-cv-01558	D. Puerto Rico (Federal)
PR	Municipality of Bayamon	1:19-op-45818	N.D. Ohio (Federal)
PR	Municipality of Cabo Rojo	3:22-cv-01560	D. Puerto Rico (Federal)
PR	Municipality of Caguas	1:19-op-45814	N.D. Ohio (Federal)
PR	Municipality of Camuy	3:22-cv-01561	D. Puerto Rico (Federal)
PR	Municipality of Canovanas	1:18-op-46018	N.D. Ohio (Federal)
PR	Municipality of Catano	1:19-op-45816	N.D. Ohio (Federal)
PR	Municipality of Cayey	1:18-op-45197	N.D. Ohio (Federal)
PR	Municipality of Ceiba	1:19-op-45819	N.D. Ohio (Federal)
PR	Municipality of Cidra	1:20-op-45244	N.D. Ohio (Federal)
PR	Municipality of Coamo	1:19-op-45820	N.D. Ohio (Federal)
PR	Municipality of Comerío	3:22-cv-01564	D. Puerto Rico (Federal)
PR	Municipality of Dorado	3:22-cv-01565	D. Puerto Rico (Federal)
PR	Municipality of Fajardo	3:22-cv-01566	D. Puerto Rico (Federal)
PR	Municipality of Guánica	3:22-cv-01567	D. Puerto Rico (Federal)
PR	Municipality of Guayanilla	1:18-op-45176	N.D. Ohio (Federal)
PR	Municipality of Hatillo	3:22-cv-01569	D. Puerto Rico (Federal)
PR	Municipality of Hormigueros	3:22-cv-01570	D. Puerto Rico (Federal)
PR	Municipality of Isabela	3:22-cv-01571	D. Puerto Rico (Federal)
PR	Municipality of Isla de Vieques	1:19-op-45752	N.D. Ohio (Federal)
PR	Municipality of Jayuya	3:22-cv-01572	D. Puerto Rico (Federal)
PR	Municipality of Juana Díaz	3:22-cv-01573	D. Puerto Rico (Federal)
PR	Municipality of Juncos	1:18-op-45994	N.D. Ohio (Federal)
PR	Municipality of Lares	3:22-cv-01574	D. Puerto Rico (Federal)
PR	Municipality of Las Marías	3:22-cv-01575	D. Puerto Rico (Federal)
PR	Municipality of Loiza	1:18-op-45177	N.D. Ohio (Federal)
PR	Municipality of Manatí	3:22-cv-01576	D. Puerto Rico (Federal)
PR	Municipality of Maricao	3:22-cv-01577	D. Puerto Rico (Federal)
PR	Municipality of Moca	3:22-cv-01578	D. Puerto Rico (Federal)
PR	Municipality of Morovis	3:22-cv-01579	D. Puerto Rico (Federal)
PR	Municipality of Orocovis	3:22-cv-01580	D. Puerto Rico (Federal)
PR	Municipality of Penuelas	3:22-cv-01581	D. Puerto Rico (Federal)
PR	Municipality of Ponce	3:22-cv-01582	D. Puerto Rico (Federal)
PR	Municipality of Quebradillas	3:22-cv-01583	D. Puerto Rico (Federal)
PR	Municipality of Rincón	3:22-cv-01584	D. Puerto Rico (Federal)
PR	Municipality of Rio Grande	1:18-op-45895	N.D. Ohio (Federal)
PR	Municipality of Sabana Grande	1:18-op-45197	N.D. Ohio (Federal)
PR	Municipality of Salinas	3:22-cv-01585	D. Puerto Rico (Federal)

State	Subdivision/Special District	Case No.	Jurisdiction
PR	Municipality of San Germán	3:22-cv-01586	D. Puerto Rico (Federal)
PR	Municipality of San Juan	1:21-op-45082	N.D. Ohio (Federal)
PR	Municipality of San Lorenzo	3:22-cv-01587	D. Puerto Rico (Federal)
PR	Municipality of Santa Isabel	3:22-cv-01588	D. Puerto Rico (Federal)
PR	Municipality of Toa Alta	3:22-cv-01589	D. Puerto Rico (Federal)
PR	Municipality of Trujillo Alto	3:22-cv-01590	D. Puerto Rico (Federal)
PR	Municipality of Vega Alta	1:18-op-46011	N.D. Ohio (Federal)
PR	Municipality of Vega Baja	3:22-cv-01591	D. Puerto Rico (Federal)
PR	Municipality of Villalba	1:19-op-45815	N.D. Ohio (Federal)
PR	Municipality of Yabucoa	1:18-op-45731	N.D. Ohio (Federal)
SC	City of Charleston	2019-CP-104294 / 2018-CP-2301294 (master)	MDL - In re South Carolina Opioid Litigation (SC - 13th Judicial Circuit, County of Greenville) (State MDL)
SC	City of Chester	1:19-op-45606	N.D. Ohio (Federal)
SC	City of Columbia	1:19-op-45979	N.D. Ohio (Federal)
SC	City of Georgetown	1:19-op-45613	N.D. Ohio (Federal)
SC	City of Myrtle Beach	2019-CP-2605556 / 2018-CP-2301294 (master)	MDL - In re South Carolina Opioid Litigation (SC - 13th Judicial Circuit, County of Greenville) (State MDL)
SC	City of North Charleston	2019-CP-103978 / 2018-CP-2301294 (master)	MDL - In re South Carolina Opioid Litigation (SC - 13th Judicial Circuit, County of Greenville) (State MDL)
SC	City of Orangeburg	1:19-op-45607	N.D. Ohio (Federal)
SC	County of Abbeville	2019-CP-0100154 / 2018-CP-2301294 (master)	MDL - In re South Carolina Opioid Litigation (SC - 13th Judicial Circuit, County of Greenville) (State MDL)
SC	County of Aiken	2019-CP-0201086 / 2018-CP-2301294 (master)	MDL - In re South Carolina Opioid Litigation (SC - 13th Judicial Circuit, County of Greenville) (State MDL)
SC	County of Allendale	2018-CP-0300125 / 2018-CP-2301294 (master)	MDL - In re South Carolina Opioid Litigation (SC - 13th Judicial Circuit, County of Greenville) (State MDL)
SC	County of Anderson	2018-CP-0401108 / 2018-CP-2301294 (master)	MDL - In re South Carolina Opioid Litigation (SC - 13th Judicial Circuit, County of Greenville) (State MDL)
SC	County of Bamberg	2018-CP-0500189 / 2018-CP-2301294 (master)	MDL - In re South Carolina Opioid Litigation (SC - 13th Judicial Circuit, County of Greenville) (State MDL)
SC	County of Barnwell	2018-CP-0600329 / 2018-CP-2301294 (master)	MDL - In re South Carolina Opioid Litigation (SC - 13th Judicial Circuit, County of Greenville) (State MDL)
SC	County of Beaufort	2018-CP-0701245 / 2018-CP-2301294 (master)	MDL - In re South Carolina Opioid Litigation (SC - 13th Judicial Circuit, County of Greenville) (State MDL)
SC	County of Berkeley	1:19-op-45436	N.D. Ohio (Federal)
SC	County of Calhoun	2019-CP-0900065 / 2018-CP-2301294 (master)	MDL - In re South Carolina Opioid Litigation (SC - 13th Judicial Circuit, County of Greenville) (State MDL)
SC	County of Charleston	1:19-op-45803	N.D. Ohio (Federal)
SC	County of Cherokee	2018-CP-1100503 / 2018-CP-2301294 (master)	MDL - In re South Carolina Opioid Litigation (SC - 13th Judicial Circuit, County of Greenville) (State MDL)

State	Subdivision/Special District	Case No.	Jurisdiction
SC	County of Chester	2020-CP-1200373 / 2018-CP-2301294 (master)	MDL - In re South Carolina Opioid Litigation (SC - 13th Judicial Circuit, County of Greenville) (State MDL)
SC	County of Chesterfield	2018-CP-1300410 / 2018-CP-2301294 (master)	MDL - In re South Carolina Opioid Litigation (SC - 13th Judicial Circuit, County of Greenville) (State MDL)
SC	County of Clarendon	2019-CP-1400236 / 2018-CP-2301294 (master)	MDL - In re South Carolina Opioid Litigation (SC - 13th Judicial Circuit, County of Greenville) (State MDL)
SC	County of Colleton	2018-CP-1500438 / 2018-CP-2301294 (master)	MDL - In re South Carolina Opioid Litigation (SC - 13th Judicial Circuit, County of Greenville) (State MDL)
SC	County of Dillon	2019-CP-1700213 / 2018-CP-2301294 (master)	MDL - In re South Carolina Opioid Litigation (SC - 13th Judicial Circuit, County of Greenville) (State MDL)
SC	County of Dorchester	2018-CP-1801122 / 2018-CP-2301294 (master)	MDL - In re South Carolina Opioid Litigation (SC - 13th Judicial Circuit, County of Greenville) (State MDL)
SC	County of Edgefield	2019-CP-1900120 / 2018-CP-2301294 (master)	MDL - In re South Carolina Opioid Litigation (SC - 13th Judicial Circuit, County of Greenville) (State MDL)
SC	County of Fairfield	2018-CP-2000272 / 2018-CP-2301294 (master)	MDL - In re South Carolina Opioid Litigation (SC - 13th Judicial Circuit, County of Greenville) (State MDL)
SC	County of Florence	2019-CP-2101213 / 2018-CP-2301294 (master)	MDL - In re South Carolina Opioid Litigation (SC - 13th Judicial Circuit, County of Greenville) (State MDL)
SC	County of Georgetown	1:19-op-45612	N.D. Ohio (Federal)
SC	County of Greenville	2018-CP-2301294 (master)	MDL - In re South Carolina Opioid Litigation (SC - 13th Judicial Circuit, County of Greenville) (State MDL)
SC	County of Greenwood	2018-CP-2400775 / 2018-CP-2301294 (master)	MDL - In re South Carolina Opioid Litigation (SC - 13th Judicial Circuit, County of Greenville) (State MDL)
SC	County of Hampton	2018-CP-2500258 / 2018-CP-2301294 (master)	MDL - In re South Carolina Opioid Litigation (SC - 13th Judicial Circuit, County of Greenville) (State MDL)
SC	County of Horry	2019-CP-2602684 / 2018-CP-2301294 (master)	MDL - In re South Carolina Opioid Litigation (SC - 13th Judicial Circuit, County of Greenville) (State MDL)
SC	County of Jasper	2018-CP-2700332 / 2018-CP-2301294 (master)	MDL - In re South Carolina Opioid Litigation (SC - 13th Judicial Circuit, County of Greenville) (State MDL)
SC	County of Kershaw	2018-CP-2800553 / 2018-CP-2301294 (master)	MDL - In re South Carolina Opioid Litigation (SC - 13th Judicial Circuit, County of Greenville) (State MDL)
SC	County of Lancaster	2019-CP-2900540 / 2018-CP-2301294 (master)	MDL - In re South Carolina Opioid Litigation (SC - 13th Judicial Circuit, County of Greenville) (State MDL)
SC	County of Laurens	2018-CP-3000606 / 2018-CP-2301294 (master)	MDL - In re South Carolina Opioid Litigation (SC - 13th Judicial Circuit, County of Greenville) (State MDL)
SC	County of Lee	2018-CP-3100207 / 2018-CP-2301294	MDL - In re South Carolina Opioid Litigation (SC - 13th Judicial Circuit, County of

State	Subdivision/Special District	Case No.	Jurisdiction
		(master)	Greenville) (State MDL)
SC	County of Lexington	2018-CP-3202207 / 2018-CP-2301294 (master)	MDL - In re South Carolina Opioid Litigation (SC - 13th Judicial Circuit, County of Greenville) (State MDL)
SC	County of Marion	2019-CP-3300299 / 2018-CP-2301294 (master)	MDL - In re South Carolina Opioid Litigation (SC - 13th Judicial Circuit, County of Greenville) (State MDL)
SC	County of Marlboro	2020-CP-3400184 / 2018-CP-2301294 (master)	MDL - In re South Carolina Opioid Litigation (SC - 13th Judicial Circuit, County of Greenville) (State MDL)
SC	County of McCormick	2019-CP-3500031 / 2018-CP-2301294 (master)	MDL - In re South Carolina Opioid Litigation (SC - 13th Judicial Circuit, County of Greenville) (State MDL)
SC	County of Newberry	2019-CP-3600636 / 2018-CP-2301294 (master)	MDL - In re South Carolina Opioid Litigation (SC - 13th Judicial Circuit, County of Greenville) (State MDL)
SC	County of Oconee	2018-CP-3700458 / 2018-CP-2301294 (master)	MDL - In re South Carolina Opioid Litigation (SC - 13th Judicial Circuit, County of Greenville) (State MDL)
SC	County of Orangeburg	2018-CP-3800841 / 2018-CP-2301294 (master)	MDL - In re South Carolina Opioid Litigation (SC - 13th Judicial Circuit, County of Greenville) (State MDL)
SC	County of Pickens	2018-CP-3900675 / 2018-CP-2301294 (master)	MDL - In re South Carolina Opioid Litigation (SC - 13th Judicial Circuit, County of Greenville) (State MDL)
SC	County of Richland	1:19-op-45327	N.D. Ohio (Federal)
SC	County of Saluda	2019-CP-4100111 / 2018-CP-2301294 (master)	MDL - In re South Carolina Opioid Litigation (SC - 13th Judicial Circuit, County of Greenville) (State MDL)
SC	County of Spartanburg	2018-CP-4200760 / 2018-CP-2301294 (master)	MDL - In re South Carolina Opioid Litigation (SC - 13th Judicial Circuit, County of Greenville) (State MDL)
SC	County of Sumter	2019-CP-4300891 / 2018-CP-2301294 (master)	MDL - In re South Carolina Opioid Litigation (SC - 13th Judicial Circuit, County of Greenville) (State MDL)
SC	County of Union	2018-CP-4400288 / 2018-CP-2301294 (master)	MDL - In re South Carolina Opioid Litigation (SC - 13th Judicial Circuit, County of Greenville) (State MDL)
SC	County of Williamsburg	2018-CP-4500276 / 2018-CP-2301294 (master)	MDL - In re South Carolina Opioid Litigation (SC - 13th Judicial Circuit, County of Greenville) (State MDL)
SC	County of York	2018-CP-4602446 / 2018-CP-2301294 (master)	MDL - In re South Carolina Opioid Litigation (SC - 13th Judicial Circuit, County of Greenville) (State MDL)
SC	Medical University Hospital Authority	1:20-op-45197	N.D. Ohio (Federal)
SC	Medical University of South Carolina	1:20-op-45197	N.D. Ohio (Federal)
SC	Town of Mount Pleasant	2019-CP-104302 / 2018-CP-2301294 (master)	MDL - In re South Carolina Opioid Litigation (SC - 13th Judicial Circuit, County of Greenville) (State MDL)
SC	Town of Summerville	2019-CP-1801602 / 2018-CP-2301294 (master)	MDL - In re South Carolina Opioid Litigation (SC - 13th Judicial Circuit, County of Greenville) (State MDL)

State	Subdivision/Special District	Case No.	Jurisdiction
SC	University Medical Associates of the Medical University of South Carolina	1:20-op-45197	N.D. Ohio (Federal)
TN	City of Clarksville	1:18-op-45517	N.D. Ohio (Federal)
TN	City of Gatlinburg	1:21-op-45071	N.D. Ohio (Federal)
TN	City of Germantown	1:20-op-45199	N.D. Ohio (Federal)
TN	City of Lexington	1:18-op-45458	N.D. Ohio (Federal)
TN	City of Maryville	1:20-op-45199	N.D. Ohio (Federal)
TN	City of Memphis	1:19-op-45220	N.D. Ohio (Federal)
TN	City of Millington	1:19-op-45474	N.D. Ohio (Federal)
TN	City of Pigeon Forge	1:20-op-45199	N.D. Ohio (Federal)
TN	City of Ripley	1:20-op-45199	N.D. Ohio (Federal)
TN	County of Blount	1:19-op-45132	N.D. Ohio (Federal)
TN	County of Campbell	1:18-op-45133	N.D. Ohio (Federal)
TN	County of Cannon	1:18-op-45924	N.D. Ohio (Federal)
TN	County of Claiborne	1:19-op-45658	N.D. Ohio (Federal)
TN	County of Crockett	1:18-op-45215	N.D. Ohio (Federal)
TN	County of Decatur	1:19-op-45789	N.D. Ohio (Federal)
TN	County of Fentress	1:18-op-45419	N.D. Ohio (Federal)
TN	County of Greene	1:18-op-45136	N.D. Ohio (Federal)
TN	County of Hamilton	1:18-op-45507	N.D. Ohio (Federal)
TN	County of Hancock	1:18-op-45153	N.D. Ohio (Federal)
TN	County of Hawkins	1:18-op-45299	N.D. Ohio (Federal)
TN	County of Haywood	1:18-op-45107	N.D. Ohio (Federal)
TN	County of Henderson	1:18-op-45404	N.D. Ohio (Federal)
TN	County of Jefferson	1:19-op-45132	N.D. Ohio (Federal)
TN	County of Johnson	1:18-op-45164	N.D. Ohio (Federal)
TN	County of Lauderdale	1:18-op-46324	N.D. Ohio (Federal)
TN	County of Madison	1:18-op-45403	N.D. Ohio (Federal)
TN	County of Montgomery	1:18-op-45418	N.D. Ohio (Federal)
TN	County of Morgan	1:19-op-45075	N.D. Ohio (Federal)
TN	County of Obion	1:19-op-46115	N.D. Ohio (Federal)
TN	County of Overton	1:18-op-45568	N.D. Ohio (Federal)
TN	County of Pickett	1:18-op-45242	N.D. Ohio (Federal)
TN	County of Rutherford	1:18-op-45258	N.D. Ohio (Federal)
TN	County of Scott	1:18-op-45273	N.D. Ohio (Federal)
TN	County of Shelby	CT-004500-17	TN - Circuit Court for Shelby County (State)
TN	County of Smith	1:18-op-45029	N.D. Ohio (Federal)
TN	County of Sumner	1:18-op-45255	N.D. Ohio (Federal)
TN	County of Washington	1:18-op-46317	N.D. Ohio (Federal)
TN	County of Williamson	1:18-op-45134	N.D. Ohio (Federal)
TN	Hamblen County Board of Education	1:22-op-45027	N.D. Ohio (Federal)
TN	Hancock County Board of Education	1:22-op-45027	N.D. Ohio (Federal)
TN	Metropolitan Government of Nashville and Davidson County	1:18-op-45088	N.D. Ohio (Federal)
TN	Town of Arlington	1:19-op-45471	N.D. Ohio (Federal)
TN	Town of Dandridge	1:20-op-45216	N.D. Ohio (Federal)
TN	Town of Decatur	1:20-op-45199	N.D. Ohio (Federal)

State	Subdivision/Special District	Case No.	Jurisdiction
TX	Bexar County Hospital District d/b/a University Health System	2020-17501 / 2018-63587 (master)	MDL - In re Texas Opioid Litigation (TX - 152nd Judicial District of Harris County) (State MDL)
TX	Burleson County Hospital District	29740	TX - 21st Judicial District Court of Burleson County (State)
TX	City of Eagle Pass	1:18-op-46033	N.D. Ohio (Federal)
TX	City of Houston	2019-43219 / 2018-63587 (master)	MDL - In re Texas Opioid Litigation (TX - 152nd Judicial District of Harris County) (State MDL)
TX	City of Laredo	1:18-op-46026	N.D. Ohio (Federal)
TX	City of Leon Valley	2020-39837 / 2018-63587 (master)	MDL - In re Texas Opioid Litigation (TX - 152nd Judicial District of Harris County) (State MDL)
TX	City of San Antonio	1:19-op-45833	N.D. Ohio (Federal)
TX	County of Angelina	1:20-op-45053	N.D. Ohio (Federal)
TX	County of Bailey	1:20-op-45264	N.D. Ohio (Federal)
TX	County of Bastrop	2020-17434 / 2018-63587 (master)	MDL - In re Texas Opioid Litigation (TX - 152nd Judicial District of Harris County) (State MDL)
TX	County of Bexar	2018-77066 / 2018-63587 (master)	MDL - In re Texas Opioid Litigation (TX - 152nd Judicial District of Harris County) (State MDL)
TX	County of Bowie	1:17-op-45159	N.D. Ohio (Federal)
TX	County of Brazos	1:18-op-45863	N.D. Ohio (Federal)
TX	County of Brooks	2020-17509 / 2018-63587 (master)	MDL - In re Texas Opioid Litigation (TX - 152nd Judicial District of Harris County) (State MDL)
TX	County of Caldwell	2020-17563 / 2018-63587 (master)	MDL - In re Texas Opioid Litigation (TX - 152nd Judicial District of Harris County) (State MDL)
TX	County of Calhoun	2020-17536 / 2018-63587 (master)	MDL - In re Texas Opioid Litigation (TX - 152nd Judicial District of Harris County) (State MDL)
TX	County of Cameron	2018-77093 / 2018-63587 (master)	MDL - In re Texas Opioid Litigation (TX - 152nd Judicial District of Harris County) (State MDL)
TX	County of Camp	1:18-op-45301	N.D. Ohio (Federal)
TX	County of Castro	2020-37584 / 2018-63587 (master)	MDL - In re Texas Opioid Litigation (TX - 152nd Judicial District of Harris County) (State MDL)
TX	County of Cherokee	1:17-op-45155	N.D. Ohio (Federal)
TX	County of Childress	1:18-op-45229	N.D. Ohio (Federal)
TX	County of Clay	1:18-op-45169	N.D. Ohio (Federal)
TX	County of Colorado	2020-37584 / 2018-63587 (master)	MDL - In re Texas Opioid Litigation (TX - 152nd Judicial District of Harris County) (State MDL)
TX	County of Coryell	1:22-op-45009	N.D. Ohio (Federal)
TX	County of Dallas	2018-77098 / 2018-63587 (master)	MDL - In re Texas Opioid Litigation (TX - 152nd Judicial District of Harris County) (State MDL)
TX	County of Delta	2018-77104 / 2018-63587 (master)	MDL - In re Texas Opioid Litigation (TX - 152nd Judicial District of Harris County) (State

State	Subdivision/Special District	Case No.	Jurisdiction
			MDL)
TX	County of Duval	2018-87879 / 2018-63587 (master)	MDL - In re Texas Opioid Litigation (TX - 152nd Judicial District of Harris County) (State MDL)
TX	County of El Paso	2018-76970 / 2018-63587 (master)	MDL - In re Texas Opioid Litigation (TX - 152nd Judicial District of Harris County) (State MDL)
TX	County of Ellis	2019-41572 / 2018-63587 (master)	MDL - In re Texas Opioid Litigation (TX - 152nd Judicial District of Harris County) (State MDL)
TX	County of Falls	2018-77106 / 2018-63587 (master)	MDL - In re Texas Opioid Litigation (TX - 152nd Judicial District of Harris County) (State MDL)
TX	County of Fort Bend	19-DCV-263509	TX - 400th Judicial District Court of Fort Bend County (State)
TX	County of Franklin	1:18-op-45302	N.D. Ohio (Federal)
TX	County of Freestone	1:19-op-45985	N.D. Ohio (Federal)
TX	County of Galveston	1:19-op-45239	N.D. Ohio (Federal)
TX	County of Guadalupe	2020-16457 / 2018-63587 (master)	MDL - In re Texas Opioid Litigation (TX - 152nd Judicial District of Harris County) (State MDL)
TX	County of Harris	2017-82618 / 2018-63587 (master)	TX - 133rd Judicial District Court of Harris County (State)
TX	County of Harrison	1:17-op-45087 / 2018-77108 / 2018-63587 (master)	N.D. Ohio (Federal) / MDL - In re Texas Opioid Litigation (TX - 152nd Judicial District of Harris County) (State MDL)
TX	County of Haskell	1:18-op-45223	N.D. Ohio (Federal)
TX	County of Hays	2020-16529 / 2018-63587 (master)	MDL - In re Texas Opioid Litigation (TX - 152nd Judicial District of Harris County) (State MDL)
TX	County of Henderson	1:19-op-45684	N.D. Ohio (Federal)
TX	County of Hidalgo	2018-77109 / 2018-63587 (master)	MDL - In re Texas Opioid Litigation (TX - 152nd Judicial District of Harris County) (State MDL)
TX	County of Hopkins	2018-77111 / 2018-63587 (master)	MDL - In re Texas Opioid Litigation (TX - 152nd Judicial District of Harris County) (State MDL)
TX	County of Jefferson	2020-37584 / 2018-63587 (master)	MDL - In re Texas Opioid Litigation (TX - 152nd Judicial District of Harris County) (State MDL)
TX	County of Jim Hogg	2019-49060 / 2018-63587 (master)	TX - 229th Judicial District Court of Jim Hogg County (State)
TX	County of Jim Wells	19-06-59579-CV / 2018-63587 (master)	TX - 79th Judicial District Court of Jim Wells County (State)
TX	County of Johnson	2018-87346 / 2018-63587 (master)	MDL - In re Texas Opioid Litigation (TX - 152nd Judicial District of Harris County) (State MDL)
TX	County of Jones	1:18-op-45139	N.D. Ohio (Federal)
TX	County of Kaufman	1:18-op-46081	N.D. Ohio (Federal)
TX	County of Kendall	1:22-op-45010	N.D. Ohio (Federal)

State	Subdivision/Special District	Case No.	Jurisdiction
TX	County of Kerr	2018-77114 / 2018-63587 (master)	MDL - In re Texas Opioid Litigation (TX - 152nd Judicial District of Harris County) (State MDL)
TX	County of Kinney	1:18-op-45241	N.D. Ohio (Federal)
TX	County of Kleberg	2019-49074 / 2018-63587 (master)	TX - 105th Judicial District Court of Kleberg County (State)
TX	County of La Salle	1:18-op-45234	N.D. Ohio (Federal)
TX	County of Lamar	1:17-op-45162	N.D. Ohio (Federal)
TX	County of Leon	1:19-op-45240	N.D. Ohio (Federal)
TX	County of Liberty	2018-77116 / 2018-63587 (master)	MDL - In re Texas Opioid Litigation (TX - 152nd Judicial District of Harris County) (State MDL)
TX	County of Lubbock	2020-16529 / 2018-63587 (master)	MDL - In re Texas Opioid Litigation (TX - 152nd Judicial District of Harris County) (State MDL)
TX	County of Madison	2020-37584 / 2018-63587 (master)	MDL - In re Texas Opioid Litigation (TX - 152nd Judicial District of Harris County) (State MDL)
TX	County of Maverick	2018-77026 / 1:19-op-45426 / 2018-63587 (master)	MDL - In re Texas Opioid Litigation (TX - 152nd Judicial District of Harris County) (State MDL) / N.D. Ohio (Federal)
TX	County of Mitchell	1:18-op-45063	N.D. Ohio (Federal)
TX	County of Montgomery	1:18-op-45030	N.D. Ohio (Federal)
TX	County of Morris	1:17-op-45086	N.D. Ohio (Federal)
TX	County of Nolan	1:18-op-45061	N.D. Ohio (Federal)
TX	County of Nueces	2018-77083 / 2018-63587 (master)	MDL - In re Texas Opioid Litigation (TX - 152nd Judicial District of Harris County) (State MDL)
TX	County of Polk	1:18-op-45077	N.D. Ohio (Federal)
TX	County of Red River	1:17-op-45160	N.D. Ohio (Federal)
TX	County of Roberts	2020-37584 / 2018-63587 (master)	MDL - In re Texas Opioid Litigation (TX - 152nd Judicial District of Harris County) (State MDL)
TX	County of Rockwall	1-19-0503 / 2018-63587 (master)	TX - 439th Judicial District Court of Rockwall County (State)
TX	County of Rusk	1:17-op-45154	N.D. Ohio (Federal)
TX	County of San Patricio	2018-77075 / 2018-63587 (master)	MDL - In re Texas Opioid Litigation (TX - 152nd Judicial District of Harris County) (State MDL)
TX	County of San Saba	2020-37584 / 2018-63587 (master)	MDL - In re Texas Opioid Litigation (TX - 152nd Judicial District of Harris County) (State MDL)
TX	County of Shackelford	2020-37584 / 2018-63587 (master)	MDL - In re Texas Opioid Litigation (TX - 152nd Judicial District of Harris County) (State MDL)
TX	County of Smith	2020-70878 / 2018-63587 (master)	MDL - In re Texas Opioid Litigation (TX - 152nd Judicial District of Harris County) (State MDL)
TX	County of Stephens	1:18-op-45804	N.D. Ohio (Federal)
TX	County of Tarrant	1:18-op-45274	N.D. Ohio (Federal)

State	Subdivision/Special District	Case No.	Jurisdiction
TX	County of Terrell	2020-37584 / 2018-63587 (master)	MDL - In re Texas Opioid Litigation (TX - 152nd Judicial District of Harris County) (State MDL)
TX	County of Throckmorton	1:18-op-45141	N.D. Ohio (Federal)
TX	County of Titus	1:17-op-45161	N.D. Ohio (Federal)
TX	County of Travis	2018-77144 / 2018-63587 (master)	MDL - In re Texas Opioid Litigation (TX - 152nd Judicial District of Harris County) (State MDL)
TX	County of Upshur	1:17-op-45085	N.D. Ohio (Federal)
TX	County of Uvalde	2020-16427 / 2018-63587 (master)	MDL - In re Texas Opioid Litigation (TX - 152nd Judicial District of Harris County) (State MDL)
TX	County of Van Zandt	2018-77150 / 2018-63587 (master)	MDL - In re Texas Opioid Litigation (TX - 152nd Judicial District of Harris County) (State MDL)
TX	County of Walker	2019-29777 / 2018-63587 (master)	TX - 12th Judicial District Court of Walker County (State)
TX	County of Waller	2018-77153 / 2018-63587 (master)	MDL - In re Texas Opioid Litigation (TX - 152nd Judicial District of Harris County) (State MDL)
TX	County of Webb	1:18-op-45175	N.D. Ohio (Federal)
TX	County of Wichita	1:18-op-45064	N.D. Ohio (Federal)
TX	County of Williamson	19-0850-C368 / 2018-63587 (master)	TX - 368th Judicial District Court of Williamson County (State)
TX	County of Wilson	2020-39831 / 2018-63587 (master)	MDL - In re Texas Opioid Litigation (TX - 152nd Judicial District of Harris County) (State MDL)
TX	County of Zavala	1:18-op-46036	N.D. Ohio (Federal)
TX	Dallas County Hospital District d/b/a Parkland Health and Hospital System	DC-19-18635 / 2018-63587 (master)	TX - 162nd Judicial District Court of Dallas County (State)
TX	Guadalupe Valley Hospital a/k/a Guadalupe Regional Medical Center	DC-19-18635 / 2018-63587 (master)	TX - 162nd Judicial District Court of Dallas County (State)
TX	Harris County Hospital District d/b/a Harris Health System	2021-23217 / 2018-63587 (master)	MDL - In re Texas Opioid Litigation (TX - 152nd Judicial District of Harris County) (State MDL)
TX	Irving Independent School District	2020-37584 / 2018-63587 (master) / 1:21-op-45080	MDL - In re Texas Opioid Litigation (TX - 152nd Judicial District of Harris County) (State MDL) / N.D. Ohio (Federal)
TX	Nueces County Hospital District	2018-77083 / 2018-63587 (master)	MDL - In re Texas Opioid Litigation (TX - 152nd Judicial District of Harris County) (State MDL)
TX	Ochiltree County Hospital District	1:18-op-45869	N.D. Ohio (Federal)
TX	Palo Pinto County Hospital District a/k/a Palo Pinto General Hospital	DC-19-18635 / 2018-63587 (master)	TX - 162nd Judicial District Court of Dallas County (State)
TX	Socorro Independent School District	202070878 / 2018-63587 (master) / 1:21-op-45080	MDL - In re Texas Opioid Litigation (TX - 152nd Judicial District of Harris County) (State MDL) / N.D. Ohio (Federal)
TX	Tarrant County Hospital District d/b/a JPS Health Network	1:21-op-45077	N.D. Ohio (Federal)

State	Subdivision/Special District	Case No.	Jurisdiction
TX	Texarkana Independent School District	2020-37584 / 2018-63587 (master) / 1:21-op-45080	MDL - In re Texas Opioid Litigation (TX - 152nd Judicial District of Harris County) (State MDL) / N.D. Ohio (Federal)
TX	Wilson County Memorial Hospital District	2020-39831 / 2018-63587 (master)	MDL - In re Texas Opioid Litigation (TX - 152nd Judicial District of Harris County) (State MDL)
UT	County of Beaver	190500179 / 180500119 (coordinated)	MDL - In the Matter of the Utah Opioid Litigation I (UT - Summit County, Silver Summit Division) (State MDL)
UT	County of Cache	190500360 / 180500119 (coordinated)	MDL - In the Matter of the Utah Opioid Litigation I (UT - Summit County, Silver Summit Division) (State MDL)
UT	County of Carbon	1:18-op-46270	N.D. Ohio (Federal)
UT	County of Daggett	190500359 / 180500119 (coordinated)	MDL - In the Matter of the Utah Opioid Litigation I (UT - Summit County, Silver Summit Division) (State MDL)
UT	County of Davis	180700870 / 180500119 (coordinated)	MDL - In the Matter of the Utah Opioid Litigation I (UT - Summit County, Silver Summit Division) (State MDL)
UT	County of Duchesne	190500359 / 180500119 (coordinated)	MDL - In the Matter of the Utah Opioid Litigation I (UT - Summit County, Silver Summit Division) (State MDL)
UT	County of Emery	190500430 / 180500119 (coordinated)	MDL - In the Matter of the Utah Opioid Litigation I (UT - Summit County, Silver Summit Division) (State MDL)
UT	County of Garfield	190500361 / 180500119 (coordinated)	MDL - In the Matter of the Utah Opioid Litigation I (UT - Summit County, Silver Summit Division) (State MDL)
UT	County of Grand	180700040 / 180500119 (coordinated)	MDL - In the Matter of the Utah Opioid Litigation I (UT - Summit County, Silver Summit Division) (State MDL)
UT	County of Iron	180500149 / 180500119 (coordinated)	MDL - In the Matter of the Utah Opioid Litigation I (UT - Summit County, Silver Summit Division) (State MDL)
UT	County of Juab	190500430 / 180500119 (coordinated)	MDL - In the Matter of the Utah Opioid Litigation I (UT - Summit County, Silver Summit Division) (State MDL)
UT	County of Kane	190500361 / 180500119 (coordinated)	MDL - In the Matter of the Utah Opioid Litigation I (UT - Summit County, Silver Summit Division) (State MDL)
UT	County of Millard	180700044 / 180500119 (coordinated)	MDL - In the Matter of the Utah Opioid Litigation I (UT - Summit County, Silver Summit Division) (State MDL)
UT	County of Piute	190500430 / 180500119 (coordinated)	MDL - In the Matter of the Utah Opioid Litigation I (UT - Summit County, Silver Summit Division) (State MDL)
UT	County of Rich	190500360 / 180500119 (coordinated)	MDL - In the Matter of the Utah Opioid Litigation I (UT - Summit County, Silver Summit Division) (State MDL)
UT	County of Salt Lake	180902421 / 180500119 (coordinated)	MDL - In the Matter of the Utah Opioid Litigation I (UT - Summit County, Silver Summit Division) (State MDL)

State	Subdivision/Special District	Case No.	Jurisdiction
UT	County of San Juan	180700011 / 180500119 (coordinated)	MDL - In the Matter of the Utah Opioid Litigation I (UT - Summit County, Silver Summit Division) (State MDL)
UT	County of Sanpete	180600095 / 180500119 (coordinated)	MDL - In the Matter of the Utah Opioid Litigation I (UT - Summit County, Silver Summit Division) (State MDL)
UT	County of Sevier	190500430 / 180500119 (coordinated)	MDL - In the Matter of the Utah Opioid Litigation I (UT - Summit County, Silver Summit Division) (State MDL)
UT	County of Summit	190500354 / 180500119 (coordinated)	MDL - In the Matter of the Utah Opioid Litigation I (UT - Summit County, Silver Summit Division) (State MDL)
UT	County of Tooele	190500355 / 180500119 (coordinated)	MDL - In the Matter of the Utah Opioid Litigation I (UT - Summit County, Silver Summit Division) (State MDL)
UT	County of Uintah	190500359 / 180500119 (coordinated)	MDL - In the Matter of the Utah Opioid Litigation I (UT - Summit County, Silver Summit Division) (State MDL)
UT	County of Utah	1:18-op-46184	N.D. Ohio (Federal)
UT	County of Wasatch	190500357 / 180500119 (coordinated)	MDL - In the Matter of the Utah Opioid Litigation I (UT - Summit County, Silver Summit Division) (State MDL)
UT	County of Washington	190500361 / 180500119 (coordinated)	MDL - In the Matter of the Utah Opioid Litigation I (UT - Summit County, Silver Summit Division) (State MDL)
UT	County of Wayne	190500430 / 180500119 (coordinated)	MDL - In the Matter of the Utah Opioid Litigation I (UT - Summit County, Silver Summit Division) (State MDL)
UT	County of Weber	190500358 / 180500119 (coordinated)	MDL - In the Matter of the Utah Opioid Litigation I (UT - Summit County, Silver Summit Division) (State MDL)
VA	City of Alexandria	1:19-op-45246	N.D. Ohio (Federal)
VA	City of Bristol	1:19-op-45719	N.D. Ohio (Federal)
VA	City of Buena Vista	1:20-op-45159	N.D. Ohio (Federal)
VA	City of Chesapeake	1:19-op-45712	N.D. Ohio (Federal)
VA	City of Covington	1:19-op-45799	N.D. Ohio (Federal)
VA	City of Danville	1:19-op-45730	N.D. Ohio (Federal)
VA	City of Emporia	1:19-op-46850	N.D. Ohio (Federal)
VA	City of Fairfax	1:20-op-45177	N.D. Ohio (Federal)
VA	City of Fredericksburg	1:19-op-45898	N.D. Ohio (Federal)
VA	City of Galax	1:19-op-45243	N.D. Ohio (Federal)
VA	City of Hopewell	1:19-op-45433	N.D. Ohio (Federal)
VA	City of Lexington	1:19-op-45693	N.D. Ohio (Federal)
VA	City of Martinsville	CL18000240	VA - Circuit Court for the City of Martinsville (State)
VA	City of Norfolk	1:19-op-45926	N.D. Ohio (Federal)
VA	City of Norton	1:19-op-45249	N.D. Ohio (Federal)
VA	City of Portsmouth	1:19-op-45856	N.D. Ohio (Federal)
VA	City of Radford	1:19-op-46154	N.D. Ohio (Federal)
VA	City of Richmond	1:19-op-45546	N.D. Ohio (Federal)
VA	City of Roanoke	1:19-op-45696	N.D. Ohio (Federal)

State	Subdivision/Special District	Case No.	Jurisdiction
VA	City of Salem	1:19-op-45697	N.D. Ohio (Federal)
VA	City of Virginia Beach	1:18-op-46137	N.D. Ohio (Federal)
VA	City of Waynesboro	1:19-op-46152	N.D. Ohio (Federal)
VA	City of Winchester	1:20-op-45176	N.D. Ohio (Federal)
VA	County of Accomack	1:19-op-45715	N.D. Ohio (Federal)
VA	County of Alleghany	1:19-op-45700	N.D. Ohio (Federal)
VA	County of Amherst	1:20-op-45046	N.D. Ohio (Federal)
VA	County of Arlington (County Board)	1:21-op-45078	N.D. Ohio (Federal)
VA	County of Bland	1:18-op-46065	N.D. Ohio (Federal)
VA	County of Botetourt	1:20-op-45064	N.D. Ohio (Federal)
VA	County of Buchanan	1:19-op-45253	N.D. Ohio (Federal)
VA	County of Carroll	1:18-op-46068	N.D. Ohio (Federal)
VA	County of Charlotte	1:19-op-45851	N.D. Ohio (Federal)
VA	County of Chesterfield	1:20-op-45173	N.D. Ohio (Federal)
VA	County of Culpeper	1:19-op-45849	N.D. Ohio (Federal)
VA	County of Cumberland	1:19-op-46153	N.D. Ohio (Federal)
VA	County of Dickenson	1:19-op-45252	N.D. Ohio (Federal)
VA	County of Dinwiddie	1:20-op-45291	N.D. Ohio (Federal)
VA	County of Fairfax (Board of Supervisors)	1:19-op-45766	N.D. Ohio (Federal)
VA	County of Fauquier	1:19-op-45686	N.D. Ohio (Federal)
VA	County of Floyd	1:19-op-45698	N.D. Ohio (Federal)
VA	County of Franklin	1:19-op-45701	N.D. Ohio (Federal)
VA	County of Frederick	1:20-op-45233	N.D. Ohio (Federal)
VA	County of Giles	1:19-op-45236	N.D. Ohio (Federal)
VA	County of Goochland	1:20-op-45175	N.D. Ohio (Federal)
VA	County of Grayson	1:18-op-46069	N.D. Ohio (Federal)
VA	County of Greensville	1:19-op-45848	N.D. Ohio (Federal)
VA	County of Halifax	1:19-op-45692	N.D. Ohio (Federal)
VA	County of Henrico	1:20-op-45172	N.D. Ohio (Federal)
VA	County of Henry	1:19-op-45245	N.D. Ohio (Federal)
VA	County of Isle of Wight	1:20-op-45145	N.D. Ohio (Federal)
VA	County of King and Queen	1:20-op-45138	N.D. Ohio (Federal)
VA	County of Lee	1:19-op-45251	N.D. Ohio (Federal)
VA	County of Loudoun	1:19-op-45842	N.D. Ohio (Federal)
VA	County of Louisa	1:19-op-45720	N.D. Ohio (Federal)
VA	County of Madison	1:19-op-45702	N.D. Ohio (Federal)
VA	County of Mecklenburg	1:20-op-45174	N.D. Ohio (Federal)
VA	County of Montgomery	1:19-op-45234	N.D. Ohio (Federal)
VA	County of Northampton	1:20-op-45144	N.D. Ohio (Federal)
VA	County of Northumberland	1:19-op-45688	N.D. Ohio (Federal)
VA	County of Page	1:19-op-45275	N.D. Ohio (Federal)
VA	County of Patrick	1:19-op-46149	N.D. Ohio (Federal)
VA	County of Pittsylvania	1:19-op-45247	N.D. Ohio (Federal)
VA	County of Prince George	1:19-op-45929	N.D. Ohio (Federal)
VA	County of Prince William (Board of County Supervisors)	1:19-op-45687	N.D. Ohio (Federal)
VA	County of Pulaski	1:18-op-46076	N.D. Ohio (Federal)
VA	County of Richmond	1:19-op-45546	N.D. Ohio (Federal)

State	Subdivision/Special District	Case No.	Jurisdiction
VA	County of Roanoke	1:19-op-45695	N.D. Ohio (Federal)
VA	County of Rockbridge	1:19-op-45694	N.D. Ohio (Federal)
VA	County of Russell	1:18-op-46073	N.D. Ohio (Federal)
VA	County of Scott (Board of Supervisors)	1:18-op-46074	N.D. Ohio (Federal)
VA	County of Shenandoah	1:19-op-46150	N.D. Ohio (Federal)
VA	County of Smyth	1:18-op-46077	N.D. Ohio (Federal)
VA	County of Stafford	1:20-op-45178	N.D. Ohio (Federal)
VA	County of Tazewell	1:18-op-46167	N.D. Ohio (Federal)
VA	County of Warren	1:19-op-45993	N.D. Ohio (Federal)
VA	County of Washington	1:19-op-45254	N.D. Ohio (Federal)
VA	County of Westmoreland	1:19-op-45993	N.D. Ohio (Federal)
VA	County of Wise (Board of Supervisors)	1:19-op-45907	N.D. Ohio (Federal)
VA	County of Wythe	1:18-op-46072	N.D. Ohio (Federal)
VA	Sheriff of Virginia Beach City	1:18-op-46137	N.D. Ohio (Federal)
VA	Town of Richlands	1:20-op-45193	N.D. Ohio (Federal)
VT	City of St. Albans	1:19-op-45721	N.D. Ohio (Federal)
WA	City of Anacortes	1:19-op-45029	N.D. Ohio (Federal)
WA	City of Bainbridge Island	1:19-op-45981	N.D. Ohio (Federal)
WA	City of Burlington	1:18-op-45173	N.D. Ohio (Federal)
WA	City of Everett	1:17-op-45046	N.D. Ohio (Federal)
WA	City of Kent	1:18-op-45590	N.D. Ohio (Federal)
WA	City of Kirkland	1:20-op-45121	N.D. Ohio (Federal)
WA	City of Lakewood	1:19-op-45221	N.D. Ohio (Federal)
WA	City of Mount Vernon	1:18-op-45173	N.D. Ohio (Federal)
WA	City of Olympia	1:18-op-46021	N.D. Ohio (Federal)
WA	City of Seattle	17-2-25504-1SEA	WA - King County Superior Court (State)
WA	City of Sedro-Woolley	1:18-op-45173	N.D. Ohio (Federal)
WA	City of Spokane	1:19-op-46092	N.D. Ohio (Federal)
WA	City of Tacoma	1:17-op-45047	N.D. Ohio (Federal)
WA	City of Vancouver	1:19-op-45908	N.D. Ohio (Federal)
WA	County of Chelan	1:18-op-46139	N.D. Ohio (Federal)
WA	County of Clallam	1:18-op-45612	N.D. Ohio (Federal)
WA	County of Clark	1:18-op-45410	N.D. Ohio (Federal)
WA	County of Franklin	1:18-op-45944	N.D. Ohio (Federal)
WA	County of Island	1:18-op-45982	N.D. Ohio (Federal)
WA	County of Jefferson	1:18-op-46023	N.D. Ohio (Federal)
WA	County of King	1:18-op-45231	N.D. Ohio (Federal)
WA	County of Kitsap	1:18-op-45956	N.D. Ohio (Federal)
WA	County of Kittitas	1:18-op-46008	N.D. Ohio (Federal)
WA	County of Lewis	1:18-op-46301	N.D. Ohio (Federal)
WA	County of Lincoln	1:19-op-45962	N.D. Ohio (Federal)
WA	County of Pierce	1:18-op-45195	N.D. Ohio (Federal)
WA	County of San Juan	1:18-op-46291	N.D. Ohio (Federal)
WA	County of Skagit	1:18-op-45173	N.D. Ohio (Federal)
WA	County of Snohomish	1:19-op-45370	N.D. Ohio (Federal)
WA	County of Spokane	1:18-op-45943	N.D. Ohio (Federal)
WA	County of Thurston	1:18-op-45409	N.D. Ohio (Federal)

State	Subdivision/Special District	Case No.	Jurisdiction
WA	County of Walla Walla	1:18-op-46010	N.D. Ohio (Federal)
WA	County of Whatcom	1:18-op-45954	N.D. Ohio (Federal)
WA	County of Whitman	1:18-op-46009	N.D. Ohio (Federal)
WA	La Conner School District	1:18-op-45173	N.D. Ohio (Federal)
WA	Mount Vernon School District	1:18-op-45173	N.D. Ohio (Federal)
WA	Sedro-Woolley School District	1:19-op-45029	N.D. Ohio (Federal)
WI	City of Cudahy	1:21-op-45097	N.D. Ohio (Federal)
WI	City of Franklin	1:21-op-45101	N.D. Ohio (Federal)
WI	City of Greenfield	1:21-op-45102	N.D. Ohio (Federal)
WI	City of Kenosha	1:20-op-45011	N.D. Ohio (Federal)
WI	City of Marinette	1:19-op-46181	N.D. Ohio (Federal)
WI	City of Milwaukee	1:20-op-45044	N.D. Ohio (Federal)
WI	City of Oak Creek	1:21-op-45103	N.D. Ohio (Federal)
WI	City of South Milwaukee	2021CV002934	WI - Circuit Court of Milwaukee County (State)
WI	City of Superior	1:19-op-45331	N.D. Ohio (Federal)
WI	City of Wauwatosa	1:21-op-45104	N.D. Ohio (Federal)
WI	City of West Allis	1:21-op-45105	N.D. Ohio (Federal)
WI	County of Adams	1:17-op-45093	N.D. Ohio (Federal)
WI	County of Ashland	1:17-op-45130	N.D. Ohio (Federal)
WI	County of Barron	1:18-op-45277	N.D. Ohio (Federal)
WI	County of Bayfield	1:17-op-45168	N.D. Ohio (Federal)
WI	County of Brown	1:18-op-45117	N.D. Ohio (Federal)
WI	County of Buffalo	1:17-op-45141	N.D. Ohio (Federal)
WI	County of Burnett	1:17-op-45131	N.D. Ohio (Federal)
WI	County of Calumet	1:17-op-45142	N.D. Ohio (Federal)
WI	County of Chippewa	1:17-op-45132	N.D. Ohio (Federal)
WI	County of Clark	1:17-op-45150	N.D. Ohio (Federal)
WI	County of Columbia	1:17-op-45118	N.D. Ohio (Federal)
WI	County of Crawford	1:18-op-45117	N.D. Ohio (Federal)
WI	County of Dane	1:18-op-45802	N.D. Ohio (Federal)
WI	County of Dodge	1:17-op-45143	N.D. Ohio (Federal)
WI	County of Door	1:17-op-45104	N.D. Ohio (Federal)
WI	County of Douglas	1:17-op-45107	N.D. Ohio (Federal)
WI	County of Dunn	1:17-op-45133	N.D. Ohio (Federal)
WI	County of Eau Claire	1:17-op-45112	N.D. Ohio (Federal)
WI	County of Florence	1:17-op-45125	N.D. Ohio (Federal)
WI	County of Fond du Lac	1:17-op-45106	N.D. Ohio (Federal)
WI	County of Forest	1:17-op-45134	N.D. Ohio (Federal)
WI	County of Grant	1:17-op-45115	N.D. Ohio (Federal)
WI	County of Green	1:17-op-45096	N.D. Ohio (Federal)
WI	County of Green Lake	1:18-op-45832	N.D. Ohio (Federal)
WI	County of Iowa	1:17-op-45099	N.D. Ohio (Federal)
WI	County of Iron	1:18-op-45117	N.D. Ohio (Federal)
WI	County of Jackson	1:17-op-45121	N.D. Ohio (Federal)
WI	County of Jefferson	1:17-op-45122	N.D. Ohio (Federal)
WI	County of Juneau	1:18-op-45117	N.D. Ohio (Federal)
WI	County of Kenosha	1:17-op-45144	N.D. Ohio (Federal)

State	Subdivision/Special District	Case No.	Jurisdiction
WI	County of Kewaunee	1:18-op-45117	N.D. Ohio (Federal)
WI	County of La Crosse	1:18-op-45277	N.D. Ohio (Federal)
WI	County of Lafayette	1:18-op-45277	N.D. Ohio (Federal)
WI	County of Langlade	1:17-op-45124	N.D. Ohio (Federal)
WI	County of Lincoln	1:17-op-45167	N.D. Ohio (Federal)
WI	County of Manitowoc	1:17-op-45135	N.D. Ohio (Federal)
WI	County of Marathon	1:17-op-45095	N.D. Ohio (Federal)
WI	County of Marinette	1:17-op-45145	N.D. Ohio (Federal)
WI	County of Marquette	1:17-op-45136	N.D. Ohio (Federal)
WI	County of Menominee	1:18-op-45277	N.D. Ohio (Federal)
WI	County of Milwaukee	1:18-op-45402	N.D. Ohio (Federal)
WI	County of Monroe	1:17-op-45146	N.D. Ohio (Federal)
WI	County of Oconto	1:17-op-45120	N.D. Ohio (Federal)
WI	County of Oneida	1:17-op-45129	N.D. Ohio (Federal)
WI	County of Outagamie	1:18-op-45117	N.D. Ohio (Federal)
WI	County of Pierce	1:17-op-45165	N.D. Ohio (Federal)
WI	County of Price	1:17-op-45126	N.D. Ohio (Federal)
WI	County of Rock	1:17-op-45108	N.D. Ohio (Federal)
WI	County of Rusk	1:17-op-45116	N.D. Ohio (Federal)
WI	County of Sauk	1:17-op-45098	N.D. Ohio (Federal)
WI	County of Sawyer	1:17-op-45137	N.D. Ohio (Federal)
WI	County of Shawano	1:17-op-45119	N.D. Ohio (Federal)
WI	County of Sheboygan	1:17-op-45128	N.D. Ohio (Federal)
WI	County of St. Croix	1:17-op-45147	N.D. Ohio (Federal)
WI	County of Taylor	1:18-op-45832	N.D. Ohio (Federal)
WI	County of Trempealeau	1:17-op-45138	N.D. Ohio (Federal)
WI	County of Vernon	1:17-op-45148	N.D. Ohio (Federal)
WI	County of Vilas	1:18-op-45832	N.D. Ohio (Federal)
WI	County of Walworth	1:18-op-45988	N.D. Ohio (Federal)
WI	County of Washburn	1:17-op-45123	N.D. Ohio (Federal)
WI	County of Washington	1:17-op-45114	N.D. Ohio (Federal)
WI	County of Waukesha	1:18-op-45978	N.D. Ohio (Federal)
WI	County of Waupaca	1:17-op-45166	N.D. Ohio (Federal)
WI	County of Waushara	1:17-op-45139	N.D. Ohio (Federal)
WI	County of Wood	1:17-op-45127	N.D. Ohio (Federal)
WI	Village of Pleasant Prairie	1:20-op-45010	N.D. Ohio (Federal)
WI	Village of Sturtevant	2021CV000999	WI - Circuit Court of Racine County (State)
WY	City of Casper	1:19-op-45079	N.D. Ohio (Federal)
WY	City of Cheyenne	1:19-op-45280	N.D. Ohio (Federal)
WY	City of Green River	1:19-op-45764	N.D. Ohio (Federal)
WY	City of Riverton	1:19-op-45558	N.D. Ohio (Federal)
WY	City of Rock Springs	1:19-op-45265	N.D. Ohio (Federal)
WY	County of Carbon	1:18-op-45625	N.D. Ohio (Federal)
WY	County of Sweetwater	1:19-op-45031	N.D. Ohio (Federal)

EXHIBIT D
[Intentionally Omitted]

EXHIBIT E
List of Opioid Remediation Uses

Schedule A

Core Strategies

Settling States and **Exhibit G** Participants may choose from among the abatement strategies listed in Schedule B. However, priority may be given to the following core abatement strategies ("*Core Strategies*").[1]

A. NALOXONE OR OTHER FDA-APPROVED DRUG TO REVERSE OPIOID OVERDOSES

1. Expand training for first responders, schools, community support groups and families; and

2. Increase distribution to individuals who are uninsured or whose insurance does not cover the needed service.

B. MEDICATION-ASSISTED TREATMENT ("*MAT*") DISTRIBUTION AND OTHER OPIOID-RELATED TREATMENT

1. Increase distribution of MAT to individuals who are uninsured or whose insurance does not cover the needed service;

2. Provide education to school-based and youth-focused programs that discourage or prevent misuse;

3. Provide MAT education and awareness training to healthcare providers, EMTs, law enforcement, and other first responders; and

4. Provide treatment and recovery support services such as residential and inpatient treatment, intensive outpatient treatment, outpatient therapy or counseling, and recovery housing that allow or integrate medication and with other support services.

C. PREGNANT & POSTPARTUM WOMEN

1. Expand Screening, Brief Intervention, and Referral to Treatment ("*SBIRT*") services to non-Medicaid eligible or uninsured pregnant women;

2. Expand comprehensive evidence-based treatment and recovery services, including MAT, for women with co-occurring Opioid Use Disorder ("*OUD*") and other

[1] As used in this Schedule A, words like "expand," "fund," "provide" or the like shall not indicate a preference for new or existing programs.

Substance Use Disorder ("*SUD*")/Mental Health disorders for uninsured individuals for up to 12 months postpartum; and

3. Provide comprehensive wrap-around services to individuals with OUD, including housing, transportation, job placement/training, and childcare.

D. EXPANDING TREATMENT FOR NEONATAL ABSTINENCE SYNDROME ("*NAS*")

1. Expand comprehensive evidence-based and recovery support for NAS babies;

2. Expand services for better continuum of care with infant-need dyad; and

3. Expand long-term treatment and services for medical monitoring of NAS babies and their families.

E. EXPANSION OF WARM HAND-OFF PROGRAMS AND RECOVERY SERVICES

1. Expand services such as navigators and on-call teams to begin MAT in hospital emergency departments;

2. Expand warm hand-off services to transition to recovery services;

3. Broaden scope of recovery services to include co-occurring SUD or mental health conditions;

4. Provide comprehensive wrap-around services to individuals in recovery, including housing, transportation, job placement/training, and childcare; and

5. Hire additional social workers or other behavioral health workers to facilitate expansions above.

F. TREATMENT FOR INCARCERATED POPULATION

1. Provide evidence-based treatment and recovery support, including MAT for persons with OUD and co-occurring SUD/MH disorders within and transitioning out of the criminal justice system; and

2. Increase funding for jails to provide treatment to inmates with OUD.

G. PREVENTION PROGRAMS

1. Funding for media campaigns to prevent opioid use (similar to the FDA's "Real Cost" campaign to prevent youth from misusing tobacco);

2. Funding for evidence-based prevention programs in schools;

3. Funding for medical provider education and outreach regarding best prescribing practices for opioids consistent with CDC guidelines, including providers at hospitals (academic detailing);

4. Funding for community drug disposal programs; and

5. Funding and training for first responders to participate in pre-arrest diversion programs, post-overdose response teams, or similar strategies that connect at-risk individuals to behavioral health services and supports.

H. EXPANDING SYRINGE SERVICE PROGRAMS

1. Provide comprehensive syringe services programs with more wrap-around services, including linkage to OUD treatment, access to sterile syringes and linkage to care and treatment of infectious diseases.

I. EVIDENCE-BASED DATA COLLECTION AND RESEARCH ANALYZING THE EFFECTIVENESS OF THE ABATEMENT STRATEGIES WITHIN THE STATE

Schedule B

Approved Uses

Support treatment of Opioid Use Disorder (OUD) and any co-occurring Substance Use Disorder or Mental Health (SUD/MH) conditions through evidence-based or evidence-informed programs or strategies that may include, but are not limited to, the following:

PART ONE: TREATMENT

A. TREAT OPIOID USE DISORDER (OUD)

Support treatment of Opioid Use Disorder ("*OUD*") and any co-occurring Substance Use Disorder or Mental Health ("*SUD/MH*") conditions through evidence-based or evidence-informed programs or strategies that may include, but are not limited to, those that:[2]

1. Expand availability of treatment for OUD and any co-occurring SUD/MH conditions, including all forms of Medication-Assisted Treatment ("*MAT*") approved by the U.S. Food and Drug Administration.

2. Support and reimburse evidence-based services that adhere to the American Society of Addiction Medicine ("*ASAM*") continuum of care for OUD and any co-occurring SUD/MH conditions.

3. Expand telehealth to increase access to treatment for OUD and any co-occurring SUD/MH conditions, including MAT, as well as counseling, psychiatric support, and other treatment and recovery support services.

4. Improve oversight of Opioid Treatment Programs ("*OTPs*") to assure evidence-based or evidence-informed practices such as adequate methadone dosing and low threshold approaches to treatment.

5. Support mobile intervention, treatment, and recovery services, offered by qualified professionals and service providers, such as peer recovery coaches, for persons with OUD and any co-occurring SUD/MH conditions and for persons who have experienced an opioid overdose.

6. Provide treatment of trauma for individuals with OUD (*e.g.*, violence, sexual assault, human trafficking, or adverse childhood experiences) and family members (*e.g.*, surviving family members after an overdose or overdose fatality), and training of health care personnel to identify and address such trauma.

[2] As used in this Schedule B, words like "expand," "fund," "provide" or the like shall not indicate a preference for new or existing programs.

7. Support evidence-based withdrawal management services for people with OUD and any co-occurring mental health conditions.

8. Provide training on MAT for health care providers, first responders, students, or other supporting professionals, such as peer recovery coaches or recovery outreach specialists, including telementoring to assist community-based providers in rural or underserved areas.

9. Support workforce development for addiction professionals who work with persons with OUD and any co-occurring SUD/MH conditions.

10. Offer fellowships for addiction medicine specialists for direct patient care, instructors, and clinical research for treatments.

11. Offer scholarships and supports for behavioral health practitioners or workers involved in addressing OUD and any co-occurring SUD/MH or mental health conditions, including, but not limited to, training, scholarships, fellowships, loan repayment programs, or other incentives for providers to work in rural or underserved areas.

12. Provide funding and training for clinicians to obtain a waiver under the federal Drug Addiction Treatment Act of 2000 ("*DATA 2000*") to prescribe MAT for OUD, and provide technical assistance and professional support to clinicians who have obtained a DATA 2000 waiver.

13. Disseminate web-based training curricula, such as the American Academy of Addiction Psychiatry's Provider Clinical Support Service–Opioids web-based training curriculum and motivational interviewing.

14. Develop and disseminate new curricula, such as the American Academy of Addiction Psychiatry's Provider Clinical Support Service for Medication–Assisted Treatment.

B. SUPPORT PEOPLE IN TREATMENT AND RECOVERY

Support people in recovery from OUD and any co-occurring SUD/MH conditions through evidence-based or evidence-informed programs or strategies that may include, but are not limited to, the programs or strategies that:

1. Provide comprehensive wrap-around services to individuals with OUD and any co-occurring SUD/MH conditions, including housing, transportation, education, job placement, job training, or childcare.

2. Provide the full continuum of care of treatment and recovery services for OUD and any co-occurring SUD/MH conditions, including supportive housing, peer support services and counseling, community navigators, case management, and connections to community-based services.

3. Provide counseling, peer-support, recovery case management and residential treatment with access to medications for those who need it to persons with OUD and any co-occurring SUD/MH conditions.

4. Provide access to housing for people with OUD and any co-occurring SUD/MH conditions, including supportive housing, recovery housing, housing assistance programs, training for housing providers, or recovery housing programs that allow or integrate FDA-approved mediation with other support services.

5. Provide community support services, including social and legal services, to assist in deinstitutionalizing persons with OUD and any co-occurring SUD/MH conditions.

6. Support or expand peer-recovery centers, which may include support groups, social events, computer access, or other services for persons with OUD and any co-occurring SUD/MH conditions.

7. Provide or support transportation to treatment or recovery programs or services for persons with OUD and any co-occurring SUD/MH conditions.

8. Provide employment training or educational services for persons in treatment for or recovery from OUD and any co-occurring SUD/MH conditions.

9. Identify successful recovery programs such as physician, pilot, and college recovery programs, and provide support and technical assistance to increase the number and capacity of high-quality programs to help those in recovery.

10. Engage non-profits, faith-based communities, and community coalitions to support people in treatment and recovery and to support family members in their efforts to support the person with OUD in the family.

11. Provide training and development of procedures for government staff to appropriately interact and provide social and other services to individuals with or in recovery from OUD, including reducing stigma.

12. Support stigma reduction efforts regarding treatment and support for persons with OUD, including reducing the stigma on effective treatment.

13. Create or support culturally appropriate services and programs for persons with OUD and any co-occurring SUD/MH conditions, including new Americans.

14. Create and/or support recovery high schools.

15. Hire or train behavioral health workers to provide or expand any of the services or supports listed above.

C. CONNECT PEOPLE WHO NEED HELP TO THE HELP THEY NEED (CONNECTIONS TO CARE)

Provide connections to care for people who have—or are at risk of developing—OUD and any co-occurring SUD/MH conditions through evidence-based or evidence-informed programs or strategies that may include, but are not limited to, those that:

1. Ensure that health care providers are screening for OUD and other risk factors and know how to appropriately counsel and treat (or refer if necessary) a patient for OUD treatment.

2. Fund SBIRT programs to reduce the transition from use to disorders, including SBIRT services to pregnant women who are uninsured or not eligible for Medicaid.

3. Provide training and long-term implementation of SBIRT in key systems (health, schools, colleges, criminal justice, and probation), with a focus on youth and young adults when transition from misuse to opioid disorder is common.

4. Purchase automated versions of SBIRT and support ongoing costs of the technology.

5. Expand services such as navigators and on-call teams to begin MAT in hospital emergency departments.

6. Provide training for emergency room personnel treating opioid overdose patients on post-discharge planning, including community referrals for MAT, recovery case management or support services.

7. Support hospital programs that transition persons with OUD and any co-occurring SUD/MH conditions, or persons who have experienced an opioid overdose, into clinically appropriate follow-up care through a bridge clinic or similar approach.

8. Support crisis stabilization centers that serve as an alternative to hospital emergency departments for persons with OUD and any co-occurring SUD/MH conditions or persons that have experienced an opioid overdose.

9. Support the work of Emergency Medical Systems, including peer support specialists, to connect individuals to treatment or other appropriate services following an opioid overdose or other opioid-related adverse event.

10. Provide funding for peer support specialists or recovery coaches in emergency departments, detox facilities, recovery centers, recovery housing, or similar settings; offer services, supports, or connections to care to persons with OUD and any co-occurring SUD/MH conditions or to persons who have experienced an opioid overdose.

11. Expand warm hand-off services to transition to recovery services.

12. Create or support school-based contacts that parents can engage with to seek immediate treatment services for their child; and support prevention, intervention, treatment, and recovery programs focused on young people.

13. Develop and support best practices on addressing OUD in the workplace.

14. Support assistance programs for health care providers with OUD.

15. Engage non-profits and the faith community as a system to support outreach for treatment.

16. Support centralized call centers that provide information and connections to appropriate services and supports for persons with OUD and any co-occurring SUD/MH conditions.

D. ADDRESS THE NEEDS OF CRIMINAL JUSTICE-INVOLVED PERSONS

Address the needs of persons with OUD and any co-occurring SUD/MH conditions who are involved in, are at risk of becoming involved in, or are transitioning out of the criminal justice system through evidence-based or evidence-informed programs or strategies that may include, but are not limited to, those that:

1. Support pre-arrest or pre-arraignment diversion and deflection strategies for persons with OUD and any co-occurring SUD/MH conditions, including established strategies such as:

    a. Self-referral strategies such as the Angel Programs or the Police Assisted Addiction Recovery Initiative ("*PAARI*");

    b. Active outreach strategies such as the Drug Abuse Response Team ("*DART*") model;

    c. "Naloxone Plus" strategies, which work to ensure that individuals who have received naloxone to reverse the effects of an overdose are then linked to treatment programs or other appropriate services;

    d. Officer prevention strategies, such as the Law Enforcement Assisted Diversion ("*LEAD*") model;

    e. Officer intervention strategies such as the Leon County, Florida Adult Civil Citation Network or the Chicago Westside Narcotics Diversion to Treatment Initiative; or

    f. Co-responder and/or alternative responder models to address OUD-related 911 calls with greater SUD expertise.

2. Support pre-trial services that connect individuals with OUD and any co-occurring SUD/MH conditions to evidence-informed treatment, including MAT, and related services.

3. Support treatment and recovery courts that provide evidence-based options for persons with OUD and any co-occurring SUD/MH conditions.

4. Provide evidence-informed treatment, including MAT, recovery support, harm reduction, or other appropriate services to individuals with OUD and any co-occurring SUD/MH conditions who are incarcerated in jail or prison.

5. Provide evidence-informed treatment, including MAT, recovery support, harm reduction, or other appropriate services to individuals with OUD and any co-occurring SUD/MH conditions who are leaving jail or prison or have recently left jail or prison, are on probation or parole, are under community corrections supervision, or are in re-entry programs or facilities.

6. Support critical time interventions ("*CTI*"), particularly for individuals living with dual-diagnosis OUD/serious mental illness, and services for individuals who face immediate risks and service needs and risks upon release from correctional settings.

7. Provide training on best practices for addressing the needs of criminal justice-involved persons with OUD and any co-occurring SUD/MH conditions to law enforcement, correctional, or judicial personnel or to providers of treatment, recovery, harm reduction, case management, or other services offered in connection with any of the strategies described in this section.

E. ADDRESS THE NEEDS OF PREGNANT OR PARENTING WOMEN AND THEIR FAMILIES, INCLUDING BABIES WITH NEONATAL ABSTINENCE SYNDROME

Address the needs of pregnant or parenting women with OUD and any co-occurring SUD/MH conditions, and the needs of their families, including babies with neonatal abstinence syndrome ("*NAS*"), through evidence-based or evidence-informed programs or strategies that may include, but are not limited to, those that:

1. Support evidence-based or evidence-informed treatment, including MAT, recovery services and supports, and prevention services for pregnant women—or women who could become pregnant—who have OUD and any co-occurring SUD/MH conditions, and other measures to educate and provide support to families affected by Neonatal Abstinence Syndrome.

2. Expand comprehensive evidence-based treatment and recovery services, including MAT, for uninsured women with OUD and any co-occurring SUD/MH conditions for up to 12 months postpartum.

3. Provide training for obstetricians or other healthcare personnel who work with pregnant women and their families regarding treatment of OUD and any co-occurring SUD/MH conditions.

4. Expand comprehensive evidence-based treatment and recovery support for NAS babies; expand services for better continuum of care with infant-need dyad; and expand long-term treatment and services for medical monitoring of NAS babies and their families.

5. Provide training to health care providers who work with pregnant or parenting women on best practices for compliance with federal requirements that children born with NAS get referred to appropriate services and receive a plan of safe care.

6. Provide child and family supports for parenting women with OUD and any co-occurring SUD/MH conditions.

7. Provide enhanced family support and child care services for parents with OUD and any co-occurring SUD/MH conditions.

8. Provide enhanced support for children and family members suffering trauma as a result of addiction in the family; and offer trauma-informed behavioral health treatment for adverse childhood events.

9. Offer home-based wrap-around services to persons with OUD and any co-occurring SUD/MH conditions, including, but not limited to, parent skills training.

10. Provide support for Children's Services—Fund additional positions and services, including supportive housing and other residential services, relating to children being removed from the home and/or placed in foster care due to custodial opioid use.

PART TWO: PREVENTION

A. PREVENT OVER-PRESCRIBING AND ENSURE APPROPRIATE PRESCRIBING AND DISPENSING OF OPIOIDS

Support efforts to prevent over-prescribing and ensure appropriate prescribing and dispensing of opioids through evidence-based or evidence-informed programs or strategies that may include, but are not limited to, the following:

1. Funding medical provider education and outreach regarding best prescribing practices for opioids consistent with the Guidelines for Prescribing Opioids for Chronic Pain from the U.S. Centers for Disease Control and Prevention, including providers at hospitals (academic detailing).

2. Training for health care providers regarding safe and responsible opioid prescribing, dosing, and tapering patients off opioids.

3. Continuing Medical Education (CME) on appropriate prescribing of opioids.

4. Providing Support for non-opioid pain treatment alternatives, including training providers to offer or refer to multi-modal, evidence-informed treatment of pain.

5. Supporting enhancements or improvements to Prescription Drug Monitoring Programs ("*PDMPs*"), including, but not limited to, improvements that:

    a. Increase the number of prescribers using PDMPs;

    b. Improve point-of-care decision-making by increasing the quantity, quality, or format of data available to prescribers using PDMPs, by improving the interface that prescribers use to access PDMP data, or both; or

    c. Enable states to use PDMP data in support of surveillance or intervention strategies, including MAT referrals and follow-up for individuals identified within PDMP data as likely to experience OUD in a manner that complies with all relevant privacy and security laws and rules.

6. Ensuring PDMPs incorporate available overdose/naloxone deployment data, including the United States Department of Transportation's Emergency Medical Technician overdose database in a manner that complies with all relevant privacy and security laws and rules.

7. Increasing electronic prescribing to prevent diversion or forgery.

8. Educating dispensers on appropriate opioid dispensing.

B. PREVENT MISUSE OF OPIOIDS

Support efforts to discourage or prevent misuse of opioids through evidence-based or evidence-informed programs or strategies that may include, but are not limited to, the following:

1. Funding media campaigns to prevent opioid misuse.

2. Corrective advertising or affirmative public education campaigns based on evidence.

3. Public education relating to drug disposal.

4. Drug take-back disposal or destruction programs.

5. Funding community anti-drug coalitions that engage in drug prevention efforts.

6. Supporting community coalitions in implementing evidence-informed prevention, such as reduced social access and physical access, stigma reduction—including staffing, educational campaigns, support for people in treatment or recovery, or training of coalitions in evidence-informed implementation, including the Strategic Prevention Framework developed by the U.S. Substance Abuse and Mental Health Services Administration ("*SAMHSA*").

7. Engaging non-profits and faith-based communities as systems to support prevention.

8. Funding evidence-based prevention programs in schools or evidence-informed school and community education programs and campaigns for students, families, school employees, school athletic programs, parent-teacher and student associations, and others.

9. School-based or youth-focused programs or strategies that have demonstrated effectiveness in preventing drug misuse and seem likely to be effective in preventing the uptake and use of opioids.

10. Create or support community-based education or intervention services for families, youth, and adolescents at risk for OUD and any co-occurring SUD/MH conditions.

11. Support evidence-informed programs or curricula to address mental health needs of young people who may be at risk of misusing opioids or other drugs, including emotional modulation and resilience skills.

12. Support greater access to mental health services and supports for young people, including services and supports provided by school nurses, behavioral health workers or other school staff, to address mental health needs in young people that (when not properly addressed) increase the risk of opioid or another drug misuse.

C. PREVENT OVERDOSE DEATHS AND OTHER HARMS (HARM REDUCTION)

Support efforts to prevent or reduce overdose deaths or other opioid-related harms through evidence-based or evidence-informed programs or strategies that may include, but are not limited to, the following:

1. Increased availability and distribution of naloxone and other drugs that treat overdoses for first responders, overdose patients, individuals with OUD and their friends and family members, schools, community navigators and outreach workers, persons being released from jail or prison, or other members of the general public.

2. Public health entities providing free naloxone to anyone in the community.

3. Training and education regarding naloxone and other drugs that treat overdoses for first responders, overdose patients, patients taking opioids, families, schools, community support groups, and other members of the general public.

4. Enabling school nurses and other school staff to respond to opioid overdoses, and provide them with naloxone, training, and support.

5. Expanding, improving, or developing data tracking software and applications for overdoses/naloxone revivals.

6. Public education relating to emergency responses to overdoses.

7. Public education relating to immunity and Good Samaritan laws.

8. Educating first responders regarding the existence and operation of immunity and Good Samaritan laws.

9. Syringe service programs and other evidence-informed programs to reduce harms associated with intravenous drug use, including supplies, staffing, space, peer support services, referrals to treatment, fentanyl checking, connections to care, and the full range of harm reduction and treatment services provided by these programs.

10. Expanding access to testing and treatment for infectious diseases such as HIV and Hepatitis C resulting from intravenous opioid use.

11. Supporting mobile units that offer or provide referrals to harm reduction services, treatment, recovery supports, health care, or other appropriate services to persons that use opioids or persons with OUD and any co-occurring SUD/MH conditions.

12. Providing training in harm reduction strategies to health care providers, students, peer recovery coaches, recovery outreach specialists, or other professionals that provide care to persons who use opioids or persons with OUD and any co-occurring SUD/MH conditions.

13. Supporting screening for fentanyl in routine clinical toxicology testing.

PART THREE: OTHER STRATEGIES

A. FIRST RESPONDERS

In addition to items in section C, D and H relating to first responders, support the following:

1. Education of law enforcement or other first responders regarding appropriate practices and precautions when dealing with fentanyl or other drugs.

2. Provision of wellness and support services for first responders and others who experience secondary trauma associated with opioid-related emergency events.

B. LEADERSHIP, PLANNING AND COORDINATION

Support efforts to provide leadership, planning, coordination, facilitations, training and technical assistance to abate the opioid epidemic through activities, programs, or strategies that may include, but are not limited to, the following:

1. Statewide, regional, local or community regional planning to identify root causes of addiction and overdose, goals for reducing harms related to the opioid epidemic, and areas and populations with the greatest needs for treatment intervention services, and to support training and technical assistance and other strategies to abate the opioid epidemic described in this opioid abatement strategy list.

2. A dashboard to (a) share reports, recommendations, or plans to spend opioid settlement funds; (b) to show how opioid settlement funds have been spent; (c) to report program or strategy outcomes; or (d) to track, share or visualize key opioid- or health-related indicators and supports as identified through collaborative statewide, regional, local or community processes.

3. Invest in infrastructure or staffing at government or not-for-profit agencies to support collaborative, cross-system coordination with the purpose of preventing overprescribing, opioid misuse, or opioid overdoses, treating those with OUD and any co-occurring SUD/MH conditions, supporting them in treatment or recovery, connecting them to care, or implementing other strategies to abate the opioid epidemic described in this opioid abatement strategy list.

4. Provide resources to staff government oversight and management of opioid abatement programs.

C. TRAINING

In addition to the training referred to throughout this document, support training to abate the opioid epidemic through activities, programs, or strategies that may include, but are not limited to, those that:

1. Provide funding for staff training or networking programs and services to improve the capability of government, community, and not-for-profit entities to abate the opioid crisis.

2. Support infrastructure and staffing for collaborative cross-system coordination to prevent opioid misuse, prevent overdoses, and treat those with OUD and any co-occurring SUD/MH conditions, or implement other strategies to abate the opioid epidemic described in this opioid abatement strategy list (*e.g.*, health care, primary care, pharmacies, PDMPs, etc.).

D. RESEARCH

Support opioid abatement research that may include, but is not limited to, the following:

1. Monitoring, surveillance, data collection and evaluation of programs and strategies described in this opioid abatement strategy list.

2. Research non-opioid treatment of chronic pain.

3. Research on improved service delivery for modalities such as SBIRT that demonstrate promising but mixed results in populations vulnerable to opioid use disorders.

4. Research on novel harm reduction and prevention efforts such as the provision of fentanyl test strips.

5. Research on innovative supply-side enforcement efforts such as improved detection of mail-based delivery of synthetic opioids.

6. Expanded research on swift/certain/fair models to reduce and deter opioid misuse within criminal justice populations that build upon promising approaches used to address other substances (*e.g.*, Hawaii HOPE and Dakota 24/7).

7. Epidemiological surveillance of OUD-related behaviors in critical populations, including individuals entering the criminal justice system, including, but not limited to approaches modeled on the Arrestee Drug Abuse Monitoring ("*ADAM*") system.

8. Qualitative and quantitative research regarding public health risks and harm reduction opportunities within illicit drug markets, including surveys of market participants who sell or distribute illicit opioids.

9. Geospatial analysis of access barriers to MAT and their association with treatment engagement and treatment outcomes.

EXHIBIT F-1
List of States and Pre-Credit Overall Allocation Percentages

Alabama	1.5958653635%
Alaska	0.2283101787%
American Samoa	0.0171221696%
Arizona	2.3755949882%
Arkansas	0.9322152924%
California	9.9213830698%
Colorado	1.6616291219%
Connecticut	1.2938102647%
Delaware	0.4420285052%
District of Columbia	0.1799774824%
Florida	7.0259134409%
Georgia	2.7882080114%
Guam	0.0480366565%
Hawaii	0.3246488040%
Idaho	0.4919080117%
Illinois	3.3263363702%
Indiana	2.2168933059%
Iowa	0.7419256132%
Kansas	0.7840793410%
Kentucky	1.9963344879%
Louisiana	1.4650905059%
Maine	0.5293231313%
Maryland	2.1106090494%
Massachusetts	2.3035761083%
Michigan	3.4020234989%
Minnesota	1.2972597706%
Mississippi	0.8624327860%
Missouri	2.0056475170%
Montana	0.3125481816%
N. Mariana Islands	0.0167059202%
Nebraska	0.4171546352%
Nevada	1.2017657135%
New Hampshire	0.5784834777%
New Jersey	2.7551354545%
New Mexico	0.7989379794%
New York	5.3903813405%
North Carolina	3.2502525994%

North Dakota	0.1700251989%
Ohio	4.3567051408%
Oklahoma	1.5322312508%
Oregon	1.3741405009%
Pennsylvania	4.5882419559%
Puerto Rico	0.7101195950%
Rhode Island	0.4465429178%
South Carolina	1.5393083548%
South Dakota	0.1982071487%
Tennessee	2.6881474977%
Texas	6.2932157196%
Utah	1.1466798699%
Vermont	0.2544890561%
Virgin Islands	0.0315673573%
Virginia	2.2801150757%
Washington	2.3189040182%
West Virginia	1.0567416533%
Wisconsin	1.7582560561%
Wyoming	0.1668134842%

EXHIBIT F-2
List of Eligible Settling States and Overall Allocation Percentages

Alabama	1.89200243102%
Alaska	0.27067660158%
American Samoa	0.02029944832%
Arizona	2.81642273552%
Arkansas	1.10520200495%
California	11.44545606988%
Colorado	1.96996965401%
Connecticut	1.53389641887%
Delaware	0.52405361097%
District of Columbia	0.21337503900%
Georgia	3.30560237492%
Guam	0.05695058797%
Hawaii	0.38489232262%
Idaho	0.58318901784%
Illinois	3.94358862758%
Indiana	2.62827154459%
Iowa	0.87960118435%
Kansas	0.92957717690%
Kentucky	2.36678468650%
Maine	0.62754708146%
Maryland	2.50226462938%
Massachusetts	2.73103965821%
Michigan	4.03332065304%
Minnesota	1.53798603302%
Mississippi	1.02247029410%
Missouri	2.37782588971%
Montana	0.37054624593%
N. Mariana Islands	0.01980595749%
Nebraska	0.49456401641%
Nevada	1.42477160259%
New Hampshire	0.68582987703%
New Jersey	3.26639270254%
New Mexico	0.94719306138%
North Carolina	3.85338635698%
North Dakota	0.20157595806%
Ohio	5.16515798008%
Oklahoma	1.81656004174%

Oregon	1.62913315104%
Pennsylvania	5.43965996948%
Puerto Rico	0.84189307619%
South Carolina	1.82495040990%
South Dakota	0.23498749685%
Tennessee	3.18697411246%
Texas	7.46101752221%
Utah	1.35946374363%
Vermont	0.30171336741%
Virgin Islands	0.03742516012%
Virginia	2.70322507443%
Washington	2.74921189468%
Wisconsin	2.08452718413%
Wyoming	0.19776826088%

EXHIBIT G

Subdivisions Eligible to Receive Direct Allocations from the Subdivision Fund and Default Subdivision Fund Allocation Percentages

The Subdivisions and Special Districts set forth on this **Exhibit G** are eligible to receive direct allocations from the Subdivision Fund, if such Subdivisions and Special Districts are otherwise eligible to receive such funds under this Agreement. By default, the Subdivisions and Special Districts set forth on this **Exhibit G** shall include all Subdivisions and Special Districts set forth on **Exhibit G** of the national opioid settlement agreement dated July 21, 2021 with Janssen Pharmaceuticals, Inc., et al., including all amendments up to the Preliminary Agreement Date of this agreement. A State may elect to add any additional Subdivisions and Special Districts to this **Exhibit G** at any time prior to the Initial Participation Date.

Immediately upon the effectiveness of any State-Subdivision Agreement, Allocation Statute, Statutory Trust, or voluntary redistribution allowed by **subsection VIII.E.3** (or upon the effectiveness of an amendment to any State-Subdivision Agreement, Allocation Statute, Statutory Trust, or voluntary redistribution allowed by **subsection VIII.E.3**) that addresses allocation from the Subdivision Fund, whether before or after the Initial Participation Date, this **Exhibit G** will automatically be amended to reflect the allocation from the Subdivision Fund pursuant to the State-Subdivision Agreement, Allocation Statute, Statutory Trust, or voluntary redistribution allowed by **subsection VIII.E.3**.

For the avoidance of doubt, inclusion on this **Exhibit G** shall not create any claim for any amount of the Settlement Fund, and no such amounts shall be allocated or distributed to any Subdivision or Special District included herein if such Subdivision or Special District does not otherwise meet all requirements to receive any such funds pursuant to the Agreement.

State ID	Qualifying Subdivision	Consolidated State Allocation
AL1	Abbeville City, Alabama	0.05373276788371%
AL2	Alabaster City, Alabama	0.50906155914420%
AL3	Albertville City, Alabama	0.30073173498551%
AL4	Alexander City, Alabama	0.31021586558805%
AL5	Anniston City, Alabama	0.80101152336447%
AL6	Arab City, Alabama	0.19249341507944%
AL7	Argo Town, Alabama	0.02394095067075%
AL8	Ashland Town, Alabama	0.03903714157458%
AL9	Ashville City, Alabama	0.01799180180480%
AL10	Athens City, Alabama	0.34982234331958%
AL11	Attalla City, Alabama	0.16452490218524%
AL12	Auburn City, Alabama	0.49379760320342%
AL13	Autauga County, Alabama	0.25196509791885%
AL14	Baldwin County, Alabama	1.47023732753838%
AL15	Barbour County, Alabama	0.07277031699064%
AL235	Bay Minette City, Alabama	0.12614031368064%
AL16	Berry Town, Alabama	0.02060389726110%
AL17	Bessemer City, Alabama	0.58643322270761%
AL18	Bibb County, Alabama	0.32904730429155%
AL19	Birmingham City, Alabama	4.18442675390468%
AL20	Blount County, Alabama	0.74378299576171%
AL21	Boaz City, Alabama	0.16593254403002%
AL22	Brent City, Alabama	0.06233303941215%
AL236	Brewton City, Alabama	0.22130588319049%
AL23	Bridgeport City, Alabama	0.00151300231408%
AL24	Brookwood Town, Alabama	0.00696629136887%
AL25	Brundidge City, Alabama	0.01089862331296%
AL26	Bullock County, Alabama	0.06418709145492%
AL27	Butler County, Alabama	0.05373624201937%
AL28	Butler Town, Alabama	0.08203304449913%
AL29	Calera City, Alabama	0.24319709382201%
AL30	Calhoun County, Alabama	0.73004532177506%
AL31	Camp Hill Town, Alabama	0.00607441256105%
AL32	Carbon Hill City, Alabama	0.09325758719295%
AL33	Cedar Bluff Town, Alabama	0.05726177540570%
AL34	Center Point City, Alabama	0.01073160505284%
AL35	Centre City, Alabama	0.14450358825257%
AL36	Centreville City, Alabama	0.02291656767950%
AL37	Chambers County, Alabama	0.42645541213545%
AL39	Cherokee County, Alabama	0.30474566041478%
AL40	Cherokee Town, Alabama	0.00837480986470%
AL41	Chickasaw City, Alabama	0.08065098787772%
AL237	Childersburg City, Alabama	0.09673766459870%
AL42	Chilton County, Alabama	0.65834253848868%
AL43	Choctaw County, Alabama	0.12575403525127%
AL44	Clanton City, Alabama	0.16879497206515%
AL45	Clarke County, Alabama	0.24012462668797%
AL46	Clay County, Alabama	0.16558350703617%
AL47	Cleburne County, Alabama	0.20515352257755%

State ID	Qualifying Subdivision	Consolidated State Allocation
AL48	Cleveland Town, Alabama	0.01274799988344%
AL49	Coffee County, Alabama	0.31178909707642%
AL50	Colbert County, Alabama	0.31838531182613%
AL238	Columbiana City, Alabama	0.05006719760858%
AL51	Conecuh County, Alabama	0.15445396734178%
AL52	Coosa County, Alabama	0.12178647492221%
AL53	Cordova City, Alabama	0.09563175305939%
AL54	Covington County, Alabama	0.45692575726444%
AL55	Crenshaw County, Alabama	0.14376470128801%
AL56	Cullman City, Alabama	0.53795721169973%
AL57	Cullman County, Alabama	0.89679454743357%
AL58	Dadeville City, Alabama	0.02418310117309%
AL59	Dale County, Alabama	0.24320907471975%
AL60	Daleville City, Alabama	0.07752611649176%
AL61	Dallas County, Alabama	0.20683597829357%
AL62	Daphne City, Alabama	0.32129647516618%
AL63	Dauphin Island Town, Alabama	0.04612275489251%
AL64	De Kalb County, Alabama	0.40059258260517%
AL65	Decatur City, Alabama	1.88368966680214%
AL66	Demopolis City, Alabama	0.14633737991542%
AL67	Dora City, Alabama	0.09240281994643%
AL68	Dothan City, Alabama	1.09030734534639%
AL69	Double Springs Town, Alabama	0.08025220905367%
AL70	Douglas Town, Alabama	0.00097275798472%
AL239	East Brewton City, Alabama	0.02656781932074%
AL71	Elmore County, Alabama	0.55644997087924%
AL72	Enterprise City, Alabama	0.33245406769430%
AL73	Escambia County, Alabama	0.65163401499834%
AL74	Etowah County, Alabama	1.02826912043695%
AL75	Eufaula City, Alabama	0.21259346526420%
AL76	Evergreen City, Alabama	0.04145059439568%
AL77	Fairfield City, Alabama	0.11699106378085%
AL78	Fairhope City, Alabama	0.22328055592462%
AL79	Faunsdale Town, Alabama	0.00027565805375%
AL80	Fayette City, Alabama	0.07882554063416%
AL81	Fayette County, Alabama	0.13876915395782%
AL82	Florence City, Alabama	0.89173419286246%
AL83	Foley City, Alabama	0.34393082614331%
AL84	Fort Deposit Town, Alabama	0.00516071488254%
AL85	Fort Payne City, Alabama	0.58210250156216%
AL86	Franklin County, Alabama	0.28807497174883%
AL87	Fultondale City, Alabama	0.09530547652440%
AL88	Gadsden City, Alabama	0.83652189774753%
AL90	Geneva City, Alabama	0.06639031036577%
AL91	Geneva County, Alabama	0.22068995465343%
AL92	Georgiana Town, Alabama	0.01833389052733%
AL93	Geraldine Town, Alabama	0.01101187364176%
AL94	Gilbertown, Alabama	0.00201561558522%
AL95	Grant Town, Alabama	0.01702349201247%

State ID	Qualifying Subdivision	Consolidated State Allocation
AL96	Graysville City, Alabama	0.03683772148497%
AL97	Greene County, Alabama	0.07053609060731%
AL98	Greensboro City, Alabama	0.02495617752877%
AL99	Greenville City, Alabama	0.17114173446901%
AL100	Guin City, Alabama	0.02535375501618%
AL101	Gulf Shores City, Alabama	0.48785192847313%
AL102	Guntersville City, Alabama	0.25418471345127%
AL103	Gurley Town, Alabama	0.00751669835675%
AL104	Hale County, Alabama	0.13189455379552%
AL105	Haleyville City, Alabama	0.14259976191105%
AL106	Hamilton City, Alabama	0.09032285168011%
AL107	Hammondville Town, Alabama	0.00490310934680%
AL108	Hartselle City, Alabama	0.06358502699195%
AL109	Headland City, Alabama	0.06278880055472%
AL110	Helena City, Alabama	0.13940462856652%
AL111	Henagar City, Alabama	0.03432173295908%
AL112	Henry County, Alabama	0.08134656178648%
AL113	Homewood City, Alabama	0.40003759755067%
AL114	Hoover City, Alabama	1.41830120728766%
AL115	Houston County, Alabama	0.55870611353893%
AL116	Hueytown City, Alabama	0.19444760015375%
AL117	Huntsville City, Alabama	3.18917672789720%
AL118	Irondale City, Alabama	0.17364096921920%
AL119	Jackson County, Alabama	0.15808077015917%
AL120	Jacksonville City, Alabama	0.25009708439633%
AL121	Jasper City, Alabama	1.40982301753567%
AL122	Jefferson County, Alabama	5.50780373047089%
AL123	Killen Town, Alabama	0.01833161772830%
AL124	Lamar County, Alabama	0.16280419850840%
AL125	Lanett City, Alabama	0.12800105424627%
AL126	Lauderdale County, Alabama	0.47859088932963%
AL127	Lawrence County, Alabama	0.45357831391636%
AL129	Leeds City, Alabama	0.14992359703585%
AL130	Leesburg Town, Alabama	0.01918722915732%
AL131	Leighton Town, Alabama	0.00564699646923%
AL132	Level Plains Town, Alabama	0.00350595484612%
AL133	Limestone County, Alabama	0.58188759217962%
AL134	Lincoln City, Alabama	0.18466222627409%
AL135	Linden City, Alabama	0.01718012033418%
AL136	Locust Fork Town, Alabama	0.00390814286871%
AL137	Louisville Town, Alabama	0.00463180207977%
AL138	Lowndes County, Alabama	0.06941452922326%
AL240	Loxley Town, Alabama	0.04113340905681%
AL139	Luverne City, Alabama	0.01532252921863%
AL140	Macon County, Alabama	0.13647706860490%
AL141	Madison City, Alabama	0.47088048355844%
AL142	Madison County, Alabama	1.31238390221929%
AL143	Marengo County, Alabama	0.04980089049941%
AL144	Marion City, Alabama	0.02355243191090%

State ID	Qualifying Subdivision	Consolidated State Allocation
AL145	Marion County, Alabama	0.22296850061784%
AL146	Marshall County, Alabama	0.74162828487587%
AL147	McKenzie Town, Alabama	0.00440552870209%
AL148	Midfield City, Alabama	0.00038923306812%
AL149	Millbrook City, Alabama	0.24754158163587%
AL150	Mobile City, Alabama	3.22757190115156%
AL151	Mobile County, Alabama	2.76021701591658%
AL152	Monroe County, Alabama	0.18825776187055%
AL153	Monroeville City, Alabama	0.10619523592115%
AL154	Montgomery City, Alabama	1.77726471583620%
AL155	Montgomery County, Alabama	0.98033322388421%
AL156	Moody City, Alabama	0.03620711715990%
AL157	Morgan County, Alabama	0.31373818458719%
AL158	Moulton City, Alabama	0.13546080275305%
AL159	Mountain Brook City, Alabama	0.35653362663731%
AL160	Munford Town, Alabama	0.02417891272917%
AL161	Muscle Shoals City, Alabama	0.26828019094231%
AL162	Nauvoo Town, Alabama	0.01870510354600%
AL163	New Hope City, Alabama	0.01307908176496%
AL164	Northport City, Alabama	0.42416628142128%
AL165	Oakman Town, Alabama	0.04189836827309%
AL166	Oneonta City, Alabama	0.27040610221760%
AL167	Opelika City, Alabama	0.53658372677752%
AL168	Opp City, Alabama	0.09265286030826%
AL169	Orange Beach City, Alabama	0.29416707967375%
AL170	Oxford City, Alabama	0.35237875519965%
AL171	Ozark City, Alabama	0.29499421617778%
AL172	Parrish Town, Alabama	0.11686245582433%
AL173	Pelham City, Alabama	0.68738196181712%
AL174	Pell City, Alabama	0.44443071991301%
AL175	Perry County, Alabama	0.05087894401632%
AL176	Phenix City, Alabama	0.62594382078864%
AL177	Pickens County, Alabama	0.28661898422184%
AL178	Piedmont City, Alabama	0.14348703018370%
AL179	Pike County, Alabama	0.02971580831969%
AL181	Pleasant Grove City, Alabama	0.05168400190121%
AL182	Powell Town, Alabama	0.00530497268382%
AL183	Prattville City, Alabama	0.60331346344410%
AL184	Priceville Town, Alabama	0.01217687795583%
AL185	Prichard City, Alabama	0.11003827933194%
AL186	Ragland Town, Alabama	0.01519801230036%
AL187	Rainbow City, Alabama	0.13460113275434%
AL188	Rainsville City, Alabama	0.18816655769234%
AL189	Randolph County, Alabama	0.17748105799125%
AL190	Red Bay City, Alabama	0.06274639661854%
AL241	Roanoke City, Alabama	0.10908084650639%
AL191	Robertsdale City, Alabama	0.08564458709446%
AL192	Rockford Town, Alabama	0.00588596505293%
AL193	Russell County, Alabama	0.17037596353878%

State ID	Qualifying Subdivision	Consolidated State Allocation
AL194	Russellville City, Alabama	0.31690084937415%
AL195	Saraland City, Alabama	0.24847953332688%
AL196	Satsuma City, Alabama	0.06260301546832%
AL197	Scottsboro City, Alabama	0.66355520306333%
AL198	Selma City, Alabama	0.26395099581907%
AL271	Semmes City, Alabama	0.04200467033057%
AL199	Sheffield City, Alabama	0.16093939937308%
AL200	Shelby County, Alabama	1.63752907032528%
AL201	Sipsey Town, Alabama	0.03758758282199%
AL202	Slocomb City, Alabama	0.04424009805052%
AL203	Spanish Fort City, Alabama	0.02939683721014%
AL204	Springville City, Alabama	0.05781214992503%
AL205	St Clair County, Alabama	1.03787114437202%
AL206	Sumiton City, Alabama	0.23258714845438%
AL242	Summerdale Town, Alabama	0.02450324115071%
AL207	Sumter County, Alabama	0.11813782076557%
AL208	Sweet Water Town, Alabama	0.00030000947192%
AL209	Sylacauga City, Alabama	0.23084021018303%
AL210	Talladega City, Alabama	0.22820288665750%
AL211	Talladega County, Alabama	0.51585677368324%
AL212	Tallapoosa County, Alabama	0.19470098477700%
AL213	Tarrant City, Alabama	0.09199699544540%
AL214	Thomasville City, Alabama	0.08852500271049%
AL215	Troy City, Alabama	0.32823721378024%
AL216	Trussville City, Alabama	0.24448154995938%
AL217	Tuscaloosa City, Alabama	1.95122494838196%
AL218	Tuscaloosa County, Alabama	1.01248511560961%
AL219	Tuscumbia City, Alabama	0.08432211027618%
AL220	Tuskegee City, Alabama	0.09179124219610%
AL221	Union Springs City, Alabama	0.04230906305776%
AL222	Uniontown, Alabama	0.01814515080219%
AL223	Vance Town, Alabama	0.00962932999198%
AL224	Vernon City, Alabama	0.03170902060019%
AL225	Vestavia Hills City, Alabama	0.30835957321481%
AL226	Walker County, Alabama	1.46359656592768%
AL227	Washington County, Alabama	0.16134379525758%
AL228	Weaver City, Alabama	0.04227639968885%
AL229	West Blocton Town, Alabama	0.04044773805810%
AL243	Wetumpka City, Alabama	0.16601095559654%
AL230	Wilcox County, Alabama	0.08791066513276%
AL231	Winfield City, Alabama	0.19023873350485%
AL233	Woodville Town, Alabama	0.00046128079736%
AL234	Yellow Bluff Town, Alabama	0.00293074188026%
AL243	Attentus Mouton, LLC d/b/a Lawrence Medical Center (Lawrence County Health Care Authority), Alabama	0.14143420563150%

State ID	Qualifying Subdivision	Consolidated State Allocation
AL244	Bibb County Healthcare Authority d/b/a Bibb Medical Center, Alabama	0.52488215603592%
AL245	Cullman Regional Medical Center, Inc. (Healthcare Authority of Cullman County), Alabama	0.43745923357493%
AL246	Dale County Healthcare Authority d/b/a Dale Medical Center, Alabama	0.29945201925755%
AL247	DCH Health Care Authority (Tuscaloosa) d/b/a DCH Regional Medical Center and Northport Medical Center, Alabama	2.03896534839883%
AL248	Decatur Morgan Hospital-Parkway (Health Care Authority of the City of Huntsville), Alabama	0.39470005890361%
AL249	Escambia County Health Care Authority d/b/a D.W. McMillan Memorial Hospital and Atmore Community Hospital, Alabama	0.15477293845133%
AL250	Geneva County Health Care Authority d/b/a Wiregrass Medical Center, Alabama	0.48787124726488%
AL251	Greene County Health System, Alabama	0.30954587690265%
AL252	Health Care Authority of Clarke County d/b/a Grove Hill Memorial Hospital, Alabama	0.10093886866801%
AL253	Health Care Authority of the City of Huntsville d/b/a Huntsville Hospital, Alabama	3.03261217443931%
AL254	Healthcare Authority for Baptist Health, an affiliate of UAB Health System d/b/a Baptist Medical Center East (Montgomery), Alabama	0.61909178627386%
AL255	Healthcare Authority for Baptist Health, an affiliate of UAB Health System d/b/a Baptist Medical Center South (Montgomery), Alabama	1.30211153244469%
AL256	Healthcare Authority for Baptist Health, an affiliate of UAB Health System d/b/a Prattville Baptist Hospital, Alabama	0.18505460879230%

State ID	Qualifying Subdivision	Consolidated State Allocation
AL257	HH Health System-Athens Limestone, LLC d/b/a Athens Limestone Hospital (Healthcare Authority of the City of Huntsville), Alabama	0.21708503564384%
AL258	HH Health System-Morgan, LLC d/b/a Decatur Morgan Hospital Decatur, Alabama	1.08542517821921%
AL259	HH Health Systems-Shoals LLC d/b/a Hellen Keller Hospital (Healthcare Authority of the City of Huntsville), Alabama	0.56573675758889%
AL260	HH Health Systems-Shoals, LLC d/b/a Red Bay Hospital (Healthcare Authority of the City of Huntsville), Alabama	0.08222918705539%
AL261	Jackson County Healthcare Authority, Alabama	0.31247087184822%
AL262	Jefferson County Board of Health, Alabama	3.08543617986526%
AL263	Lakeland Community Hospital HCA Winston County, Alabama	0.19514849890595%
AL264	Marshall County Health Care Authority, Alabama	0.29602506041199%
AL265	Marshall County Health Care Authority, Alabama	0.64138762006979%
AL266	Medical West Hospital Authority (UAB), Alabama	0.83442806540712%
AL267	Mobile County Board of Health, Alabama	1.93445993855628%
AL268	Monroe County Health Care Authority d/b/a Monroe County Hospital, Alabama	0.16486682856498%
AL269	Sylacauga Health Care Authority d/b/a Coosa Valley Medical Center, Alabama	0.47777735715122%
AL270	Tombigbee Health Care Authority d/b/a Brian W. Whitfield Memorial Hospital, Alabama	0.20524238901961%

State ID	Qualifying Subdivision	Consolidated State Allocation
AK1	Anchorage Municipality, Alaska	47.6578000000%
AK2	Fairbanks City, Alaska	5.1226000000%
AK3	Fairbanks North Star Borough, Alaska	10.9627000000%
AK4	Juneau City and Borough, Alaska	5.2324000000%
AK5	Kenai Peninsula Borough, Alaska	9.4922000000%
AK6	Ketchikan Gateway Borough, Alaska	2.2406000000%
AK7	Kodiak Island Borough, Alaska	2.1839000000%
AK8	Matanuska-Susitna Borough, Alaska	15.4726000000%
AK9	Wasilla City, Alaska	1.6351000000%

State ID	Qualifying Subdivision	Consolidated State Allocation
AZ1	Apache County, Arizona	0.3907470000%
AZ2	Apache Junction City, Arizona	0.2201340000%
AZ3	Avondale City, Arizona	0.5677140000%
AZ4	Benson City, Arizona	0.0652960000%
AZ5	Bisbee City, Arizona	0.0643685000%
AZ6	Buckeye City, Arizona	0.2664780000%
AZ7	Bullhead City, Arizona	0.6416380000%
AZ8	Camp Verde Town, Arizona	0.0416227000%
AZ9	Carefree Town, Arizona	0.0231720000%
AZ10	Casa Grande City, Arizona	0.2125144000%
AZ11	Cave Creek Town, Arizona	0.0347580000%
AZ12	Chandler City, Arizona	1.6567980000%
AZ13	Chino Valley Town, Arizona	0.0291788000%
AZ14	Clarkdale Town, Arizona	0.0308952000%
AZ15	Clifton Town, Arizona	0.0102870000%
AZ16	Cochise County, Arizona	1.1773685000%
AZ17	Coconino County, Arizona	1.2011808000%
AZ18	Colorado City Town, Arizona	0.0298778000%
AZ19	Coolidge City, Arizona	0.0644448000%
AZ20	Cottonwood City, Arizona	0.2098299000%
AZ21	Dewey-Humboldt Town, Arizona	0.0660814000%
AZ22	Douglas City, Arizona	0.1565620000%
AZ23	Duncan Town, Arizona	0.0002520000%
AZ24	Eagar Town, Arizona	0.1425540000%
AZ25	El Mirage City, Arizona	0.2259270000%
AZ26	Eloy City, Arizona	1.3418328000%
AZ27	Flagstaff City, Arizona	0.3114360000%
AZ28	Florence Town, Arizona	0.0456484000%
AZ29	Fountain Hills Town, Arizona	0.0984810000%
AZ30	Fredonia Town, Arizona	0.0052328000%
AZ31	Gila Bend Town, Arizona	0.0173790000%
AZ32	Gila County, Arizona	0.7780446000%
AZ33	Gilbert Town, Arizona	0.9906030000%
AZ34	Glendale City, Arizona	1.5235590000%
AZ35	Globe City, Arizona	0.1168266000%
AZ36	Goodyear City, Arizona	0.4402680000%
AZ37	Graham County, Arizona	0.4476494000%
AZ38	Greenlee County, Arizona	0.0794610000%
AZ39	Guadalupe Town, Arizona	0.0000000000%
AZ40	Hayden Town, Arizona	0.0263802000%
AZ41	Holbrook City, Arizona	0.0575625000%
AZ42	Huachuca City Town, Arizona	0.0168805000%
AZ43	Jerome Town, Arizona	0.0012873000%
AZ44	Kearny Town, Arizona	0.0107408000%
AZ45	Kingman City, Arizona	0.4853918000%
AZ46	La Paz County, Arizona	0.2670171000%
AZ47	Lake Havasu City, Arizona	0.6793526000%
AZ48	Litchfield Park City, Arizona	0.0231720000%
AZ49	Mammoth Town, Arizona	0.0061376000%

State ID	Qualifying Subdivision	Consolidated State Allocation
AZ50	Marana Town, Arizona	0.3841282000%
AZ51	Maricopa City, Arizona	0.1047228000%
AZ52	Maricopa County, Arizona	29.8513290000%
AZ53	Mesa City, Arizona	3.5105580000%
AZ54	Miami Town, Arizona	0.0309482000%
AZ55	Mohave County, Arizona	3.0617398000%
AZ56	Navajo County, Arizona	1.0789515000%
AZ57	Nogales City, Arizona	0.0834350000%
AZ58	Oro Valley Town, Arizona	0.3207284000%
AZ59	Page City, Arizona	0.0575608000%
AZ60	Paradise Valley Town, Arizona	0.1969620000%
AZ61	Parker Town, Arizona	0.0156219000%
AZ62	Patagonia Town, Arizona	0.0024790000%
AZ63	Payson Town, Arizona	0.1846614000%
AZ64	Peoria City, Arizona	0.8747430000%
AZ65	Phoenix City, Arizona	12.3275040000%
AZ66	Pima County, Arizona	13.4612693000%
AZ67	Pima Town, Arizona	0.0159618000%
AZ68	Pinal County, Arizona	2.0334636000%
AZ69	Pinetop-Lakeside Town, Arizona	0.0729125000%
AZ70	Prescott City, Arizona	0.5917289000%
AZ71	Prescott Valley Town, Arizona	0.3471419000%
AZ72	Quartzsite Town, Arizona	0.0183911000%
AZ73	Queen Creek Town, Arizona	0.0637230000%
AZ74	Safford City, Arizona	0.1929077000%
AZ75	Sahuarita Town, Arizona	0.1510407000%
AZ76	San Luis City, Arizona	0.0963840000%
AZ77	Santa Cruz County, Arizona	0.2840860000%
AZ78	Scottsdale City, Arizona	2.3114070000%
AZ79	Sedona City, Arizona	0.0690392000%
AZ80	Show Low City, Arizona	0.1441365000%
AZ81	Sierra Vista City, Arizona	0.3084865000%
AZ82	Snowflake Town, Arizona	0.0451290000%
AZ83	Somerton City, Arizona	0.0449792000%
AZ84	South Tucson City, Arizona	0.0578057000%
AZ85	Springerville Town, Arizona	0.0740370000%
AZ86	St. Johns City, Arizona	0.0826620000%
AZ87	Star Valley Town, Arizona	0.0039970000%
AZ88	Superior Town, Arizona	0.0168784000%
AZ89	Surprise City, Arizona	0.5677140000%
AZ90	Taylor Town, Arizona	0.0411380000%
AZ91	Tempe City, Arizona	1.8943110000%
AZ92	Thatcher Town, Arizona	0.0624092000%
AZ93	Tolleson City, Arizona	0.1564110000%
AZ94	Tombstone City, Arizona	0.0215180000%
AZ95	Tucson City, Arizona	4.2720277000%
AZ96	Tusayan Town, Arizona	0.0113096000%
AZ97	Wellton Town, Arizona	0.0122488000%
AZ98	Wickenburg Town, Arizona	0.0579300000%

State ID	Qualifying Subdivision	Consolidated State Allocation
AZ99	Willcox City, Arizona	0.0443345000%
AZ100	Williams City, Arizona	0.0324096000%
AZ101	Winkelman Town, Arizona	0.0011420000%
AZ102	Winslow City, Arizona	0.0950165000%
AZ103	Yavapai County, Arizona	2.9740921000%
AZ104	Youngtown, Arizona	0.0289650000%
AZ105	Yuma City, Arizona	0.5285056000%
AZ106	Yuma County, Arizona	1.3258824000%

State ID	Qualifying Subdivision	Consolidated State Allocation
AR1	Adona City, Arkansas	0.0020790506%
AR2	Alexander City, Arkansas	0.0103476018%
AR3	Alicia Town, Arkansas	0.0002309579%
AR4	Allport Town, Arkansas	0.0026587350%
AR5	Alma City, Arkansas	0.1875236673%
AR6	Almyra Town, Arkansas	0.0010881066%
AR7	Alpena Town, Arkansas	0.0141319347%
AR8	Altheimer City, Arkansas	0.0071081808%
AR9	Altus City, Arkansas	0.0161149675%
AR10	Amagon Town, Arkansas	0.0016587759%
AR11	Amity City, Arkansas	0.0105947297%
AR12	Anthonyville Town, Arkansas	0.0010978372%
AR13	Antoine Town, Arkansas	0.0010576270%
AR14	Arkadelphia City, Arkansas	0.2710593166%
AR15	Arkansas City, Arkansas	0.0026365550%
AR16	Arkansas County, Arkansas	0.2272004928%
AR17	Ash Flat City, Arkansas	0.0560964456%
AR18	Ashdown City, Arkansas	0.0210645360%
AR19	Ashley County, Arkansas	0.3024558569%
AR20	Atkins City, Arkansas	0.0507540769%
AR21	Aubrey Town, Arkansas	0.0021166850%
AR22	Augusta City, Arkansas	0.0134645321%
AR23	Austin City, Arkansas	0.0201747613%
AR24	Avoca Town, Arkansas	0.0030227727%
AR25	Bald Knob City, Arkansas	0.1048227005%
AR26	Banks Town, Arkansas	0.0006822846%
AR27	Barling City, Arkansas	0.1588678563%
AR28	Bassett Town, Arkansas	0.0011499243%
AR29	Batesville City, Arkansas	0.1318965785%
AR30	Bauxite Town, Arkansas	0.0049816222%
AR31	Baxter County, Arkansas	0.8690235470%
AR32	Bay City, Arkansas	0.0250493472%
AR33	Bearden City, Arkansas	0.0161101022%
AR34	Beaver Town, Arkansas	0.0051365958%
AR35	Beebe City, Arkansas	0.2412092213%
AR36	Beedeville Town, Arkansas	0.0018030172%
AR37	Bella Vista City, Arkansas	0.5136648745%
AR38	Bellefonte Town, Arkansas	0.0008435545%
AR39	Belleville City, Arkansas	0.0050880860%
AR40	Ben Lomond Town, Arkansas	0.0012499489%
AR41	Benton City, Arkansas	1.3762616667%
AR42	Benton County, Arkansas	1.9493524156%
AR43	Bentonville City, Arkansas	1.3212148347%
AR44	Bergman Town, Arkansas	0.0080191338%
AR45	Berryville City, Arkansas	0.1767673815%
AR47	Big Flat Town, Arkansas	0.0005552148%
AR48	Bigelow Town, Arkansas	0.0028351731%
AR49	Biggers Town, Arkansas	0.0002571446%
AR50	Birdsong Town, Arkansas	0.0001210597%

State ID	Qualifying Subdivision	Consolidated State Allocation
AR51	Black Oak Town, Arkansas	0.0003079439%
AR52	Black Rock City, Arkansas	0.0020552966%
AR53	Black Springs Town, Arkansas	0.0007714338%
AR54	Blevins City, Arkansas	0.0042289340%
AR55	Blue Eye Town, Arkansas	0.0007084713%
AR56	Blue Mountain Town, Arkansas	0.0023457827%
AR57	Bluff City Town, Arkansas	0.0001956131%
AR58	Blytheville City, Arkansas	0.3444881956%
AR59	Bodcaw Town, Arkansas	0.0004892473%
AR60	Bonanza City, Arkansas	0.0271534397%
AR61	Bono City, Arkansas	0.0166311169%
AR62	Boone County, Arkansas	0.6844345049%
AR63	Booneville City, Arkansas	0.2395670446%
AR64	Bradford City, Arkansas	0.0196136795%
AR65	Bradley City, Arkansas	0.0127167093%
AR66	Bradley County, Arkansas	0.0903557767%
AR67	Branch City, Arkansas	0.0001595527%
AR68	Briarcliff City, Arkansas	0.0001841653%
AR69	Brinkley City, Arkansas	0.0788794288%
AR70	Brookland City, Arkansas	0.0336729211%
AR71	Bryant City, Arkansas	1.0536173112%
AR72	Buckner City, Arkansas	0.0065180504%
AR73	Bull Shoals City, Arkansas	0.0692543217%
AR74	Burdette Town, Arkansas	0.0001210597%
AR75	Cabot City, Arkansas	0.9626014299%
AR76	Caddo Valley Town, Arkansas	0.0447599031%
AR77	Caldwell Town, Arkansas	0.0042239256%
AR78	Cale Town, Arkansas	0.0007827384%
AR79	Calhoun County, Arkansas	0.1397959405%
AR80	Calico Rock City, Arkansas	0.0024459503%
AR81	Calion City, Arkansas	0.0029361993%
AR82	Camden City, Arkansas	0.4098542963%
AR83	Cammack Village City, Arkansas	0.0112054660%
AR84	Campbell Station City, Arkansas	0.0043090681%
AR85	Caraway City, Arkansas	0.0225855098%
AR86	Carlisle City, Arkansas	0.1468534652%
AR87	Carroll County, Arkansas	0.5928260605%
AR88	Carthage City, Arkansas	0.0016610654%
AR89	Casa Town, Arkansas	0.0015121018%
AR90	Cash Town, Arkansas	0.0012319187%
AR91	Caulksville Town, Arkansas	0.0006928738%
AR92	Cave City, Arkansas	0.0850463202%
AR93	Cave Springs City, Arkansas	0.0320796835%
AR94	Cedarville City, Arkansas	0.0178802072%
AR95	Centerton City, Arkansas	0.1131077079%
AR96	Central City Town, Arkansas	0.0174268772%
AR97	Charleston City, Arkansas	0.0410054775%
AR98	Cherokee Village City, Arkansas	0.2125413902%
AR99	Cherry Valley City, Arkansas	0.0081466329%

State ID	Qualifying Subdivision	Consolidated State Allocation
AR100	Chester Town, Arkansas	0.0004361585%
AR101	Chicot County, Arkansas	0.2832352637%
AR102	Chidester City, Arkansas	0.0007419559%
AR103	Clarendon City, Arkansas	0.0270484068%
AR104	Clark County, Arkansas	0.3342708117%
AR105	Clarksville City, Arkansas	0.2458837581%
AR106	Clay County, Arkansas	0.0479674136%
AR107	Cleburne County, Arkansas	0.3503158049%
AR108	Cleveland County, Arkansas	0.1143679597%
AR109	Clinton City, Arkansas	0.0824034689%
AR110	Coal Hill City, Arkansas	0.1328713526%
AR111	Colt City, Arkansas	0.0085205444%
AR112	Columbia County, Arkansas	0.0671663991%
AR113	Concord Town, Arkansas	0.0150785188%
AR114	Conway City, Arkansas	2.0922743015%
AR115	Conway County, Arkansas	0.5138971203%
AR116	Corning City, Arkansas	0.0191809554%
AR117	Cotter City, Arkansas	0.0233925747%
AR118	Cotton Plant City, Arkansas	0.0024986099%
AR119	Cove Town, Arkansas	0.0001777260%
AR120	Coy Town, Arkansas	0.0078196572%
AR121	Craighead County, Arkansas	0.9265189050%
AR122	Crawford County, Arkansas	0.9565887967%
AR123	Crawfordsville Town, Arkansas	0.0037229444%
AR124	Crittenden County, Arkansas	0.4864689351%
AR125	Cross County, Arkansas	0.3114968436%
AR126	Crossett City, Arkansas	0.2482926464%
AR127	Cushman City, Arkansas	0.0031235127%
AR128	Daisy Town, Arkansas	0.0019036142%
AR129	Dallas County, Arkansas	0.1170103816%
AR130	Damascus Town, Arkansas	0.0328833141%
AR131	Danville City, Arkansas	0.0554598088%
AR132	Dardanelle City, Arkansas	0.1270318663%
AR133	Datto Town, Arkansas	0.0002041989%
AR134	De Queen City, Arkansas	0.1825177187%
AR135	De Valls Bluff City, Arkansas	0.0153369512%
AR136	Decatur City, Arkansas	0.0461206088%
AR137	Delaplaine Town, Arkansas	0.0012409338%
AR138	Delight City, Arkansas	0.0019036142%
AR139	Dell Town, Arkansas	0.0049627334%
AR140	Denning Town, Arkansas	0.0066893371%
AR141	Dermott City, Arkansas	0.0098811069%
AR142	Des Arc City, Arkansas	0.0461902968%
AR143	Desha County, Arkansas	0.1880442527%
AR144	Dewitt City, Arkansas	0.0561472449%
AR145	Diamond City, Arkansas	0.0067481498%
AR146	Diaz City, Arkansas	0.0144799456%
AR147	Dierks City, Arkansas	0.0109843817%
AR148	Donaldson Town, Arkansas	0.0097288521%

State ID	Qualifying Subdivision	Consolidated State Allocation
AR149	Dover City, Arkansas	0.0357561215%
AR150	Drew County, Arkansas	0.4314342663%
AR151	Dumas City, Arkansas	0.0345209116%
AR152	Dyer City, Arkansas	0.0039248537%
AR153	Dyess Town, Arkansas	0.0004842389%
AR154	Earle City, Arkansas	0.0169920066%
AR155	East Camden Town, Arkansas	0.0077825952%
AR156	Edmondson Town, Arkansas	0.0080664988%
AR157	Egypt Town, Arkansas	0.0007186312%
AR158	El Dorado City, Arkansas	0.7549722601%
AR159	Elaine City, Arkansas	0.0061272536%
AR160	Elkins City, Arkansas	0.0584820092%
AR161	Elm Springs City, Arkansas	0.0169270407%
AR162	Emerson Town, Arkansas	0.0007712907%
AR163	Emmet City, Arkansas	0.0006732695%
AR164	England City, Arkansas	0.1277733929%
AR165	Enola Town, Arkansas	0.0166283981%
AR166	Etowah Town, Arkansas	0.0016945500%
AR167	Eudora City, Arkansas	0.0090127967%
AR168	Eureka Springs City, Arkansas	0.3891361972%
AR169	Evening Shade City, Arkansas	0.0112877465%
AR170	Everton Town, Arkansas	0.0023825585%
AR171	Fairfield Bay City, Arkansas	0.0994183710%
AR172	Fargo Town, Arkansas	0.0003540210%
AR173	Farmington City, Arkansas	0.0908450240%
AR174	Faulkner County, Arkansas	1.0072116540%
AR175	Fayetteville City, Arkansas	2.1103658624%
AR176	Felsenthal Town, Arkansas	0.0017181610%
AR177	Fifty-Six City, Arkansas	0.0004614866%
AR178	Fisher City, Arkansas	0.0019605666%
AR179	Flippin City, Arkansas	0.0956901320%
AR180	Fordyce City, Arkansas	0.0545063561%
AR181	Foreman City, Arkansas	0.0020583016%
AR182	Forrest City, Arkansas	0.2961090931%
AR183	Fort Smith City, Arkansas	3.8434930088%
AR184	Fouke City, Arkansas	0.0054372418%
AR185	Fountain Hill Town, Arkansas	0.0007150537%
AR186	Fountain Lake Town, Arkansas	0.0028270166%
AR187	Fourche Town, Arkansas	0.0009659021%
AR188	Franklin County, Arkansas	0.5981687154%
AR189	Franklin Town, Arkansas	0.0147063245%
AR190	Fredonia (Biscoe) Town, Arkansas	0.0078030580%
AR191	Friendship Town, Arkansas	0.0051302995%
AR192	Fulton County, Arkansas	0.4958178657%
AR193	Fulton Town, Arkansas	0.0066352466%
AR194	Garfield Town, Arkansas	0.0074476060%
AR195	Garland County, Arkansas	1.7334588443%
AR196	Garland Town, Arkansas	0.0002891982%
AR197	Garner Town, Arkansas	0.0077934705%

State ID	Qualifying Subdivision	Consolidated State Allocation
AR198	Gassville City, Arkansas	0.0727563250%
AR199	Gateway Town, Arkansas	0.0062878080%
AR200	Gentry City, Arkansas	0.0904861377%
AR201	Georgetown, Arkansas	0.0040265954%
AR202	Gilbert Town, Arkansas	0.0024831554%
AR203	Gillett City, Arkansas	0.0114616089%
AR204	Gillham Town, Arkansas	0.0013801668%
AR205	Gilmore City, Arkansas	0.0000954454%
AR206	Glenwood City, Arkansas	0.0480021861%
AR207	Goshen Town, Arkansas	0.0031660124%
AR208	Gosnell City, Arkansas	0.0272347186%
AR209	Gould City, Arkansas	0.0171248002%
AR210	Grady City, Arkansas	0.0313103962%
AR211	Grannis City, Arkansas	0.0009242610%
AR212	Grant County, Arkansas	0.2664481715%
AR213	Gravette City, Arkansas	0.0803454535%
AR214	Green Forest City, Arkansas	0.1176088116%
AR215	Greenbrier City, Arkansas	0.0720066419%
AR216	Greene County, Arkansas	0.5298528213%
AR217	Greenland City, Arkansas	0.0237445924%
AR218	Greenway City, Arkansas	0.0004757962%
AR219	Greenwood City, Arkansas	0.2310067194%
AR220	Greers Ferry City, Arkansas	0.0499860774%
AR221	Griffithville Town, Arkansas	0.0045461792%
AR222	Grubbs City, Arkansas	0.0056885194%
AR223	Guion Town, Arkansas	0.0188333737%
AR224	Gum Springs Town, Arkansas	0.0030512489%
AR225	Gurdon City, Arkansas	0.0633258293%
AR226	Guy City, Arkansas	0.0155481618%
AR227	Hackett City, Arkansas	0.0171567108%
AR228	Hamburg City, Arkansas	0.0524650830%
AR229	Hampton City, Arkansas	0.0149258347%
AR230	Hardy City, Arkansas	0.0225704847%
AR231	Harrell Town, Arkansas	0.0015608978%
AR232	Harrisburg City, Arkansas	0.0610374284%
AR233	Harrison City, Arkansas	0.7509041666%
AR234	Hartford City, Arkansas	0.0079703379%
AR235	Hartman City, Arkansas	0.0041808536%
AR236	Haskell City, Arkansas	0.0719017520%
AR237	Hatfield Town, Arkansas	0.0003119506%
AR238	Havana City, Arkansas	0.0028832535%
AR239	Haynes Town, Arkansas	0.0021807923%
AR240	Hazen City, Arkansas	0.0648458015%
AR241	Heber Springs City, Arkansas	0.3767547633%
AR242	Hector Town, Arkansas	0.0046732490%
AR243	Helena-West Helena City, Arkansas	0.1739214762%
AR244	Hempstead County, Arkansas	0.2734659153%
AR245	Hermitage City, Arkansas	0.0121839606%

State ID	Qualifying Subdivision	Consolidated State Allocation
AR246	Hickory Ridge City, Arkansas	0.0037770349%
AR247	Higden Town, Arkansas	0.0085654767%
AR248	Higginson Town, Arkansas	0.0151972889%
AR249	Highfill Town, Arkansas	0.0156011076%
AR250	Highland City, Arkansas	0.0298718460%
AR251	Hindsville Town, Arkansas	0.0033816590%
AR252	Holland City, Arkansas	0.0148864831%
AR253	Holly Grove City, Arkansas	0.0044608936%
AR254	Hope City, Arkansas	0.2248866206%
AR255	Horatio City, Arkansas	0.0029417800%
AR256	Horseshoe Bend City, Arkansas	0.1112109623%
AR257	Horseshoe Lake Town, Arkansas	0.0014319677%
AR258	Hot Spring County, Arkansas	0.4782149797%
AR259	Hot Springs City, Arkansas	3.5617977507%
AR260	Houston Town, Arkansas	0.0052922849%
AR261	Howard County, Arkansas	0.1730249760%
AR262	Hoxie City, Arkansas	0.0120318489%
AR263	Hughes City, Arkansas	0.0113608689%
AR264	Humnoke City, Arkansas	0.0148176536%
AR265	Humphrey City, Arkansas	0.0142685920%
AR266	Hunter Town, Arkansas	0.0001735762%
AR267	Huntington City, Arkansas	0.0062142563%
AR268	Huntsville City, Arkansas	0.0854508543%
AR269	Huttig City, Arkansas	0.0090756161%
AR270	Imboden Town, Arkansas	0.0007621325%
AR271	Independence County, Arkansas	1.0893020276%
AR272	Izard County, Arkansas	0.5513048629%
AR273	Jackson County, Arkansas	0.1817241049%
AR274	Jacksonport Town, Arkansas	0.0050680525%
AR275	Jacksonville City, Arkansas	2.6389305280%
AR276	Jasper City, Arkansas	0.0070526594%
AR277	Jefferson County, Arkansas	0.5992841535%
AR278	Jennette Town, Arkansas	0.0012409338%
AR279	Jericho Town, Arkansas	0.0009641849%
AR281	Johnson City, Arkansas	0.1307711237%
AR282	Johnson County, Arkansas	0.3131687844%
AR283	Joiner City, Arkansas	0.0294738943%
AR284	Jonesboro City, Arkansas	2.1740597362%
AR285	Judsonia City, Arkansas	0.0470208295%
AR286	Junction City, Arkansas	0.0041819983%
AR287	Keiser City, Arkansas	0.0065363668%
AR288	Kensett City, Arkansas	0.0362397881%
AR289	Kibler City, Arkansas	0.0431741065%
AR290	Kingsland City, Arkansas	0.0062036672%
AR291	Knobel City, Arkansas	0.0009218283%
AR292	Knoxville Town, Arkansas	0.0058832739%
AR293	Lafayette County, Arkansas	0.0910619584%
AR294	Lafe Town, Arkansas	0.0028363178%
AR295	Lagrange Town, Arkansas	0.0008239503%

State ID	Qualifying Subdivision	Consolidated State Allocation
AR296	Lake City, Arkansas	0.0259733220%
AR297	Lake View City, Arkansas	0.0047133160%
AR298	Lake Village City, Arkansas	0.0224886334%
AR299	Lakeview City, Arkansas	0.0193402219%
AR300	Lamar City, Arkansas	0.1021685446%
AR301	Lavaca City, Arkansas	0.0302604964%
AR302	Lawrence County, Arkansas	0.4807663922%
AR303	Leachville City, Arkansas	0.0232401768%
AR304	Lead Hill Town, Arkansas	0.0069168607%
AR305	Lee County, Arkansas	0.0989039387%
AR306	Leola Town, Arkansas	0.0013687190%
AR307	Lepanto City, Arkansas	0.0682260295%
AR308	Leslie City, Arkansas	0.0254444370%
AR309	Lewisville City, Arkansas	0.0166148039%
AR310	Lincoln City, Arkansas	0.0464338472%
AR311	Lincoln County, Arkansas	0.1387881111%
AR312	Little Flock City, Arkansas	0.0530723850%
AR313	Little River County, Arkansas	0.3040825791%
AR314	Little Rock City, Arkansas	6.7135694892%
AR315	Lockesburg City, Arkansas	0.0062672021%
AR316	Logan County, Arkansas	0.5058103018%
AR317	London City, Arkansas	0.0142372538%
AR318	Lonoke City, Arkansas	0.2452247983%
AR319	Lonoke County, Arkansas	0.5819398431%
AR320	Louann Town, Arkansas	0.0002119261%
AR321	Luxora City, Arkansas	0.0119226662%
AR322	Lynn Town, Arkansas	0.0001385175%
AR323	Madison City, Arkansas	0.0058260353%
AR324	Madison County, Arkansas	0.3196927018%
AR325	Magazine City, Arkansas	0.0318730520%
AR326	Magness Town, Arkansas	0.0014179443%
AR327	Magnolia City, Arkansas	0.5824169272%
AR328	Malvern City, Arkansas	0.3835695961%
AR329	Mammoth Spring City, Arkansas	0.0072408314%
AR330	Manila City, Arkansas	0.0409124647%
AR331	Mansfield City, Arkansas	0.0007997669%
AR332	Marianna City, Arkansas	0.0846648246%
AR333	Marie Town, Arkansas	0.0009849339%
AR334	Marion City, Arkansas	0.1126915829%
AR335	Marion County, Arkansas	0.3952336867%
AR336	Marked Tree City, Arkansas	0.0992021520%
AR337	Marmaduke City, Arkansas	0.0391761304%
AR338	Marvell City, Arkansas	0.0610375715%
AR339	Maumelle City, Arkansas	0.2572012688%
AR340	Mayflower City, Arkansas	0.0608694329%
AR341	Maynard Town, Arkansas	0.0013140561%
AR342	McCaskill Town, Arkansas	0.0012894435%
AR343	McCrory City, Arkansas	0.0147483949%
AR344	McDougal Town, Arkansas	0.0001189133%

State ID	Qualifying Subdivision	Consolidated State Allocation
AR345	McGehee City, Arkansas	0.0429993856%
AR346	McNab Town, Arkansas	0.0009151028%
AR347	Mcrae City, Arkansas	0.0307843730%
AR348	Melbourne City, Arkansas	0.0687295865%
AR349	Mena City, Arkansas	0.7716866592%
AR350	Menifee Town, Arkansas	0.0106144770%
AR351	Midland Town, Arkansas	0.0002701664%
AR352	Miller County, Arkansas	0.3769094507%
AR353	Mineral Springs City, Arkansas	0.0133569235%
AR354	Minturn Town, Arkansas	0.0002323889%
AR355	Mississippi County, Arkansas	0.4561503415%
AR356	Mitchellville City, Arkansas	0.0000190318%
AR357	Monette City, Arkansas	0.0230987974%
AR358	Monroe County, Arkansas	0.0751267203%
AR359	Montgomery County, Arkansas	0.2264091685%
AR360	Monticello City, Arkansas	0.0526747196%
AR361	Montrose City, Arkansas	0.0059883068%
AR362	Moorefield Town, Arkansas	0.0009616092%
AR363	Moro Town, Arkansas	0.0019858947%
AR364	Morrilton City, Arkansas	0.2597150469%
AR365	Morrison Bluff Town, Arkansas	0.0001732900%
AR366	Mount Ida City, Arkansas	0.0133550632%
AR367	Mount Pleasant Town, Arkansas	0.0122294653%
AR368	Mount Vernon Town, Arkansas	0.0071675659%
AR369	Mountain Home City, Arkansas	0.8447100025%
AR370	Mountain Pine City, Arkansas	0.0111311989%
AR371	Mountainburg City, Arkansas	0.0505877986%
AR372	Mulberry City, Arkansas	0.0839496278%
AR373	Murfreesboro City, Arkansas	0.0401878235%
AR374	Nashville City, Arkansas	0.1174004630%
AR375	Nevada County, Arkansas	0.1042972498%
AR376	Newark City, Arkansas	0.0743959259%
AR377	Newport City, Arkansas	0.2957024125%
AR378	Newton County, Arkansas	0.2538955941%
AR379	Norfork City, Arkansas	0.0071735760%
AR380	Norman Town, Arkansas	0.0054255078%
AR381	Norphlet City, Arkansas	0.0199309247%
AR382	North Little Rock City, Arkansas	1.6145764729%
AR383	Oak Grove Heights Town, Arkansas	0.0108133813%
AR384	Oak Grove Town, Arkansas	0.0031881924%
AR385	Oakhaven Town, Arkansas	0.0008458440%
AR386	Oden Town, Arkansas	0.0002086349%
AR387	Ogden City, Arkansas	0.0000829960%
AR388	Oil Trough Town, Arkansas	0.0018456600%
AR389	O'Kean Town, Arkansas	0.0001714297%
AR390	Okolona Town, Arkansas	0.0019046158%
AR391	Ola City, Arkansas	0.0262882776%
AR392	Omaha Town, Arkansas	0.0030405167%

State ID	Qualifying Subdivision	Consolidated State Allocation
AR393	Oppelo City, Arkansas	0.0090335457%
AR394	Osceola City, Arkansas	0.2492878833%
AR395	Ouachita County, Arkansas	0.2913601460%
AR396	Oxford City, Arkansas	0.0264156336%
AR397	Ozan Town, Arkansas	0.0011369025%
AR398	Ozark City, Arkansas	0.1131238778%
AR399	Palestine City, Arkansas	0.0190803585%
AR400	Pangburn City, Arkansas	0.0157168727%
AR401	Paragould City, Arkansas	1.0056390223%
AR402	Paris City, Arkansas	0.1616167421%
AR403	Parkdale City, Arkansas	0.0007150537%
AR404	Parkin City, Arkansas	0.0145157198%
AR405	Patmos Town, Arkansas	0.0012638292%
AR406	Patterson City, Arkansas	0.0019780244%
AR407	Pea Ridge City, Arkansas	0.1099874863%
AR408	Peach Orchard City, Arkansas	0.0002743162%
AR409	Perla Town, Arkansas	0.0015089537%
AR410	Perry County, Arkansas	0.2411764522%
AR411	Perry Town, Arkansas	0.0054813155%
AR412	Perrytown, Arkansas	0.0014218079%
AR413	Perryville City, Arkansas	0.0413931262%
AR414	Phillips County, Arkansas	0.3245121955%
AR415	Piggott City, Arkansas	0.3895380125%
AR416	Pike County, Arkansas	0.3481536152%
AR417	Pindall Town, Arkansas	0.0030350790%
AR418	Pine Bluff City, Arkansas	0.9840818047%
AR419	Pineville Town, Arkansas	0.0022012551%
AR420	Plainview City, Arkansas	0.0125505741%
AR421	Pleasant Plains Town, Arkansas	0.0024498139%
AR422	Plumerville City, Arkansas	0.0292462276%
AR423	Pocahontas City, Arkansas	0.4671181241%
AR424	Poinsett County, Arkansas	0.4009911787%
AR425	Polk County, Arkansas	0.0691418478%
AR426	Pollard City, Arkansas	0.0004521853%
AR427	Pope County, Arkansas	0.8568421621%
AR428	Portia Town, Arkansas	0.0009455824%
AR429	Portland City, Arkansas	0.0081334680%
AR430	Pottsville City, Arkansas	0.0356473681%
AR431	Powhatan Town, Arkansas	0.0001556891%
AR432	Poyen Town, Arkansas	0.0022812461%
AR433	Prairie County, Arkansas	0.0903177130%
AR434	Prairie Grove City, Arkansas	0.0877670159%
AR435	Prattsville Town, Arkansas	0.0011406231%
AR436	Prescott City, Arkansas	0.0925564594%
AR437	Pulaski County, Arkansas	2.3536109191%
AR438	Pyatt Town, Arkansas	0.0061435666%
AR439	Quitman City, Arkansas	0.0720876345%
AR440	Randolph County, Arkansas	0.0533049170%
AR441	Ratcliff City, Arkansas	0.0038192484%

State ID	Qualifying Subdivision	Consolidated State Allocation
AR442	Ravenden Springs Town, Arkansas	0.0001143342%
AR443	Ravenden Town, Arkansas	0.0021246984%
AR444	Rector City, Arkansas	0.0056501695%
AR445	Redfield City, Arkansas	0.0199888788%
AR446	Reed Town, Arkansas	0.0009294125%
AR447	Reyno City, Arkansas	0.0001714297%
AR448	Rison City, Arkansas	0.0266158258%
AR449	Rockport City, Arkansas	0.0466258829%
AR450	Roe Town, Arkansas	0.0006297682%
AR451	Rogers City, Arkansas	1.7409808606%
AR452	Rondo Town, Arkansas	0.0001282146%
AR453	Rose Bud Town, Arkansas	0.0201332633%
AR454	Rosston Town, Arkansas	0.0012719857%
AR455	Rudy Town, Arkansas	0.0043610122%
AR456	Russell Town, Arkansas	0.0072738867%
AR457	Russellville City, Arkansas	0.9171601007%
AR458	Salem City, Arkansas	0.0044962385%
AR459	Salesville City, Arkansas	0.0064404921%
AR460	Saline County, Arkansas	1.0800200662%
AR461	Scott County, Arkansas	0.3380405487%
AR462	Scranton City, Arkansas	0.0072753177%
AR463	Searcy City, Arkansas	0.9880873649%
AR464	Searcy County, Arkansas	0.2116252857%
AR465	Sebastian County, Arkansas	2.1934833834%
AR466	Sedgwick Town, Arkansas	0.0005311746%
AR467	Sevier County, Arkansas	0.2613059949%
AR468	Shannon Hills City, Arkansas	0.0498163648%
AR469	Sharp County, Arkansas	0.2811885530%
AR470	Sheridan City, Arkansas	0.2276671308%
AR471	Sherrill Town, Arkansas	0.0025761682%
AR472	Sherwood City, Arkansas	0.4241829888%
AR473	Shirley Town, Arkansas	0.0009145304%
AR474	Sidney Town, Arkansas	0.0035774152%
AR475	Siloam Springs City, Arkansas	0.7477783644%
AR476	Smackover City, Arkansas	0.0008007686%
AR477	Smithville Town, Arkansas	0.0001624146%
AR478	South Lead Hill Town, Arkansas	0.0018313504%
AR479	Sparkman City, Arkansas	0.0035065824%
AR480	Springdale City, Arkansas	2.0136786333%
AR481	Springtown, Arkansas	0.0002924895%
AR482	St Francis County, Arkansas	0.2044215163%
AR483	St. Charles Town, Arkansas	0.0024664131%
AR484	St. Francis City, Arkansas	0.0007137659%
AR485	St. Joe Town, Arkansas	0.0076757020%
AR486	St. Paul Town, Arkansas	0.0041619648%
AR487	Stamps City, Arkansas	0.0180207281%
AR488	Star City, Arkansas	0.0564865270%
AR489	Stephens City, Arkansas	0.0116586529%

State ID	Qualifying Subdivision	Consolidated State Allocation
AR490	Stone County, Arkansas	0.2837768844%
AR491	Strawberry Town, Arkansas	0.0006928738%
AR492	Strong City, Arkansas	0.0029361993%
AR493	Stuttgart City, Arkansas	0.2203815101%
AR494	Subiaco Town, Arkansas	0.0109146937%
AR495	Success Town, Arkansas	0.0001784415%
AR496	Sulphur Rock Town, Arkansas	0.0032654646%
AR497	Sulphur Springs City, Arkansas	0.0120908047%
AR498	Summit City, Arkansas	0.0074467474%
AR499	Sunset Town, Arkansas	0.0016041130%
AR500	Swifton City, Arkansas	0.0178930859%
AR501	Taylor City, Arkansas	0.0014103602%
AR502	Texarkana City, Arkansas	0.7683955804%
AR503	Thornton City, Arkansas	0.0022437548%
AR504	Tillar City, Arkansas	0.0003265465%
AR505	Tinsman Town, Arkansas	0.0003150987%
AR506	Tollette Town, Arkansas	0.0032731918%
AR507	Tontitown City, Arkansas	0.0610355681%
AR508	Traskwood City, Arkansas	0.0177678764%
AR509	Trumann City, Arkansas	0.2319945153%
AR510	Tuckerman City, Arkansas	0.0405439909%
AR511	Tull Town, Arkansas	0.0030797252%
AR512	Tupelo Town, Arkansas	0.0005171511%
AR513	Turrell City, Arkansas	0.0090687475%
AR514	Twin Groves Town, Arkansas	0.0156102657%
AR515	Tyronza City, Arkansas	0.0382955139%
AR516	Ulm Town, Arkansas	0.0000897216%
AR517	Union County, Arkansas	0.4520045466%
AR518	Valley Springs Town, Arkansas	0.0032716177%
AR519	Van Buren City, Arkansas	1.7649031789%
AR520	Van Buren County, Arkansas	0.3641848711%
AR521	Vandervoort Town, Arkansas	0.0000659675%
AR522	Victoria Town, Arkansas	0.0005446257%
AR523	Vilonia City, Arkansas	0.1035441323%
AR524	Viola Town, Arkansas	0.0032700437%
AR525	Wabbaseka Town, Arkansas	0.0082530968%
AR526	Waldenburg Town, Arkansas	0.0023526513%
AR527	Waldo City, Arkansas	0.0028426141%
AR528	Waldron City, Arkansas	0.1501465474%
AR529	Walnut Ridge City, Arkansas	0.0315460763%
AR530	Ward City, Arkansas	0.1482609634%
AR531	Warren City, Arkansas	0.1331456688%
AR532	Washington City, Arkansas	0.0014218079%
AR533	Washington County, Arkansas	2.0141562897%
AR534	Watson City, Arkansas	0.0000569524%
AR535	Weiner City, Arkansas	0.0115016760%
AR536	Weldon Town, Arkansas	0.0015514534%
AR537	West Fork City, Arkansas	0.0278779379%
AR538	West Memphis City, Arkansas	0.6402086383%

State ID	Qualifying Subdivision	Consolidated State Allocation
AR539	West Point Town, Arkansas	0.0031173596%
AR540	Western Grove Town, Arkansas	0.0057204300%
AR541	Wheatley City, Arkansas	0.0050976735%
AR542	Whelen Springs Town, Arkansas	0.0002381128%
AR543	White County, Arkansas	0.9979591705%
AR544	White Hall City, Arkansas	0.0551959387%
AR545	Wickes Town, Arkansas	0.0001422380%
AR546	Widener Town, Arkansas	0.0014565804%
AR547	Wiederkehr Village City, Arkansas	0.0015955272%
AR548	Williford Town, Arkansas	0.0025041906%
AR549	Willisville Town, Arkansas	0.0003913692%
AR550	Wilmar City, Arkansas	0.0018078825%
AR551	Wilmot City, Arkansas	0.0171605744%
AR552	Wilson City, Arkansas	0.0038733390%
AR553	Wilton City, Arkansas	0.0002323889%
AR554	Winchester Town, Arkansas	0.0011094280%
AR555	Winslow City, Arkansas	0.0059329284%
AR556	Winthrop City, Arkansas	0.0004315794%
AR557	Woodruff County, Arkansas	0.2136270641%
AR558	Wooster Town, Arkansas	0.0052930004%
AR559	Wrightsville City, Arkansas	0.0089014675%
AR560	Wynne City, Arkansas	0.1541190523%
AR561	Yell County, Arkansas	0.5032932325%
AR562	Yellville City, Arkansas	0.0268081476%
AR563	Zinc Town, Arkansas	0.0018492375%
AR564	Keo Town, Arkansas	0.0137063654%
AR565	Letona Town, Arkansas	0.0096119422%
AR567	Lexa Town, Arkansas	0.0073056542%
AR568	Lonsdale Town, Arkansas	0.0009432928%
AR569	Lowell City, Arkansas	0.2449366017%
AR570	Marshall City, Arkansas	0.0391797079%
AR571	McNeil City, Arkansas	0.0006390694%
AR572	Mountain View City, Arkansas	0.1444262605%
AR573	Nimmons Town, Arkansas	0.0001405209%

State ID	Qualifying Subdivision	Consolidated State Allocation
CA1	Adelanto City, California	
CA2	Agoura Hills City, California	
CA3	Alameda City, California	
CA4	Alameda County, California	
CA5	Albany City, California	
CA6	Alhambra City, California	
CA7	Aliso Viejo City, California	
CA9	Amador County, California	
CA10	American Canyon City, California	
CA11	Anaheim City, California	
CA12	Anderson City, California	
CA13	Antioch City, California	
CA14	Apple Valley Town, California	
CA15	Arcadia City, California	
CA16	Arcata City, California	
CA17	Arroyo Grande City, California	
CA18	Artesia City, California	
CA19	Arvin City, California	
CA20	Atascadero City, California	
CA21	Atwater City, California	
CA22	Auburn City, California	
CA23	Avenal City, California	Allocations in California will be made in accordance with the California State-Subdivision Agreement.
CA24	Azusa City, California	
CA25	Bakersfield City, California	
CA26	Baldwin Park City, California	
CA27	Banning City, California	
CA28	Barstow City, California	
CA29	Beaumont City, California	
CA30	Bell City, California	
CA31	Bell Gardens City, California	
CA32	Bellflower City, California	
CA33	Belmont City, California	
CA34	Benicia City, California	
CA35	Berkeley City, California	
CA36	Beverly Hills City, California	
CA37	Blythe City, California	
CA38	Brawley City, California	
CA39	Brea City, California	
CA40	Brentwood City, California	
CA41	Buena Park City, California	
CA42	Burbank City, California	
CA43	Burlingame City, California	
CA44	Butte County, California	
CA45	Calabasas City, California	
CA46	Calaveras County, California	
CA47	Calexico City, California	
CA48	California City, California	

State ID	Qualifying Subdivision	Consolidated State Allocation
CA49	Camarillo City, California	
CA50	Campbell City, California	
CA51	Canyon Lake City, California	
CA52	Capitola City, California	
CA53	Carlsbad City, California	
CA54	Carpinteria City, California	
CA55	Carson City, California	
CA56	Cathedral City, California	
CA57	Ceres City, California	
CA58	Cerritos City, California	
CA59	Chico City, California	
CA60	Chino City, California	
CA61	Chino Hills City, California	
CA62	Chowchilla City, California	
CA63	Chula Vista City, California	
CA64	Citrus Heights City, California	
CA65	Claremont City, California	
CA66	Clayton City, California	
CA67	Clearlake City, California	
CA68	Clovis City, California	
CA69	Coachella City, California	
CA70	Coalinga City, California	Allocations in California will be made in accordance with the California State-Subdivision Agreement.
CA71	Colton City, California	
CA72	Colusa County, California	
CA73	Commerce City, California	
CA74	Compton City, California	
CA75	Concord City, California	
CA76	Contra Costa County, California	
CA77	Corcoran City, California	
CA78	Corona City, California	
CA79	Coronado City, California	
CA80	Costa Mesa City, California	
CA81	Covina City, California	
CA82	Cudahy City, California	
CA83	Culver City, California	
CA84	Cupertino City, California	
CA85	Cypress City, California	
CA86	Daly City, California	
CA87	Dana Point City, California	
CA88	Danville Town, California	
CA89	Davis City, California	
CA90	Del Norte County, California	
CA91	Delano City, California	
CA92	Desert Hot Springs City, California	
CA93	Diamond Bar City, California	
CA94	Dinuba City, California	
CA95	Dixon City, California	

State ID	Qualifying Subdivision	Consolidated State Allocation
CA96	Downey City, California	
CA97	Duarte City, California	
CA98	Dublin City, California	
CA99	East Palo Alto City, California	
CA100	Eastvale City, California	
CA101	El Cajon City, California	
CA102	El Centro City, California	
CA103	El Cerrito City, California	
CA104	El Dorado County, California	
CA105	El Monte City, California	
CA106	El Paso De Robles (Paso Robles) City, California	
CA107	El Segundo City, California	
CA108	Elk Grove City, California	
CA109	Emeryville City, California	
CA110	Encinitas City, California	
CA111	Escondido City, California	
CA112	Eureka City, California	
CA113	Exeter City, California	
CA114	Fairfield City, California	
CA115	Farmersville City, California	
CA116	Fillmore City, California	Allocations in California will be made in accordance with the California State-Subdivision Agreement.
CA117	Folsom City, California	
CA118	Fontana City, California	
CA119	Fortuna City, California	
CA120	Foster City, California	
CA121	Fountain Valley City, California	
CA122	Fremont City, California	
CA123	Fresno City, California	
CA124	Fresno County, California	
CA125	Fullerton City, California	
CA126	Galt City, California	
CA127	Garden Grove City, California	
CA128	Gardena City, California	
CA129	Gilroy City, California	
CA130	Glendale City, California	
CA131	Glendora City, California	
CA132	Glenn County, California	
CA133	Goleta City, California	
CA134	Grand Terrace City, California	
CA135	Grass Valley City, California	
CA136	Greenfield City, California	
CA137	Grover Beach City, California	
CA138	Half Moon Bay City, California	
CA139	Hanford City, California	
CA140	Hawaiian Gardens City, California	
CA141	Hawthorne City, California	

State ID	Qualifying Subdivision	Consolidated State Allocation
CA142	Hayward City, California	
CA143	Healdsburg City, California	
CA144	Hemet City, California	
CA145	Hercules City, California	
CA146	Hermosa Beach City, California	
CA147	Hesperia City, California	
CA148	Highland City, California	
CA149	Hillsborough Town, California	
CA150	Hollister City, California	
CA151	Humboldt County, California	
CA152	Huntington Beach City, California	
CA153	Huntington Park City, California	
CA154	Imperial Beach City, California	
CA155	Imperial City, California	
CA156	Imperial County, California	
CA157	Indio City, California	
CA158	Inglewood City, California	
CA159	Inyo County, California	
CA160	Irvine City, California	
CA161	Jurupa Valley City, California	
CA162	Kerman City, California	
CA163	Kern County, California	Allocations in California will be made in accordance with the California State-Subdivision Agreement.
CA164	King City, California	
CA165	Kings County, California	
CA166	Kingsburg City, California	
CA167	La Cañada Flintridge City, California	
CA168	La Habra City, California	
CA169	La Mesa City, California	
CA170	La Mirada City, California	
CA171	La Palma City, California	
CA172	La Puente City, California	
CA173	La Quinta City, California	
CA174	La Verne City, California	
CA175	Lafayette City, California	
CA176	Laguna Beach City, California	
CA177	Laguna Hills City, California	
CA178	Laguna Niguel City, California	
CA179	Laguna Woods City, California	
CA180	Lake County, California	
CA181	Lake Elsinore City, California	
CA182	Lake Forest City, California	
CA183	Lakeport City, California	
CA184	Lakewood City, California	
CA185	Lancaster City, California	
CA186	Larkspur City, California	
CA187	Lassen County, California	
CA188	Lathrop City, California	

State ID	Qualifying Subdivision	Consolidated State Allocation
CA189	Lawndale City, California	
CA190	Lemon Grove City, California	
CA191	Lemoore City, California	
CA192	Lincoln City, California	
CA193	Lindsay City, California	
CA194	Livermore City, California	
CA195	Livingston City, California	
CA196	Lodi City, California	
CA197	Loma Linda City, California	
CA198	Lomita City, California	
CA199	Lompoc City, California	
CA200	Long Beach City, California	
CA201	Los Alamitos City, California	
CA202	Los Altos City, California	
CA203	Los Angeles City, California	
CA204	Los Angeles County, California	
CA205	Los Banos City, California	
CA206	Los Gatos Town, California	
CA207	Lynwood City, California	
CA208	Madera City, California	
CA209	Madera County, California	
CA210	Malibu City, California	Allocations in California
CA211	Manhattan Beach City, California	will be made in
CA212	Manteca City, California	accordance with the
CA213	Marin County, California	California State-
CA214	Marina City, California	Subdivision Agreement.
CA215	Mariposa County, California	
CA216	Martinez City, California	
CA217	Marysville City, California	
CA218	Maywood City, California	
CA219	McFarland City, California	
CA220	Mendocino County, California	
CA221	Mendota City, California	
CA222	Menifee City, California	
CA223	Menlo Park City, California	
CA224	Merced City, California	
CA225	Merced County, California	
CA226	Mill Valley City, California	
CA227	Millbrae City, California	
CA228	Milpitas City, California	
CA229	Mission Viejo City, California	
CA230	Modesto City, California	
CA231	Modoc County, California	
CA232	Mono County, California	
CA233	Monrovia City, California	
CA234	Montclair City, California	
CA235	Montebello City, California	

State ID	Qualifying Subdivision	Consolidated State Allocation
CA236	Monterey City, California	
CA237	Monterey County, California	
CA238	Monterey Park City, California	
CA239	Moorpark City, California	
CA240	Moraga Town, California	
CA241	Moreno Valley City, California	
CA242	Morgan Hill City, California	
CA243	Morro Bay City, California	
CA244	Mountain View City, California	
CA245	Murrieta City, California	
CA246	Napa City, California	
CA247	Napa County, California	
CA248	National City, California	
CA249	Nevada County, California	
CA250	Newark City, California	
CA251	Newman City, California	
CA252	Newport Beach City, California	
CA253	Norco City, California	
CA254	Norwalk City, California	
CA255	Novato City, California	
CA256	Oakdale City, California	
CA257	Oakland City, California	Allocations in California will be made in accordance with the California State-Subdivision Agreement.
CA258	Oakley City, California	
CA259	Oceanside City, California	
CA260	Ontario City, California	
CA261	Orange City, California	
CA262	Orange County, California	
CA263	Orange Cove City, California	
CA264	Orinda City, California	
CA265	Oroville City, California	
CA266	Oxnard City, California	
CA267	Pacific Grove City, California	
CA268	Pacifica City, California	
CA269	Palm Desert City, California	
CA270	Palm Springs City, California	
CA271	Palmdale City, California	
CA272	Palo Alto City, California	
CA273	Palos Verdes Estates City, California	
CA274	Paramount City, California	
CA275	Parlier City, California	
CA276	Pasadena City, California	
CA277	Patterson City, California	
CA278	Perris City, California	
CA279	Petaluma City, California	
CA280	Pico Rivera City, California	
CA281	Piedmont City, California	
CA282	Pinole City, California	

State ID	Qualifying Subdivision	Consolidated State Allocation
CA283	Pittsburg City, California	
CA284	Placentia City, California	
CA285	Placer County, California	
CA286	Placerville City, California	
CA287	Pleasant Hill City, California	
CA288	Pleasanton City, California	
CA289	Plumas County, California	
CA290	Pomona City, California	
CA291	Port Hueneme City, California	
CA292	Porterville City, California	
CA293	Poway City, California	
CA294	Rancho Cordova City, California	
CA295	Rancho Cucamonga City, California	
CA296	Rancho Mirage City, California	
CA297	Rancho Palos Verdes City, California	
CA298	Rancho Santa Margarita City, California	
CA299	Red Bluff City, California	
CA300	Redding City, California	
CA301	Redlands City, California	
CA302	Redondo Beach City, California	
CA303	Redwood City, California	Allocations in California will be made in accordance with the California State-Subdivision Agreement.
CA304	Reedley City, California	
CA305	Rialto City, California	
CA306	Richmond City, California	
CA307	Ridgecrest City, California	
CA308	Ripon City, California	
CA309	Riverbank City, California	
CA310	Riverside City, California	
CA311	Riverside County, California	
CA312	Rocklin City, California	
CA313	Rohnert Park City, California	
CA314	Rosemead City, California	
CA315	Roseville City, California	
CA316	Sacramento City, California	
CA317	Sacramento County, California	
CA318	Salinas City, California	
CA319	San Anselmo Town, California	
CA320	San Benito County, California	
CA321	San Bernardino City, California	
CA322	San Bernardino County, California	
CA323	San Bruno City, California	
CA324	San Buenaventura (Ventura) City, California	
CA325	San Carlos City, California	
CA326	San Clemente City, California	
CA327	San Diego City, California	
CA328	San Diego County, California	

State ID	Qualifying Subdivision	Consolidated State Allocation
CA329	San Dimas City, California	
CA330	San Fernando City, California	
CA331	San Francisco City, California	
CA332	San Gabriel City, California	
CA333	San Jacinto City, California	
CA334	San Joaquin County, California	
CA335	San Jose City, California	
CA336	San Juan Capistrano City, California	
CA337	San Leandro City, California	
CA338	San Luis Obispo City, California	
CA339	San Luis Obispo County, California	
CA340	San Marcos City, California	
CA341	San Marino City, California	
CA342	San Mateo City, California	
CA343	San Mateo County, California	
CA344	San Pablo City, California	
CA345	San Rafael City, California	
CA346	San Ramon City, California	
CA347	Sanger City, California	
CA348	Santa Ana City, California	
CA349	Santa Barbara City, California	Allocations in California will be made in accordance with the California State-Subdivision Agreement.
CA350	Santa Barbara County, California	
CA351	Santa Clara City, California	
CA352	Santa Clara County, California	
CA353	Santa Clarita City, California	
CA354	Santa Cruz City, California	
CA355	Santa Cruz County, California	
CA356	Santa Fe Springs City, California	
CA357	Santa Maria City, California	
CA358	Santa Monica City, California	
CA359	Santa Paula City, California	
CA360	Santa Rosa City, California	
CA361	Santee City, California	
CA362	Saratoga City, California	
CA363	Scotts Valley City, California	
CA364	Seal Beach City, California	
CA365	Seaside City, California	
CA366	Selma City, California	
CA367	Shafter City, California	
CA368	Shasta County, California	
CA369	Shasta Lake City, California	
CA371	Sierra Madre City, California	
CA372	Signal Hill City, California	
CA373	Simi Valley City, California	
CA374	Siskiyou County, California	
CA375	Solana Beach City, California	
CA376	Solano County, California	

State ID	Qualifying Subdivision	Consolidated State Allocation
CA377	Soledad City, California	
CA378	Sonoma City, California	
CA379	Sonoma County, California	
CA380	South El Monte City, California	
CA381	South Gate City, California	
CA382	South Lake Tahoe City, California	
CA383	South Pasadena City, California	
CA384	South San Francisco City, California	
CA385	Stanislaus County, California	
CA386	Stanton City, California	
CA387	Stockton City, California	
CA388	Suisun City, California	
CA389	Sunnyvale City, California	
CA390	Susanville City, California	
CA391	Sutter County, California	
CA392	Tehachapi City, California	
CA393	Tehama County, California	
CA394	Temecula City, California	
CA395	Temple City, California	
CA396	Thousand Oaks City, California	
CA397	Torrance City, California	Allocations in California will be made in accordance with the California State-Subdivision Agreement.
CA398	Tracy City, California	
CA399	Trinity County, California	
CA400	Truckee Town, California	
CA401	Tulare City, California	
CA402	Tulare County, California	
CA403	Tuolumne County, California	
CA404	Turlock City, California	
CA405	Tustin City, California	
CA406	Twentynine Palms City, California	
CA407	Ukiah City, California	
CA408	Union City, California	
CA409	Upland City, California	
CA410	Vacaville City, California	
CA411	Vallejo City, California	
CA412	Ventura County, California	
CA413	Victorville City, California	
CA414	Visalia City, California	
CA415	Vista City, California	
CA416	Walnut City, California	
CA417	Walnut Creek City, California	
CA418	Wasco City, California	
CA419	Watsonville City, California	
CA420	West Covina City, California	
CA421	West Hollywood City, California	
CA422	West Sacramento City, California	
CA423	Westminster City, California	

State ID	Qualifying Subdivision	Consolidated State Allocation
CA424	Whittier City, California	Allocations in California will be made in accordance with the California State-Subdivision Agreement.
CA425	Wildomar City, California	
CA426	Windsor Town, California	
CA427	Woodland City, California	
CA428	Yolo County, California	
CA429	Yorba Linda City, California	
CA430	Yuba City, California	
CA431	Yuba County, California	
CA432	Yucaipa City, California	
CA433	Yucca Valley Town, California	

State ID	Qualifying Subdivision	Consolidated State Allocation
CO1	Adams County, Colorado	
CO2	Alamosa City, Colorado	
CO3	Alamosa County, Colorado	
CO4	Arapahoe County, Colorado	
CO5	Archuleta County, Colorado	
CO6	Arvada City, Colorado	
CO7	Aurora City, Colorado	
CO8	Baca County, Colorado	
CO9	Bent County, Colorado	
CO10	Black Hawk City, Colorado	
CO11	Boulder City, Colorado	
CO12	Boulder County, Colorado	
CO13	Brighton City, Colorado	
CO14	Broomfield City, Colorado	
CO15	Cañon City, Colorado	
CO16	Castle Pines City, Colorado	
CO17	Castle Rock Town, Colorado	
CO18	Centennial City, Colorado	
CO19	Chaffee County, Colorado	
CO20	Cheyenne County, Colorado	
CO21	Clear Creek County, Colorado	
CO22	Colorado Springs City, Colorado	Allocations in Colorado will be made in accordance with the Colorado Opioids Settlement Memorandum of Understanding.
CO23	Commerce City, Colorado	
CO24	Conejos County, Colorado	
CO25	Costilla County, Colorado	
CO26	Crowley County, Colorado	
CO27	Custer County, Colorado	
CO28	Delta County, Colorado	
CO29	Denver City, Colorado	
CO30	Dolores County, Colorado	
CO31	Douglas County, Colorado	
CO32	Durango City, Colorado	
CO33	Eagle County, Colorado	
CO34	El Paso County, Colorado	
CO35	Elbert County, Colorado	
CO36	Englewood City, Colorado	
CO37	Erie Town, Colorado	
CO38	Evans City, Colorado	
CO39	Federal Heights City, Colorado	
CO40	Firestone Town, Colorado	
CO41	Fort Collins City, Colorado	
CO42	Fort Morgan City, Colorado	
CO43	Fountain City, Colorado	
CO44	Frederick Town, Colorado	
CO45	Fremont County, Colorado	
CO46	Fruita City, Colorado	
CO47	Garfield County, Colorado	
CO48	Gilpin County, Colorado	
CO49	Golden City, Colorado	

State ID	Qualifying Subdivision	Consolidated State Allocation
CO50	Grand County, Colorado	
CO51	Grand Junction City, Colorado	
CO52	Greeley City, Colorado	
CO53	Greenwood Village City, Colorado	
CO54	Gunnison County, Colorado	
CO55	Hinsdale County, Colorado	
CO56	Hudson Town, Colorado	
CO57	Huerfano County, Colorado	
CO58	Jackson County, Colorado	
CO59	Jefferson County, Colorado	
CO60	Johnstown, Colorado	
CO61	Kiowa County, Colorado	
CO62	Kit Carson County, Colorado	
CO63	La Plata County, Colorado	
CO64	Lafayette City, Colorado	
CO65	Lake County, Colorado	
CO66	Lakewood City, Colorado	
CO67	Larimer County, Colorado	
CO68	Las Animas County, Colorado	
CO69	Lincoln County, Colorado	
CO70	Littleton City, Colorado	
CO71	Logan County, Colorado	Allocations in Colorado will be made in accordance with the Colorado Opioids Settlement Memorandum of Understanding.
CO72	Lone Tree City, Colorado	
CO73	Longmont City, Colorado	
CO74	Louisville City, Colorado	
CO75	Loveland City, Colorado	
CO76	Mesa County, Colorado	
CO77	Mineral County, Colorado	
CO78	Moffat County, Colorado	
CO79	Montezuma County, Colorado	
CO80	Montrose City, Colorado	
CO81	Montrose County, Colorado	
CO82	Morgan County, Colorado	
CO83	Northglenn City, Colorado	
CO84	Otero County, Colorado	
CO85	Ouray County, Colorado	
CO86	Park County, Colorado	
CO87	Parker Town, Colorado	
CO88	Phillips County, Colorado	
CO89	Pitkin County, Colorado	
CO90	Prowers County, Colorado	
CO91	Pueblo City, Colorado	
CO92	Pueblo County, Colorado	
CO93	Rio Blanco County, Colorado	
CO94	Rio Grande County, Colorado	
CO95	Routt County, Colorado	
CO96	Saguache County, Colorado	
CO97	San Juan County, Colorado	
CO98	San Miguel County, Colorado	

State ID	Qualifying Subdivision	Consolidated State Allocation
CO99	Sedgwick County, Colorado	
CO100	Sheridan City, Colorado	
CO101	Steamboat Springs City, Colorado	
CO102	Sterling City, Colorado	
CO103	Summit County, Colorado	
CO104	Superior Town, Colorado	
CO105	Teller County, Colorado	
CO106	Thornton City, Colorado	
CO107	Washington County, Colorado	
CO108	Weld County, Colorado	
CO109	Wellington Town, Colorado	
CO110	Westminster City, Colorado	
CO111	Wheat Ridge City, Colorado	
CO112	Windsor Town, Colorado	
CO113	Yuma County, Colorado	
CO114	Aguilar Town, Colorado	
CO115	Akron Town, Colorado	
CO116	Alma Town, Colorado	
CO117	Antonito Town, Colorado	
CO118	Arriba Town, Colorado	
CO119	Aspen City, Colorado	
CO120	Ault Town, Colorado	Allocations in Colorado will be made in accordance with the Colorado Opioids Settlement Memorandum of Understanding.
CO121	Avon Town, Colorado	
CO122	Basalt Town, Colorado	
CO123	Bayfield Town, Colorado	
CO124	Bennett Town, Colorado	
CO125	Berthoud Town, Colorado	
CO126	Bethune Town, Colorado	
CO127	Blanca Town, Colorado	
CO128	Blue River Town, Colorado	
CO129	Boone Town, Colorado	
CO130	Bow Mar Town, Colorado	
CO131	Branson Town, Colorado	
CO132	Breckenridge Town, Colorado	
CO133	Brookside Town, Colorado	
CO134	Brush City, Colorado	
CO135	Buena Vista Town, Colorado	
CO136	Burlington City, Colorado	
CO137	Calhan Town, Colorado	
CO138	Campo Town, Colorado	
CO139	Carbondale Town, Colorado	
CO140	Cedaredge Town, Colorado	
CO141	Center Town, Colorado	
CO142	Central City, Colorado	
CO143	Cheraw Town, Colorado	
CO144	Cherry Hills Village City, Colorado	
CO145	Cheyenne Wells Town, Colorado	
CO146	City Of Creede Town, Colorado	

State ID	Qualifying Subdivision	Consolidated State Allocation
CO147	Coal Creek Town, Colorado	
CO148	Cokedale Town, Colorado	
CO149	Collbran Town, Colorado	
CO150	Columbine Valley Town, Colorado	
CO151	Cortez City, Colorado	
CO152	Craig City, Colorado	
CO153	Crawford Town, Colorado	
CO154	Crested Butte Town, Colorado	
CO155	Crestone Town, Colorado	
CO156	Cripple Creek City, Colorado	
CO157	Crook Town, Colorado	
CO158	Crowley Town, Colorado	
CO159	Dacono City, Colorado	
CO160	De Beque Town, Colorado	
CO161	Deer Trail Town, Colorado	
CO162	Del Norte Town, Colorado	
CO163	Delta City, Colorado	
CO164	Dillon Town, Colorado	
CO165	Dinosaur Town, Colorado	
CO166	Dolores Town, Colorado	
CO167	Dove Creek Town, Colorado	
CO168	Eads Town, Colorado	Allocations in Colorado will be made in accordance with the Colorado Opioids Settlement Memorandum of Understanding.
CO169	Eagle Town, Colorado	
CO170	Eaton Town, Colorado	
CO171	Eckley Town, Colorado	
CO172	Edgewater City, Colorado	
CO173	Elizabeth Town, Colorado	
CO174	Empire Town, Colorado	
CO175	Estes Park Town, Colorado	
CO176	Fairplay Town, Colorado	
CO177	Flagler Town, Colorado	
CO178	Fleming Town, Colorado	
CO179	Florence City, Colorado	
CO180	Fort Lupton City, Colorado	
CO181	Fowler Town, Colorado	
CO182	Foxfield Town, Colorado	
CO183	Fraser Town, Colorado	
CO184	Frisco Town, Colorado	
CO185	Garden City Town, Colorado	
CO186	Genoa Town, Colorado	
CO187	Georgetown Town, Colorado	
CO188	Gilcrest Town, Colorado	
CO189	Glendale City, Colorado	
CO190	Glenwood Springs City, Colorado	
CO191	Granada Town, Colorado	
CO192	Granby Town, Colorado	
CO193	Grand Lake Town, Colorado	
CO194	Green Mountain Falls Town, Colorado	

State ID	Qualifying Subdivision	Consolidated State Allocation
CO195	Grover Town, Colorado	
CO196	Gunnison City, Colorado	
CO197	Gypsum Town, Colorado	
CO198	Hartman Town, Colorado	
CO199	Haswell Town, Colorado	
CO200	Haxtun Town, Colorado	
CO201	Hayden Town, Colorado	
CO202	Hillrose Town, Colorado	
CO203	Holly Town, Colorado	
CO204	Holyoke City, Colorado	
CO205	Hooper Town, Colorado	
CO206	Hot Sulphur Springs Town, Colorado	
CO207	Hotchkiss Town, Colorado	
CO208	Hugo Town, Colorado	
CO209	Idaho Springs City, Colorado	
CO210	Ignacio Town, Colorado	
CO211	Iliff Town, Colorado	
CO212	Jamestown Town, Colorado	
CO213	Julesburg Town, Colorado	
CO214	Keenesburg Town, Colorado	
CO215	Kersey Town, Colorado	Allocations in Colorado will be made in accordance with the Colorado Opioids Settlement Memorandum of Understanding.
CO216	Kim Town, Colorado	
CO217	Kiowa Town, Colorado	
CO218	Kit Carson Town, Colorado	
CO219	Kremmling Town, Colorado	
CO220	La Jara Town, Colorado	
CO221	La Junta City, Colorado	
CO222	La Salle Town, Colorado	
CO223	La Veta Town, Colorado	
CO224	Lake City Town, Colorado	
CO225	Lakeside Town, Colorado	
CO226	Lamar City, Colorado	
CO227	Larkspur Town, Colorado	
CO228	Las Animas City, Colorado	
CO229	Leadville City, Colorado	
CO230	Limon Town, Colorado	
CO231	Lochbuie Town, Colorado	
CO232	Log Lane Village Town, Colorado	
CO233	Lyons Town, Colorado	
CO234	Manassa Town, Colorado	
CO235	Mancos Town, Colorado	
CO236	Manitou Springs City, Colorado	
CO237	Manzanola Town, Colorado	
CO238	Marble Town, Colorado	
CO239	Mead Town, Colorado	
CO240	Meeker Town, Colorado	
CO241	Merino Town, Colorado	
CO242	Milliken Town, Colorado	

State ID	Qualifying Subdivision	Consolidated State Allocation
CO243	Minturn Town, Colorado	
CO244	Moffat Town, Colorado	
CO245	Monte Vista City, Colorado	
CO246	Montezuma Town, Colorado	
CO247	Monument Town, Colorado	
CO248	Morrison Town, Colorado	
CO249	Mount Crested Butte Town, Colorado	
CO250	Mountain View Town, Colorado	
CO251	Mountain Village Town, Colorado	
CO252	Naturita Town, Colorado	
CO253	Nederland Town, Colorado	
CO254	New Castle Town, Colorado	
CO255	Norwood Town, Colorado	
CO256	Nucla Town, Colorado	
CO257	Nunn Town, Colorado	
CO258	Oak Creek Town, Colorado	
CO259	Olathe Town, Colorado	
CO260	Olney Springs Town, Colorado	
CO261	Ophir Town, Colorado	
CO262	Orchard City Town, Colorado	
CO263	Ordway Town, Colorado	Allocations in Colorado will be made in accordance with the Colorado Opioids Settlement Memorandum of Understanding.
CO264	Otis Town, Colorado	
CO265	Ouray City, Colorado	
CO266	Ovid Town, Colorado	
CO267	Pagosa Springs Town, Colorado	
CO268	Palisade Town, Colorado	
CO269	Palmer Lake Town, Colorado	
CO270	Paoli Town, Colorado	
CO271	Paonia Town, Colorado	
CO272	Parachute Town, Colorado	
CO273	Peetz Town, Colorado	
CO274	Pierce Town, Colorado	
CO275	Pitkin Town, Colorado	
CO276	Platteville Town, Colorado	
CO277	Poncha Springs Town, Colorado	
CO278	Pritchett Town, Colorado	
CO279	Ramah Town, Colorado	
CO280	Rangely Town, Colorado	
CO281	Raymer (New Raymer) Town, Colorado	
CO282	Red Cliff Town, Colorado	
CO283	Rico Town, Colorado	
CO284	Ridgway Town, Colorado	
CO285	Rifle City, Colorado	
CO286	Rockvale Town, Colorado	
CO287	Rocky Ford City, Colorado	
CO288	Romeo Town, Colorado	
CO289	Rye Town, Colorado	

State ID	Qualifying Subdivision	Consolidated State Allocation
CO290	Saguache Town, Colorado	
CO291	Salida City, Colorado	
CO292	San Luis Town, Colorado	
CO293	Sanford Town, Colorado	
CO294	Sawpit Town, Colorado	
CO295	Sedgwick Town, Colorado	
CO296	Seibert Town, Colorado	
CO297	Severance Town, Colorado	
CO298	Sheridan Lake Town, Colorado	
CO299	Silt Town, Colorado	
CO300	Silver Cliff Town, Colorado	
CO301	Silver Plume Town, Colorado	
CO302	Silverthorne Town, Colorado	
CO303	Silverton Town, Colorado	
CO304	Simla Town, Colorado	
CO305	Snowmass Village Town, Colorado	
CO306	South Fork Town, Colorado	
CO307	Springfield Town, Colorado	
CO308	Starkville Town, Colorado	Allocations in Colorado will be made in accordance with the Colorado Opioids Settlement Memorandum of Understanding.
CO309	Stratton Town, Colorado	
CO310	Sugar City Town, Colorado	
CO311	Swink Town, Colorado	
CO312	Telluride Town, Colorado	
CO313	Timnath Town, Colorado	
CO314	Trinidad City, Colorado	
CO315	Two Buttes Town, Colorado	
CO316	Vail Town, Colorado	
CO317	Victor City, Colorado	
CO318	Vilas Town, Colorado	
CO319	Vona Town, Colorado	
CO320	Walden Town, Colorado	
CO321	Walsenburg City, Colorado	
CO322	Walsh Town, Colorado	
CO323	Ward Town, Colorado	
CO324	Westcliffe Town, Colorado	
CO325	Wiggins Town, Colorado	
CO326	Wiley Town, Colorado	
CO327	Williamsburg Town, Colorado	
CO328	Winter Park Town, Colorado	
CO329	Woodland Park City, Colorado	
CO330	Wray City, Colorado	
CO331	Yampa Town, Colorado	
CO332	Yuma City, Colorado	

State ID	Qualifying Subdivision	Consolidated State Allocation
CT1	Andover Town, Connecticut	0.0513214640%
CT2	Ansonia City, Connecticut	0.5316052437%
CT3	Ashford Town, Connecticut	0.1096965130%
CT4	Avon Town, Connecticut	0.5494886534%
CT5	Barkhamsted Town, Connecticut	0.0620629520%
CT6	Beacon Falls Town, Connecticut	0.1953947308%
CT7	Berlin Town, Connecticut	0.5215629385%
CT8	Bethany Town, Connecticut	0.1039156068%
CT9	Bethel Town, Connecticut	0.3522422145%
CT10	Bethlehem Town, Connecticut	0.0078647202%
CT11	Bloomfield Town, Connecticut	0.4888368136%
CT12	Bolton Town, Connecticut	0.1520831395%
CT13	Bozrah Town, Connecticut	0.0582057867%
CT14	Branford Town, Connecticut	0.8903816954%
CT15	Bridgeport City, Connecticut	3.2580743095%
CT16	Bridgewater Town, Connecticut	0.0118125935%
CT17	Bristol City, Connecticut	1.3355768908%
CT18	Brookfield Town, Connecticut	0.3087903124%
CT19	Brooklyn Town, Connecticut	0.1880661562%
CT20	Burlington Town, Connecticut	0.2348761319%
CT21	Canaan Town, Connecticut	0.0343343640%
CT22	Canterbury Town, Connecticut	0.1354310071%
CT23	Canton Town, Connecticut	0.2669011966%
CT24	Chaplin Town, Connecticut	0.0523959290%
CT25	Cheshire Town, Connecticut	0.9783113499%
CT26	Chester Town, Connecticut	0.0772387574%
CT27	Clinton Town, Connecticut	0.5348726093%
CT28	Colchester Town, Connecticut	0.6134395770%
CT29	Colebrook Town, Connecticut	0.0296870114%
CT30	Columbia Town, Connecticut	0.1005666237%
CT31	Cornwall Town, Connecticut	0.0486027928%
CT32	Coventry Town, Connecticut	0.3460011479%
CT33	Cromwell Town, Connecticut	0.4750451453%
CT34	Danbury City, Connecticut	1.1556465907%
CT35	Darien Town, Connecticut	0.6429649345%
CT36	Deep River Town, Connecticut	0.0924563595%
CT37	Derby City, Connecticut	0.3503125449%
CT38	Durham Town, Connecticut	0.0079309232%
CT39	East Granby Town, Connecticut	0.1455975170%
CT40	East Haddam Town, Connecticut	0.3145696377%
CT41	East Hampton Town, Connecticut	0.4637546663%
CT42	East Hartford Town, Connecticut	1.2645454069%
CT43	East Haven Town, Connecticut	0.8590923735%
CT44	East Lyme Town, Connecticut	0.6375826296%
CT45	East Windsor Town, Connecticut	0.2419743793%
CT46	Eastford Town, Connecticut	0.0446651958%
CT47	Easton Town, Connecticut	0.1354961231%
CT48	Ellington Town, Connecticut	0.4010047839%
CT49	Enfield Town, Connecticut	0.9173431190%

State ID	Qualifying Subdivision	Consolidated State Allocation
CT50	Essex Town, Connecticut	0.1431870357%
CT51	Fairfield Town, Connecticut	1.4212308415%
CT52	Farmington Town, Connecticut	0.6572091547%
CT53	Franklin Town, Connecticut	0.0446032416%
CT54	Glastonbury Town, Connecticut	1.0420644550%
CT55	Goshen Town, Connecticut	0.0030464255%
CT56	Granby Town, Connecticut	0.2928405247%
CT57	Greenwich Town, Connecticut	1.5644702467%
CT58	Griswold Town, Connecticut	0.3865570141%
CT59	Groton Town, Connecticut	1.4033874500%
CT60	Guilford Town, Connecticut	0.8399392493%
CT61	Haddam Town, Connecticut	0.0151716553%
CT62	Hamden Town, Connecticut	1.7724359413%
CT63	Hampton Town, Connecticut	0.0429454985%
CT64	Hartford City, Connecticut	5.3268549899%
CT65	Hartland Town, Connecticut	0.0359782738%
CT66	Harwinton Town, Connecticut	0.0126363764%
CT67	Hebron Town, Connecticut	0.1593443254%
CT68	Kent Town, Connecticut	0.0835899976%
CT69	Killingly Town, Connecticut	0.6116898413%
CT70	Killingworth Town, Connecticut	0.2652963170%
CT71	Lebanon Town, Connecticut	0.2746607824%
CT72	Ledyard Town, Connecticut	0.5514380850%
CT73	Lisbon Town, Connecticut	0.1156355161%
CT74	Litchfield Town, Connecticut	0.3481982974%
CT75	Lyme Town, Connecticut	0.0023141411%
CT76	Madison Town, Connecticut	0.7594223560%
CT77	Manchester Town, Connecticut	1.3929765818%
CT78	Mansfield Town, Connecticut	0.3058754037%
CT79	Marlborough Town, Connecticut	0.0766010346%
CT80	Meriden City, Connecticut	1.8508778149%
CT81	Middlebury Town, Connecticut	0.0276033951%
CT82	Middlefield Town, Connecticut	0.0075627554%
CT83	Middletown City, Connecticut	1.5343128975%
CT84	Milford City, Connecticut	1.8215679630%
CT85	Monroe Town, Connecticut	0.4307375445%
CT86	Montville Town, Connecticut	0.5806185940%
CT87	Morris Town, Connecticut	0.0099785725%
CT88	Naugatuck Borough, Connecticut	1.0644527326%
CT89	New Britain City, Connecticut	1.5740557511%
CT90	New Canaan Town, Connecticut	0.6136187204%
CT91	New Fairfield Town, Connecticut	0.2962030448%
CT92	New Hartford Town, Connecticut	0.1323482193%
CT93	New Haven City, Connecticut	5.8061427601%
CT94	New London City, Connecticut	1.0536729060%
CT95	New Milford Town, Connecticut	1.0565475001%
CT96	Newington Town, Connecticut	0.7132456565%
CT97	Newtown, Connecticut	0.5964476353%
CT98	Norfolk Town, Connecticut	0.0442819100%

State ID	Qualifying Subdivision	Consolidated State Allocation
CT99	North Branford Town, Connecticut	0.4795791623%
CT100	North Canaan Town, Connecticut	0.0913148022%
CT101	North Haven Town, Connecticut	0.7922543069%
CT102	North Stonington Town, Connecticut	0.1803885830%
CT103	Norwalk City, Connecticut	1.5918210823%
CT104	Norwich City, Connecticut	1.1639182124%
CT105	Old Lyme Town, Connecticut	0.0247921386%
CT106	Old Saybrook Town, Connecticut	0.4181170767%
CT107	Orange Town, Connecticut	0.3683598812%
CT108	Oxford Town, Connecticut	0.3955127994%
CT109	Plainfield Town, Connecticut	0.5352043161%
CT110	Plainville Town, Connecticut	0.3937549612%
CT111	Plymouth Town, Connecticut	0.4213382978%
CT112	Pomfret Town, Connecticut	0.1174722050%
CT113	Portland Town, Connecticut	0.3205523149%
CT114	Preston Town, Connecticut	0.1319895374%
CT115	Prospect Town, Connecticut	0.3056173107%
CT116	Putnam Town, Connecticut	0.2953254103%
CT117	Redding Town, Connecticut	0.1726435223%
CT118	Ridgefield Town, Connecticut	0.6645173744%
CT119	Rocky Hill Town, Connecticut	0.3929175425%
CT120	Roxbury Town, Connecticut	0.0037924445%
CT121	Salem Town, Connecticut	0.1075219911%
CT122	Salisbury Town, Connecticut	0.1052257347%
CT123	Scotland Town, Connecticut	0.0395212218%
CT124	Seymour Town, Connecticut	0.5301171581%
CT125	Sharon Town, Connecticut	0.0761294123%
CT126	Shelton City, Connecticut	0.5601099879%
CT127	Sherman Town, Connecticut	0.0494382353%
CT128	Simsbury Town, Connecticut	0.6988446241%
CT129	Somers Town, Connecticut	0.2491740063%
CT130	South Windsor Town, Connecticut	0.7310935932%
CT131	Southbury Town, Connecticut	0.0581965974%
CT132	Southington Town, Connecticut	0.9683065927%
CT133	Sprague Town, Connecticut	0.0874709763%
CT134	Stafford Town, Connecticut	0.3388202949%
CT135	Stamford City, Connecticut	2.9070395589%
CT136	Sterling Town, Connecticut	0.0949826467%
CT137	Stonington Town, Connecticut	0.5576891315%
CT138	Stratford Town, Connecticut	0.9155695700%
CT139	Suffield Town, Connecticut	0.3402792315%
CT140	Thomaston Town, Connecticut	0.2664061562%
CT141	Thompson Town, Connecticut	0.2673479187%
CT142	Tolland Town, Connecticut	0.4342020371%
CT143	Torrington City, Connecticut	1.3652460176%
CT144	Trumbull Town, Connecticut	0.7617744403%
CT145	Union Town, Connecticut	0.0153941764%

State ID	Qualifying Subdivision	Consolidated State Allocation
CT146	Vernon Town, Connecticut	0.7027162157%
CT147	Voluntown, Connecticut	0.0733181557%
CT148	Wallingford Town, Connecticut	1.5350353996%
CT149	Warren Town, Connecticut	0.0489758024%
CT150	Washington Town, Connecticut	0.1553517897%
CT151	Waterbury City, Connecticut	4.6192219654%
CT152	Waterford Town, Connecticut	0.7608802056%
CT153	Watertown, Connecticut	0.6868118808%
CT154	West Hartford Town, Connecticut	1.6216697477%
CT155	West Haven City, Connecticut	1.4026972589%
CT156	Westbrook Town, Connecticut	0.2586999280%
CT157	Weston Town, Connecticut	0.3664201329%
CT158	Westport Town, Connecticut	0.8921084083%
CT159	Wethersfield Town, Connecticut	0.6208707168%
CT160	Willington Town, Connecticut	0.0975268185%
CT161	Wilton Town, Connecticut	0.6378099925%
CT162	Winchester Town, Connecticut	0.3760305376%
CT163	Windham Town, Connecticut	1.0108949901%
CT164	Windsor Locks Town, Connecticut	0.3174167624%
CT165	Windsor Town, Connecticut	0.7548324123%
CT166	Wolcott Town, Connecticut	0.5443693820%
CT167	Woodbridge Town, Connecticut	0.2435300513%
CT168	Woodbury Town, Connecticut	0.3411988605%
CT169	Woodmont Borough, Connecticut	0.0173159412%
CT170	Woodstock Town, Connecticut	0.1817110623%

State ID	Qualifying Subdivision	Consolidated State Allocation
DE1	Dover City, Delaware	25.00000000% ($1.00)
DE2	Kent County, Delaware	25.00000000% ($1.00)
DE3	Middletown, Delaware	0.0000000000%
DE4	Milford City, Delaware	0.0000000000%
DE5	New Castle County, Delaware	0.0000000000%
DE6	Newark City, Delaware	0.0000000000%
DE7	Seaford City, Delaware	25.00000000% ($1.00)
DE8	Smyrna Town, Delaware	0.0000000000%
DE9	Sussex County, Delaware	25.00000000% ($1.00)
DE10	Wilmington City, Delaware	0.0000000000%

State ID	Qualifying Subdivision	Consolidated State Allocation
GA1	Acworth City, Georgia	0.1010066057%
GA2	Adel City, Georgia	0.0545649432%
GA3	Albany City, Georgia	0.3157843012%
GA4	Alma City, Georgia	0.0720108615%
GA5	Alpharetta City, Georgia	0.2110377863%
GA6	Americus City, Georgia	0.0651732444%
GA7	Appling County, Georgia	0.1891925647%
GA8	Arlington City, Georgia	0.0057755147%
GA9	Athens-Clarke County Unified Government, Georgia	1.3856330305%
GA10	Atkinson County, Georgia	0.0986720780%
GA11	Atlanta City, Georgia	2.9922320659%
GA12	Augusta-Richmond County Consolidated Government, Georgia	2.7761021713%
GA13	Bacon County, Georgia	0.1326313298%
GA14	Bainbridge City, Georgia	0.0569861790%
GA15	Baker County, Georgia	0.0138992540%
GA16	Baldwin County, Georgia	0.2940093402%
GA17	Banks County, Georgia	0.2108287241%
GA18	Barrow County, Georgia	0.7562315570%
GA19	Bartow County, Georgia	1.0945235112%
GA20	Ben Hill County, Georgia	0.0834031458%
GA21	Berrien County, Georgia	0.1225733642%
GA22	Blackshear City, Georgia	0.0349161927%
GA23	Blakely City, Georgia	0.0158441397%
GA24	Bleckley County, Georgia	0.1430561858%
GA25	Brantley County, Georgia	0.2875410777%
GA26	Braselton Town, Georgia	0.0371467624%
GA27	Brookhaven City, Georgia	0.0913450445%
GA28	Brooks County, Georgia	0.1455943886%
GA29	Brunswick City, Georgia	0.1020085339%
GA30	Bryan County, Georgia	0.2289883650%
GA31	Buford City, Georgia	0.0023586547%
GA32	Bulloch County, Georgia	0.4088475182%
GA33	Burke County, Georgia	0.1875413288%
GA34	Butts County, Georgia	0.3178860983%
GA35	Calhoun City, Georgia	0.1780085402%
GA36	Calhoun County, Georgia	0.0360783561%
GA37	Camden County, Georgia	0.3387009665%
GA38	Candler County, Georgia	0.0990882539%
GA39	Canton City, Georgia	0.1378274535%
GA40	Carroll County, Georgia	1.4108548814%
GA41	Carrollton City, Georgia	0.4395018339%
GA42	Cartersville City, Georgia	0.2991406477%
GA43	Catoosa County, Georgia	1.0548339612%
GA44	Chamblee City, Georgia	0.0537051979%
GA45	Charlton County, Georgia	0.1046313818%
GA46	Chatham County, Georgia	1.4544033708%

State ID	Qualifying Subdivision	Consolidated State Allocation
GA47	Chattooga County, Georgia	0.3317513109%
GA48	Cherokee County, Georgia	2.1190683851%
GA49	Clarkston City, Georgia	0.0175253481%
GA50	Clay County, Georgia	0.0274637104%
GA51	Clayton County, Georgia	1.6728881377%
GA52	Clinch County, Georgia	0.0617206810%
GA53	Cobb County, Georgia	5.8580801967%
GA54	Coffee County, Georgia	0.4164755944%
GA55	College Park City, Georgia	0.1805996391%
GA56	Colquitt County, Georgia	0.2578612394%
GA57	Columbia County, Georgia	1.2905730633%
GA58	Columbus City, Georgia	1.8227140298%
GA59	Conyers City, Georgia	0.1202231912%
GA60	Cook County, Georgia	0.0973405674%
GA61	Cordele City, Georgia	0.0583989534%
GA62	Covington City, Georgia	0.1969084378%
GA63	Coweta County, Georgia	0.9767276305%
GA64	Crawford County, Georgia	0.1282569558%
GA65	Crisp County, Georgia	0.1296658905%
GA66	Cusseta-Chattahoochee County Unified Government, Georgia	0.0695538650%
GA67	Dade County, Georgia	0.1799465490%
GA68	Dallas City, Georgia	0.0916776643%
GA69	Dalton City, Georgia	0.3628092518%
GA70	Damascus City, Georgia	0.0005040301%
GA71	Dawson City, Georgia	0.0138696254%
GA72	Dawson County, Georgia	0.3192782415%
GA73	Decatur City, Georgia	0.1040340531%
GA74	Decatur County, Georgia	0.1633371087%
GA75	Dekalb County, Georgia	4.0579602979%
GA76	Demorest City, Georgia	0.0233539880%
GA77	Dodge County, Georgia	0.3228398634%
GA78	Dooly County, Georgia	0.0758970226%
GA79	Doraville City, Georgia	0.0619484258%
GA80	Dougherty County, Georgia	0.4519146718%
GA81	Douglas City, Georgia	0.2364366638%
GA82	Douglas County, Georgia	1.2411219485%
GA83	Douglasville City, Georgia	0.2313289102%
GA84	Dublin City, Georgia	0.1598683843%
GA85	Duluth City, Georgia	0.1174400509%
GA86	Dunwoody City, Georgia	0.0823645400%
GA87	Early County, Georgia	0.0433467628%
GA88	East Point City, Georgia	0.2308433908%
GA89	Echols County, Georgia	0.0262187359%
GA90	Effingham County, Georgia	0.4370293068%
GA91	Elbert County, Georgia	0.2655117233%
GA92	Emanuel County, Georgia	0.2278497555%
GA93	Evans County, Georgia	0.1156959749%
GA94	Fairburn City, Georgia	0.0542552469%

State ID	Qualifying Subdivision	Consolidated State Allocation
GA95	Fannin County, Georgia	0.5651805280%
GA96	Fayette County, Georgia	0.6527012475%
GA97	Fayetteville City, Georgia	0.1201203794%
GA98	Fitzgerald City, Georgia	0.0569093853%
GA99	Floyd County, Georgia	0.9887350092%
GA100	Forest Park City, Georgia	0.1455200592%
GA101	Forsyth County, Georgia	1.7110664570%
GA102	Franklin County, Georgia	0.5550296650%
GA103	Fulton County, Georgia	3.2792330120%
GA104	Gainesville City, Georgia	0.3640437388%
GA105	Georgetown-Quitman County Unified Government, Georgia	0.0176595651%
GA106	Gilmer County, Georgia	0.4239021158%
GA107	Glascock County, Georgia	0.0283662653%
GA108	Glynn County, Georgia	0.7968809706%
GA109	Gordon County, Georgia	0.4175279543%
GA110	Grady County, Georgia	0.1716497947%
GA111	Greene County, Georgia	0.1737385827%
GA112	Griffin City, Georgia	0.2287480123%
GA113	Grovetown City, Georgia	0.0632622854%
GA114	Gwinnett County, Georgia	4.8912732775%
GA115	Habersham County, Georgia	0.4635124652%
GA116	Hall County, Georgia	1.5772937095%
GA117	Hancock County, Georgia	0.0536800967%
GA118	Haralson County, Georgia	1.0934912667%
GA119	Harris County, Georgia	0.2037540782%
GA120	Hart County, Georgia	0.2935398099%
GA121	Heard County, Georgia	0.1232058232%
GA122	Henry County, Georgia	1.9715208583%
GA123	Hinesville City, Georgia	0.2572364025%
GA124	Holly Springs City, Georgia	0.0823108417%
GA125	Houston County, Georgia	0.8378076437%
GA126	Irwin County, Georgia	0.0610553841%
GA127	Jackson County, Georgia	0.9201220386%
GA128	Jasper County, Georgia	0.1152245534%
GA129	Jeff Davis County, Georgia	0.3659791686%
GA130	Jefferson City, Georgia	0.0881783943%
GA131	Jefferson County, Georgia	0.1517559349%
GA132	Jenkins County, Georgia	0.0808740550%
GA133	Johns Creek City, Georgia	0.1877697040%
GA134	Johnson County, Georgia	0.0876584323%
GA135	Jones County, Georgia	0.2773521617%
GA136	Kennesaw City, Georgia	0.1446191663%
GA137	Kingsland City, Georgia	0.1313198199%
GA138	Lagrange City, Georgia	0.2069622772%
GA139	Lakeland City, Georgia	0.0155232109%
GA140	Lamar County, Georgia	0.2083015245%
GA141	Lanier County, Georgia	0.0574613256%
GA142	Laurens County, Georgia	0.5249834521%

State ID	Qualifying Subdivision	Consolidated State Allocation
GA143	Lawrenceville City, Georgia	0.1647173317%
GA144	Lee County, Georgia	0.2162850866%
GA145	Liberty County, Georgia	0.2931642086%
GA146	Lilburn City, Georgia	0.0538355752%
GA147	Lincoln County, Georgia	0.1000487479%
GA148	Loganville City, Georgia	0.1468681321%
GA149	Long County, Georgia	0.1216766548%
GA150	Lowndes County, Georgia	0.6253829866%
GA151	Lumpkin County, Georgia	0.3139555802%
GA152	Macon County, Georgia	0.1110857755%
GA153	Macon-Bibb County Unified Government, Georgia	2.0265214623%
GA154	Madison County, Georgia	0.5114434091%
GA155	Marietta City, Georgia	0.7354006996%
GA156	Marion County, Georgia	0.0615218771%
GA157	McDonough City, Georgia	0.0803644086%
GA158	McDuffie County, Georgia	0.2216409869%
GA159	McIntosh County, Georgia	0.1678759014%
GA160	Meriwether County, Georgia	0.2015834534%
GA161	Milledgeville City, Georgia	0.1343842887%
GA162	Miller County, Georgia	0.0562389307%
GA163	Milton City, Georgia	0.0765630644%
GA164	Mitchell County, Georgia	0.1842864232%
GA165	Monroe City, Georgia	0.1616058698%
GA166	Monroe County, Georgia	0.2463868890%
GA167	Montgomery County, Georgia	0.0685440855%
GA168	Morgan County, Georgia	0.1807932852%
GA169	Moultrie City, Georgia	0.1150272968%
GA170	Murray County, Georgia	0.5636808736%
GA171	Nashville City, Georgia	0.0288042758%
GA172	Newnan City, Georgia	0.2037973462%
GA173	Newton County, Georgia	0.6206699754%
GA174	Norcross City, Georgia	0.0762036242%
GA175	Oconee County, Georgia	0.2721000475%
GA176	Oglethorpe County, Georgia	0.1461658711%
GA177	Paulding County, Georgia	1.7495211188%
GA178	Peach County, Georgia	0.2319656673%
GA179	Peachtree City, Georgia	0.2219833492%
GA180	Peachtree Corners City, Georgia	0.2099400952%
GA181	Perry City, Georgia	0.0954580908%
GA182	Pickens County, Georgia	0.3905362384%
GA183	Pierce County, Georgia	0.2012068205%
GA184	Pike County, Georgia	0.1072270653%
GA185	Polk County, Georgia	0.7130941429%
GA186	Pooler City, Georgia	0.0516303360%
GA187	Powder Springs City, Georgia	0.0633430906%
GA188	Pulaski County, Georgia	0.1671565625%
GA189	Putnam County, Georgia	0.2061208707%
GA190	Rabun County, Georgia	0.3170130000%

State ID	Qualifying Subdivision	Consolidated State Allocation
GA191	Randolph County, Georgia	0.0382245100%
GA192	Richmond Hill City, Georgia	0.0716382402%
GA193	Riverdale City, Georgia	0.0684460876%
GA194	Rockdale County, Georgia	0.7947696030%
GA195	Rome City, Georgia	0.3719383578%
GA196	Roswell City, Georgia	0.2174642134%
GA197	Sandy Springs City, Georgia	0.2590143480%
GA198	Savannah City, Georgia	1.1246685243%
GA199	Schley County, Georgia	0.0238356678%
GA200	Screven County, Georgia	0.1132053955%
GA201	Seminole County, Georgia	0.0804817769%
GA202	Smyrna City, Georgia	0.2661908888%
GA203	Snellville City, Georgia	0.0758688840%
GA204	Spalding County, Georgia	0.5900646014%
GA205	Springfield City, Georgia	0.0124802329%
GA206	St. Marys City, Georgia	0.0962803562%
GA207	Statesboro City, Georgia	0.1844690660%
GA208	Stephens County, Georgia	0.7520555284%
GA209	Stewart County, Georgia	0.0419742764%
GA210	Stockbridge City, Georgia	0.0302698888%
GA211	Sugar Hill City, Georgia	0.0106058369%
GA212	Sumter County, Georgia	0.1314426325%
GA213	Suwanee City, Georgia	0.0700562332%
GA214	Talbot County, Georgia	0.0410357316%
GA215	Taliaferro County, Georgia	0.0068637499%
GA216	Tattnall County, Georgia	0.2930768128%
GA217	Taylor County, Georgia	0.0819435502%
GA218	Telfair County, Georgia	0.1855378735%
GA219	Terrell County, Georgia	0.0334710962%
GA220	Thomas County, Georgia	0.2077911904%
GA221	Thomasville City, Georgia	0.1281973547%
GA222	Tift County, Georgia	0.2088288220%
GA223	Tifton City, Georgia	0.1416502311%
GA224	Toombs County, Georgia	0.2423104056%
GA225	Towns County, Georgia	0.2454408368%
GA226	Treutlen County, Georgia	0.0571447522%
GA227	Troup County, Georgia	0.4334095739%
GA228	Tucker City, Georgia	0.0615225648%
GA229	Turner County, Georgia	0.0490657711%
GA230	Twiggs County, Georgia	0.0640416265%
GA231	Union City, Georgia	0.1531538090%
GA232	Union County, Georgia	0.2949759089%
GA233	Upson County, Georgia	0.3355566667%
GA234	Valdosta City, Georgia	0.2598246932%
GA235	Vidalia City, Georgia	0.1252530050%
GA236	Villa Rica City, Georgia	0.1397113628%
GA237	Walker County, Georgia	0.8453605309%
GA238	Walton County, Georgia	0.8194381956%
GA239	Ware County, Georgia	0.5170078559%

State ID	Qualifying Subdivision	Consolidated State Allocation
GA240	Warner Robins City, Georgia	0.3969845574%
GA241	Warren County, Georgia	0.0447828045%
GA242	Warwick City, Georgia	0.0103298381%
GA243	Washington County, Georgia	0.1959988913%
GA244	Waycross City, Georgia	0.1358274367%
GA245	Wayne County, Georgia	0.6609347902%
GA246	Webster County Unified Government, Georgia	0.0143656323%
GA247	Wheeler County, Georgia	0.0675300652%
GA248	White County, Georgia	0.3873386988%
GA249	Whitfield County, Georgia	0.7644288806%
GA250	Wilcox County, Georgia	0.0828696590%
GA251	Wilkes County, Georgia	0.0976306068%
GA252	Wilkinson County, Georgia	0.0847297279%
GA253	Winder City, Georgia	0.2007720766%
GA254	Woodbury City, Georgia	0.0085236394%
GA255	Woodstock City, Georgia	0.1942956763%
GA256	Worth County, Georgia	0.1491832321%
GA257	Rincon town, Georgia	0.0275488139%
GA258	South Fulton City, Georgia	0.2561412300%
GA259	Stonecrest City, Georgia	0.0904388800%
GA260	Ashburn City, Georgia	0.0207294209%
GA261	Chatsworth City, Georgia	0.1226056863%
GA262	Dawsonville City, Georgia	0.0022440946%
GA263	Helen City, Georgia	0.0478552392%
GA264	Jackson City, Georgia	0.0568159148%
GA265	Ringgold City, Georgia	0.0585728853%

State ID	Qualifying Subdivision	Consolidated State Allocation
HI1	Hawaii County, Hawaii	18.2671692501%
HI2	Kalawao, Hawaii	0.0034501514%
HI3	Kauai County, Hawaii	5.7006273580%
HI4	Maui County, Hawaii	13.9979969296%
HI5	City and County of Honolulu, Hawaii	62.0307563109%

State ID	Qualifying Subdivision	Consolidated State Allocation
ID1	Ada County, Idaho	13.2776278333%
ID2	Adams County, Idaho	0.1446831902%
ID3	Ammon City, Idaho	0.0812916024%
ID4	Bannock County, Idaho	3.0595589832%
ID5	Bear Lake County, Idaho	0.6082712041%
ID6	Benewah County, Idaho	0.6526829809%
ID7	Bingham County, Idaho	1.6421270812%
ID8	Blackfoot City, Idaho	0.6283857401%
ID9	Blaine County, Idaho	0.9137717551%
ID10	Boise City, Idaho	12.7586409110%
ID11	Boise County, Idaho	0.3309644652%
ID12	Bonner County, Idaho	2.5987361786%
ID13	Bonneville County, Idaho	3.7761253875%
ID14	Boundary County, Idaho	0.8788284447%
ID15	Burley City, Idaho	0.4485975363%
ID16	Butte County, Idaho	0.1839745518%
ID17	Caldwell City, Idaho	1.1958553249%
ID18	Camas County, Idaho	0.0422073443%
ID19	Canyon County, Idaho	5.0120113688%
ID20	Caribou County, Idaho	0.4396183832%
ID21	Cassia County, Idaho	0.7270235866%
ID22	Chubbuck City, Idaho	0.4841935447%
ID23	Clark County, Idaho	0.0420924425%
ID24	Clearwater County, Idaho	0.4890418390%
ID25	Coeur D'Alene City, Idaho	2.7593778237%
ID26	Custer County, Idaho	0.2133243878%
ID27	Eagle City, Idaho	0.1711876661%
ID28	Elmore County, Idaho	0.8899512165%
ID29	Franklin County, Idaho	0.5753624958%
ID30	Fremont County, Idaho	0.5716071696%
ID31	Garden City, Idaho	0.5582782838%
ID32	Gem County, Idaho	1.3784025725%
ID33	Gooding County, Idaho	0.6966472013%
ID34	Hayden City, Idaho	0.0047132146%
ID35	Idaho County, Idaho	0.8474305547%
ID36	Idaho Falls City, Idaho	3.8875027578%
ID37	Jefferson County, Idaho	0.9842670749%
ID38	Jerome City, Idaho	0.4169017424%
ID39	Jerome County, Idaho	0.6223444291%
ID40	Kootenai County, Idaho	5.6394798565%
ID41	Kuna City, Idaho	0.1849461724%
ID42	Latah County, Idaho	1.2943861166%
ID43	Lemhi County, Idaho	0.4880814284%
ID44	Lewis County, Idaho	0.2882543555%
ID45	Lewiston City, Idaho	2.0176549375%
ID46	Lincoln County, Idaho	0.1930184422%
ID47	Madison County, Idaho	1.2748404845%
ID48	Meridian City, Idaho	2.4045650754%
ID49	Minidoka County, Idaho	0.9140620922%

State ID	Qualifying Subdivision	Consolidated State Allocation
ID50	Moscow City, Idaho	0.6590552650%
ID51	Mountain Home City, Idaho	0.5706694591%
ID52	Nampa City, Idaho	3.3274647954%
ID53	Nez Perce County, Idaho	1.2765833482%
ID54	Oneida County, Idaho	0.2371656647%
ID55	Owyhee County, Idaho	0.5554298409%
ID56	Payette County, Idaho	1.2750728102%
ID57	Pocatello City, Idaho	2.9494898116%
ID58	Post Falls City, Idaho	0.6781328826%
ID59	Power County, Idaho	0.3505171035%
ID60	Preston City, Idaho	0.1496220047%
ID61	Rexburg City, Idaho	0.1336231941%
ID62	Shoshone County, Idaho	1.2841091340%
ID63	Star City, Idaho	0.0001322772%
ID64	Teton County, Idaho	0.4258195211%
ID65	Twin Falls City, Idaho	1.8245765222%
ID66	Twin Falls County, Idaho	3.3104301873%
ID67	Valley County, Idaho	0.8074710814%
ID68	Washington County, Idaho	0.4917358652%

State ID	Qualifying Subdivision	Consolidated State Allocation
IL1	Adams County, Illinois	
IL3	Addison Village, Illinois	
IL4	Alexander County, Illinois	
IL6	Algonquin Village, Illinois	
IL10	Anna City, Illinois	
IL13	Arlington Heights Village, Illinois	
IL14	Aurora City, Illinois	
IL19	Bartlett Village, Illinois	
IL22	Bedford Park Village, Illinois	
IL23	Belleville City, Illinois	
IL24	Bellwood Village, Illinois	
IL27	Bensenville Village, Illinois	
IL28	Benton City, Illinois	
IL30	Berkeley Village, Illinois	
IL31	Berwyn City, Illinois	
IL37	Bloomington City, Illinois	
IL39	Bolingbrook Village, Illinois	
IL40	Bond County, Illinois	
IL41	Boone County, Illinois	
IL46	Bridgeview Village, Illinois	
IL47	Broadview Village, Illinois	
IL49	Brown County, Illinois	Allocations in Illinois will be made in accordance with the Illinois Opioid Allocation Agreement.
IL51	Buffalo Grove Village, Illinois	
IL52	Burbank City, Illinois	
IL53	Bureau County, Illinois	
IL56	Calhoun County, Illinois	
IL57	Calumet City, Illinois	
IL63	Carbondale City, Illinois	
IL65	Carol Stream Village, Illinois	
IL66	Carpentersville Village, Illinois	
IL67	Carroll County, Illinois	
IL70	Cass County, Illinois	
IL75	Champaign City, Illinois	
IL76	Champaign County, Illinois	
IL84	Chicago City, Illinois	
IL85	Chicago Heights City, Illinois	
IL86	Chicago Ridge Village, Illinois	
IL87	Christian County, Illinois	
IL88	Clark County, Illinois	
IL89	Clay County, Illinois	
IL90	Clinton County, Illinois	
IL91	Coles County, Illinois	
IL96	Cook County, Illinois	
IL99	Countryside City, Illinois	
IL100	Crawford County, Illinois	
IL104	Crystal Lake City, Illinois	
IL106	Cumberland County, Illinois	

State ID	Qualifying Subdivision	Consolidated State Allocation
IL107	Danville City, Illinois	
IL110	De Witt County, Illinois	
IL111	Decatur City, Illinois	
IL114	Dekalb City, Illinois	
IL115	Dekalb County, Illinois	
IL117	Des Plaines City, Illinois	
IL120	Dolton Village, Illinois	
IL122	Douglas County, Illinois	
IL125	Downers Grove Village, Illinois	
IL127	Dupage County, Illinois	
IL131	Edgar County, Illinois	
IL132	Edwards County, Illinois	
IL136	Effingham County, Illinois	
IL138	Elgin City, Illinois	
IL141	Elk Grove Village, Illinois	
IL142	Elmhurst City, Illinois	
IL144	Evanston City, Illinois	
IL145	Evergreen Park Village, Illinois	
IL147	Fayette County, Illinois	
IL150	Ford County, Illinois	
IL151	Forest Park Village, Illinois	
IL155	Franklin County, Illinois	Allocations in Illinois will be made in accordance with the Illinois Opioid Allocation Agreement.
IL156	Franklin Park Village, Illinois	
IL160	Fulton County, Illinois	
IL162	Galesburg City, Illinois	
IL163	Gallatin County, Illinois	
IL168	Glendale Heights Village, Illinois	
IL169	Glenview Village, Illinois	
IL174	Granite City, Illinois	
IL177	Greene County, Illinois	
IL180	Grundy County, Illinois	
IL181	Gurnee Village, Illinois	
IL182	Hamilton County, Illinois	
IL183	Hancock County, Illinois	
IL184	Hanover Park Village, Illinois	
IL186	Hardin County, Illinois	
IL188	Harrisburg City, Illinois	
IL190	Harvey City, Illinois	
IL191	Harwood Heights Village, Illinois	
IL193	Henderson County, Illinois	
IL194	Henry County, Illinois	
IL195	Herrin City, Illinois	
IL199	Hillside Village, Illinois	
IL201	Hodgkins Village, Illinois	
IL202	Hoffman Estates Village, Illinois	
IL206	Iroquois County, Illinois	
IL207	Jackson County, Illinois	

State ID	Qualifying Subdivision	Consolidated State Allocation
IL210	Jasper County, Illinois	
IL211	Jefferson County, Illinois	
IL212	Jersey County, Illinois	
IL213	Jo Daviess County, Illinois	
IL214	Johnson County, Illinois	
IL215	Joliet City, Illinois	
IL218	Kane County, Illinois	
IL219	Kankakee City, Illinois	
IL220	Kankakee County, Illinois	
IL222	Kendall County, Illinois	
IL224	Knox County, Illinois	
IL225	La Grange Park Village, Illinois	
IL227	Lake County, Illinois	
IL233	Lasalle County, Illinois	
IL234	Lawrence County, Illinois	
IL235	Lee County, Illinois	
IL247	Livingston County, Illinois	
IL250	Logan County, Illinois	
IL251	Lombard Village, Illinois	
IL254	Lyons Township, Illinois	
IL255	Lyons Village, Illinois	
IL259	Macon County, Illinois	Allocations in Illinois will be made in accordance with the Illinois Opioid Allocation Agreement.
IL260	Macoupin County, Illinois	
IL261	Madison County, Illinois	
IL266	Marion City, Illinois	
IL267	Marion County, Illinois	
IL269	Marshall County, Illinois	
IL270	Mason County, Illinois	
IL271	Massac County, Illinois	
IL275	Maywood Village, Illinois	
IL276	McCook Village, Illinois	
IL277	McDonough County, Illinois	
IL279	McHenry County, Illinois	
IL281	McLean County, Illinois	
IL283	Melrose Park Village, Illinois	
IL284	Menard County, Illinois	
IL285	Mercer County, Illinois	
IL286	Merrionette Park Village, Illinois	
IL287	Metropolis City, Illinois	
IL292	Moline City, Illinois	
IL295	Monroe County, Illinois	
IL296	Montgomery County, Illinois	
IL299	Morgan County, Illinois	
IL304	Moultrie County, Illinois	
IL305	Mount Prospect Village, Illinois	
IL307	Mundelein Village, Illinois	
IL309	Naperville City, Illinois	

State ID	Qualifying Subdivision	Consolidated State Allocation
IL317	Normal Town, Illinois	
IL322	North Riverside Village, Illinois	
IL323	Northbrook Village, Illinois	
IL325	Northlake City, Illinois	
IL329	Oak Lawn Village, Illinois	
IL331	Oak Park Village, Illinois	
IL333	Ogle County, Illinois	
IL334	Orland Park Village, Illinois	
IL337	Oswego Village, Illinois	
IL341	Palatine Village, Illinois	
IL342	Palos Heights City, Illinois	
IL343	Palos Hills City, Illinois	
IL346	Park Ridge City, Illinois	
IL347	Pekin City, Illinois	
IL350	Peoria City, Illinois	
IL351	Peoria County, Illinois	
IL352	Perry County, Illinois	
IL354	Piatt County, Illinois	
IL355	Pike County, Illinois	
IL356	Plainfield Village, Illinois	
IL360	Pope County, Illinois	
IL361	Posen Village, Illinois	Allocations in Illinois will be made in accordance with the Illinois Opioid Allocation Agreement.
IL362	Princeton City, Illinois	
IL365	Pulaski County, Illinois	
IL366	Putnam County, Illinois	
IL367	Quincy City, Illinois	
IL369	Randolph County, Illinois	
IL373	Richland County, Illinois	
IL376	River Forest Village, Illinois	
IL377	River Grove Village, Illinois	
IL380	Riverside Village, Illinois	
IL381	Rock Island City, Illinois	
IL382	Rock Island County, Illinois	
IL384	Rockford City, Illinois	
IL388	Romeoville Village, Illinois	
IL395	Saline County, Illinois	
IL396	Sangamon County, Illinois	
IL399	Schaumburg Village, Illinois	
IL400	Schiller Park Village, Illinois	
IL401	Schuyler County, Illinois	
IL402	Scott County, Illinois	
IL403	Sesser City, Illinois	
IL404	Shelby County, Illinois	
IL408	Skokie Village, Illinois	
IL413	Springfield City, Illinois	
IL414	St Clair County, Illinois	
IL415	St. Charles City, Illinois	

State ID	Qualifying Subdivision	Consolidated State Allocation
IL416	Stark County, Illinois	
IL417	Stephenson County, Illinois	
IL421	Stone Park Village, Illinois	
IL422	Streamwood Village, Illinois	
IL423	Streator City, Illinois	
IL425	Summit Village, Illinois	
IL431	Tazewell County, Illinois	
IL433	Tinley Park Village, Illinois	
IL436	Union County, Illinois	
IL437	Urbana City, Illinois	
IL438	Vermilion County, Illinois	
IL441	Wabash County, Illinois	Allocations in Illinois will be made in accordance with the Illinois Opioid Allocation Agreement.
IL442	Warren County, Illinois	
IL446	Washington County, Illinois	
IL451	Waukegan City, Illinois	
IL453	Wayne County, Illinois	
IL456	West Frankfort City, Illinois	
IL461	Wheaton City, Illinois	
IL463	Wheeling Village, Illinois	
IL464	White County, Illinois	
IL465	Whiteside County, Illinois	
IL466	Will County, Illinois	
IL467	Williamson County, Illinois	
IL470	Winnebago County, Illinois	
IL475	Woodford County, Illinois	
IL476	Woodridge Village, Illinois	
IL485	Cicero Town, Illinois	

State ID	Qualifying Subdivision	Consolidated State Allocation
IN1	Adams County, Indiana	0.3093066943%
IN2	Advance Town, Indiana	0.0005697863%
IN3	Akron Town, Indiana	0.0003285254%
IN4	Alamo Town, Indiana	0.0005749195%
IN5	Albany Town, Indiana	0.0256968486%
IN6	Albion Town, Indiana	0.0216621457%
IN7	Alexandria City, Indiana	0.1062420448%
IN8	Alfordsville Town, Indiana	0.0001539963%
IN9	Allen County, Indiana	1.5529191846%
IN10	Alton Town, Indiana	0.0000307993%
IN11	Altona Town, Indiana	0.0012473700%
IN12	Ambia Town, Indiana	0.0006519177%
IN13	Amboy Town, Indiana	0.0004825217%
IN14	Amo Town, Indiana	0.0005749195%
IN15	Anderson City, Indiana	1.3828918739%
IN16	Andrews Town, Indiana	0.0060520544%
IN17	Angola City, Indiana	0.0947539211%
IN18	Arcadia Town, Indiana	0.0063138481%
IN19	Argos Town, Indiana	0.0167907295%
IN20	Ashley Town, Indiana	0.0062368500%
IN21	Atlanta Town, Indiana	0.0011652386%
IN22	Attica City, Indiana	0.0207587007%
IN23	Auburn City, Indiana	0.1472615249%
IN24	Aurora City, Indiana	0.0094399730%
IN25	Austin City, Indiana	0.0232277747%
IN26	Avilla Town, Indiana	0.0199579200%
IN27	Avon Town, Indiana	0.0164108720%
IN28	Bainbridge Town, Indiana	0.0014783644%
IN29	Bargersville Town, Indiana	0.0121041089%
IN30	Bartholomew County, Indiana	1.1839235258%
IN31	Batesville City, Indiana	0.1547046792%
IN32	Battle Ground Town, Indiana	0.0136286722%
IN33	Bedford City, Indiana	0.3269803359%
IN34	Beech Grove City, Indiana	0.0544736232%
IN35	Benton County, Indiana	0.0744315432%
IN36	Berne City, Indiana	0.0028078658%
IN37	Bethany Town, Indiana	0.0002720601%
IN38	Beverly Shores Town, Indiana	0.0154458285%
IN39	Bicknell City, Indiana	0.0013295014%
IN40	Birdseye Town, Indiana	0.0029464625%
IN41	Blackford County, Indiana	0.2715365360%
IN42	Bloomfield Town, Indiana	0.0042862302%
IN43	Bloomingdale Town, Indiana	0.0026025374%
IN44	Bloomington City, Indiana	0.8390231543%
IN45	Blountsville Town, Indiana	0.0002566605%
IN46	Bluffton City, Indiana	0.1002977878%
IN47	Boone County, Indiana	0.6762798684%
IN48	Boonville City, Indiana	0.1007854427%
IN49	Borden Town, Indiana	0.0017504246%

State ID	Qualifying Subdivision	Consolidated State Allocation
IN50	Boston Town, Indiana	0.0005697863%
IN51	Boswell Town, Indiana	0.0021097493%
IN52	Bourbon Town, Indiana	0.0173040505%
IN53	Brazil City, Indiana	0.0626816258%
IN54	Bremen Town, Indiana	0.0529387935%
IN55	Bristol Town, Indiana	0.0158462189%
IN56	Brook Town, Indiana	0.0037369768%
IN57	Brooklyn Town, Indiana	0.0065705086%
IN58	Brooksburg Town, Indiana	0.0009547770%
IN59	Brookston Town, Indiana	0.0116677860%
IN60	Brookville Town, Indiana	0.0538935705%
IN61	Brown County, Indiana	0.1879165471%
IN62	Brownsburg Town, Indiana	0.1125918254%
IN63	Brownstown, Indiana	0.0033622525%
IN64	Bruceville Town, Indiana	0.0002412609%
IN65	Bryant Town, Indiana	0.0003747243%
IN66	Bunker Hill Town, Indiana	0.0010985069%
IN67	Burket Town, Indiana	0.0011139065%
IN68	Burlington Town, Indiana	0.0063805799%
IN69	Burnettsville Town, Indiana	0.0004619889%
IN70	Burns Harbor Town, Indiana	0.0397977762%
IN71	Butler City, Indiana	0.0239156248%
IN72	Cadiz Town, Indiana	0.0002823265%
IN73	Cambridge City Town, Indiana	0.0241517525%
IN74	Camden Town, Indiana	0.0064216456%
IN75	Campbellsburg Town, Indiana	0.0081874698%
IN76	Cannelburg Town, Indiana	0.0002258612%
IN77	Cannelton City, Indiana	0.0018325559%
IN78	Carbon Town, Indiana	0.0026846688%
IN79	Carlisle Town, Indiana	0.0017658242%
IN80	Carmel City, Indiana	0.3676250917%
IN81	Carroll County, Indiana	0.1629794136%
IN82	Carthage Town, Indiana	0.0013141017%
IN83	Cass County, Indiana	0.3389612478%
IN84	Cayuga Town, Indiana	0.0078486779%
IN85	Cedar Grove Town, Indiana	0.0004055236%
IN86	Cedar Lake Town, Indiana	0.0511678360%
IN87	Center Point Town, Indiana	0.0016374940%
IN88	Centerville Town, Indiana	0.0350752231%
IN89	Chalmers Town, Indiana	0.0006827169%
IN90	Chandler Town, Indiana	0.0347518309%
IN91	Charlestown City, Indiana	0.0146039821%
IN92	Chesterfield Town, Indiana	0.0379036217%
IN93	Chesterton Town, Indiana	0.2160003384%
IN94	Chrisney Town, Indiana	0.0032339222%
IN95	Churubusco Town, Indiana	0.0000564653%
IN96	Cicero Town, Indiana	0.0173297165%
IN97	Clark County, Indiana	1.9376070659%
IN98	Clarks Hill Town, Indiana	0.0040603690%

State ID	Qualifying Subdivision	Consolidated State Allocation
IN99	Clarksville Town, Indiana	0.1071762890%
IN100	Clay City Town, Indiana	0.0057697279%
IN101	Clay County, Indiana	0.2954521608%
IN102	Claypool Town, Indiana	0.0024690740%
IN103	Clayton Town, Indiana	0.0006981165%
IN104	Clear Lake Town, Indiana	0.0019762858%
IN105	Clifford Town, Indiana	0.0002309944%
IN106	Clinton City, Indiana	0.0336584572%
IN107	Clinton County, Indiana	0.2744214000%
IN108	Cloverdale Town, Indiana	0.0050202793%
IN109	Coatesville Town, Indiana	0.0007494486%
IN110	Colfax Town, Indiana	0.0046147557%
IN111	Columbia City, Indiana	0.0886402681%
IN112	Columbus City, Indiana	0.0764283618%
IN113	Connersville City, Indiana	0.4636161164%
IN114	Converse Town, Indiana	0.0045736900%
IN115	Corunna Town, Indiana	0.0016374940%
IN116	Corydon Town, Indiana	0.0069811654%
IN117	Country Club Heights Town, Indiana	0.0012217040%
IN118	Covington City, Indiana	0.0257122483%
IN119	Crandall Town, Indiana	0.0000153996%
IN120	Crane Town, Indiana	0.0015656290%
IN121	Crawford County, Indiana	0.1338946464%
IN122	Crawfordsville City, Indiana	0.2738413473%
IN123	Cromwell Town, Indiana	0.0034546502%
IN124	Crothersville Town, Indiana	0.0018222895%
IN125	Crown Point City, Indiana	0.1246189362%
IN126	Culver Town, Indiana	0.0289821030%
IN127	Cynthiana Town, Indiana	0.0032749879%
IN128	Dale Town, Indiana	0.0059750563%
IN129	Daleville Town, Indiana	0.0199784528%
IN130	Dana Town, Indiana	0.0050510785%
IN131	Danville Town, Indiana	0.0039474384%
IN132	Darlington Town, Indiana	0.0074790868%
IN133	Darmstadt Town, Indiana	0.0109491367%
IN134	Daviess County, Indiana	0.3758998260%
IN135	Dayton Town, Indiana	0.0114727241%
IN136	DeKalb County, Indiana	0.2773473296%
IN137	De Motte Town, Indiana	0.0070940960%
IN138	Dearborn County, Indiana	0.9577234994%
IN139	Decatur City, Indiana	0.0090909147%
IN140	Decatur County, Indiana	0.3533239690%
IN141	Decker Town, Indiana	0.0001231970%
IN142	Delaware County, Indiana	1.2035734533%
IN143	Delphi City, Indiana	0.0177249737%
IN144	Denver Town, Indiana	0.0006005856%
IN145	Dillsboro Town, Indiana	0.0060007223%
IN146	Dublin Town, Indiana	0.0051588759%

State ID	Qualifying Subdivision	Consolidated State Allocation
IN147	Dubois County, Indiana	0.2728968366%
IN148	Dugger Town, Indiana	0.0023407437%
IN149	Dune Acres Town, Indiana	0.0046917538%
IN150	Dunkirk City, Indiana	0.0079872746%
IN151	Dunreith Town, Indiana	0.0003387919%
IN152	Dupont Town, Indiana	0.0039782377%
IN153	Dyer Town, Indiana	0.0533186510%
IN154	Earl Park Town, Indiana	0.0009188446%
IN155	East Chicago City, Indiana	0.4621018195%
IN156	East Germantown, Indiana	0.0015861619%
IN157	Eaton Town, Indiana	0.0166418664%
IN158	Economy Town, Indiana	0.0007648483%
IN159	Edgewood Town, Indiana	0.0243673473%
IN160	Edinburgh Town, Indiana	0.0198963215%
IN161	Edwardsport Town, Indiana	0.0001488631%
IN162	Elberfeld Town, Indiana	0.0031569241%
IN163	Elizabeth Town, Indiana	0.0000153996%
IN164	Elizabethtown, Indiana	0.0005133210%
IN165	Elkhart City, Indiana	0.5425802839%
IN166	Elkhart County, Indiana	1.1662652839%
IN167	Ellettsville Town, Indiana	0.0677789032%
IN168	Elnora Town, Indiana	0.0013551674%
IN169	Elwood City, Indiana	0.2112777853%
IN170	English Town, Indiana	0.0003747243%
IN171	Etna Green Town, Indiana	0.0033725189%
IN172	Evansville City, Indiana	1.9321196646%
IN173	Fairland Town, Indiana	0.0005133210%
IN174	Fairmount Town, Indiana	0.0104409489%
IN175	Fairview Park Town, Indiana	0.0093373088%
IN176	Farmersburg Town, Indiana	0.0039731044%
IN177	Farmland Town, Indiana	0.0182074954%
IN178	Fayette County, Indiana	0.2945127834%
IN179	Ferdinand Town, Indiana	0.0189415444%
IN180	Fillmore Town, Indiana	0.0010420416%
IN181	Fishers City, Indiana	0.1521842732%
IN182	Flora Town, Indiana	0.0175966435%
IN183	Floyd County, Indiana	1.5760956272%
IN184	Fort Branch Town, Indiana	0.0073250905%
IN185	Fort Wayne City, Indiana	2.7340040454%
IN186	Fortville Town, Indiana	0.0152712994%
IN187	Fountain City Town, Indiana	0.0045993560%
IN188	Fountain County, Indiana	0.1640779205%
IN189	Fowler Town, Indiana	0.0093886409%
IN190	Fowlerton Town, Indiana	0.0022688788%
IN191	Francesville Town, Indiana	0.0011498390%
IN192	Francisco Town, Indiana	0.0027668001%
IN193	Frankfort City, Indiana	0.1520302769%
IN194	Franklin City, Indiana	0.1074072834%
IN195	Franklin County, Indiana	0.2948618417%

State ID	Qualifying Subdivision	Consolidated State Allocation
IN196	Frankton Town, Indiana	0.0115548554%
IN197	Fremont Town, Indiana	0.0201427156%
IN198	French Lick Town, Indiana	0.0211642243%
IN199	Fulton County, Indiana	0.2359941908%
IN200	Fulton Town, Indiana	0.0002925930%
IN201	Galveston Town, Indiana	0.0012730360%
IN202	Garrett City, Indiana	0.0387249353%
IN203	Gary City, Indiana	0.7295266544%
IN204	Gas City, Indiana	0.0544736232%
IN205	Gaston Town, Indiana	0.0083209332%
IN206	Geneva Town, Indiana	0.0008367132%
IN207	Gentryville Town, Indiana	0.0017966235%
IN208	Georgetown, Indiana	0.0044864254%
IN209	Gibson County, Indiana	0.2588523744%
IN210	Glenwood Town, Indiana	0.0027103348%
IN211	Goodland Town, Indiana	0.0046352885%
IN212	Goshen City, Indiana	0.2386377939%
IN213	Gosport Town, Indiana	0.0097736316%
IN214	Grabill Town, Indiana	0.0057543283%
IN215	Grandview Town, Indiana	0.0048406169%
IN216	Grant County, Indiana	0.7449878825%
IN217	Greencastle City, Indiana	0.0286279115%
IN218	Greendale City, Indiana	0.0136543383%
IN219	Greene County, Indiana	0.4315540875%
IN220	Greenfield City, Indiana	0.0612289274%
IN221	Greens Fork Town, Indiana	0.0017504246%
IN222	Greensboro Town, Indiana	0.0002720601%
IN223	Greensburg City, Indiana	0.0195369968%
IN224	Greentown, Indiana	0.0017452914%
IN225	Greenville Town, Indiana	0.0009291110%
IN226	Greenwood City, Indiana	0.1803758618%
IN227	Griffin Town, Indiana	0.0010112423%
IN228	Griffith Town, Indiana	0.0696165923%
IN229	Hagerstown, Indiana	0.0234433695%
IN230	Hamilton County, Indiana	2.0269762499%
IN231	Hamilton Town, Indiana	0.0034341174%
IN232	Hamlet Town, Indiana	0.0188234806%
IN233	Hammond City, Indiana	1.0770244302%
IN234	Hancock County, Indiana	0.8954422640%
IN235	Hanover Town, Indiana	0.0079667417%
IN236	Hardinsburg Town, Indiana	0.0034649167%
IN237	Harmony Town, Indiana	0.0043529620%
IN238	Harrison County, Indiana	0.5610033742%
IN239	Hartford City, Indiana	0.1033058488%
IN240	Hartsville Town, Indiana	0.0003849907%
IN241	Haubstadt Town, Indiana	0.0066783060%
IN242	Hazleton Town, Indiana	0.0014937641%
IN243	Hebron Town, Indiana	0.0722037301%
IN244	Hendricks County, Indiana	1.5700846384%

State ID	Qualifying Subdivision	Consolidated State Allocation
IN245	Henry County, Indiana	1.1653207733%
IN246	Highland Town, Indiana	0.0864997196%
IN247	Hillsboro Town, Indiana	0.0040501026%
IN248	Hobart City, Indiana	0.1594631648%
IN249	Holland Town, Indiana	0.0044453598%
IN250	Holton Town, Indiana	0.0060058556%
IN251	Hope Town, Indiana	0.0036805115%
IN252	Howard County, Indiana	1.8693507742%
IN253	Hudson Town, Indiana	0.0029669953%
IN254	Huntertown, Indiana	0.0415225347%
IN255	Huntingburg City, Indiana	0.0455829037%
IN256	Huntington City, Indiana	0.2487142849%
IN257	Huntington County, Indiana	0.2617013059%
IN258	Hymera Town, Indiana	0.0020173515%
IN259	Indian Village Town, Indiana	0.0006005856%
IN260	Indianapolis City, Indiana	15.8348539612%
IN261	Ingalls Town, Indiana	0.0015194301%
IN262	Jackson County, Indiana	0.7183516565%
IN263	Jamestown, Indiana	0.0010471748%
IN264	Jasonville City, Indiana	0.0039628380%
IN265	Jasper City, Indiana	0.0892100544%
IN266	Jasper County, Indiana	0.4269598647%
IN267	Jay County, Indiana	0.3117552354%
IN268	Jefferson County, Indiana	0.3577898616%
IN269	Jeffersonville City, Indiana	0.1772754031%
IN270	Jennings County, Indiana	0.4175198917%
IN271	Johnson County, Indiana	1.7413644524%
IN272	Jonesboro City, Indiana	0.0065499758%
IN273	Jonesville Town, Indiana	0.0001847956%
IN274	Kempton Town, Indiana	0.0027462673%
IN275	Kendallville City, Indiana	0.0955393022%
IN276	Kennard Town, Indiana	0.0009034449%
IN277	Kentland Town, Indiana	0.0053796040%
IN278	Kewanna Town, Indiana	0.0005389870%
IN279	Kingman Town, Indiana	0.0037934421%
IN280	Kingsbury Town, Indiana	0.0012935689%
IN281	Kingsford Heights Town, Indiana	0.0045942228%
IN282	Kirklin Town, Indiana	0.0053282719%
IN283	Knightstown, Indiana	0.0036856447%
IN284	Knightsville Town, Indiana	0.0053026058%
IN285	Knox City, Indiana	0.0998614649%
IN286	Knox County, Indiana	0.5298755895%
IN287	Kokomo City, Indiana	0.2824600066%
IN288	Kosciusko County, Indiana	0.4936351277%
IN289	Kouts Town, Indiana	0.0383502110%
IN290	La Crosse Town, Indiana	0.0028283986%
IN291	La Fontaine Town, Indiana	0.0017555578%
IN292	La Paz Town, Indiana	0.0034187178%
IN293	La Porte City, Indiana	0.1637904607%

State ID	Qualifying Subdivision	Consolidated State Allocation
IN294	La Porte County, Indiana	0.7761413333%
IN295	Laconia Town, Indiana	0.0000051332%
IN296	Ladoga Town, Indiana	0.0108156732%
IN297	Lafayette City, Indiana	1.0122433215%
IN298	Lagrange County, Indiana	0.2088446438%
IN299	Lagrange Town, Indiana	0.0232996396%
IN300	Lagro Town, Indiana	0.0008264468%
IN301	Lake County, Indiana	1.8344141478%
IN302	Lake Station City, Indiana	0.0738514905%
IN303	Lakeville Town, Indiana	0.0035470480%
IN304	Lanesville Town, Indiana	0.0000513321%
IN305	Lapel Town, Indiana	0.0216570125%
IN306	Larwill Town, Indiana	0.0024998732%
IN307	Laurel Town, Indiana	0.0013295014%
IN308	Lawrence City, Indiana	0.1413634668%
IN309	Lawrence County, Indiana	0.4144758982%
IN310	Lawrenceburg City, Indiana	0.0397721101%
IN311	Leavenworth Town, Indiana	0.0001385967%
IN312	Lebanon City, Indiana	0.0221087349%
IN313	Leesburg Town, Indiana	0.0032236558%
IN314	Leo-Cedarville Town, Indiana	0.0196037285%
IN315	Lewisville Town, Indiana	0.0006981165%
IN316	Liberty Town, Indiana	0.0173399830%
IN317	Ligonier City, Indiana	0.0407012211%
IN318	Linden Town, Indiana	0.0066885725%
IN319	Linton City, Indiana	0.0214516841%
IN320	Little York Town, Indiana	0.0026795356%
IN321	Livonia Town, Indiana	0.0017966235%
IN322	Lizton Town, Indiana	0.0006827169%
IN323	Logansport City, Indiana	0.0184076906%
IN324	Long Beach Town, Indiana	0.0039115059%
IN325	Loogootee City, Indiana	0.0178533039%
IN326	Losantville Town, Indiana	0.0065191765%
IN327	Lowell Town, Indiana	0.0413531388%
IN328	Lynn Town, Indiana	0.0149633068%
IN329	Lynnville Town, Indiana	0.0045377575%
IN330	Lyons Town, Indiana	0.0016426272%
IN331	Mackey Town, Indiana	0.0006159852%
IN332	Macy Town, Indiana	0.0002617937%
IN333	Madison City, Indiana	0.1309584504%
IN334	Madison County, Indiana	1.3792626945%
IN335	Marengo Town, Indiana	0.0004825217%
IN336	Marion City, Indiana	0.7936558454%
IN337	Markle Town, Indiana	0.0068887677%
IN338	Markleville Town, Indiana	0.0080540063%
IN339	Marshall County, Indiana	0.2679792216%
IN340	Marshall Town, Indiana	0.0025409389%
IN341	Martin County, Indiana	0.0865151193%
IN342	Martinsville City, Indiana	0.0794004904%

State ID	Qualifying Subdivision	Consolidated State Allocation
IN343	Matthews Town, Indiana	0.0050818778%
IN344	Mauckport Town, Indiana	0.0000051332%
IN345	McCordsville Town, Indiana	0.0170833225%
IN346	Mecca Town, Indiana	0.0025460721%
IN347	Medaryville Town, Indiana	0.0008110472%
IN348	Medora Town, Indiana	0.0008007807%
IN349	Mellott Town, Indiana	0.0014732312%
IN350	Mentone Town, Indiana	0.0056311312%
IN351	Merom Town, Indiana	0.0005903191%
IN352	Merrillville Town, Indiana	0.1076947432%
IN353	Miami County, Indiana	0.2157180118%
IN354	Michiana Shores Town, Indiana	0.0016066947%
IN355	Michigan City, Indiana	0.5192652447%
IN356	Michigantown, Indiana	0.0030593931%
IN357	Middlebury Town, Indiana	0.0186335519%
IN358	Middletown, Indiana	0.0039063727%
IN359	Milan Town, Indiana	0.0291463657%
IN360	Milford Town, Indiana	0.0156562901%
IN361	Millersburg Town, Indiana	0.0043940277%
IN362	Millhousen Town, Indiana	0.0001693959%
IN363	Milltown, Indiana	0.0004773885%
IN364	Milton Town, Indiana	0.0000564653%
IN365	Mishawaka City, Indiana	0.5537912143%
IN366	Mitchell City, Indiana	0.0424721785%
IN367	Modoc Town, Indiana	0.0044453598%
IN368	Monon Town, Indiana	0.0132898804%
IN369	Monroe City Town, Indiana	0.0002669269%
IN370	Monroe County, Indiana	1.1604288242%
IN371	Monroe Town, Indiana	0.0007597151%
IN372	Monroeville Town, Indiana	0.0067501710%
IN373	Monrovia Town, Indiana	0.0058929249%
IN374	Monterey Town, Indiana	0.0002874598%
IN375	Montezuma Town, Indiana	0.0078948768%
IN376	Montgomery County, Indiana	0.3881322652%
IN377	Montgomery Town, Indiana	0.0003028594%
IN378	Monticello City, Indiana	0.0859504662%
IN379	Montpelier City, Indiana	0.0238026942%
IN380	Mooreland Town, Indiana	0.0007083830%
IN381	Moores Hill Town, Indiana	0.0009804431%
IN382	Mooresville Town, Indiana	0.0679534323%
IN383	Morgan County, Indiana	1.1892004656%
IN384	Morgantown, Indiana	0.0033263200%
IN385	Morocco Town, Indiana	0.0043324291%
IN386	Morristown, Indiana	0.0014218991%
IN387	Mount Auburn Town, Indiana	0.0004568557%
IN388	Mount Ayr Town, Indiana	0.0004619889%
IN389	Mount Carmel Town, Indiana	0.0002207280%
IN390	Mount Etna Town, Indiana	0.0009496438%
IN391	Mount Summit Town, Indiana	0.0006724505%

State ID	Qualifying Subdivision	Consolidated State Allocation
IN392	Mount Vernon City, Indiana	0.0528001968%
IN393	Mulberry Town, Indiana	0.0102048212%
IN394	Muncie City, Indiana	1.1426730513%
IN395	Munster Town, Indiana	0.1401776953%
IN396	Napoleon Town, Indiana	0.0029207964%
IN397	Nappanee City, Indiana	0.0750937273%
IN398	Nashville Town, Indiana	0.0122940377%
IN399	New Albany City, Indiana	0.1005493151%
IN400	New Amsterdam Town, Indiana	0.0000000000%
IN401	New Carlisle Town, Indiana	0.0260048412%
IN402	New Castle City, Indiana	0.0525435363%
IN403	New Chicago Town, Indiana	0.0302397394%
IN404	New Harmony Town, Indiana	0.0046404217%
IN405	New Haven City, Indiana	0.1210256893%
IN406	New Market Town, Indiana	0.0055849323%
IN407	New Middletown, Indiana	0.0000102664%
IN408	New Palestine Town, Indiana	0.0039269056%
IN409	New Pekin Town, Indiana	0.0237000300%
IN410	New Point Town, Indiana	0.0004311896%
IN411	New Richmond Town, Indiana	0.0029464625%
IN412	New Ross Town, Indiana	0.0030542599%
IN413	New Whiteland Town, Indiana	0.0149735732%
IN414	Newberry Town, Indiana	0.0004311896%
IN415	Newburgh Town, Indiana	0.0335968586%
IN416	Newport Town, Indiana	0.0042554310%
IN417	Newton County, Indiana	0.1317386983%
IN418	Newtown, Indiana	0.0019352201%
IN419	Noble County, Indiana	0.3308610426%
IN420	Noblesville City, Indiana	0.1813255057%
IN421	North Judson Town, Indiana	0.0550690756%
IN422	North Liberty Town, Indiana	0.0258405785%
IN423	North Manchester Town, Indiana	0.0190904075%
IN424	North Salem Town, Indiana	0.0007289158%
IN425	North Vernon City, Indiana	0.1513680928%
IN426	North Webster Town, Indiana	0.0116061875%
IN427	Oakland City, Indiana	0.0117550506%
IN428	Oaktown, Indiana	0.0003028594%
IN429	Odon Town, Indiana	0.0001129306%
IN430	Ogden Dunes Town, Indiana	0.0007545819%
IN431	Ohio County, Indiana	0.0605102780%
IN432	Oldenburg Town, Indiana	0.0017555578%
IN433	Onward Town, Indiana	0.0000205328%
IN434	Oolitic Town, Indiana	0.0059288574%
IN435	Orange County, Indiana	0.1597198253%
IN436	Orestes Town, Indiana	0.0064113791%
IN437	Orland Town, Indiana	0.0025255393%
IN438	Orleans Town, Indiana	0.0250859967%
IN439	Osceola Town, Indiana	0.0333607310%
IN440	Osgood Town, Indiana	0.0249576664%

State ID	Qualifying Subdivision	Consolidated State Allocation
IN441	Ossian Town, Indiana	0.0269134194%
IN442	Otterbein Town, Indiana	0.0047636188%
IN443	Owen County, Indiana	0.2265234186%
IN444	Owensville Town, Indiana	0.0056362644%
IN445	Oxford Town, Indiana	0.0039166391%
IN446	Palmyra Town, Indiana	0.0000821314%
IN447	Paoli Town, Indiana	0.0428417696%
IN448	Paragon Town, Indiana	0.0022226799%
IN449	Parke County, Indiana	0.1418203225%
IN450	Parker City Town, Indiana	0.0194291994%
IN451	Patoka Town, Indiana	0.0042605642%
IN452	Patriot Town, Indiana	0.0022740120%
IN453	Pendleton Town, Indiana	0.0746163388%
IN454	Pennville Town, Indiana	0.0010009759%
IN455	Perry County, Indiana	0.2167651867%
IN456	Perrysville Town, Indiana	0.0037934421%
IN457	Peru City, Indiana	0.1826036749%
IN458	Petersburg City, Indiana	0.0103588175%
IN459	Pierceton Town, Indiana	0.0102869526%
IN460	Pike County, Indiana	0.1238284218%
IN461	Pine Village Town, Indiana	0.0008880453%
IN462	Pittsboro Town, Indiana	0.0022842784%
IN463	Plainfield Town, Indiana	0.1021046776%
IN464	Plainville Town, Indiana	0.0007186494%
IN465	Plymouth City, Indiana	0.1356142717%
IN466	Poneto Town, Indiana	0.0011087733%
IN467	Portage City, Indiana	0.4894412953%
IN468	Porter County, Indiana	1.1076491603%
IN469	Porter Town, Indiana	0.1634722017%
IN470	Portland City, Indiana	0.0123299701%
IN471	Posey County, Indiana	0.1942714610%
IN472	Poseyville Town, Indiana	0.0044658926%
IN473	Pottawattamie Park Town, Indiana	0.0012319704%
IN474	Princes Lakes Town, Indiana	0.0039063727%
IN475	Princeton City, Indiana	0.0453005772%
IN476	Pulaski County, Indiana	0.1885530652%
IN477	Putnam County, Indiana	0.4476056348%
IN478	Randolph County, Indiana	0.1948463805%
IN479	Redkey Town, Indiana	0.0011601054%
IN480	Remington Town, Indiana	0.0024228751%
IN481	Rensselaer City, Indiana	0.0101278231%
IN482	Reynolds Town, Indiana	0.0007083830%
IN483	Richland Town, Indiana	0.0026898020%
IN484	Richmond City, Indiana	0.6900830697%
IN485	Ridgeville Town, Indiana	0.0178943696%
IN486	Riley Town, Indiana	0.0014629648%
IN487	Ripley County, Indiana	0.2963915383%
IN488	Rising Sun City, Indiana	0.0356090769%
IN489	River Forest Town, Indiana	0.0003439251%

State ID	Qualifying Subdivision	Consolidated State Allocation
IN490	Roachdale Town, Indiana	0.0017760906%
IN491	Roann Town, Indiana	0.0009599102%
IN492	Roanoke Town, Indiana	0.0123402365%
IN493	Rochester City, Indiana	0.0090652486%
IN494	Rockport City, Indiana	0.0104768814%
IN495	Rockville Town, Indiana	0.0245162104%
IN496	Rome City Town, Indiana	0.0125096325%
IN497	Rosedale Town, Indiana	0.0056105984%
IN498	Roseland Town, Indiana	0.0028283986%
IN499	Rossville Town, Indiana	0.0134079442%
IN500	Royal Center Town, Indiana	0.0001796623%
IN501	Rush County, Indiana	0.2195011875%
IN502	Rushville City, Indiana	0.0154047628%
IN503	Russellville Town, Indiana	0.0006929833%
IN504	Russiaville Town, Indiana	0.0008059140%
IN505	Salamonia Town, Indiana	0.0002258612%
IN506	Salem City, Indiana	0.0949284502%
IN507	Saltillo Town, Indiana	0.0012833025%
IN508	Sandborn Town, Indiana	0.0002053284%
IN509	Santa Claus Town, Indiana	0.0075252857%
IN510	Saratoga Town, Indiana	0.0045018251%
IN511	Schererville Town, Indiana	0.1304861951%
IN512	Schneider Town, Indiana	0.0009342442%
IN513	Scott County, Indiana	1.2220735416%
IN514	Scottsburg City, Indiana	0.0625019635%
IN515	Seelyville Town, Indiana	0.0082952672%
IN516	Sellersburg Town, Indiana	0.0135722069%
IN517	Selma Town, Indiana	0.0080899388%
IN518	Seymour City, Indiana	0.0450541831%
IN519	Shadeland Town, Indiana	0.0129356889%
IN520	Shamrock Lakes Town, Indiana	0.0030901923%
IN521	Sharpsville Town, Indiana	0.0050818778%
IN522	Shelburn Town, Indiana	0.0044402265%
IN523	Shelby County, Indiana	0.0450541831%
IN524	Shelbyville City, Indiana	0.5457372080%
IN525	Sheridan Town, Indiana	0.0121657074%
IN526	Shipshewana Town, Indiana	0.0047174199%
IN527	Shirley Town, Indiana	0.0011806383%
IN528	Shoals Town, Indiana	0.0066988389%
IN529	Sidney Town, Indiana	0.0004773885%
IN530	Silver Lake Town, Indiana	0.0053128722%
IN531	Somerville Town, Indiana	0.0016939593%
IN532	South Bend City, Indiana	1.3582319336%
IN533	South Whitley Town, Indiana	0.0000564653%
IN534	Southport City, Indiana	0.0003490583%
IN535	Speedway Town, Indiana	0.0716390770%
IN536	Spencer County, Indiana	0.1563113739%
IN537	Spencer Town, Indiana	0.0335301269%
IN538	Spiceland Town, Indiana	0.0016836928%

State ID	Qualifying Subdivision	Consolidated State Allocation
IN539	Spring Grove Town, Indiana	0.0014167659%
IN540	Spring Lake Town, Indiana	0.0003079926%
IN541	Springport Town, Indiana	0.0002771933%
IN542	Spurgeon Town, Indiana	0.0006827169%
IN543	St. Joseph County, Indiana	1.3360462005%
IN544	St. Joe Town, Indiana	0.0029823949%
IN545	St. John Town, Indiana	0.0653868274%
IN546	St. Leon Town, Indiana	0.0011190398%
IN547	St. Paul Town, Indiana	0.0016220943%
IN548	Starke County, Indiana	0.5754687596%
IN549	State Line City Town, Indiana	0.0005800527%
IN550	Staunton Town, Indiana	0.0035419148%
IN551	Steuben County, Indiana	0.2289052280%
IN552	Stilesville Town, Indiana	0.0004517225%
IN553	Stinesville Town, Indiana	0.0014321656%
IN554	Straughn Town, Indiana	0.0004260564%
IN555	Sullivan City, Indiana	0.0150608378%
IN556	Sullivan County, Indiana	0.4997077150%
IN557	Sulphur Springs Town, Indiana	0.0007494486%
IN558	Summitville Town, Indiana	0.0154098960%
IN559	Sunman Town, Indiana	0.0161336786%
IN560	Swayzee Town, Indiana	0.0084954623%
IN561	Sweetser Town, Indiana	0.0043786280%
IN562	Switz City Town, Indiana	0.0006570509%
IN563	Switzerland County, Indiana	0.1390381227%
IN564	Syracuse Town, Indiana	0.0288332399%
IN565	Tell City, Indiana	0.0071351617%
IN566	Tennyson Town, Indiana	0.0014372988%
IN567	Terre Haute City, Indiana	1.0172687340%
IN568	Thorntown, Indiana	0.0019968186%
IN569	Tippecanoe County, Indiana	0.9836513425%
IN570	Tipton City, Indiana	0.0756840464%
IN571	Tipton County, Indiana	0.1461219523%
IN572	Topeka Town, Indiana	0.0102510201%
IN573	Town of Pines Town, Indiana	0.0177506398%
IN574	Trafalgar Town, Indiana	0.0034751831%
IN575	Trail Creek Town, Indiana	0.0070068315%
IN576	Troy Town, Indiana	0.0003695911%
IN577	Ulen Town, Indiana	0.0001385967%
IN578	Union City, Indiana	0.0467276095%
IN579	Union County, Indiana	0.0788666365%
IN580	Uniondale Town, Indiana	0.0020532840%
IN581	Universal Town, Indiana	0.0029823949%
IN582	Upland Town, Indiana	0.0132693475%
IN583	Utica Town, Indiana	0.0015553626%
IN584	Valparaiso City, Indiana	0.4508549566%
IN585	Van Buren Town, Indiana	0.0074585540%
IN586	Vanderburgh County, Indiana	1.8730004864%
IN587	Veedersburg Town, Indiana	0.0174477804%

State ID	Qualifying Subdivision	Consolidated State Allocation
IN588	Vera Cruz Town, Indiana	0.0005287206%
IN589	Vermillion County, Indiana	0.1479237090%
IN590	Vernon Town, Indiana	0.0044556262%
IN591	Versailles Town, Indiana	0.0325753499%
IN592	Vevay Town, Indiana	0.0222627312%
IN593	Vigo County, Indiana	0.7949340146%
IN594	Vincennes City, Indiana	0.0141984585%
IN595	Wabash City, Indiana	0.0616549838%
IN596	Wabash County, Indiana	0.5254353629%
IN597	Wakarusa Town, Indiana	0.0133566121%
IN598	Walkerton Town, Indiana	0.0293414277%
IN599	Wallace Town, Indiana	0.0007443154%
IN600	Walton Town, Indiana	0.0010215088%
IN601	Wanatah Town, Indiana	0.0034289842%
IN602	Warren County, Indiana	0.0576818794%
IN603	Warren Town, Indiana	0.0076587491%
IN604	Warrick County, Indiana	0.3991430003%
IN605	Warsaw City, Indiana	0.2580772597%
IN606	Washington City, Indiana	0.0149581736%
IN607	Washington County, Indiana	0.3404396122%
IN608	Waterloo Town, Indiana	0.0127970922%
IN609	Waveland Town, Indiana	0.0037215772%
IN610	Wayne County, Indiana	0.7657876490%
IN611	Waynetown, Indiana	0.0084133310%
IN612	Wells County, Indiana	0.2019866754%
IN613	West Baden Springs Town, Indiana	0.0054822681%
IN614	West College Corner Town, Indiana	0.0065345762%
IN615	West Harrison Town, Indiana	0.0004773885%
IN616	West Lafayette City, Indiana	0.2612290506%
IN617	West Lebanon Town, Indiana	0.0029772617%
IN618	West Terre Haute Town, Indiana	0.0180175667%
IN619	Westfield City, Indiana	0.1106874046%
IN620	Westport Town, Indiana	0.0022021470%
IN621	Westville Town, Indiana	0.0405164256%
IN622	Wheatfield Town, Indiana	0.0014064995%
IN623	Wheatland Town, Indiana	0.0002361277%
IN624	White County, Indiana	0.2045738132%
IN625	Whiteland Town, Indiana	0.0126892948%
IN626	Whitestown, Indiana	0.0075560849%
IN627	Whitewater Town, Indiana	0.0002977262%
IN628	Whiting City, Indiana	0.0746933369%
IN629	Whitley County, Indiana	0.3073920070%
IN630	Wilkinson Town, Indiana	0.0006365180%
IN631	Williamsport Town, Indiana	0.0094553726%
IN632	Winamac Town, Indiana	0.0021559481%
IN633	Winchester City, Indiana	0.0715004804%
IN634	Windfall City Town, Indiana	0.0058877917%

State ID	Qualifying Subdivision	Consolidated State Allocation
IN635	Winfield Town, Indiana	0.0246548070%
IN636	Wingate Town, Indiana	0.0023253441%
IN637	Winona Lake Town, Indiana	0.0964016815%
IN638	Winslow Town, Indiana	0.0028489315%
IN639	Wolcott Town, Indiana	0.0013397678%
IN640	Wolcottville Town, Indiana	0.0086494586%
IN641	Woodburn City, Indiana	0.0082131358%
IN642	Woodlawn Heights Town, Indiana	0.0012217040%
IN643	Worthington Town, Indiana	0.0026128038%
IN644	Yeoman Town, Indiana	0.0014578316%
IN645	Yorktown, Indiana	0.0901956307%
IN646	Zanesville Town, Indiana	0.0025922710%
IN647	Zionsville Town, Indiana	0.0375853627%
IN648	Cumberland Town, Indiana	0.0148247101%

State ID	Qualifying Subdivision	Consolidated State Allocation
IA1	Adair County, Iowa	0.2556895492%
IA2	Adams County, Iowa	0.1116738610%
IA3	Allamakee County, Iowa	0.4458620571%
IA7	Appanoose County, Iowa	0.5319573473%
IA8	Audubon County, Iowa	0.1208090649%
IA9	Benton County, Iowa	0.5190077951%
IA11	Black Hawk County, Iowa	3.3423948145%
IA13	Boone County, Iowa	0.8229376316%
IA14	Bremer County, Iowa	0.7313291658%
IA15	Buchanan County, Iowa	0.3770114677%
IA16	Buena Vista County, Iowa	0.3269761930%
IA18	Butler County, Iowa	0.2707546223%
IA19	Calhoun County, Iowa	0.1889544807%
IA20	Carroll County, Iowa	0.6033080977%
IA21	Cass County, Iowa	0.3356626501%
IA22	Cedar County, Iowa	0.3655363695%
IA25	Cerro Gordo County, Iowa	1.6302973365%
IA26	Cherokee County, Iowa	0.2378358349%
IA27	Chickasaw County, Iowa	0.2431246372%
IA28	Clarke County, Iowa	0.3046029568%
IA29	Clay County, Iowa	0.2957241797%
IA30	Clayton County, Iowa	0.4574012621%
IA32	Clinton County, Iowa	1.4586196098%
IA36	Crawford County, Iowa	0.3305341145%
IA37	Dallas County, Iowa	1.4775951912%
IA39	Davis County, Iowa	0.1538560657%
IA40	Decatur County, Iowa	0.2531573348%
IA41	Delaware County, Iowa	0.3021348491%
IA43	Des Moines County, Iowa	1.5679856298%
IA44	Dickinson County, Iowa	0.3322329419%
IA46	Dubuque County, Iowa	2.7454332795%
IA47	Emmet County, Iowa	0.1753318082%
IA49	Fayette County, Iowa	0.5284635324%
IA50	Floyd County, Iowa	0.3285468070%
IA53	Franklin County, Iowa	0.2107187034%
IA54	Fremont County, Iowa	0.2047888342%
IA55	Greene County, Iowa	0.3578435662%
IA57	Grundy County, Iowa	0.3230977380%
IA58	Guthrie County, Iowa	0.2308482053%
IA59	Hamilton County, Iowa	0.3501828163%
IA60	Hancock County, Iowa	0.1901084012%
IA61	Hardin County, Iowa	0.4491314985%
IA62	Harrison County, Iowa	0.6178282639%
IA63	Henry County, Iowa	0.4451248302%
IA64	Howard County, Iowa	0.1714212999%
IA65	Humboldt County, Iowa	0.1929611491%
IA66	Ida County, Iowa	0.1680556985%
IA69	Iowa County, Iowa	0.2658504602%
IA70	Jackson County, Iowa	0.5490417812%

State ID	Qualifying Subdivision	Consolidated State Allocation
IA71	Jasper County, Iowa	1.6780568235%
IA72	Jefferson County, Iowa	0.5728253647%
IA73	Johnson County, Iowa	3.8223936863%
IA75	Jones County, Iowa	0.3884865660%
IA77	Keokuk County, Iowa	0.1980255779%
IA78	Kossuth County, Iowa	0.3482275621%
IA80	Lee County, Iowa	1.4586837165%
IA81	Linn County, Iowa	7.3285811041%
IA82	Louisa County, Iowa	0.3358870235%
IA83	Lucas County, Iowa	0.3300533143%
IA84	Lyon County, Iowa	0.1619335092%
IA85	Madison County, Iowa	0.4031349456%
IA86	Mahaska County, Iowa	0.7161999860%
IA88	Marion County, Iowa	1.1788259436%
IA89	Marshall County, Iowa	1.0363488161%
IA92	Mills County, Iowa	0.4947113580%
IA93	Mitchell County, Iowa	0.1894673343%
IA94	Monona County, Iowa	0.4457658971%
IA95	Monroe County, Iowa	0.2157510788%
IA96	Montgomery County, Iowa	0.5308995868%
IA98	Muscatine County, Iowa	1.0607414131%
IA102	O Brien County, Iowa	0.2348228203%
IA103	Osceola County, Iowa	0.1453939821%
IA106	Page County, Iowa	0.5824093155%
IA107	Palo Alto County, Iowa	0.1666132978%
IA110	Plymouth County, Iowa	0.4452850969%
IA111	Pocahontas County, Iowa	0.1165780231%
IA112	Polk County, Iowa	22.8108926250%
IA113	Pottawattamie County, Iowa	3.6145597841%
IA114	Poweshiek County, Iowa	0.4747100695%
IA115	Ringgold County, Iowa	0.1195910378%
IA116	Sac County, Iowa	0.2200782807%
IA117	Scott County, Iowa	8.8614042123%
IA118	Shelby County, Iowa	0.2859158555%
IA120	Sioux County, Iowa	0.4096738283%
IA123	Story County, Iowa	2.1665177789%
IA124	Tama County, Iowa	0.3449901740%
IA125	Taylor County, Iowa	0.1784409829%
IA126	Union County, Iowa	0.4629785445%
IA128	Van Buren County, Iowa	0.1525418785%
IA129	Wapello County, Iowa	1.0026607483%
IA130	Warren County, Iowa	1.3316563022%
IA131	Washington County, Iowa	0.5543626368%
IA135	Wayne County, Iowa	0.2440541843%
IA136	Webster County, Iowa	1.5957758817%
IA138	Winnebago County, Iowa	0.2340535400%
IA139	Winneshiek County, Iowa	0.3674595703%
IA140	Woodbury County, Iowa	2.5662230163%
IA141	Worth County, Iowa	0.2345663935%

State ID	Qualifying Subdivision	Consolidated State Allocation
IA142	Wright County, Iowa	0.2810437467%

State ID	Qualifying Subdivision	Consolidated State Allocation
KS1	Allen County, Kansas	0.2469590982%
KS2	Anderson County, Kansas	0.1033070846%
KS3	Andover City, Kansas	0.2965259109%
KS4	Arkansas City, Kansas	0.2517607353%
KS5	Atchison City, Kansas	0.2261465530%
KS6	Atchison County, Kansas	0.2081347289%
KS7	Barber County, Kansas	0.0868011735%
KS8	Barton County, Kansas	0.3334574382%
KS9	Bourbon County, Kansas	0.2875114592%
KS10	Brown County, Kansas	0.1232303153%
KS11	Butler County, Kansas	0.8706438812%
KS12	Chase County, Kansas	0.0336082678%
KS14	Cherokee County, Kansas	0.3919995171%
KS17	Clay County, Kansas	0.1042947986%
KS19	Coffey County, Kansas	0.1060232980%
KS20	Comanche County, Kansas	0.0219636398%
KS21	Cowley County, Kansas	0.6897088195%
KS22	Crawford County, Kansas	0.7714110714%
KS24	Derby City, Kansas	0.5453586914%
KS25	Dickinson County, Kansas	0.3638160245%
KS26	Dodge City, Kansas	0.5788024418%
KS28	Douglas County, Kansas	1.5924288685%
KS29	Edwards County, Kansas	0.0357396506%
KS30	El Dorado City, Kansas	0.2788280508%
KS31	Elk County, Kansas	0.0499335801%
KS32	Elkhart City, Kansas	0.0460427074%
KS33	Ellis County, Kansas	0.3726150991%
KS34	Ellsworth County, Kansas	0.0784192915%
KS35	Emporia City, Kansas	0.5314129512%
KS37	Finney County, Kansas	0.7153826866%
KS38	Ford County, Kansas	0.6591551252%
KS39	Franklin County, Kansas	0.3340422689%
KS40	Garden City, Kansas	0.5639674708%
KS41	Gardner City, Kansas	0.4851729540%
KS42	Geary County, Kansas	0.4187127502%
KS43	Gove County, Kansas	0.0340631361%
KS44	Graham County, Kansas	0.0310480092%
KS45	Grant County, Kansas	0.1409572980%
KS47	Great Bend City, Kansas	0.3231811438%
KS48	Greeley County Unified Government, Kansas	0.0155434990%
KS49	Greenwood County, Kansas	0.1168768440%
KS50	Hamilton County, Kansas	0.0315158737%
KS51	Harper County, Kansas	0.0693479184%
KS52	Harvey County, Kansas	0.6829965673%
KS53	Haskell County, Kansas	0.0509842361%
KS54	Hays City, Kansas	0.4517508922%
KS55	Haysville City, Kansas	0.2470109420%
KS57	Hutchinson City, Kansas	0.8720750695%

State ID	Qualifying Subdivision	Consolidated State Allocation
KS58	Jackson County, Kansas	0.1711734320%
KS59	Jefferson County, Kansas	0.2473443746%
KS61	Johnson County, Kansas	12.0944030669%
KS62	Junction City, Kansas	0.4741551685%
KS63	Kansas City, Kansas	4.4060498188%
KS64	Kearny County, Kansas	0.0486709060%
KS65	Kingman County, Kansas	0.0906357539%
KS66	Kiowa County, Kansas	0.0319187570%
KS67	Labette County, Kansas	0.2545442897%
KS69	Lansing City, Kansas	0.2592649750%
KS70	Lawrence City, Kansas	2.1351947685%
KS71	Leavenworth City, Kansas	0.7793565010%
KS72	Leavenworth County, Kansas	1.6381480759%
KS73	Leawood City, Kansas	0.7519204801%
KS74	Lenexa City, Kansas	1.2179424409%
KS75	Liberal City, Kansas	0.4082002757%
KS78	Logan County, Kansas	0.0355057183%
KS79	Lyon County, Kansas	0.4294606379%
KS80	Manhattan City, Kansas	1.1916559134%
KS81	Manter City, Kansas	0.0039724166%
KS83	Marshall County, Kansas	0.1254396755%
KS84	McPherson City, Kansas	0.2822331538%
KS85	McPherson County, Kansas	0.3697169383%
KS86	Meade County, Kansas	0.0802482625%
KS87	Merriam City, Kansas	0.2413502294%
KS88	Miami County, Kansas	0.4462127868%
KS90	Montgomery County, Kansas	0.6274462063%
KS92	Morton County, Kansas	0.0505510276%
KS94	Neosho County, Kansas	0.3172684471%
KS95	Ness County, Kansas	0.0359735829%
KS96	Newton City, Kansas	0.4065302570%
KS98	Olathe City, Kansas	3.0725090086%
KS99	Osage County, Kansas	0.2049506509%
KS101	Ottawa City, Kansas	0.2675066256%
KS103	Overland Park City, Kansas	5.2622788811%
KS104	Pawnee County, Kansas	0.0827340421%
KS105	Phillips County, Kansas	0.0673335017%
KS106	Pittsburg City, Kansas	0.4330770471%
KS107	Pottawatomie County, Kansas	0.3212929608%
KS108	Prairie Village City, Kansas	0.4839800835%
KS109	Pratt County, Kansas	0.1817885063%
KS110	Rawlins County, Kansas	0.0326335501%
KS111	Reno County, Kansas	1.2307721233%
KS112	Republic County, Kansas	0.0589509291%
KS113	Rice County, Kansas	0.1216707669%
KS114	Riley County, Kansas	0.9513505103%
KS117	Russell County, Kansas	0.0884263937%
KS118	Salina City, Kansas	1.0036161498%
KS119	Saline County, Kansas	0.7008350540%

State ID	Qualifying Subdivision	Consolidated State Allocation
KS120	Scott County, Kansas	0.0622519732%
KS121	Sedgwick County, Kansas	10.3553321948%
KS122	Seward County, Kansas	0.4190277852%
KS123	Shawnee City, Kansas	1.4379077560%
KS124	Shawnee County, Kansas	3.5054886950%
KS125	Sheridan County, Kansas	0.0327505162%
KS126	Sherman County, Kansas	0.0750792587%
KS127	Smith County, Kansas	0.0460586624%
KS130	Stanton County, Kansas	0.0392178776%
KS131	Stevens County, Kansas	0.0700237227%
KS132	Sumner County, Kansas	0.2934290296%
KS133	Thomas County, Kansas	0.1000970142%
KS134	Topeka City, Kansas	2.7014829146%
KS135	Trego County, Kansas	0.0358436205%
KS136	Ulysses City, Kansas	0.1478592097%
KS137	Wabaunsee County, Kansas	0.1375513777%
KS138	Wallace County, Kansas	0.0199622194%
KS139	Washington County, Kansas	0.0705305759%
KS140	Wichita City, Kansas	10.4437497448%
KS141	Wichita County, Kansas	0.0269541947%
KS142	Wilson County, Kansas	0.1086745303%
KS143	Winfield City, Kansas	0.2560767576%
KS145	Abilene City, Kansas	0.1327990164%
KS146	Anthony City, Kansas	0.0440711418%
KS147	Augusta City, Kansas	0.2017035526%
KS148	Baxter Springs City, Kansas	0.0844335409%
KS149	Bel Aire City, Kansas	0.1836803642%
KS150	Belleville City, Kansas	0.0399286280%
KS151	Beloit City, Kansas	0.0772980066%
KS152	Bentley City, Kansas	0.0111696053%
KS153	Benton City, Kansas	0.0187605992%
KS154	Bonner Springs City, Kansas	0.1727710215%
KS155	Burlingame City, Kansas	0.0191726818%
KS156	Burrton City, Kansas	0.0185220252%
KS157	Caney City, Kansas	0.0422493033%
KS158	Chanute City, Kansas	0.1950017894%
KS159	Cheney City, Kansas	0.0471292279%
KS160	Coffeyville City, Kansas	0.1988623520%
KS161	Colby City, Kansas	0.1152746647%
KS162	Concordia City, Kansas	0.1064040461%
KS163	Edwardsville City, Kansas	0.0976201818%
KS164	Ellsworth City, Kansas	0.0636559061%
KS165	Enterprise City, Kansas	0.0167652523%
KS166	Eudora City, Kansas	0.1386549260%
KS167	Fairway City, Kansas	0.0859517397%
KS168	Fall River City, Kansas	0.0030797747%
KS169	Fort Scott City, Kansas	0.1658740613%
KS170	Galena City, Kansas	0.0612484766%
KS171	Garden Plain City, Kansas	0.0197799613%

State ID	Qualifying Subdivision	Consolidated State Allocation
KS172	Garnett City, Kansas	0.0706613091%
KS173	Goddard City, Kansas	0.1076186052%
KS174	Halstead City, Kansas	0.0439843876%
KS175	Harper City, Kansas	0.0280433004%
KS176	Herington City, Kansas	0.0485823611%
KS177	Hiawatha City, Kansas	0.0670393205%
KS178	Highland City, Kansas	0.0213849143%
KS179	Hillsboro City, Kansas	0.0599037863%
KS180	Hoisington City, Kansas	0.0531803345%
KS181	Hugoton City, Kansas	0.0797705018%
KS182	Humboldt City, Kansas	0.0385622491%
KS183	Independence City, Kansas	0.1827043793%
KS184	Iola City, Kansas	0.1141685485%
KS185	Johnson City City, Kansas	0.0286505799%
KS186	Kechi City, Kansas	0.0457411605%
KS187	Kingman City, Kansas	0.0599688519%
KS188	Leoti City, Kansas	0.0307977467%
KS189	Lincoln Center City, Kansas	0.0257876908%
KS190	Longton City, Kansas	0.0066366975%
KS191	Maize City, Kansas	0.1142336141%
KS192	Marysville City, Kansas	0.0705094892%
KS193	Meade City, Kansas	0.0329449136%
KS194	Medicine Lodge City, Kansas	0.0391261515%
KS195	Mission City, Kansas	0.2141310941%
KS196	Mission Hills City, Kansas	0.0766256614%
KS197	Moundridge City, Kansas	0.0403623991%
KS198	Mount Hope City, Kansas	0.0174809746%
KS199	Neodesha City, Kansas	0.0479533930%
KS200	North Newton City, Kansas	0.0382152322%
KS201	Norton City, Kansas	0.0587542929%
KS202	Oakley City, Kansas	0.0440277647%
KS203	Osawatomie City, Kansas	0.0915907637%
KS204	Park City City, Kansas	0.1722721848%
KS205	Parsons City, Kansas	0.2052387869%
KS206	Phillipsburg City, Kansas	0.0524863008%
KS207	Pleasanton City, Kansas	0.0251153456%
KS208	Pratt City, Kansas	0.1401731248%
KS209	Rantoul City, Kansas	0.0040557596%
KS210	Roeland Park City, Kansas	0.1442722615%
KS211	Russell City, Kansas	0.0950609324%
KS212	Sabetha City, Kansas	0.0553491899%
KS213	Satanta City, Kansas	0.0243128691%
KS214	Scott City, Kansas	0.0810284379%
KS215	Sedgwick City, Kansas	0.0359379341%
KS216	Spring Hill City, Kansas	0.1707106089%
KS217	Sterling City, Kansas	0.0471942936%
KS218	Sublette City, Kansas	0.0287156456%
KS219	Syracuse City, Kansas	0.0353740316%
KS220	Tonganoxie City, Kansas	0.1234078725%

State ID	Qualifying Subdivision	Consolidated State Allocation
KS221	Tribune City, Kansas	0.0157025131%
KS222	Valley Falls City, Kansas	0.0249852143%
KS223	Wakeeney City, Kansas	0.0376947069%
KS224	Wamego City, Kansas	0.1023265980%
KS225	Washington City, Kansas	0.0230983101%
KS226	Weir City, Kansas	0.0137505433%
KS227	Wellington City, Kansas	0.1637485830%
KS228	Westwood City, Kansas	0.0356126057%
KS229	Wilson City, Kansas	0.0154639390%
KS230	Wyandotte County, Kansas	3.2916925050%

State ID	Qualifying Subdivision	Consolidated State Allocation
KY1	Adair County, Kentucky	0.2072149972%
KY2	Allen County, Kentucky	0.3652932746%
KY3	Anderson County, Kentucky	0.3621159370%
KY4	Ashland City, Kentucky	0.9834499202%
KY5	Ballard County, Kentucky	0.1275818571%
KY6	Bardstown City, Kentucky	0.2352870373%
KY7	Barren County, Kentucky	0.3122030586%
KY8	Bath County, Kentucky	0.1600781328%
KY9	Bell County, Kentucky	0.6418579913%
KY12	Berea City, Kentucky	0.1673960319%
KY13	Boone County, Kentucky	2.0430819725%
KY14	Bourbon County, Kentucky	0.2554835051%
KY15	Bowling Green City, Kentucky	0.6707865957%
KY16	Boyd County, Kentucky	0.8927787584%
KY17	Boyle County, Kentucky	0.3790292999%
KY18	Bracken County, Kentucky	0.1275577166%
KY19	Breathitt County, Kentucky	0.5390554414%
KY20	Breckinridge County, Kentucky	0.3244963382%
KY22	Bullitt County, Kentucky	1.0630204077%
KY23	Butler County, Kentucky	0.1624898322%
KY24	Caldwell County, Kentucky	0.1441008473%
KY25	Calloway County, Kentucky	0.0270405279%
KY26	Campbell County, Kentucky	1.0519698931%
KY27	Campbellsville City, Kentucky	0.2769609681%
KY28	Carlisle County, Kentucky	0.0604084438%
KY29	Carroll County, Kentucky	0.2541479356%
KY30	Carter County, Kentucky	0.6015849596%
KY31	Casey County, Kentucky	0.2668572392%
KY32	Christian County, Kentucky	0.4386166388%
KY33	Clark County, Kentucky	0.6110238861%
KY34	Clay County, Kentucky	0.7834161044%
KY35	Clinton County, Kentucky	0.3920484376%
KY36	Columbia City, Kentucky	0.0941274300%
KY37	Covington City, Kentucky	1.7146827203%
KY38	Crittenden County, Kentucky	0.2010231527%
KY39	Cumberland County, Kentucky	0.1857249004%
KY40	Danville City, Kentucky	0.2799464970%
KY41	Daviess County, Kentucky	1.1263935276%
KY42	Edmonson County, Kentucky	0.1884368528%
KY44	Elliott County, Kentucky	0.1458221479%
KY45	Erlanger City, Kentucky	0.3397777298%
KY46	Estill County, Kentucky	0.4049309515%
KY47	Fleming County, Kentucky	0.1823914480%
KY48	Florence City, Kentucky	0.7389020512%
KY49	Floyd County, Kentucky	1.9179322449%
KY50	Fort Thomas City, Kentucky	0.3651296923%
KY51	Frankfort City, Kentucky	0.4254271088%
KY52	Franklin County, Kentucky	0.4438483122%
KY53	Fulton County, Kentucky	0.1040009320%

State ID	Qualifying Subdivision	Consolidated State Allocation
KY54	Gallatin County, Kentucky	0.2347861459%
KY55	Garrard County, Kentucky	0.3127117464%
KY56	Georgetown City, Kentucky	0.2129888920%
KY57	Glasgow City, Kentucky	0.4100978120%
KY58	Grant County, Kentucky	0.5343736918%
KY59	Graves County, Kentucky	0.2447866907%
KY60	Grayson City, Kentucky	0.1405700912%
KY61	Grayson County, Kentucky	0.4371371187%
KY62	Green County, Kentucky	0.1363993307%
KY64	Greenup County, Kentucky	0.6872346204%
KY65	Hancock County, Kentucky	0.1001482246%
KY66	Hardin County, Kentucky	1.6677965130%
KY68	Harlan County, Kentucky	0.9236857078%
KY69	Harrison County, Kentucky	0.2078604027%
KY70	Hart County, Kentucky	0.2333469695%
KY71	Henderson City, Kentucky	0.5644511762%
KY72	Henderson County, Kentucky	0.3796057595%
KY73	Henry County, Kentucky	0.2263086115%
KY74	Hickman County, Kentucky	0.0533625713%
KY76	Hopkins County, Kentucky	0.5493362318%
KY77	Hopkinsville City, Kentucky	0.5662686160%
KY79	Independence City, Kentucky	0.1255237640%
KY81	Jackson County, Kentucky	0.1930879337%
KY83	Jefferson County, Kentucky	14.4939132925%
KY84	Jeffersontown City, Kentucky	0.1981991396%
KY85	Jenkins City, Kentucky	0.0688654541%
KY86	Jessamine County, Kentucky	0.6407795601%
KY87	Johnson County, Kentucky	0.6400798620%
KY88	Kenton County, Kentucky	2.5731398261%
KY89	Knott County, Kentucky	0.4910894879%
KY90	Knox County, Kentucky	0.8060755114%
KY91	Larue County, Kentucky	0.1917133825%
KY92	Laurel County, Kentucky	0.9215642107%
KY93	Lawrence County, Kentucky	0.4474957316%
KY94	Lawrenceburg City, Kentucky	0.0804801232%
KY95	Lee County, Kentucky	0.2235931366%
KY96	Leslie County, Kentucky	0.5525464926%
KY97	Letcher County, Kentucky	0.6327552468%
KY98	Lewis County, Kentucky	0.2492484050%
KY99	Lexington-Fayette Urban County, Kentucky	6.2597070666%
KY100	Lincoln County, Kentucky	0.4109182594%
KY101	Livingston County, Kentucky	0.2056037847%
KY102	Logan County, Kentucky	0.3022584972%
KY103	London City, Kentucky	0.1961505806%
KY106	Lyndon City, Kentucky	0.0748780766%
KY107	Lyon County, Kentucky	0.1367346673%
KY108	Madison County, Kentucky	1.1073052673%
KY109	Madisonville City, Kentucky	0.3927355489%

State ID	Qualifying Subdivision	Consolidated State Allocation
KY110	Magoffin County, Kentucky	0.3084779576%
KY111	Manchester City, Kentucky	0.1800397241%
KY112	Marion County, Kentucky	0.2018769929%
KY113	Marshall County, Kentucky	0.6110803392%
KY114	Martin County, Kentucky	0.4692913886%
KY115	Mason County, Kentucky	0.1741746215%
KY116	McCracken County, Kentucky	0.3377504933%
KY117	McCreary County, Kentucky	0.3011869230%
KY118	McLean County, Kentucky	0.1433881867%
KY119	Meade County, Kentucky	0.3762152436%
KY120	Menifee County, Kentucky	0.1152561711%
KY121	Mercer County, Kentucky	0.2841928256%
KY122	Metcalfe County, Kentucky	0.1167070889%
KY123	Monroe County, Kentucky	0.2890192303%
KY124	Montgomery County, Kentucky	0.5746052526%
KY125	Morehead City, Kentucky	0.1176937487%
KY126	Morgan County, Kentucky	0.0505889526%
KY127	Morganfield City, Kentucky	0.1082087956%
KY129	Muhlenberg County, Kentucky	0.5338036196%
KY130	Murray City, Kentucky	0.5765962314%
KY131	Nelson County, Kentucky	0.4816564321%
KY132	Newport City, Kentucky	0.7312996326%
KY133	Nicholas County, Kentucky	0.1324383199%
KY134	Nicholasville City, Kentucky	0.3723153354%
KY135	Ohio County, Kentucky	0.4467150643%
KY136	Oldham County, Kentucky	0.7333447161%
KY137	Owen County, Kentucky	0.2198857418%
KY138	Owensboro City, Kentucky	0.5118319344%
KY139	Owsley County, Kentucky	0.1294761331%
KY140	Paducah City, Kentucky	1.1041080161%
KY141	Paintsville City, Kentucky	0.3642660363%
KY142	Pendleton County, Kentucky	0.3094900729%
KY143	Perry County, Kentucky	1.4848386091%
KY144	Pike County, Kentucky	1.9294441527%
KY145	Pineville City, Kentucky	0.0736606264%
KY147	Powell County, Kentucky	0.5788951657%
KY148	Prestonsburg City, Kentucky	0.4197933602%
KY149	Pulaski County, Kentucky	0.8723902940%
KY151	Richmond City, Kentucky	0.5069051167%
KY152	Robertson County, Kentucky	0.0346199801%
KY153	Rockcastle County, Kentucky	0.4380501830%
KY154	Rowan County, Kentucky	0.4245058255%
KY155	Russell City, Kentucky	0.1455248537%
KY156	Russell County, Kentucky	0.5599110288%
KY158	Scott County, Kentucky	0.6332443967%
KY159	Shelby County, Kentucky	0.5093783884%
KY160	Shelbyville City, Kentucky	0.1168374662%
KY161	Shepherdsville City, Kentucky	0.1717991328%
KY162	Shively City, Kentucky	0.1040826057%

State ID	Qualifying Subdivision	Consolidated State Allocation
KY163	Simpson County, Kentucky	0.2049906448%
KY164	Somerset City, Kentucky	0.3108498299%
KY166	Spencer County, Kentucky	0.2447695951%
KY167	St. Matthews City, Kentucky	0.1131834246%
KY168	Taylor County, Kentucky	0.1908446071%
KY169	Todd County, Kentucky	0.1788746408%
KY170	Trigg County, Kentucky	0.2047738501%
KY171	Trimble County, Kentucky	0.1174427629%
KY172	Union County, Kentucky	0.2531192882%
KY175	Warren County, Kentucky	0.9893070387%
KY176	Washington County, Kentucky	0.1549834119%
KY177	Wayne County, Kentucky	0.3477965951%
KY178	Webster County, Kentucky	0.2371207742%
KY179	West Liberty City, Kentucky	0.1691975502%
KY181	Whitley County, Kentucky	1.5794132485%
KY182	Winchester City, Kentucky	0.4646999075%
KY183	Wolfe County, Kentucky	0.2600699609%
KY184	Woodford County, Kentucky	0.2675359435%
KY186	Albany City, Kentucky	0.1264298304%
KY187	Alexandria City, Kentucky	0.1080131826%
KY192	Barbourville City, Kentucky	0.0730470168%
KY193	Beattyville City, Kentucky	0.1448233239%
KY195	Bellevue City, Kentucky	0.0965704087%
KY205	Carrollton City, Kentucky	0.0887635005%
KY206	Catlettsburg City, Kentucky	0.1263485793%
KY207	Cave City City, Kentucky	0.0700133478%
KY208	Central City City, Kentucky	0.0844674819%
KY211	Cold Spring City, Kentucky	0.0750717640%
KY212	Corbin City, Kentucky	0.2036058550%
KY215	Crittenden City, Kentucky	0.1485297325%
KY216	Cynthiana City, Kentucky	0.2429917006%
KY218	Dayton City, Kentucky	0.1369669607%
KY220	Dry Ridge City, Kentucky	0.1124383105%
KY222	Edgewood City, Kentucky	0.0997328111%
KY228	Flatwoods City, Kentucky	0.0815134672%
KY230	Flemingsburg City, Kentucky	0.0974474500%
KY231	Fort Mitchell City, Kentucky	0.1045834032%
KY232	Fort Wright City, Kentucky	0.0888485558%
KY233	Franklin City, Kentucky	0.1059281781%
KY238	Harrodsburg City, Kentucky	0.1433328138%
KY240	Hazard City, Kentucky	0.2853655644%
KY242	Highland Heights City, Kentucky	0.1099203272%
KY247	Irvine City, Kentucky	0.0767877105%
KY252	La Grange City, Kentucky	0.0727992716%
KY255	Lebanon City, Kentucky	0.1122041854%
KY256	Leitchfield City, Kentucky	0.1135380642%
KY258	Louisa City, Kentucky	0.0866211036%
KY259	Ludlow City, Kentucky	0.0669617849%
KY261	Martin City, Kentucky	0.2943288201%

State ID	Qualifying Subdivision	Consolidated State Allocation
KY262	Mayfield City, Kentucky	0.2929381596%
KY263	Maysville City, Kentucky	0.1796298526%
KY264	Middlesborough City, Kentucky	0.9627869870%
KY267	Morgantown City, Kentucky	0.1066840944%
KY268	Mount Sterling City, Kentucky	0.1357736978%
KY269	Mount Vernon City, Kentucky	0.1195254191%
KY275	Owingsville City, Kentucky	0.1120741368%
KY276	Paris City, Kentucky	0.1357848757%
KY278	Pikeville City, Kentucky	0.9232553122%
KY280	Princeton City, Kentucky	0.1044295429%
KY283	Russellville City, Kentucky	0.1019054071%
KY286	Southgate City, Kentucky	0.0952700635%
KY288	Stanford City, Kentucky	0.0735805495%
KY291	Taylor Mill City, Kentucky	0.1020398235%
KY294	Union City, Kentucky	0.1260059161%
KY295	Versailles City, Kentucky	0.1700135829%
KY297	Walton City, Kentucky	0.0725720505%
KY301	Wilder City, Kentucky	0.1271712342%
KY302	Williamsburg City, Kentucky	0.2511273232%
KY303	Williamstown City, Kentucky	0.1029710636%

State ID	Qualifying Subdivision	Consolidated State Allocation
LA2	Acadia Parish, Louisiana	
LA3	Alexandria City, Louisiana	
LA4	Allen Parish, Louisiana	
LA5	Ascension Parish, Louisiana	
LA6	Assumption Parish, Louisiana	
LA7	Avoyelles Parish, Louisiana	
LA9	Baldwin Town, Louisiana	
LA10	Bastrop City, Louisiana	
LA12	Beauregard Parish, Louisiana	
LA13	Berwick Town, Louisiana	
LA14	Bienville Parish, Louisiana	
LA15	Bogalusa City, Louisiana	
LA16	Bossier City, Louisiana	
LA17	Bossier Parish, Louisiana	
LA19	Caddo Parish, Louisiana	
LA20	Calcasieu Parish, Louisiana	
LA21	Caldwell Parish, Louisiana	
LA22	Cameron Parish, Louisiana	
LA23	Catahoula Parish, Louisiana	
LA25	Claiborne Parish, Louisiana	
LA26	Concordia Parish, Louisiana	
LA27	Covington City, Louisiana	Allocations in Louisiana will be made in accordance with the Louisiana State-Local Government Opioid Litigation Memorandum of Understanding.
LA29	De Soto Parish, Louisiana	
LA30	Delhi Town, Louisiana	
LA32	Donaldsonville City, Louisiana	
LA33	East Carroll Parish, Louisiana	
LA34	East Feliciana Parish, Louisiana	
LA35	Eunice City, Louisiana	
LA36	Evangeline Parish, Louisiana	
LA37	Ferriday Town, Louisiana	
LA38	Franklin City, Louisiana	
LA39	Franklin Parish, Louisiana	
LA41	Gramercy Town, Louisiana	
LA42	Grant Parish, Louisiana	
LA43	Gretna City, Louisiana	
LA46	Iberia Parish, Louisiana	
LA47	Iberville Parish, Louisiana	
LA48	Jackson Parish, Louisiana	
LA49	Jean Lafitte Town, Louisiana	
LA50	Jefferson Davis Parish, Louisiana	
LA51	Jefferson Parish, Louisiana	
LA52	Kenner City, Louisiana	
LA54	Lafourche Parish, Louisiana	
LA55	Lake Charles City, Louisiana	
LA56	Lake Providence Town, Louisiana	
LA57	Lasalle Parish, Louisiana	
LA58	Lincoln Parish, Louisiana	
LA59	Livingston Parish, Louisiana	
LA60	Lutcher Town, Louisiana	

State ID	Qualifying Subdivision	Consolidated State Allocation
LA61	Madison Parish, Louisiana	
LA62	Madisonville Town, Louisiana	
LA63	Mandeville City, Louisiana	
LA65	Monroe City, Louisiana	
LA66	Morehouse Parish, Louisiana	
LA67	Morgan City, Louisiana	
LA68	Natchitoches City, Louisiana	
LA69	Natchitoches Parish, Louisiana	
LA70	New Iberia City, Louisiana	
LA72	New Roads City, Louisiana	
LA73	Opelousas City, Louisiana	
LA74	Ouachita Parish, Louisiana	
LA75	Patterson City, Louisiana	
LA76	Pearl River Town, Louisiana	
LA77	Pineville City, Louisiana	
LA78	Plaquemines Parish, Louisiana	
LA79	Pointe Coupee Parish, Louisiana	
LA80	Rapides Parish, Louisiana	
LA81	Red River Parish, Louisiana	
LA82	Richland Parish, Louisiana	
LA83	Richwood Town, Louisiana	
LA85	Sabine Parish, Louisiana	Allocations in Louisiana will be made in accordance with the Louisiana State-Local Government Opioid Litigation Memorandum of Understanding.
LA86	Shreveport City, Louisiana	
LA87	Slidell City, Louisiana	
LA88	St Bernard Parish, Louisiana	
LA89	St Charles Parish, Louisiana	
LA90	St Helena Parish, Louisiana	
LA91	St James Parish, Louisiana	
LA92	St John The Baptist Parish, Louisiana	
LA93	St Landry Parish, Louisiana	
LA94	St Martin Parish, Louisiana	
LA95	St Mary Parish, Louisiana	
LA96	St Tammany Parish, Louisiana	
LA97	St. Martinville City, Louisiana	
LA99	Tangipahoa Parish, Louisiana	
LA100	Tensas Parish, Louisiana	
LA102	Union Parish, Louisiana	
LA103	Vermilion Parish, Louisiana	
LA104	Vernon Parish, Louisiana	
LA105	Washington Parish, Louisiana	
LA106	Webster Parish, Louisiana	
LA107	West Baton Rouge Parish, Louisiana	
LA108	West Carroll Parish, Louisiana	
LA109	West Feliciana Parish, Louisiana	
LA110	West Monroe City, Louisiana	
LA111	Westwego City, Louisiana	
LA112	Winn Parish, Louisiana	

State ID	Qualifying Subdivision	Consolidated State Allocation
LA115	East Baton Rouge Parish, Louisiana	
LA116	Lafayette Parish, Louisiana	
LA117	Orleans Parish, Louisiana	
LA118	Terrebonne Parish, Louisiana	
LA119	Sheriff of Acadia Parish, Louisiana	
LA120	Sheriff of Allen Parish, Louisiana	
LA121	Sheriff of Ascension Parish, Louisiana	
LA122	Sheriff of Assumption Parish, Louisiana	
LA123	Sheriff of Avoyelles Parish, Louisiana	
LA124	Sheriff of Beauregard Parish, Louisiana	
LA125	Sheriff of Bienville Parish, Louisiana	
LA126	Sheriff of Bossier Parish, Louisiana	
LA127	Sheriff of Caddo Parish, Louisiana	
LA128	Sheriff of Calcasieu Parish, Louisiana	Allocations in Louisiana will be made in accordance with the Louisiana State-Local Government Opioid Litigation Memorandum of Understanding.
LA129	Sheriff of Caldwell Parish, Louisiana	
LA130	Sheriff of Cameron Parish, Louisiana	
LA131	Sheriff of Catahoula Parish, Louisiana	
LA132	Sheriff of Claiborne Parish, Louisiana	
LA133	Sheriff of Concordia Parish, Louisiana	
LA134	Sheriff of De Soto Parish, Louisiana	
LA135	Sheriff of East Baton Rouge Parish, Louisiana	
LA136	Sheriff of East Carroll Parish, Louisiana	
LA137	Sheriff of East Feliciana Parish, Louisiana	
LA138	Sheriff of Evangeline Parish, Louisiana	
LA139	Sheriff of Franklin Parish, Louisiana	
LA140	Sheriff of Grant Parish, Louisiana	
LA141	Sheriff of Iberia Parish, Louisiana	
LA142	Sheriff of Iberville Parish, Louisiana	

State ID	Qualifying Subdivision	Consolidated State Allocation
LA143	Sheriff of Jackson Parish, Louisiana	
LA144	Sheriff of Jefferson Davis Parish, Louisiana	
LA145	Sheriff of Jefferson Parish, Louisiana	
LA146	Sheriff of Lafayette Parish, Louisiana	
LA147	Sheriff of Lafourche Parish, Louisiana	
LA148	Sheriff of Lasalle Parish, Louisiana	
LA149	Sheriff of Lincoln Parish, Louisiana	
LA150	Sheriff of Livingston Parish, Louisiana	
LA151	Sheriff of Madison Parish, Louisiana	
LA152	Sheriff of Morehouse Parish, Louisiana	
LA153	Sheriff of Natchitoches Parish, Louisiana	Allocations in Louisiana will be made in accordance with the Louisiana State-Local Government Opioid Litigation Memorandum of Understanding.
LA154	Sheriff of Orleans Parish, Louisiana	
LA155	Sheriff of Ouachita Parish, Louisiana	
LA156	Sheriff of Plaquemines Parish, Louisiana	
LA157	Sheriff of Pointe Coupee Parish, Louisiana	
LA158	Sheriff of Rapides Parish, Louisiana	
LA159	Sheriff of Red River Parish, Louisiana	
LA160	Sheriff of Richland Parish, Louisiana	
LA161	Sheriff of Sabine Parish, Louisiana	
LA162	Sheriff of St Bernard Parish, Louisiana	
LA163	Sheriff of St Charles Parish, Louisiana	
LA164	Sheriff of St Helena Parish, Louisiana	
LA165	Sheriff of St James Parish, Louisiana	
LA166	Sheriff of St John The Baptist Parish, Louisiana	
LA167	Sheriff of St Landry Parish, Louisiana	

State ID	Qualifying Subdivision	Consolidated State Allocation
LA168	Sheriff of St Martin Parish, Louisiana	
LA169	Sheriff of St Mary Parish, Louisiana	
LA170	Sheriff of St Tammany Parish, Louisiana	
LA171	Sheriff of Tangipahoa Parish, Louisiana	
LA172	Sheriff of Tensas Parish, Louisiana	
LA173	Sheriff of Terrebonne Parish, Louisiana	Allocations in Louisiana will be made in accordance with the Louisiana State-Local Government Opioid Litigation Memorandum of Understanding.
LA174	Sheriff of Union Parish, Louisiana	
LA175	Sheriff of Vermilion Parish, Louisiana	
LA176	Sheriff of Vernon Parish, Louisiana	
LA177	Sheriff of Washington Parish, Louisiana	
LA178	Sheriff of Webster Parish, Louisiana	
LA179	Sheriff of West Baton Rouge Parish, Louisiana	
LA180	Sheriff of West Carroll Parish, Louisiana	
LA181	Sheriff of West Feliciana Parish, Louisiana	
LA182	Sheriff of Winn Parish, Louisiana	

State ID	Qualifying Subdivision	Consolidated State Allocation
ME1	Androscoggin County, Maine	1.6799535986%
ME2	Aroostook County, Maine	4.0537116218%
ME3	Auburn City, Maine	2.6283332826%
ME4	Augusta City, Maine	3.6779545807%
ME5	Bangor City, Maine	5.2042873123%
ME6	Biddeford City, Maine	2.7393997300%
ME7	Brunswick Town, Maine	1.6113929261%
ME8	Calais City, Maine	0.8369049504%
ME9	Cumberland County, Maine	3.5025701951%
ME10	Falmouth Town, Maine	1.2353278939%
ME11	Franklin County, Maine	1.9717572454%
ME12	Gorham Town, Maine	1.4582940317%
ME13	Hancock County, Maine	3.8494340111%
ME14	Kennebec County, Maine	4.9959268385%
ME15	Kennebunk Town, Maine	0.2185679049%
ME16	Knox County, Maine	2.1010369789%
ME17	Lewiston City, Maine	4.3451006968%
ME18	Lincoln County, Maine	2.1621727981%
ME19	Orono Town, Maine	0.2094180830%
ME20	Oxford County, Maine	3.8454418782%
ME21	Penobscot County, Maine	6.7801027597%
ME22	Piscataquis County, Maine	1.2760851978%
ME23	Portland City, Maine	7.2016026249%
ME24	Rockland City, Maine	0.6184398003%
ME25	Saco City, Maine	0.4366518238%
ME26	Sagadahoc County, Maine	1.9708146889%
ME27	Sanford City, Maine	2.6908215844%
ME28	Scarborough Town, Maine	1.8363769930%
ME29	Somerset County, Maine	3.6977198467%
ME30	South Portland City, Maine	2.2275994495%
ME31	Standish Town, Maine	0.0664145731%
ME32	Waldo County, Maine	2.4723925078%
ME33	Washington County, Maine	2.6998574469%
ME34	Waterville City, Maine	2.8132809688%
ME35	Wells Town, Maine	0.2541311729%
ME36	Westbrook City, Maine	1.5416150467%
ME37	Windham Town, Maine	0.1935482073%
ME38	York County, Maine	6.7950503019%
ME39	York Town, Maine	2.1005084476%

State ID	Qualifying Subdivision	Consolidated State Allocation
MD1	Aberdeen City, Maryland	0.0372796529%
MD2	Allegany County, Maryland	1.6120411494%
MD3	Annapolis City, Maryland	0.2413230958%
MD4	Anne Arundel County, Maryland	9.5850095156%
MD5	Baltimore City, Maryland	20.9970334354%
MD6	Baltimore County, Maryland	17.7565394434%
MD7	Bel Air Town, Maryland	0.0322364280%
MD8	Berlin Town, Maryland	0.0109236186%
MD9	Bowie City, Maryland	0.0263270946%
MD10	Calvert County, Maryland	1.6948343688%
MD11	Cambridge City, Maryland	0.0196746185%
MD12	Caroline County, Maryland	0.5865017850%
MD13	Carroll County, Maryland	2.9605563001%
MD14	Cecil County, Maryland	3.7958577634%
MD15	Charles County, Maryland	1.9663409179%
MD16	Charlestown, Maryland	0.0013846587%
MD17	College Park City, Maryland	0.0050334845%
MD18	Cottage City Town, Maryland	0.0015972023%
MD19	Cumberland City, Maryland	0.1627132426%
MD20	Dorchester County, Maryland	0.3951913125%
MD21	Easton Town, Maryland	0.0630108370%
MD22	Elkton Town, Maryland	0.0884110160%
MD23	Forest Heights Town, Maryland	0.0014812182%
MD24	Frederick City, Maryland	0.1530889274%
MD25	Frederick County, Maryland	3.4957333212%
MD26	Frostburg City, Maryland	0.0194678741%
MD27	Gaithersburg City, Maryland	0.0243966914%
MD28	Garrett County, Maryland	0.3513434690%
MD29	Grantsville Town, Maryland	0.0002207076%
MD30	Greenbelt City, Maryland	0.0369938028%
MD31	Hagerstown City, Maryland	0.1829328174%
MD32	Harford County, Maryland	5.1958110720%
MD33	Havre De Grace City, Maryland	0.0458009931%
MD34	Howard County, Maryland	3.2487213744%
MD35	Hyattsville City, Maryland	0.0127377562%
MD36	Kent County, Maryland	0.4683852152%
MD37	Laurel City, Maryland	0.0300516480%
MD38	Montgomery County, Maryland	8.5574378958%
MD39	Mountain Lake Park Town, Maryland	0.0001004445%
MD40	New Carrollton City, Maryland	0.0062727689%
MD41	North Brentwood Town, Maryland	0.0000662686%
MD42	North East Town, Maryland	0.0183814522%
MD43	Oakland Town, Maryland	0.0011777453%
MD44	Perryville Town, Maryland	0.0184160785%
MD45	Prince Georges County, Maryland	7.1382650655%
MD46	Queen Annes County, Maryland	0.7381792535%
MD47	Rockville City, Maryland	0.0611045878%
MD48	Salisbury City, Maryland	0.1347806691%

State ID	Qualifying Subdivision	Consolidated State Allocation
MD49	Seat Pleasant City, Maryland	0.0040128808%
MD50	Somerset County, Maryland	0.3875128839%
MD51	St Marys County, Maryland	1.3684562511%
MD52	Takoma Park City, Maryland	0.0195596479%
MD53	Talbot County, Maryland	0.4896824850%
MD54	Upper Marlboro Town, Maryland	0.0009443695%
MD55	Vienna Town, Maryland	0.0001582676%
MD56	Washington County, Maryland	3.0474490505%
MD57	Westminster City, Maryland	0.0440087573%
MD58	Wicomico County, Maryland	1.6694422411%
MD59	Worcester County, Maryland	0.9876031064%

State ID	Qualifying Subdivision	Consolidated State Allocation
MA1	Abington Town, Massachusetts	0.2400899791%
MA2	Acton Town, Massachusetts	0.1586479343%
MA3	Acushnet Town, Massachusetts	0.1547305792%
MA4	Adams Town, Massachusetts	0.0189731986%
MA5	Agawam Town City, Massachusetts	0.4341901730%
MA6	Alford Town, Massachusetts	0.0007449491%
MA7	Amesbury Town City, Massachusetts	0.2580959424%
MA8	Amherst Town, Massachusetts	0.3675897982%
MA9	Andover Town, Massachusetts	0.7102727131%
MA10	Aquinnah Town, Massachusetts	0.0049293930%
MA11	Arlington Town, Massachusetts	0.3350233330%
MA12	Ashburnham Town, Massachusetts	0.0140160133%
MA13	Ashby Town, Massachusetts	0.0069876989%
MA14	Ashfield Town, Massachusetts	0.0027296132%
MA15	Ashland Town, Massachusetts	0.1613930923%
MA16	Athol Town, Massachusetts	0.0359559233%
MA17	Attleboro City, Massachusetts	0.9357205930%
MA18	Auburn Town, Massachusetts	0.3036683195%
MA19	Avon Town, Massachusetts	0.0739889948%
MA20	Ayer Town, Massachusetts	0.0179210686%
MA21	Barnstable County, Massachusetts	0.0639482242%
MA22	Barnstable Town City, Massachusetts	0.8578313582%
MA23	Barre Town, Massachusetts	0.0096522017%
MA24	Becket Town, Massachusetts	0.0067279376%
MA25	Bedford Town, Massachusetts	0.1982937972%
MA26	Belchertown, Massachusetts	0.3492785905%
MA27	Bellingham Town, Massachusetts	0.1961076781%
MA28	Belmont Town, Massachusetts	0.2420315678%
MA29	Berkley Town, Massachusetts	0.1212759115%
MA30	Berlin Town, Massachusetts	0.0397753511%
MA31	Bernardston Town, Massachusetts	0.0040751589%
MA32	Beverly City, Massachusetts	0.4801566147%
MA33	Billerica Town, Massachusetts	0.3870913124%
MA34	Blackstone Town, Massachusetts	0.0221473318%
MA35	Blandford Town, Massachusetts	0.0009007116%
MA36	Bolton Town, Massachusetts	0.0110088433%
MA37	Boston City, Massachusetts	10.5767780349%
MA38	Bourne Town, Massachusetts	0.3783946742%
MA39	Boxborough Town, Massachusetts	0.0399298051%
MA40	Boxford Town, Massachusetts	0.0912309051%
MA41	Boylston Town, Massachusetts	0.0562367737%
MA42	Braintree Town City, Massachusetts	0.4457226214%
MA43	Brewster Town, Massachusetts	0.1284470083%
MA44	Bridgewater Town, Massachusetts	0.0570448443%
MA45	Brimfield Town, Massachusetts	0.0355644757%

State ID	Qualifying Subdivision	Consolidated State Allocation
MA46	Bristol County, Massachusetts	0.1015083030%
MA47	Brockton City, Massachusetts	2.1170344615%
MA48	Brookfield Town, Massachusetts	0.0372953453%
MA49	Brookline Town, Massachusetts	0.8244968622%
MA50	Buckland Town, Massachusetts	0.0031396937%
MA51	Burlington Town, Massachusetts	0.3034752912%
MA52	Cambridge City, Massachusetts	4.3053779748%
MA53	Canton Town, Massachusetts	0.2909840866%
MA54	Carlisle Town, Massachusetts	0.0526144568%
MA55	Carver Town, Massachusetts	0.2179547901%
MA56	Charlemont Town, Massachusetts	0.0066765925%
MA57	Charlton Town, Massachusetts	0.0305379405%
MA58	Chatham Town, Massachusetts	0.1685335181%
MA59	Chelmsford Town, Massachusetts	0.3162632088%
MA60	Chelsea City, Massachusetts	0.5236031155%
MA61	Cheshire Town, Massachusetts	0.0015830626%
MA62	Chester Town, Massachusetts	0.0096828727%
MA63	Chesterfield Town, Massachusetts	0.0168042468%
MA64	Chicopee City, Massachusetts	0.8816952708%
MA65	Chilmark Town, Massachusetts	0.0062328576%
MA66	Clarksburg Town, Massachusetts	0.0303920178%
MA67	Clinton Town, Massachusetts	0.2371744557%
MA68	Cohasset Town, Massachusetts	0.1430861241%
MA69	Colrain Town, Massachusetts	0.0016018525%
MA70	Concord Town, Massachusetts	0.1749597704%
MA71	Conway Town, Massachusetts	0.0354590115%
MA72	Cummington Town, Massachusetts	0.0009757143%
MA73	Dalton Town, Massachusetts	0.0123034626%
MA74	Danvers Town, Massachusetts	0.4037368656%
MA75	Dartmouth Town, Massachusetts	0.5505881937%
MA76	Dedham Town, Massachusetts	0.3188835370%
MA77	Deerfield Town, Massachusetts	0.0872700035%
MA78	Dennis Town, Massachusetts	0.0970183530%
MA79	Dighton Town, Massachusetts	0.0228752705%
MA80	Douglas Town, Massachusetts	0.1659192613%
MA81	Dover Town, Massachusetts	0.0683428114%
MA82	Dracut Town, Massachusetts	0.2045887296%
MA83	Dudley Town, Massachusetts	0.0179390734%
MA84	Dukes County, Massachusetts	0.0054256244%
MA85	Dunstable Town, Massachusetts	0.0041607864%
MA86	Duxbury Town, Massachusetts	0.3742011756%
MA87	East Bridgewater Town, Massachusetts	0.2308047825%
MA88	East Brookfield Town, Massachusetts	0.0052365739%
MA89	East Longmeadow Town, Massachusetts	0.2715713403%
MA90	Eastham Town, Massachusetts	0.0786916528%

State ID	Qualifying Subdivision	Consolidated State Allocation
MA91	Easthampton Town City, Massachusetts	0.2670463228%
MA92	Easton Town, Massachusetts	0.5676857515%
MA93	Edgartown, Massachusetts	0.0809809332%
MA94	Egremont Town, Massachusetts	0.0050750540%
MA95	Erving Town, Massachusetts	0.0513752128%
MA96	Essex Town, Massachusetts	0.0113333487%
MA97	Everett City, Massachusetts	0.4368228534%
MA98	Fairhaven Town, Massachusetts	0.3265362625%
MA99	Fall River City, Massachusetts	2.1055901006%
MA100	Falmouth Town, Massachusetts	0.6632841320%
MA101	Fitchburg City, Massachusetts	0.6913634212%
MA102	Florida Town, Massachusetts	0.0170875086%
MA103	Foxborough Town, Massachusetts	0.2588100112%
MA104	Framingham Town, Massachusetts	0.6902310022%
MA105	Franklin Town City, Massachusetts	0.4506715894%
MA106	Freetown, Massachusetts	0.0347111837%
MA107	Gardner City, Massachusetts	0.3080580392%
MA108	Georgetown, Massachusetts	0.1361143365%
MA109	Gill Town, Massachusetts	0.0032293514%
MA110	Gloucester City, Massachusetts	0.4219402015%
MA111	Goshen Town, Massachusetts	0.0020598761%
MA112	Gosnold Town, Massachusetts	0.0011645031%
MA113	Grafton Town, Massachusetts	0.2787903277%
MA114	Granby Town, Massachusetts	0.1421420753%
MA115	Granville Town, Massachusetts	0.0205788719%
MA116	Great Barrington Town, Massachusetts	0.0238735954%
MA117	Greenfield Town City, Massachusetts	0.4522917084%
MA118	Groton Town, Massachusetts	0.0112861907%
MA119	Groveland Town, Massachusetts	0.0109548289%
MA120	Hadley Town, Massachusetts	0.1036658447%
MA121	Halifax Town, Massachusetts	0.0744074497%
MA122	Hamilton Town, Massachusetts	0.0148754814%
MA123	Hampden Town, Massachusetts	0.0086441416%
MA124	Hancock Town, Massachusetts	0.0080083205%
MA125	Hanover Town, Massachusetts	0.2979987927%
MA126	Hanson Town, Massachusetts	0.0306151413%
MA127	Hardwick Town, Massachusetts	0.0046489576%
MA128	Harvard Town, Massachusetts	0.1646144358%
MA129	Harwich Town, Massachusetts	0.2864309104%
MA130	Hatfield Town, Massachusetts	0.0627393895%
MA131	Haverhill City, Massachusetts	0.8142937865%
MA132	Hawley Town, Massachusetts	0.0002691301%
MA133	Heath Town, Massachusetts	0.0011790011%
MA134	Hingham Town, Massachusetts	0.4828724626%
MA135	Hinsdale Town, Massachusetts	0.0037015067%

State ID	Qualifying Subdivision	Consolidated State Allocation
MA136	Holbrook Town, Massachusetts	0.1222501079%
MA137	Holden Town, Massachusetts	0.0343745879%
MA138	Holland Town, Massachusetts	0.0238040885%
MA139	Holliston Town, Massachusetts	0.1672190621%
MA140	Holyoke City, Massachusetts	0.9664659552%
MA141	Hopedale Town, Massachusetts	0.1372305825%
MA142	Hopkinton Town, Massachusetts	0.2027514537%
MA143	Hubbardston Town, Massachusetts	0.0076647112%
MA144	Hudson Town, Massachusetts	0.1994512345%
MA145	Hull Town, Massachusetts	0.1954841045%
MA146	Huntington Town, Massachusetts	0.0026561285%
MA147	Ipswich Town, Massachusetts	0.2079635850%
MA148	Kingston Town, Massachusetts	0.1369378473%
MA149	Lakeville Town, Massachusetts	0.0202228058%
MA150	Lancaster Town, Massachusetts	0.0116656002%
MA151	Lanesborough Town, Massachusetts	0.0575248505%
MA152	Lawrence City, Massachusetts	1.4758837913%
MA153	Lee Town, Massachusetts	0.1519018348%
MA154	Leicester Town, Massachusetts	0.1926291380%
MA155	Lenox Town, Massachusetts	0.1609461124%
MA156	Leominster City, Massachusetts	0.7902530708%
MA157	Leverett Town, Massachusetts	0.0395342227%
MA158	Lexington Town, Massachusetts	0.5090924410%
MA159	Leyden Town, Massachusetts	0.0007689206%
MA160	Lincoln Town, Massachusetts	0.1099619285%
MA161	Littleton Town, Massachusetts	0.1043597104%
MA162	Longmeadow Town, Massachusetts	0.2992108201%
MA163	Lowell City, Massachusetts	1.0242474790%
MA164	Ludlow Town, Massachusetts	0.3042665608%
MA165	Lunenburg Town, Massachusetts	0.1916440550%
MA166	Lynn City, Massachusetts	1.5917595154%
MA167	Lynnfield Town, Massachusetts	0.2333154069%
MA168	Malden City, Massachusetts	0.4659742140%
MA169	Manchester-By-The-Sea Town, Massachusetts	0.0201100664%
MA170	Mansfield Town, Massachusetts	0.6816694002%
MA171	Marblehead Town, Massachusetts	0.3485912672%
MA172	Marion Town, Massachusetts	0.0698025620%
MA173	Marlborough City, Massachusetts	0.3668295136%
MA174	Marshfield Town, Massachusetts	0.4930551259%
MA175	Mashpee Town, Massachusetts	0.3459150927%
MA176	Mattapoisett Town, Massachusetts	0.0843720139%
MA177	Maynard Town, Massachusetts	0.1014940666%
MA178	Medfield Town, Massachusetts	0.2083772770%
MA179	Medford City, Massachusetts	0.3972200658%
MA180	Medway Town, Massachusetts	0.1940731867%
MA181	Melrose City, Massachusetts	0.2296395466%

State ID	Qualifying Subdivision	Consolidated State Allocation
MA182	Mendon Town, Massachusetts	0.0164096065%
MA183	Merrimac Town, Massachusetts	0.0100336001%
MA184	Methuen Town City, Massachusetts	0.7149217230%
MA185	Middleborough Town, Massachusetts	0.3933419654%
MA186	Middlefield Town, Massachusetts	0.0003252381%
MA187	Middleton Town, Massachusetts	0.0917093411%
MA188	Milford Town, Massachusetts	0.5323916620%
MA189	Millbury Town, Massachusetts	0.2332340712%
MA190	Millis Town, Massachusetts	0.0999797258%
MA191	Millville Town, Massachusetts	0.0062130209%
MA192	Milton Town, Massachusetts	0.3520463069%
MA193	Monroe Town, Massachusetts	0.0001025332%
MA194	Monson Town, Massachusetts	0.1266258006%
MA195	Montague Town, Massachusetts	0.0291412591%
MA196	Monterey Town, Massachusetts	0.0042137017%
MA197	Montgomery Town, Massachusetts	0.0002324400%
MA198	Mt Washington Town, Massachusetts	0.0001746048%
MA199	Nahant Town, Massachusetts	0.0355497159%
MA200	Nantucket Town, Massachusetts	0.1102324194%
MA201	Natick Town, Massachusetts	0.3421702489%
MA202	Needham Town, Massachusetts	0.4914063771%
MA203	New Ashford Town, Massachusetts	0.0002677169%
MA204	New Bedford City, Massachusetts	2.3617391681%
MA205	New Braintree Town, Massachusetts	0.0013480056%
MA206	New Marlborough Town, Massachusetts	0.0032940955%
MA207	New Salem Town, Massachusetts	0.0024476600%
MA208	Newbury Town, Massachusetts	0.0135400372%
MA209	Newburyport City, Massachusetts	0.2905748435%
MA210	Newton City, Massachusetts	1.0088865481%
MA211	Norfolk County, Massachusetts	0.0563017795%
MA212	Norfolk Town, Massachusetts	0.0892988423%
MA213	North Adams City, Massachusetts	0.3428675166%
MA214	North Andover Town, Massachusetts	0.4494773051%
MA215	North Attleborough Town, Massachusetts	0.6369959028%
MA216	North Brookfield Town, Massachusetts	0.0698725924%
MA217	North Reading Town, Massachusetts	0.1664230820%
MA218	Northampton City, Massachusetts	0.5405649568%
MA219	Northborough Town, Massachusetts	0.2422641125%

State ID	Qualifying Subdivision	Consolidated State Allocation
MA220	Northbridge Town, Massachusetts	0.2823159735%
MA221	Northfield Town, Massachusetts	0.0153010544%
MA222	Norton Town, Massachusetts	0.4563834066%
MA223	Norwell Town, Massachusetts	0.2753854817%
MA224	Norwood Town, Massachusetts	0.3412282413%
MA225	Oak Bluffs Town, Massachusetts	0.0769116887%
MA226	Oakham Town, Massachusetts	0.0026269230%
MA227	Orange Town, Massachusetts	0.1376712816%
MA228	Orleans Town, Massachusetts	0.0935051641%
MA229	Otis Town, Massachusetts	0.0035269019%
MA230	Oxford Town, Massachusetts	0.2336229019%
MA231	Palmer Town City, Massachusetts	0.1621757259%
MA232	Paxton Town, Massachusetts	0.0115100470%
MA233	Peabody City, Massachusetts	0.7162928627%
MA234	Pelham Town, Massachusetts	0.0235476246%
MA235	Pembroke Town, Massachusetts	0.3388218249%
MA236	Pepperell Town, Massachusetts	0.0102363113%
MA237	Peru Town, Massachusetts	0.0011523603%
MA238	Petersham Town, Massachusetts	0.0159775433%
MA239	Phillipston Town, Massachusetts	0.0039835646%
MA240	Pittsfield City, Massachusetts	1.1541979937%
MA241	Plainfield Town, Massachusetts	0.0004986914%
MA242	Plainville Town, Massachusetts	0.0738004154%
MA243	Plymouth County, Massachusetts	0.0008974666%
MA244	Plymouth Town, Massachusetts	1.0727134492%
MA245	Plympton Town, Massachusetts	0.0311939123%
MA246	Princeton Town, Massachusetts	0.0094015998%
MA247	Provincetown, Massachusetts	0.0895015011%
MA248	Quincy City, Massachusetts	1.0277365393%
MA249	Randolph Town, Massachusetts	0.3517891103%
MA250	Raynham Town, Massachusetts	0.0739771661%
MA251	Reading Town, Massachusetts	0.2463903024%
MA252	Rehoboth Town, Massachusetts	0.0342848256%
MA253	Revere City, Massachusetts	0.5754964378%
MA254	Richmond Town, Massachusetts	0.0346755405%
MA255	Rochester Town, Massachusetts	0.0656757963%
MA256	Rockland Town, Massachusetts	0.3048431858%
MA257	Rockport Town, Massachusetts	0.1188536886%
MA258	Rowe Town, Massachusetts	0.0242459391%
MA259	Rowley Town, Massachusetts	0.0134543050%
MA260	Royalston Town, Massachusetts	0.0020739031%
MA261	Russell Town, Massachusetts	0.0012348998%
MA262	Rutland Town, Massachusetts	0.0122272562%
MA263	Salem City, Massachusetts	0.6254547137%
MA264	Salisbury Town, Massachusetts	0.0319290215%
MA265	Sandisfield Town, Massachusetts	0.0020719142%
MA266	Sandwich Town, Massachusetts	0.4944903815%
MA267	Saugus Town, Massachusetts	0.3330802265%
MA268	Savoy Town, Massachusetts	0.0103246605%

State ID	Qualifying Subdivision	Consolidated State Allocation
MA269	Scituate Town, Massachusetts	0.3938536371%
MA270	Seekonk Town, Massachusetts	0.3325159013%
MA271	Sharon Town, Massachusetts	0.3157804286%
MA272	Sheffield Town, Massachusetts	0.0066580643%
MA273	Shelburne Town, Massachusetts	0.0145706034%
MA274	Sherborn Town, Massachusetts	0.0361347676%
MA275	Shirley Town, Massachusetts	0.0049654026%
MA276	Shrewsbury Town, Massachusetts	0.6471205738%
MA277	Shutesbury Town, Massachusetts	0.0358178516%
MA278	Somerset Town, Massachusetts	0.2943717652%
MA279	Somerville City, Massachusetts	0.5538327759%
MA280	South Hadley Town, Massachusetts	0.3289508962%
MA281	Southampton Town, Massachusetts	0.0773861993%
MA282	Southborough Town, Massachusetts	0.2173688486%
MA283	Southbridge Town City, Massachusetts	0.2906114812%
MA284	Southwick Town, Massachusetts	0.0165255910%
MA285	Spencer Town, Massachusetts	0.0203153945%
MA286	Springfield City, Massachusetts	3.4410224370%
MA287	Sterling Town, Massachusetts	0.0196759620%
MA288	Stockbridge Town, Massachusetts	0.0092305018%
MA289	Stoneham Town, Massachusetts	0.1669780908%
MA290	Stoughton Town, Massachusetts	0.3118943726%
MA291	Stow Town, Massachusetts	0.0087733680%
MA292	Sturbridge Town, Massachusetts	0.1235688557%
MA293	Sudbury Town, Massachusetts	0.1950193814%
MA294	Sunderland Town, Massachusetts	0.0394445127%
MA295	Sutton Town, Massachusetts	0.1720631416%
MA296	Swampscott Town, Massachusetts	0.2802270489%
MA297	Swansea Town, Massachusetts	0.3127370397%
MA298	Taunton City, Massachusetts	1.3156698571%
MA299	Templeton Town, Massachusetts	0.0167725290%
MA300	Tewksbury Town, Massachusetts	0.2526508477%
MA301	Tisbury Town, Massachusetts	0.0665566713%
MA302	Tolland Town, Massachusetts	0.0005593530%
MA303	Topsfield Town, Massachusetts	0.0713350646%
MA304	Townsend Town, Massachusetts	0.0093843801%
MA305	Truro Town, Massachusetts	0.0604250384%
MA306	Tyngsborough Town, Massachusetts	0.1162396935%
MA307	Tyringham Town, Massachusetts	0.0012803829%
MA308	Upton Town, Massachusetts	0.0211017442%
MA309	Uxbridge Town, Massachusetts	0.2255606716%
MA310	Wakefield Town, Massachusetts	0.2116065761%
MA311	Wales Town, Massachusetts	0.0147604390%
MA312	Walpole Town, Massachusetts	0.3194149930%

State ID	Qualifying Subdivision	Consolidated State Allocation
MA313	Waltham City, Massachusetts	0.5322671985%
MA314	Ware Town, Massachusetts	0.2035588439%
MA315	Wareham Town, Massachusetts	0.3595394490%
MA316	Warren Town, Massachusetts	0.0179304373%
MA317	Warwick Town, Massachusetts	0.0065997057%
MA318	Washington Town, Massachusetts	0.0004074112%
MA319	Watertown Town City, Massachusetts	0.2540965713%
MA320	Wayland Town, Massachusetts	0.2147389946%
MA321	Webster Town, Massachusetts	0.2405963644%
MA322	Wellesley Town, Massachusetts	0.4811483972%
MA323	Wellfleet Town, Massachusetts	0.0667808417%
MA324	Wendell Town, Massachusetts	0.0010508215%
MA325	Wenham Town, Massachusetts	0.0112119209%
MA326	West Boylston Town, Massachusetts	0.1222726663%
MA327	West Bridgewater Town, Massachusetts	0.1467598909%
MA328	West Brookfield Town, Massachusetts	0.0059191866%
MA329	West Newbury Town, Massachusetts	0.0086981560%
MA330	West Springfield Town City, Massachusetts	0.4627594653%
MA331	West Stockbridge Town, Massachusetts	0.0028401544%
MA332	West Tisbury Town, Massachusetts	0.0099183484%
MA333	Westborough Town, Massachusetts	0.5070384269%
MA334	Westfield City, Massachusetts	0.6538385669%
MA335	Westford Town, Massachusetts	0.2939962811%
MA336	Westhampton Town, Massachusetts	0.0199373981%
MA337	Westminster Town, Massachusetts	0.0226744436%
MA338	Weston Town, Massachusetts	0.2254658323%
MA339	Westport Town, Massachusetts	0.2811335179%
MA340	Westwood Town, Massachusetts	0.2903783084%
MA341	Weymouth Town City, Massachusetts	0.5656639786%
MA342	Whately Town, Massachusetts	0.0314223222%
MA343	Whitman Town, Massachusetts	0.0448742719%
MA344	Wilbraham Town, Massachusetts	0.0313150261%
MA345	Williamsburg Town, Massachusetts	0.0343998679%
MA346	Williamstown, Massachusetts	0.0783021941%
MA347	Wilmington Town, Massachusetts	0.2467559990%
MA348	Winchendon Town, Massachusetts	0.1830720373%
MA349	Winchester Town, Massachusetts	0.2570095300%

State ID	Qualifying Subdivision	Consolidated State Allocation
MA350	Windsor Town, Massachusetts	0.0005238144%
MA351	Winthrop Town City, Massachusetts	0.1505890537%
MA352	Woburn City, Massachusetts	0.3503541163%
MA353	Worcester City, Massachusetts	3.7929503518%
MA354	Worthington Town, Massachusetts	0.0015069609%
MA355	Wrentham Town, Massachusetts	0.0961794021%
MA356	Yarmouth Town, Massachusetts	0.1308391883%

State ID	Qualifying Subdivision	Consolidated State Allocation
MI1	Ada Township, Michigan	0.0042278554%
MI2	Adrian City, Michigan	0.0328126789%
MI3	Alcona County, Michigan	0.0934629817%
MI4	Alger County, Michigan	0.0879525875%
MI5	Algoma Township, Michigan	0.0016941585%
MI6	Allegan County, Michigan	0.4460242903%
MI7	Allen Park City, Michigan	0.0620457416%
MI8	Allendale Charter Township, Michigan	0.0044901249%
MI9	Alpena County, Michigan	0.3552566921%
MI10	Alpine Charter Township, Michigan	0.0014679355%
MI11	Ann Arbor City, Michigan	0.2674253148%
MI12	Antrim County, Michigan	0.2666725680%
MI13	Antwerp Township, Michigan	0.0007581775%
MI14	Arenac County, Michigan	0.1805504304%
MI15	Auburn Hills City, Michigan	0.0679438259%
MI16	Bangor Charter Township, Michigan	0.0063071908%
MI17	Baraga County, Michigan	0.0830045795%
MI18	Barry County, Michigan	0.2499588316%
MI19	Bath Charter Township, Michigan	0.0310575579%
MI20	Battle Creek City, Michigan	0.1976545014%
MI21	Bay City, Michigan	0.0662640083%
MI22	Bay County, Michigan	1.1889740912%
MI23	Bedford Township, Michigan	0.0238194433%
MI24	Benton Charter Township, Michigan	0.0523760917%
MI25	Benzie County, Michigan	0.1559708495%
MI26	Berkley City, Michigan	0.0207220905%
MI27	Berrien County, Michigan	1.4353008205%
MI28	Beverly Hills Village, Michigan	0.0265585450%
MI29	Big Rapids City, Michigan	0.0141485793%
MI30	Birmingham City, Michigan	0.0595211261%
MI278	Blackman Charter Township, Michigan	0.0000000000%
MI31	Bloomfield Charter Township, Michigan	0.1382971973%
MI32	Branch County, Michigan	0.3823019725%
MI33	Brandon Charter Township, Michigan	0.0172309269%
MI34	Brighton Township, Michigan	0.0005844508%
MI35	Brownstown Charter Township, Michigan	0.0597655290%
MI36	Burton City, Michigan	0.0191573337%
MI37	Byron Township, Michigan	0.0082898139%
MI38	Cadillac City, Michigan	0.0572782844%
MI39	Caledonia Charter Township, Kent County, Michigan	0.0026644035%

State ID	Qualifying Subdivision	Consolidated State Allocation
MI40	Calhoun County, Michigan	1.7844560932%
MI41	Cannon Township, Michigan	0.0031972842%
MI42	Canton Charter Township, Michigan	0.2635380816%
MI43	Cascade Charter Township, Michigan	0.0117082940%
MI44	Cass County, Michigan	0.4127454052%
MI45	Charlevoix County, Michigan	0.2142857345%
MI46	Cheboygan County, Michigan	0.3054122146%
MI47	Chesterfield Charter Township, Michigan	0.1219762582%
MI48	Chippewa County, Michigan	0.2775926422%
MI49	Clare County, Michigan	0.2705014687%
MI50	Clawson City, Michigan	0.0134773906%
MI51	Clinton Charter Township, Michigan	0.6524315825%
MI52	Clinton County, Michigan	0.5402667258%
MI53	Coldwater City, Michigan	0.0074666730%
MI54	Commerce Charter Township, Michigan	0.0192121087%
MI55	Comstock Charter Township, Michigan	0.0081656838%
MI56	Cooper Charter Township, Michigan	0.0009266020%
MI57	Crawford County, Michigan	0.2886252314%
MI58	Davison Township, Michigan	0.0085451532%
MI59	Dearborn City, Michigan	0.2895118016%
MI60	Dearborn Heights City, Michigan	0.1017944247%
MI61	Delhi Charter Township, Michigan	0.0190090980%
MI62	Delta Charter Township, Michigan	0.0391807240%
MI63	Delta County, Michigan	0.2697501609%
MI64	Detroit City, Michigan	7.3863527308%
MI65	Dewitt Charter Township, Michigan	0.0355251274%
MI66	Dickinson County, Michigan	0.2772928270%
MI67	East Bay Township, Michigan	0.0014150822%
MI68	East Grand Rapids City, Michigan	0.0200332982%
MI69	East Lansing City, Michigan	0.1928772515%
MI70	Eastpointe City, Michigan	0.1620457585%
MI71	Eaton County, Michigan	1.0040379149%
MI72	Egelston Township, Michigan	0.0057198661%
MI73	Emmet County, Michigan	0.1751859110%
MI74	Emmett Charter Township, Michigan	0.0078634499%
MI75	Escanaba City, Michigan	0.0187485817%
MI76	Farmington City, Michigan	0.0212789632%
MI77	Farmington Hills City, Michigan	0.1595279696%
MI78	Fenton Charter Township, Michigan	0.0017899625%

State ID	Qualifying Subdivision	Consolidated State Allocation
MI79	Fenton City, Michigan	0.0463367531%
MI80	Ferndale City, Michigan	0.0860957347%
MI81	Flat Rock City, Michigan	0.0165965372%
MI82	Flint Charter Township, Michigan	0.0247094958%
MI83	Flint City, Michigan	2.8492826162%
MI84	Flushing Charter Township, Michigan	0.0036163716%
MI85	Fort Gratiot Charter Township, Michigan	0.0091219411%
MI86	Fraser City, Michigan	0.0773787868%
MI87	Frenchtown Charter Township, Michigan	0.0472286300%
MI88	Fruitport Charter Township, Michigan	0.0124893804%
MI89	Gaines Township, Kent County, Michigan	0.0086869609%
MI90	Garden City, Michigan	0.0348032319%
MI91	Garfield Charter Township, Michigan	0.0003928875%
MI92	Genesee Charter Township, Michigan	0.0125078610%
MI93	Genesee County, Michigan	2.1444091585%
MI94	Genoa Township, Michigan	0.0000730563%
MI95	Georgetown Charter Township, Michigan	0.0069588066%
MI96	Gladwin County, Michigan	0.2077497604%
MI97	Gogebic County, Michigan	0.0721438406%
MI98	Grand Blanc Charter Township, Michigan	0.0202728576%
MI99	Grand Haven Charter Township, Michigan	0.0108943696%
MI100	Grand Haven City, Michigan	0.0335954698%
MI101	Grand Rapids Charter Township, Michigan	0.0036296214%
MI102	Grand Rapids City, Michigan	1.3440305744%
MI103	Grand Traverse County, Michigan	0.9563577517%
MI104	Grandville City, Michigan	0.0268602038%
MI105	Gratiot County, Michigan	0.3525171058%
MI106	Green Oak Township, Michigan	0.0310802595%
MI107	Grosse Ile Township, Michigan	0.0206969233%
MI108	Grosse Pointe Park City, Michigan	0.0273525288%
MI109	Grosse Pointe Woods City, Michigan	0.0194917954%
MI110	Hamburg Township, Michigan	0.0327814289%
MI111	Hamtramck City, Michigan	0.1045696825%
MI112	Harper Woods City, Michigan	0.0291877050%
MI113	Harrison Charter Township, Michigan	0.1197690060%
MI114	Hartland Township, Michigan	0.0002817888%

State ID	Qualifying Subdivision	Consolidated State Allocation
MI115	Hazel Park City, Michigan	0.0425097355%
MI116	Highland Charter Township, Michigan	0.0169953269%
MI117	Highland Park City, Michigan	0.0226020911%
MI118	Hillsdale County, Michigan	0.4179676993%
MI119	Holland Charter Township, Michigan	0.0168424444%
MI120	Holland City, Michigan	0.0955964916%
MI121	Holly Township, Michigan	0.0023667091%
MI122	Houghton County, Michigan	0.2492719347%
MI123	Huron Charter Township, Michigan	0.0404726791%
MI124	Huron County, Michigan	0.1691383539%
MI125	Independence Charter Township, Michigan	0.0476500991%
MI126	Ingham County, Michigan	2.3910799665%
MI127	Inkster City, Michigan	0.0963789326%
MI128	Ionia City, Michigan	0.0259372614%
MI129	Ionia County, Michigan	0.5298085345%
MI130	Iosco County, Michigan	0.3597971837%
MI131	Iron County, Michigan	0.1234778574%
MI132	Iron Mountain City, Michigan	0.0102890396%
MI133	Isabella County, Michigan	0.6406627159%
MI134	Jackson City, Michigan	0.1975960490%
MI135	Jackson County, Michigan	0.6266962818%
MI136	Kalamazoo Charter Township, Michigan	0.0300335110%
MI137	Kalamazoo City, Michigan	0.2186435127%
MI138	Kalamazoo County, Michigan	2.1433241424%
MI139	Kalkaska County, Michigan	0.0950485976%
MI140	Kent County, Michigan	3.0032910409%
MI141	Kentwood City, Michigan	0.0821691991%
MI142	Keweenaw County, Michigan	0.0039070602%
MI143	Lake County, Michigan	0.0815750583%
MI144	Lansing City, Michigan	0.6157258774%
MI145	Lapeer County, Michigan	0.4570551035%
MI146	Leelanau County, Michigan	0.1385869050%
MI147	Lenawee County, Michigan	0.8823790089%
MI148	Lenox Township, Michigan	0.0064611477%
MI149	Leoni Township, Michigan	0.0052492697%
MI150	Lincoln Charter Township, Michigan	0.0103038346%
MI151	Lincoln Park City, Michigan	0.0917234908%
MI152	Livingston County, Michigan	1.4441655813%
MI153	Livonia City, Michigan	0.4479739512%
MI154	Luce County, Michigan	0.0715137120%
MI155	Lyon Charter Township, Michigan	0.0034804545%
MI156	Mackinac County, Michigan	0.0525087280%
MI157	Macomb County, Michigan	8.9600697690%

State ID	Qualifying Subdivision	Consolidated State Allocation
MI158	Macomb Township, Michigan	0.0624612667%
MI159	Madison Heights City, Michigan	0.0833167256%
MI160	Manistee County, Michigan	0.3495467119%
MI161	Marion Township, Livingston County, Michigan	0.0001148028%
MI162	Marquette City, Michigan	0.0180973752%
MI163	Marquette County, Michigan	0.6035272233%
MI164	Mason County, Michigan	0.2785769407%
MI165	Mecosta County, Michigan	0.1917457546%
MI166	Melvindale City, Michigan	0.0300027854%
MI167	Menominee County, Michigan	0.0912256468%
MI168	Meridian Charter Township, Michigan	0.0408752583%
MI169	Midland City, Michigan	0.1745254871%
MI170	Midland County, Michigan	0.3108652798%
MI171	Milford Charter Township, Michigan	0.0037106999%
MI172	Missaukee County, Michigan	0.0578937210%
MI173	Monitor Charter Township, Michigan	0.0025502597%
MI174	Monroe Charter Township, Michigan	0.0069121111%
MI175	Monroe City, Michigan	0.1213473624%
MI176	Monroe County, Michigan	1.7767045087%
MI177	Montcalm County, Michigan	0.6957831869%
MI178	Montmorency County, Michigan	0.0985847841%
MI179	Mount Clemens City, Michigan	0.0290390165%
MI180	Mount Morris Charter Township, Michigan	0.0143743799%
MI181	Mount Pleasant City, Michigan	0.0206549613%
MI182	Mundy Charter Township, Michigan	0.0087055516%
MI183	Muskegon Charter Township, Michigan	0.0208333463%
MI184	Muskegon City, Michigan	0.1009248080%
MI185	Muskegon County, Michigan	1.9100367830%
MI186	Muskegon Heights City, Michigan	0.0288916451%
MI187	New Baltimore City, Michigan	0.0277364435%
MI188	Newaygo County, Michigan	0.5231811022%
MI189	Niles City, Michigan	0.0336753397%
MI190	Niles Township, Michigan	0.0124323128%
MI191	Northville Charter Township, Michigan	0.0937410207%
MI192	Norton Shores City, Michigan	0.0405173975%
MI193	Novi City, Michigan	0.0846232347%
MI194	Oak Park City, Michigan	0.0599120079%
MI195	Oakland Charter Township, Michigan	0.0158387451%
MI196	Oakland County, Michigan	6.0626269110%

State ID	Qualifying Subdivision	Consolidated State Allocation
MI197	Oceana County, Michigan	0.2437641356%
MI198	Oceola Township, Michigan	0.0002087325%
MI199	Ogemaw County, Michigan	0.6231250992%
MI200	Ontonagon County, Michigan	0.0564870701%
MI201	Orion Charter Township, Michigan	0.0279774995%
MI202	Osceola County, Michigan	0.2155121164%
MI203	Oscoda County, Michigan	0.0566748663%
MI204	Oshtemo Charter Township, Michigan	0.0071811704%
MI205	Otsego County, Michigan	0.3179204956%
MI206	Ottawa County, Michigan	0.8561297014%
MI207	Owosso City, Michigan	0.0346613348%
MI208	Oxford Charter Township, Michigan	0.0127384634%
MI209	Park Township, Ottawa County, Michigan	0.0040071188%
MI210	Pittsfield Charter Township, Michigan	0.0274648128%
MI211	Plainfield Charter Township, Michigan	0.0085009554%
MI212	Plymouth Charter Township, Michigan	0.0357383127%
MI213	Pontiac City, Michigan	0.3248498872%
MI214	Port Huron Charter Township, Michigan	0.0083327500%
MI215	Port Huron City, Michigan	0.1504374166%
MI216	Portage City, Michigan	0.0567022991%
MI217	Presque Isle County, Michigan	0.1629846266%
MI218	Redford Charter Township, Michigan	0.1223763279%
MI219	Riverview City, Michigan	0.0278625766%
MI220	Rochester City, Michigan	0.0230459632%
MI221	Rochester Hills City, Michigan	0.0390185719%
MI222	Romulus City, Michigan	0.1043054243%
MI223	Roscommon County, Michigan	0.4301835283%
MI224	Roseville City, Michigan	0.2467127304%
MI225	Royal Oak City, Michigan	0.1498737243%
MI226	Saginaw Charter Township, Michigan	0.0399524841%
MI227	Saginaw City, Michigan	0.2486892685%
MI228	Saginaw County, Michigan	1.8697499899%
MI229	Sanilac County, Michigan	0.3884583961%
MI230	Sault Ste. Marie City, Michigan	0.1102861372%
MI231	Schoolcraft County, Michigan	0.0455825815%
MI232	Scio Charter Township, Michigan	0.0029747576%
MI233	Shelby Charter Township, Michigan	0.2924370238%
MI234	Shiawassee County, Michigan	0.8126038392%

State ID	Qualifying Subdivision	Consolidated State Allocation
MI235	South Lyon City, Michigan	0.0149498906%
MI236	Southfield City, Michigan	0.2271237501%
MI237	Southfield Township, Michigan	0.0000642545%
MI238	Southgate City, Michigan	0.0512897499%
MI239	Spring Lake Township, Michigan	0.0060017466%
MI240	Springfield Charter Township, Michigan	0.0025808909%
MI241	St Clair County, Michigan	2.2355263751%
MI242	St Joseph County, Michigan	0.2462634133%
MI243	St. Clair Shores City, Michigan	0.1962330188%
MI244	Sterling Heights City, Michigan	1.0160154348%
MI245	Sturgis City, Michigan	0.0345993898%
MI246	Summit Township, Jackson County, Michigan	0.0084993840%
MI247	Superior Charter Township, Michigan	0.0069991428%
MI248	Taylor City, Michigan	0.2173451175%
MI249	Texas Charter Township, Michigan	0.0030056684%
MI250	Thomas Township, Michigan	0.0073384407%
MI251	Traverse City, Michigan	0.0694748526%
MI252	Trenton City, Michigan	0.0278175688%
MI253	Troy City, Michigan	0.1362571155%
MI254	Tuscola County, Michigan	0.4964108264%
MI255	Tyrone Township, Livingston County, Michigan	0.0055627194%
MI256	Union Charter Township, Michigan	0.0000295731%
MI257	Van Buren Charter Township, Michigan	0.0769291242%
MI258	Van Buren County, Michigan	0.4404295489%
MI259	Vienna Charter Township, Genesee County, Michigan	0.0049907472%
MI260	Walker City, Michigan	0.0333201255%
MI261	Warren City, Michigan	1.2684334598%
MI262	Washington Township, Macomb County, Michigan	0.0466960473%
MI263	Washtenaw County, Michigan	2.6615283392%
MI264	Waterford Charter Township, Michigan	0.1262119884%
MI265	Wayne City, Michigan	0.0938477408%
MI266	Wayne County, Michigan	11.4087490300%
MI267	West Bloomfield Charter Township, Michigan	0.1514104788%
MI268	Westland City, Michigan	0.3653115305%
MI269	Wexford County, Michigan	0.3345380363%
MI270	White Lake Charter Township, Michigan	0.0337978902%
MI271	Wixom City, Michigan	0.0213271541%

State ID	Qualifying Subdivision	Consolidated State Allocation
MI272	Woodhaven City, Michigan	0.0330180645%
MI273	Wyandotte City, Michigan	0.0563902282%
MI274	Wyoming City, Michigan	0.1474722212%
MI275	Ypsilanti Charter Township, Michigan	0.0334144094%
MI276	Ypsilanti City, Michigan	0.0518771364%
MI277	Zeeland Charter Township, Michigan	0.0035509487%

State ID	Qualifying Subdivision	Consolidated State Allocation
MN1	Aitkin County, Minnesota	0.5760578506%
MN4	Andover City, Minnesota	0.1364919451%
MN6	Anoka County, Minnesota	5.0386504681%
MN7	Apple Valley City, Minnesota	0.2990817345%
MN10	Becker County, Minnesota	0.6619330684%
MN11	Beltrami County, Minnesota	0.7640787093%
MN13	Benton County, Minnesota	0.6440948102%
MN15	Big Stone County, Minnesota	0.1194868775%
MN16	Blaine City, Minnesota	0.4249516913%
MN17	Bloomington City, Minnesota	0.4900195550%
MN18	Blue Earth County, Minnesota	0.6635420705%
MN20	Brooklyn Center City, Minnesota	0.1413853902%
MN21	Brooklyn Park City, Minnesota	0.2804136235%
MN22	Brown County, Minnesota	0.3325325416%
MN24	Burnsville City, Minnesota	0.5135361297%
MN25	Carlton County, Minnesota	0.9839591749%
MN26	Carver County, Minnesota	1.1452829660%
MN27	Cass County, Minnesota	0.8895681513%
MN31	Chippewa County, Minnesota	0.2092611794%
MN32	Chisago County, Minnesota	0.9950193750%
MN33	Clay County, Minnesota	0.9428475282%
MN34	Clearwater County, Minnesota	0.1858592043%
MN37	Cook County, Minnesota	0.1074594960%
MN38	Coon Rapids City, Minnesota	0.5772642445%
MN39	Cottage Grove City, Minnesota	0.2810994719%
MN40	Cottonwood County, Minnesota	0.1739065270%
MN41	Crow Wing County, Minnesota	1.1394859175%
MN43	Dakota County, Minnesota	4.4207140603%
MN44	Dodge County, Minnesota	0.2213963258%
MN45	Douglas County, Minnesota	0.6021779472%
MN46	Duluth City, Minnesota	1.1502115380%
MN47	Eagan City, Minnesota	0.3657951576%
MN49	Eden Prairie City, Minnesota	0.2552171573%
MN50	Edina City, Minnesota	0.1973054822%
MN54	Faribault County, Minnesota	0.2169409335%
MN57	Fillmore County, Minnesota	0.2329591105%
MN59	Freeborn County, Minnesota	0.3507169824%
MN62	Goodhue County, Minnesota	0.5616542387%
MN64	Grant County, Minnesota	0.0764556498%
MN67	Hennepin County, Minnesota	19.0624622262%
MN70	Houston County, Minnesota	0.3099019273%
MN71	Hubbard County, Minnesota	0.4582368775%
MN74	Inver Grove Heights City, Minnesota	0.2193400520%
MN75	Isanti County, Minnesota	0.7712992708%
MN76	Itasca County, Minnesota	1.1406408131%
MN77	Jackson County, Minnesota	0.1408950444%
MN78	Kanabec County, Minnesota	0.3078966750%
MN79	Kandiyohi County, Minnesota	0.1581167542%

State ID	Qualifying Subdivision	Consolidated State Allocation
MN80	Kittson County, Minnesota	0.0812834506%
MN81	Koochiching County, Minnesota	0.2612581866%
MN82	Lac Qui Parle County, Minnesota	0.0985665133%
MN83	Lake County, Minnesota	0.1827750321%
MN84	Lake of the Woods County, Minnesota	0.1123105028%
MN85	Lakeville City, Minnesota	0.2822249627%
MN86	Le Sueur County, Minnesota	0.3225703347%
MN87	Lincoln County, Minnesota	0.1091919984%
MN90	Lyon County, Minnesota	0.2935118186%
MN91	Mahnomen County, Minnesota	0.1416417688%
MN92	Mankato City, Minnesota	0.3698584321%
MN93	Maple Grove City, Minnesota	0.1814019047%
MN94	Maplewood City, Minnesota	0.1875101678%
MN96	Marshall County, Minnesota	0.1296352091%
MN97	Martin County, Minnesota	0.2543064014%
MN98	McLeod County, Minnesota	0.1247104518%
MN99	Meeker County, Minnesota	0.3744031515%
MN101	Mille Lacs County, Minnesota	0.9301506696%
MN102	Minneapolis City, Minnesota	4.8777618689%
MN103	Minnetonka City, Minnesota	0.1967231071%
MN105	Moorhead City, Minnesota	0.4337377038%
MN106	Morrison County, Minnesota	0.7178981419%
MN108	Mower County, Minnesota	0.5801769149%
MN109	Murray County, Minnesota	0.1348775389%
MN113	Nicollet County, Minnesota	0.1572381053%
MN114	Nobles County, Minnesota	0.1562005112%
MN115	Norman County, Minnesota	0.1087596675%
MN118	North St. Paul City, Minnesota	0.0575844069%
MN121	Olmsted County, Minnesota	1.9236715095%
MN123	Otter Tail County, Minnesota	0.8336175419%
MN125	Pennington County, Minnesota	0.3082576395%
MN126	Pine County, Minnesota	0.5671222707%
MN127	Pipestone County, Minnesota	0.1535154503%
MN128	Plymouth City, Minnesota	0.1762541473%
MN129	Polk County, Minnesota	0.8654291474%
MN130	Pope County, Minnesota	0.1870129873%
MN132	Proctor City, Minnesota	0.0214374128%
MN134	Ramsey County, Minnesota	7.1081424150%
MN135	Red Lake County, Minnesota	0.0532649128%
MN137	Redwood County, Minnesota	0.2809842367%
MN138	Renville County, Minnesota	0.2706888807%
MN139	Rice County, Minnesota	0.2674764398%
MN140	Richfield City, Minnesota	0.2534018444%
MN142	Rochester City, Minnesota	0.7363082849%
MN143	Rock County, Minnesota	0.2043437336%
MN145	Roseau County, Minnesota	0.2517872793%
MN147	Roseville City, Minnesota	0.1721905549%
MN150	Savage City, Minnesota	0.1883576635%

State ID	Qualifying Subdivision	Consolidated State Allocation
MN151	Scott County, Minnesota	1.3274301646%
MN152	Shakopee City, Minnesota	0.2879873611%
MN153	Sherburne County, Minnesota	1.2543449472%
MN155	Sibley County, Minnesota	0.2393480708%
MN157	St Louis County, Minnesota	4.7407767170%
MN158	St. Cloud City, Minnesota	0.7330089009%
MN159	St. Louis Park City, Minnesota	0.1476314588%
MN161	St. Paul City, Minnesota	3.7475206798%
MN163	Stearns County, Minnesota	2.4158085321%
MN164	Steele County, Minnesota	0.3969975263%
MN165	Stevens County, Minnesota	0.1439474275%
MN167	Swift County, Minnesota	0.1344167568%
MN168	Todd County, Minnesota	0.4180909817%
MN169	Traverse County, Minnesota	0.0903964134%
MN172	Wabasha County, Minnesota	0.3103038997%
MN174	Wadena County, Minnesota	0.2644094337%
MN175	Waseca County, Minnesota	0.2857912156%
MN176	Washington County, Minnesota	3.0852862513%
MN177	Watonwan County, Minnesota	0.1475626356%
MN181	Wilkin County, Minnesota	0.0937962507%
MN184	Winona County, Minnesota	0.7755267356%
MN185	Woodbury City, Minnesota	0.4677270172%
MN187	Wright County, Minnesota	1.6985269385%
MN188	Yellow Medicine County, Minnesota	0.1742264836%

State ID	Qualifying Subdivision	Consolidated State Allocation
MS1	Adams County, Mississippi	0.8956930256%
MS2	Alcorn County, Mississippi	0.0576362452%
MS3	Amite County, Mississippi	0.2746164929%
MS4	Amory City, Mississippi	0.2116793450%
MS5	Arcola Town, Mississippi	0.0010556367%
MS6	Attala County, Mississippi	0.4297756502%
MS7	Bay St. Louis City, Mississippi	0.0311287683%
MS8	Benton County, Mississippi	0.1960984974%
MS9	Biloxi City, Mississippi	0.6645430129%
MS10	Bolivar County, Mississippi	0.5038616841%
MS11	Brandon City, Mississippi	0.5570720591%
MS12	Brookhaven City, Mississippi	0.4683584117%
MS13	Byram City, Mississippi	0.0546025247%
MS14	Caledonia Town, Mississippi	0.0029950314%
MS15	Calhoun County, Mississippi	0.4153642017%
MS16	Canton City, Mississippi	0.3608383968%
MS17	Carroll County, Mississippi	0.2031873312%
MS18	Charleston City, Mississippi	0.0470339459%
MS19	Chickasaw County, Mississippi	0.5109289507%
MS21	Claiborne County, Mississippi	0.1646839236%
MS22	Clarke County, Mississippi	0.5114179153%
MS23	Clarksdale City, Mississippi	0.2773833408%
MS24	Clay County, Mississippi	0.1860006383%
MS25	Cleveland City, Mississippi	0.1374693414%
MS26	Clinton City, Mississippi	0.3236377422%
MS27	Coahoma County, Mississippi	0.4236538797%
MS28	Columbia City, Mississippi	0.1695070569%
MS29	Columbus City, Mississippi	0.7040334045%
MS30	Copiah County, Mississippi	0.7218083365%
MS31	Corinth City, Mississippi	1.5766265587%
MS32	Covington County, Mississippi	0.6154970684%
MS33	Desoto County, Mississippi	2.2451071357%
MS34	Diamondhead City, Mississippi	0.0001700675%
MS35	D'Iberville City, Mississippi	0.0448052883%
MS36	Forrest County, Mississippi	3.0519047573%
MS37	Franklin County, Mississippi	0.2573415560%
MS38	Gautier City, Mississippi	0.1317718341%
MS39	George County, Mississippi	1.0370803395%
MS40	Greene County, Mississippi	0.2945486312%
MS41	Greenville City, Mississippi	0.0840582768%
MS42	Greenwood City, Mississippi	0.5924200813%
MS43	Grenada City, Mississippi	0.0559331010%
MS44	Grenada County, Mississippi	0.5257141196%
MS45	Gulfport City, Mississippi	8.3397025495%
MS46	Hancock County, Mississippi	2.4053819819%
MS47	Harrison County, Mississippi	1.2833704733%
MS48	Hattiesburg City, Mississippi	0.3234604308%
MS49	Hernando City, Mississippi	0.4422243258%
MS50	Hinds County, Mississippi	2.0886225058%

State ID	Qualifying Subdivision	Consolidated State Allocation
MS51	Holly Springs City, Mississippi	0.1628357363%
MS52	Holmes County, Mississippi	0.3324473362%
MS53	Horn Lake City, Mississippi	0.6520350689%
MS54	Humphreys County, Mississippi	0.1373820850%
MS55	Indianola City, Mississippi	0.0232047435%
MS56	Issaquena County, Mississippi	0.0175702913%
MS57	Itawamba County, Mississippi	1.0517575083%
MS58	Iuka City, Mississippi	0.2854580062%
MS59	Jackson City, Mississippi	2.6937777267%
MS60	Jackson County, Mississippi	7.6559251195%
MS61	Jasper County, Mississippi	0.3922495132%
MS62	Jefferson County, Mississippi	0.0985248779%
MS63	Jefferson Davis County, Mississippi	0.3514408929%
MS64	Jones County, Mississippi	2.2234728410%
MS65	Jonestown, Mississippi	0.0093341195%
MS66	Kemper County, Mississippi	0.2223493091%
MS67	Kosciusko City, Mississippi	0.0408594923%
MS68	Lafayette County, Mississippi	0.7049370835%
MS69	Lamar County, Mississippi	1.3105353358%
MS70	Lauderdale County, Mississippi	1.4707252306%
MS71	Laurel City, Mississippi	0.1485722943%
MS72	Lawrence County, Mississippi	0.3428558606%
MS73	Leake County, Mississippi	0.5798006796%
MS74	Leakesville Town, Mississippi	0.0098357610%
MS75	Lee County, Mississippi	1.4759031513%
MS76	Leflore County, Mississippi	0.1018315625%
MS77	Lincoln County, Mississippi	0.5740717271%
MS78	Long Beach City, Mississippi	0.1390600402%
MS79	Lowndes County, Mississippi	0.9390202250%
MS80	Lumberton City, Mississippi	0.0397836057%
MS81	Madison City, Mississippi	0.5726048335%
MS82	Madison County, Mississippi	1.0788558585%
MS83	Marion County, Mississippi	1.6274197695%
MS84	Marshall County, Mississippi	0.6280998419%
MS85	McComb City, Mississippi	1.1131798538%
MS86	McLain Town, Mississippi	0.0044584678%
MS87	Meridian City, Mississippi	1.1164172272%
MS88	Monroe County, Mississippi	0.8130759595%
MS90	Morton City, Mississippi	0.0606772097%
MS91	Moss Point City, Mississippi	0.0032841297%
MS92	Mound Bayou City, Mississippi	0.0140956794%
MS93	Natchez City, Mississippi	0.1092519702%
MS94	Neshoba County, Mississippi	1.0186206925%
MS95	Nettleton City, Mississippi	0.0307845175%
MS96	New Albany City, Mississippi	0.2729319523%
MS97	Newton County, Mississippi	0.5457847155%
MS98	Noxubee County, Mississippi	0.1848315685%
MS99	Ocean Springs City, Mississippi	0.1196690556%

State ID	Qualifying Subdivision	Consolidated State Allocation
MS100	Oktibbeha County, Mississippi	0.7876142411%
MS101	Olive Branch City, Mississippi	1.0910656493%
MS102	Oxford City, Mississippi	0.6004720270%
MS103	Panola County, Mississippi	1.1256622795%
MS104	Pascagoula City, Mississippi	0.2495759096%
MS105	Pearl City, Mississippi	1.1956946818%
MS106	Pearl River County, Mississippi	3.0542096408%
MS107	Perry County, Mississippi	0.3691053552%
MS108	Petal City, Mississippi	0.0271880761%
MS109	Philadelphia City, Mississippi	0.1154094664%
MS110	Picayune City, Mississippi	0.5891117503%
MS111	Pike County, Mississippi	0.1094837756%
MS112	Pontotoc County, Mississippi	1.1485245831%
MS113	Prentiss County, Mississippi	0.7977710394%
MS114	Quitman City, Mississippi	0.0879535299%
MS115	Quitman County, Mississippi	0.2137706975%
MS116	Rankin County, Mississippi	3.4671179892%
MS117	Ridgeland City, Mississippi	0.7137364699%
MS118	Scott County, Mississippi	0.6318707959%
MS119	Shannon Town, Mississippi	0.0293681665%
MS121	Shubuta Town, Mississippi	0.0061495937%
MS122	Simpson County, Mississippi	0.9197186369%
MS123	Smith County, Mississippi	0.3871907879%
MS124	Southaven City, Mississippi	1.5563837550%
MS125	Starkville City, Mississippi	0.1006690780%
MS126	Stone County, Mississippi	0.5647624674%
MS127	Summit Town, Mississippi	0.0051138779%
MS128	Sunflower County, Mississippi	0.4655797100%
MS129	Tallahatchie County, Mississippi	0.2608094178%
MS130	Tate County, Mississippi	1.1559202957%
MS131	Tippah County, Mississippi	0.6673123304%
MS132	Tishomingo County, Mississippi	1.3186009463%
MS133	Tunica County, Mississippi	0.1788884264%
MS134	Tupelo City, Mississippi	1.4776375761%
MS135	Union County, Mississippi	0.4956551465%
MS136	Verona City, Mississippi	0.0613981442%
MS137	Vicksburg City, Mississippi	0.7338152977%
MS138	Walthall County, Mississippi	0.4949654924%
MS139	Warren County, Mississippi	0.5605232929%
MS140	Washington County, Mississippi	0.9202227479%
MS141	Wayne County, Mississippi	0.9416871398%
MS142	Waynesboro City, Mississippi	0.0134634829%
MS143	Webb Town, Mississippi	0.0120400527%
MS145	West Point City, Mississippi	0.2116459242%
MS146	Wiggins City, Mississippi	0.1726599728%
MS148	Winston County, Mississippi	0.5339853585%
MS149	Yalobusha County, Mississippi	0.2986570860%
MS150	Yazoo City, Mississippi	0.2540246640%
MS151	Yazoo County, Mississippi	0.4224067732%

State ID	Qualifying Subdivision	Consolidated State Allocation
MO1	Adair County, Missouri	
MO2	Andrew County, Missouri	
MO3	Arnold City, Missouri	
MO4	Atchison County, Missouri	
MO5	Audrain County, Missouri	
MO6	Ballwin City, Missouri	
MO7	Barry County, Missouri	
MO8	Barton County, Missouri	
MO9	Bates County, Missouri	
MO10	Bellefontaine Neighbors City, Missouri	
MO11	Belton City, Missouri	
MO12	Benton County, Missouri	
MO13	Blue Springs City, Missouri	
MO14	Bolivar City, Missouri	
MO15	Bollinger County, Missouri	
MO16	Boone County, Missouri	
MO17	Branson City, Missouri	Allocations in Missouri will be made in accordance with the Memorandum of Understanding Between the State of Missouri and its Political Subdivisions on Proceeds Relating to the Settlement of Opioid Litigation and with the ancillary Memorandum of Understanding Between the Litigating Subdivisions of the State of Missouri.
MO18	Bridgeton City, Missouri	
MO19	Buchanan County, Missouri	
MO20	Butler County, Missouri	
MO21	Caldwell County, Missouri	
MO22	Callaway County, Missouri	
MO23	Camden County, Missouri	
MO24	Cape Girardeau City, Missouri	
MO25	Cape Girardeau County, Missouri	
MO26	Carroll County, Missouri	
MO27	Carter County, Missouri	
MO28	Carthage City, Missouri	
MO29	Cass County, Missouri	
MO30	Cedar County, Missouri	
MO31	Chariton County, Missouri	
MO32	Chesterfield City, Missouri	
MO33	Christian County, Missouri	
MO34	Clark County, Missouri	
MO35	Clay County, Missouri	
MO36	Clayton City, Missouri	
MO37	Clinton County, Missouri	
MO38	Cole County, Missouri	
MO39	Columbia City, Missouri	
MO40	Cooper County, Missouri	
MO41	Crawford County, Missouri	
MO42	Crestwood City, Missouri	
MO43	Creve Coeur City, Missouri	
MO44	Dade County, Missouri	
MO45	Dallas County, Missouri	
MO46	Dardenne Prairie City, Missouri	
MO47	Daviess County, Missouri	
MO48	De Kalb County, Missouri	

State ID	Qualifying Subdivision	Consolidated State Allocation
MO49	Dent County, Missouri	
MO50	Douglas County, Missouri	
MO51	Dunklin County, Missouri	
MO52	Eureka City, Missouri	
MO53	Excelsior Springs City, Missouri	
MO54	Farmington City, Missouri	
MO55	Ferguson City, Missouri	
MO56	Festus City, Missouri	
MO57	Florissant City, Missouri	
MO58	Franklin County, Missouri	
MO59	Fulton City, Missouri	
MO60	Gasconade County, Missouri	
MO61	Gentry County, Missouri	
MO62	Gladstone City, Missouri	
MO63	Grain Valley City, Missouri	
MO64	Grandview City, Missouri	
MO65	Greene County, Missouri	
MO66	Grundy County, Missouri	Allocations in Missouri
MO67	Hannibal City, Missouri	will be made in
MO68	Harrison County, Missouri	accordance with the
MO69	Harrisonville City, Missouri	Memorandum of
MO70	Hazelwood City, Missouri	Understanding Between
MO71	Henry County, Missouri	the State of Missouri and
MO72	Hickory County, Missouri	its Political Subdivisions
MO73	Holt County, Missouri	on Proceeds Relating to
MO74	Howard County, Missouri	the Settlement of Opioid
MO75	Howell County, Missouri	Litigation and with the
MO76	Independence City, Missouri	ancillary Memorandum
MO77	Iron County, Missouri	of Understanding
MO78	Jackson City, Missouri	Between the Litigating
MO79	Jackson County, Missouri	Subdivisions of the State
MO80	Jasper County, Missouri	of Missouri.
MO81	Jefferson City, Missouri	
MO82	Jefferson County, Missouri	
MO83	Jennings City, Missouri	
MO84	Johnson County, Missouri	
MO85	Joplin City, Missouri	
MO86	Kansas City, Missouri	
MO87	Kearney City, Missouri	
MO88	Kennett City, Missouri	
MO89	Kirksville City, Missouri	
MO90	Kirkwood City, Missouri	
MO91	Knox County, Missouri	
MO92	Laclede County, Missouri	
MO93	Lafayette County, Missouri	
MO94	Lake St. Louis City, Missouri	
MO95	Lawrence County, Missouri	
MO96	Lebanon City, Missouri	
MO97	Lee's Summit City, Missouri	

State ID	Qualifying Subdivision	Consolidated State Allocation
MO98	Lewis County, Missouri	
MO99	Liberty City, Missouri	
MO100	Lincoln County, Missouri	
MO101	Linn County, Missouri	
MO102	Livingston County, Missouri	
MO103	Macon County, Missouri	
MO104	Madison County, Missouri	
MO105	Manchester City, Missouri	
MO106	Maries County, Missouri	
MO107	Marion County, Missouri	
MO108	Marshall City, Missouri	
MO109	Maryland Heights City, Missouri	
MO110	Maryville City, Missouri	
MO111	McDonald County, Missouri	
MO112	Mercer County, Missouri	
MO113	Mexico City, Missouri	
MO114	Miller County, Missouri	
MO115	Mississippi County, Missouri	Allocations in Missouri
MO116	Moberly City, Missouri	will be made in
MO117	Moniteau County, Missouri	accordance with the
MO118	Monroe County, Missouri	Memorandum of
MO119	Montgomery County, Missouri	Understanding Between
MO120	Morgan County, Missouri	the State of Missouri and
MO121	Neosho City, Missouri	its Political Subdivisions
MO122	New Madrid County, Missouri	on Proceeds Relating to
MO123	Newton County, Missouri	the Settlement of Opioid
MO124	Nixa City, Missouri	Litigation and with the
MO125	Nodaway County, Missouri	ancillary Memorandum
MO126	O'Fallon City, Missouri	of Understanding
MO127	Oregon County, Missouri	Between the Litigating
MO128	Osage County, Missouri	Subdivisions of the State
MO129	Overland City, Missouri	of Missouri.
MO130	Ozark City, Missouri	
MO131	Ozark County, Missouri	
MO132	Pemiscot County, Missouri	
MO133	Perry County, Missouri	
MO134	Pettis County, Missouri	
MO135	Phelps County, Missouri	
MO136	Pike County, Missouri	
MO137	Platte County, Missouri	
MO138	Polk County, Missouri	
MO139	Poplar Bluff City, Missouri	
MO140	Pulaski County, Missouri	
MO141	Putnam County, Missouri	
MO142	Ralls County, Missouri	
MO143	Randolph County, Missouri	
MO144	Ray County, Missouri	
MO145	Raymore City, Missouri	
MO146	Raytown City, Missouri	

State ID	Qualifying Subdivision	Consolidated State Allocation
MO147	Republic City, Missouri	
MO148	Reynolds County, Missouri	
MO149	Ripley County, Missouri	
MO150	Rolla City, Missouri	
MO151	Saline County, Missouri	
MO152	Schuyler County, Missouri	
MO153	Scotland County, Missouri	
MO154	Scott County, Missouri	
MO155	Sedalia City, Missouri	
MO156	Shannon County, Missouri	
MO157	Shelby County, Missouri	
MO158	Sikeston City, Missouri	
MO159	Smithville City, Missouri	
MO160	Springfield City, Missouri	
MO161	St Charles County, Missouri	
MO162	St Clair County, Missouri	
MO163	St Francois County, Missouri	
MO164	St Louis County, Missouri	Allocations in Missouri
MO165	St. Ann City, Missouri	will be made in
MO166	St. Charles City, Missouri	accordance with the
MO167	St. Joseph City, Missouri	Memorandum of
MO168	St. Louis City, Missouri	Understanding Between
MO169	St. Peters City, Missouri	the State of Missouri and
MO170	Ste Genevieve County, Missouri	its Political Subdivisions
MO171	Stoddard County, Missouri	on Proceeds Relating to
MO172	Stone County, Missouri	the Settlement of Opioid
MO173	Sullivan County, Missouri	Litigation and with the
MO174	Taney County, Missouri	ancillary Memorandum
MO175	Texas County, Missouri	of Understanding
MO176	Town and Country City, Missouri	Between the Litigating
MO177	Troy City, Missouri	Subdivisions of the State
MO178	Union City, Missouri	of Missouri.
MO179	University City, Missouri	
MO180	Vernon County, Missouri	
MO181	Warren County, Missouri	
MO182	Warrensburg City, Missouri	
MO183	Washington City, Missouri	
MO184	Washington County, Missouri	
MO185	Wayne County, Missouri	
MO186	Webb City, Missouri	
MO187	Webster County, Missouri	
MO188	Webster Groves City, Missouri	
MO189	Wentzville City, Missouri	
MO190	West Plains City, Missouri	
MO191	Wildwood City, Missouri	
MO192	Worth County, Missouri	
MO193	Wright County, Missouri	
MO194	Northeast Ambulance and Fire Protection District, Missouri	

State ID	Qualifying Subdivision	Consolidated State Allocation
MO195	Kinloch Fire Protection District, Missouri	Allocations in Missouri will be made in accordance with the Memorandum of Understanding Between the State of Missouri and its Political Subdivisions on Proceeds Relating to the Settlement of Opioid Litigation and with the ancillary Memorandum of Understanding Between the Litigating Subdivisions of the State of Missouri.
MO196	Citizens Memorial Hospital District D/B/A Citizens Memorial Hospital, Missouri	

State ID	Qualifying Subdivision	Consolidated State Allocation
MT1	Anaconda-Deer Lodge County, Montana	1.4480190514%
MT2	Beaverhead County, Montana	0.6841480225%
MT3	Big Horn County, Montana	0.8504903609%
MT4	Billings City, Montana	9.1331142413%
MT5	Blaine County, Montana	0.3691094337%
MT6	Bozeman City, Montana	2.0161886507%
MT7	Broadwater County, Montana	0.4143251264%
MT8	Butte-Silver Bow, Montana	5.6101260434%
MT9	Carbon County, Montana	0.7105360522%
MT10	Carter County, Montana	0.0374679104%
MT11	Cascade County, Montana	3.8993050480%
MT12	Chouteau County, Montana	0.4053063424%
MT13	Custer County, Montana	1.5139056450%
MT14	Daniels County, Montana	0.1787602908%
MT15	Dawson County, Montana	0.7800682133%
MT16	Fallon County, Montana	0.1543582011%
MT17	Fergus County, Montana	0.8667027669%
MT18	Flathead County, Montana	8.0141785369%
MT19	Gallatin County, Montana	4.0205572717%
MT20	Garfield County, Montana	0.0398838599%
MT21	Glacier County, Montana	1.5230709367%
MT22	Golden Valley County, Montana	0.0264303648%
MT23	Granite County, Montana	0.1831398237%
MT24	Great Falls City, Montana	4.3577779784%
MT25	Helena City, Montana	1.7360655042%
MT26	Hill County, Montana	1.8438532922%
MT27	Jefferson County, Montana	0.7770843087%
MT28	Judith Basin County, Montana	0.0614804228%
MT29	Kalispell City, Montana	2.4735432710%
MT30	Lake County, Montana	3.6175099064%
MT31	Lewis and Clark County, Montana	4.9326712334%
MT32	Liberty County, Montana	0.1210395973%
MT33	Lincoln County, Montana	2.1915597624%
MT34	Madison County, Montana	0.5498047673%
MT35	McCone County, Montana	0.0823035394%
MT36	Meagher County, Montana	0.0912086373%
MT37	Mineral County, Montana	0.7546909914%
MT38	Missoula City, Montana	4.4312558575%
MT39	Missoula County, Montana	8.0272833629%
MT40	Musselshell County, Montana	0.3895510594%
MT41	Park County, Montana	2.0831835653%
MT42	Petroleum County, Montana	0.0144742922%
MT43	Phillips County, Montana	0.2085622347%
MT44	Pondera County, Montana	0.4003873948%
MT45	Powder River County, Montana	0.1504386452%
MT46	Powell County, Montana	0.8872723490%
MT47	Prairie County, Montana	0.0572069653%
MT48	Ravalli County, Montana	3.6906819270%

State ID	Qualifying Subdivision	Consolidated State Allocation
MT49	Richland County, Montana	0.7541525281%
MT50	Roosevelt County, Montana	0.8182976782%
MT51	Rosebud County, Montana	0.5641981949%
MT52	Sanders County, Montana	1.0679134558%
MT53	Sheridan County, Montana	0.2700355225%
MT54	Stillwater County, Montana	0.5055604014%
MT55	Sweet Grass County, Montana	0.2836540766%
MT56	Teton County, Montana	0.5735903832%
MT57	Toole County, Montana	0.3258040487%
MT58	Treasure County, Montana	0.0226554138%
MT59	Valley County, Montana	0.5598291268%
MT60	Wheatland County, Montana	0.0720998508%
MT61	Wibaux County, Montana	0.0630373047%
MT62	Yellowstone County, Montana	7.3090889550%

State ID	Qualifying Subdivision	Consolidated State Allocation
NE1	Adams County, Nebraska	0.7130410264%
NE2	Antelope County, Nebraska	0.2406339800%
NE3	Arthur County, Nebraska	0.0110831278%
NE4	Banner County, Nebraska	0.0183674606%
NE5	Beatrice City, Nebraska	0.9248205382%
NE6	Bellevue City, Nebraska	2.4787880023%
NE7	Blaine County, Nebraska	0.0123640997%
NE8	Boone County, Nebraska	0.2533407507%
NE9	Box Butte County, Nebraska	0.7492533620%
NE10	Boyd County, Nebraska	0.0902847433%
NE11	Brown County, Nebraska	0.1375135354%
NE12	Buffalo County, Nebraska	0.9630320332%
NE13	Burt County, Nebraska	0.3365661770%
NE14	Butler County, Nebraska	0.2899805672%
NE15	Cass County, Nebraska	1.2356339344%
NE16	Cedar County, Nebraska	0.3502588009%
NE17	Chase County, Nebraska	0.1707898814%
NE18	Cherry County, Nebraska	0.3082161558%
NE19	Cheyenne County, Nebraska	0.7408263023%
NE20	Clay County, Nebraska	0.1772971991%
NE21	Colfax County, Nebraska	0.2670475913%
NE22	Columbus City, Nebraska	0.7291294061%
NE23	Cuming County, Nebraska	0.4019883978%
NE24	Custer County, Nebraska	0.4848137961%
NE25	Dakota County, Nebraska	0.3940917673%
NE26	Dawes County, Nebraska	0.6577293164%
NE27	Dawson County, Nebraska	0.7540316373%
NE28	Deuel County, Nebraska	0.1500055852%
NE29	Dixon County, Nebraska	0.2144571499%
NE30	Dodge County, Nebraska	1.8317996330%
NE31	Douglas County, Nebraska	14.9119111455%
NE32	Dundy County, Nebraska	0.1513630330%
NE33	Fillmore County, Nebraska	0.3541443667%
NE34	Franklin County, Nebraska	0.1630162987%
NE35	Fremont City, Nebraska	0.1476946393%
NE36	Frontier County, Nebraska	0.0732649260%
NE37	Furnas County, Nebraska	0.2315426581%
NE38	Gage County, Nebraska	0.5390651380%
NE39	Garden County, Nebraska	0.1132118364%
NE40	Garfield County, Nebraska	0.1104479177%
NE41	Gosper County, Nebraska	0.0528581072%
NE42	Grand Island City, Nebraska	1.5052861196%
NE43	Grant County, Nebraska	0.0167075406%
NE44	Greeley County, Nebraska	0.1006996872%
NE45	Hall County, Nebraska	1.3023214397%
NE46	Hamilton County, Nebraska	0.3285553228%
NE47	Harlan County, Nebraska	0.1831157431%
NE48	Hastings City, Nebraska	0.7738158635%
NE49	Hayes County, Nebraska	0.0464208924%

State ID	Qualifying Subdivision	Consolidated State Allocation
NE50	Hitchcock County, Nebraska	0.1428727336%
NE51	Holt County, Nebraska	0.4319086269%
NE52	Hooker County, Nebraska	0.0195391111%
NE53	Howard County, Nebraska	0.3117590505%
NE54	Jefferson County, Nebraska	0.4621587809%
NE55	Johnson County, Nebraska	0.3674281385%
NE56	Kearney City, Nebraska	1.3128662946%
NE57	Kearney County, Nebraska	0.3284087439%
NE58	Keith County, Nebraska	0.5586120928%
NE59	Keya Paha County, Nebraska	0.0207700795%
NE60	Kimball County, Nebraska	0.2074517582%
NE61	Knox County, Nebraska	0.4262180329%
NE62	La Vista City, Nebraska	0.6948539706%
NE63	Lancaster County, Nebraska	7.9530599340%
NE64	Lexington City, Nebraska	0.2672235840%
NE65	Lincoln City, Nebraska	8.9584993437%
NE66	Lincoln County, Nebraska	0.7588461895%
NE67	Logan County, Nebraska	0.0192253637%
NE68	Loup County, Nebraska	0.0163070224%
NE69	Madison County, Nebraska	1.0198085515%
NE70	McPherson County, Nebraska	0.0133651501%
NE71	Merrick County, Nebraska	0.5571149293%
NE72	Morrill County, Nebraska	0.2640807173%
NE73	Nance County, Nebraska	0.1820220392%
NE74	Nemaha County, Nebraska	0.5862140225%
NE75	Norfolk City, Nebraska	0.6855964607%
NE76	North Platte City, Nebraska	1.2668714124%
NE77	Nuckolls County, Nebraska	0.2606241030%
NE78	Omaha City, Nebraska	16.7836032733%
NE79	Otoe County, Nebraska	0.8114537890%
NE80	Papillion City, Nebraska	1.1943452635%
NE81	Pawnee County, Nebraska	0.2449303588%
NE82	Perkins County, Nebraska	0.0938742100%
NE83	Phelps County, Nebraska	0.4453164270%
NE84	Pierce County, Nebraska	0.2791606931%
NE85	Platte County, Nebraska	0.5054632790%
NE86	Polk County, Nebraska	0.2126035890%
NE87	Red Willow County, Nebraska	0.6782282985%
NE88	Richardson County, Nebraska	0.6780640713%
NE89	Rock County, Nebraska	0.0420632348%
NE90	Saline County, Nebraska	0.6431415318%
NE91	Sarpy County, Nebraska	4.1205096407%
NE92	Saunders County, Nebraska	0.9147340487%
NE93	Scotts Bluff County, Nebraska	1.8428925654%
NE94	Scottsbluff City, Nebraska	0.5159537183%
NE95	Seward County, Nebraska	0.7637450614%
NE96	Sheridan County, Nebraska	0.1814092513%
NE97	Sherman County, Nebraska	0.1198260243%
NE98	Sioux County, Nebraska	0.0355730752%

State ID	Qualifying Subdivision	Consolidated State Allocation
NE99	South Sioux City, Nebraska	0.4431368628%
NE100	Stanton County, Nebraska	0.2162062918%
NE101	Thayer County, Nebraska	0.2059575361%
NE102	Thomas County, Nebraska	0.0173570958%
NE103	Thurston County, Nebraska	0.2564159657%
NE104	Valley County, Nebraska	0.3103957199%
NE105	Washington County, Nebraska	0.7878555706%
NE106	Wayne County, Nebraska	0.3510034608%
NE107	Webster County, Nebraska	0.1652355715%
NE108	Wheeler County, Nebraska	0.0210156849%
NE109	York County, Nebraska	0.8321939645%
NE110	Region 1 Behavioral Health Authority, Nebraska	0.0000000000%
NE111	Region II Human Services, Nebraska	0.0000000000%
NE112	Region 3 Behavioral Health Services, Nebraska	0.0000000000%
NE113	Region 4 Behavioral Health System, Nebraska	0.0000000000%
NE114	Region V Systems, Nebraska	0.0000000000%
NE115	Region 6 Behavioral Healthcare, Nebraska	0.0000000000%

State ID	Qualifying Subdivision	Consolidated State Allocation
NV1	Boulder City, Nevada	0.1478660452%
NV2	Carson City, Nevada	1.8146007537%
NV3	Churchill County, Nevada	0.7013051988%
NV4	Clark County, Nevada	66.9248026834%
NV5	Douglas County, Nevada	1.6601462472%
NV7	Elko County, Nevada	1.0825745225%
NV8	Ely City, Nevada	0.0066172807%
NV9	Esmeralda County, Nevada	0.0497291448%
NV10	Eureka County, Nevada	0.1033573623%
NV11	Fernley City, Nevada	0.0144506991%
NV12	Henderson City, Nevada	2.3020643974%
NV13	Humboldt County, Nevada	1.0192724731%
NV14	Lander County, Nevada	0.3627438791%
NV15	Las Vegas City, Nevada	4.7206970773%
NV16	Lincoln County, Nevada	0.2373284219%
NV17	Lyon County, Nevada	1.5721396872%
NV18	Mesquite City, Nevada	0.1465069544%
NV19	Mineral County, Nevada	0.5992930253%
NV20	North Las Vegas City, Nevada	2.4258866892%
NV21	Nye County, Nevada	1.6016841576%
NV22	Pershing County, Nevada	0.3624498791%
NV23	Reno City, Nevada	1.3562863383%
NV24	Sparks City, Nevada	0.4253229218%
NV25	Storey County, Nevada	0.1263908620%
NV26	Washoe County, Nevada	9.1139488828%
NV27	West Wendover City, Nevada	0.0564015794%
NV28	White Pine County, Nevada	1.0458576594%
NV29	Central Lyon Fire Protection District, Nevada	0.0150922618%
NV30	North Lyon Fire Protection District, Nevada	0.0051829150%

State ID	Qualifying Subdivision	Consolidated State Allocation
NH3	Belknap County, New Hampshire	2.868905%
NH4	Belmont Town, New Hampshire	0.530951%
NH5	Berlin City, New Hampshire	0.684196%
NH6	Carroll County, New Hampshire	3.637455%
NH7	Cheshire County, New Hampshire	3.877305%
NH8	Claremont City, New Hampshire	0.940017%
NH9	Concord City, New Hampshire	3.191730%
NH11	Coos County, New Hampshire	1.585665%
NH12	Derry Town, New Hampshire	2.491200%
NH13	Dover City, New Hampshire	2.376792%
NH16	Franklin City, New Hampshire	0.634542%
NH18	Grafton County, New Hampshire	6.614598%
NH21	Hillsborough County, New Hampshire	15.676694%
NH24	Keene City, New Hampshire	1.673068%
NH25	Laconia City, New Hampshire	1.224729%
NH27	Londonderry Town, New Hampshire	1.874806%
NH28	Manchester City, New Hampshire	8.396484%
NH29	Merrimack County, New Hampshire	7.339228%
NH32	Nashua City, New Hampshire	6.629407%
NH36	Rochester City, New Hampshire	2.358716%
NH37	Rockingham County, New Hampshire	18.441209%
NH40	Strafford County, New Hampshire	4.766215%
NH41	Sullivan County, New Hampshire	2.186088%

State ID	Qualifying Subdivision	Consolidated State Allocation
NJ1	Aberdeen Township, New Jersey	0.0797396894%
NJ2	Asbury Park City, New Jersey	0.3916349671%
NJ3	Atlantic City, New Jersey	1.2847690915%
NJ4	Atlantic County, New Jersey	2.8915764045%
NJ5	Barnegat Township, New Jersey	0.1626638814%
NJ6	Bayonne City, New Jersey	0.8502340058%
NJ7	Beachwood Borough, New Jersey	0.0492329228%
NJ8	Belleville Township, New Jersey	0.0872090223%
NJ9	Bellmawr Borough, New Jersey	0.0640989992%
NJ10	Bergen County, New Jersey	4.9446361090%
NJ11	Bergenfield Borough, New Jersey	0.0618076073%
NJ12	Berkeley Heights Township, New Jersey	0.0272673062%
NJ13	Berkeley Township, New Jersey	0.2619731788%
NJ14	Bernards Township, New Jersey	0.0910577073%
NJ15	Bloomfield Township, New Jersey	0.1173874959%
NJ16	Bordentown Township, New Jersey	0.0545891482%
NJ17	Bound Brook Borough, New Jersey	0.0527105023%
NJ18	Branchburg Township, New Jersey	0.0561024563%
NJ19	Brick Township, New Jersey	0.5908193174%
NJ20	Bridgeton City, New Jersey	0.2079614154%
NJ21	Bridgewater Township, New Jersey	0.1828057629%
NJ22	Burlington County, New Jersey	4.4940916659%
NJ23	Burlington Township, New Jersey	0.1157900630%
NJ24	Camden City, New Jersey	1.6603828843%
NJ25	Camden County, New Jersey	6.8741218172%
NJ26	Cape May County, New Jersey	1.2842777540%
NJ27	Carteret Borough, New Jersey	0.1794847100%
NJ28	Cedar Grove Township, New Jersey	0.0187911021%
NJ29	Chatham Township, New Jersey	0.0498541051%
NJ30	Cherry Hill Township, New Jersey	0.3440044947%
NJ31	Cinnaminson Township, New Jersey	0.0701648926%
NJ32	Clark Township, New Jersey	0.0429898704%
NJ33	Cliffside Park Borough, New Jersey	0.1142449150%
NJ34	Clifton City, New Jersey	0.3535258812%
NJ35	Clinton Town, New Jersey	0.0294193343%
NJ36	Clinton Township, New Jersey	0.0799778554%
NJ37	Collingswood Borough, New Jersey	0.1128930571%
NJ38	Cranford Township, New Jersey	0.0684441330%
NJ39	Cumberland County, New Jersey	0.9862828059%
NJ40	Delran Township, New Jersey	0.0837486054%

State ID	Qualifying Subdivision	Consolidated State Allocation
NJ41	Denville Township, New Jersey	0.0795654377%
NJ42	Deptford Township, New Jersey	0.2200095463%
NJ43	Dover Town, New Jersey	0.1186530251%
NJ44	Dumont Borough, New Jersey	0.0403826120%
NJ45	East Brunswick Township, New Jersey	0.0972927881%
NJ46	East Greenwich Township, New Jersey	0.0212104162%
NJ47	East Hanover Township, New Jersey	0.0890156417%
NJ48	East Orange City, New Jersey	1.2844844553%
NJ49	East Windsor Township, New Jersey	0.0422463462%
NJ50	Eatontown Borough, New Jersey	0.0974794194%
NJ51	Edgewater Borough, New Jersey	0.0546948904%
NJ52	Edison Township, New Jersey	2.4018132631%
NJ53	Egg Harbor Township, New Jersey	0.1572891336%
NJ54	Elizabeth City, New Jersey	0.7646308101%
NJ55	Elmwood Park Borough, New Jersey	0.0462435391%
NJ56	Englewood City, New Jersey	0.6429812736%
NJ57	Essex County, New Jersey	1.4898498664%
NJ58	Evesham Township, New Jersey	0.1745115947%
NJ59	Ewing Township, New Jersey	0.0839796907%
NJ60	Fair Lawn Borough, New Jersey	0.0699332916%
NJ61	Fairview Borough, New Jersey	0.0347025484%
NJ62	Florence Township, New Jersey	0.0676007282%
NJ63	Florham Park Borough, New Jersey	0.0674975182%
NJ64	Fort Lee Borough, New Jersey	0.1848366682%
NJ65	Franklin Lakes Borough, New Jersey	0.0273076336%
NJ66	Franklin Township, Gloucester County, New Jersey	0.0870963870%
NJ67	Franklin Township, Somerset County, New Jersey	0.3236022203%
NJ68	Freehold Borough, New Jersey	0.0816675723%
NJ69	Freehold Township, New Jersey	0.1512818556%
NJ70	Galloway Township, New Jersey	0.0846515634%
NJ71	Garfield City, New Jersey	0.0989196224%
NJ72	Glassboro Borough, New Jersey	0.1948186777%
NJ73	Glen Rock Borough, New Jersey	0.0253178060%
NJ74	Gloucester City, New Jersey	0.1325275640%
NJ75	Gloucester County, New Jersey	4.7022029491%
NJ76	Gloucester Township, New Jersey	0.3259502581%
NJ77	Guttenberg Town, New Jersey	0.0382186733%
NJ78	Hackensack City, New Jersey	0.2554139785%
NJ79	Haddon Township, New Jersey	0.0831057121%
NJ80	Haddonfield Borough, New Jersey	0.0710479214%

State ID	Qualifying Subdivision	Consolidated State Allocation
NJ81	Hamilton Township, Atlantic County, New Jersey	0.0939608561%
NJ82	Hamilton Township, Mercer County, New Jersey	0.1394262176%
NJ83	Hammonton Town, New Jersey	0.0463451547%
NJ84	Hanover Township, New Jersey	0.0711651990%
NJ85	Harrison Town, New Jersey	0.2059190684%
NJ86	Harrison Township, New Jersey	0.0478487561%
NJ87	Hasbrouck Heights Borough, New Jersey	0.0360845581%
NJ88	Hawthorne Borough, New Jersey	0.0380122534%
NJ89	Hazlet Township, New Jersey	0.0810519234%
NJ90	Highland Park Borough, New Jersey	0.0606246554%
NJ91	Hillsborough Township, New Jersey	0.1405113053%
NJ92	Hillsdale Borough, New Jersey	0.0247027667%
NJ93	Hillside Township, New Jersey	0.1085603967%
NJ94	Hoboken City, New Jersey	0.1803633309%
NJ95	Holmdel Township, New Jersey	0.1058875828%
NJ96	Hopatcong Borough, New Jersey	0.0677558479%
NJ97	Hopewell Township, Mercer County, New Jersey	0.0275878151%
NJ98	Howell Township, New Jersey	0.2067529072%
NJ99	Hudson County, New Jersey	0.9363280231%
NJ100	Hunterdon County, New Jersey	0.8037645396%
NJ101	Irvington Township, New Jersey	0.9244040630%
NJ102	Jackson Township, New Jersey	0.2670097394%
NJ103	Jefferson Township, New Jersey	0.0866198206%
NJ104	Jersey City, New Jersey	0.9916102863%
NJ105	Kearny Town, New Jersey	0.1071857960%
NJ106	Lacey Township, New Jersey	0.1502291236%
NJ107	Lakewood Township, New Jersey	0.7730028665%
NJ108	Lawrence Township, Mercer County, New Jersey	0.0644503163%
NJ109	Lincoln Park Borough, New Jersey	0.0595261565%
NJ110	Linden City, New Jersey	0.2495261821%
NJ111	Lindenwold Borough, New Jersey	0.1004455914%
NJ112	Little Egg Harbor Township, New Jersey	0.1465902816%
NJ113	Little Falls Township, New Jersey	0.0348320180%
NJ114	Little Ferry Borough, New Jersey	0.0258966914%
NJ115	Livingston Township, New Jersey	0.0484285793%
NJ116	Lodi Borough, New Jersey	0.1078340351%
NJ117	Long Branch City, New Jersey	0.5243184480%
NJ118	Lower Township, New Jersey	0.0710329159%
NJ119	Lumberton Township, New Jersey	0.0461973502%
NJ120	Lyndhurst Township, New Jersey	0.0645354727%
NJ121	Madison Borough, New Jersey	0.1424930674%

State ID	Qualifying Subdivision	Consolidated State Allocation
NJ122	Mahwah Township, New Jersey	0.0610985020%
NJ123	Manalapan Township, New Jersey	0.1318410608%
NJ124	Manchester Township, New Jersey	0.2136801182%
NJ125	Mantua Township, New Jersey	0.0853984170%
NJ126	Manville Borough, New Jersey	0.0574532358%
NJ127	Maple Shade Township, New Jersey	0.1058088976%
NJ128	Maplewood Township, New Jersey	0.0589307182%
NJ129	Marlboro Township, New Jersey	0.1588151495%
NJ130	Medford Township, New Jersey	0.1130775783%
NJ131	Mercer County, New Jersey	1.1117204895%
NJ132	Metuchen Borough, New Jersey	0.0339468322%
NJ133	Middle Township, New Jersey	0.0695160908%
NJ134	Middlesex Borough, New Jersey	0.0317606196%
NJ135	Middlesex County, New Jersey	2.2387299770%
NJ136	Middletown Township, New Jersey	0.3292948041%
NJ137	Millburn Township, New Jersey	0.0627532842%
NJ138	Millstone Township, New Jersey	0.0066098909%
NJ139	Millville City, New Jersey	0.2397981412%
NJ140	Monmouth County, New Jersey	4.4617935668%
NJ141	Monroe Township, Gloucester County, New Jersey	0.2271632002%
NJ142	Monroe Township, Middlesex County, New Jersey	0.1024216796%
NJ143	Montclair Township, New Jersey	0.5843666564%
NJ144	Montgomery Township, New Jersey	0.0805666350%
NJ145	Montville Township, New Jersey	0.0902727303%
NJ146	Moorestown Township, New Jersey	0.1000871936%
NJ147	Morris County, New Jersey	2.3575766204%
NJ148	Morris Township, New Jersey	0.1125747053%
NJ149	Morristown, New Jersey	0.2369807115%
NJ150	Mount Laurel Township, New Jersey	0.1725831491%
NJ151	Mount Olive Township, New Jersey	0.1068809023%
NJ152	Neptune Township, New Jersey	0.2450351195%
NJ153	New Brunswick City, New Jersey	1.8327331194%
NJ154	New Milford Borough, New Jersey	0.0368443070%
NJ155	New Providence Borough, New Jersey	0.0258412178%
NJ156	Newark City, New Jersey	1.7760400546%
NJ157	North Arlington Borough, New Jersey	0.0408890956%

State ID	Qualifying Subdivision	Consolidated State Allocation
NJ158	North Bergen Township, New Jersey	0.1110635074%
NJ159	North Brunswick Township, New Jersey	0.1217197343%
NJ160	North Plainfield Borough, New Jersey	0.1454941742%
NJ161	Nutley Township, New Jersey	0.0574061090%
NJ162	Oakland Borough, New Jersey	0.0335231134%
NJ163	Ocean City, New Jersey	0.1910428164%
NJ164	Ocean County, New Jersey	4.9497293624%
NJ165	Ocean Township, Monmouth County, New Jersey	0.1387263032%
NJ166	Old Bridge Township, New Jersey	0.1263966779%
NJ167	Orange City Township, New Jersey	0.5609302630%
NJ168	Palisades Park Borough, New Jersey	0.0366345109%
NJ169	Paramus Borough, New Jersey	0.1129786355%
NJ170	Parsippany-Troy Hills Township, New Jersey	0.2342890939%
NJ171	Passaic City, New Jersey	0.4984612868%
NJ172	Passaic County, New Jersey	2.1805505203%
NJ173	Paterson City, New Jersey	0.9805526614%
NJ174	Pemberton Township, New Jersey	0.1182059071%
NJ175	Pennsauken Township, New Jersey	0.3221185950%
NJ176	Pennsville Township, New Jersey	0.0340920576%
NJ177	Pequannock Township, New Jersey	0.0769477223%
NJ178	Perth Amboy City, New Jersey	0.3436749356%
NJ179	Phillipsburg Town, New Jersey	0.1544595119%
NJ180	Pine Hill Borough, New Jersey	0.0482528270%
NJ181	Piscataway Township, New Jersey	0.1067019613%
NJ182	Plainfield City, New Jersey	0.3012229667%
NJ183	Plainsboro Township, New Jersey	0.0503298743%
NJ184	Pleasantville City, New Jersey	0.1421175070%
NJ185	Point Pleasant Borough, New Jersey	0.1109970141%
NJ186	Pompton Lakes Borough, New Jersey	0.0290573727%
NJ187	Princeton, New Jersey	0.0503970240%
NJ188	Rahway City, New Jersey	0.1444485698%
NJ189	Ramsey Borough, New Jersey	0.0402523452%
NJ190	Randolph Township, New Jersey	0.0853331898%
NJ191	Raritan Township, New Jersey	0.1071670391%
NJ192	Readington Township, New Jersey	0.0850076166%
NJ193	Red Bank Borough, New Jersey	0.1420636747%
NJ194	Ridgefield Borough, New Jersey	0.0201153405%

State ID	Qualifying Subdivision	Consolidated State Allocation
NJ195	Ridgefield Park Village, New Jersey	0.0392827532%
NJ196	Ridgewood Village, New Jersey	0.0849185213%
NJ197	Ringwood Borough, New Jersey	0.0309822545%
NJ198	River Edge Borough, New Jersey	0.0266057498%
NJ199	Robbinsville Township, New Jersey	0.0338593312%
NJ200	Rockaway Township, New Jersey	0.1290497970%
NJ201	Roselle Borough, New Jersey	0.0912325687%
NJ202	Roselle Park Borough, New Jersey	0.0316673040%
NJ203	Roxbury Township, New Jersey	0.1057717120%
NJ204	Rutherford Borough, New Jersey	0.0459830524%
NJ205	Saddle Brook Township, New Jersey	0.0390656888%
NJ206	Salem County, New Jersey	0.9344056735%
NJ207	Sayreville Borough, New Jersey	0.1477057086%
NJ208	Scotch Plains Township, New Jersey	0.0484433504%
NJ209	Secaucus Town, New Jersey	0.0516659295%
NJ210	Somers Point City, New Jersey	0.0439926621%
NJ211	Somerset County, New Jersey	1.4647125488%
NJ212	Somerville Borough, New Jersey	0.0756287358%
NJ213	South Brunswick Township, New Jersey	0.1037777110%
NJ214	South Orange Village Township, New Jersey	0.0488891085%
NJ215	South Plainfield Borough, New Jersey	0.0899775902%
NJ216	South River Borough, New Jersey	0.0421568288%
NJ217	Southampton Township, New Jersey	0.0127996268%
NJ218	Sparta Township, New Jersey	0.1069549921%
NJ219	Springfield Township, Union County, New Jersey	0.0573437423%
NJ220	Stafford Township, New Jersey	0.2155115906%
NJ221	Summit City, New Jersey	0.5428090174%
NJ222	Sussex County, New Jersey	1.2735318221%
NJ223	Teaneck Township, New Jersey	0.1723477966%
NJ224	Tenafly Borough, New Jersey	0.0450713724%
NJ225	Tinton Falls Borough, New Jersey	0.0881640307%
NJ226	Toms River Township, New Jersey	0.5620940829%
NJ227	Totowa Borough, New Jersey	0.0342545863%
NJ228	Trenton City, New Jersey	1.9352906929%
NJ229	Union City, New Jersey	0.9841875644%
NJ230	Union County, New Jersey	1.7400474523%
NJ231	Union Township, Union County, New Jersey	0.2247240506%
NJ232	Upper Township, New Jersey	0.0173930552%

State ID	Qualifying Subdivision	Consolidated State Allocation
NJ233	Vernon Township, New Jersey	0.0783616187%
NJ234	Verona Township, New Jersey	0.0234318917%
NJ235	Vineland City, New Jersey	0.5000169856%
NJ236	Voorhees Township, New Jersey	0.1406021825%
NJ237	Waldwick Borough, New Jersey	0.0421770394%
NJ238	Wall Township, New Jersey	0.1650847899%
NJ239	Wallington Borough, New Jersey	0.0235956865%
NJ240	Wanaque Borough, New Jersey	0.0311245257%
NJ241	Wantage Township, New Jersey	0.0091403397%
NJ242	Warren County, New Jersey	1.0382472049%
NJ243	Warren Township, New Jersey	0.0736326246%
NJ244	Washington Township, Gloucester County, New Jersey	0.2470375143%
NJ245	Washington Township, Morris County, New Jersey	0.0524274135%
NJ246	Waterford Township, New Jersey	0.0648566849%
NJ247	Wayne Township, New Jersey	0.1724444886%
NJ248	Weehawken Township, New Jersey	0.0282451513%
NJ249	West Caldwell Township, New Jersey	0.0246748189%
NJ250	West Deptford Township, New Jersey	0.1402059895%
NJ251	West Milford Township, New Jersey	0.0644752630%
NJ252	West New York Town, New Jersey	0.6157331463%
NJ253	West Orange Township, New Jersey	0.1051193933%
NJ254	West Windsor Township, New Jersey	0.0458605228%
NJ255	Westfield Town, New Jersey	0.0887745684%
NJ256	Westwood Borough, New Jersey	0.0348328152%
NJ257	Willingboro Township, New Jersey	0.2091808026%
NJ258	Winslow Township, New Jersey	0.1817978600%
NJ259	Woodbridge Township, New Jersey	0.3688029685%
NJ260	Woodland Park Borough, New Jersey	0.0292498655%
NJ261	Woolwich Township, New Jersey	0.0599291958%
NJ262	Wyckoff Township, New Jersey	0.0296665036%

State ID	Qualifying Subdivision	Consolidated State Allocation
NY1	Albany City, New York	
NY2	Albany County, New York	
NY3	Allegany County, New York	
NY4	Broome County, New York	
NY5	Buffalo City, New York	
NY6	Cattaraugus County, New York	
NY7	Cayuga County, New York	
NY8	Chautauqua County, New York	
NY9	Chemung County, New York	
NY10	Chenango County, New York	
NY11	Clinton County, New York	
NY12	Columbia County, New York	
NY13	Cortland County, New York	
NY14	Delaware County, New York	
NY15	Dutchess County, New York	
NY16	Erie County, New York	
NY17	Essex County, New York	
NY18	Franklin County, New York	
NY19	Fulton County, New York	
NY20	Genesee County, New York	
NY21	Greene County, New York	
NY22	Hamilton County, New York	Allocations in New York will be made in accordance with the New York Agreement.
NY23	Herkimer County, New York	
NY24	Jefferson County, New York	
NY25	Lewis County, New York	
NY26	Livingston County, New York	
NY27	Madison County, New York	
NY28	Monroe County, New York	
NY29	Montgomery County, New York	
NY30	Nassau County, New York	
NY31	New York City, New York	
NY32	Niagara County, New York	
NY33	Oneida County, New York	
NY34	Onondaga County, New York	
NY35	Ontario County, New York	
NY36	Orange County, New York	
NY37	Orleans County, New York	
NY38	Oswego County, New York	
NY39	Otsego County, New York	
NY40	Putnam County, New York	
NY41	Rensselaer County, New York	
NY42	Rochester City, New York	
NY43	Rockland County, New York	
NY44	Saratoga County, New York	
NY45	Schenectady County, New York	
NY46	Schoharie County, New York	
NY47	Schuyler County, New York	

State ID	Qualifying Subdivision	Consolidated State Allocation
NY48	Seneca County, New York	
NY49	St Lawrence County, New York	
NY50	Steuben County, New York	
NY51	Suffolk County, New York	
NY52	Sullivan County, New York	
NY53	Syracuse City, New York	
NY54	Tioga County, New York	
NY55	Tompkins County, New York	
NY56	Ulster County, New York	
NY57	Warren County, New York	
NY58	Washington County, New York	
NY59	Wayne County, New York	
NY60	Westchester County, New York	
NY61	Wyoming County, New York	
NY62	Yates County, New York	
NY63	Yonkers City, New York	Allocations in New York will be made in accordance with the New York Agreement.
NY64	Geneva City, New York	
NY65	Herkimer Village, New York	
NY66	Lackawanna City, New York	
NY67	Rome City, New York	
NY68	Utica City, New York	
NY69	Plattsburgh City, New York	
NY70	Saratoga Springs City, New York	
NY71	Schenectady City, New York	
NY72	Troy City, New York	
NY73	Amherst Town, New York	
NY74	Amsterdam City, New York	
NY75	Auburn City, New York	
NY76	Cheektowaga Town, New York	
NY77	Ithaca City, New York	
NY78	Lancaster Town, New York	
NY79	Mount Vernon City, New York	
NY80	Ogdensburg City, New York	
NY81	Poughkeepsie City, New York	
NY82	Tonawanda Town, New York	

State ID	Qualifying Subdivision	Consolidated State Allocation
NC1	Alamance County, North Carolina	1.3780289676%
NC2	Alexander County, North Carolina	0.5100078796%
NC3	Alleghany County, North Carolina	0.1490905989%
NC4	Anson County, North Carolina	0.1821929604%
NC5	Ashe County, North Carolina	0.3386391883%
NC6	Asheville City, North Carolina	0.2358147243%
NC7	Avery County, North Carolina	0.2659967669%
NC8	Beaufort County, North Carolina	0.4778884349%
NC9	Bertie County, North Carolina	0.1394685751%
NC10	Bladen County, North Carolina	0.4292178095%
NC11	Brunswick County, North Carolina	2.1132385076%
NC12	Buncombe County, North Carolina	2.5115878573%
NC13	Burke County, North Carolina	2.0901968270%
NC14	Cabarrus County, North Carolina	1.6695734466%
NC15	Caldwell County, North Carolina	1.2763011462%
NC16	Camden County, North Carolina	0.0730364004%
NC17	Canton Town, North Carolina	0.0114538232%
NC18	Carteret County, North Carolina	1.1284655939%
NC19	Cary Town, North Carolina	0.1441516454%
NC20	Caswell County, North Carolina	0.1729202375%
NC21	Catawba County, North Carolina	2.0726952227%
NC22	Charlotte City, North Carolina	1.2474838144%
NC23	Chatham County, North Carolina	0.4498143831%
NC24	Cherokee County, North Carolina	0.7827591529%
NC25	Chowan County, North Carolina	0.1137055961%
NC26	Clay County, North Carolina	0.2244299489%
NC27	Cleveland County, North Carolina	1.1199280277%
NC28	Columbus County, North Carolina	1.2209369390%
NC29	Concord City, North Carolina	0.2274558703%
NC30	Craven County, North Carolina	1.3368601902%
NC31	Cumberland County, North Carolina	2.6372996596%
NC32	Currituck County, North Carolina	0.1867785513%
NC33	Dare County, North Carolina	0.5331267313%
NC34	Davidson County, North Carolina	1.9402695304%
NC35	Davie County, North Carolina	0.5131475269%
NC36	Duplin County, North Carolina	0.3827851474%
NC37	Durham City, North Carolina	0.3804050267%
NC38	Durham County, North Carolina	1.7979943624%
NC39	Edgecombe County, North Carolina	0.4171019390%
NC40	Fayetteville City, North Carolina	0.3097690552%
NC41	Forsyth County, North Carolina	3.0684508095%
NC42	Franklin County, North Carolina	0.5005036433%
NC43	Gaston County, North Carolina	3.0981738869%
NC44	Gastonia City, North Carolina	0.2577638238%
NC45	Gates County, North Carolina	0.0795675166%
NC46	Graham County, North Carolina	0.1834845617%
NC47	Granville County, North Carolina	0.5901034093%

State ID	Qualifying Subdivision	Consolidated State Allocation
NC48	Greene County, North Carolina	0.1232748186%
NC49	Greensboro City, North Carolina	0.5273916964%
NC50	Greenville City, North Carolina	0.1626564747%
NC51	Guilford County, North Carolina	3.3750152311%
NC52	Halifax County, North Carolina	0.4531611740%
NC53	Harnett County, North Carolina	0.9889807722%
NC54	Haywood County, North Carolina	0.8033151101%
NC55	Henderson City, North Carolina	0.0322534788%
NC56	Henderson County, North Carolina	1.3815950870%
NC57	Hertford County, North Carolina	0.2068430501%
NC58	Hickory City, North Carolina	0.0948758357%
NC59	High Point City, North Carolina	0.2064287629%
NC60	Hoke County, North Carolina	0.3324858046%
NC61	Hyde County, North Carolina	0.0272373541%
NC62	Iredell County, North Carolina	2.1159313745%
NC63	Jackson County, North Carolina	0.5077577313%
NC64	Jacksonville City, North Carolina	0.0950098698%
NC65	Johnston County, North Carolina	1.2508874682%
NC66	Jones County, North Carolina	0.0879669870%
NC67	Lee County, North Carolina	0.6531156836%
NC68	Lenoir County, North Carolina	0.6042825926%
NC69	Lincoln County, North Carolina	0.9268336271%
NC70	Macon County, North Carolina	0.2377764961%
NC71	Madison County, North Carolina	0.2328822206%
NC72	Martin County, North Carolina	0.5875445765%
NC73	McDowell County, North Carolina	0.4667676661%
NC74	Mecklenburg County, North Carolina	5.0383012599%
NC75	Mitchell County, North Carolina	0.3093141516%
NC76	Montgomery County, North Carolina	0.2260505430%
NC77	Moore County, North Carolina	0.9717391128%
NC78	Nash County, North Carolina	0.8456536396%
NC79	New Hanover County, North Carolina	2.8972648920%
NC80	Northampton County, North Carolina	0.1209962389%
NC81	Onslow County, North Carolina	1.6440013647%
NC82	Orange County, North Carolina	1.0558394190%
NC83	Pamlico County, North Carolina	0.1199361510%
NC84	Pasquotank County, North Carolina	0.3748162108%
NC85	Pender County, North Carolina	0.5857493319%
NC86	Perquimans County, North Carolina	0.1118331803%
NC87	Person County, North Carolina	0.4030242967%
NC88	Pitt County, North Carolina	1.3690080664%
NC89	Polk County, North Carolina	0.2661429860%
NC90	Raleigh City, North Carolina	0.5667246127%

State ID	Qualifying Subdivision	Consolidated State Allocation
NC91	Randolph County, North Carolina	1.5254339862%
NC92	Richmond County, North Carolina	0.7491328400%
NC93	Robeson County, North Carolina	1.3597353436%
NC94	Rockingham County, North Carolina	1.3653688375%
NC95	Rowan County, North Carolina	2.3352192879%
NC96	Rutherford County, North Carolina	0.9289416180%
NC97	Sampson County, North Carolina	0.6195137405%
NC98	Scotland County, North Carolina	0.4491482742%
NC99	Stanly County, North Carolina	0.7249742086%
NC100	Stokes County, North Carolina	0.6239531124%
NC101	Surry County, North Carolina	1.4108267061%
NC102	Swain County, North Carolina	0.2811629286%
NC103	Transylvania County, North Carolina	0.4975955095%
NC104	Tyrrell County, North Carolina	0.0414409072%
NC105	Union County, North Carolina	1.4667026799%
NC106	Vance County, North Carolina	0.5362582553%
NC107	Wake County, North Carolina	4.9024556672%
NC108	Warren County, North Carolina	0.1063905835%
NC109	Washington County, North Carolina	0.0747707205%
NC110	Watauga County, North Carolina	0.4696757999%
NC111	Wayne County, North Carolina	0.9706993331%
NC112	Wilkes County, North Carolina	1.9971771606%
NC113	Wilmington City, North Carolina	0.1194974940%
NC114	Wilson County, North Carolina	0.6464708415%
NC115	Winston-Salem City, North Carolina	0.4944599238%
NC116	Yadkin County, North Carolina	0.5621471451%
NC117	Yancey County, North Carolina	0.3821149769%

State ID	Qualifying Subdivision	Consolidated State Allocation
ND1	Adams County, North Dakota	0.3266859369%
ND2	Barnes County, North Dakota	1.1596409120%
ND3	Benson County, North Dakota	0.8243618844%
ND4	Billings County, North Dakota	0.0531198558%
ND5	Bismarck City, North Dakota	7.8720018475%
ND6	Bottineau County, North Dakota	0.6564106964%
ND7	Bowman County, North Dakota	0.3537618912%
ND8	Burke County, North Dakota	0.1340272238%
ND9	Burleigh County, North Dakota	5.9258321732%
ND10	Cass County, North Dakota	9.2593207065%
ND11	Cavalier County, North Dakota	0.4775832577%
ND12	Devils Lake City, North Dakota	0.3622623619%
ND13	Dickey County, North Dakota	0.6064663883%
ND14	Dickinson City, North Dakota	1.0573324109%
ND15	Divide County, North Dakota	0.1925705034%
ND16	Dunn County, North Dakota	0.5017615248%
ND17	Eddy County, North Dakota	0.2227970127%
ND18	Emmons County, North Dakota	0.7218887252%
ND19	Fargo City, North Dakota	12.8639966005%
ND20	Foster County, North Dakota	0.3938546507%
ND21	Golden Valley County, North Dakota	0.2278631874%
ND22	Grand Forks City, North Dakota	7.1999971538%
ND23	Grand Forks County, North Dakota	5.4639296523%
ND24	Grant County, North Dakota	0.2093626818%
ND25	Griggs County, North Dakota	0.2073426807%
ND26	Hettinger County, North Dakota	0.2096684753%
ND27	Jamestown City, North Dakota	0.7024664288%
ND28	Kidder County, North Dakota	0.3074782839%
ND29	La Moure County, North Dakota	0.3036088203%
ND30	Lisbon City, North Dakota	0.1372424658%
ND31	Logan County, North Dakota	0.1641331799%
ND32	Mandan City, North Dakota	1.1262932510%
ND33	McHenry County, North Dakota	0.3973374621%
ND34	McIntosh County, North Dakota	0.2870077627%
ND35	McKenzie County, North Dakota	1.2312553926%
ND36	McLean County, North Dakota	1.1384661837%
ND37	Mercer County, North Dakota	1.1241071216%
ND38	Minot City, North Dakota	2.8909627339%
ND39	Morton County, North Dakota	2.6703636118%
ND40	Mountrail County, North Dakota	1.1142893867%
ND41	Nelson County, North Dakota	0.4740975060%
ND42	Oliver County, North Dakota	0.2228234756%
ND43	Pembina County, North Dakota	1.2530005434%
ND44	Pierce County, North Dakota	0.7284574044%
ND45	Ramsey County, North Dakota	1.2734343106%
ND46	Ransom County, North Dakota	0.6183673413%
ND47	Renville County, North Dakota	0.2860845016%

State ID	Qualifying Subdivision	Consolidated State Allocation
ND48	Richland County, North Dakota	2.4309493698%
ND49	Rolette County, North Dakota	1.8198034592%
ND50	Sargent County, North Dakota	0.5773674924%
ND51	Sheridan County, North Dakota	0.0895886685%
ND52	Sioux County, North Dakota	0.6666209643%
ND53	Slope County, North Dakota	0.0470907257%
ND54	Stark County, North Dakota	3.3526741338%
ND55	Steele County, North Dakota	0.2434939387%
ND56	Stutsman County, North Dakota	1.9758860377%
ND57	Towner County, North Dakota	0.1807489391%
ND58	Traill County, North Dakota	1.0587643476%
ND59	Walsh County, North Dakota	2.0521094729%
ND60	Ward County, North Dakota	3.4849842097%
ND61	Wells County, North Dakota	0.4346604383%
ND62	West Fargo City, North Dakota	1.8417059171%
ND63	Williams County, North Dakota	2.3067369406%
ND64	Williston City, North Dakota	1.5016973817%

State ID	Qualifying Subdivision	Consolidated State Allocation
OH1	Aberdeen Village, Ohio	0.0087437716%
OH2	Ada Village, Ohio	0.0077636351%
OH3	Adams County, Ohio	0.3473544585%
OH4	Adams Township, Champaign County, Ohio	0.0001374611%
OH5	Adams Township, Clinton County, Ohio	0.0003122525%
OH6	Adams Township, Darke County, Ohio	0.0016731027%
OH7	Adams Township, Monroe County, Ohio	0.0000311703%
OH8	Adams Township, Muskingum County, Ohio	0.0001003092%
OH9	Adams Township, Seneca County, Ohio	0.0003810303%
OH10	Adams Township, Washington County, Ohio	0.0001169753%
OH11	Adamsville Village, Ohio	0.0000910884%
OH12	Addyston Village, Ohio	0.0025217854%
OH13	Adelphi Village, Ohio	0.0020068066%
OH14	Adena Village, Ohio	0.0003568983%
OH15	Aid Township, Ohio	0.0003303244%
OH16	Akron City, Ohio	0.8812077621%
OH17	Albany Village, Ohio	0.0019488925%
OH18	Alexander Township, Ohio	0.0001250626%
OH19	Alexandria Village, Ohio	0.0005560173%
OH20	Alger Village, Ohio	0.0005166462%
OH21	Allen County, Ohio	0.4092999560%
OH22	Allen Township, Darke County, Ohio	0.0006643202%
OH23	Allen Township, Hancock County, Ohio	0.0005903230%
OH24	Allen Township, Ottawa County, Ohio	0.0005976710%
OH25	Allen Township, Union County, Ohio	0.0028518922%
OH26	Alliance City, Ohio	0.0889490116%
OH27	Amanda Township, Fairfield County, Ohio	0.0018577114%
OH28	Amanda Township, Hancock County, Ohio	0.0001616361%
OH29	Amanda Village, Ohio	0.0005782400%
OH30	Amberley Village, Ohio	0.0192140009%
OH31	Amboy Township, Ohio	0.0017244001%
OH32	Amelia Village, Ohio	0.0138770427%
OH33	American Township, Ohio	0.0193901533%
OH34	Ames Township, Ohio	0.0004272973%
OH35	Amesville Village, Ohio	0.0000937970%
OH36	Amherst City, Ohio	0.0344767089%

State ID	Qualifying Subdivision	Consolidated State Allocation
OH37	Amherst Township, Ohio	0.0134400730%
OH38	Amsterdam Village, Ohio	0.0003984552%
OH39	Anderson Township, Ohio	0.0760877775%
OH40	Andover Township, Ohio	0.0010566751%
OH41	Andover Village, Ohio	0.0040505880%
OH42	Anna Village, Ohio	0.0028751504%
OH43	Ansonia Village, Ohio	0.0014885693%
OH44	Antioch Village, Ohio	0.0000311703%
OH45	Antwerp Village, Ohio	0.0009282725%
OH46	Apple Creek Village, Ohio	0.0004832518%
OH47	Aquilla Village, Ohio	0.0000095709%
OH48	Arcadia Village, Ohio	0.0000210830%
OH49	Arcanum Village, Ohio	0.0034200188%
OH50	Archbold Village, Ohio	0.0168893369%
OH51	Arlington Heights Village, Ohio	0.0024048815%
OH52	Arlington Village, Ohio	0.0017280808%
OH53	Ashland City, Ohio	0.0677959091%
OH54	Ashland County, Ohio	0.2064379332%
OH55	Ashley Village, Ohio	0.0012125812%
OH56	Ashtabula City, Ohio	0.0931048204%
OH57	Ashtabula County, Ohio	0.7429130666%
OH58	Ashtabula Township, Ohio	0.0174821031%
OH59	Ashville Village, Ohio	0.0024582550%
OH60	Athalia Village, Ohio	0.0000173855%
OH61	Athens City, Ohio	0.0700871751%
OH62	Athens County, Ohio	0.4584170235%
OH63	Athens Township, Athens County, Ohio	0.0025846274%
OH64	Athens Township, Harrison County, Ohio	0.0003148983%
OH65	Attica Village, Ohio	0.0007921419%
OH66	Atwater Township, Ohio	0.0004753019%
OH67	Auburn Township, Crawford County, Ohio	0.0007613308%
OH68	Auburn Township, Geauga County, Ohio	0.0067953249%
OH69	Auburn Township, Tuscarawas County, Ohio	0.0000098536%
OH70	Auglaize County, Ohio	0.1648586210%
OH71	Auglaize Township, Allen County, Ohio	0.0010226874%
OH72	Auglaize Township, Paulding County, Ohio	0.0000730923%
OH73	Augusta Township, Ohio	0.0004684152%
OH74	Aurelius Township, Ohio	0.0000083554%
OH75	Aurora City, Ohio	0.0294524674%
OH76	Austinburg Township, Ohio	0.0004813742%
OH77	Austintown Township, Ohio	0.0890063352%
OH78	Avon City, Ohio	0.0729757005%

State ID	Qualifying Subdivision	Consolidated State Allocation
OH79	Avon Lake City, Ohio	0.0663140992%
OH80	Bailey Lakes Village, Ohio	0.0000813388%
OH81	Bainbridge Township, Ohio	0.0406379571%
OH82	Bainbridge Village, Ohio	0.0022724133%
OH83	Bairdstown Village, Ohio	0.0000612234%
OH84	Ballville Township, Ohio	0.0021521086%
OH85	Baltic Village, Ohio	0.0009410120%
OH86	Baltimore Village, Ohio	0.0031532207%
OH87	Barberton City, Ohio	0.1164193916%
OH88	Barlow Township, Ohio	0.0003258598%
OH89	Barnesville Village, Ohio	0.0106861443%
OH90	Barnhill Village, Ohio	0.0006601909%
OH91	Bartlow Township, Ohio	0.0001082864%
OH92	Batavia Township, Ohio	0.0000517157%
OH93	Batavia Village, Ohio	0.0047750818%
OH94	Batesville Village, Ohio	0.0000517432%
OH95	Bath Township, Allen County, Ohio	0.0088564730%
OH96	Bath Township, Greene County, Ohio	0.0001754181%
OH97	Bath Township, Summit County, Ohio	0.0489522386%
OH98	Baughman Township, Ohio	0.0001353105%
OH99	Bay Township, Ohio	0.0000549583%
OH100	Bay View Village, Ohio	0.0012986334%
OH101	Bay Village City, Ohio	0.0295102794%
OH102	Bazetta Township, Ohio	0.0331455317%
OH103	Beach City Village, Ohio	0.0006531299%
OH104	Beachwood City, Ohio	0.0573216138%
OH105	Beallsville Village, Ohio	0.0001580913%
OH106	Bearfield Township, Ohio	0.0005486478%
OH107	Beaver Township, Mahoning County, Ohio	0.0148139167%
OH108	Beaver Township, Pike County, Ohio	0.0003380168%
OH109	Beaver Village, Ohio	0.0001859093%
OH110	Beavercreek City, Ohio	0.0843658046%
OH111	Beavercreek Township, Ohio	0.1348759090%
OH112	Beaverdam Village, Ohio	0.0000749971%
OH113	Bedford City, Ohio	0.0429793572%
OH114	Bedford Heights City, Ohio	0.0386687782%
OH115	Bedford Township, Ohio	0.0000306151%
OH116	Bellaire Village, Ohio	0.0010264323%
OH117	Bellbrook City, Ohio	0.0237949542%
OH118	Belle Center Village, Ohio	0.0005231767%
OH119	Belle Valley Village, Ohio	0.0001073626%
OH120	Bellefontaine City, Ohio	0.0729400123%
OH121	Bellevue City, Ohio	0.0299834456%
OH122	Bellville Village, Ohio	0.0011239941%

State ID	Qualifying Subdivision	Consolidated State Allocation
OH123	Belmont County, Ohio	0.4904799617%
OH124	Belmont Village, Ohio	0.0011248573%
OH125	Belmore Village, Ohio	0.0002483511%
OH126	Beloit Village, Ohio	0.0037587550%
OH127	Belpre City, Ohio	0.0099429019%
OH128	Belpre Township, Ohio	0.0009358025%
OH129	Bennington Township, Licking County, Ohio	0.0005560173%
OH130	Bennington Township, Morrow County, Ohio	0.0001476031%
OH131	Bentleyville Village, Ohio	0.0019992236%
OH132	Benton Ridge Village, Ohio	0.0000914068%
OH133	Benton Township, Hocking County, Ohio	0.0001089904%
OH134	Benton Township, Ottawa County, Ohio	0.0007968947%
OH135	Benton Township, Paulding County, Ohio	0.0002485139%
OH136	Benton Township, Pike County, Ohio	0.0003718185%
OH137	Berea City, Ohio	0.0293403849%
OH138	Bergholz Village, Ohio	0.0002390731%
OH139	Berkey Village, Ohio	0.0003639406%
OH140	Berkshire Township, Ohio	0.0000742397%
OH141	Berlin Heights Village, Ohio	0.0009142379%
OH142	Berlin Township, Delaware County, Ohio	0.0000164977%
OH143	Berlin Township, Erie County, Ohio	0.0001350579%
OH144	Berlin Township, Holmes County, Ohio	0.0000814306%
OH145	Berlin Township, Mahoning County, Ohio	0.0014985886%
OH146	Bern Township, Ohio	0.0001354845%
OH147	Berne Township, Ohio	0.0001629571%
OH148	Bethel Township, Clark County, Ohio	0.0138134025%
OH149	Bethel Township, Monroe County, Ohio	0.0000498724%
OH150	Bethel Village, Ohio	0.0057576798%
OH151	Bethesda Village, Ohio	0.0006889751%
OH152	Bethlehem Township, Coshocton County, Ohio	0.0000765378%
OH153	Bethlehem Township, Stark County, Ohio	0.0015140738%
OH154	Bettsville Village, Ohio	0.0009525757%
OH155	Beverly Village, Ohio	0.0019551589%
OH156	Bexley City, Ohio	0.0458668476%
OH157	Big Island Township, Ohio	0.0005578783%

State ID	Qualifying Subdivision	Consolidated State Allocation
OH158	Black Creek Township, Ohio	0.0001534027%
OH159	Blakeslee Village, Ohio	0.0000628635%
OH160	Blanchard Township, Hancock County, Ohio	0.0001475808%
OH161	Blanchard Township, Putnam County, Ohio	0.0006457128%
OH162	Blanchester Village, Ohio	0.0114641267%
OH163	Blendon Township, Ohio	0.0282639366%
OH164	Bloom Township, Fairfield County, Ohio	0.0118551321%
OH165	Bloom Township, Morgan County, Ohio	0.0001713719%
OH166	Bloom Township, Scioto County, Ohio	0.0000852977%
OH167	Bloom Township, Seneca County, Ohio	0.0009926842%
OH168	Bloomdale Village, Ohio	0.0005693772%
OH169	Bloomfield Township, Jackson County, Ohio	0.0013260530%
OH170	Bloomfield Township, Logan County, Ohio	0.0000099754%
OH171	Bloomingburg Village, Ohio	0.0002078369%
OH172	Bloomingdale Village, Ohio	0.0002231349%
OH173	Bloominggrove Township, Ohio	0.0001784118%
OH174	Bloomville Village, Ohio	0.0004411930%
OH175	Blue Ash City, Ohio	0.0851895858%
OH176	Blue Creek Township, Ohio	0.0000767469%
OH177	Blue Rock Township, Ohio	0.0001103402%
OH178	Bluffton Village, Ohio	0.0052836661%
OH179	Boardman Township, Ohio	0.1408673271%
OH180	Bokescreek Township, Ohio	0.0013367015%
OH181	Bolivar Village, Ohio	0.0004434118%
OH182	Boston Heights Village, Ohio	0.0077201699%
OH183	Boston Township, Ohio	0.0003662503%
OH184	Botkins Village, Ohio	0.0019522626%
OH185	Bowerston Village, Ohio	0.0000572542%
OH186	Bowersville Village, Ohio	0.0000916319%
OH187	Bowling Green City, Ohio	0.0752741164%
OH188	Bowling Green Township, Ohio	0.0000370678%
OH189	Braceville Township, Ohio	0.0037680877%
OH190	Bradford Village, Ohio	0.0028661348%
OH191	Bradner Village, Ohio	0.0009183503%
OH192	Brady Lake Village, Ohio	0.0002559318%
OH193	Brady Township, Ohio	0.0005029083%
OH194	Bratenahl Village, Ohio	0.0051323943%
OH195	Bratton Township, Ohio	0.0000790580%
OH196	Brecksville City, Ohio	0.0241013127%
OH197	Bremen Village, Ohio	0.0006844200%
OH198	Brewster Village, Ohio	0.0058880648%

State ID	Qualifying Subdivision	Consolidated State Allocation
OH199	Brice Village, Ohio	0.0005574892%
OH200	Bridgeport Village, Ohio	0.0050477971%
OH201	Bridgewater Township, Ohio	0.0004164709%
OH202	Brighton Township, Ohio	0.0000194784%
OH203	Brimfield Township, Ohio	0.0111960000%
OH204	Bristol Township, Morgan County, Ohio	0.0001285289%
OH205	Bristol Township, Trumbull County, Ohio	0.0252513027%
OH206	Broadview Heights City, Ohio	0.0226789401%
OH207	Bronson Township, Ohio	0.0009334281%
OH208	Brook Park City, Ohio	0.0389572037%
OH209	Brookfield Township, Noble County, Ohio	0.0000517432%
OH210	Brookfield Township, Trumbull County, Ohio	0.0346459468%
OH211	Brooklyn City, Ohio	0.0212407634%
OH212	Brooklyn Heights Village, Ohio	0.0100909430%
OH213	Brookside Village, Ohio	0.0001124857%
OH214	Brookville City, Ohio	0.0216648650%
OH215	Broughton Village, Ohio	0.0000073092%
OH216	Brown County, Ohio	0.4653422837%
OH217	Brown Township, Carroll County, Ohio	0.0009477238%
OH218	Brown Township, Darke County, Ohio	0.0007873425%
OH219	Brown Township, Delaware County, Ohio	0.0000082489%
OH220	Brown Township, Franklin County, Ohio	0.0003894787%
OH221	Brown Township, Knox County, Ohio	0.0039027192%
OH222	Brown Township, Miami County, Ohio	0.0006132702%
OH223	Brown Township, Paulding County, Ohio	0.0001315662%
OH224	Brown Township, Vinton County, Ohio	0.0000390135%
OH225	Brunswick City, Ohio	0.1197413086%
OH226	Brunswick Hills Township, Ohio	0.0200631640%
OH227	Brush Creek Township, Jefferson County, Ohio	0.0001275057%
OH228	Brush Creek Township, Scioto County, Ohio	0.0011088700%
OH229	Brushcreek Township, Ohio	0.0059850824%
OH230	Bryan City, Ohio	0.0285400457%
OH231	Buchtel Village, Ohio	0.0001849243%
OH232	Buckeye Lake Village, Ohio	0.0040562680%
OH233	Buckland Village, Ohio	0.0001068314%

State ID	Qualifying Subdivision	Consolidated State Allocation
OH234	Bucks Township, Ohio	0.0002857543%
OH235	Bucyrus City, Ohio	0.0467130847%
OH236	Bucyrus Township, Ohio	0.0002175231%
OH237	Buffalo Township, Ohio	0.0000689910%
OH238	Burbank Village, Ohio	0.0001559017%
OH239	Burgoon Village, Ohio	0.0001532454%
OH240	Burkettsville Village, Ohio	0.0000203512%
OH241	Burlington Township, Ohio	0.0012973736%
OH242	Burton Township, Ohio	0.0022682986%
OH243	Burton Village, Ohio	0.0036177927%
OH244	Butler County, Ohio	2.6887406714%
OH245	Butler Township, Columbiana County, Ohio	0.0017704304%
OH246	Butler Township, Darke County, Ohio	0.0006643202%
OH247	Butler Township, Mercer County, Ohio	0.0021025197%
OH248	Butler Township, Montgomery County, Ohio	0.0308007959%
OH249	Butler Township, Richland County, Ohio	0.0003925059%
OH250	Butler Village, Ohio	0.0004817118%
OH251	Butlerville Village, Ohio	0.0001866800%
OH252	Byesville Village, Ohio	0.0018493145%
OH253	Byrd Township, Ohio	0.0018293707%
OH254	Cadiz Township, Ohio	0.0013359320%
OH255	Cadiz Village, Ohio	0.0042081859%
OH256	Caesarscreek Township, Ohio	0.0004643421%
OH257	Cairo Village, Ohio	0.0000409075%
OH258	Caldwell Village, Ohio	0.0017937650%
OH259	Caledonia Village, Ohio	0.0007098142%
OH260	Cambridge City, Ohio	0.0668200845%
OH261	Cambridge Township, Ohio	0.0000951853%
OH262	Camden Township, Ohio	0.0003116539%
OH263	Camden Village, Ohio	0.0031099397%
OH264	Camp Creek Township, Ohio	0.0001943597%
OH265	Campbell City, Ohio	0.0206854359%
OH266	Canaan Township, Morrow County, Ohio	0.0000885618%
OH267	Canaan Township, Wayne County, Ohio	0.0002435589%
OH268	Canal Fulton City, Ohio	0.0143391696%
OH269	Canal Winchester City, Ohio	0.0017001990%
OH270	Canfield City, Ohio	0.0340253310%
OH271	Canfield Township, Ohio	0.0024198521%
OH272	Canton City, Ohio	0.4906093929%
OH273	Canton Township, Ohio	0.0238293446%
OH274	Cardington Village, Ohio	0.0026450469%
OH275	Carey Village, Ohio	0.0048237347%

State ID	Qualifying Subdivision	Consolidated State Allocation
OH276	Carlisle Township, Ohio	0.0046455904%
OH277	Carlisle Village, Ohio	0.0081658806%
OH278	Carroll County, Ohio	0.1274960868%
OH279	Carroll Township, Ohio	0.0031394902%
OH280	Carroll Village, Ohio	0.0008718207%
OH281	Carrollton Village, Ohio	0.0061329714%
OH282	Carryall Township, Ohio	0.0000511646%
OH283	Carthage Township, Ohio	0.0002397033%
OH284	Cass Township, Muskingum County, Ohio	0.0002006185%
OH285	Cass Township, Richland County, Ohio	0.0007850118%
OH286	Casstown Village, Ohio	0.0005337723%
OH287	Castalia Village, Ohio	0.0011427974%
OH288	Castine Village, Ohio	0.0005289957%
OH289	Catawba Island Township, Ohio	0.0060247984%
OH290	Catawba Village, Ohio	0.0002313575%
OH291	Cecil Village, Ohio	0.0000109638%
OH292	Cedarville Township, Ohio	0.0036837809%
OH293	Cedarville Village, Ohio	0.0036321873%
OH294	Celina City, Ohio	0.0165674940%
OH295	Center Township, Carroll County, Ohio	0.0001634007%
OH296	Center Township, Columbiana County, Ohio	0.0003327877%
OH297	Center Township, Guernsey County, Ohio	0.0001903706%
OH298	Center Township, Mercer County, Ohio	0.0004241134%
OH299	Center Township, Monroe County, Ohio	0.0005361288%
OH300	Center Township, Morgan County, Ohio	0.0000535537%
OH301	Center Township, Noble County, Ohio	0.0001724774%
OH302	Center Township, Williams County, Ohio	0.0005107662%
OH303	Center Township, Wood County, Ohio	0.0002510158%
OH304	Centerburg Village, Ohio	0.0041342364%
OH305	Centerville City, Ohio	0.0591550598%
OH306	Centerville Village, Ohio	0.0005060807%
OH307	Cessna Township, Ohio	0.0001110677%
OH308	Chagrin Falls Township, Ohio	0.0000039510%
OH309	Chagrin Falls Village, Ohio	0.0125168784%
OH310	Champaign County, Ohio	0.2269483026%
OH311	Champion Township, Ohio	0.0283714840%
OH312	Chardon City, Ohio	0.0479405386%
OH313	Chardon Township, Ohio	0.0039336317%

State ID	Qualifying Subdivision	Consolidated State Allocation
OH314	Charlestown Township, Ohio	0.0000121872%
OH315	Chatfield Township, Ohio	0.0008265878%
OH316	Chatfield Village, Ohio	0.0000870092%
OH317	Chatham Township, Ohio	0.0003778818%
OH318	Chauncey Village, Ohio	0.0000833751%
OH319	Cherry Fork Village, Ohio	0.0004264208%
OH320	Cherry Valley Township, Ohio	0.0004696334%
OH321	Chesapeake Village, Ohio	0.0021905725%
OH322	Cheshire Township, Ohio	0.0010496489%
OH323	Cheshire Village, Ohio	0.0001686936%
OH324	Chester Township, Clinton County, Ohio	0.0019181224%
OH325	Chester Township, Geauga County, Ohio	0.0252766944%
OH326	Chester Township, Morrow County, Ohio	0.0005136587%
OH327	Chester Township, Wayne County, Ohio	0.0004213956%
OH328	Chesterhill Village, Ohio	0.0000958805%
OH329	Chesterville Village, Ohio	0.0000531371%
OH330	Cheviot City, Ohio	0.0177109500%
OH331	Chickasaw Village, Ohio	0.0003251707%
OH332	Chillicothe City, Ohio	0.3116747707%
OH333	Chilo Village, Ohio	0.0001537865%
OH334	Chippewa Lake Village, Ohio	0.0005077787%
OH335	Chippewa Township, Ohio	0.0025863636%
OH336	Christiansburg Village, Ohio	0.0002537744%
OH337	Cincinnati City, Ohio	1.9225774768%
OH338	Circleville City, Ohio	0.3452050773%
OH339	Circleville Township, Ohio	0.0006412839%
OH340	Claibourne Township, Ohio	0.0000211028%
OH341	Claridon Township, Ohio	0.0025745668%
OH342	Clarington Village, Ohio	0.0000498724%
OH343	Clark County, Ohio	1.2151983585%
OH344	Clark Township, Brown County, Ohio	0.0053640868%
OH345	Clark Township, Clinton County, Ohio	0.0010928837%
OH346	Clarksburg Village, Ohio	0.0000295119%
OH347	Clarksfield Township, Ohio	0.0007412517%
OH348	Clarksville Village, Ohio	0.0004237712%
OH349	Clay Center Village, Ohio	0.0000618280%
OH350	Clay Township, Auglaize County, Ohio	0.0004451307%
OH351	Clay Township, Highland County, Ohio	0.0003613635%
OH352	Clay Township, Montgomery County, Ohio	0.0058148642%

State ID	Qualifying Subdivision	Consolidated State Allocation
OH353	Clay Township, Muskingum County, Ohio	0.0004012369%
OH354	Clay Township, Ottawa County, Ohio	0.0026311263%
OH355	Clay Township, Scioto County, Ohio	0.0064826249%
OH356	Clay Township, Tuscarawas County, Ohio	0.0000492680%
OH357	Clayton City, Ohio	0.0375148659%
OH358	Clayton Township, Ohio	0.0004303120%
OH359	Clear Creek Township, Ohio	0.0874295648%
OH360	Clearcreek Township, Ohio	0.0010918129%
OH361	Clermont County, Ohio	1.9148422650%
OH362	Cleveland City, Ohio	1.8006406770%
OH363	Cleveland Heights City, Ohio	0.0861404621%
OH364	Cleves Village, Ohio	0.0031981583%
OH365	Clifton Village, Ohio	0.0002996729%
OH366	Clinton County, Ohio	0.4003299792%
OH367	Clinton Township, Franklin County, Ohio	0.0107832149%
OH368	Clinton Township, Fulton County, Ohio	0.0006481787%
OH369	Clinton Township, Seneca County, Ohio	0.0007420064%
OH370	Clinton Township, Shelby County, Ohio	0.0005501831%
OH371	Clinton Township, Vinton County, Ohio	0.0002860993%
OH372	Clinton Township, Wayne County, Ohio	0.0001933007%
OH373	Clinton Village, Ohio	0.0011373034%
OH374	Cloverdale Village, Ohio	0.0001986809%
OH375	Clyde City, Ohio	0.0219912947%
OH376	Coal Grove Village, Ohio	0.0050070228%
OH377	Coal Township, Jackson County, Ohio	0.0004972699%
OH378	Coal Township, Perry County, Ohio	0.0003550074%
OH379	Coalton Village, Ohio	0.0024310971%
OH380	Coitsville Township, Ohio	0.0048028536%
OH381	Coldwater Village, Ohio	0.0054593322%
OH382	Colerain Township, Belmont County, Ohio	0.0006046108%
OH383	Colerain Township, Hamilton County, Ohio	0.1398087860%
OH384	College Corner Village, Ohio	0.0022611881%
OH385	College Township, Ohio	0.0028608916%
OH386	Columbia Township, Hamilton County, Ohio	0.0091268592%

State ID	Qualifying Subdivision	Consolidated State Allocation
OH387	Columbia Township, Lorain County, Ohio	0.0044508068%
OH388	Columbia Township, Meigs County, Ohio	0.0000676625%
OH389	Columbiana City, Ohio	0.0212455929%
OH390	Columbiana County, Ohio	0.6832396894%
OH391	Columbus City, Ohio	4.0358741733%
OH392	Columbus Grove Village, Ohio	0.0013907661%
OH393	Commercial Point Village, Ohio	0.0008841945%
OH394	Concord Township, Delaware County, Ohio	0.0132064120%
OH395	Concord Township, Fayette County, Ohio	0.0003201811%
OH396	Concord Township, Highland County, Ohio	0.0000677557%
OH397	Concord Township, Lake County, Ohio	0.0329119594%
OH398	Concord Township, Miami County, Ohio	0.0048266640%
OH399	Concord Township, Ross County, Ohio	0.0034233759%
OH400	Conesville Village, Ohio	0.0001949904%
OH401	Congress Township, Morrow County, Ohio	0.0000354247%
OH402	Congress Township, Wayne County, Ohio	0.0000386601%
OH403	Congress Village, Ohio	0.0001394121%
OH404	Conneaut City, Ohio	0.0500864015%
OH405	Continental Village, Ohio	0.0013742094%
OH406	Convoy Village, Ohio	0.0015735393%
OH407	Coolville Village, Ohio	0.0002918128%
OH408	Copley Township, Ohio	0.0644889601%
OH409	Corning Village, Ohio	0.0010865378%
OH410	Cortland City, Ohio	0.0349699000%
OH411	Corwin Village, Ohio	0.0004993129%
OH412	Coshocton City, Ohio	0.0177337984%
OH413	Coshocton County, Ohio	0.1889793769%
OH414	Coventry Township, Ohio	0.0112670146%
OH415	Covington Village, Ohio	0.0077226624%
OH416	Craig Beach Village, Ohio	0.0004176394%
OH417	Cranberry Township, Ohio	0.0001631423%
OH418	Crane Township, Paulding County, Ohio	0.0001169477%
OH419	Crane Township, Wyandot County, Ohio	0.0005667045%
OH420	Crawford County, Ohio	0.2595376809%
OH421	Crawford Township, Coshocton County, Ohio	0.0002372670%

State ID	Qualifying Subdivision	Consolidated State Allocation
OH422	Crawford Township, Wyandot County, Ohio	0.0001079437%
OH423	Crestline Village, Ohio	0.0166501207%
OH424	Creston Village, Ohio	0.0007596505%
OH425	Cridersville Village, Ohio	0.0045581388%
OH426	Crooksville Village, Ohio	0.0043353934%
OH427	Crosby Township, Ohio	0.0044757516%
OH428	Cross Creek Township, Ohio	0.0061202713%
OH429	Crown City Village, Ohio	0.0005435682%
OH430	Cumberland Village, Ohio	0.0007050617%
OH431	Custar Village, Ohio	0.0000244893%
OH432	Cuyahoga Falls City, Ohio	0.1811685822%
OH433	Cuyahoga Heights Village, Ohio	0.0193798260%
OH434	Cygnet Village, Ohio	0.0002510158%
OH435	Cynthian Township, Ohio	0.0000266218%
OH436	Dallas Township, Ohio	0.0001522662%
OH437	Dalton Village, Ohio	0.0011945985%
OH438	Damascus Township, Ohio	0.0007850761%
OH439	Danbury Township, Ohio	0.0038539475%
OH440	Danville Village, Ohio	0.0021828768%
OH441	Darby Township, Madison County, Ohio	0.0011346056%
OH442	Darby Township, Union County, Ohio	0.0004220559%
OH443	Darbyville Village, Ohio	0.0000242911%
OH444	Darke County, Ohio	0.2651621760%
OH445	Dayton City, Ohio	1.3353086202%
OH446	De Graff Village, Ohio	0.0013067754%
OH447	Decatur Township, Lawrence County, Ohio	0.0001043130%
OH448	Decatur Township, Washington County, Ohio	0.0001169753%
OH449	Deer Park City, Ohio	0.0107468140%
OH450	Deercreek Township, Ohio	0.0004275226%
OH451	Deerfield Township, Portage County, Ohio	0.0008693556%
OH452	Deerfield Township, Ross County, Ohio	0.0015346168%
OH453	Deerfield Township, Warren County, Ohio	0.1151454582%
OH454	Deersville Village, Ohio	0.0000209231%
OH455	Defiance City, Ohio	0.0658767007%
OH456	Defiance County, Ohio	0.1709704524%
OH457	Defiance Township, Ohio	0.0007172505%
OH458	Delaware City, Ohio	0.1151374756%
OH459	Delaware County, Ohio	0.4816174702%
OH460	Delaware Township, Defiance County, Ohio	0.0015007088%

State ID	Qualifying Subdivision	Consolidated State Allocation
OH461	Delaware Township, Delaware County, Ohio	0.0075064553%
OH462	Delaware Township, Hancock County, Ohio	0.0001335254%
OH463	Delhi Township, Ohio	0.0630446356%
OH464	Dellroy Village, Ohio	0.0002505477%
OH465	Delphos City, Ohio	0.0171051813%
OH466	Delta Village, Ohio	0.0085241620%
OH467	Dennison Village, Ohio	0.0062570335%
OH468	Deshler Village, Ohio	0.0009475056%
OH469	Dexter City Village, Ohio	0.0000689910%
OH470	Dillonvale Village, Ohio	0.0012431801%
OH471	Dinsmore Township, Ohio	0.0004170743%
OH472	Dodson Township, Ohio	0.0105924667%
OH473	Donnelsville Village, Ohio	0.0002721853%
OH474	Dorset Township, Ohio	0.0001174083%
OH475	Dover City, Ohio	0.0416708574%
OH476	Dover Township, Athens County, Ohio	0.0005002505%
OH477	Dover Township, Tuscarawas County, Ohio	0.0000886824%
OH478	Dover Township, Union County, Ohio	0.0005124965%
OH479	Doylestown Village, Ohio	0.0020721837%
OH480	Dresden Village, Ohio	0.0028086586%
OH481	Dublin City, Ohio	0.0949912950%
OH482	Dublin Township, Ohio	0.0004331371%
OH483	Duchouquet Township, Ohio	0.0010861190%
OH484	Dunham Township, Ohio	0.0004344797%
OH485	Dunkirk Village, Ohio	0.0005233559%
OH486	Dupont Village, Ohio	0.0006622696%
OH487	Eagle Township, Brown County, Ohio	0.0090538344%
OH488	Eagle Township, Vinton County, Ohio	0.0002210767%
OH489	East Canton Village, Ohio	0.0024838727%
OH490	East Cleveland City, Ohio	0.0558083674%
OH491	East Liverpool City, Ohio	0.0368861843%
OH492	East Palestine Village, Ohio	0.0165861370%
OH493	East Sparta Village, Ohio	0.0004354199%
OH494	East Union Township, Ohio	0.0003556733%
OH495	Eastlake City, Ohio	0.0700788770%
OH496	Eaton City, Ohio	0.0615604375%
OH497	Eaton Township, Ohio	0.0004480024%
OH498	Eden Township, Licking County, Ohio	0.0004448138%
OH499	Eden Township, Seneca County, Ohio	0.0001102982%

State ID	Qualifying Subdivision	Consolidated State Allocation
OH500	Eden Township, Wyandot County, Ohio	0.0000944507%
OH501	Edgerton Village, Ohio	0.0042354308%
OH502	Edinburg Township, Ohio	0.0011740363%
OH503	Edison Village, Ohio	0.0001948360%
OH504	Edon Village, Ohio	0.0013908558%
OH505	Eldorado Village, Ohio	0.0003273621%
OH506	Elgin Village, Ohio	0.0000619504%
OH507	Elida Village, Ohio	0.0011181382%
OH508	Elizabeth Township, Lawrence County, Ohio	0.0009562023%
OH509	Elizabeth Township, Miami County, Ohio	0.0000454274%
OH510	Elk Township, Noble County, Ohio	0.0000344955%
OH511	Elk Township, Vinton County, Ohio	0.0002600903%
OH512	Elkrun Township, Ohio	0.0004259682%
OH513	Ellsworth Township, Ohio	0.0001965362%
OH514	Elmore Village, Ohio	0.0016556174%
OH515	Elmwood Place Village, Ohio	0.0045008025%
OH516	Elyria City, Ohio	0.2638149975%
OH517	Elyria Township, Ohio	0.0007693955%
OH518	Empire Village, Ohio	0.0010041070%
OH519	Englewood City, Ohio	0.0628005329%
OH520	Enon Village, Ohio	0.0038378123%
OH521	Erie County, Ohio	0.4532438208%
OH522	Erie Township, Ohio	0.0006045408%
OH523	Euclid City, Ohio	0.0936790366%
OH524	Evendale Village, Ohio	0.0340357530%
OH525	Fairborn City, Ohio	0.1544298717%
OH526	Fairfax Village, Ohio	0.0079411190%
OH527	Fairfield City, Ohio	0.2893759753%
OH528	Fairfield County, Ohio	0.6244843622%
OH529	Fairfield Township, Butler County, Ohio	0.0801075425%
OH530	Fairfield Township, Columbiana County, Ohio	0.0024759402%
OH531	Fairfield Township, Huron County, Ohio	0.0006726173%
OH532	Fairfield Township, Tuscarawas County, Ohio	0.0004138510%
OH533	Fairfield Township, Washington County, Ohio	0.0000501323%
OH534	Fairlawn City, Ohio	0.0675346202%
OH535	Fairport Harbor Village, Ohio	0.0091069372%
OH536	Fairview Park City, Ohio	0.0218966352%
OH537	Fairview Village, Ohio	0.0000924858%

State ID	Qualifying Subdivision	Consolidated State Allocation
OH538	Falls Township, Hocking County, Ohio	0.0002873384%
OH539	Falls Township, Muskingum County, Ohio	0.0022068032%
OH540	Farmer Township, Ohio	0.0002869002%
OH541	Farmersville Village, Ohio	0.0013667928%
OH542	Farmington Township, Ohio	0.0015345154%
OH543	Fayette County, Ohio	0.2554820842%
OH544	Fayette Township, Ohio	0.0013386832%
OH545	Fayette Village, Ohio	0.0012352086%
OH546	Fayetteville Village, Ohio	0.0029455968%
OH547	Fearing Township, Ohio	0.0004177690%
OH548	Felicity Village, Ohio	0.0030684641%
OH549	Findlay City, Ohio	0.1162163280%
OH550	Fitchville Township, Ohio	0.0003431721%
OH551	Flatrock Township, Ohio	0.0001691974%
OH552	Fletcher Village, Ohio	0.0012151836%
OH553	Florence Township, Erie County, Ohio	0.0013194115%
OH554	Florence Township, Williams County, Ohio	0.0002671700%
OH555	Florida Village, Ohio	0.0015566164%
OH556	Flushing Township, Ohio	0.0005905501%
OH557	Flushing Village, Ohio	0.0004640036%
OH558	Forest Park City, Ohio	0.0861415180%
OH559	Forest Village, Ohio	0.0023324226%
OH560	Fort Jennings Village, Ohio	0.0004221969%
OH561	Fort Loramie Village, Ohio	0.0012778446%
OH562	Fort Recovery Village, Ohio	0.0009926059%
OH563	Fostoria City, Ohio	0.0512205361%
OH564	Fowler Township, Ohio	0.0047569976%
OH565	Frankfort Village, Ohio	0.0079678326%
OH566	Franklin City, Ohio	0.0535002847%
OH567	Franklin County, Ohio	5.7883029997%
OH568	Franklin Township, Adams County, Ohio	0.0010014012%
OH569	Franklin Township, Brown County, Ohio	0.0023874837%
OH570	Franklin Township, Clermont County, Ohio	0.0034132353%
OH571	Franklin Township, Columbiana County, Ohio	0.0006123293%
OH572	Franklin Township, Coshocton County, Ohio	0.0002449208%
OH573	Franklin Township, Darke County, Ohio	0.0004797868%
OH574	Franklin Township, Franklin County, Ohio	0.0440874644%

State ID	Qualifying Subdivision	Consolidated State Allocation
OH575	Franklin Township, Fulton County, Ohio	0.0000733787%
OH576	Franklin Township, Jackson County, Ohio	0.0003038871%
OH577	Franklin Township, Mercer County, Ohio	0.0012091744%
OH578	Franklin Township, Portage County, Ohio	0.0001990581%
OH579	Franklin Township, Richland County, Ohio	0.0008563765%
OH580	Franklin Township, Shelby County, Ohio	0.0011802315%
OH581	Franklin Township, Tuscarawas County, Ohio	0.0031235899%
OH582	Franklin Township, Warren County, Ohio	0.0035372089%
OH583	Frazeysburg Village, Ohio	0.0003209896%
OH584	Fredericksburg Village, Ohio	0.0001198464%
OH585	Fredericktown Village, Ohio	0.0055729507%
OH586	Freedom Township, Portage County, Ohio	0.0004265530%
OH587	Freedom Township, Wood County, Ohio	0.0012305895%
OH588	Freeport Township, Ohio	0.0002576440%
OH589	Freeport Village, Ohio	0.0001049661%
OH590	Fremont City, Ohio	0.0724844646%
OH591	Fulton County, Ohio	0.1830065436%
OH592	Fulton Village, Ohio	0.0001234266%
OH593	Fultonham Village, Ohio	0.0000100309%
OH594	Gahanna City, Ohio	0.0724048588%
OH595	Galena Village, Ohio	0.0001402305%
OH596	Galion City, Ohio	0.0440049221%
OH597	Gallia County, Ohio	0.3272280412%
OH598	Gallipolis Village, Ohio	0.0421733929%
OH599	Gambier Village, Ohio	0.0019348227%
OH600	Gann Village, Ohio	0.0000330739%
OH601	Garfield Heights City, Ohio	0.0512449222%
OH602	Garrettsville Village, Ohio	0.0040959299%
OH603	Gasper Township, Ohio	0.0060234621%
OH604	Gates Mills Village, Ohio	0.0065784730%
OH605	Geauga County, Ohio	0.4034987358%
OH606	Geneva City, Ohio	0.0306905423%
OH607	Geneva Township, Ohio	0.0015497902%
OH608	Geneva-On-The-Lake Village, Ohio	0.0052011898%
OH609	Genoa Township, Ohio	0.0490971668%
OH610	Genoa Village, Ohio	0.0023769444%
OH611	Georgetown Village, Ohio	0.0263243336%

State ID	Qualifying Subdivision	Consolidated State Allocation
OH612	German Township, Auglaize County, Ohio	0.0003115915%
OH613	German Township, Clark County, Ohio	0.0120986353%
OH614	German Township, Fulton County, Ohio	0.0012718979%
OH615	German Township, Harrison County, Ohio	0.0002671864%
OH616	German Township, Montgomery County, Ohio	0.0069298793%
OH617	Germantown City, Ohio	0.0166173231%
OH618	Gettysburg Village, Ohio	0.0016993673%
OH619	Gibson Township, Ohio	0.0000992606%
OH620	Gibsonburg Village, Ohio	0.0033999699%
OH621	Gilboa Village, Ohio	0.0001572890%
OH622	Gilead Township, Ohio	0.0002952061%
OH623	Girard City, Ohio	0.0699056997%
OH624	Glandorf Village, Ohio	0.0007698884%
OH625	Glendale Village, Ohio	0.0089682038%
OH626	Glenford Village, Ohio	0.0004004647%
OH627	Glenmont Village, Ohio	0.0000756142%
OH628	Glenwillow Village, Ohio	0.0043105790%
OH629	Gloria Glens Park Village, Ohio	0.0002361762%
OH630	Glouster Village, Ohio	0.0025846274%
OH631	Gnadenhutten Village, Ohio	0.0020889623%
OH632	Golf Manor Village, Ohio	0.0149804075%
OH633	Good Hope Township, Ohio	0.0000544952%
OH634	Gordon Village, Ohio	0.0000369067%
OH635	Gorham Township, Ohio	0.0003913532%
OH636	Goshen Township, Auglaize County, Ohio	0.0000178052%
OH637	Goshen Township, Belmont County, Ohio	0.0007592787%
OH638	Goshen Township, Champaign County, Ohio	0.0009305060%
OH639	Goshen Township, Clermont County, Ohio	0.0551461609%
OH640	Goshen Township, Hardin County, Ohio	0.0002665626%
OH641	Goshen Township, Mahoning County, Ohio	0.0098390939%
OH642	Goshen Township, Tuscarawas County, Ohio	0.0000492680%
OH643	Grafton Township, Ohio	0.0022594905%
OH644	Grafton Village, Ohio	0.0066908189%
OH645	Grand Prairie Township, Ohio	0.0006880499%
OH646	Grand Rapids Township, Ohio	0.0003306061%
OH647	Grand Rapids Village, Ohio	0.0005020315%
OH648	Grand River Village, Ohio	0.0044444886%

State ID	Qualifying Subdivision	Consolidated State Allocation
OH649	Grand Township, Ohio	0.0000371919%
OH650	Grandview Heights City, Ohio	0.0363742583%
OH651	Grandview Township, Ohio	0.0005932320%
OH652	Granger Township, Ohio	0.0028459226%
OH653	Granville Township, Licking County, Ohio	0.0126030583%
OH654	Granville Township, Mercer County, Ohio	0.0015971931%
OH655	Granville Village, Ohio	0.0103882561%
OH656	Gratiot Village, Ohio	0.0002067581%
OH657	Gratis Village, Ohio	0.0064162966%
OH658	Graysville Village, Ohio	0.0000309746%
OH659	Green Camp Township, Ohio	0.0011901403%
OH660	Green Camp Village, Ohio	0.0002045554%
OH661	Green City, Ohio	0.0847580205%
OH662	Green Creek Township, Ohio	0.0006872280%
OH663	Green Springs Village, Ohio	0.0016423298%
OH664	Green Township, Adams County, Ohio	0.0000263527%
OH665	Green Township, Brown County, Ohio	0.0034727036%
OH666	Green Township, Clark County, Ohio	0.0007485095%
OH667	Green Township, Clinton County, Ohio	0.0001561262%
OH668	Green Township, Fayette County, Ohio	0.0001235787%
OH669	Green Township, Gallia County, Ohio	0.0009184428%
OH670	Green Township, Hamilton County, Ohio	0.0953852812%
OH671	Green Township, Harrison County, Ohio	0.0005725423%
OH672	Green Township, Hocking County, Ohio	0.0033142996%
OH673	Green Township, Mahoning County, Ohio	0.0033902496%
OH674	Green Township, Monroe County, Ohio	0.0000062341%
OH675	Green Township, Ross County, Ohio	0.0105357346%
OH676	Green Township, Scioto County, Ohio	0.0218077775%
OH677	Green Township, Shelby County, Ohio	0.0000621174%
OH678	Greene County, Ohio	0.9063855073%
OH679	Greene Township, Ohio	0.0000341003%
OH680	Greenfield Township, Fairfield County, Ohio	0.0084982150%

State ID	Qualifying Subdivision	Consolidated State Allocation
OH681	Greenfield Township, Huron County, Ohio	0.0011256045%
OH682	Greenfield Village, Ohio	0.0148836578%
OH683	Greenhills Village, Ohio	0.0082250286%
OH684	Greensburg Township, Ohio	0.0001324539%
OH685	Greenville City, Ohio	0.0550893674%
OH686	Greenville Township, Ohio	0.0140737464%
OH687	Greenwich Village, Ohio	0.0017844949%
OH688	Groton Township, Ohio	0.0005921768%
OH689	Grove City, Ohio	0.0733060057%
OH690	Groveport City, Ohio	0.0125549613%
OH691	Grover Hill Village, Ohio	0.0001863854%
OH692	Guernsey County, Ohio	0.2910222727%
OH693	Guilford Township, Ohio	0.0060579183%
OH694	Gustavus Township, Ohio	0.0000511505%
OH695	Guyan Township, Ohio	0.0003561309%
OH696	Hambden Township, Ohio	0.0039432026%
OH697	Hamden Village, Ohio	0.0009493296%
OH698	Hamer Township, Ohio	0.0000451704%
OH699	Hamersville Village, Ohio	0.0007131445%
OH700	Hamilton City, Ohio	0.6764224012%
OH701	Hamilton County, Ohio	5.8561869769%
OH702	Hamilton Township, Franklin County, Ohio	0.0255910434%
OH703	Hamilton Township, Jackson County, Ohio	0.0005248960%
OH704	Hamilton Township, Lawrence County, Ohio	0.0009909733%
OH705	Hamilton Township, Warren County, Ohio	0.0450761424%
OH706	Hamler Village, Ohio	0.0004060738%
OH707	Hancock County, Ohio	0.2855617267%
OH708	Hanging Rock Village, Ohio	0.0019993320%
OH709	Hanover Township, Butler County, Ohio	0.0098235954%
OH710	Hanover Township, Columbiana County, Ohio	0.0013178391%
OH711	Hanover Township, Licking County, Ohio	0.0043184009%
OH712	Hanover Village, Ohio	0.0008062251%
OH713	Hanoverton Village, Ohio	0.0010440744%
OH714	Harbor View Village, Ohio	0.0001526700%
OH715	Hardin County, Ohio	0.2235793641%
OH716	Harding Township, Ohio	0.0000272955%
OH717	Hardy Township, Ohio	0.0013901375%
OH718	Harlan Township, Ohio	0.0030485156%
OH719	Harlem Township, Ohio	0.0049245646%
OH720	Harmony Township, Clark County, Ohio	0.0018916876%

State ID	Qualifying Subdivision	Consolidated State Allocation
OH721	Harmony Township, Morrow County, Ohio	0.0001180824%
OH722	Harpersfield Township, Ohio	0.0005048559%
OH723	Harpster Village, Ohio	0.0000822938%
OH724	Harris Township, Ohio	0.0004190567%
OH725	Harrisburg Village, Ohio	0.0002978367%
OH726	Harrison City, Ohio	0.0560804997%
OH727	Harrison County, Ohio	0.0770641930%
OH728	Harrison Township, Champaign County, Ohio	0.0001374611%
OH729	Harrison Township, Gallia County, Ohio	0.0002811560%
OH730	Harrison Township, Hamilton County, Ohio	0.0022712769%
OH731	Harrison Township, Henry County, Ohio	0.0000203037%
OH732	Harrison Township, Knox County, Ohio	0.0000165369%
OH733	Harrison Township, Licking County, Ohio	0.0003058095%
OH734	Harrison Township, Vinton County, Ohio	0.0000199508%
OH735	Harrison Township, Montgomery County, Ohio	0.0328749640%
OH736	Harrison Township, Muskingum County, Ohio	0.0004112679%
OH737	Harrison Township, Paulding County, Ohio	0.0000657831%
OH738	Harrison Township, Perry County, Ohio	0.0020762554%
OH739	Harrison Township, Pickaway County, Ohio	0.0068306454%
OH740	Harrison Township, Preble County, Ohio	0.0015877060%
OH741	Harrison Township, Scioto County, Ohio	0.0071650064%
OH742	Harrison Township, Van Wert County, Ohio	0.0001858511%
OH743	Harrison Township, Vinton County, Ohio	0.0005201806%
OH744	Harrisville Township, Ohio	0.0067192115%
OH745	Harrisville Village, Ohio	0.0000619645%
OH746	Harrod Village, Ohio	0.0000673593%
OH747	Harrison Township, Vinton County, Ohio	0.0007413564%
OH748	Hartford Township, Trumbull County, Ohio	0.0014833648%
OH749	Hartford Village, Ohio	0.0002502078%
OH750	Hartland Township, Ohio	0.0000960882%

State ID	Qualifying Subdivision	Consolidated State Allocation
OH751	Hartsgrove Township, Ohio	0.0005870417%
OH752	Hartville Village, Ohio	0.0099058031%
OH753	Harveysburg Village, Ohio	0.0012100978%
OH754	Haskins Village, Ohio	0.0008938610%
OH755	Haviland Village, Ohio	0.0000511646%
OH756	Hayesville Village, Ohio	0.0000894727%
OH757	Heath City, Ohio	0.0429986695%
OH758	Hebron Village, Ohio	0.0150402674%
OH759	Helena Village, Ohio	0.0000542548%
OH760	Hemlock Village, Ohio	0.0003549573%
OH761	Henrietta Township, Ohio	0.0004674808%
OH762	Henry County, Ohio	0.1089766836%
OH763	Hicksville Township, Ohio	0.0002096578%
OH764	Hicksville Village, Ohio	0.0077242363%
OH765	Higginsport Village, Ohio	0.0015866304%
OH766	Highland County, Ohio	0.3882850462%
OH767	Highland Heights City, Ohio	0.0224853394%
OH768	Highland Hills Village, Ohio	0.0015764629%
OH769	Highland Township, Defiance County, Ohio	0.0027365866%
OH770	Highland Township, Muskingum County, Ohio	0.0001705257%
OH771	Highland Village, Ohio	0.0000677557%
OH772	Hilliard City, Ohio	0.0500136505%
OH773	Hills and Dales Village, Ohio	0.0006069453%
OH774	Hillsboro City, Ohio	0.0707143136%
OH775	Hinckley Township, Ohio	0.0165323306%
OH776	Hiram Township, Ohio	0.0008287315%
OH777	Hiram Village, Ohio	0.0032539898%
OH778	Hocking County, Ohio	0.2559590488%
OH779	Holgate Village, Ohio	0.0002774838%
OH780	Holiday City Village, Ohio	0.0000613051%
OH781	Holland Village, Ohio	0.0097536077%
OH782	Hollansburg Village, Ohio	0.0003567645%
OH783	Holloway Village, Ohio	0.0002671536%
OH784	Holmes County, Ohio	0.1337033098%
OH785	Holmes Township, Ohio	0.0003480370%
OH786	Holmesville Village, Ohio	0.0000436236%
OH787	Homer Township, Medina County, Ohio	0.0010864103%
OH788	Homer Township, Morgan County, Ohio	0.0001820827%
OH789	Hopedale Village, Ohio	0.0002767288%
OH790	Hopewell Township, Licking County, Ohio	0.0002502078%
OH791	Hopewell Township, Muskingum County, Ohio	0.0007422883%
OH792	Hopewell Township, Perry County, Ohio	0.0012909360%

State ID	Qualifying Subdivision	Consolidated State Allocation
OH793	Hopewell Township, Seneca County, Ohio	0.0001303525%
OH794	Howard Township, Ohio	0.0000496108%
OH795	Howland Township, Ohio	0.0502639031%
OH796	Hoytville Village, Ohio	0.0002378935%
OH797	Hubbard City, Ohio	0.0289341396%
OH798	Hubbard Township, Ohio	0.0153110532%
OH799	Huber Heights City, Ohio	0.1252489167%
OH800	Hudson City, Ohio	0.0660214283%
OH801	Hunting Valley Village, Ohio	0.0076690112%
OH802	Huntington Township, Brown County, Ohio	0.0072244638%
OH803	Huntington Township, Ross County, Ohio	0.0066106570%
OH804	Huntsburg Township, Ohio	0.0006508198%
OH805	Huntsville Village, Ohio	0.0008479077%
OH806	Huron City, Ohio	0.0302737409%
OH807	Huron County, Ohio	0.3638859630%
OH808	Huron Township, Ohio	0.0007791800%
OH809	Independence City, Ohio	0.0311578609%
OH810	Independence Township, Ohio	0.0000751984%
OH811	Irondale Village, Ohio	0.0001593821%
OH812	Ironton City, Ohio	0.0888572696%
OH813	Island Creek Township, Ohio	0.0026616805%
OH814	Israel Township, Ohio	0.0004746750%
OH815	Ithaca Village, Ohio	0.0003813690%
OH816	Jackson Center Village, Ohio	0.0015263144%
OH817	Jackson City, Ohio	0.0556665988%
OH818	Jackson County, Ohio	0.4838159524%
OH819	Jackson Township, Allen County, Ohio	0.0004227108%
OH820	Jackson Township, Ashland County, Ohio	0.0000162678%
OH821	Jackson Township, Auglaize County, Ohio	0.0003115915%
OH822	Jackson Township, Brown County, Ohio	0.0004961005%
OH823	Jackson Township, Clermont County, Ohio	0.0014652778%
OH824	Jackson Township, Coshocton County, Ohio	0.0005510719%
OH825	Jackson Township, Crawford County, Ohio	0.0000108762%
OH826	Jackson Township, Franklin County, Ohio	0.0661350150%
OH827	Jackson Township, Guernsey County, Ohio	0.0010334405%
OH828	Jackson Township, Hardin County, Ohio	0.0015327348%

State ID	Qualifying Subdivision	Consolidated State Allocation
OH829	Jackson Township, Highland County, Ohio	0.0000451704%
OH830	Jackson Township, Jackson County, Ohio	0.0001105044%
OH831	Jackson Township, Mahoning County, Ohio	0.0058960862%
OH832	Jackson Township, Monroe County, Ohio	0.0000561065%
OH833	Jackson Township, Montgomery County, Ohio	0.0086323757%
OH834	Jackson Township, Muskingum County, Ohio	0.0011435253%
OH835	Jackson Township, Noble County, Ohio	0.0001207342%
OH836	Jackson Township, Monroe County, Ohio	0.0001534939%
OH837	Jackson Township, Pickaway County, Ohio	0.0001894702%
OH838	Jackson Township, Pike County, Ohio	0.0004309715%
OH839	Jackson Township, Richland County, Ohio	0.0004638706%
OH840	Jackson Township, Sandusky County, Ohio	0.0004340387%
OH841	Jackson Township, Seneca County, Ohio	0.0004311659%
OH842	Jackson Township, Shelby County, Ohio	0.0013665838%
OH843	Jackson Township, Stark County, Ohio	0.1371869620%
OH844	Jackson Township, Union County, Ohio	0.0001416902%
OH845	Jackson Township, Vinton County, Ohio	0.0000910316%
OH846	Jackson Township, Wood County, Ohio	0.0001346914%
OH847	Jackson Township, Wyandot County, Ohio	0.0001214367%
OH848	Jacksonburg Village, Ohio	0.0002870780%
OH849	Jacksonville Village, Ohio	0.0008441727%
OH850	Jamestown Village, Ohio	0.0034877253%
OH851	Jefferson County, Ohio	0.6622324840%
OH852	Jefferson Township, Adams County, Ohio	0.0007642272%
OH853	Jefferson Township, Brown County, Ohio	0.0006821382%
OH854	Jefferson Township, Clinton County, Ohio	0.0014720474%

State ID	Qualifying Subdivision	Consolidated State Allocation
OH855	Jefferson Township, Coshocton County, Ohio	0.0000612302%
OH856	Jefferson Township, Crawford County, Ohio	0.0004567985%
OH857	Jefferson Township, Fayette County, Ohio	0.0005898074%
OH858	Jefferson Township, Franklin County, Ohio	0.0261561693%
OH859	Jefferson Township, Greene County, Ohio	0.0000619123%
OH860	Jefferson Township, Guernsey County, Ohio	0.0000679895%
OH861	Jefferson Township, Jackson County, Ohio	0.0000828783%
OH862	Jefferson Township, Knox County, Ohio	0.0006284039%
OH863	Jefferson Township, Logan County, Ohio	0.0002493846%
OH864	Jefferson Township, Madison County, Ohio	0.0262668976%
OH865	Jefferson Township, Montgomery County, Ohio	0.0133322246%
OH866	Jefferson Township, Muskingum County, Ohio	0.0005015462%
OH867	Jefferson Township, Noble County, Ohio	0.0000172477%
OH868	Jefferson Township, Preble County, Ohio	0.0008020371%
OH869	Jefferson Township, Richland County, Ohio	0.0017662765%
OH870	Jefferson Township, Ross County, Ohio	0.0009148677%
OH871	Jefferson Township, Scioto County, Ohio	0.0036109358%
OH872	Jefferson Township, Tuscarawas County, Ohio	0.0008079949%
OH873	Jefferson Township, Williams County, Ohio	0.0002200224%
OH874	Jefferson Village, Ohio	0.0039566613%
OH875	Jeffersonville Village, Ohio	0.0000112344%
OH876	Jenera Village, Ohio	0.0001194701%
OH877	Jennings Township, Ohio	0.0002731862%
OH878	Jerome Township, Ohio	0.0044044550%
OH879	Jeromesville Village, Ohio	0.0003085668%
OH880	Jerry City Village, Ohio	0.0003417298%
OH881	Jersey Township, Ohio	0.0017699883%
OH882	Jerusalem Township, Ohio	0.0021563480%
OH883	Jerusalem Village, Ohio	0.0000311703%
OH884	Jewett Village, Ohio	0.0001813051%

State ID	Qualifying Subdivision	Consolidated State Allocation
OH885	Johnson Township, Ohio	0.0002326265%
OH886	Johnston Township, Ohio	0.0002216522%
OH887	Johnstown Village, Ohio	0.0092206199%
OH888	Junction City Village, Ohio	0.0017212480%
OH889	Kalida Village, Ohio	0.0022682733%
OH890	Kelleys Island Village, Ohio	0.0028777715%
OH891	Kent City, Ohio	0.0513285414%
OH892	Kenton City, Ohio	0.0306658035%
OH893	Kettering City, Ohio	0.3384195127%
OH894	Kettlersville Village, Ohio	0.0000266218%
OH895	Killbuck Township, Ohio	0.0002093931%
OH896	Killbuck Village, Ohio	0.0010702314%
OH897	Kingston Township, Ohio	0.0000164977%
OH898	Kingston Village, Ohio	0.0076824625%
OH899	Kingsville Township, Ohio	0.0011036385%
OH900	Kinsman Township, Ohio	0.0020801208%
OH901	Kipton Village, Ohio	0.0000973918%
OH902	Kirby Village, Ohio	0.0000472254%
OH903	Kirkersville Village, Ohio	0.0005560173%
OH904	Kirkwood Township, Ohio	0.0000140607%
OH905	Kirtland City, Ohio	0.0223930205%
OH906	Kirtland Hills Village, Ohio	0.0096850050%
OH907	Knox County, Ohio	0.3115395206%
OH908	Knox Township, Columbiana County, Ohio	0.0005191487%
OH909	Knox Township, Guernsey County, Ohio	0.0002039685%
OH910	Knox Township, Jefferson County, Ohio	0.0010041070%
OH911	Knox Township, Vinton County, Ohio	0.0001170406%
OH912	La Grange Township, Ohio	0.0042170664%
OH913	La Rue Village, Ohio	0.0006694539%
OH914	Lafayette Township, Ohio	0.0073805047%
OH915	Lafayette Village, Ohio	0.0000886329%
OH916	Lagrange Village, Ohio	0.0054247251%
OH917	Lake County, Ohio	1.2794251773%
OH918	Lake Township, Stark County, Ohio	0.0367336076%
OH919	Lake Township, Wood County, Ohio	0.0141058613%
OH920	Lakeline Village, Ohio	0.0000947652%
OH921	Lakemore Village, Ohio	0.0083562888%
OH922	Lakeview Village, Ohio	0.0008279569%
OH923	Lakewood City, Ohio	0.1008106545%
OH924	Lancaster City, Ohio	0.1565040398%
OH925	Latty Township, Ohio	0.0000877108%
OH926	Latty Village, Ohio	0.0000219277%
OH927	Laura Village, Ohio	0.0001135686%

State ID	Qualifying Subdivision	Consolidated State Allocation
OH928	Laurel Township, Ohio	0.0001089904%
OH929	Laurelville Village, Ohio	0.0007183460%
OH930	Lawrence County, Ohio	0.5322395718%
OH931	Lawrence Township, Lawrence County, Ohio	0.0093186258%
OH932	Lawrence Township, Stark County, Ohio	0.0140521883%
OH933	Lawrence Township, Tuscarawas County, Ohio	0.0052322595%
OH934	Lawrence Township, Washington County, Ohio	0.0000334215%
OH935	Lebanon City, Ohio	0.0873597515%
OH936	Lebanon Township, Ohio	0.0004736376%
OH937	Lee Township, Athens County, Ohio	0.0005836255%
OH938	Lee Township, Carroll County, Ohio	0.0000980404%
OH939	Lee Township, Monroe County, Ohio	0.0000872768%
OH940	Leesburg Township, Ohio	0.0001989692%
OH941	Leesburg Village, Ohio	0.0054882077%
OH942	Leesville Village, Ohio	0.0000217868%
OH943	Leetonia Village, Ohio	0.0074544436%
OH944	Leipsic Village, Ohio	0.0030629968%
OH945	Lemon Township, Ohio	0.0041524079%
OH946	Lenox Township, Ohio	0.0002582984%
OH947	Leroy Township, Ohio	0.0053731877%
OH948	Letart Township, Ohio	0.0005413001%
OH949	Lewis Township, Ohio	0.0039998104%
OH950	Lewisburg Village, Ohio	0.0132254277%
OH951	Lewisville Village, Ohio	0.0001745536%
OH952	Lexington Township, Ohio	0.0014349065%
OH953	Lexington Village, Ohio	0.0093220146%
OH954	Liberty Center Village, Ohio	0.0002842517%
OH955	Liberty Township, Adams County, Ohio	0.0005534059%
OH956	Liberty Township, Butler County, Ohio	0.1149425287%
OH957	Liberty Township, Clinton County, Ohio	0.0016058699%
OH958	Liberty Township, Crawford County, Ohio	0.0001413900%
OH959	Liberty Township, Darke County, Ohio	0.0010825959%
OH960	Liberty Township, Delaware County, Ohio	0.0646792482%
OH961	Liberty Township, Guernsey County, Ohio	0.0001631748%

State ID	Qualifying Subdivision	Consolidated State Allocation
OH962	Liberty Township, Hancock County, Ohio	0.0013703927%
OH963	Liberty Township, Hardin County, Ohio	0.0010773571%
OH964	Liberty Township, Henry County, Ohio	0.0006632539%
OH965	Liberty Township, Highland County, Ohio	0.0016487208%
OH966	Liberty Township, Jackson County, Ohio	0.0018785750%
OH967	Liberty Township, Knox County, Ohio	0.0003803498%
OH968	Liberty Township, Licking County, Ohio	0.0000926695%
OH969	Liberty Township, Logan County, Ohio	0.0003591138%
OH970	Liberty Township, Mercer County, Ohio	0.0002526633%
OH971	Liberty Township, Putnam County, Ohio	0.0002235160%
OH972	Liberty Township, Seneca County, Ohio	0.0003409218%
OH973	Liberty Township, Trumbull County, Ohio	0.0688997396%
OH974	Liberty Township, Union County, Ohio	0.0017726349%
OH975	Liberty Township, Wood County, Ohio	0.0002142817%
OH976	Lick Township, Ohio	0.0000552522%
OH977	Licking County, Ohio	0.7119059883%
OH978	Licking Township, Licking County, Ohio	0.0031507646%
OH979	Licking Township, Muskingum County, Ohio	0.0012839582%
OH980	Lima City, Ohio	0.1727455397%
OH981	Limaville Village, Ohio	0.0003869608%
OH982	Lincoln Heights Village, Ohio	0.0083419326%
OH983	Lincoln Township, Ohio	0.0001771237%
OH984	Lindsey Village, Ohio	0.0006510581%
OH985	Linndale Village, Ohio	0.0028091858%
OH986	Lisbon Village, Ohio	0.0009584285%
OH987	Litchfield Township, Ohio	0.0019838797%
OH988	Lithopolis Village, Ohio	0.0014069809%
OH989	Liverpool Township, Columbiana County, Ohio	0.0053112911%
OH990	Liverpool Township, Medina County, Ohio	0.0054202427%
OH991	Lockbourne Village, Ohio	0.0000076368%
OH992	Lockington Village, Ohio	0.0000443696%

State ID	Qualifying Subdivision	Consolidated State Allocation
OH993	Lockland Village, Ohio	0.0146296956%
OH994	Lodi Township, Ohio	0.0003856097%
OH995	Lodi Village, Ohio	0.0068845348%
OH996	Logan City, Ohio	0.0081742815%
OH997	Logan County, Ohio	0.2671308245%
OH998	Logan Township, Ohio	0.0001602471%
OH999	London City, Ohio	0.0432082694%
OH1000	Londonderry Township, Ohio	0.0001223811%
OH1001	Lorain City, Ohio	0.2833225817%
OH1002	Lorain County, Ohio	1.3357776870%
OH1003	Lordstown Village, Ohio	0.0208012082%
OH1004	Lore City Village, Ohio	0.0001903706%
OH1005	Lostcreek Township, Ohio	0.0008063368%
OH1006	Loudon Township, Carroll County, Ohio	0.0003703748%
OH1007	Loudon Township, Seneca County, Ohio	0.0000802169%
OH1008	Loudonville Village, Ohio	0.0063961356%
OH1009	Louisville City, Ohio	0.0170110645%
OH1010	Loveland City, Ohio	0.0476149868%
OH1011	Lowell Village, Ohio	0.0000835538%
OH1012	Lowellville Village, Ohio	0.0039921417%
OH1013	Lower Salem Village, Ohio	0.0000220891%
OH1014	Lucas County, Ohio	3.1972089435%
OH1015	Lucas Village, Ohio	0.0007671706%
OH1016	Luckey Village, Ohio	0.0005693772%
OH1017	Ludlow Falls Village, Ohio	0.0002558525%
OH1018	Ludlow Township, Ohio	0.0000501323%
OH1019	Lykens Township, Ohio	0.0000217523%
OH1020	Lynchburg Village, Ohio	0.0028908592%
OH1021	Lyndhurst City, Ohio	0.0338761729%
OH1022	Lynn Township, Ohio	0.0000111068%
OH1023	Lyons Village, Ohio	0.0001442518%
OH1024	Macedonia City, Ohio	0.0527014847%
OH1025	Macksburg Village, Ohio	0.0000477742%
OH1026	Mad River Township, Champaign County, Ohio	0.0003806616%
OH1027	Mad River Township, Clark County, Ohio	0.0132962505%
OH1028	Madeira City, Ohio	0.0133187012%
OH1029	Madison County, Ohio	0.2562654482%
OH1030	Madison Township, Butler County, Ohio	0.0065436778%
OH1031	Madison Township, Clark County, Ohio	0.0028035083%
OH1032	Madison Township, Columbiana County, Ohio	0.0001863611%
OH1033	Madison Township, Fayette County, Ohio	0.0003651188%

State ID	Qualifying Subdivision	Consolidated State Allocation
OH1034	Madison Township, Franklin County, Ohio	0.0648596631%
OH1035	Madison Township, Guernsey County, Ohio	0.0001087832%
OH1036	Madison Township, Hancock County, Ohio	0.0001546084%
OH1037	Madison Township, Highland County, Ohio	0.0000451704%
OH1038	Madison Township, Lake County, Ohio	0.0185550292%
OH1039	Madison Township, Licking County, Ohio	0.0016124501%
OH1040	Madison Township, Muskingum County, Ohio	0.0000200618%
OH1041	Madison Township, Pickaway County, Ohio	0.0005781272%
OH1042	Madison Township, Richland County, Ohio	0.0162443911%
OH1043	Madison Township, Sandusky County, Ohio	0.0010398844%
OH1044	Madison Township, Scioto County, Ohio	0.0090415557%
OH1045	Madison Township, Williams County, Ohio	0.0001650168%
OH1046	Madison Village, Ohio	0.0069557668%
OH1047	Magnetic Springs Village, Ohio	0.0003286007%
OH1048	Magnolia Village, Ohio	0.0039121470%
OH1049	Mahoning County, Ohio	1.6000258367%
OH1050	Maineville Village, Ohio	0.0020362222%
OH1051	Malaga Township, Ohio	0.0000561065%
OH1052	Malinta Village, Ohio	0.0000609111%
OH1053	Malta Village, Ohio	0.0001392397%
OH1054	Malvern Village, Ohio	0.0005882424%
OH1055	Manchester Township, Ohio	0.0013966912%
OH1056	Manchester Village, Ohio	0.0025562084%
OH1057	Mansfield City, Ohio	0.2140405926%
OH1058	Mantua Township, Ohio	0.0000649985%
OH1059	Mantua Village, Ohio	0.0015884020%
OH1060	Maple Heights City, Ohio	0.0395380059%
OH1061	Marble Cliff Village, Ohio	0.0004658471%
OH1062	Marblehead Village, Ohio	0.0019235388%
OH1063	Marengo Village, Ohio	0.0002597814%
OH1064	Margaretta Township, Ohio	0.0078229674%
OH1065	Mariemont Village, Ohio	0.0153812210%
OH1066	Marietta City, Ohio	0.0852917164%
OH1067	Marietta Township, Ohio	0.0002088845%
OH1068	Marion City, Ohio	0.2496505326%
OH1069	Marion County, Ohio	0.3374233828%

State ID	Qualifying Subdivision	Consolidated State Allocation
OH1070	Marion Township, Allen County, Ohio	0.0001840837%
OH1071	Marion Township, Clinton County, Ohio	0.0020965523%
OH1072	Marion Township, Fayette County, Ohio	0.0007695582%
OH1073	Marion Township, Hardin County, Ohio	0.0006108726%
OH1074	Marion Township, Henry County, Ohio	0.0000947506%
OH1075	Marion Township, Hocking County, Ohio	0.0001634856%
OH1076	Marion Township, Marion County, Ohio	0.0526451142%
OH1077	Marion Township, Mercer County, Ohio	0.0015069562%
OH1078	Marion Township, Pike County, Ohio	0.0001943597%
OH1079	Mark Township, Ohio	0.0001324155%
OH1080	Marlboro Township, Delaware County, Ohio	0.0001979724%
OH1081	Marlboro Township, Stark County, Ohio	0.0048193068%
OH1082	Marseilles Township, Ohio	0.0000067465%
OH1083	Marseilles Village, Ohio	0.0000067465%
OH1084	Marshall Township, Ohio	0.0006323861%
OH1085	Marshallville Village, Ohio	0.0004600557%
OH1086	Martins Ferry City, Ohio	0.0347299689%
OH1087	Martinsburg Village, Ohio	0.0000165369%
OH1088	Martinsville Village, Ohio	0.0006022012%
OH1089	Mary Ann Township, Ohio	0.0009452294%
OH1090	Marysville City, Ohio	0.0386422342%
OH1091	Mason City, Ohio	0.1510527828%
OH1092	Mason Township, Ohio	0.0000347710%
OH1093	Massie Township, Ohio	0.0001279911%
OH1094	Massillon City, Ohio	0.1194930798%
OH1095	Matamoras Village, Ohio	0.0003175044%
OH1096	Maumee City, Ohio	0.0830057490%
OH1097	Mayfield Heights City, Ohio	0.0460098010%
OH1098	Mayfield Village, Ohio	0.0222206201%
OH1099	McArthur Village, Ohio	0.0034201873%
OH1100	McClure Village, Ohio	0.0000744469%
OH1101	McComb Village, Ohio	0.0019536880%
OH1102	McConnelsville Village, Ohio	0.0038344466%
OH1103	McDonald Township, Ohio	0.0004331642%
OH1104	McDonald Village, Ohio	0.0085762358%
OH1105	McGuffey Village, Ohio	0.0000111068%
OH1106	McKean Township, Ohio	0.0016773188%
OH1107	McLean Township, Ohio	0.0000088739%

State ID	Qualifying Subdivision	Consolidated State Allocation
OH1108	Mead Township, Ohio	0.0016310431%
OH1109	Mecca Township, Ohio	0.0015686157%
OH1110	Mechanicsburg Village, Ohio	0.0059742716%
OH1111	Medina City, Ohio	0.0850942672%
OH1112	Medina County, Ohio	0.7825696764%
OH1113	Medina Township, Ohio	0.0180792844%
OH1114	Meigs County, Ohio	0.1986571471%
OH1115	Meigs Township, Ohio	0.0019764498%
OH1116	Meigsville Township, Ohio	0.0000749752%
OH1117	Melrose Village, Ohio	0.0001123652%
OH1118	Mendon Village, Ohio	0.0000902369%
OH1119	Mentor City, Ohio	0.2495262895%
OH1120	Mentor-On-The-Lake City, Ohio	0.0195974466%
OH1121	Mercer County, Ohio	0.1655486085%
OH1122	Mesopotamia Township, Ohio	0.0029496795%
OH1123	Metamora Village, Ohio	0.0001589872%
OH1124	Meyers Lake Village, Ohio	0.0015027860%
OH1125	Miami County, Ohio	0.5778482109%
OH1126	Miami Township, Clermont County, Ohio	0.2187745945%
OH1127	Miami Township, Greene County, Ohio	0.0056649739%
OH1128	Miami Township, Hamilton County, Ohio	0.0222368033%
OH1129	Miami Township, Logan County, Ohio	0.0002394092%
OH1130	Miami Township, Montgomery County, Ohio	0.1354683508%
OH1131	Miamisburg City, Ohio	0.1660413479%
OH1132	Middle Point Village, Ohio	0.0010159860%
OH1133	Middleburg Heights City, Ohio	0.0377244809%
OH1134	Middlebury Township, Ohio	0.0002811281%
OH1135	Middlefield Village, Ohio	0.0110639374%
OH1136	Middleport Village, Ohio	0.0066985891%
OH1137	Middleton Township, Columbiana County, Ohio	0.0013311506%
OH1138	Middleton Township, Wood County, Ohio	0.0032264709%
OH1139	Middletown City, Ohio	0.5826547123%
OH1140	Midland Village, Ohio	0.0000223037%
OH1141	Midvale Village, Ohio	0.0004926798%
OH1142	Midway Village, Ohio	0.0006778443%
OH1143	Mifflin Township, Ashland County, Ohio	0.0003416231%
OH1144	Mifflin Township, Franklin County, Ohio	0.0915733216%
OH1145	Mifflin Township, Pike County, Ohio	0.0001267563%

State ID	Qualifying Subdivision	Consolidated State Allocation
OH1146	Mifflin Township, Richland County, Ohio	0.0080552911%
OH1147	Mifflin Township, Wyandot County, Ohio	0.0001214367%
OH1148	Mifflin Village, Ohio	0.0001545438%
OH1149	Milan Township, Ohio	0.0020258680%
OH1150	Milan Village, Ohio	0.0040820332%
OH1151	Milford Center Village, Ohio	0.0000633084%
OH1152	Milford City, Ohio	0.0751522099%
OH1153	Milford Township, Butler County, Ohio	0.0015672512%
OH1154	Milford Township, Defiance County, Ohio	0.0002979348%
OH1155	Mill Creek Township, Coshocton County, Ohio	0.0000229613%
OH1156	Mill Creek Township, Williams County, Ohio	0.0000628635%
OH1157	Mill Township, Ohio	0.0121593375%
OH1158	Millbury Village, Ohio	0.0009905091%
OH1159	Millcreek Township, Ohio	0.0000180881%
OH1160	Milledgeville Village, Ohio	0.0000257235%
OH1161	Miller City Village, Ohio	0.0000248351%
OH1162	Miller Township, Ohio	0.0008599212%
OH1163	Millersburg Village, Ohio	0.0018263731%
OH1164	Millersport Village, Ohio	0.0058664571%
OH1165	Millville Village, Ohio	0.0076100550%
OH1166	Millwood Township, Ohio	0.0000543916%
OH1167	Milton Center Village, Ohio	0.0000061223%
OH1168	Milton Township, Ashland County, Ohio	0.0000162678%
OH1169	Milton Township, Mahoning County, Ohio	0.0048642711%
OH1170	Miltonsburg Village, Ohio	0.0000172975%
OH1171	Mineral City Village, Ohio	0.0026506173%
OH1172	Minerva Park Village, Ohio	0.0030776456%
OH1173	Minerva Village, Ohio	0.0118214870%
OH1174	Mingo Junction Village, Ohio	0.0074909571%
OH1175	Minster Village, Ohio	0.0056442578%
OH1176	Mississinawa Township, Ohio	0.0003444623%
OH1177	Mogadore Village, Ohio	0.0107618198%
OH1178	Monclova Township, Ohio	0.0108181339%
OH1179	Monday Creek Township, Ohio	0.0000430312%
OH1180	Monroe City, Ohio	0.1198391105%
OH1181	Monroe County, Ohio	0.0768222745%
OH1182	Monroe Township, Adams County, Ohio	0.0016865705%
OH1183	Monroe Township, Allen County, Ohio	0.0002727166%

State ID	Qualifying Subdivision	Consolidated State Allocation
OH1184	Monroe Township, Carroll County, Ohio	0.0010130841%
OH1185	Monroe Township, Clermont County, Ohio	0.0034821896%
OH1186	Monroe Township, Darke County, Ohio	0.0006151113%
OH1187	Monroe Township, Guernsey County, Ohio	0.0001903706%
OH1188	Monroe Township, Harrison County, Ohio	0.0003530677%
OH1189	Monroe Township, Knox County, Ohio	0.0021828768%
OH1190	Monroe Township, Licking County, Ohio	0.0160503654%
OH1191	Monroe Township, Logan County, Ohio	0.0001895323%
OH1192	Monroe Township, Muskingum County, Ohio	0.0001203711%
OH1193	Monroe Township, Perry County, Ohio	0.0000753046%
OH1194	Monroe Township, Pickaway County, Ohio	0.0003740823%
OH1195	Monroe Township, Preble County, Ohio	0.0020296448%
OH1196	Monroe Township, Putnam County, Ohio	0.0007698884%
OH1197	Monroe Township, Richland County, Ohio	0.0011596765%
OH1198	Monroeville Village, Ohio	0.0057515643%
OH1199	Monterey Township, Ohio	0.0001158972%
OH1200	Montezuma Village, Ohio	0.0003248528%
OH1201	Montgomery City, Ohio	0.0491831661%
OH1202	Montgomery County, Ohio	5.1644746001%
OH1203	Montgomery Township, Marion County, Ohio	0.0007252418%
OH1204	Montgomery Township, Wood County, Ohio	0.0011448768%
OH1205	Montpelier Village, Ohio	0.0054141221%
OH1206	Montville Township, Geauga County, Ohio	0.0005742528%
OH1207	Montville Township, Medina County, Ohio	0.0202875314%
OH1208	Moorefield Township, Ohio	0.0090773788%
OH1209	Moraine City, Ohio	0.0890573422%
OH1210	Moreland Hills Village, Ohio	0.0034611065%
OH1211	Morgan County, Ohio	0.0873568346%
OH1212	Morgan Township, Ashtabula County, Ohio	0.0013032327%

State ID	Qualifying Subdivision	Consolidated State Allocation
OH1213	Morgan Township, Butler County, Ohio	0.0060266465%
OH1214	Morgan Township, Gallia County, Ohio	0.0004498495%
OH1215	Morgan Township, Knox County, Ohio	0.0013394926%
OH1216	Morgan Township, Scioto County, Ohio	0.0014216283%
OH1217	Morral Village, Ohio	0.0008926053%
OH1218	Morris Township, Ohio	0.0000330739%
OH1219	Morristown Village, Ohio	0.0004780643%
OH1220	Morrow County, Ohio	0.2192732037%
OH1221	Morrow Village, Ohio	0.0015475289%
OH1222	Moscow Village, Ohio	0.0010343137%
OH1223	Moulton Township, Ohio	0.0002403706%
OH1224	Mount Blanchard Village, Ohio	0.0000632489%
OH1225	Mount Cory Village, Ohio	0.0001194701%
OH1226	Mount Eaton Village, Ohio	0.0003286112%
OH1227	Mount Gilead Village, Ohio	0.0047705309%
OH1228	Mount Healthy City, Ohio	0.0150472097%
OH1229	Mount Orab Village, Ohio	0.0858253892%
OH1230	Mount Pleasant Township, Ohio	0.0009562924%
OH1231	Mount Pleasant Village, Ohio	0.0001593821%
OH1232	Mount Sterling Village, Ohio	0.0092167280%
OH1233	Mount Vernon City, Ohio	0.0916146794%
OH1234	Mount Victory Village, Ohio	0.0003726928%
OH1235	Mowrystown Village, Ohio	0.0099826658%
OH1236	Munroe Falls City, Ohio	0.0144765234%
OH1237	Munson Township, Ohio	0.0126431327%
OH1238	Murray City Village, Ohio	0.0003666041%
OH1239	Muskingum County, Ohio	0.5186890264%
OH1240	Muskingum Township, Ohio	0.0034591272%
OH1241	Mutual Village, Ohio	0.0000512624%
OH1242	Napoleon City, Ohio	0.0200262083%
OH1243	Napoleon Township, Ohio	0.0008595230%
OH1244	Nashville Village, Ohio	0.0001163295%
OH1245	Navarre Village, Ohio	0.0045125337%
OH1246	Nellie Village, Ohio	0.0000766034%
OH1247	Nelsonville City, Ohio	0.0153618582%
OH1248	Nevada Village, Ohio	0.0000539719%
OH1249	Neville Village, Ohio	0.0000172386%
OH1250	New Albany City, Ohio	0.0355984449%
OH1251	New Alexandria Village, Ohio	0.0001593821%
OH1252	New Athens Village, Ohio	0.0001049661%
OH1253	New Bavaria Village, Ohio	0.0001925555%
OH1254	New Bloomington Village, Ohio	0.0006286558%
OH1255	New Boston Village, Ohio	0.0217793450%
OH1256	New Bremen Village, Ohio	0.0076829566%
OH1257	New Carlisle City, Ohio	0.0121258538%

State ID	Qualifying Subdivision	Consolidated State Allocation
OH1258	New Concord Village, Ohio	0.0073426360%
OH1259	New Franklin City, Ohio	0.0293867642%
OH1260	New Haven Township, Ohio	0.0016334992%
OH1261	New Holland Village, Ohio	0.0001903085%
OH1262	New Jasper Township, Ohio	0.0016406755%
OH1263	New Knoxville Village, Ohio	0.0011840478%
OH1264	New Lebanon Village, Ohio	0.0058388430%
OH1265	New Lexington Village, Ohio	0.0129954223%
OH1266	New London Township, Ohio	0.0002882646%
OH1267	New London Village, Ohio	0.0030473682%
OH1268	New Madison Village, Ohio	0.0016608005%
OH1269	New Market Township, Ohio	0.0002484374%
OH1270	New Miami Village, Ohio	0.0024074272%
OH1271	New Middletown Village, Ohio	0.0007615778%
OH1272	New Paris Village, Ohio	0.0016204423%
OH1273	New Philadelphia City, Ohio	0.0774788253%
OH1274	New Richmond Village, Ohio	0.0330808011%
OH1275	New Riegel Village, Ohio	0.0002406507%
OH1276	New Russia Township, Ohio	0.0008375698%
OH1277	New Straitsville Village, Ohio	0.0021300444%
OH1278	New Vienna Village, Ohio	0.0009144537%
OH1279	New Washington Village, Ohio	0.0012290055%
OH1280	New Waterford Village, Ohio	0.0048586998%
OH1281	New Weston Village, Ohio	0.0000861156%
OH1282	Newark City, Ohio	0.1777772576%
OH1283	Newark Township, Ohio	0.0018255901%
OH1284	Newberry Township, Ohio	0.0019874499%
OH1285	Newburgh Heights Village, Ohio	0.0042789708%
OH1286	Newbury Township, Ohio	0.0027755552%
OH1287	Newcomerstown Village, Ohio	0.0076759513%
OH1288	Newton Falls Village, Ohio	0.0365044154%
OH1289	Newton Township, Licking County, Ohio	0.0011027676%
OH1290	Newton Township, Muskingum County, Ohio	0.0020262466%
OH1291	Newton Township, Pike County, Ohio	0.0002281614%
OH1292	Newton Township, Trumbull County, Ohio	0.0026939270%
OH1293	Newtonsville Village, Ohio	0.0005516340%
OH1294	Newtown Village, Ohio	0.0057282940%
OH1295	Ney Village, Ohio	0.0000662077%
OH1296	Nile Township, Ohio	0.0052315920%
OH1297	Niles City, Ohio	0.1643806952%
OH1298	Nimishillen Township, Ohio	0.0122610291%
OH1299	Noble County, Ohio	0.0987433126%
OH1300	Noble Township, Auglaize County, Ohio	0.0000089026%

State ID	Qualifying Subdivision	Consolidated State Allocation
OH1301	Noble Township, Defiance County, Ohio	0.0003420733%
OH1302	Noble Township, Noble County, Ohio	0.0008278915%
OH1303	North Baltimore Village, Ohio	0.0034529973%
OH1304	North Bend Village, Ohio	0.0025608089%
OH1305	North Bloomfield Township, Ohio	0.0004132886%
OH1306	North Canton City, Ohio	0.0524878920%
OH1307	North College Hill City, Ohio	0.0194144077%
OH1308	North Fairfield Village, Ohio	0.0000686344%
OH1309	North Hampton Village, Ohio	0.0018236413%
OH1310	North Kingsville Village, Ohio	0.0058586766%
OH1311	North Lewisburg Village, Ohio	0.0040569220%
OH1312	North Olmsted City, Ohio	0.0399884238%
OH1313	North Perry Village, Ohio	0.0021416939%
OH1314	North Randall Village, Ohio	0.0010272691%
OH1315	North Ridgeville City, Ohio	0.1099748579%
OH1316	North Robinson Village, Ohio	0.0000652569%
OH1317	North Royalton City, Ohio	0.0490362937%
OH1318	North Star Village, Ohio	0.0006041028%
OH1319	North Township, Ohio	0.0006202542%
OH1320	Northfield Center Township, Ohio	0.0055419447%
OH1321	Northfield Village, Ohio	0.0204907382%
OH1322	Northwest Township, Ohio	0.0003378915%
OH1323	Northwood City, Ohio	0.0154037964%
OH1324	Norton City, Ohio	0.0374368018%
OH1325	Norwalk City, Ohio	0.0671930963%
OH1326	Norwalk Township, Ohio	0.0009746088%
OH1327	Norwich Township, Franklin County, Ohio	0.0881825657%
OH1328	Norwich Township, Huron County, Ohio	0.0005490754%
OH1329	Norwich Village, Ohio	0.0000776491%
OH1330	Norwood City, Ohio	0.1133550899%
OH1331	Nottingham Township, Ohio	0.0002290169%
OH1332	Oak Harbor Village, Ohio	0.0043210926%
OH1333	Oak Hill Village, Ohio	0.0009945397%
OH1334	Oakwood City, Ohio	0.0665292396%
OH1335	Oakwood Village, Cuyahoga County, Ohio	0.0160412015%
OH1336	Oakwood Village, Paulding County, Ohio	0.0006103209%
OH1337	Oberlin City, Ohio	0.0523286319%
OH1338	Obetz Village, Ohio	0.0012677151%
OH1339	Octa Village, Ohio	0.0000132032%
OH1340	Ohio City Village, Ohio	0.0013381279%
OH1341	Ohio Township, Clermont County, Ohio	0.0024995915%

State ID	Qualifying Subdivision	Consolidated State Allocation
OH1342	Ohio Township, Monroe County, Ohio	0.0002805325%
OH1343	Old Washington Village, Ohio	0.0016589439%
OH1344	Olive Township, Meigs County, Ohio	0.0005413001%
OH1345	Olive Township, Noble County, Ohio	0.0002069729%
OH1346	Olmsted Falls City, Ohio	0.0116318466%
OH1347	Olmsted Township, Ohio	0.0148163807%
OH1348	Ontario City, Ohio	0.0192773910%
OH1349	Orange Township, Ashland County, Ohio	0.0004880329%
OH1350	Orange Township, Carroll County, Ohio	0.0003703748%
OH1351	Orange Township, Delaware County, Ohio	0.0531556020%
OH1352	Orange Township, Meigs County, Ohio	0.0003383126%
OH1353	Orange Township, Shelby County, Ohio	0.0011891054%
OH1354	Orange Village, Ohio	0.0100237754%
OH1355	Orangeville Village, Ohio	0.0005285553%
OH1356	Oregon City, Ohio	0.0936692081%
OH1357	Orrville City, Ohio	0.0089614214%
OH1358	Orwell Township, Ohio	0.0004813742%
OH1359	Orwell Village, Ohio	0.0054712290%
OH1360	Osgood Village, Ohio	0.0000984178%
OH1361	Osnaburg Township, Ohio	0.0017515756%
OH1362	Ostrander Village, Ohio	0.0001237328%
OH1363	Ottawa County, Ohio	0.2393019717%
OH1364	Ottawa Hills Village, Ohio	0.0134021121%
OH1365	Ottawa Village, Ohio	0.0047352274%
OH1366	Ottoville Village, Ohio	0.0010927448%
OH1367	Otway Village, Ohio	0.0001137303%
OH1368	Owensville Village, Ohio	0.0008791667%
OH1369	Oxford City, Ohio	0.0794612533%
OH1370	Oxford Township, Butler County, Ohio	0.1101599888%
OH1371	Oxford Township, Coshocton County, Ohio	0.0002143057%
OH1372	Oxford Township, Guernsey County, Ohio	0.0001223811%
OH1373	Oxford Township, Tuscarawas County, Ohio	0.0000788288%
OH1374	Painesville City, Ohio	0.0828627046%
OH1375	Painesville Township, Ohio	0.0334236916%
OH1376	Paint Township, Fayette County, Ohio	0.0000280861%

State ID	Qualifying Subdivision	Consolidated State Allocation
OH1377	Paint Township, Highland County, Ohio	0.0002710226%
OH1378	Paint Township, Holmes County, Ohio	0.0004187862%
OH1379	Paint Township, Madison County, Ohio	0.0000155425%
OH1380	Paint Township, Ross County, Ohio	0.0003836542%
OH1381	Paint Township, Wayne County, Ohio	0.0001894347%
OH1382	Palestine Village, Ohio	0.0005121741%
OH1383	Palmer Township, Ohio	0.0000584877%
OH1384	Palmyra Township, Ohio	0.0008124819%
OH1385	Pandora Village, Ohio	0.0009188990%
OH1386	Paris Township, Portage County, Ohio	0.0001503091%
OH1387	Paris Township, Stark County, Ohio	0.0010390703%
OH1388	Parkman Township, Ohio	0.0008613792%
OH1389	Parma City, Ohio	0.1543116176%
OH1390	Parma Heights City, Ohio	0.0326118418%
OH1391	Parral Village, Ohio	0.0000098536%
OH1392	Pataskala City, Ohio	0.0174033408%
OH1393	Patterson Village, Ohio	0.0000841761%
OH1394	Paulding County, Ohio	0.0839721160%
OH1395	Paulding Township, Ohio	0.0001534939%
OH1396	Paulding Village, Ohio	0.0016847781%
OH1397	Paxton Township, Ohio	0.0010329152%
OH1398	Payne Village, Ohio	0.0005664655%
OH1399	Pease Township, Ohio	0.0005202465%
OH1400	Pebble Township, Ohio	0.0003464673%
OH1401	Pee Pee Township, Ohio	0.0015041749%
OH1402	Peebles Village, Ohio	0.0067989872%
OH1403	Pemberville Village, Ohio	0.0012856905%
OH1404	Peninsula Village, Ohio	0.0050407601%
OH1405	Penn Township, Ohio	0.0001392397%
OH1406	Pepper Pike City, Ohio	0.0193758750%
OH1407	Perkins Township, Ohio	0.0512077107%
OH1408	Perry County, Ohio	0.2380485965%
OH1409	Perry Township, Allen County, Ohio	0.0045543679%
OH1410	Perry Township, Brown County, Ohio	0.0143559087%
OH1411	Perry Township, Columbiana County, Ohio	0.0048853229%
OH1412	Perry Township, Fayette County, Ohio	0.0003538844%
OH1413	Perry Township, Franklin County, Ohio	0.0091642053%

State ID	Qualifying Subdivision	Consolidated State Allocation
OH1414	Perry Township, Lake County, Ohio	0.0025586608%
OH1415	Perry Township, Lawrence County, Ohio	0.0009214313%
OH1416	Perry Township, Licking County, Ohio	0.0016309840%
OH1417	Perry Township, Logan County, Ohio	0.0026933538%
OH1418	Perry Township, Monroe County, Ohio	0.0000872768%
OH1419	Perry Township, Muskingum County, Ohio	0.0027986277%
OH1420	Perry Township, Pickaway County, Ohio	0.0000291493%
OH1421	Perry Township, Pike County, Ohio	0.0001267563%
OH1422	Perry Township, Putnam County, Ohio	0.0000082784%
OH1423	Perry Township, Richland County, Ohio	0.0004103471%
OH1424	Perry Township, Stark County, Ohio	0.0537347763%
OH1425	Perry Township, Wood County, Ohio	0.0001040797%
OH1426	Perry Village, Ohio	0.0054300469%
OH1427	Perrysburg City, Ohio	0.0576846462%
OH1428	Perrysburg Township, Ohio	0.0342177338%
OH1429	Perrysville Village, Ohio	0.0008459238%
OH1430	Peru Township, Huron County, Ohio	0.0000274538%
OH1431	Peru Township, Morrow County, Ohio	0.0000708495%
OH1432	Phillipsburg Village, Ohio	0.0041962937%
OH1433	Philo Village, Ohio	0.0010532470%
OH1434	Pickaway County, Ohio	0.0934088328%
OH1435	Pickaway Township, Ohio	0.0005441197%
OH1436	Pickerington City, Ohio	0.0350194279%
OH1437	Pierce Township, Ohio	0.0721778605%
OH1438	Pierpont Township, Ohio	0.0011858243%
OH1439	Pike County, Ohio	0.3072066041%
OH1440	Pike Township, Brown County, Ohio	0.0024184900%
OH1441	Pike Township, Clark County, Ohio	0.0026810249%
OH1442	Pike Township, Perry County, Ohio	0.0022268646%
OH1443	Pike Township, Stark County, Ohio	0.0021276201%
OH1444	Piketon Village, Ohio	0.0023999196%

State ID	Qualifying Subdivision	Consolidated State Allocation
OH1445	Pioneer Village, Ohio	0.0028760068%
OH1446	Piqua City, Ohio	0.0869480927%
OH1447	Pitsburg Village, Ohio	0.0005659024%
OH1448	Pitt Township, Ohio	0.0002833522%
OH1449	Plain City Village, Ohio	0.0102501421%
OH1450	Plain Township, Franklin County, Ohio	0.0388485937%
OH1451	Plain Township, Stark County, Ohio	0.0464019090%
OH1452	Plain Township, Wayne County, Ohio	0.0002976831%
OH1453	Plain Township, Wood County, Ohio	0.0002693828%
OH1454	Plainfield Village, Ohio	0.0000153076%
OH1455	Pleasant City Village, Ohio	0.0008654831%
OH1456	Pleasant Hill Village, Ohio	0.0002839214%
OH1457	Pleasant Plain Village, Ohio	0.0000116356%
OH1458	Pleasant Township, Brown County, Ohio	0.0012092450%
OH1459	Pleasant Township, Clark County, Ohio	0.0032390047%
OH1460	Pleasant Township, Fairfield County, Ohio	0.0068849393%
OH1461	Pleasant Township, Franklin County, Ohio	0.0137844922%
OH1462	Pleasant Township, Hancock County, Ohio	0.0002811062%
OH1463	Pleasant Township, Henry County, Ohio	0.0002233406%
OH1464	Pleasant Township, Knox County, Ohio	0.0045641970%
OH1465	Pleasant Township, Marion County, Ohio	0.0096326984%
OH1466	Pleasant Township, Perry County, Ohio	0.0001828826%
OH1467	Pleasant Township, Seneca County, Ohio	0.0003208676%
OH1468	Pleasant Township, Van Wert County, Ohio	0.0002849717%
OH1469	Pleasantville Village, Ohio	0.0000570350%
OH1470	Plymouth Township, Ohio	0.0017493844%
OH1471	Plymouth Village, Ohio	0.0065060016%
OH1472	Poland Township, Ohio	0.0148262002%
OH1473	Poland Village, Ohio	0.0061663235%
OH1474	Polk Township, Ohio	0.0010767393%
OH1475	Polk Village, Ohio	0.0000406694%
OH1476	Pomeroy Village, Ohio	0.0093881741%
OH1477	Port Clinton City, Ohio	0.0145364578%
OH1478	Port Jefferson Village, Ohio	0.0003105872%

State ID	Qualifying Subdivision	Consolidated State Allocation
OH1479	Port Washington Village, Ohio	0.0003251687%
OH1480	Port William Village, Ohio	0.0010928837%
OH1481	Portage County, Ohio	0.9187057360%
OH1482	Portage Township, Hancock County, Ohio	0.0001686637%
OH1483	Portage Township, Ottawa County, Ohio	0.0000480885%
OH1484	Portage Township, Wood County, Ohio	0.0001408137%
OH1485	Portage Village, Ohio	0.0016040519%
OH1486	Porter Township, Delaware County, Ohio	0.0036954857%
OH1487	Porter Township, Scioto County, Ohio	0.0395496982%
OH1488	Portsmouth City, Ohio	0.2233662325%
OH1489	Potsdam Village, Ohio	0.0000227137%
OH1490	Powell City, Ohio	0.0184361841%
OH1491	Powhatan Point Village, Ohio	0.0016591645%
OH1492	Prairie Township, Franklin County, Ohio	0.0344574120%
OH1493	Prairie Township, Holmes County, Ohio	0.0003867956%
OH1494	Preble County, Ohio	0.3067055248%
OH1495	Proctorville Village, Ohio	0.0018254771%
OH1496	Prospect Village, Ohio	0.0011157566%
OH1497	Providence Township, Ohio	0.0026476678%
OH1498	Pulaski Township, Ohio	0.0002907439%
OH1499	Pultney Township, Ohio	0.0018560145%
OH1500	Pusheta Township, Ohio	0.0002670784%
OH1501	Put In Bay Township, Ohio	0.0034623699%
OH1502	Put-In-Bay Village, Ohio	0.0040050827%
OH1503	Putnam County, Ohio	0.1372967601%
OH1504	Quaker City Village, Ohio	0.0004351328%
OH1505	Quincy Village, Ohio	0.0003391631%
OH1506	Raccoon Township, Ohio	0.0003561309%
OH1507	Racine Village, Ohio	0.0010826003%
OH1508	Radnor Township, Ohio	0.0001814747%
OH1509	Randolph Township, Ohio	0.0013730943%
OH1510	Range Township, Ohio	0.0007149570%
OH1511	Rarden Township, Ohio	0.0020471447%
OH1512	Rarden Village, Ohio	0.0005117862%
OH1513	Ravenna City, Ohio	0.0218557620%
OH1514	Ravenna Township, Ohio	0.0059636168%
OH1515	Rawson Village, Ohio	0.0001405531%
OH1516	Rayland Village, Ohio	0.0003984552%
OH1517	Reading City, Ohio	0.0457344992%
OH1518	Reading Township, Ohio	0.0019364040%
OH1519	Recovery Township, Ohio	0.0000812132%
OH1520	Reily Township, Ohio	0.0012764211%

State ID	Qualifying Subdivision	Consolidated State Allocation
OH1521	Reminderville Village, Ohio	0.0151415568%
OH1522	Rendville Village, Ohio	0.0001828826%
OH1523	Republic Village, Ohio	0.0011130095%
OH1524	Reynoldsburg City, Ohio	0.0697130845%
OH1525	Rice Township, Ohio	0.0003978688%
OH1526	Richfield Township, Henry County, Ohio	0.0023349246%
OH1527	Richfield Township, Lucas County, Ohio	0.0047039321%
OH1528	Richfield Township, Summit County, Ohio	0.0095996121%
OH1529	Richfield Village, Ohio	0.0399887454%
OH1530	Richland County, Ohio	0.7455113947%
OH1531	Richland Township, Allen County, Ohio	0.0002999883%
OH1532	Richland Township, Belmont County, Ohio	0.0026715361%
OH1533	Richland Township, Clinton County, Ohio	0.0005798975%
OH1534	Richland Township, Darke County, Ohio	0.0002952534%
OH1535	Richland Township, Fairfield County, Ohio	0.0003503579%
OH1536	Richland Township, Holmes County, Ohio	0.0001483201%
OH1537	Richland Township, Wyandot County, Ohio	0.0001079437%
OH1538	Richmond Heights City, Ohio	0.0218650269%
OH1539	Richmond Township, Ashtabula County, Ohio	0.0003170025%
OH1540	Richmond Township, Huron County, Ohio	0.0015099572%
OH1541	Richmond Village, Ohio	0.0007609773%
OH1542	Richwood Village, Ohio	0.0014048433%
OH1543	Ridgefield Township, Ohio	0.0003431721%
OH1544	Ridgeville Township, Ohio	0.0002165727%
OH1545	Ridgeway Village, Ohio	0.0003864298%
OH1546	Riley Township, Ohio	0.0007202182%
OH1547	Rio Grande Village, Ohio	0.0014432672%
OH1548	Ripley Township, Holmes County, Ohio	0.0000348988%
OH1549	Ripley Township, Huron County, Ohio	0.0000137269%
OH1550	Ripley Village, Ohio	0.0111932679%
OH1551	Risingsun Village, Ohio	0.0004530528%
OH1552	Rittman City, Ohio	0.0059649971%
OH1553	Riverlea Village, Ohio	0.0001680104%
OH1554	Riverside City, Ohio	0.0817797700%
OH1555	Roaming Shores Village, Ohio	0.0034987688%

State ID	Qualifying Subdivision	Consolidated State Allocation
OH1556	Rochester Township, Ohio	0.0013537465%
OH1557	Rochester Village, Ohio	0.0000194784%
OH1558	Rock Creek Village, Ohio	0.0002113350%
OH1559	Rockford Village, Ohio	0.0018408327%
OH1560	Rocky Ridge Village, Ohio	0.0002129632%
OH1561	Rocky River City, Ohio	0.0503638414%
OH1562	Rogers Village, Ohio	0.0005457718%
OH1563	Rome Township, Ashtabula County, Ohio	0.0014206410%
OH1564	Rome Township, Athens County, Ohio	0.0002813909%
OH1565	Rome Township, Lawrence County, Ohio	0.0010605153%
OH1566	Rome Village, Ohio	0.0002586036%
OH1567	Rootstown Township, Ohio	0.0026527533%
OH1568	Rose Township, Ohio	0.0004793086%
OH1569	Roseville Village, Ohio	0.0016522526%
OH1570	Ross County, Ohio	1.0109583321%
OH1571	Ross Township, Butler County, Ohio	0.0261747113%
OH1572	Ross Township, Greene County, Ohio	0.0002579678%
OH1573	Ross Township, Jefferson County, Ohio	0.0004940844%
OH1574	Rossburg Village, Ohio	0.0000984178%
OH1575	Rossford City, Ohio	0.0126977241%
OH1576	Roswell Village, Ohio	0.0002759007%
OH1577	Roundhead Township, Ohio	0.0002332423%
OH1578	Royalton Township, Ohio	0.0009661532%
OH1579	Rumley Township, Ohio	0.0006297965%
OH1580	Rush Creek Township, Ohio	0.0026562014%
OH1581	Rush Township, Scioto County, Ohio	0.0047482384%
OH1582	Rush Township, Tuscarawas County, Ohio	0.0000689752%
OH1583	Rushcreek Township, Ohio	0.0004189662%
OH1584	Rushsylvania Village, Ohio	0.0000099754%
OH1585	Rushville Village, Ohio	0.0000244436%
OH1586	Russell Township, Ohio	0.0185770784%
OH1587	Russells Point Village, Ohio	0.0022943385%
OH1588	Russellville Village, Ohio	0.0057671685%
OH1589	Russia Village, Ohio	0.0003460829%
OH1590	Rutland Village, Ohio	0.0004567220%
OH1591	Sabina Village, Ohio	0.0072933257%
OH1592	Sagamore Hills Township, Ohio	0.0226207726%
OH1593	Salem City, Ohio	0.0383095249%
OH1594	Salem Township, Auglaize County, Ohio	0.0001157340%

State ID	Qualifying Subdivision	Consolidated State Allocation
OH1595	Salem Township, Champaign County, Ohio	0.0003806616%
OH1596	Salem Township, Columbiana County, Ohio	0.0009051824%
OH1597	Salem Township, Muskingum County, Ohio	0.0003912060%
OH1598	Salem Township, Ottawa County, Ohio	0.0007213271%
OH1599	Salem Township, Shelby County, Ohio	0.0010648705%
OH1600	Salem Township, Tuscarawas County, Ohio	0.0026407637%
OH1601	Salem Township, Warren County, Ohio	0.0074583911%
OH1602	Salem Township, Washington County, Ohio	0.0005013228%
OH1603	Salesville Village, Ohio	0.0000679895%
OH1604	Salineville Village, Ohio	0.0034609917%
OH1605	Salisbury Township, Ohio	0.0003552282%
OH1606	Salt Creek Township, Hocking County, Ohio	0.0001833021%
OH1607	Salt Creek Township, Holmes County, Ohio	0.0000465318%
OH1608	Salt Creek Township, Wayne County, Ohio	0.0001391765%
OH1609	Salt Lick Township, Ohio	0.0000430312%
OH1610	Salt Rock Township, Ohio	0.0007066458%
OH1611	Saltcreek Township, Ohio	0.0003935151%
OH1612	Sandusky City, Ohio	0.1261336610%
OH1613	Sandusky County, Ohio	0.3072903644%
OH1614	Sandusky Township, Crawford County, Ohio	0.0000108762%
OH1615	Sandusky Township, Sandusky County, Ohio	0.0015100930%
OH1616	Sandy Township, Stark County, Ohio	0.0049479536%
OH1617	Sandy Township, Tuscarawas County, Ohio	0.0006897517%
OH1618	Sarahsville Village, Ohio	0.0000689910%
OH1619	Sardinia Village, Ohio	0.0044028921%
OH1620	Savannah Village, Ohio	0.0002294615%
OH1621	Saybrook Township, Ohio	0.0161906113%
OH1622	Scio Village, Ohio	0.0001526779%
OH1623	Scioto County, Ohio	0.9401796346%
OH1624	Scioto Township, Delaware County, Ohio	0.0019714756%
OH1625	Scioto Township, Pickaway County, Ohio	0.0062913839%

State ID	Qualifying Subdivision	Consolidated State Allocation
OH1626	Scioto Township, Pike County, Ohio	0.0002619631%
OH1627	Scioto Township, Ross County, Ohio	0.0146969071%
OH1628	Scipio Township, Meigs County, Ohio	0.0004736376%
OH1629	Scipio Township, Seneca County, Ohio	0.0005615183%
OH1630	Scott Township, Marion County, Ohio	0.0001301716%
OH1631	Scott Township, Sandusky County, Ohio	0.0009313747%
OH1632	Scott Village, Ohio	0.0006416289%
OH1633	Seal Township, Ohio	0.0013351665%
OH1634	Seaman Village, Ohio	0.0025035030%
OH1635	Sebring Village, Ohio	0.0078737318%
OH1636	Seneca County, Ohio	0.2801274556%
OH1637	Seneca Township, Monroe County, Ohio	0.0000124681%
OH1638	Seneca Township, Noble County, Ohio	0.0000172477%
OH1639	Senecaville Village, Ohio	0.0007886782%
OH1640	Seven Hills City, Ohio	0.0208535620%
OH1641	Seven Mile Village, Ohio	0.0013087356%
OH1642	Seville Village, Ohio	0.0055383307%
OH1643	Shadyside Village, Ohio	0.0078177582%
OH1644	Shaker Heights City, Ohio	0.1048407101%
OH1645	Shalersville Township, Ohio	0.0000934354%
OH1646	Sharon Township, Franklin County, Ohio	0.0053763338%
OH1647	Sharon Township, Medina County, Ohio	0.0058099333%
OH1648	Sharon Township, Richland County, Ohio	0.0000802853%
OH1649	Sharonville City, Ohio	0.1284229161%
OH1650	Shawnee Hills Village, Ohio	0.0030520752%
OH1651	Shawnee Township, Ohio	0.0289829613%
OH1652	Shawnee Village, Ohio	0.0005916790%
OH1653	Sheffield Lake City, Ohio	0.0113266702%
OH1654	Sheffield Township, Ashtabula County, Ohio	0.0012562693%
OH1655	Sheffield Township, Lorain County, Ohio	0.0039054125%
OH1656	Sheffield Village, Ohio	0.0383431647%
OH1657	Shelby City, Ohio	0.0301426674%
OH1658	Shelby County, Ohio	0.2601922372%
OH1659	Sherrodsville Village, Ohio	0.0010675510%
OH1660	Sherwood Village, Ohio	0.0012358778%
OH1661	Shiloh Village, Ohio	0.0001516500%

State ID	Qualifying Subdivision	Consolidated State Allocation
OH1662	Shreve Village, Ohio	0.0012061965%
OH1663	Sidney City, Ohio	0.0768126600%
OH1664	Silver Lake Village, Ohio	0.0087129009%
OH1665	Silverton Village, Ohio	0.0117488480%
OH1666	Sinking Spring Village, Ohio	0.0018697801%
OH1667	Smith Township, Belmont County, Ohio	0.0011670394%
OH1668	Smith Township, Mahoning County, Ohio	0.0056258490%
OH1669	Smithfield Township, Ohio	0.0003028259%
OH1670	Smithfield Village, Ohio	0.0021516579%
OH1671	Smithville Village, Ohio	0.0012448566%
OH1672	Solon City, Ohio	0.0575665779%
OH1673	Somerford Township, Ohio	0.0018806477%
OH1674	Somers Township, Ohio	0.0009493500%
OH1675	Somerset Village, Ohio	0.0013447250%
OH1676	Somerville Village, Ohio	0.0001615723%
OH1677	South Amherst Village, Ohio	0.0020257501%
OH1678	South Bloomfield Township, Ohio	0.0004782339%
OH1679	South Bloomfield Village, Ohio	0.0012874261%
OH1680	South Charleston Village, Ohio	0.0026810249%
OH1681	South Euclid City, Ohio	0.0416202012%
OH1682	South Lebanon Village, Ohio	0.0058643200%
OH1683	South Point Village, Ohio	0.0061370801%
OH1684	South Russell Village, Ohio	0.0067283287%
OH1685	South Salem Village, Ohio	0.0005572426%
OH1686	South Solon Village, Ohio	0.0007460421%
OH1687	South Vienna Village, Ohio	0.0009118207%
OH1688	South Webster Village, Ohio	0.0024736332%
OH1689	South Zanesville Village, Ohio	0.0015547932%
OH1690	Southington Township, Ohio	0.0014492645%
OH1691	Sparta Village, Ohio	0.0000770825%
OH1692	Spencer Township, Allen County, Ohio	0.0001636300%
OH1693	Spencer Township, Guernsey County, Ohio	0.0001631748%
OH1694	Spencer Township, Lucas County, Ohio	0.0024565990%
OH1695	Spencer Township, Medina County, Ohio	0.0000708528%
OH1696	Spencer Village, Ohio	0.0016178066%
OH1697	Spencerville Village, Ohio	0.0025294469%
OH1698	Sprigg Township, Ohio	0.0001054107%
OH1699	Spring Valley Township, Ohio	0.0070786377%
OH1700	Spring Valley Village, Ohio	0.0001444620%
OH1701	Springboro City, Ohio	0.0299889938%
OH1702	Springdale City, Ohio	0.0692154947%
OH1703	Springfield City, Ohio	0.4735887613%

State ID	Qualifying Subdivision	Consolidated State Allocation
OH1704	Springfield Township, Clark County, Ohio	0.0105063514%
OH1705	Springfield Township, Gallia County, Ohio	0.0009746740%
OH1706	Springfield Township, Hamilton County, Ohio	0.1053972703%
OH1707	Springfield Township, Jefferson County, Ohio	0.0002231349%
OH1708	Springfield Township, Lucas County, Ohio	0.0432543386%
OH1709	Springfield Township, Mahoning County, Ohio	0.0039675747%
OH1710	Springfield Township, Richland County, Ohio	0.0177162881%
OH1711	Springfield Township, Ross County, Ohio	0.0053121351%
OH1712	Springfield Township, Summit County, Ohio	0.0469667767%
OH1713	Springfield Township, Williams County, Ohio	0.0004950504%
OH1714	St Albans Township, Ohio	0.0043369348%
OH1715	St Clair Township, Butler County, Ohio	0.0005493458%
OH1716	St Clair Township, Columbiana County, Ohio	0.0167991211%
OH1717	St Marys Township, Ohio	0.0002136628%
OH1718	St. Bernard Village, Ohio	0.0379854367%
OH1719	St. Clairsville City, Ohio	0.0187569954%
OH1720	St. Henry Village, Ohio	0.0014076956%
OH1721	St. Louisville Village, Ohio	0.0003799451%
OH1722	St. Marys City, Ohio	0.0281144576%
OH1723	St. Paris Village, Ohio	0.0038066155%
OH1724	Stafford Village, Ohio	0.0000249362%
OH1725	Stark County, Ohio	1.5315796664%
OH1726	Starr Township, Ohio	0.0001436692%
OH1727	Staunton Township, Ohio	0.0003747763%
OH1728	Sterling Township, Ohio	0.0043408795%
OH1729	Steubenville City, Ohio	0.1367338744%
OH1730	Steubenville Township, Ohio	0.0000318764%
OH1731	Stock Township, Harrison County, Ohio	0.0003339830%
OH1732	Stock Township, Noble County, Ohio	0.0000344955%
OH1733	Stockport Village, Ohio	0.0002249256%
OH1734	Stokes Township, Logan County, Ohio	0.0047782092%
OH1735	Stokes Township, Madison County, Ohio	0.0007615846%
OH1736	Stone Creek Village, Ohio	0.0001379503%

State ID	Qualifying Subdivision	Consolidated State Allocation
OH1737	Stonelick Township, Ohio	0.0184280231%
OH1738	Stoutsville Village, Ohio	0.0000733307%
OH1739	Stow City, Ohio	0.1475892163%
OH1740	Strasburg Village, Ohio	0.0032911011%
OH1741	Stratton Village, Ohio	0.0014981914%
OH1742	Streetsboro City, Ohio	0.0206045399%
OH1743	Strongsville City, Ohio	0.0739396664%
OH1744	Struthers City, Ohio	0.0252671862%
OH1745	Stryker Village, Ohio	0.0016737417%
OH1746	Suffield Township, Ohio	0.0026771277%
OH1747	Sugar Bush Knolls Village, Ohio	0.0000982645%
OH1748	Sugar Creek Township, Allen County, Ohio	0.0002727166%
OH1749	Sugar Creek Township, Putnam County, Ohio	0.0001655674%
OH1750	Sugar Creek Township, Wayne County, Ohio	0.0003634054%
OH1751	Sugar Grove Village, Ohio	0.0001955486%
OH1752	Sugarcreek Township, Ohio	0.0470017417%
OH1753	Sugarcreek Village, Ohio	0.0027688605%
OH1754	Sullivan Township, Ohio	0.0017162492%
OH1755	Summerfield Village, Ohio	0.0001212800%
OH1756	Summit Township, Ohio	0.0000062341%
OH1757	Summitville Village, Ohio	0.0004792142%
OH1758	Sunbury Village, Ohio	0.0082323543%
OH1759	Sunfish Township, Ohio	0.0000676034%
OH1760	Swan Creek Township, Ohio	0.0048429959%
OH1761	Swanton Township, Ohio	0.0015012549%
OH1762	Swanton Village, Ohio	0.0072434936%
OH1763	Switzerland Township, Ohio	0.0001807876%
OH1764	Sycamore Township, Hamilton County, Ohio	0.0584269292%
OH1765	Sycamore Township, Wyandot County, Ohio	0.0002766058%
OH1766	Sycamore Village, Ohio	0.0012008738%
OH1767	Sylvania City, Ohio	0.0526622027%
OH1768	Sylvania Township, Ohio	0.1247952267%
OH1769	Symmes Township, Hamilton County, Ohio	0.0305202839%
OH1770	Symmes Township, Lawrence County, Ohio	0.0000521565%
OH1771	Syracuse Village, Ohio	0.0005413001%
OH1772	Tallmadge City, Ohio	0.0580737905%
OH1773	Tarlton Village, Ohio	0.0002242634%
OH1774	Tate Township, Ohio	0.0267197716%
OH1775	Taylor Creek Township, Ohio	0.0001110677%
OH1776	Terrace Park Village, Ohio	0.0056698421%
OH1777	Texas Township, Ohio	0.0002936562%

State ID	Qualifying Subdivision	Consolidated State Allocation
OH1778	The Village of Indian Hill City, Ohio	0.0264202950%
OH1779	Thompson Township, Delaware County, Ohio	0.0002474656%
OH1780	Thompson Township, Geauga County, Ohio	0.0022491568%
OH1781	Thorn Township, Ohio	0.0007422882%
OH1782	Thornville Village, Ohio	0.0006131946%
OH1783	Thurston Village, Ohio	0.0013688400%
OH1784	Tiffin City, Ohio	0.0703803061%
OH1785	Tiffin Township, Ohio	0.0005075927%
OH1786	Tiltonsville Village, Ohio	0.0016575735%
OH1787	Timberlake Village, Ohio	0.0023312243%
OH1788	Tipp City, Ohio	0.0376479790%
OH1789	Tiro Village, Ohio	0.0000326285%
OH1790	Toledo City, Ohio	1.0197706186%
OH1791	Tontogany Village, Ohio	0.0001897924%
OH1792	Toronto City, Ohio	0.0279077997%
OH1793	Townsend Township, Huron County, Ohio	0.0006177098%
OH1794	Townsend Township, Sandusky County, Ohio	0.0000271274%
OH1795	Tremont City Village, Ohio	0.0006396354%
OH1796	Trenton City, Ohio	0.0416371797%
OH1797	Trenton Township, Ohio	0.0000577420%
OH1798	Trimble Township, Ohio	0.0023032365%
OH1799	Trimble Village, Ohio	0.0004320101%
OH1800	Trotwood City, Ohio	0.0811683100%
OH1801	Troy City, Ohio	0.0899917302%
OH1802	Troy Township, Ashland County, Ohio	0.0002358826%
OH1803	Troy Township, Athens County, Ohio	0.0008754383%
OH1804	Troy Township, Geauga County, Ohio	0.0026032794%
OH1805	Troy Township, Richland County, Ohio	0.0034790294%
OH1806	Troy Township, Wood County, Ohio	0.0027734180%
OH1807	Trumbull County, Ohio	2.0203599712%
OH1808	Trumbull Township, Ohio	0.0006457459%
OH1809	Truro Township, Ohio	0.0493339720%
OH1810	Tully Township, Ohio	0.0007929647%
OH1811	Turtle Creek Township, Ohio	0.0003372090%
OH1812	Turtlecreek Township, Ohio	0.0071325956%
OH1813	Tuscarawas County, Ohio	0.3721703206%
OH1814	Tuscarawas Township, Ohio	0.0020979323%
OH1815	Tuscarawas Village, Ohio	0.0003842902%

State ID	Qualifying Subdivision	Consolidated State Allocation
OH1816	Twin Township, Darke County, Ohio	0.0003813690%
OH1817	Twin Township, Ross County, Ohio	0.0052531114%
OH1818	Twinsburg City, Ohio	0.0833508485%
OH1819	Tymochtee Township, Ohio	0.0003170847%
OH1820	Uhrichsville City, Ohio	0.0101787647%
OH1821	Union City Village, Ohio	0.0076150778%
OH1822	Union City, Ohio	0.0198982889%
OH1823	Union County, Ohio	0.3002174205%
OH1824	Union Township, Auglaize County, Ohio	0.0001691497%
OH1825	Union Township, Carroll County, Ohio	0.0000762536%
OH1826	Union Township, Champaign County, Ohio	0.0000211479%
OH1827	Union Township, Clermont County, Ohio	0.3185341547%
OH1828	Union Township, Clinton County, Ohio	0.0085869431%
OH1829	Union Township, Fayette County, Ohio	0.0014043033%
OH1830	Union Township, Highland County, Ohio	0.0112248527%
OH1831	Union Township, Lawrence County, Ohio	0.0011822137%
OH1832	Union Township, Licking County, Ohio	0.0076823054%
OH1833	Union Township, Logan County, Ohio	0.0001197046%
OH1834	Union Township, Mercer County, Ohio	0.0004692319%
OH1835	Union Township, Miami County, Ohio	0.0038499743%
OH1836	Union Township, Muskingum County, Ohio	0.0003209896%
OH1837	Union Township, Pike County, Ohio	0.0001098555%
OH1838	Union Township, Ross County, Ohio	0.0119227921%
OH1839	Union Township, Tuscarawas County, Ohio	0.0002167791%
OH1840	Union Township, Union County, Ohio	0.0002502189%
OH1841	Union Township, Van Wert County, Ohio	0.0002973617%
OH1842	Union Township, Warren County, Ohio	0.0079936267%
OH1843	Unionville Center Village, Ohio	0.0001475046%

State ID	Qualifying Subdivision	Consolidated State Allocation
OH1844	Uniopolis Village, Ohio	0.0002492732%
OH1845	Unity Township, Ohio	0.0000798690%
OH1846	University Heights City, Ohio	0.0306916388%
OH1847	Upper Arlington City, Ohio	0.1198448950%
OH1848	Upper Sandusky City, Ohio	0.0108550896%
OH1849	Upper Township, Ohio	0.0007475763%
OH1850	Urbana City, Ohio	0.0575116162%
OH1851	Urbancrest Village, Ohio	0.0003436577%
OH1852	Utica Village, Ohio	0.0044986588%
OH1853	Valley Hi Village, Ohio	0.0001316045%
OH1854	Valley Township, Guernsey County, Ohio	0.0005439160%
OH1855	Valley Township, Scioto County, Ohio	0.0018196842%
OH1856	Valley View Village, Ohio	0.0158831601%
OH1857	Valleyview Village, Ohio	0.0016037359%
OH1858	Van Buren Township, Darke County, Ohio	0.0003444623%
OH1859	Van Buren Township, Putnam County, Ohio	0.0002317943%
OH1860	Van Buren Township, Shelby County, Ohio	0.0003904525%
OH1861	Van Buren Village, Ohio	0.0001188906%
OH1862	Van Wert City, Ohio	0.0528808311%
OH1863	Van Wert County, Ohio	0.1122540604%
OH1864	Vandalia City, Ohio	0.0967305650%
OH1865	Vanlue Village, Ohio	0.0001114793%
OH1866	Venedocia Village, Ohio	0.0000371702%
OH1867	Venice Township, Ohio	0.0000100271%
OH1868	Vermilion City, Ohio	0.0432196320%
OH1869	Vermilion Township, Ohio	0.0012778552%
OH1870	Vermillion Township, Ohio	0.0004880329%
OH1871	Vernon Township, Crawford County, Ohio	0.0000108762%
OH1872	Vernon Township, Scioto County, Ohio	0.0038952614%
OH1873	Vernon Township, Trumbull County, Ohio	0.0006308563%
OH1874	Verona Village, Ohio	0.0012373333%
OH1875	Versailles Village, Ohio	0.0100017096%
OH1876	Vienna Township, Ohio	0.0042113922%
OH1877	Vinton County, Ohio	0.1090168446%
OH1878	Vinton Township, Ohio	0.0001170406%
OH1879	Vinton Village, Ohio	0.0005060807%
OH1880	Violet Township, Ohio	0.0621844457%
OH1881	Virginia Township, Ohio	0.0000841915%
OH1882	Wabash Township, Ohio	0.0000492089%
OH1883	Wadsworth City, Ohio	0.0760959559%
OH1884	Waite Hill Village, Ohio	0.0053068521%

State ID	Qualifying Subdivision	Consolidated State Allocation
OH1885	Wakeman Village, Ohio	0.0018119487%
OH1886	Walbridge Village, Ohio	0.0029019871%
OH1887	Waldo Township, Ohio	0.0000743838%
OH1888	Waldo Village, Ohio	0.0004160980%
OH1889	Walnut Township, Fairfield County, Ohio	0.0087100593%
OH1890	Walnut Township, Gallia County, Ohio	0.0001499498%
OH1891	Walton Hills Village, Ohio	0.0099526568%
OH1892	Wapakoneta City, Ohio	0.0275268850%
OH1893	Ward Township, Ohio	0.0001486233%
OH1894	Warren City, Ohio	0.3520178232%
OH1895	Warren County, Ohio	1.0504230532%
OH1896	Warren Township, Belmont County, Ohio	0.0000984250%
OH1897	Warren Township, Jefferson County, Ohio	0.0004303316%
OH1898	Warren Township, Trumbull County, Ohio	0.0001534515%
OH1899	Warren Township, Tuscarawas County, Ohio	0.0002069255%
OH1900	Warren Township, Washington County, Ohio	0.0008773149%
OH1901	Warrensville Heights City, Ohio	0.0361164097%
OH1902	Warsaw Village, Ohio	0.0003911414%
OH1903	Warwick Township, Ohio	0.0008474093%
OH1904	Washington County, Ohio	0.3325608246%
OH1905	Washington Court House City, Ohio	0.0376016242%
OH1906	Washington Township, Auglaize County, Ohio	0.0023680955%
OH1907	Washington Township, Belmont County, Ohio	0.0000843643%
OH1908	Washington Township, Brown County, Ohio	0.0011782387%
OH1909	Washington Township, Carroll County, Ohio	0.0002178675%
OH1910	Washington Township, Clermont County, Ohio	0.0305984481%
OH1911	Washington Township, Clinton County, Ohio	0.0029440948%
OH1912	Washington Township, Columbiana County, Ohio	0.0006256408%
OH1913	Washington Township, Coshocton County, Ohio	0.0000841915%
OH1914	Washington Township, Darke County, Ohio	0.0003198579%
OH1915	Washington Township, Defiance County, Ohio	0.0003531079%

State ID	Qualifying Subdivision	Consolidated State Allocation
OH1916	Washington Township, Franklin County, Ohio	0.1225330619%
OH1917	Washington Township, Guernsey County, Ohio	0.0000951853%
OH1918	Washington Township, Hancock County, Ohio	0.0008925122%
OH1919	Washington Township, Harrison County, Ohio	0.0003339830%
OH1920	Washington Township, Henry County, Ohio	0.0002571801%
OH1921	Washington Township, Highland County, Ohio	0.0004065339%
OH1922	Washington Township, Hocking County, Ohio	0.0002427514%
OH1923	Washington Township, Holmes County, Ohio	0.0000261741%
OH1924	Washington Township, Jackson County, Ohio	0.0003315132%
OH1925	Washington Township, Lawrence County, Ohio	0.0000695420%
OH1926	Washington Township, Licking County, Ohio	0.0008154920%
OH1927	Washington Township, Logan County, Ohio	0.0017756185%
OH1928	Washington Township, Lucas County, Ohio	0.0071150384%
OH1929	Washington Township, Mercer County, Ohio	0.0001173080%
OH1930	Washington Township, Miami County, Ohio	0.0009766897%
OH1931	Washington Township, Monroe County, Ohio	0.0000062341%
OH1932	Washington Township, Montgomery County, Ohio	0.1316317394%
OH1933	Washington Township, Morrow County, Ohio	0.0002420690%
OH1934	Washington Township, Muskingum County, Ohio	0.0014845767%
OH1935	Washington Township, Paulding County, Ohio	0.0000402008%
OH1936	Washington Township, Pickaway County, Ohio	0.0003983733%
OH1937	Washington Township, Preble County, Ohio	0.0006874604%
OH1938	Washington Township, Richland County, Ohio	0.0012132000%
OH1939	Washington Township, Sandusky County, Ohio	0.0006510581%

State ID	Qualifying Subdivision	Consolidated State Allocation
OH1940	Washington Township, Scioto County, Ohio	0.0113445935%
OH1941	Washington Township, Shelby County, Ohio	0.0000798653%
OH1942	Washington Township, Stark County, Ohio	0.0006531299%
OH1943	Washington Township, Wood County, Ohio	0.0002265264%
OH1944	Washingtonville Village, Ohio	0.0014015930%
OH1945	Waterford Township, Ohio	0.0050048725%
OH1946	Waterloo Township, Ohio	0.0006670006%
OH1947	Watertown Township, Ohio	0.0001503968%
OH1948	Waterville City, Ohio	0.0124831621%
OH1949	Waterville Township, Ohio	0.0015558460%
OH1950	Wauseon City, Ohio	0.0277126990%
OH1951	Waverly Village, Ohio	0.0077490360%
OH1952	Wayne County, Ohio	0.2257675097%
OH1953	Wayne Lakes Village, Ohio	0.0075166600%
OH1954	Wayne Township, Adams County, Ohio	0.0012649279%
OH1955	Wayne Township, Ashtabula County, Ohio	0.0005165967%
OH1956	Wayne Township, Auglaize County, Ohio	0.0004273255%
OH1957	Wayne Township, Belmont County, Ohio	0.0000562429%
OH1958	Wayne Township, Butler County, Ohio	0.0007432325%
OH1959	Wayne Township, Champaign County, Ohio	0.0014909244%
OH1960	Wayne Township, Clermont County, Ohio	0.0020513889%
OH1961	Wayne Township, Clinton County, Ohio	0.0002007337%
OH1962	Wayne Township, Columbiana County, Ohio	0.0005990178%
OH1963	Wayne Township, Darke County, Ohio	0.0000369067%
OH1964	Wayne Township, Fayette County, Ohio	0.0001404303%
OH1965	Wayne Township, Jefferson County, Ohio	0.0021038433%
OH1966	Wayne Township, Monroe County, Ohio	0.0000062341%
OH1967	Wayne Township, Muskingum County, Ohio	0.0001404329%
OH1968	Wayne Township, Noble County, Ohio	0.0000862387%

State ID	Qualifying Subdivision	Consolidated State Allocation
OH1969	Wayne Township, Pickaway County, Ohio	0.0000437239%
OH1970	Wayne Township, Tuscarawas County, Ohio	0.0003941438%
OH1971	Wayne Township, Warren County, Ohio	0.0038164622%
OH1972	Wayne Village, Ohio	0.0008081483%
OH1973	Waynesburg Village, Ohio	0.0012073007%
OH1974	Waynesfield Village, Ohio	0.0007567223%
OH1975	Waynesville Village, Ohio	0.0046309511%
OH1976	Weathersfield Township, Ohio	0.0249955502%
OH1977	Weller Township, Ohio	0.0004460294%
OH1978	Wellington Village, Ohio	0.0164981765%
OH1979	Wells Township, Ohio	0.0100888848%
OH1980	Wellston City, Ohio	0.0406103723%
OH1981	Wellsville Village, Ohio	0.0125660620%
OH1982	Wesley Township, Ohio	0.0001253307%
OH1983	West Alexandria Village, Ohio	0.0099845432%
OH1984	West Carrollton City, Ohio	0.0603546931%
OH1985	West Chester Township, Ohio	0.3737167118%
OH1986	West Elkton Village, Ohio	0.0026843690%
OH1987	West Farmington Village, Ohio	0.0001875519%
OH1988	West Jefferson Village, Ohio	0.0159155640%
OH1989	West Lafayette Village, Ohio	0.0026252451%
OH1990	West Leipsic Village, Ohio	0.0002152376%
OH1991	West Liberty Village, Ohio	0.0035013600%
OH1992	West Manchester Village, Ohio	0.0025206880%
OH1993	West Mansfield Village, Ohio	0.0000798031%
OH1994	West Millgrove Village, Ohio	0.0001102020%
OH1995	West Milton Village, Ohio	0.0098350376%
OH1996	West Rushville Village, Ohio	0.0001070525%
OH1997	West Salem Village, Ohio	0.0004987159%
OH1998	West Township, Ohio	0.0005857063%
OH1999	West Union Village, Ohio	0.0111998820%
OH2000	West Unity Village, Ohio	0.0014694352%
OH2001	Westerville City, Ohio	0.2122517954%
OH2002	Westfield Center Village, Ohio	0.0015469538%
OH2003	Westfield Township, Ohio	0.0022200558%
OH2004	Westlake City, Ohio	0.0470647273%
OH2005	Westland Township, Ohio	0.0000407937%
OH2006	Weston Township, Ohio	0.0001040797%
OH2007	Weston Village, Ohio	0.0009305950%
OH2008	Wharton Village, Ohio	0.0000269859%
OH2009	Wheeling Township, Belmont County, Ohio	0.0005343072%
OH2010	Wheeling Township, Guernsey County, Ohio	0.0000407937%
OH2011	Whetstone Township, Ohio	0.0003262846%
OH2012	White Eyes Township, Ohio	0.0001913444%

State ID	Qualifying Subdivision	Consolidated State Allocation
OH2013	Whitehall City, Ohio	0.0708163966%
OH2014	Whitehouse Village, Ohio	0.0191159792%
OH2015	Whitewater Township, Ohio	0.0072647461%
OH2016	Wickliffe City, Ohio	0.0543194216%
OH2017	Wilkesville Township, Ohio	0.0005461896%
OH2018	Wilkesville Village, Ohio	0.0001034151%
OH2019	Willard City, Ohio	0.0338504955%
OH2020	Williams County, Ohio	0.1507467614%
OH2021	Williamsburg Township, Ohio	0.0138253270%
OH2022	Williamsburg Village, Ohio	0.0064127452%
OH2023	Williamsfield Township, Ohio	0.0004696334%
OH2024	Williamsport Village, Ohio	0.0004226644%
OH2025	Willoughby City, Ohio	0.1356374532%
OH2026	Willoughby Hills City, Ohio	0.0528410843%
OH2027	Willowick City, Ohio	0.0540256495%
OH2028	Wills Township, Ohio	0.0001087832%
OH2029	Willshire Village, Ohio	0.0006690639%
OH2030	Wilmington City, Ohio	0.1278227818%
OH2031	Wilmot Village, Ohio	0.0024343932%
OH2032	Wilson Township, Ohio	0.0006914162%
OH2033	Wilson Village, Ohio	0.0001415832%
OH2034	Winchester Village, Ohio	0.0033994936%
OH2035	Windham Township, Ohio	0.0001218723%
OH2036	Windham Village, Ohio	0.0030305573%
OH2037	Windsor Township, Ashtabula County, Ohio	0.0006340051%
OH2038	Windsor Township, Lawrence County, Ohio	0.0007128053%
OH2039	Windsor Township, Morgan County, Ohio	0.0004926943%
OH2040	Wintersville Village, Ohio	0.0169582518%
OH2041	Wood County, Ohio	0.6017827347%
OH2042	Woodlawn Village, Ohio	0.0240822158%
OH2043	Woodmere Village, Ohio	0.0007072352%
OH2044	Woodsfield Village, Ohio	0.0011221301%
OH2045	Woodstock Village, Ohio	0.0001517571%
OH2046	Woodville Township, Ohio	0.0019622167%
OH2047	Woodville Village, Ohio	0.0034270973%
OH2048	Wooster City, Ohio	0.4046402646%
OH2049	Wooster Township, Ohio	0.0017358405%
OH2050	Worthington City, Ohio	0.0819890902%
OH2051	Worthington Township, Ohio	0.0017573559%
OH2052	Wren Village, Ohio	0.0008301349%
OH2053	Wyandot County, Ohio	0.0959147354%
OH2054	Wyoming City, Ohio	0.0220280462%
OH2055	Xenia City, Ohio	0.1268376308%
OH2056	Xenia Township, Ohio	0.0075532986%
OH2057	Yankee Lake Village, Ohio	0.0000341003%
OH2058	Yellow Creek Township, Ohio	0.0010782320%

State ID	Qualifying Subdivision	Consolidated State Allocation
OH2059	Yellow Springs Village, Ohio	0.0142295064%
OH2060	York Township, Athens County, Ohio	0.0005523599%
OH2061	York Township, Fulton County, Ohio	0.0061882726%
OH2062	York Township, Medina County, Ohio	0.0023145263%
OH2063	York Township, Sandusky County, Ohio	0.0006239306%
OH2064	York Township, Tuscarawas County, Ohio	0.0007784341%
OH2065	York Township, Van Wert County, Ohio	0.0001115107%
OH2066	Yorkshire Village, Ohio	0.0007627380%
OH2067	Yorkville Village, Ohio	0.0011795516%
OH2068	Youngstown City, Ohio	0.5751891038%
OH2069	Zaleski Village, Ohio	0.0000780271%
OH2070	Zane Township, Ohio	0.0012568985%
OH2071	Zanesfield Village, Ohio	0.0001257699%
OH2072	Zanesville City, Ohio	0.1371227251%
OH2073	Zoar Village, Ohio	0.0002364863%

State ID	Qualifying Subdivision	Consolidated State Allocation
OK1	Ada City, Oklahoma	0.8751127538%
OK2	Adair County, Oklahoma	0.4266209709%
OK3	Alfalfa County, Oklahoma	0.0752358760%
OK4	Altus City, Oklahoma	0.0622184471%
OK5	Anadarko City, Oklahoma	0.2177062552%
OK6	Ardmore City, Oklahoma	0.8834203994%
OK7	Atoka County, Oklahoma	0.3570166411%
OK8	Bartlesville City, Oklahoma	0.7616370548%
OK9	Beaver County, Oklahoma	0.0784743727%
OK10	Beckham County, Oklahoma	0.2846460130%
OK11	Bethany City, Oklahoma	0.2482441625%
OK12	Bixby City, Oklahoma	0.2557077913%
OK13	Blaine County, Oklahoma	0.1909298641%
OK14	Broken Arrow City, Oklahoma	1.9405732012%
OK15	Bryan County, Oklahoma	0.5253079080%
OK16	Burns Flat Town, Oklahoma	0.0297825750%
OK17	Caddo County, Oklahoma	0.4845736458%
OK18	Canadian County, Oklahoma	0.5808839408%
OK19	Carter County, Oklahoma	1.0204659663%
OK20	Cherokee County, Oklahoma	0.0547155245%
OK21	Chickasha City, Oklahoma	0.1510124411%
OK22	Choctaw City, Oklahoma	0.0613538158%
OK23	Choctaw County, Oklahoma	0.4004199348%
OK24	Cimarron County, Oklahoma	0.0722904419%
OK25	Claremore City, Oklahoma	0.7190775254%
OK26	Cleveland County, Oklahoma	0.2725422694%
OK27	Coal County, Oklahoma	0.1610866236%
OK28	Comanche County, Oklahoma	2.0790341012%
OK29	Cotton County, Oklahoma	0.1077265239%
OK30	Coweta City, Oklahoma	0.3910652406%
OK31	Craig County, Oklahoma	0.2892248732%
OK32	Creek County, Oklahoma	1.2474865281%
OK33	Custer County, Oklahoma	0.4049880250%
OK34	Del City, Oklahoma	0.2643825434%
OK35	Delaware County, Oklahoma	0.8410533842%
OK36	Dewey County, Oklahoma	0.0676712782%
OK37	Duncan City, Oklahoma	0.8937861298%
OK38	Durant City, Oklahoma	0.7336303563%
OK39	Edmond City, Oklahoma	1.4615935748%
OK40	El Reno City, Oklahoma	0.2053992273%
OK41	Elk City, Oklahoma	0.3587477547%
OK42	Ellis County, Oklahoma	0.0583375351%
OK43	Enid City, Oklahoma	0.7392412881%
OK44	Garfield County, Oklahoma	0.2542221165%
OK45	Garvin County, Oklahoma	0.8411004189%
OK46	Glenpool City, Oklahoma	0.1608895657%
OK47	Grady County, Oklahoma	1.0545977812%
OK48	Grant County, Oklahoma	0.0405478903%
OK49	Greer County, Oklahoma	0.1583252054%

State ID	Qualifying Subdivision	Consolidated State Allocation
OK50	Guthrie City, Oklahoma	0.1856265512%
OK51	Guymon City, Oklahoma	0.0547591936%
OK52	Harmon County, Oklahoma	0.0673861249%
OK53	Harper County, Oklahoma	0.0522026584%
OK54	Haskell County, Oklahoma	0.2531508354%
OK55	Hughes County, Oklahoma	0.2061436213%
OK56	Jackson County, Oklahoma	0.4801048418%
OK57	Jefferson County, Oklahoma	0.3090924602%
OK58	Jenks City, Oklahoma	0.1806228639%
OK59	Johnston County, Oklahoma	0.4472082986%
OK60	Kay County, Oklahoma	0.5067583031%
OK61	Kingfisher County, Oklahoma	0.2717757463%
OK62	Kiowa County, Oklahoma	0.2298382701%
OK63	Latimer County, Oklahoma	0.3148762172%
OK64	Lawton City, Oklahoma	0.3312681144%
OK65	Le Flore County, Oklahoma	1.4166392289%
OK66	Lincoln County, Oklahoma	0.6999457500%
OK67	Logan County, Oklahoma	0.5399784520%
OK68	Love County, Oklahoma	0.2288662752%
OK69	Major County, Oklahoma	0.0852741304%
OK70	Marshall County, Oklahoma	0.2609426135%
OK71	Mayes County, Oklahoma	1.2431623622%
OK72	McAlester City, Oklahoma	1.2318612380%
OK73	McClain County, Oklahoma	0.6643227071%
OK74	McCurtain County, Oklahoma	0.8951427325%
OK75	McIntosh County, Oklahoma	0.6473819592%
OK76	Miami City, Oklahoma	0.3080134381%
OK77	Midwest City, Oklahoma	1.3662006673%
OK78	Moore City, Oklahoma	0.2533704430%
OK79	Murray County, Oklahoma	0.5297956437%
OK80	Muskogee City, Oklahoma	2.5039385148%
OK81	Muskogee County, Oklahoma	0.1783839604%
OK82	Mustang City, Oklahoma	0.1655020823%
OK83	Newcastle City, Oklahoma	0.2606099206%
OK84	Noble County, Oklahoma	0.1688783176%
OK85	Norman City, Oklahoma	4.4189589851%
OK86	Nowata County, Oklahoma	0.1569775216%
OK87	Okfuskee County, Oklahoma	0.2609296558%
OK88	Oklahoma City, Oklahoma	14.3489114350%
OK89	Oklahoma County, Oklahoma	3.3422940072%
OK90	Okmulgee City, Oklahoma	0.5086746948%
OK91	Okmulgee County, Oklahoma	0.4742639531%
OK92	Osage County, Oklahoma	0.5896618496%
OK93	Ottawa County, Oklahoma	0.3159777890%
OK94	Owasso City, Oklahoma	0.7456266521%
OK95	Pawnee County, Oklahoma	0.6201145221%
OK96	Payne County, Oklahoma	0.6719554590%
OK97	Pittsburg County, Oklahoma	0.1253496540%
OK98	Ponca City, Oklahoma	0.4343605817%

State ID	Qualifying Subdivision	Consolidated State Allocation
OK99	Pontotoc County, Oklahoma	0.3451006157%
OK100	Pottawatomie County, Oklahoma	0.8536612997%
OK101	Pushmataha County, Oklahoma	0.3982344607%
OK102	Roger Mills County, Oklahoma	0.0439550052%
OK103	Rogers County, Oklahoma	1.2081401690%
OK104	Sand Springs City, Oklahoma	0.3849881687%
OK105	Sapulpa City, Oklahoma	1.1421081226%
OK106	Seminole City, Oklahoma	0.2214634802%
OK107	Seminole County, Oklahoma	0.4144393970%
OK108	Sequoyah County, Oklahoma	1.5345087624%
OK109	Shawnee City, Oklahoma	1.3614784311%
OK110	Stephens County, Oklahoma	0.8246887486%
OK111	Stillwater City, Oklahoma	0.8442351700%
OK112	Tahlequah City, Oklahoma	1.5329176592%
OK113	Texas County, Oklahoma	0.3711376613%
OK114	Tillman County, Oklahoma	0.1988848754%
OK115	Tulsa City, Oklahoma	11.8499277217%
OK116	Tulsa County, Oklahoma	5.3498014970%
OK117	Wagoner County, Oklahoma	0.8686244855%
OK118	Warr Acres City, Oklahoma	0.1616160377%
OK119	Washington County, Oklahoma	0.3936750370%
OK120	Washita County, Oklahoma	0.1931168527%
OK121	Weatherford City, Oklahoma	0.1872773945%
OK122	Woods County, Oklahoma	0.1975804400%
OK123	Woodward City, Oklahoma	0.2327716722%
OK124	Woodward County, Oklahoma	0.1781706634%
OK125	Yukon City, Oklahoma	0.3103071173%

State ID	Qualifying Subdivision	Consolidated State Allocation
OR1	Albany City, Oregon	1.1574421234%
OR2	Ashland City, Oregon	0.5725593238%
OR3	Astoria City, Oregon	0.1859283065%
OR4	Baker County, Oregon	0.4771636205%
OR5	Beaverton City, Oregon	0.9709676029%
OR6	Bend City, Oregon	0.9443519043%
OR7	Benton County, Oregon	1.0219885306%
OR8	Canby City, Oregon	0.1716812437%
OR9	Central Point City, Oregon	0.1718730043%
OR10	Clackamas County, Oregon	7.7713142577%
OR11	Clatsop County, Oregon	1.1423692099%
OR12	Columbia County, Oregon	1.0096699413%
OR13	Coos Bay City, Oregon	0.2538945929%
OR14	Coos County, Oregon	1.5633002470%
OR15	Cornelius City, Oregon	0.0949750265%
OR16	Corvallis City, Oregon	0.6633711425%
OR17	Cottage Grove City, Oregon	0.0910229575%
OR18	Crook County, Oregon	0.3513229911%
OR19	Curry County, Oregon	0.7612961295%
OR20	Dallas City, Oregon	0.1606964683%
OR21	Deschutes County, Oregon	2.2569753600%
OR22	Douglas County, Oregon	2.5689481047%
OR23	Eugene City, Oregon	2.7611039932%
OR24	Forest Grove City, Oregon	0.2522169415%
OR26	Gladstone City, Oregon	0.1181360032%
OR28	Grants Pass City, Oregon	0.8232581895%
OR29	Gresham City, Oregon	0.9831942718%
OR30	Happy Valley City, Oregon	0.0103506009%
OR32	Hermiston City, Oregon	0.1316304314%
OR33	Hillsboro City, Oregon	1.5083519364%
OR34	Hood River County, Oregon	0.3553687498%
OR35	Independence City, Oregon	0.0808970601%
OR36	Jackson County, Oregon	4.0769510640%
OR37	Jefferson County, Oregon	0.3674692915%
OR38	Josephine County, Oregon	1.6536523798%
OR39	Keizer City, Oregon	0.1916558451%
OR40	Klamath County, Oregon	1.2169628601%
OR41	Klamath Falls City, Oregon	0.3209275214%
OR42	La Grande City, Oregon	0.2715648669%
OR44	Lake Oswego City, Oregon	0.6934160342%
OR45	Lane County, Oregon	6.3326808234%
OR46	Lebanon City, Oregon	0.3269345282%
OR47	Lincoln County, Oregon	1.5190343268%
OR48	Linn County, Oregon	1.8185376689%
OR49	Malheur County, Oregon	0.5014027023%
OR50	Marion County, Oregon	4.1636475308%
OR51	McMinnville City, Oregon	0.4803592635%
OR52	Medford City, Oregon	1.5540758598%
OR53	Milwaukie City, Oregon	0.2113647118%

State ID	Qualifying Subdivision	Consolidated State Allocation
OR54	Monmouth City, Oregon	0.0706960930%
OR55	Morrow County, Oregon	0.1351544937%
OR56	Multnomah County, Oregon	13.9643815662%
OR57	Newberg City, Oregon	0.4093257361%
OR58	Newport City, Oregon	0.1908392623%
OR59	Ontario City, Oregon	0.1869780182%
OR60	Oregon City, Oregon	0.2765040475%
OR61	Pendleton City, Oregon	0.3521049458%
OR62	Polk County, Oregon	0.7074299681%
OR63	Portland City, Oregon	8.2736702858%
OR64	Prineville City, Oregon	0.0924861843%
OR65	Redmond City, Oregon	0.1550311086%
OR66	Roseburg City, Oregon	0.6370799877%
OR67	Salem City, Oregon	3.0438221421%
OR68	Sandy City, Oregon	0.0775015682%
OR70	Sherwood City, Oregon	0.1404204928%
OR71	Silverton City, Oregon	0.0775630731%
OR72	Springfield City, Oregon	1.1667234659%
OR73	St. Helens City, Oregon	0.1964453077%
OR74	The Dalles City, Oregon	0.1723418738%
OR75	Tigard City, Oregon	0.5049875956%
OR76	Tillamook County, Oregon	0.9001228870%
OR77	Troutdale City, Oregon	0.0899929610%
OR78	Tualatin City, Oregon	0.1551565618%
OR79	Umatilla County, Oregon	0.9738633884%
OR80	Union County, Oregon	0.4153841374%
OR82	Wasco County, Oregon	0.4116278731%
OR83	Washington County, Oregon	7.2167622210%
OR84	West Linn City, Oregon	0.1600504983%
OR86	Wilsonville City, Oregon	0.1383351396%
OR87	Woodburn City, Oregon	0.2069349266%
OR88	Yamhill County, Oregon	1.4120246444%

State ID	Qualifying Subdivision	Consolidated State Allocation
PA2	Adams County, Pennsylvania	
PA4	Aliquippa City, Pennsylvania	
PA5	Allegheny County, Pennsylvania	
PA6	Allentown City, Pennsylvania	
PA10	Armstrong County, Pennsylvania	
PA13	Beaver County, Pennsylvania	
PA14	Bedford County, Pennsylvania	
PA15	Bensalem Township, Pennsylvania	
PA16	Berks County, Pennsylvania	
PA20	Blair County, Pennsylvania	
PA22	Bradford County, Pennsylvania	
PA23	Bristol Township, Pennsylvania	
PA25	Bucks County, Pennsylvania	
PA27	Butler County, Pennsylvania	
PA30	Cambria County, Pennsylvania	
PA31	Cameron County, Pennsylvania	
PA32	Carbon County, Pennsylvania	
PA36	Centre County, Pennsylvania	
PA40	Chester County, Pennsylvania	
PA42	Clarion County, Pennsylvania	
PA43	Clearfield County, Pennsylvania	
PA44	Clinton County, Pennsylvania	
PA46	Coatesville City, Pennsylvania	Allocations in Pennsylvania will be made in accordance with the Pennsylvania Trust and Allocation Order.
PA49	Columbia County, Pennsylvania	
PA53	Crawford County, Pennsylvania	
PA54	Cumberland County, Pennsylvania	
PA57	Dauphin County, Pennsylvania	
PA58	Delaware County, Pennsylvania	
PA76	Edwardsville Borough, Pennsylvania	
PA79	Elk County, Pennsylvania	
PA84	Erie County, Pennsylvania	
PA85	Exeter Borough, Pennsylvania	
PA90	Fayette County, Pennsylvania	
PA92	Forest County, Pennsylvania	
PA94	Forty Fort Borough, Pennsylvania	
PA96	Franklin County, Pennsylvania	
PA98	Fulton County, Pennsylvania	
PA99	Greene County, Pennsylvania	
PA107	Hanover Township, Luzerne County, Pennsylvania	
PA114	Hazleton City, Pennsylvania	
PA120	Huntingdon County, Pennsylvania	
PA122	Indiana County, Pennsylvania	
PA123	Jefferson County, Pennsylvania	
PA126	Juniata County, Pennsylvania	
PA127	Kingston Borough, Pennsylvania	
PA128	Lackawanna County, Pennsylvania	
PA130	Lancaster County, Pennsylvania	

State ID	Qualifying Subdivision	Consolidated State Allocation
PA134	Lawrence County, Pennsylvania	
PA136	Lebanon County, Pennsylvania	
PA137	Lehigh County, Pennsylvania	
PA141	Lock Haven City, Pennsylvania	
PA147	Lower Makefield Township, Pennsylvania	
PA155	Lower Southampton Township, Pennsylvania	
PA157	Luzerne County, Pennsylvania	
PA158	Lycoming County, Pennsylvania	
PA348	Mahoning Township, Lawrence County, Pennsylvania	
PA164	McKean County, Pennsylvania	
PA167	Mercer County, Pennsylvania	
PA169	Middletown Township, Bucks County, Pennsylvania	
PA171	Mifflin County, Pennsylvania	
PA174	Monroe County, Pennsylvania	
PA176	Montgomery County, Pennsylvania	
PA178	Montour County, Pennsylvania	
PA180	Morrisville Borough, Pennsylvania	
PA187	Nanticoke City, Pennsylvania	Allocations in Pennsylvania will be made in accordance with the Pennsylvania Trust and Allocation Order.
PA190	New Castle City, Pennsylvania	
PA195	Newtown Township, Bucks County, Pennsylvania	
PA197	Norristown Borough, Pennsylvania	
PA205	Northampton County, Pennsylvania	
PA207	Northumberland County, Pennsylvania	
PA213	Perry County, Pennsylvania	
PA215	Philadelphia City, Pennsylvania	
PA217	Pike County, Pennsylvania	
PA219	Pittsburgh City, Pennsylvania	
PA220	Plains Township, Pennsylvania	
PA225	Potter County, Pennsylvania	
PA241	Schuylkill County, Pennsylvania	
PA248	Snyder County, Pennsylvania	
PA249	Somerset County, Pennsylvania	
PA265	Sugar Notch Borough, Pennsylvania	
PA266	Sullivan County, Pennsylvania	
PA267	Susquehanna County, Pennsylvania	
PA270	Tioga County, Pennsylvania	
PA273	Union County, Pennsylvania	

State ID	Qualifying Subdivision	Consolidated State Allocation
PA349	Union Township, Lawrence County, Pennsylvania	
PA290	Venango County, Pennsylvania	
PA350	Wampum Borough, Pennsylvania	
PA291	Warminster Township, Pennsylvania	
PA292	Warren County, Pennsylvania	
PA293	Warrington Township, Bucks County, Pennsylvania	
PA297	Washington County, Pennsylvania	
PA299	Wayne County, Pennsylvania	
PA310	West Norriton Township, Pennsylvania	
PA311	West Pittston Borough, Pennsylvania	
PA313	Westmoreland County, Pennsylvania	
PA320	Wilkes Barre Township, Pennsylvania	
PA321	Wilkes-Barre City, Pennsylvania	
PA327	Wright Township, Pennsylvania	
PA328	Wyoming Borough, Pennsylvania	
PA329	Wyoming County, Pennsylvania	
PA333	York County, Pennsylvania	
PA335	Fairview Township, Luzerne County, Pennsylvania	Allocations in Pennsylvania will be made in accordance with the Pennsylvania Trust and Allocation Order.
PA336	District Attorney of Allegheny County, Pennsylvania	
PA337	District Attorney of Berks County, Pennsylvania	
PA338	District Attorney of Bucks County, Pennsylvania	
PA339	District Attorney of Chester County, Pennsylvania	
PA340	District Attorney of Clearfield County, Pennsylvania	
PA341	District Attorney of Dauphin County, Pennsylvania	
PA342	District Attorney of Delaware County, Pennsylvania	
PA343	District Attorney of Erie County, Pennsylvania	
PA344	District Attorney of Lehigh County, Pennsylvania	
PA345	District Attorney of Northampton County, Pennsylvania	
PA346	District Attorney of Philadelphia County, Pennsylvania	

State ID	Qualifying Subdivision	Consolidated State Allocation
PA347	District Attorney of Westmoreland County, Pennsylvania	Allocations in Pennsylvania will be made in accordance with the Pennsylvania Trust and Allocation Order.
PA351	Southeastern Pennsylvania Transportation Authority, Pennsylvania	

State ID	Qualifying Subdivision	Consolidated State Allocation
PR1	Adjuntas, Puerto Rico	0.4468461493%
PR2	Aguada, Puerto Rico	0.9238661758%
PR3	Aguadilla, Puerto Rico	1.6156167759%
PR4	Aguas Buenas, Puerto Rico	0.7490858028%
PR5	Aibonito, Puerto Rico	0.7959428477%
PR6	Anasco, Puerto Rico	0.5050154853%
PR7	Arecibo, Puerto Rico	1.3074850692%
PR8	Arroyo, Puerto Rico	2.0592191012%
PR9	Barceloneta, Puerto Rico	0.5768569406%
PR10	Barranquitas, Puerto Rico	0.7167107056%
PR11	Bayamon, Puerto Rico	5.7282390971%
PR12	Cabo Rojo, Puerto Rico	1.1570847420%
PR13	Caguas, Puerto Rico	4.7119895861%
PR14	Camuy, Puerto Rico	0.7759381807%
PR15	Canovanas, Puerto Rico	1.0721780377%
PR16	Carolina, Puerto Rico	4.3228006165%
PR17	Catano, Puerto Rico	0.7612066695%
PR18	Cayey, Puerto Rico	1.3596493469%
PR19	Ceiba, Puerto Rico	0.2896687707%
PR20	Ciales, Puerto Rico	0.4533215195%
PR21	Cidra, Puerto Rico	1.1671492158%
PR22	Coamo, Puerto Rico	0.9970822347%
PR23	Comerio, Puerto Rico	0.5268640655%
PR24	Corozal, Puerto Rico	0.8595048594%
PR25	Culebra, Puerto Rico	0.0380175870%
PR26	Dorado, Puerto Rico	0.8970759382%
PR27	Fajardo, Puerto Rico	1.1102770585%
PR28	Florida, Puerto Rico	0.2695408253%
PR29	Guanica, Puerto Rico	0.4269617539%
PR30	Guayama, Puerto Rico	1.3293151076%
PR31	Guayanilla, Puerto Rico	0.4886780984%
PR32	Guaynabo, Puerto Rico	2.3185934725%
PR33	Gurabo, Puerto Rico	0.9866291335%
PR34	Hatillo, Puerto Rico	1.0577790273%
PR35	Hormigueros, Puerto Rico	0.3963005262%
PR36	Humacao, Puerto Rico	1.8829438530%
PR37	Isabela, Puerto Rico	1.0062900243%
PR38	Jayuya, Puerto Rico	0.3757431113%
PR39	Juana Diaz, Puerto Rico	1.7179648597%
PR40	Juncos, Puerto Rico	0.9543672919%
PR41	Lajas, Puerto Rico	0.5633742491%
PR42	Lares, Puerto Rico	0.6852103333%
PR43	Las Marias, Puerto Rico	0.2285582941%
PR44	Las Piedras, Puerto Rico	0.8440153869%
PR45	Loiza, Puerto Rico	0.7971240145%
PR46	Luquillo, Puerto Rico	0.5035020683%
PR47	Manati, Puerto Rico	1.3858134207%
PR48	Maricao, Puerto Rico	0.1311593846%
PR49	Maunabo, Puerto Rico	0.2983734242%

State ID	Qualifying Subdivision	Consolidated State Allocation
PR50	Mayaguez, Puerto Rico	2.7384221211%
PR51	Moca, Puerto Rico	0.9400143856%
PR52	Morovis, Puerto Rico	0.7678286207%
PR53	Naguabo, Puerto Rico	0.6776685553%
PR54	Naranjito, Puerto Rico	0.6713715879%
PR55	Orocovis, Puerto Rico	0.5209419444%
PR56	Patillas, Puerto Rico	0.4307397840%
PR57	Penuelas, Puerto Rico	0.5782731381%
PR58	Ponce, Puerto Rico	5.1762853836%
PR59	Quebradillas, Puerto Rico	0.6086201563%
PR60	Rincon, Puerto Rico	0.3607312171%
PR61	Rio Grande, Puerto Rico	1.2995118170%
PR62	Sabana Grande, Puerto Rico	0.5625075422%
PR63	Salinas, Puerto Rico	0.8069301551%
PR64	San German, Puerto Rico	0.9914753253%
PR65	San Juan, Puerto Rico	13.8003700360%
PR66	San Lorenzo, Puerto Rico	1.0322446251%
PR67	San Sebastian, Puerto Rico	0.9222442638%
PR68	Santa Isabel, Puerto Rico	0.5210354055%
PR69	Toa Alta, Puerto Rico	1.7552873773%
PR70	Toa Baja, Puerto Rico	2.1783919223%
PR71	Trujillo Alto, Puerto Rico	1.9136501824%
PR72	Utuado, Puerto Rico	0.7718304061%
PR73	Vega Alta, Puerto Rico	0.9338331796%
PR74	Vega Baja, Puerto Rico	1.6886509241%
PR75	Vieques, Puerto Rico	0.1979351524%
PR76	Villalba, Puerto Rico	0.5576736281%
PR77	Yabucoa, Puerto Rico	0.8842993409%
PR78	Yauco, Puerto Rico	1.1383015829%

State ID	Qualifying Subdivision	Consolidated State Allocation
RI1	Barrington Town, Rhode Island	2.3000539202%
RI2	Bristol Town, Rhode Island	1.0821868960%
RI3	Burrillville Town, Rhode Island	1.3272036109%
RI4	Central Falls City, Rhode Island	0.9147584689%
RI5	Charlestown, Rhode Island	0.5887860100%
RI6	Coventry Town, Rhode Island	3.5886939036%
RI7	Cranston City, Rhode Island	7.8869595262%
RI8	Cumberland Town, Rhode Island	2.4742003754%
RI9	East Greenwich Town, Rhode Island	1.7467671439%
RI10	East Providence City, Rhode Island	4.3247728580%
RI11	Exeter Town, Rhode Island	0.0071810640%
RI12	Foster Town, Rhode Island	0.2489021533%
RI13	Glocester Town, Rhode Island	0.8508469130%
RI14	Hopkinton Town, Rhode Island	0.7098006614%
RI15	Jamestown, Rhode Island	0.4220295287%
RI16	Johnston Town, Rhode Island	3.0898685140%
RI17	Lincoln Town, Rhode Island	2.1171973520%
RI18	Little Compton Town, Rhode Island	0.2663017745%
RI19	Middletown, Rhode Island	1.2877439601%
RI20	Narragansett Town, Rhode Island	1.2760123800%
RI21	New Shoreham Town, Rhode Island	0.2118269375%
RI22	Newport City, Rhode Island	2.3339316695%
RI23	North Kingstown, Rhode Island	2.6500524514%
RI24	North Providence Town, Rhode Island	2.5306229398%
RI25	North Smithfield Town, Rhode Island	1.1299013506%
RI26	Pawtucket City, Rhode Island	5.9652217345%
RI27	Portsmouth Town, Rhode Island	1.2807429020%
RI28	Providence City, Rhode Island	21.4858080262%
RI29	Richmond Town, Rhode Island	0.0818789542%
RI30	Scituate Town, Rhode Island	1.0248588645%
RI31	Smithfield Town, Rhode Island	1.7724673574%
RI32	South Kingstown, Rhode Island	2.3282747894%
RI33	Tiverton Town, Rhode Island	0.9907730639%
RI34	Warren Town, Rhode Island	0.1394116029%
RI35	Warwick City, Rhode Island	9.9418184427%
RI36	West Greenwich Town, Rhode Island	0.7104734659%
RI37	West Warwick Town, Rhode Island	3.0239943495%
RI38	Westerly Town, Rhode Island	2.0135754535%
RI39	Woonsocket City, Rhode Island	3.8740986306%

State ID	Qualifying Subdivision	Consolidated State Allocation
SC1	Abbeville County, South Carolina	0.3350059823%
SC2	Aiken City, South Carolina	0.7838026892%
SC3	Aiken County, South Carolina	2.5661670597%
SC4	Allendale County, South Carolina	0.1220441823%
SC5	Anderson City, South Carolina	1.1735303052%
SC6	Anderson County, South Carolina	3.3392231904%
SC7	Bamberg County, South Carolina	0.2705913372%
SC8	Barnwell County, South Carolina	0.4653224769%
SC9	Beaufort City, South Carolina	0.0769982478%
SC10	Beaufort County, South Carolina	2.3364418352%
SC11	Berkeley County, South Carolina	2.0961440294%
SC12	Bluffton Town, South Carolina	0.0481968917%
SC13	Calhoun County, South Carolina	0.1833260393%
SC14	Cayce City, South Carolina	0.2572136960%
SC15	Charleston City, South Carolina	2.3004340552%
SC16	Charleston County, South Carolina	3.8016438488%
SC17	Cherokee County, South Carolina	0.9440700745%
SC18	Chester City, South Carolina	0.1299573133%
SC19	Chester County, South Carolina	0.3947965211%
SC20	Chesterfield County, South Carolina	0.9443488664%
SC21	Clarendon County, South Carolina	0.5705383575%
SC22	Clemson City, South Carolina	0.3311616877%
SC23	Colleton County, South Carolina	0.8589365535%
SC24	Columbia City, South Carolina	2.3918060702%
SC25	Conway City, South Carolina	0.2894739402%
SC26	Darlington County, South Carolina	1.6906462867%
SC27	Dillon County, South Carolina	0.6608411417%
SC28	Dorchester County, South Carolina	1.6015765975%
SC29	Easley City, South Carolina	0.8565835771%
SC30	Edgefield County, South Carolina	0.3586097074%
SC31	Fairfield County, South Carolina	0.3536421891%
SC32	Florence City, South Carolina	1.0065336904%
SC33	Florence County, South Carolina	2.2059006272%
SC34	Forest Acres City, South Carolina	0.0995929056%
SC35	Fort Mill Town, South Carolina	0.1714974802%
SC36	Fountain Inn City, South Carolina	0.1975697094%
SC37	Gaffney City, South Carolina	0.2044353782%
SC38	Georgetown City, South Carolina	0.2626233562%
SC39	Georgetown County, South Carolina	1.1895098900%
SC40	Goose Creek City, South Carolina	0.5473575768%
SC41	Greenville City, South Carolina	2.2705648395%
SC42	Greenville County, South Carolina	7.1502328364%
SC43	Greenwood City, South Carolina	0.0308220618%
SC44	Greenwood County, South Carolina	1.3388944490%
SC45	Greer City, South Carolina	0.5590564672%

State ID	Qualifying Subdivision	Consolidated State Allocation
SC46	Hampton County, South Carolina	0.3450376919%
SC47	Hanahan City, South Carolina	0.2279684840%
SC48	Hilton Head Island Town, South Carolina	0.2323878458%
SC49	Horry County, South Carolina	5.2166718879%
SC50	Irmo Town, South Carolina	0.0942740906%
SC51	James Island Town, South Carolina	0.0461551887%
SC52	Jasper County, South Carolina	0.4278548317%
SC53	Kershaw County, South Carolina	1.0780892823%
SC54	Lancaster County, South Carolina	1.4809282603%
SC55	Laurens County, South Carolina	1.3598442946%
SC56	Lee County, South Carolina	0.2176621820%
SC57	Lexington County, South Carolina	4.4881391605%
SC58	Lexington Town, South Carolina	0.2342104062%
SC59	Marion County, South Carolina	0.6973242307%
SC60	Marlboro County, South Carolina	0.4878238042%
SC61	Mauldin City, South Carolina	0.4253253929%
SC62	McCormick County, South Carolina	0.1281623493%
SC63	Moncks Corner Town, South Carolina	0.1965426445%
SC64	Mount Pleasant Town, South Carolina	0.5750801889%
SC65	Myrtle Beach City, South Carolina	1.9068234068%
SC66	Newberry City, South Carolina	0.0344864657%
SC67	Newberry County, South Carolina	0.5656551710%
SC68	North Augusta City, South Carolina	0.5139678525%
SC69	North Charleston City, South Carolina	1.7751090959%
SC70	North Myrtle Beach City, South Carolina	0.6366313248%
SC71	Oconee County, South Carolina	2.8099515214%
SC72	Orangeburg City, South Carolina	0.0468940344%
SC73	Orangeburg County, South Carolina	1.4543982912%
SC74	Pickens County, South Carolina	2.8143347165%
SC75	Port Royal Town, South Carolina	0.0206098617%
SC76	Richland County, South Carolina	3.8816723839%
SC77	Rock Hill City, South Carolina	1.3120073555%
SC78	Saluda County, South Carolina	0.2604801809%
SC79	Simpsonville City, South Carolina	0.3497064495%
SC80	Spartanburg City, South Carolina	1.1890308958%
SC81	Spartanburg County, South Carolina	6.4084293395%
SC82	Summerville Town, South Carolina	0.6446011912%
SC83	Sumter City, South Carolina	0.5390642671%

State ID	Qualifying Subdivision	Consolidated State Allocation
SC84	Sumter County, South Carolina	0.9480995733%
SC85	Tega Cay City, South Carolina	0.0433365022%
SC86	Union County, South Carolina	0.6499524020%
SC87	West Columbia City, South Carolina	0.3943858322%
SC88	Williamsburg County, South Carolina	0.4931357629%
SC89	York County, South Carolina	2.5800878865%

State ID	Qualifying Subdivision	Consolidated State Allocation
SD1	Aberdeen City, South Dakota	1.7806789284%
SD2	Aurora County, South Dakota	0.1283252150%
SD3	Beadle County, South Dakota	0.8743032704%
SD4	Bennett County, South Dakota	0.1895703332%
SD5	Bon Homme County, South Dakota	0.6047162426%
SD6	Box Elder City, South Dakota	0.2251076107%
SD7	Brandon City, South Dakota	0.4012895918%
SD8	Brookings City, South Dakota	2.4259611863%
SD9	Brookings County, South Dakota	0.2802421588%
SD10	Brown County, South Dakota	1.7764564315%
SD11	Brule County, South Dakota	0.8045710091%
SD12	Buffalo County, South Dakota	0.1823519926%
SD13	Butte County, South Dakota	0.8926544344%
SD14	Campbell County, South Dakota	0.0682419048%
SD15	Charles Mix County, South Dakota	0.8084433424%
SD16	Clark County, South Dakota	0.2550260601%
SD17	Clay County, South Dakota	0.4415194932%
SD18	Codington County, South Dakota	0.8721266365%
SD19	Corson County, South Dakota	0.3429322421%
SD20	Custer County, South Dakota	1.0868471426%
SD21	Davison County, South Dakota	0.6815458005%
SD22	Day County, South Dakota	0.3921680475%
SD23	Deuel County, South Dakota	0.4035008098%
SD24	Dewey County, South Dakota	0.3699996685%
SD25	Douglas County, South Dakota	0.2891518759%
SD26	Edmunds County, South Dakota	0.2529348056%
SD27	Fall River County, South Dakota	2.1968904590%
SD28	Faulk County, South Dakota	0.2772473959%
SD29	Grant County, South Dakota	0.6923230564%
SD30	Gregory County, South Dakota	0.5555128599%
SD31	Haakon County, South Dakota	0.1774497029%
SD32	Hamlin County, South Dakota	0.3340117176%
SD33	Hand County, South Dakota	0.2401311401%
SD34	Hanson County, South Dakota	0.1484271966%
SD35	Harding County, South Dakota	0.0620805393%
SD36	Hughes County, South Dakota	0.8137066032%
SD37	Huron City, South Dakota	0.8308959590%
SD38	Hutchinson County, South Dakota	0.5659237410%
SD39	Hyde County, South Dakota	0.0640529112%
SD40	Jackson County, South Dakota	0.1437421380%
SD41	Jerauld County, South Dakota	0.3258250234%
SD42	Jones County, South Dakota	0.0451732597%
SD43	Kingsbury County, South Dakota	0.3721763025%
SD44	Lake County, South Dakota	0.8273932428%
SD45	Lawrence County, South Dakota	2.3838237581%
SD46	Lincoln County, South Dakota	1.2611723923%
SD47	Lyman County, South Dakota	0.3239942300%

State ID	Qualifying Subdivision	Consolidated State Allocation
SD48	Marshall County, South Dakota	0.5625107271%
SD49	McCook County, South Dakota	0.3047773840%
SD50	McPherson County, South Dakota	0.1613184030%
SD51	Meade County, South Dakota	3.2698326502%
SD52	Mellette County, South Dakota	0.1848247525%
SD53	Miner County, South Dakota	0.1616739703%
SD54	Minnehaha County, South Dakota	12.2243522517%
SD55	Mitchell City, South Dakota	1.5031732329%
SD56	Moody County, South Dakota	0.4743937985%
SD57	Oglala Lakota County, South Dakota	1.3919692864%
SD58	Pennington County, South Dakota	8.0611767283%
SD59	Perkins County, South Dakota	0.3755374403%
SD60	Pierre City, South Dakota	0.6216678331%
SD61	Potter County, South Dakota	0.1893444561%
SD62	Rapid City, South Dakota	6.9492723574%
SD63	Roberts County, South Dakota	0.9943780269%
SD64	Sanborn County, South Dakota	0.1141857404%
SD65	Sioux Falls City, South Dakota	21.6732660428%
SD66	Spearfish City, South Dakota	0.8208633410%
SD67	Spink County, South Dakota	0.7324773052%
SD68	Stanley County, South Dakota	0.1733882380%
SD69	Sully County, South Dakota	0.0632218131%
SD70	Todd County, South Dakota	1.0677859248%
SD71	Tripp County, South Dakota	0.6252580903%
SD72	Turner County, South Dakota	0.6536969906%
SD73	Union County, South Dakota	1.4531041680%
SD74	Vermillion City, South Dakota	0.5912781760%
SD75	Walworth County, South Dakota	0.5615110318%
SD76	Watertown City, South Dakota	1.6132964277%
SD77	Yankton City, South Dakota	1.2219897393%
SD78	Yankton County, South Dakota	1.4233435084%
SD79	Ziebach County, South Dakota	0.3085103004%

State ID	Qualifying Subdivision	Consolidated State Allocation
TN3	Anderson County, Tennessee	1.2063249026%
TN5	Arlington Town, Tennessee	0.0036566309%
TN8	Bartlett City, Tennessee	0.0730561566%
TN10	Bedford County, Tennessee	0.5762663555%
TN12	Benton County, Tennessee	0.5216608068%
TN13	Bledsoe County, Tennessee	0.1398580820%
TN14	Blount County, Tennessee	1.9196465581%
TN15	Bradley County, Tennessee	1.0430217552%
TN16	Brentwood City, Tennessee	0.0478208600%
TN17	Bristol City, Tennessee	0.5426871150%
TN19	Campbell County, Tennessee	1.5974370559%
TN20	Cannon County, Tennessee	0.3205453949%
TN21	Carroll County, Tennessee	0.4438060785%
TN22	Carter County, Tennessee	0.8435596891%
TN27	Chattanooga City, Tennessee	0.4981237028%
TN28	Cheatham County, Tennessee	0.8209998781%
TN29	Chester County, Tennessee	0.1751399118%
TN30	Claiborne County, Tennessee	1.1929412357%
TN31	Clarksville City, Tennessee	0.2296815192%
TN32	Clay County, Tennessee	0.3261509170%
TN33	Cleveland City, Tennessee	0.5531282252%
TN36	Cocke County, Tennessee	0.8746257470%
TN37	Coffee County, Tennessee	0.8953551698%
TN39	Collierville Town, Tennessee	0.0617375387%
TN41	Columbia City, Tennessee	0.0390894158%
TN42	Cookeville City, Tennessee	0.8404101920%
TN45	Crockett County, Tennessee	0.1232062476%
TN47	Cumberland County, Tennessee	0.8784847959%
TN48	Dandridge Town, Tennessee	0.0109089663%
TN49	De Kalb County, Tennessee	0.4478425886%
TN50	Decatur County, Tennessee	0.3607195939%
TN51	Decatur Town, Tennessee	0.0050599481%
TN53	Dickson County, Tennessee	0.8341347308%
TN56	Dyer County, Tennessee	0.4019088559%
TN64	Fayette County, Tennessee	0.3157083831%
TN66	Fentress County, Tennessee	0.5526714656%
TN67	Franklin City, Tennessee	0.1089989646%
TN68	Franklin County, Tennessee	0.6323371108%
TN69	Gallatin City, Tennessee	0.0760079674%
TN70	Gatlinburg City, Tennessee	0.0507819668%
TN71	Germantown City, Tennessee	0.0687501047%
TN72	Gibson County, Tennessee	0.4940695219%
TN73	Giles County, Tennessee	0.4604367666%
TN75	Grainger County, Tennessee	0.4671260668%
TN76	Greene County, Tennessee	1.2127967101%
TN78	Grundy County, Tennessee	0.3896858892%
TN79	Hamblen County, Tennessee	2.2614488604%
TN80	Hamilton County, Tennessee	4.2055530346%
TN81	Hancock County, Tennessee	0.2089065376%

State ID	Qualifying Subdivision	Consolidated State Allocation
TN82	Hardeman County, Tennessee	0.2150658408%
TN83	Hardin County, Tennessee	0.5683946644%
TN84	Hartsville/Trousdale County, Tennessee	0.1139641522%
TN85	Hawkins County, Tennessee	1.0968095083%
TN86	Haywood County, Tennessee	0.1104263592%
TN87	Henderson County, Tennessee	0.2498867656%
TN88	Hendersonville City, Tennessee	0.1137407554%
TN89	Henry County, Tennessee	0.6661685991%
TN90	Hickman County, Tennessee	0.2804089244%
TN91	Houston County, Tennessee	0.1198735525%
TN92	Humphreys County, Tennessee	0.2441608982%
TN93	Jackson City, Tennessee	0.0431370644%
TN94	Jackson County, Tennessee	0.2780985367%
TN95	Jefferson County, Tennessee	0.8912247367%
TN96	Johnson City, Tennessee	1.0682855260%
TN97	Johnson County, Tennessee	0.2282065978%
TN98	Kingsport City, Tennessee	0.9871149359%
TN99	Knox County, Tennessee	9.1809198144%
TN100	Knoxville City, Tennessee	1.5417816888%
TN101	La Vergne City, Tennessee	0.0518950147%
TN102	Lake County, Tennessee	0.0671464632%
TN104	Lauderdale County, Tennessee	0.2733775153%
TN105	Lawrence County, Tennessee	0.6992850503%
TN107	Lebanon City, Tennessee	0.1110258247%
TN108	Lewis County, Tennessee	0.1528225920%
TN110	Lexington City, Tennessee	0.0796867496%
TN112	Lincoln County, Tennessee	0.4060784411%
TN115	Loudon County, Tennessee	0.8992484296%
TN116	Lynchburg, Moore County Metropolitan Government, Tennessee	0.0579106070%
TN118	Macon County, Tennessee	0.3091017000%
TN119	Madison County, Tennessee	0.8907256845%
TN121	Marion County, Tennessee	0.3637161259%
TN122	Marshall County, Tennessee	0.5422227344%
TN124	Maryville City, Tennessee	0.3223901040%
TN125	Maury County, Tennessee	1.0772540178%
TN126	McMinn County, Tennessee	0.9297273747%
TN128	McNairy County, Tennessee	0.4269884656%
TN129	Meigs County, Tennessee	0.2016450737%
TN130	Memphis City, Tennessee	4.9079216307%
TN131	Millington City, Tennessee	0.0212200583%
TN133	Monroe County, Tennessee	0.7506735593%
TN135	Montgomery County, Tennessee	1.6758545682%
TN136	Morgan County, Tennessee	0.5132562715%
TN138	Morristown City, Tennessee	0.3919462797%
TN139	Mount Juliet City, Tennessee	0.0577622481%
TN141	Murfreesboro City, Tennessee	0.7283549414%

State ID	Qualifying Subdivision	Consolidated State Allocation
TN142	Nashville-Davidson Metropolitan Government, Tennessee	8.9810236006%
TN145	Oak Ridge City, Tennessee	0.9598050011%
TN146	Obion County, Tennessee	0.3198033491%
TN147	Overton County, Tennessee	0.5461670803%
TN149	Perry County, Tennessee	0.0857864664%
TN151	Pickett County, Tennessee	0.1471132648%
TN152	Pigeon Forge City, Tennessee	0.0877322588%
TN154	Polk County, Tennessee	0.3220131560%
TN157	Putnam County, Tennessee	0.3930896023%
TN159	Rhea County, Tennessee	0.5404420504%
TN160	Ripley City, Tennessee	0.0190759934%
TN161	Roane County, Tennessee	1.6361535854%
TN162	Robertson County, Tennessee	0.9333043197%
TN163	Rutherford County, Tennessee	2.5756978154%
TN164	Scott County, Tennessee	0.5189341096%
TN165	Sequatchie County, Tennessee	0.2433974548%
TN166	Sevier County, Tennessee	1.4412782095%
TN168	Shelby County, Tennessee	3.5255489082%
TN170	Smith County, Tennessee	0.5711842980%
TN172	Smyrna Town, Tennessee	0.1314691656%
TN176	Spring Hill City, Tennessee	0.0244598773%
TN179	Stewart County, Tennessee	0.1459273147%
TN180	Sullivan County, Tennessee	1.4573397906%
TN181	Sumner County, Tennessee	1.7449087187%
TN182	Tipton County, Tennessee	0.6312749815%
TN184	Unicoi County, Tennessee	0.3464527663%
TN186	Union County, Tennessee	0.5606745148%
TN187	Van Buren County, Tennessee	0.0479172535%
TN189	Warren County, Tennessee	0.5719112694%
TN191	Washington County, Tennessee	1.1061046159%
TN192	Wayne County, Tennessee	0.2328717594%
TN194	Weakley County, Tennessee	0.3874777573%
TN195	White County, Tennessee	0.4162394991%
TN197	Williamson County, Tennessee	1.6843304984%
TN198	Wilson County, Tennessee	1.4019072760%

State ID	Qualifying Subdivision	Consolidated State Allocation
TX1	Abbott City, Texas	0.0004586670%
TX2	Abernathy City, Texas	0.0000733330%
TX3	Abilene City, Texas	0.3758786670%
TX4	Ackerly City, Texas	0.0000140000%
TX5	Addison Town, Texas	0.0387293330%
TX6	Adrian City, Texas	0.0001206670%
TX7	Agua Dulce City, Texas	0.0000286670%
TX8	Alamo City, Texas	0.0147473330%
TX9	Alamo Heights City, Texas	0.0187986670%
TX10	Alba Town, Texas	0.0021306670%
TX11	Albany City, Texas	0.0001200000%
TX12	Aledo City, Texas	0.0002206670%
TX13	Alice City, Texas	0.0475273330%
TX14	Allen City, Texas	0.2100540000%
TX15	Alma Town, Texas	0.0007380000%
TX16	Alpine City, Texas	0.0197906670%
TX17	Alto Town, Texas	0.0025113330%
TX18	Alton City, Texas	0.0076933330%
TX19	Alvarado City, Texas	0.0193526670%
TX20	Alvin City, Texas	0.0759746670%
TX21	Alvord Town, Texas	0.0002386670%
TX22	Amarillo City, Texas	0.6584406670%
TX23	Ames City, Texas	0.0037140000%
TX24	Amherst City, Texas	0.0000146670%
TX25	Anahuac City, Texas	0.0003613330%
TX26	Anderson City, Texas	0.0000126670%
TX27	Anderson County, Texas	0.1791753330%
TX28	Andrews City, Texas	0.0126553330%
TX29	Andrews County, Texas	0.0250706670%
TX30	Angelina County, Texas	0.1533040000%
TX31	Angleton City, Texas	0.0418606670%
TX32	Angus City, Texas	0.0002206670%
TX33	Anna City, Texas	0.0060500000%
TX34	Annetta North Town, Texas	0.0000226670%
TX35	Annetta South Town, Texas	0.0004013330%
TX36	Annetta Town, Texas	0.0039706670%
TX37	Annona Town, Texas	0.0004920000%
TX38	Anson City, Texas	0.0034226670%
TX39	Anthony Town, Texas	0.0030093330%
TX40	Anton City, Texas	0.0002960000%
TX41	Appleby City, Texas	0.0010340000%
TX42	Aquilla City, Texas	0.0001386670%
TX43	Aransas County, Texas	0.1776746670%
TX44	Aransas Pass City, Texas	0.0385420000%
TX45	Archer City, Texas	0.0070360000%
TX46	Archer County, Texas	0.0303560000%
TX47	Arcola City, Texas	0.0048600000%
TX48	Argyle City, Texas	0.0076040000%
TX49	Arlington City, Texas	0.4905353330%

State ID	Qualifying Subdivision	Consolidated State Allocation
TX50	Armstrong County, Texas	0.0006493330%
TX51	Arp City, Texas	0.0013393330%
TX52	Asherton City, Texas	0.0000746670%
TX53	Aspermont Town, Texas	0.0000060000%
TX54	Atascosa County, Texas	0.1179353330%
TX55	Athens City, Texas	0.0706280000%
TX56	Atlanta City, Texas	0.0206633330%
TX57	Aubrey City, Texas	0.0100940000%
TX58	Aurora City, Texas	0.0012326670%
TX59	Austin City, Texas	3.2518106670%
TX60	Austin County, Texas	0.0506866670%
TX61	Austwell City, Texas	0.0000726670%
TX62	Avery Town, Texas	0.0000920000%
TX63	Avinger Town, Texas	0.0007433330%
TX64	Azle City, Texas	0.0214753330%
TX65	Bailey City, Texas	0.0006333330%
TX66	Bailey County, Texas	0.0102513330%
TX67	Bailey's Prairie Village, Texas	0.0037360000%
TX68	Baird City, Texas	0.0018680000%
TX69	Balch Springs City, Texas	0.0182386670%
TX70	Balcones Heights City, Texas	0.0158740000%
TX71	Ballinger City, Texas	0.0061146670%
TX72	Balmorhea City, Texas	0.0000420000%
TX73	Bandera City, Texas	0.0019286670%
TX74	Bandera County, Texas	0.0578766670%
TX75	Bangs City, Texas	0.0020333330%
TX76	Bardwell City, Texas	0.0002413330%
TX77	Barry City, Texas	0.0001333330%
TX78	Barstow City, Texas	0.0000406670%
TX79	Bartlett City, Texas	0.0022493330%
TX80	Bartonville Town, Texas	0.0059246670%
TX81	Bastrop City, Texas	0.0308800000%
TX82	Bastrop County, Texas	0.2293066670%
TX83	Bay City, Texas	0.0386080000%
TX84	Baylor County, Texas	0.0198880000%
TX85	Bayou Vista City, Texas	0.0041600000%
TX86	Bayside Town, Texas	0.0001613330%
TX87	Baytown City, Texas	0.1440440000%
TX88	Bayview Town, Texas	0.0000273330%
TX89	Beach City, Texas	0.0083366670%
TX90	Bear Creek Village, Texas	0.0006040000%
TX91	Beasley City, Texas	0.0000866670%
TX92	Beaumont City, Texas	0.4553400000%
TX93	Beckville City, Texas	0.0008313330%
TX94	Bedford City, Texas	0.0628760000%
TX95	Bedias City, Texas	0.0023166670%
TX96	Bee Cave City, Texas	0.0085753330%
TX97	Bee County, Texas	0.0652293330%
TX98	Beeville City, Texas	0.0160180000%

State ID	Qualifying Subdivision	Consolidated State Allocation
TX99	Bell County, Texas	0.4338320000%
TX100	Bellaire City, Texas	0.0275093330%
TX101	Bellevue City, Texas	0.0000373330%
TX102	Bellmead City, Texas	0.0096580000%
TX103	Bells Town, Texas	0.0012606670%
TX104	Bellville City, Texas	0.0049920000%
TX105	Belton City, Texas	0.0484533330%
TX106	Benavides City, Texas	0.0001013330%
TX107	Benbrook City, Texas	0.0292793330%
TX108	Benjamin City, Texas	0.0006340000%
TX109	Berryville Town, Texas	0.0095860000%
TX110	Bertram City, Texas	0.0001213330%
TX111	Beverly Hills City, Texas	0.0028906670%
TX112	Bevil Oaks City, Texas	0.0003660000%
TX113	Bexar County, Texas	4.6714346670%
TX114	Big Lake City, Texas	0.0003646670%
TX115	Big Sandy Town, Texas	0.0030526670%
TX116	Big Spring City, Texas	0.1266186670%
TX117	Big Wells City, Texas	0.0001573330%
TX118	Bishop City, Texas	0.0054753330%
TX119	Bishop Hills Town, Texas	0.0002153330%
TX120	Blackwell City, Texas	0.0000206670%
TX121	Blanco City, Texas	0.0041273330%
TX122	Blanco County, Texas	0.0328153330%
TX123	Blanket Town, Texas	0.0000980000%
TX124	Bloomburg Town, Texas	0.0006733330%
TX125	Blooming Grove Town, Texas	0.0002346670%
TX126	Blossom City, Texas	0.0001320000%
TX127	Blue Mound City, Texas	0.0019253330%
TX128	Blue Ridge City, Texas	0.0008966670%
TX129	Blum Town, Texas	0.0010813330%
TX130	Boerne City, Texas	0.0303840000%
TX131	Bogata City, Texas	0.0024326670%
TX132	Bonham City, Texas	0.0672726670%
TX133	Bonney Village, Texas	0.0016733330%
TX134	Booker Town, Texas	0.0006906670%
TX135	Borden County, Texas	0.0006666670%
TX136	Borger City, Texas	0.0464533330%
TX137	Bosque County, Texas	0.0473820000%
TX138	Bovina City, Texas	0.0001153330%
TX139	Bowie City, Texas	0.0557466670%
TX140	Bowie County, Texas	0.1554600000%
TX141	Boyd Town, Texas	0.0046353330%
TX142	Brackettville City, Texas	0.0000053330%
TX143	Brady City, Texas	0.0183200000%
TX144	Brazoria City, Texas	0.0076913330%
TX145	Brazoria County, Texas	0.6807266670%
TX146	Brazos Bend City, Texas	0.0003080000%
TX147	Brazos Country City, Texas	0.0006013330%

State ID	Qualifying Subdivision	Consolidated State Allocation
TX148	Brazos County, Texas	0.2280580000%
TX149	Breckenridge City, Texas	0.0159840000%
TX150	Bremond City, Texas	0.0037026670%
TX151	Brenham City, Texas	0.0365000000%
TX152	Brewster County, Texas	0.0400580000%
TX153	Briarcliff Village, Texas	0.0003813330%
TX154	Briaroaks City, Texas	0.0000380000%
TX155	Bridge City, Texas	0.0538373330%
TX156	Bridgeport City, Texas	0.0222006670%
TX157	Briscoe County, Texas	0.0006513330%
TX158	Broaddus Town, Texas	0.0000206670%
TX159	Bronte Town, Texas	0.0000660000%
TX160	Brooks County, Texas	0.0138066670%
TX161	Brookshire City, Texas	0.0042706670%
TX162	Brookside Village City, Texas	0.0007400000%
TX163	Brown County, Texas	0.1289446670%
TX164	Browndell City, Texas	0.0001013330%
TX165	Brownfield City, Texas	0.0096346670%
TX166	Brownsboro City, Texas	0.0021173330%
TX167	Brownsville City, Texas	0.2833713330%
TX168	Brownwood City, Texas	0.1110480000%
TX169	Bruceville-Eddy City, Texas	0.0011280000%
TX170	Bryan City, Texas	0.1645980000%
TX171	Bryson City, Texas	0.0008186670%
TX172	Buckholts Town, Texas	0.0007420000%
TX173	Buda City, Texas	0.0071893330%
TX174	Buffalo City, Texas	0.0079106670%
TX175	Buffalo Gap Town, Texas	0.0000586670%
TX176	Buffalo Springs Village, Texas	0.0001253330%
TX177	Bullard Town, Texas	0.0049913330%
TX178	Bulverde City, Texas	0.0096240000%
TX179	Bunker Hill Village City, Texas	0.0003146670%
TX180	Burkburnett City, Texas	0.0252293330%
TX181	Burke City, Texas	0.0007426670%
TX182	Burleson City, Texas	0.1011860000%
TX183	Burleson County, Texas	0.0468293330%
TX184	Burnet City, Texas	0.0222300000%
TX185	Burnet County, Texas	0.1265526670%
TX186	Burton City, Texas	0.0006246670%
TX187	Byers City, Texas	0.0000513330%
TX188	Bynum Town, Texas	0.0002533330%
TX189	Cactus City, Texas	0.0031860000%
TX190	Caddo Mills City, Texas	0.0000286670%
TX191	Caldwell City, Texas	0.0121633330%
TX192	Caldwell County, Texas	0.0576086670%
TX193	Calhoun County, Texas	0.0852840000%
TX194	Callahan County, Texas	0.0085960000%
TX195	Callisburg City, Texas	0.0000673330%
TX196	Calvert City, Texas	0.0005146670%

State ID	Qualifying Subdivision	Consolidated State Allocation
TX197	Cameron City, Texas	0.0073940000%
TX198	Cameron County, Texas	0.3580173330%
TX199	Camp County, Texas	0.0192340000%
TX200	Camp Wood City, Texas	0.0002813330%
TX201	Campbell City, Texas	0.0007440000%
TX202	Canadian City, Texas	0.0007266670%
TX203	Caney City Town, Texas	0.0013366670%
TX204	Canton City, Texas	0.0378226670%
TX205	Canyon City, Texas	0.0175006670%
TX206	Carbon Town, Texas	0.0004133330%
TX207	Carl's Corner Town, Texas	0.0000320000%
TX208	Carmine City, Texas	0.0002566670%
TX209	Carrizo Springs City, Texas	0.0011140000%
TX210	Carrollton City, Texas	0.2068366670%
TX211	Carson County, Texas	0.0196620000%
TX212	Carthage City, Texas	0.0126180000%
TX213	Cashion Community City, Texas	0.0002146670%
TX214	Cass County, Texas	0.0621033330%
TX215	Castle Hills City, Texas	0.0085200000%
TX216	Castro County, Texas	0.0029466670%
TX217	Castroville City, Texas	0.0030166670%
TX218	Cedar Hill City, Texas	0.0467513330%
TX219	Cedar Park City, Texas	0.1237113330%
TX220	Celeste City, Texas	0.0008533330%
TX221	Celina City, Texas	0.0121886670%
TX222	Center City, Texas	0.0392253330%
TX223	Centerville City, Texas	0.0002566670%
TX224	Chambers County, Texas	0.1021253330%
TX225	Chandler City, Texas	0.0115760000%
TX226	Channing City, Texas	0.0000013330%
TX227	Charlotte City, Texas	0.0028380000%
TX228	Cherokee County, Texas	0.1044080000%
TX229	Chester Town, Texas	0.0007826670%
TX230	Chico City, Texas	0.0019520000%
TX231	Childress City, Texas	0.0252773330%
TX232	Childress County, Texas	0.0337213330%
TX233	Chillicothe City, Texas	0.0001146670%
TX234	China City, Texas	0.0003480000%
TX235	China Grove Town, Texas	0.0003986670%
TX236	Chireno City, Texas	0.0010453330%
TX237	Christine Town, Texas	0.0002360000%
TX238	Cibolo City, Texas	0.0091266670%
TX239	Cisco City, Texas	0.0048120000%
TX240	Clarendon City, Texas	0.0000760000%
TX241	Clarksville City, Texas	0.0139273330%
TX242	Clarksville City, Texas	0.0000360000%
TX243	Claude City, Texas	0.0000173330%
TX244	Clay County, Texas	0.0480333330%
TX245	Clear Lake Shores City, Texas	0.0044546670%

State ID	Qualifying Subdivision	Consolidated State Allocation
TX246	Cleburne City, Texas	0.1521226670%
TX247	Cleveland City, Texas	0.0645980000%
TX248	Clifton City, Texas	0.0066260000%
TX249	Clint Town, Texas	0.0002500000%
TX250	Clute City, Texas	0.0342333330%
TX251	Clyde City, Texas	0.0115246670%
TX252	Coahoma Town, Texas	0.0015273330%
TX253	Cochran County, Texas	0.0022593330%
TX254	Cockrell Hill City, Texas	0.0003413330%
TX255	Coffee City Town, Texas	0.0007246670%
TX256	Coke County, Texas	0.0036813330%
TX257	Coldspring City, Texas	0.0002980000%
TX258	Coleman City, Texas	0.0036280000%
TX259	Coleman County, Texas	0.0027760000%
TX260	College Station City, Texas	0.1720980000%
TX261	Colleyville City, Texas	0.0306993330%
TX262	Collin County, Texas	0.8444806670%
TX263	Collingsworth County, Texas	0.0128226670%
TX264	Collinsville Town, Texas	0.0012206670%
TX265	Colmesneil City, Texas	0.0014740000%
TX266	Colorado City, Texas	0.0056033330%
TX267	Colorado County, Texas	0.0327226670%
TX268	Columbus City, Texas	0.0045780000%
TX269	Comal County, Texas	0.2640946670%
TX270	Comanche City, Texas	0.0110020000%
TX271	Comanche County, Texas	0.0339760000%
TX272	Combes Town, Texas	0.0011400000%
TX273	Combine City, Texas	0.0012613330%
TX274	Commerce City, Texas	0.0225793330%
TX275	Como Town, Texas	0.0002766670%
TX276	Concho County, Texas	0.0025726670%
TX277	Conroe City, Texas	0.3111140000%
TX278	Converse City, Texas	0.0184620000%
TX279	Cooke County, Texas	0.1336340000%
TX280	Cool City, Texas	0.0004873330%
TX281	Coolidge Town, Texas	0.0001620000%
TX282	Cooper City, Texas	0.0002413330%
TX283	Coppell City, Texas	0.0577286670%
TX284	Copper Canyon Town, Texas	0.0003260000%
TX285	Copperas Cove City, Texas	0.0889946670%
TX286	Corinth City, Texas	0.0501986670%
TX287	Corpus Christi City, Texas	1.2084713330%
TX288	Corral City Town, Texas	0.0000953330%
TX289	Corrigan Town, Texas	0.0142120000%
TX290	Corsicana City, Texas	0.0582066670%
TX291	Coryell County, Texas	0.0824393330%
TX292	Cottle County, Texas	0.0005833330%
TX293	Cottonwood City, Texas	0.0001926670%
TX294	Cottonwood Shores City, Texas	0.0008020000%

State ID	Qualifying Subdivision	Consolidated State Allocation
TX295	Cotulla City, Texas	0.0008340000%
TX296	Coupland City, Texas	0.0001773330%
TX297	Cove City, Texas	0.0002580000%
TX298	Covington City, Texas	0.0003460000%
TX299	Coyote Flats City, Texas	0.0009813330%
TX300	Crandall City, Texas	0.0080626670%
TX301	Crane City, Texas	0.0070660000%
TX302	Crane County, Texas	0.0174306670%
TX303	Cranfills Gap City, Texas	0.0000853330%
TX304	Crawford Town, Texas	0.0002553330%
TX305	Creedmoor City, Texas	0.0000106670%
TX306	Cresson City, Texas	0.0007240000%
TX307	Crockett City, Texas	0.0156020000%
TX308	Crockett County, Texas	0.0121400000%
TX309	Crosby County, Texas	0.0122586670%
TX310	Crosbyton City, Texas	0.0009986670%
TX311	Cross Plains Town, Texas	0.0032513330%
TX312	Cross Roads Town, Texas	0.0001626670%
TX313	Cross Timber Town, Texas	0.0003613330%
TX314	Crowell City, Texas	0.0042233330%
TX315	Crowley City, Texas	0.0148966670%
TX316	Crystal City, Texas	0.0129413330%
TX317	Cuero City, Texas	0.0164593330%
TX318	Culberson County, Texas	0.0005260000%
TX319	Cumby City, Texas	0.0035466670%
TX320	Cuney Town, Texas	0.0004040000%
TX321	Cushing City, Texas	0.0007466670%
TX322	Cut and Shoot City, Texas	0.0014273330%
TX323	Daingerfield City, Texas	0.0083173330%
TX324	Daisetta City, Texas	0.0035800000%
TX325	Dalhart City, Texas	0.0077393330%
TX326	Dallam County, Texas	0.0144573330%
TX327	Dallas City, Texas	1.9999346670%
TX328	Dallas County, Texas	5.6921940000%
TX329	Dalworthington Gardens City, Texas	0.0040400000%
TX330	Danbury City, Texas	0.0028206670%
TX331	Darrouzett Town, Texas	0.0000673330%
TX332	Dawson County, Texas	0.0312740000%
TX333	Dawson Town, Texas	0.0004000000%
TX334	Dayton City, Texas	0.0314146670%
TX335	Dayton Lakes City, Texas	0.0000253330%
TX336	De Kalb City, Texas	0.0006900000%
TX337	De Leon City, Texas	0.0054786670%
TX338	De Witt County, Texas	0.0459300000%
TX339	Deaf Smith County, Texas	0.0230213330%
TX340	Dean City, Texas	0.0000940000%
TX341	Decatur City, Texas	0.0377793330%
TX342	Decordova City, Texas	0.0091853330%

State ID	Qualifying Subdivision	Consolidated State Allocation
TX343	Deer Park City, Texas	0.0329253330%
TX344	Del Rio City, Texas	0.0393706670%
TX345	Dell City, Texas	0.0000100000%
TX346	Delta County, Texas	0.0203893330%
TX347	Denison City, Texas	0.1402840000%
TX348	Denton City, Texas	0.3055560000%
TX349	Denton County, Texas	0.7548653330%
TX350	Denver City Town, Texas	0.0014026670%
TX351	Deport City, Texas	0.0000280000%
TX352	Desoto City, Texas	0.0482666670%
TX353	Detroit Town, Texas	0.0006433330%
TX354	Devers City, Texas	0.0001273330%
TX355	Devine City, Texas	0.0029026670%
TX356	Diboll City, Texas	0.0170220000%
TX357	Dickens City, Texas	0.0000473330%
TX358	Dickens County, Texas	0.0012486670%
TX359	Dickinson City, Texas	0.0557886670%
TX360	Dilley City, Texas	0.0017553330%
TX361	Dimmit County, Texas	0.0221960000%
TX362	Dimmitt City, Texas	0.0006746670%
TX363	Dish Town, Texas	0.0000126670%
TX364	Dodd City Town, Texas	0.0008073330%
TX365	Dodson Town, Texas	0.0002980000%
TX366	Domino Town, Texas	0.0001306670%
TX367	Donley County, Texas	0.0149133330%
TX368	Donna City, Texas	0.0091986670%
TX369	Dorchester City, Texas	0.0001540000%
TX370	Double Oak Town, Texas	0.0031766670%
TX371	Douglassville Town, Texas	0.0003826670%
TX372	Dripping Springs City, Texas	0.0005406670%
TX373	Driscoll City, Texas	0.0000260000%
TX374	Dublin City, Texas	0.0096520000%
TX375	Dumas City, Texas	0.0174860000%
TX376	Duncanville City, Texas	0.0388853330%
TX377	Duval County, Texas	0.0327393330%
TX378	Eagle Lake City, Texas	0.0032546670%
TX379	Eagle Pass City, Texas	0.0373366670%
TX380	Early City, Texas	0.0098920000%
TX381	Earth City, Texas	0.0001613330%
TX382	East Bernard City, Texas	0.0037026670%
TX383	East Mountain City, Texas	0.0016626670%
TX384	East Tawakoni City, Texas	0.0018153330%
TX385	Eastland City, Texas	0.0105973330%
TX386	Eastland County, Texas	0.0348500000%
TX387	Easton City, Texas	0.0002193330%
TX388	Ector City, Texas	0.0007386670%
TX389	Ector County, Texas	0.3200000000%
TX390	Edcouch City, Texas	0.0027340000%
TX391	Eden City, Texas	0.0003313330%

State ID	Qualifying Subdivision	Consolidated State Allocation
TX392	Edgecliff Village Town, Texas	0.0014880000%
TX393	Edgewood Town, Texas	0.0087693330%
TX394	Edinburg City, Texas	0.0805893330%
TX395	Edmonson Town, Texas	0.0000906670%
TX396	Edna City, Texas	0.0121293330%
TX397	Edom City, Texas	0.0014326670%
TX398	Edwards County, Texas	0.0006500000%
TX399	El Campo City, Texas	0.0211333330%
TX400	El Cenizo City, Texas	0.0004140000%
TX401	El Lago City, Texas	0.0037360000%
TX402	El Paso City, Texas	0.8162473330%
TX403	El Paso County, Texas	1.7280806670%
TX404	Eldorado City, Texas	0.0000333330%
TX405	Electra City, Texas	0.0104773330%
TX406	Elgin City, Texas	0.0175226670%
TX407	Elkhart Town, Texas	0.0002006670%
TX408	Ellis County, Texas	0.2102480000%
TX409	Elmendorf City, Texas	0.0004973330%
TX410	Elsa City, Texas	0.0051466670%
TX411	Emhouse Town, Texas	0.0000553330%
TX412	Emory City, Texas	0.0025853330%
TX413	Enchanted Oaks Town, Texas	0.0008660000%
TX414	Encinal City, Texas	0.0010100000%
TX415	Ennis City, Texas	0.0545593330%
TX416	Erath County, Texas	0.0684106670%
TX417	Escobares City, Texas	0.0000266670%
TX418	Estelline Town, Texas	0.0006060000%
TX419	Euless City, Texas	0.0618826670%
TX420	Eureka City, Texas	0.0002226670%
TX421	Eustace City, Texas	0.0013926670%
TX422	Evant Town, Texas	0.0013786670%
TX423	Everman City, Texas	0.0051280000%
TX424	Fair Oaks Ranch City, Texas	0.0053846670%
TX425	Fairchilds Village, Texas	0.0000540000%
TX426	Fairfield City, Texas	0.0008300000%
TX427	Fairview Town, Texas	0.0214966670%
TX428	Falfurrias City, Texas	0.0014806670%
TX429	Falls City, Texas	0.0000273330%
TX430	Falls County, Texas	0.0230146670%
TX431	Fannin County, Texas	0.0877686670%
TX432	Farmers Branch City, Texas	0.0630213330%
TX433	Farmersville City, Texas	0.0070213330%
TX434	Farwell City, Texas	0.0002286670%
TX435	Fate City, Texas	0.0023153330%
TX436	Fayette County, Texas	0.0616266670%
TX437	Fayetteville City, Texas	0.0002606670%
TX438	Ferris City, Texas	0.0092486670%
TX439	Fisher County, Texas	0.0036786670%
TX440	Flatonia Town, Texas	0.0037740000%

State ID	Qualifying Subdivision	Consolidated State Allocation
TX441	Florence City, Texas	0.0026326670%
TX442	Floresville City, Texas	0.0144660000%
TX443	Flower Mound Town, Texas	0.1435040000%
TX444	Floyd County, Texas	0.0060326670%
TX445	Floydada City, Texas	0.0042380000%
TX446	Foard County, Texas	0.0038426670%
TX447	Follett City, Texas	0.0001413330%
TX448	Forest Hill City, Texas	0.0174213330%
TX449	Forney City, Texas	0.0534080000%
TX450	Forsan City, Texas	0.0003840000%
TX451	Fort Bend County, Texas	1.0044793330%
TX452	Fort Stockton City, Texas	0.0029406670%
TX453	Fort Worth City, Texas	1.4138600000%
TX454	Franklin City, Texas	0.0026206670%
TX455	Franklin County, Texas	0.0171886670%
TX456	Frankston Town, Texas	0.0001826670%
TX457	Fredericksburg City, Texas	0.0376573330%
TX458	Freeport City, Texas	0.0486486670%
TX459	Freer City, Texas	0.0021806670%
TX460	Freestone County, Texas	0.0336633330%
TX461	Friendswood City, Texas	0.0935533330%
TX462	Frio County, Texas	0.0133026670%
TX463	Friona City, Texas	0.0018986670%
TX464	Frisco City, Texas	0.2702060000%
TX465	Fritch City, Texas	0.0030320000%
TX466	Frost City, Texas	0.0002140000%
TX467	Fruitvale City, Texas	0.0015626670%
TX468	Fulshear City, Texas	0.0035146670%
TX469	Fulton Town, Texas	0.0010680000%
TX470	Gaines County, Texas	0.0362313330%
TX471	Gainesville City, Texas	0.1026533330%
TX472	Galena Park City, Texas	0.0087286670%
TX473	Gallatin City, Texas	0.0008353330%
TX474	Galveston City, Texas	0.3254580000%
TX475	Galveston County, Texas	0.7493953330%
TX476	Ganado City, Texas	0.0036733330%
TX477	Garden Ridge City, Texas	0.0075673330%
TX478	Garland City, Texas	0.2801626670%
TX479	Garrett Town, Texas	0.0016733330%
TX480	Garrison City, Texas	0.0023700000%
TX481	Gary City Town, Texas	0.0003000000%
TX482	Garza County, Texas	0.0059626670%
TX483	Gatesville City, Texas	0.0179960000%
TX484	George West City, Texas	0.0041380000%
TX485	Georgetown City, Texas	0.1505973330%
TX486	Gholson City, Texas	0.0010033330%
TX487	Giddings City, Texas	0.0084493330%
TX488	Gillespie County, Texas	0.0421273330%
TX489	Gilmer City, Texas	0.0226340000%

State ID	Qualifying Subdivision	Consolidated State Allocation
TX490	Gladewater City, Texas	0.0164253330%
TX491	Glasscock County, Texas	0.0006666670%
TX492	Glen Rose City, Texas	0.0003600000%
TX493	Glenn Heights City, Texas	0.0110620000%
TX494	Godley City, Texas	0.0020766670%
TX495	Goldsmith City, Texas	0.0004513330%
TX496	Goldthwaite City, Texas	0.0008166670%
TX497	Goliad City, Texas	0.0023753330%
TX498	Goliad County, Texas	0.0231066670%
TX499	Golinda City, Texas	0.0000666670%
TX500	Gonzales City, Texas	0.0099213330%
TX501	Gonzales County, Texas	0.0221533330%
TX502	Goodlow City, Texas	0.0001473330%
TX503	Goodrich City, Texas	0.0064286670%
TX504	Gordon City, Texas	0.0002433330%
TX505	Goree City, Texas	0.0004993330%
TX506	Gorman City, Texas	0.0020713330%
TX507	Graford City, Texas	0.0000153330%
TX508	Graham City, Texas	0.1569520000%
TX509	Granbury City, Texas	0.0478233330%
TX510	Grand Prairie City, Texas	0.2969593330%
TX511	Grand Saline City, Texas	0.0242753330%
TX512	Grandfalls Town, Texas	0.0000433330%
TX513	Grandview City, Texas	0.0044000000%
TX514	Granger City, Texas	0.0018273330%
TX515	Granite Shoals City, Texas	0.0078893330%
TX516	Granjeno City, Texas	0.0000286670%
TX517	Grapeland City, Texas	0.0048580000%
TX518	Grapevine City, Texas	0.0861300000%
TX519	Gray County, Texas	0.0439226670%
TX520	Grays Prairie Village, Texas	0.0000113330%
TX521	Grayson County, Texas	0.3593886670%
TX522	Greenville City, Texas	0.1354080000%
TX523	Gregg County, Texas	0.1624960000%
TX524	Gregory City, Texas	0.0031313330%
TX525	Grey Forest City, Texas	0.0003160000%
TX526	Grimes County, Texas	0.0632520000%
TX527	Groesbeck City, Texas	0.0038300000%
TX528	Groom Town, Texas	0.0006433330%
TX529	Groves City, Texas	0.0271680000%
TX530	Groveton City, Texas	0.0058846670%
TX531	Gruver City, Texas	0.0007773330%
TX532	Guadalupe County, Texas	0.0978826670%
TX533	Gun Barrel City, Texas	0.0242013330%
TX534	Gunter City, Texas	0.0030726670%
TX535	Gustine Town, Texas	0.0000226670%
TX536	Hackberry Town, Texas	0.0000626670%
TX537	Hale Center City, Texas	0.0040280000%
TX538	Hale County, Texas	0.0527666670%

State ID	Qualifying Subdivision	Consolidated State Allocation
TX539	Hall County, Texas	0.0059553330%
TX540	Hallettsville City, Texas	0.0045966670%
TX541	Hallsburg City, Texas	0.0001813330%
TX542	Hallsville City, Texas	0.0068260000%
TX543	Haltom City, Texas	0.0478666670%
TX544	Hamilton City, Texas	0.0023873330%
TX545	Hamilton County, Texas	0.0442380000%
TX546	Hamlin City, Texas	0.0031040000%
TX547	Hansford County, Texas	0.0109440000%
TX548	Happy Town, Texas	0.0002180000%
TX549	Hardeman County, Texas	0.0101460000%
TX550	Hardin City, Texas	0.0000666670%
TX551	Hardin County, Texas	0.2532000000%
TX552	Harker Heights City, Texas	0.0757873330%
TX553	Harlingen City, Texas	0.1102860000%
TX554	Harris County, Texas	9.9774680000%
TX555	Harrison County, Texas	0.1239400000%
TX556	Hart City, Texas	0.0000573330%
TX557	Hartley County, Texas	0.0005240000%
TX558	Haskell City, Texas	0.0072193330%
TX559	Haskell County, Texas	0.0146740000%
TX560	Haslet City, Texas	0.0012720000%
TX561	Hawk Cove City, Texas	0.0004493330%
TX562	Hawkins City, Texas	0.0052880000%
TX563	Hawley City, Texas	0.0006206670%
TX564	Hays City, Texas	0.0003373330%
TX565	Hays County, Texas	0.3529926670%
TX566	Hearne City, Texas	0.0112160000%
TX567	Heath City, Texas	0.0191673330%
TX568	Hebron Town, Texas	0.0004580000%
TX569	Hedley City, Texas	0.0000466670%
TX570	Hedwig Village City, Texas	0.0087113330%
TX571	Helotes City, Texas	0.0105266670%
TX572	Hemphill City, Texas	0.0053566670%
TX573	Hemphill County, Texas	0.0095960000%
TX574	Hempstead City, Texas	0.0141600000%
TX575	Henderson City, Texas	0.0399773330%
TX576	Henderson County, Texas	0.2186433330%
TX577	Henrietta City, Texas	0.0018133330%
TX578	Hereford City, Texas	0.0136153330%
TX579	Hewitt City, Texas	0.0131840000%
TX580	Hickory Creek Town, Texas	0.0110066670%
TX581	Hico City, Texas	0.0036893330%
TX582	Hidalgo City, Texas	0.0177473330%
TX583	Hidalgo County, Texas	0.8354020000%
TX584	Hideaway City, Texas	0.0006146670%
TX585	Higgins City, Texas	0.0000286670%
TX586	Highland Haven City, Texas	0.0002133330%
TX587	Highland Park Town, Texas	0.0289220000%

State ID	Qualifying Subdivision	Consolidated State Allocation
TX588	Highland Village City, Texas	0.0335433330%
TX589	Hill Country Village City, Texas	0.0043233330%
TX590	Hill County, Texas	0.0849846670%
TX591	Hillcrest Village, Texas	0.0035633330%
TX592	Hillsboro City, Texas	0.0310726670%
TX593	Hilshire Village City, Texas	0.0005726670%
TX594	Hitchcock City, Texas	0.0191973330%
TX595	Hockley County, Texas	0.0309380000%
TX596	Holiday Lakes Town, Texas	0.0011966670%
TX597	Holland Town, Texas	0.0000513330%
TX598	Holliday City, Texas	0.0039400000%
TX599	Hollywood Park Town, Texas	0.0062826670%
TX600	Hondo City, Texas	0.0768586670%
TX601	Honey Grove City, Texas	0.0047973330%
TX602	Hood County, Texas	0.1947366670%
TX603	Hooks City, Texas	0.0018013330%
TX604	Hopkins County, Texas	0.0996786670%
TX605	Horizon City, Texas	0.0050133330%
TX606	Horseshoe Bay City, Texas	0.0321153330%
TX607	Houston City, Texas	4.6811953330%
TX608	Houston County, Texas	0.0524320000%
TX609	Howard County, Texas	0.0595533330%
TX610	Howardwick City, Texas	0.0000560000%
TX611	Howe Town, Texas	0.0061180000%
TX612	Hubbard City, Texas	0.0024233330%
TX613	Hudson City, Texas	0.0045600000%
TX614	Hudson Oaks City, Texas	0.0104246670%
TX615	Hudspeth County, Texas	0.0006566670%
TX616	Hughes Springs City, Texas	0.0029613330%
TX617	Humble City, Texas	0.0493013330%
TX618	Hunt County, Texas	0.2065673330%
TX619	Hunters Creek Village City, Texas	0.0098053330%
TX620	Huntington City, Texas	0.0058613330%
TX621	Huntsville City, Texas	0.0535820000%
TX622	Hurst City, Texas	0.0661246670%
TX623	Hutchins City, Texas	0.0063673330%
TX624	Hutchinson County, Texas	0.0497533330%
TX625	Hutto City, Texas	0.0255640000%
TX626	Huxley City, Texas	0.0004920000%
TX627	Idalou City, Texas	0.0013326670%
TX628	Impact Town, Texas	0.0000053330%
TX629	Indian Lake Town, Texas	0.0003153330%
TX630	Industry City, Texas	0.0004026670%
TX631	Ingleside City, Texas	0.0269913330%
TX632	Ingleside on the Bay City, Texas	0.0000946670%
TX633	Ingram City, Texas	0.0034953330%
TX634	Iola City, Texas	0.0021093330%
TX635	Iowa Colony Village, Texas	0.0027266670%
TX636	Iowa Park City, Texas	0.0156580000%

State ID	Qualifying Subdivision	Consolidated State Allocation
TX637	Iraan City, Texas	0.0000373330%
TX638	Iredell City, Texas	0.0001440000%
TX639	Irion County, Texas	0.0060700000%
TX640	Irving City, Texas	0.2852120000%
TX641	Italy Town, Texas	0.0035660000%
TX642	Itasca City, Texas	0.0057960000%
TX643	Ivanhoe City, Texas	0.0000173330%
TX644	Jacinto City, Texas	0.0094273330%
TX645	Jack County, Texas	0.0098660000%
TX646	Jacksboro City, Texas	0.0155026670%
TX647	Jackson County, Texas	0.0253226670%
TX648	Jacksonville City, Texas	0.0534526670%
TX649	Jamaica Beach City, Texas	0.0032753330%
TX650	Jarrell City, Texas	0.0016153330%
TX651	Jasper City, Texas	0.0522813330%
TX652	Jasper County, Texas	0.1659033330%
TX653	Jayton City, Texas	0.0000420000%
TX654	Jeff Davis County, Texas	0.0056666670%
TX655	Jefferson City, Texas	0.0074626670%
TX656	Jefferson County, Texas	0.5044093330%
TX657	Jersey Village City, Texas	0.0242313330%
TX658	Jewett City, Texas	0.0062253330%
TX659	Jim Hogg County, Texas	0.0084786670%
TX660	Jim Wells County, Texas	0.1110260000%
TX661	Joaquin City, Texas	0.0005400000%
TX662	Johnson City, Texas	0.0023873330%
TX663	Johnson County, Texas	0.2724613330%
TX664	Jolly City, Texas	0.0000173330%
TX665	Jones County, Texas	0.0146673330%
TX666	Jones Creek Village, Texas	0.0033853330%
TX667	Jonestown City, Texas	0.0042793330%
TX668	Josephine City, Texas	0.0005873330%
TX669	Joshua City, Texas	0.0137460000%
TX670	Jourdanton City, Texas	0.0064000000%
TX671	Junction City, Texas	0.0032166670%
TX672	Justin City, Texas	0.0057166670%
TX673	Karnes City, Texas	0.0077546670%
TX674	Karnes County, Texas	0.0234993330%
TX675	Katy City, Texas	0.0349780000%
TX676	Kaufman City, Texas	0.0184046670%
TX677	Kaufman County, Texas	0.2353646670%
TX678	Keene City, Texas	0.0255306670%
TX679	Keller City, Texas	0.0527926670%
TX680	Kemah City, Texas	0.0188833330%
TX681	Kemp City, Texas	0.0042793330%
TX682	Kempner City, Texas	0.0002200000%
TX683	Kendall County, Texas	0.0670953330%
TX684	Kendleton City, Texas	0.0000086670%
TX685	Kenedy City, Texas	0.0004506670%

State ID	Qualifying Subdivision	Consolidated State Allocation
TX686	Kenedy County, Texas	0.0006666670%
TX687	Kenefick Town, Texas	0.0002773330%
TX688	Kennard City, Texas	0.0000880000%
TX689	Kennedale City, Texas	0.0140160000%
TX690	Kent County, Texas	0.0006260000%
TX691	Kerens City, Texas	0.0012826670%
TX692	Kermit City, Texas	0.0037680000%
TX693	Kerr County, Texas	0.1456346670%
TX694	Kerrville City, Texas	0.1269046670%
TX695	Kilgore City, Texas	0.0703886670%
TX696	Killeen City, Texas	0.3571000000%
TX697	Kimble County, Texas	0.0136533330%
TX698	King County, Texas	0.0006666670%
TX699	Kingsville City, Texas	0.0133886670%
TX700	Kinney County, Texas	0.0014280000%
TX701	Kirby City, Texas	0.0058346670%
TX702	Kirbyville City, Texas	0.0071266670%
TX703	Kirvin Town, Texas	0.0000013330%
TX704	Kleberg County, Texas	0.0827393330%
TX705	Knollwood City, Texas	0.0007733330%
TX706	Knox City Town, Texas	0.0013080000%
TX707	Knox County, Texas	0.0078200000%
TX708	Kosse Town, Texas	0.0016453330%
TX709	Kountze City, Texas	0.0131440000%
TX710	Kress City, Texas	0.0001240000%
TX711	Krugerville City, Texas	0.0010053330%
TX712	Krum City, Texas	0.0064406670%
TX713	Kurten Town, Texas	0.0004573330%
TX714	Kyle City, Texas	0.0345566670%
TX715	La Feria City, Texas	0.0069206670%
TX716	La Grange City, Texas	0.0064153330%
TX717	La Grulla City, Texas	0.0011386670%
TX718	La Joya City, Texas	0.0056380000%
TX719	La Marque City, Texas	0.0659533330%
TX720	La Porte City, Texas	0.0610213330%
TX721	La Salle County, Texas	0.0099833330%
TX722	La Vernia City, Texas	0.0021446670%
TX723	La Villa City, Texas	0.0003813330%
TX724	La Ward City, Texas	0.0002140000%
TX725	Lacoste City, Texas	0.0001060000%
TX726	Lacy-Lakeview City, Texas	0.0077326670%
TX727	Ladonia Town, Texas	0.0013406670%
TX728	Lago Vista City, Texas	0.0091786670%
TX729	Laguna Vista Town, Texas	0.0024593330%
TX730	Lake Bridgeport City, Texas	0.0001546670%
TX731	Lake City Town, Texas	0.0019453330%
TX732	Lake Dallas City, Texas	0.0168760000%
TX733	Lake Jackson City, Texas	0.0505206670%
TX734	Lake Tanglewood Village, Texas	0.0004086670%

State ID	Qualifying Subdivision	Consolidated State Allocation
TX735	Lake Worth City, Texas	0.0133673330%
TX736	Lakeport City, Texas	0.0003086670%
TX737	Lakeside City Town, Texas	0.0001480000%
TX738	Lakeside Town, San Patricio County, Texas	0.0029826670%
TX739	Lakeside Town, Tarrant County, Texas	0.0029826670%
TX740	Lakeview Town, Texas	0.0002846670%
TX741	Lakeway City, Texas	0.0211046670%
TX742	Lakewood Village City, Texas	0.0003713330%
TX743	Lamar County, Texas	0.0943986670%
TX744	Lamb County, Texas	0.0337873330%
TX745	Lamesa City, Texas	0.0197706670%
TX746	Lampasas City, Texas	0.0188073330%
TX747	Lampasas County, Texas	0.0285453330%
TX748	Lancaster City, Texas	0.0604353330%
TX749	Laredo City, Texas	0.5087826670%
TX750	Latexo City, Texas	0.0000826670%
TX751	Lavaca County, Texas	0.0306486670%
TX752	Lavon City, Texas	0.0049566670%
TX753	Lawn Town, Texas	0.0000386670%
TX754	League City, Texas	0.2016120000%
TX755	Leakey City, Texas	0.0001706670%
TX756	Leander City, Texas	0.0590940000%
TX757	Leary City, Texas	0.0005313330%
TX758	Lee County, Texas	0.0203046670%
TX759	Lefors Town, Texas	0.0001060000%
TX760	Leon County, Texas	0.0449286670%
TX761	Leon Valley City, Texas	0.0155053330%
TX762	Leona City, Texas	0.0005886670%
TX763	Leonard City, Texas	0.0056700000%
TX764	Leroy City, Texas	0.0001173330%
TX765	Levelland City, Texas	0.0312320000%
TX766	Lewisville City, Texas	0.2547293330%
TX767	Lexington Town, Texas	0.0015453330%
TX768	Liberty City, Texas	0.0482286670%
TX769	Liberty County, Texas	0.3541413330%
TX770	Liberty Hill City, Texas	0.0018533330%
TX771	Limestone County, Texas	0.0904560000%
TX772	Lincoln Park Town, Texas	0.0004513330%
TX773	Lindale City, Texas	0.0161346670%
TX774	Linden City, Texas	0.0024406670%
TX775	Lindsay City, Texas	0.0008186670%
TX776	Lipan City, Texas	0.0000293330%
TX777	Lipscomb County, Texas	0.0067546670%
TX778	Little Elm City, Texas	0.0462173330%
TX779	Little River-Academy City, Texas	0.0005320000%
TX780	Littlefield City, Texas	0.0051186670%
TX781	Live Oak City, Texas	0.0218266670%

State ID	Qualifying Subdivision	Consolidated State Allocation
TX782	Live Oak County, Texas	0.0264773330%
TX783	Liverpool City, Texas	0.0009566670%
TX784	Livingston Town, Texas	0.0487766670%
TX785	Llano City, Texas	0.0154140000%
TX786	Llano County, Texas	0.0770980000%
TX787	Lockhart City, Texas	0.0327000000%
TX788	Lockney Town, Texas	0.0022006670%
TX789	Log Cabin City, Texas	0.0013066670%
TX790	Lometa City, Texas	0.0007840000%
TX791	Lone Oak City, Texas	0.0011366670%
TX792	Lone Star City, Texas	0.0055220000%
TX793	Longview City, Texas	0.3215026670%
TX794	Loraine Town, Texas	0.0001253330%
TX795	Lorena City, Texas	0.0022600000%
TX796	Lorenzo City, Texas	0.0075720000%
TX797	Los Fresnos City, Texas	0.0074566670%
TX798	Los Indios Town, Texas	0.0001060000%
TX799	Lott City, Texas	0.0010106670%
TX800	Lovelady City, Texas	0.0001660000%
TX801	Loving County, Texas	0.0006666670%
TX802	Lowry Crossing City, Texas	0.0005220000%
TX803	Lubbock City, Texas	0.2132446670%
TX804	Lubbock County, Texas	0.9198126670%
TX805	Lucas City, Texas	0.0035106670%
TX806	Lueders City, Texas	0.0003386670%
TX807	Lufkin City, Texas	0.1877280000%
TX808	Luling City, Texas	0.0196140000%
TX809	Lumberton City, Texas	0.0244060000%
TX810	Lyford City, Texas	0.0020473330%
TX811	Lynn County, Texas	0.0041833330%
TX812	Lytle City, Texas	0.0048153330%
TX813	Mabank Town, Texas	0.0129620000%
TX814	Madison County, Texas	0.0329946670%
TX815	Madisonville City, Texas	0.0076386670%
TX816	Magnolia City, Texas	0.0173540000%
TX817	Malakoff City, Texas	0.0084093330%
TX818	Malone Town, Texas	0.0002926670%
TX819	Manor City, Texas	0.0083326670%
TX820	Mansfield City, Texas	0.1005253330%
TX821	Manvel City, Texas	0.0082033330%
TX822	Marble Falls City, Texas	0.0246926670%
TX823	Marfa City, Texas	0.0000433330%
TX824	Marietta Town, Texas	0.0002253330%
TX825	Marion City, Texas	0.0001833330%
TX826	Marion County, Texas	0.0364853330%
TX827	Marlin City, Texas	0.0144226670%
TX828	Marquez City, Texas	0.0008813330%
TX829	Marshall City, Texas	0.0722473330%
TX830	Mart City, Texas	0.0006186670%

State ID	Qualifying Subdivision	Consolidated State Allocation
TX831	Martin County, Texas	0.0072413330%
TX832	Martindale City, Texas	0.0016246670%
TX833	Mason City, Texas	0.0005180000%
TX834	Mason County, Texas	0.0020893330%
TX835	Matador Town, Texas	0.0008020000%
TX836	Matagorda County, Texas	0.0901593330%
TX837	Mathis City, Texas	0.0104800000%
TX838	Maud City, Texas	0.0002820000%
TX839	Maverick County, Texas	0.0772793330%
TX840	Maypearl City, Texas	0.0006573330%
TX841	McAllen City, Texas	0.2429493330%
TX842	McCamey City, Texas	0.0003613330%
TX843	McCulloch County, Texas	0.0133473330%
TX844	McGregor City, Texas	0.0061033330%
TX845	McKinney City, Texas	0.3002553330%
TX846	McLean Town, Texas	0.0000093330%
TX847	McLendon-Chisholm City, Texas	0.0002740000%
TX848	McLennan County, Texas	0.3530940000%
TX849	McMullen County, Texas	0.0006666670%
TX850	Meadow Town, Texas	0.0007473330%
TX851	Meadowlakes City, Texas	0.0006033330%
TX852	Meadows Place City, Texas	0.0120986670%
TX853	Medina County, Texas	0.0322366670%
TX854	Megargel Town, Texas	0.0004073330%
TX855	Melissa City, Texas	0.0102540000%
TX856	Melvin Town, Texas	0.0002300000%
TX857	Memphis City, Texas	0.0048020000%
TX858	Menard City, Texas	0.0006606670%
TX859	Menard County, Texas	0.0098113330%
TX860	Mercedes City, Texas	0.0142940000%
TX861	Meridian City, Texas	0.0023640000%
TX862	Merkel Town, Texas	0.0067446670%
TX863	Mertens Town, Texas	0.0001593330%
TX864	Mertzon City, Texas	0.0000193330%
TX865	Mesquite City, Texas	0.2071393330%
TX866	Mexia City, Texas	0.0140640000%
TX867	Miami City, Texas	0.0003033330%
TX868	Midland City, Texas	0.3478993330%
TX869	Midland County, Texas	0.1866180000%
TX870	Midlothian City, Texas	0.0638660000%
TX871	Midway City, Texas	0.0000520000%
TX872	Milam County, Texas	0.0649240000%
TX873	Milano City, Texas	0.0006026670%
TX874	Mildred Town, Texas	0.0001906670%
TX875	Miles City, Texas	0.0000620000%
TX876	Milford Town, Texas	0.0041180000%
TX877	Miller's Cove Town, Texas	0.0000646670%
TX878	Millican Town, Texas	0.0002780000%
TX879	Mills County, Texas	0.0132873330%

State ID	Qualifying Subdivision	Consolidated State Allocation
TX880	Millsap Town, Texas	0.0000226670%
TX881	Mineola City, Texas	0.0324793330%
TX882	Mineral Wells City, Texas	0.0613740000%
TX883	Mingus City, Texas	0.0001260000%
TX884	Mission City, Texas	0.0831786670%
TX885	Missouri City, Texas	0.1397553330%
TX886	Mitchell County, Texas	0.0139000000%
TX887	Mobeetie City, Texas	0.0000346670%
TX888	Mobile City, Texas	0.0013560000%
TX889	Monahans City, Texas	0.0038993330%
TX890	Mont Belvieu City, Texas	0.0131126670%
TX891	Montague County, Texas	0.0631973330%
TX892	Montgomery City, Texas	0.0012560000%
TX893	Montgomery County, Texas	1.8006073330%
TX894	Moody City, Texas	0.0005520000%
TX895	Moore County, Texas	0.0270846670%
TX896	Moore Station City, Texas	0.0005146670%
TX897	Moran City, Texas	0.0000333330%
TX898	Morgan City, Texas	0.0004033330%
TX899	Morgan's Point City, Texas	0.0020700000%
TX900	Morgan's Point Resort City, Texas	0.0053493330%
TX901	Morris County, Texas	0.0355520000%
TX902	Morton City, Texas	0.0001113330%
TX903	Motley County, Texas	0.0022293330%
TX904	Moulton Town, Texas	0.0006660000%
TX905	Mount Calm City, Texas	0.0004033330%
TX906	Mount Enterprise City, Texas	0.0012213330%
TX907	Mount Pleasant City, Texas	0.0437893330%
TX908	Mount Vernon Town, Texas	0.0040326670%
TX909	Mountain City, Texas	0.0010320000%
TX910	Muenster City, Texas	0.0031040000%
TX911	Muleshoe City, Texas	0.0032733330%
TX912	Mullin Town, Texas	0.0002560000%
TX913	Munday City, Texas	0.0013646670%
TX914	Murchison City, Texas	0.0015346670%
TX915	Murphy City, Texas	0.0345953330%
TX916	Mustang Ridge City, Texas	0.0016413330%
TX917	Mustang Town, Texas	0.0000046670%
TX918	Nacogdoches City, Texas	0.1373280000%
TX919	Nacogdoches County, Texas	0.1323886670%
TX920	Naples City, Texas	0.0028160000%
TX921	Nash City, Texas	0.0053326670%
TX922	Nassau Bay City, Texas	0.0074980000%
TX923	Natalia City, Texas	0.0004166670%
TX924	Navarro County, Texas	0.0690086670%
TX925	Navarro Town, Texas	0.0002226670%
TX926	Navasota City, Texas	0.0251173330%
TX927	Nazareth City, Texas	0.0000826670%
TX928	Nederland City, Texas	0.0297233330%

State ID	Qualifying Subdivision	Consolidated State Allocation
TX929	Needville City, Texas	0.0068940000%
TX930	Nevada City, Texas	0.0001580000%
TX931	New Berlin City, Texas	0.0000026670%
TX932	New Boston City, Texas	0.0046353330%
TX933	New Braunfels City, Texas	0.2048753330%
TX934	New Chapel Hill City, Texas	0.0001920000%
TX935	New Deal Town, Texas	0.0002253330%
TX936	New Fairview City, Texas	0.0015560000%
TX937	New Home City, Texas	0.0000060000%
TX938	New Hope Town, Texas	0.0006826670%
TX939	New London City, Texas	0.0027526670%
TX940	New Summerfield City, Texas	0.0002946670%
TX941	New Waverly City, Texas	0.0017080000%
TX942	Newark City, Texas	0.0003466670%
TX943	Newcastle City, Texas	0.0006093330%
TX944	Newton City, Texas	0.0040680000%
TX945	Newton County, Texas	0.1053373330%
TX946	Neylandville Town, Texas	0.0001086670%
TX947	Niederwald City, Texas	0.0000106670%
TX948	Nixon City, Texas	0.0015220000%
TX949	Nocona City, Texas	0.0110240000%
TX950	Nolan County, Texas	0.0335080000%
TX951	Nolanville City, Texas	0.0028313330%
TX952	Nome City, Texas	0.0002606670%
TX953	Noonday City, Texas	0.0001506670%
TX954	Nordheim City, Texas	0.0004646670%
TX955	Normangee Town, Texas	0.0041280000%
TX956	North Cleveland City, Texas	0.0000700000%
TX957	North Richland Hills City, Texas	0.0976126670%
TX958	Northlake Town, Texas	0.0059366670%
TX959	Novice City, Texas	0.0000506670%
TX960	Nueces County, Texas	0.9119546670%
TX961	Oak Grove Town, Texas	0.0018460000%
TX962	Oak Leaf City, Texas	0.0004080000%
TX963	Oak Point City, Texas	0.0060073330%
TX964	Oak Ridge North City, Texas	0.0223413330%
TX965	Oak Ridge Town, Cooke County, Texas	0.0002386670%
TX966	Oak Ridge Town, Kaufman County, Texas	0.0002386670%
TX967	Oak Valley Town, Texas	0.0000046670%
TX968	Oakwood Town, Texas	0.0000986670%
TX969	O'Brien City, Texas	0.0000506670%
TX970	Ochiltree County, Texas	0.0103173330%
TX971	Odem City, Texas	0.0049466670%
TX972	Odessa City, Texas	0.3727753330%
TX973	O'Donnell City, Texas	0.0000180000%
TX974	Oglesby City, Texas	0.0000193330%
TX975	Old River-Winfree City, Texas	0.0144353330%

State ID	Qualifying Subdivision	Consolidated State Allocation
TX976	Oldham County, Texas	0.0068786670%
TX977	Olmos Park City, Texas	0.0065340000%
TX978	Olney City, Texas	0.0040586670%
TX979	Olton City, Texas	0.0007980000%
TX980	Omaha City, Texas	0.0027900000%
TX981	Onalaska City, Texas	0.0211026670%
TX982	Opdyke West Town, Texas	0.0003193330%
TX983	Orange City, Texas	0.2075593330%
TX984	Orange County, Texas	0.4598786670%
TX985	Orange Grove City, Texas	0.0011180000%
TX986	Orchard City, Texas	0.0005780000%
TX987	Ore City, Texas	0.0045373330%
TX988	Overton City, Texas	0.0052666670%
TX989	Ovilla City, Texas	0.0089273330%
TX990	Oyster Creek City, Texas	0.0064220000%
TX991	Paducah Town, Texas	0.0000833330%
TX992	Paint Rock Town, Texas	0.0000940000%
TX993	Palacios City, Texas	0.0093573330%
TX994	Palestine City, Texas	0.1186726670%
TX995	Palisades Village, Texas	0.0001600000%
TX996	Palm Valley City, Texas	0.0012786670%
TX997	Palmer Town, Texas	0.0084440000%
TX998	Palmhurst City, Texas	0.0031066670%
TX999	Palmview City, Texas	0.0050513330%
TX1000	Palo Pinto County, Texas	0.0830806670%
TX1001	Pampa City, Texas	0.0448180000%
TX1002	Panhandle Town, Texas	0.0063573330%
TX1003	Panola County, Texas	0.0537993330%
TX1004	Panorama Village City, Texas	0.0008613330%
TX1005	Pantego Town, Texas	0.0085986670%
TX1006	Paradise City, Texas	0.0000346670%
TX1007	Paris City, Texas	0.1341200000%
TX1008	Parker City, Texas	0.0068713330%
TX1009	Parker County, Texas	0.3175026670%
TX1010	Parmer County, Texas	0.0105773330%
TX1011	Pasadena City, Texas	0.2376906670%
TX1012	Pattison City, Texas	0.0007653330%
TX1013	Patton Village City, Texas	0.0061786670%
TX1014	Payne Springs Town, Texas	0.0011800000%
TX1015	Pearland City, Texas	0.2225013330%
TX1016	Pearsall City, Texas	0.0077133330%
TX1017	Pecan Gap City, Texas	0.0004793330%
TX1018	Pecan Hill City, Texas	0.0001526670%
TX1019	Pecos City, Texas	0.0050813330%
TX1020	Pecos County, Texas	0.0313313330%
TX1021	Pelican Bay City, Texas	0.0007993330%
TX1022	Penelope Town, Texas	0.0002766670%
TX1023	Penitas City, Texas	0.0002080000%
TX1024	Perryton City, Texas	0.0155760000%

State ID	Qualifying Subdivision	Consolidated State Allocation
TX1025	Petersburg City, Texas	0.0011273330%
TX1026	Petrolia City, Texas	0.0000113330%
TX1027	Petronila City, Texas	0.0000033330%
TX1028	Pflugerville City, Texas	0.0576053330%
TX1029	Pharr City, Texas	0.0964806670%
TX1030	Pilot Point City, Texas	0.0077420000%
TX1031	Pine Forest City, Texas	0.0025960000%
TX1032	Pine Island Town, Texas	0.0020940000%
TX1033	Pinehurst City, Texas	0.0217806670%
TX1034	Pineland City, Texas	0.0027586670%
TX1035	Piney Point Village City, Texas	0.0104920000%
TX1036	Pittsburg City, Texas	0.0136840000%
TX1037	Plains Town, Texas	0.0000860000%
TX1038	Plainview City, Texas	0.0401986670%
TX1039	Plano City, Texas	0.7677386670%
TX1040	Pleak Village, Texas	0.0001800000%
TX1041	Pleasant Valley Town, Texas	0.0002053330%
TX1042	Pleasanton City, Texas	0.0193406670%
TX1043	Plum Grove City, Texas	0.0001720000%
TX1044	Point Blank City, Texas	0.0002366670%
TX1045	Point City, Texas	0.0010126670%
TX1046	Point Comfort City, Texas	0.0002980000%
TX1047	Point Venture Village, Texas	0.0003920000%
TX1048	Polk County, Texas	0.2472206670%
TX1049	Ponder Town, Texas	0.0008546670%
TX1050	Port Aransas City, Texas	0.0206813330%
TX1051	Port Arthur City, Texas	0.2452966670%
TX1052	Port Isabel City, Texas	0.0065346670%
TX1053	Port Lavaca City, Texas	0.0078346670%
TX1054	Port Neches City, Texas	0.0258993330%
TX1055	Portland City, Texas	0.0510113330%
TX1056	Post City, Texas	0.0015546670%
TX1057	Post Oak Bend City Town, Texas	0.0006893330%
TX1058	Poteet City, Texas	0.0045113330%
TX1059	Poth Town, Texas	0.0026493330%
TX1060	Potter County, Texas	0.2478006670%
TX1061	Pottsboro Town, Texas	0.0082013330%
TX1062	Powell Town, Texas	0.0000733330%
TX1063	Poynor Town, Texas	0.0007866670%
TX1064	Prairie View City, Texas	0.0050666670%
TX1065	Premont City, Texas	0.0022140000%
TX1066	Presidio City, Texas	0.0000986670%
TX1067	Presidio County, Texas	0.0005246670%
TX1068	Primera Town, Texas	0.0019720000%
TX1069	Princeton City, Texas	0.0128300000%
TX1070	Progreso City, Texas	0.0053813330%
TX1071	Progreso Lakes City, Texas	0.0000260000%
TX1072	Prosper Town, Texas	0.0151800000%
TX1073	Providence Village Town, Texas	0.0003386670%

State ID	Qualifying Subdivision	Consolidated State Allocation
TX1074	Putnam Town, Texas	0.0000093330%
TX1075	Pyote Town, Texas	0.0000146670%
TX1076	Quanah City, Texas	0.0001380000%
TX1077	Queen City, Texas	0.0032246670%
TX1078	Quinlan City, Texas	0.0048693330%
TX1079	Quintana Town, Texas	0.0003280000%
TX1080	Quitaque City, Texas	0.0000053330%
TX1081	Quitman City, Texas	0.0104126670%
TX1082	Rains County, Texas	0.0354600000%
TX1083	Ralls City, Texas	0.0026446670%
TX1084	Rancho Viejo Town, Texas	0.0025573330%
TX1085	Randall County, Texas	0.1854173330%
TX1086	Ranger City, Texas	0.0081240000%
TX1087	Rankin City, Texas	0.0010753330%
TX1088	Ransom Canyon Town, Texas	0.0006200000%
TX1089	Ravenna City, Texas	0.0004566670%
TX1090	Raymondville City, Texas	0.0049773330%
TX1091	Reagan County, Texas	0.0168100000%
TX1092	Real County, Texas	0.0033820000%
TX1093	Red Lick City, Texas	0.0000153330%
TX1094	Red Oak City, Texas	0.0178953330%
TX1095	Red River County, Texas	0.0195373330%
TX1096	Redwater City, Texas	0.0007053330%
TX1097	Reeves County, Texas	0.0689000000%
TX1098	Refugio County, Texas	0.0308106670%
TX1099	Refugio Town, Texas	0.0058926670%
TX1100	Reklaw City, Texas	0.0007573330%
TX1101	Reno City, Lamar County, Texas	0.0074426670%
TX1102	Reno City, Parker County, Texas	0.0025273330%
TX1103	Retreat Town, Texas	0.0000346670%
TX1104	Rhome City, Texas	0.0081900000%
TX1105	Rice City, Texas	0.0013146670%
TX1106	Richardson City, Texas	0.1735433330%
TX1107	Richland Hills City, Texas	0.0162920000%
TX1108	Richland Springs Town, Texas	0.0014893330%
TX1109	Richland Town, Texas	0.0001400000%
TX1110	Richmond City, Texas	0.0517373330%
TX1111	Richwood City, Texas	0.0080746670%
TX1112	Riesel City, Texas	0.0007453330%
TX1113	Rio Bravo City, Texas	0.0056986670%
TX1114	Rio Grande City, Texas	0.0172980000%
TX1115	Rio Hondo City, Texas	0.0023666670%
TX1116	Rio Vista City, Texas	0.0029460000%
TX1117	Rising Star Town, Texas	0.0012886670%
TX1118	River Oaks City, Texas	0.0079446670%
TX1119	Riverside City, Texas	0.0005720000%
TX1120	Roanoke City, Texas	0.0001833330%
TX1121	Roaring Springs Town, Texas	0.0003073330%
TX1122	Robert Lee City, Texas	0.0000566670%

State ID	Qualifying Subdivision	Consolidated State Allocation
TX1123	Roberts County, Texas	0.0003646670%
TX1124	Robertson County, Texas	0.0297613330%
TX1125	Robinson City, Texas	0.0120013330%
TX1126	Robstown City, Texas	0.0267693330%
TX1127	Roby City, Texas	0.0002853330%
TX1128	Rochester Town, Texas	0.0004493330%
TX1129	Rockdale City, Texas	0.0139820000%
TX1130	Rockport City, Texas	0.0361686670%
TX1131	Rocksprings Town, Texas	0.0000166670%
TX1132	Rockwall City, Texas	0.0762053330%
TX1133	Rockwall County, Texas	0.1125466670%
TX1134	Rocky Mound Town, Texas	0.0001866670%
TX1135	Rogers Town, Texas	0.0025453330%
TX1136	Rollingwood City, Texas	0.0031693330%
TX1137	Roma City, Texas	0.0110860000%
TX1138	Roman Forest Town, Texas	0.0057400000%
TX1139	Ropesville City, Texas	0.0014146670%
TX1140	Roscoe City, Texas	0.0005186670%
TX1141	Rose City, Texas	0.0026746670%
TX1142	Rose Hill Acres City, Texas	0.0015406670%
TX1143	Rosebud City, Texas	0.0009926670%
TX1144	Rosenberg City, Texas	0.0843953330%
TX1145	Ross City, Texas	0.0000980000%
TX1146	Rosser Village, Texas	0.0003660000%
TX1147	Rotan City, Texas	0.0009953330%
TX1148	Round Mountain Town, Texas	0.0003026670%
TX1149	Round Rock City, Texas	0.3173280000%
TX1150	Round Top Town, Texas	0.0000933330%
TX1151	Rowlett City, Texas	0.0666420000%
TX1152	Roxton City, Texas	0.0000313330%
TX1153	Royse City, Texas	0.0156626670%
TX1154	Rule Town, Texas	0.0005333330%
TX1155	Runaway Bay City, Texas	0.0046206670%
TX1156	Runge Town, Texas	0.0001700000%
TX1157	Runnels County, Texas	0.0225540000%
TX1158	Rusk City, Texas	0.0119940000%
TX1159	Rusk County, Texas	0.1009266670%
TX1160	Sabinal City, Texas	0.0012073330%
TX1161	Sabine County, Texas	0.0309860000%
TX1162	Sachse City, Texas	0.0156000000%
TX1163	Sadler City, Texas	0.0006166670%
TX1164	Saginaw City, Texas	0.0213153330%
TX1165	Salado Village, Texas	0.0021400000%
TX1166	San Angelo City, Texas	0.3576726670%
TX1167	San Antonio City, Texas	2.9102773330%
TX1168	San Augustine City, Texas	0.0167880000%
TX1169	San Augustine County, Texas	0.0252360000%
TX1170	San Benito City, Texas	0.0266766670%
TX1171	San Diego City, Texas	0.0078473330%

State ID	Qualifying Subdivision	Consolidated State Allocation
TX1172	San Elizario City, Texas	0.0052206670%
TX1173	San Felipe Town, Texas	0.0009986670%
TX1174	San Jacinto County, Texas	0.1315986670%
TX1175	San Juan City, Texas	0.0192300000%
TX1176	San Leanna Village, Texas	0.0000240000%
TX1177	San Marcos City, Texas	0.2171253330%
TX1178	San Patricio City, Texas	0.0028086670%
TX1179	San Patricio County, Texas	0.1812773330%
TX1180	San Perlita City, Texas	0.0014793330%
TX1181	San Saba City, Texas	0.0067046670%
TX1182	San Saba County, Texas	0.0117080000%
TX1183	Sanctuary Town, Texas	0.0000113330%
TX1184	Sandy Oaks City, Texas	0.0065753330%
TX1185	Sandy Point City, Texas	0.0010913330%
TX1186	Sanford Town, Texas	0.0002053330%
TX1187	Sanger City, Texas	0.0148246670%
TX1188	Sansom Park City, Texas	0.0001486670%
TX1189	Santa Anna Town, Texas	0.0002193330%
TX1190	Santa Clara City, Texas	0.0000580000%
TX1191	Santa Fe City, Texas	0.0221813330%
TX1192	Santa Rosa Town, Texas	0.0014253330%
TX1193	Savoy City, Texas	0.0015660000%
TX1194	Schertz City, Texas	0.0400733330%
TX1195	Schleicher County, Texas	0.0037966670%
TX1196	Schulenburg City, Texas	0.0017066670%
TX1197	Scotland City, Texas	0.0000986670%
TX1198	Scottsville City, Texas	0.0004720000%
TX1199	Scurry County, Texas	0.0487440000%
TX1200	Scurry Town, Texas	0.0007400000%
TX1201	Seabrook City, Texas	0.0201800000%
TX1202	Seadrift City, Texas	0.0006606670%
TX1203	Seagoville City, Texas	0.0114040000%
TX1204	Seagraves City, Texas	0.0050206670%
TX1205	Sealy City, Texas	0.0137580000%
TX1206	Seguin City, Texas	0.2510253330%
TX1207	Selma City, Texas	0.0149526670%
TX1208	Seminole City, Texas	0.0107280000%
TX1209	Seven Oaks City, Texas	0.0026113330%
TX1210	Seven Points City, Texas	0.0049680000%
TX1211	Seymour City, Texas	0.0094786670%
TX1212	Shackelford County, Texas	0.0008586670%
TX1213	Shady Shores Town, Texas	0.0003960000%
TX1214	Shallowater City, Texas	0.0012713330%
TX1215	Shamrock City, Texas	0.0028853330%
TX1216	Shavano Park City, Texas	0.0021186670%
TX1217	Shelby County, Texas	0.0732833330%
TX1218	Shenandoah City, Texas	0.0314146670%
TX1219	Shepherd City, Texas	0.0000980000%
TX1220	Sherman City, Texas	0.2203900000%

State ID	Qualifying Subdivision	Consolidated State Allocation
TX1221	Sherman County, Texas	0.0052866670%
TX1222	Shiner City, Texas	0.0026946670%
TX1223	Shoreacres City, Texas	0.0006386670%
TX1224	Silsbee City, Texas	0.0442946670%
TX1225	Silverton City, Texas	0.0000093330%
TX1226	Simonton City, Texas	0.0012706670%
TX1227	Sinton City, Texas	0.0157720000%
TX1228	Skellytown, Texas	0.0002666670%
TX1229	Slaton City, Texas	0.0001026670%
TX1230	Smiley City, Texas	0.0004366670%
TX1231	Smith County, Texas	0.5059740000%
TX1232	Smithville City, Texas	0.0113393330%
TX1233	Smyer Town, Texas	0.0002000000%
TX1234	Snook City, Texas	0.0009480000%
TX1235	Snyder City, Texas	0.0060120000%
TX1236	Socorro City, Texas	0.0074166670%
TX1237	Somerset City, Texas	0.0010180000%
TX1238	Somervell County, Texas	0.0380506670%
TX1239	Somerville City, Texas	0.0025373330%
TX1240	Sonora City, Texas	0.0048913330%
TX1241	Sour Lake City, Texas	0.0119040000%
TX1242	South Houston City, Texas	0.0170800000%
TX1243	South Mountain Town, Texas	0.0001026670%
TX1244	South Padre Island Town, Texas	0.0204193330%
TX1245	Southlake City, Texas	0.0472306670%
TX1246	Southmayd City, Texas	0.0047306670%
TX1247	Southside Place City, Texas	0.0005900000%
TX1248	Spearman City, Texas	0.0093333330%
TX1249	Splendora City, Texas	0.0051706670%
TX1250	Spofford City, Texas	0.0000046670%
TX1251	Spring Valley Village City, Texas	0.0109360000%
TX1252	Springlake Town, Texas	0.0000020000%
TX1253	Springtown City, Texas	0.0094960000%
TX1254	Spur City, Texas	0.0002846670%
TX1255	St. Hedwig Town, Texas	0.0000740000%
TX1256	St. Jo City, Texas	0.0049066670%
TX1257	St. Paul Town, Texas	0.0000140000%
TX1258	Stafford City, Texas	0.0500966670%
TX1259	Stagecoach Town, Texas	0.0020240000%
TX1260	Stamford City, Texas	0.0002653330%
TX1261	Stanton City, Texas	0.0025586670%
TX1262	Staples City, Texas	0.0000126670%
TX1263	Star Harbor City, Texas	0.0001006670%
TX1264	Starr County, Texas	0.0665973330%
TX1265	Stephens County, Texas	0.0234960000%
TX1266	Stephenville City, Texas	0.0556480000%
TX1267	Sterling City, Texas	0.0000413330%
TX1268	Sterling County, Texas	0.0006260000%
TX1269	Stinnett City, Texas	0.0027313330%

State ID	Qualifying Subdivision	Consolidated State Allocation
TX1270	Stockdale City, Texas	0.0004940000%
TX1271	Stonewall County, Texas	0.0012146670%
TX1272	Stratford City, Texas	0.0055853330%
TX1273	Strawn City, Texas	0.0006580000%
TX1274	Streetman Town, Texas	0.0000033330%
TX1275	Sudan City, Texas	0.0000213330%
TX1276	Sugar Land City, Texas	0.2143740000%
TX1277	Sullivan City, Texas	0.0040806670%
TX1278	Sulphur Springs City, Texas	0.0830686670%
TX1279	Sun Valley City, Texas	0.0000026670%
TX1280	Sundown City, Texas	0.0017280000%
TX1281	Sunnyvale Town, Texas	0.0021653330%
TX1282	Sunray City, Texas	0.0017140000%
TX1283	Sunrise Beach Village City, Texas	0.0013886670%
TX1284	Sunset Valley City, Texas	0.0062833330%
TX1285	Surfside Beach City, Texas	0.0043533330%
TX1286	Sutton County, Texas	0.0043606670%
TX1287	Sweeny City, Texas	0.0030020000%
TX1288	Sweetwater City, Texas	0.0454986670%
TX1289	Swisher County, Texas	0.0048340000%
TX1290	Taft City, Texas	0.0039073330%
TX1291	Tahoka City, Texas	0.0002866670%
TX1292	Talco City, Texas	0.0002480000%
TX1293	Talty Town, Texas	0.0060826670%
TX1294	Tarrant County, Texas	4.1141060000%
TX1295	Tatum City, Texas	0.0006480000%
TX1296	Taylor City, Texas	0.0386300000%
TX1297	Taylor County, Texas	0.2340520000%
TX1298	Taylor Lake Village City, Texas	0.0002746670%
TX1299	Taylor Landing City, Texas	0.0001020000%
TX1300	Teague City, Texas	0.0011426670%
TX1301	Tehuacana Town, Texas	0.0000080000%
TX1302	Temple City, Texas	0.1871646670%
TX1303	Tenaha Town, Texas	0.0031453330%
TX1304	Terrell City, Texas	0.0991373330%
TX1305	Terrell County, Texas	0.0038246670%
TX1306	Terrell Hills City, Texas	0.0065720000%
TX1307	Terry County, Texas	0.0169486670%
TX1308	Texarkana City, Texas	0.1280626670%
TX1309	Texas City, Texas	0.1991346670%
TX1310	Texhoma City, Texas	0.0001040000%
TX1311	Texline Town, Texas	0.0005766670%
TX1312	The Colony City, Texas	0.0761980000%
TX1313	The Hills Village, Texas	0.0006693330%
TX1314	Thompsons Town, Texas	0.0012646670%
TX1315	Thorndale City, Texas	0.0010633330%
TX1316	Thornton Town, Texas	0.0001800000%
TX1317	Thorntonville Town, Texas	0.0000580000%
TX1318	Thrall City, Texas	0.0005500000%

State ID	Qualifying Subdivision	Consolidated State Allocation
TX1319	Three Rivers City, Texas	0.0031126670%
TX1320	Throckmorton County, Texas	0.0037966670%
TX1321	Throckmorton Town, Texas	0.0000193330%
TX1322	Tiki Island Village, Texas	0.0014520000%
TX1323	Timbercreek Canyon Village, Texas	0.0002460000%
TX1324	Timpson City, Texas	0.0084280000%
TX1325	Tioga Town, Texas	0.0015933330%
TX1326	Tira Town, Texas	0.0001233330%
TX1327	Titus County, Texas	0.0470740000%
TX1328	Toco City, Texas	0.0000026670%
TX1329	Todd Mission City, Texas	0.0011200000%
TX1330	Tolar City, Texas	0.0015793330%
TX1331	Tom Bean City, Texas	0.0015286670%
TX1332	Tom Green County, Texas	0.1882846670%
TX1333	Tomball City, Texas	0.0230800000%
TX1334	Tool City, Texas	0.0098580000%
TX1335	Toyah Town, Texas	0.0000266670%
TX1336	Travis County, Texas	3.1356486670%
TX1337	Trent Town, Texas	0.0000420000%
TX1338	Trenton City, Texas	0.0020593330%
TX1339	Trinidad City, Texas	0.0039060000%
TX1340	Trinity City, Texas	0.0157680000%
TX1341	Trinity County, Texas	0.0705106670%
TX1342	Trophy Club Town, Texas	0.0195800000%
TX1343	Troup City, Texas	0.0052786670%
TX1344	Troy City, Texas	0.0035466670%
TX1345	Tulia City, Texas	0.0059406670%
TX1346	Turkey City, Texas	0.0004913330%
TX1347	Tuscola City, Texas	0.0000920000%
TX1348	Tye City, Texas	0.0011773330%
TX1349	Tyler City, Texas	0.4825526670%
TX1350	Tyler County, Texas	0.0878286670%
TX1351	Uhland City, Texas	0.0010300000%
TX1352	Uncertain City, Texas	0.0001233330%
TX1353	Union Grove City, Texas	0.0006626670%
TX1354	Union Valley City, Texas	0.0004440000%
TX1355	Universal City, Texas	0.0189520000%
TX1356	University Park City, Texas	0.0338886670%
TX1357	Upshur County, Texas	0.0855333330%
TX1358	Upton County, Texas	0.0056660000%
TX1359	Uvalde City, Texas	0.0122926670%
TX1360	Uvalde County, Texas	0.0241626670%
TX1361	Val Verde County, Texas	0.0785433330%
TX1362	Valentine Town, Texas	0.0001380000%
TX1363	Valley Mills City, Texas	0.0014853330%
TX1364	Valley View City, Texas	0.0012160000%
TX1365	Van Alstyne City, Texas	0.0291660000%
TX1366	Van City, Texas	0.0041373330%

State ID	Qualifying Subdivision	Consolidated State Allocation
TX1367	Van Horn Town, Texas	0.0001406670%
TX1368	Van Zandt County, Texas	0.1658313330%
TX1369	Vega City, Texas	0.0006493330%
TX1370	Venus Town, Texas	0.0065280000%
TX1371	Vernon City, Texas	0.0542246670%
TX1372	Victoria City, Texas	0.0563986670%
TX1373	Victoria County, Texas	0.3472573330%
TX1374	Vidor City, Texas	0.0637466670%
TX1375	Vinton Village, Texas	0.0004146670%
TX1376	Volente Village, Texas	0.0002220000%
TX1377	Von Ormy City, Texas	0.0003420000%
TX1378	Waco City, Texas	0.3413380000%
TX1379	Waelder City, Texas	0.0022846670%
TX1380	Wake Village City, Texas	0.0001160000%
TX1381	Walker County, Texas	0.1230826670%
TX1382	Waller City, Texas	0.0075300000%
TX1383	Waller County, Texas	0.0841373330%
TX1384	Wallis City, Texas	0.0017986670%
TX1385	Walnut Springs City, Texas	0.0001220000%
TX1386	Ward County, Texas	0.0452800000%
TX1387	Warren City, Texas	0.0000440000%
TX1388	Washington County, Texas	0.0558180000%
TX1389	Waskom City, Texas	0.0035640000%
TX1390	Watauga City, Texas	0.0221440000%
TX1391	Waxahachie City, Texas	0.1013960000%
TX1392	Weatherford City, Texas	0.1385813330%
TX1393	Webb County, Texas	0.3368693330%
TX1394	Webberville Village, Texas	0.0008533330%
TX1395	Webster City, Texas	0.0354680000%
TX1396	Weimar City, Texas	0.0038866670%
TX1397	Weinert City, Texas	0.0001560000%
TX1398	Weir City, Texas	0.0002953330%
TX1399	Wellington City, Texas	0.0060740000%
TX1400	Wellman City, Texas	0.0002553330%
TX1401	Wells Town, Texas	0.0009046670%
TX1402	Weslaco City, Texas	0.0492993330%
TX1403	West City, Texas	0.0023480000%
TX1404	West Columbia City, Texas	0.0119720000%
TX1405	West Lake Hills City, Texas	0.0113706670%
TX1406	West Orange City, Texas	0.0283013330%
TX1407	West Tawakoni City, Texas	0.0046633330%
TX1408	West University Place City, Texas	0.0231146670%
TX1409	Westbrook City, Texas	0.0000286670%
TX1410	Westlake Town, Texas	0.0276933330%
TX1411	Weston City, Texas	0.0001773330%
TX1412	Weston Lakes City, Texas	0.0001260000%
TX1413	Westover Hills Town, Texas	0.0030060000%
TX1414	Westworth Village City, Texas	0.0052280000%
TX1415	Wharton City, Texas	0.0211333330%

State ID	Qualifying Subdivision	Consolidated State Allocation
TX1416	Wharton County, Texas	0.0485913330%
TX1417	Wheeler City, Texas	0.0002980000%
TX1418	Wheeler County, Texas	0.0175153330%
TX1419	White Deer Town, Texas	0.0008486670%
TX1420	White Oak City, Texas	0.0102033330%
TX1421	White Settlement City, Texas	0.0155360000%
TX1422	Whiteface Town, Texas	0.0001033330%
TX1423	Whitehouse City, Texas	0.0193446670%
TX1424	Whitesboro City, Texas	0.0126213330%
TX1425	Whitewright Town, Texas	0.0047320000%
TX1426	Whitney Town, Texas	0.0000486670%
TX1427	Wichita County, Texas	0.3682473330%
TX1428	Wichita Falls City, Texas	0.5550493330%
TX1429	Wickett Town, Texas	0.0000580000%
TX1430	Wilbarger County, Texas	0.0367493330%
TX1431	Willacy County, Texas	0.0163873330%
TX1432	Williamson County, Texas	0.7973246670%
TX1433	Willis City, Texas	0.0162560000%
TX1434	Willow Park City, Texas	0.0178246670%
TX1435	Wills Point City, Texas	0.0291766670%
TX1436	Wilmer City, Texas	0.0002840000%
TX1437	Wilson City, Texas	0.0000080000%
TX1438	Wilson County, Texas	0.0806893330%
TX1439	Wimberley City, Texas	0.0004826670%
TX1440	Windcrest City, Texas	0.0086053330%
TX1441	Windom Town, Texas	0.0007246670%
TX1442	Windthorst Town, Texas	0.0022566670%
TX1443	Winfield City, Texas	0.0001933330%
TX1444	Wink City, Texas	0.0000800000%
TX1445	Winkler County, Texas	0.0407753330%
TX1446	Winnsboro City, Texas	0.0191940000%
TX1447	Winona Town, Texas	0.0002126670%
TX1448	Winters City, Texas	0.0041526670%
TX1449	Wise County, Texas	0.1927160000%
TX1450	Wixon Valley City, Texas	0.0002940000%
TX1451	Wolfe City, Texas	0.0036440000%
TX1452	Wolfforth City, Texas	0.0026813330%
TX1453	Wood County, Texas	0.1780320000%
TX1454	Woodbranch City, Texas	0.0064113330%
TX1455	Woodcreek City, Texas	0.0002386670%
TX1456	Woodloch Town, Texas	0.0006746670%
TX1457	Woodsboro Town, Texas	0.0007533330%
TX1458	Woodson Town, Texas	0.0000813330%
TX1459	Woodville Town, Texas	0.0135600000%
TX1460	Woodway City, Texas	0.0171420000%
TX1461	Wortham Town, Texas	0.0002506670%
TX1462	Wylie City, Texas	0.0764720000%
TX1463	Yantis Town, Texas	0.0013813330%
TX1464	Yoakum City, Texas	0.0134733330%

State ID	Qualifying Subdivision	Consolidated State Allocation
TX1465	Yoakum County, Texas	0.0232826670%
TX1466	Yorktown City, Texas	0.0036313330%
TX1467	Young County, Texas	0.0294133330%
TX1468	Zapata County, Texas	0.0376533330%
TX1469	Zavala County, Texas	0.0254313330%
TX1470	Zavalla City, Texas	0.0007253330%

State ID	Qualifying Subdivision	Consolidated State Allocation
UT3	Beaver County, Utah	0.2280000000%
UT6	Box Elder County, Utah	1.4640000000%
UT8	Cache County, Utah	2.6490000000%
UT9	Carbon County, Utah	2.7180000000%
UT16	Daggett County, Utah	0.0280000000%
UT17	Davis County, Utah	8.6950000000%
UT19	Duchesne County, Utah	0.6410000000%
UT21	Emery County, Utah	0.9380000000%
UT23	Garfield County, Utah	0.1470000000%
UT24	Grand County, Utah	0.3040000000%
UT31	Iron County, Utah	1.6220000000%
UT32	Juab County, Utah	0.3520000000%
UT33	Kane County, Utah	0.4390000000%
UT41	Millard County, Utah	0.3550000000%
UT42	Morgan County, Utah	0.2160000000%
UT50	Piute County, Utah	0.0220000000%
UT54	Rich County, Utah	0.0610000000%
UT58	Salt Lake County, Utah	42.2710000000%
UT59	San Juan County, Utah	0.2490000000%
UT61	Sanpete County, Utah	1.0130000000%
UT64	Sevier County, Utah	0.6610000000%
UT72	Summit County, Utah	0.9440000000%
UT76	Tooele County, Utah	2.2330000000%
UT77	Uintah County, Utah	0.8660000000%
UT78	Utah County, Utah	15.4260000000%
UT81	Wasatch County, Utah	0.6010000000%
UT83	Washington County, Utah	4.8650000000%
UT84	Wayne County, Utah	0.1090000000%
UT85	Weber County, Utah	9.8830000000%

State ID	Qualifying Subdivision	Consolidated State Allocation
VT1	Addison County, Vermont	0.7355948910%
VT2	Albany Town, Vermont	0.0345075405%
VT3	Albany Village, Vermont	0.0160668267%
VT4	Alburgh Town, Vermont	0.0606145322%
VT5	Alburgh Village, Vermont	0.0525580527%
VT6	Andover Town, Vermont	0.0012398034%
VT7	Arlington Town, Vermont	0.0885559202%
VT8	Athens Town, Vermont	0.0006484140%
VT9	Bakersfield Town, Vermont	0.0549127180%
VT10	Baltimore Town, Vermont	0.0024796068%
VT11	Barnard Town, Vermont	0.0830636232%
VT12	Barnet Town, Vermont	0.0471074029%
VT13	Barre City, Vermont	2.1256028600%
VT14	Barre Town, Vermont	1.3320832015%
VT15	Barton Town, Vermont	0.3252065150%
VT16	Barton Village, Vermont	0.0324162133%
VT17	Bellows Falls Village, Vermont	0.9422159742%
VT18	Belvidere Town, Vermont	0.0049931720%
VT19	Bennington County, Vermont	0.9901518348%
VT20	Bennington Town, Vermont	2.4851413569%
VT21	Benson Town, Vermont	0.0225970986%
VT22	Berlin Town, Vermont	0.5526473249%
VT23	Bethel Town, Vermont	0.0892626402%
VT24	Bloomfield Town, Vermont	0.0119245379%
VT25	Bolton Town, Vermont	0.1874031696%
VT26	Bradford Town, Vermont	0.7724442824%
VT27	Braintree Town, Vermont	0.0619908100%
VT28	Brandon Town, Vermont	0.5039156835%
VT29	Brattleboro Town, Vermont	2.8616648398%
VT30	Bridgewater Town, Vermont	0.2045592293%
VT31	Bridport Town, Vermont	0.0525426753%
VT32	Brighton Town, Vermont	0.1371312246%
VT33	Bristol Town, Vermont	0.4536168281%
VT34	Brookfield Town, Vermont	0.0181094589%
VT35	Brookline Town, Vermont	0.0142663887%
VT36	Brownington Town, Vermont	0.0209132726%
VT37	Brunswick Town, Vermont	0.0071549790%
VT38	Burke Town, Vermont	0.0035553845%
VT39	Burlington City, Vermont	10.6984139884%
VT40	Cabot Town, Vermont	0.0223388863%
VT41	Calais Town, Vermont	0.0461347819%
VT42	Caledonia County, Vermont	0.8505961058%
VT43	Cambridge Town, Vermont	0.0682410850%
VT44	Cambridge Village, Vermont	0.0012481328%
VT45	Canaan Town, Vermont	0.1359388349%
VT46	Castleton Town, Vermont	0.4255786906%
VT47	Cavendish Town, Vermont	0.0216955982%
VT48	Charleston Town, Vermont	0.0460098405%
VT49	Charlotte Town, Vermont	0.2587947007%

State ID	Qualifying Subdivision	Consolidated State Allocation
VT50	Chelsea Town, Vermont	0.0097511978%
VT51	Chester Town, Vermont	0.3719262791%
VT52	Chittenden County, Vermont	0.6721150355%
VT53	Chittenden Town, Vermont	0.0203372606%
VT54	Clarendon Town, Vermont	0.0632716198%
VT55	Colchester Town, Vermont	2.5489633597%
VT56	Concord Town, Vermont	0.0166940968%
VT57	Corinth Town, Vermont	0.0626872784%
VT58	Cornwall Town, Vermont	0.0577966224%
VT59	Coventry Town, Vermont	0.0376445314%
VT60	Craftsbury Town, Vermont	0.0501924950%
VT61	Danby Town, Vermont	0.0082858591%
VT62	Danville Town, Vermont	0.0302198071%
VT63	Derby Center Village, Vermont	0.0488117321%
VT64	Derby Line Village, Vermont	0.0549242511%
VT65	Derby Town, Vermont	0.5855806035%
VT66	Dorset Town, Vermont	0.0697288490%
VT67	Dover Town, Vermont	0.6426262960%
VT68	Dummerston Town, Vermont	0.0577133282%
VT69	East Haven Town, Vermont	0.0107321482%
VT70	East Montpelier Town, Vermont	0.1121807421%
VT71	Eden Town, Vermont	0.0299596726%
VT72	Elmore Town, Vermont	0.0195568572%
VT73	Enosburg Falls Village, Vermont	0.0515847910%
VT74	Enosburgh Town, Vermont	0.0873609676%
VT75	Essex County, Vermont	0.3791972294%
VT76	Essex Junction Village, Vermont	0.1451319610%
VT77	Essex Town, Vermont	1.8402135758%
VT78	Fair Haven Town, Vermont	0.3879168595%
VT79	Fairfax Town, Vermont	0.1256334098%
VT80	Fairfield Town, Vermont	0.0981770508%
VT81	Fairlee Town, Vermont	0.0592042959%
VT82	Fayston Town, Vermont	0.0053417265%
VT83	Ferrisburgh Town, Vermont	0.1296046250%
VT84	Fletcher Town, Vermont	0.0216321664%
VT85	Franklin County, Vermont	1.4110871894%
VT86	Franklin Town, Vermont	0.0432643327%
VT87	Georgia Town, Vermont	0.2512668196%
VT88	Goshen Town, Vermont	0.0148872515%
VT89	Grafton Town, Vermont	0.0220479971%
VT90	Grand Isle County, Vermont	0.4312958821%
VT91	Grand Isle Town, Vermont	0.1561992085%
VT92	Granville Town, Vermont	0.0131355086%
VT93	Greensboro Town, Vermont	0.2645567430%
VT94	Groton Town, Vermont	0.0719938128%
VT95	Guildhall Town, Vermont	0.0155017070%
VT96	Guilford Town, Vermont	0.0032420698%
VT97	Halifax Town, Vermont	0.0155632167%
VT98	Hancock Town, Vermont	0.0534179060%

State ID	Qualifying Subdivision	Consolidated State Allocation
VT99	Hardwick Town, Vermont	0.7839350493%
VT100	Hartford Town, Vermont	3.2053851113%
VT101	Hartland Town, Vermont	0.0483504099%
VT102	Highgate Town, Vermont	0.2362905072%
VT103	Hinesburg Town, Vermont	0.2869757200%
VT104	Holland Town, Vermont	0.0010456636%
VT105	Hubbardton Town, Vermont	0.0632716198%
VT106	Huntington Town, Vermont	0.0422712086%
VT107	Hyde Park Town, Vermont	0.0374497510%
VT108	Hyde Park Village, Vermont	0.0025481644%
VT109	Ira Town, Vermont	0.0067788733%
VT110	Irasburg Town, Vermont	0.0909740173%
VT111	Isle La Motte Town, Vermont	0.0520666164%
VT112	Jacksonville Village, Vermont	0.0061977355%
VT113	Jamaica Town, Vermont	0.0259384809%
VT114	Jay Town, Vermont	0.0031369909%
VT115	Jeffersonville Village, Vermont	0.0039462269%
VT116	Jericho Town, Vermont	0.0422712086%
VT117	Johnson Town, Vermont	0.2812873611%
VT118	Johnson Village, Vermont	0.1616364031%
VT119	Killington Town, Vermont	0.2124125988%
VT120	Kirby Town, Vermont	0.0008886859%
VT121	Lamoille County, Vermont	1.1151624597%
VT122	Landgrove Town, Vermont	0.0125511672%
VT123	Leicester Town, Vermont	0.0481639588%
VT124	Lincoln Town, Vermont	0.0718080025%
VT125	Londonderry Town, Vermont	0.0382589870%
VT126	Lowell Town, Vermont	0.0481011678%
VT127	Ludlow Town, Vermont	0.7209171567%
VT128	Ludlow Village, Vermont	0.2940730337%
VT129	Lunenburg Town, Vermont	0.0965880521%
VT130	Lyndon Town, Vermont	0.4559618826%
VT131	Lyndonville Village, Vermont	0.0079994549%
VT132	Maidstone Town, Vermont	0.0214642963%
VT133	Manchester Town, Vermont	0.6972897719%
VT134	Manchester Village, Vermont	0.0076701221%
VT135	Marlboro Town, Vermont	0.0129695608%
VT136	Marshfield Town, Vermont	0.0174828296%
VT137	Marshfield Village, Vermont	0.0171445266%
VT138	Mendon Town, Vermont	0.0971672678%
VT139	Middlebury Town, Vermont	1.3520936922%
VT140	Middlesex Town, Vermont	0.0165114901%
VT141	Middletown Springs Town, Vermont	0.0587525845%
VT142	Milton Town, Vermont	0.9332579943%
VT143	Monkton Town, Vermont	0.0210170701%
VT144	Montgomery Town, Vermont	0.0432643327%
VT145	Montpelier City, Vermont	2.1358012840%
VT146	Moretown, Vermont	0.0140831413%

State ID	Qualifying Subdivision	Consolidated State Allocation
VT147	Morgan Town, Vermont	0.0271878951%
VT148	Morristown, Vermont	0.5887893556%
VT149	Morrisville Village, Vermont	0.2266450291%
VT150	Mount Holly Town, Vermont	0.0918947396%
VT151	Mount Tabor Town, Vermont	0.0241034437%
VT152	New Haven Town, Vermont	0.1313563678%
VT153	Newbury Town, Vermont	0.0536325490%
VT154	Newbury Village, Vermont	0.0020894051%
VT155	Newfane Town, Vermont	0.0603069840%
VT156	Newfane Village, Vermont	0.0032420698%
VT157	Newport City, Vermont	1.2443589426%
VT158	Newport Town, Vermont	0.5761696308%
VT159	North Bennington Village, Vermont	0.1073823506%
VT160	North Hero Town, Vermont	0.0916986776%
VT161	North Troy Village, Vermont	0.0345075405%
VT162	Northfield Town, Vermont	0.5366215046%
VT163	Norton Town, Vermont	0.0131169276%
VT164	Norwich Town, Vermont	0.4866039276%
VT165	Old Bennington Village, Vermont	0.0014256137%
VT166	Orange County, Vermont	0.5836866196%
VT167	Orange Town, Vermont	0.0271641883%
VT168	Orleans County, Vermont	0.4475510820%
VT169	Orleans Village, Vermont	0.1150249216%
VT170	Orwell Town, Vermont	0.0350284502%
VT171	Panton Town, Vermont	0.0402823974%
VT172	Pawlet Town, Vermont	0.0497138732%
VT173	Peacham Town, Vermont	0.0373299353%
VT174	Perkinsville Village, Vermont	0.0463135443%
VT175	Peru Town, Vermont	0.0034861862%
VT176	Pittsfield Town, Vermont	0.0090387113%
VT177	Pittsford Town, Vermont	0.2538406130%
VT178	Plainfield Town, Vermont	0.0684736682%
VT179	Plymouth Town, Vermont	0.0681866233%
VT180	Pomfret Town, Vermont	0.0750052216%
VT181	Poultney Town, Vermont	0.1634522185%
VT182	Poultney Village, Vermont	0.3218151562%
VT183	Pownal Town, Vermont	0.1568905511%
VT184	Proctor Town, Vermont	0.1581796903%
VT185	Putney Town, Vermont	0.1348803568%
VT186	Randolph Town, Vermont	1.0482675385%
VT187	Reading Town, Vermont	0.0006195813%
VT188	Readsboro Town, Vermont	0.0495075597%
VT189	Richford Town, Vermont	0.3377954850%
VT190	Richmond Town, Vermont	0.3085809759%
VT191	Ripton Town, Vermont	0.0402823974%
VT192	Rochester Town, Vermont	0.1090982129%
VT193	Rockingham Town, Vermont	0.4824558723%
VT194	Roxbury Town, Vermont	0.0082557450%

State ID	Qualifying Subdivision	Consolidated State Allocation
VT195	Royalton Town, Vermont	0.1989804344%
VT196	Rutland City, Vermont	6.2978142029%
VT197	Rutland County, Vermont	1.5426293676%
VT198	Rutland Town, Vermont	0.3201255637%
VT199	Ryegate Town, Vermont	0.0515514733%
VT200	Salisbury Town, Vermont	0.0271468887%
VT201	Sandgate Town, Vermont	0.0257994435%
VT202	Saxtons River Village, Vermont	0.0156375408%
VT203	Searsburg Town, Vermont	0.0118540581%
VT204	Shaftsbury Town, Vermont	0.0697288490%
VT205	Sharon Town, Vermont	0.1462910330%
VT206	Sheffield Town, Vermont	0.0302198071%
VT207	Shelburne Town, Vermont	0.7838991687%
VT208	Sheldon Town, Vermont	0.1372817951%
VT209	Shoreham Town, Vermont	0.0359043216%
VT210	Shrewsbury Town, Vermont	0.0323893028%
VT211	South Burlington City, Vermont	4.2811506559%
VT212	South Hero Town, Vermont	0.0559519744%
VT213	Springfield Town, Vermont	2.0400160607%
VT214	St Albans Town, Vermont	0.7155280165%
VT215	St George Town, Vermont	0.0117419312%
VT216	St Johnsbury Town, Vermont	1.7171904807%
VT217	St. Albans City, Vermont	3.9012902759%
VT218	Stamford Town, Vermont	0.0495075597%
VT219	Stannard Town, Vermont	0.0017773719%
VT220	Starksboro Town, Vermont	0.0070056900%
VT221	Stockbridge Town, Vermont	0.0737654182%
VT222	Stowe Town, Vermont	0.9395659345%
VT223	Strafford Town, Vermont	0.0821896740%
VT224	Stratton Town, Vermont	0.1614672516%
VT225	Sudbury Town, Vermont	0.0135583873%
VT226	Sunderland Town, Vermont	0.0341673154%
VT227	Sutton Town, Vermont	0.0364412494%
VT228	Swanton Town, Vermont	0.1297936389%
VT229	Swanton Village, Vermont	0.5715903674%
VT230	Thetford Town, Vermont	0.2618926073%
VT231	Tinmouth Town, Vermont	0.0120520422%
VT232	Topsham Town, Vermont	0.0592042959%
VT233	Townshend Town, Vermont	0.0596585701%
VT234	Troy Town, Vermont	0.0365988678%
VT235	Underhill Town, Vermont	0.0897092257%
VT236	Vergennes City, Vermont	1.4746932678%
VT237	Vernon Town, Vermont	0.3196917927%
VT238	Vershire Town, Vermont	0.0006964684%
VT239	Victory Town, Vermont	0.0095397585%
VT240	Waitsfield Town, Vermont	0.0485631307%
VT241	Walden Town, Vermont	0.0071107690%
VT242	Wallingford Town, Vermont	0.0165710775%
VT243	Waltham Town, Vermont	0.0201411987%

State ID	Qualifying Subdivision	Consolidated State Allocation
VT244	Warren Town, Vermont	0.0480774609%
VT245	Washington County, Vermont	0.9081281087%
VT246	Washington Town, Vermont	0.0529360806%
VT247	Waterbury Town, Vermont	0.4584350821%
VT248	Waterford Town, Vermont	0.0577729156%
VT249	Waterville Town, Vermont	0.0004158307%
VT250	Weathersfield Town, Vermont	0.1692264346%
VT251	Wells River Village, Vermont	0.1107474397%
VT252	Wells Town, Vermont	0.0444407043%
VT253	West Burke Village, Vermont	0.0017773719%
VT254	West Fairlee Town, Vermont	0.0090547294%
VT255	West Haven Town, Vermont	0.0090387113%
VT256	West Rutland Town, Vermont	0.1212713522%
VT257	West Windsor Town, Vermont	0.0210760168%
VT258	Westfield Town, Vermont	0.0250965679%
VT259	Westford Town, Vermont	0.0657557117%
VT260	Westminster Town, Vermont	0.0752217867%
VT261	Westminster Village, Vermont	0.0079763888%
VT262	Westmore Town, Vermont	0.0365988678%
VT263	Weston Town, Vermont	0.0291344185%
VT264	Weybridge Town, Vermont	0.0245199151%
VT265	Wheelock Town, Vermont	0.0222203522%
VT266	Whiting Town, Vermont	0.0026269736%
VT267	Whitingham Town, Vermont	0.0901365894%
VT268	Williston Town, Vermont	1.4048183334%
VT269	Wilmington Town, Vermont	0.4344700351%
VT270	Windham County, Vermont	0.7048785219%
VT271	Windham Town, Vermont	0.0155632167%
VT272	Windsor County, Vermont	0.7909631647%
VT273	Windsor Town, Vermont	1.5118803214%
VT274	Winhall Town, Vermont	0.3772340472%
VT275	Winooski City, Vermont	1.3620774732%
VT276	Wolcott Town, Vermont	0.0337047118%
VT277	Woodbury Town, Vermont	0.0267099141%
VT278	Woodford Town, Vermont	0.0383512514%
VT279	Woodstock Town, Vermont	0.5151181240%
VT280	Woodstock Village, Vermont	0.3241960913%
VT281	Worcester Town, Vermont	0.0233102258%

State ID	Qualifying Subdivision	Consolidated State Allocation
VA1	Accomack County, Virginia	0.3480034800%
VA2	Albemarle County, Virginia	0.8630086301%
VA3	Alexandria City, Virginia	1.1620116201%
VA4	Alleghany County, Virginia	0.2130021300%
VA5	Amelia County, Virginia	0.1000010000%
VA6	Amherst County, Virginia	0.2990029900%
VA7	Appomattox County, Virginia	0.1330013300%
VA8	Arlington County, Virginia	1.3780137801%
VA9	Augusta County, Virginia	0.8350083501%
VA10	Bath County, Virginia	0.0370003700%
VA11	Bedford County, Virginia	0.7770077701%
VA12	Bland County, Virginia	0.1470014700%
VA13	Botetourt County, Virginia	0.3620036200%
VA14	Bristol City, Virginia	0.4340043400%
VA15	Brunswick County, Virginia	0.1070010700%
VA16	Buchanan County, Virginia	0.9290092901%
VA17	Buckingham County, Virginia	0.1270012700%
VA18	Buena Vista City, Virginia	0.0780007800%
VA19	Campbell County, Virginia	0.4560045600%
VA20	Caroline County, Virginia	0.3180031800%
VA21	Carroll County, Virginia	0.4400044000%
VA22	Charles City County, Virginia	0.0730007300%
VA23	Charlotte County, Virginia	0.1380013800%
VA24	Charlottesville City, Virginia	0.4630046300%
VA25	Chesapeake City, Virginia	2.9120291203%
VA26	Chesterfield County, Virginia	4.0880408804%
VA27	Clarke County, Virginia	0.1250012500%
VA28	Colonial Heights City, Virginia	0.2830028300%
VA29	Covington City, Virginia	0.1000010000%
VA30	Craig County, Virginia	0.0700007000%
VA31	Culpeper County, Virginia	0.7900079001%
VA32	Cumberland County, Virginia	0.1000010000%
VA33	Danville City, Virginia	0.6370063701%
VA34	Dickenson County, Virginia	0.9480094801%
VA35	Dinwiddie County, Virginia	0.1960019600%
VA36	Emporia City, Virginia	0.0500005000%
VA37	Essex County, Virginia	0.1010010100%
VA38	Fairfax City, Virginia	0.2690026900%
VA39	Fairfax County, Virginia	8.6720867209%
VA40	Falls Church City, Virginia	0.1020010200%
VA41	Fauquier County, Virginia	1.2100121001%
VA42	Floyd County, Virginia	0.1820018200%
VA43	Fluvanna County, Virginia	0.1940019400%
VA44	Franklin City, Virginia	0.0790007900%
VA45	Franklin County, Virginia	0.9540095401%
VA46	Frederick County, Virginia	1.2770127701%
VA47	Fredericksburg City, Virginia	0.5240052401%
VA48	Galax City, Virginia	0.1390013900%
VA49	Giles County, Virginia	0.4090040900%

State ID	Qualifying Subdivision	Consolidated State Allocation
VA50	Gloucester County, Virginia	0.4240042400%
VA51	Goochland County, Virginia	0.2250022500%
VA52	Grayson County, Virginia	0.2240022400%
VA53	Greene County, Virginia	0.1780017800%
VA54	Greensville County, Virginia	0.1240012400%
VA55	Halifax County, Virginia	0.3530035300%
VA56	Hampton City, Virginia	1.5380153802%
VA57	Hanover County, Virginia	1.0790107901%
VA58	Harrisonburg City, Virginia	0.5230052301%
VA59	Henrico County, Virginia	4.4730447304%
VA60	Henry County, Virginia	1.2200122001%
VA61	Highland County, Virginia	0.0230002300%
VA62	Hopewell City, Virginia	0.3440034400%
VA63	Isle of Wight County, Virginia	0.3560035600%
VA64	James City County, Virginia	0.6120061201%
VA65	King and Queen County, Virginia	0.0720007200%
VA66	King George County, Virginia	0.3060030600%
VA67	King William County, Virginia	0.1780017800%
VA68	Lancaster County, Virginia	0.1350013500%
VA69	Lee County, Virginia	0.5560055601%
VA70	Lexington City, Virginia	0.0930009300%
VA71	Loudoun County, Virginia	2.5670256703%
VA72	Louisa County, Virginia	0.4490044900%
VA73	Lunenburg County, Virginia	0.0880008800%
VA74	Lynchburg City, Virginia	0.8160081601%
VA75	Madison County, Virginia	0.1630016300%
VA76	Manassas City, Virginia	0.4520045200%
VA77	Manassas Park City, Virginia	0.0950009500%
VA78	Martinsville City, Virginia	0.4940049400%
VA79	Mathews County, Virginia	0.0880008800%
VA80	Mecklenburg County, Virginia	0.3440034400%
VA81	Middlesex County, Virginia	0.1080010800%
VA82	Montgomery County, Virginia	1.2050120501%
VA83	Nelson County, Virginia	0.1470014700%
VA84	New Kent County, Virginia	0.1560015600%
VA85	Newport News City, Virginia	2.0470204702%
VA86	Norfolk City, Virginia	3.3880338803%
VA87	Northampton County, Virginia	0.1220012200%
VA88	Northumberland County, Virginia	0.1290012900%
VA89	Norton City, Virginia	0.1100011000%
VA90	Nottoway County, Virginia	0.1330013300%
VA91	Orange County, Virginia	0.6380063801%
VA92	Page County, Virginia	0.4100041000%
VA93	Patrick County, Virginia	0.3290032900%
VA94	Petersburg City, Virginia	0.3950039500%
VA95	Pittsylvania County, Virginia	0.7500075001%
VA96	Poquoson City, Virginia	0.1860018600%
VA97	Portsmouth City, Virginia	1.9370193702%
VA98	Powhatan County, Virginia	0.2620026200%

State ID	Qualifying Subdivision	Consolidated State Allocation
VA99	Prince Edward County, Virginia	0.1900019000%
VA100	Prince George County, Virginia	0.3510035100%
VA101	Prince William County, Virginia	3.5560355604%
VA102	Pulaski County, Virginia	1.0610106101%
VA103	Radford City, Virginia	0.2470024700%
VA104	Rappahannock County, Virginia	0.0910009100%
VA105	Richmond City, Virginia	4.2250422504%
VA106	Richmond County, Virginia	0.0840008400%
VA107	Roanoke City, Virginia	1.8590185902%
VA108	Roanoke County, Virginia	1.4980149801%
VA109	Rockbridge County, Virginia	0.2350023500%
VA110	Rockingham County, Virginia	0.6140061401%
VA111	Russell County, Virginia	1.0640106401%
VA112	Salem City, Virginia	0.7860078601%
VA113	Scott County, Virginia	0.4210042100%
VA114	Shenandoah County, Virginia	0.6600066001%
VA115	Smyth County, Virginia	0.5920059201%
VA116	Southampton County, Virginia	0.1370013700%
VA117	Spotsylvania County, Virginia	1.4170141701%
VA118	Stafford County, Virginia	1.4430144301%
VA119	Staunton City, Virginia	0.4400044000%
VA120	Suffolk City, Virginia	0.7100071001%
VA121	Surry County, Virginia	0.0580005800%
VA122	Sussex County, Virginia	0.0810008100%
VA123	Tazewell County, Virginia	1.6060160602%
VA124	Virginia Beach City, Virginia	4.8590485905%
VA125	Warren County, Virginia	0.7660076601%
VA126	Washington County, Virginia	0.9960099601%
VA127	Waynesboro City, Virginia	0.3630036300%
VA128	Westmoreland County, Virginia	0.2230022300%
VA129	Williamsburg City, Virginia	0.0860008600%
VA130	Winchester City, Virginia	0.6490064901%
VA131	Wise County, Virginia	1.7560175602%
VA132	Wythe County, Virginia	0.6420064201%
VA133	York County, Virginia	0.5610056101%

State ID	Qualifying Subdivision	Consolidated State Allocation
WA1	Aberdeen City, Washington	0.2491525333%
WA2	Adams County, Washington	0.1638732475%
WA3	Anacortes City, Washington	0.1774962906%
WA4	Arlington City, Washington	0.2620524080%
WA5	Asotin County, Washington	0.4694498386%
WA6	Auburn City, Washington	0.3251297029%
WA7	Bainbridge Island City, Washington	0.1364686014%
WA8	Battle Ground City, Washington	0.1384729857%
WA9	Bellevue City, Washington	1.1300592573%
WA10	Bellingham City, Washington	0.8978614577%
WA11	Benton County, Washington	1.4848831892%
WA12	Bonney Lake City, Washington	0.1190773864%
WA13	Bothell City, Washington	0.4476161304%
WA14	Bremerton City, Washington	0.6193374389%
WA15	Burien City, Washington	0.0270962921%
WA16	Burlington City, Washington	0.1146861661%
WA17	Camas City, Washington	0.2691592724%
WA18	Centralia City, Washington	0.1909990353%
WA19	Chelan County, Washington	0.7434914485%
WA20	Cheney City, Washington	0.1238454349%
WA21	Clallam County, Washington	1.3076983401%
WA22	Clark County, Washington	4.5149775326%
WA23	Columbia County, Washington	0.0561699537%
WA24	Covington City, Washington	0.0118134406%
WA25	Cowlitz County, Washington	1.7226945990%
WA26	Des Moines City, Washington	0.1179764526%
WA27	Douglas County, Washington	0.3932175175%
WA28	East Wenatchee City, Washington	0.0799810865%
WA29	Edgewood City, Washington	0.0048016791%
WA30	Edmonds City, Washington	0.3058936009%
WA31	Ellensburg City, Washington	0.0955824915%
WA32	Enumclaw City, Washington	0.0537768326%
WA33	Everett City, Washington	1.9258363241%
WA34	Federal Way City, Washington	0.3061452240%
WA35	Ferndale City, Washington	0.0646101891%
WA36	Ferry County, Washington	0.1153487994%
WA37	Fife City, Washington	0.1955185481%
WA38	Franklin County, Washington	0.3361237144%
WA39	Garfield County, Washington	0.0321982209%
WA40	Gig Harbor City, Washington	0.0859963345%
WA41	Grandview City, Washington	0.0530606109%
WA42	Grant County, Washington	0.9932572167%
WA43	Grays Harbor County, Washington	0.9992429138%
WA44	Island County, Washington	0.6820422610%
WA45	Issaquah City, Washington	0.1876240107%
WA46	Jefferson County, Washington	0.4417137380%
WA47	Kelso City, Washington	0.1331145270%
WA48	Kenmore City, Washington	0.0204441024%

State ID	Qualifying Subdivision	Consolidated State Allocation
WA49	Kennewick City, Washington	0.5415650564%
WA50	Kent City, Washington	0.5377397676%
WA51	King County, Washington	13.9743722662%
WA52	Kirkland City, Washington	0.5453525246%
WA53	Kitsap County, Washington	2.6294133668%
WA54	Kittitas County, Washington	0.3855704683%
WA55	Klickitat County, Washington	0.2211673457%
WA56	Lacey City, Washington	0.2348627221%
WA57	Lake Forest Park City, Washington	0.0525439124%
WA58	Lake Stevens City, Washington	0.1385202891%
WA59	Lakewood City, Washington	0.5253640894%
WA60	Lewis County, Washington	1.0777377479%
WA61	Liberty Lake City, Washington	0.0389636519%
WA62	Lincoln County, Washington	0.1712669645%
WA63	Longview City, Washington	0.6162736905%
WA64	Lynden City, Washington	0.0827115612%
WA65	Lynnwood City, Washington	0.7704629214%
WA66	Maple Valley City, Washington	0.0093761587%
WA67	Marysville City, Washington	0.3945067827%
WA68	Mason County, Washington	0.8089918012%
WA69	Mercer Island City, Washington	0.1751797481%
WA70	Mill Creek City, Washington	0.1227939546%
WA71	Monroe City, Washington	0.1771621898%
WA72	Moses Lake City, Washington	0.2078293909%
WA73	Mount Vernon City, Washington	0.2801063665%
WA74	Mountlake Terrace City, Washington	0.2108935805%
WA75	Mukilteo City, Washington	0.2561790702%
WA76	Newcastle City, Washington	0.0033117880%
WA77	Oak Harbor City, Washington	0.2511550431%
WA78	Okanogan County, Washington	0.6145043345%
WA79	Olympia City, Washington	0.6039423385%
WA80	Pacific County, Washington	0.4895416466%
WA81	Pasco City, Washington	0.4278056066%
WA82	Pend Oreille County, Washington	0.2566374940%
WA83	Pierce County, Washington	7.2310164020%
WA84	Port Angeles City, Washington	0.4598370527%
WA85	Port Orchard City, Washington	0.1009497162%
WA86	Poulsbo City, Washington	0.0773748246%
WA87	Pullman City, Washington	0.2214837491%
WA88	Puyallup City, Washington	0.3845704814%
WA89	Redmond City, Washington	0.4839486007%
WA90	Renton City, Washington	0.7652626920%
WA91	Richland City, Washington	0.4756779517%
WA92	Sammamish City, Washington	0.0224369090%
WA93	San Juan County, Washington	0.2101495171%
WA94	Seatac City, Washington	0.1481551278%
WA95	Seattle City, Washington	6.6032403816%

State ID	Qualifying Subdivision	Consolidated State Allocation
WA96	Sedro-Woolley City, Washington	0.0661146351%
WA97	Shelton City, Washington	0.1239179888%
WA98	Shoreline City, Washington	0.0435834501%
WA99	Skagit County, Washington	1.0526023961%
WA100	Skamania County, Washington	0.1631931925%
WA101	Snohomish City, Washington	0.0861097964%
WA102	Snohomish County, Washington	6.9054415622%
WA103	Snoqualmie City, Washington	0.0649164481%
WA104	Spokane City, Washington	3.0872078287%
WA105	Spokane County, Washington	5.5623859292%
WA106	Spokane Valley City, Washington	0.0684217500%
WA107	Stevens County, Washington	0.7479240179%
WA108	Sumner City, Washington	0.1083157569%
WA109	Sunnyside City, Washington	0.1213478384%
WA110	Tacoma City, Washington	3.2816374617%
WA111	Thurston County, Washington	2.3258492094%
WA112	Tukwila City, Washington	0.3032205739%
WA113	Tumwater City, Washington	0.2065982350%
WA114	University Place City, Washington	0.0353733363%
WA115	Vancouver City, Washington	1.7306605325%
WA116	Wahkiakum County, Washington	0.0596582197%
WA117	Walla Walla City, Washington	0.3140768654%
WA118	Walla Walla County, Washington	0.5543870294%
WA119	Washougal City, Washington	0.1279328220%
WA120	Wenatchee City, Washington	0.2968333494%
WA121	West Richland City, Washington	0.0459360490%
WA122	Whatcom County, Washington	1.3452637306%
WA123	Whitman County, Washington	0.2626805837%
WA124	Woodinville City, Washington	0.0185516364%
WA125	Yakima City, Washington	0.6060410539%
WA126	Yakima County, Washington	1.9388392959%

State ID	Qualifying Subdivision	Consolidated State Allocation
WI1	Adams County, Wisconsin	0.3270000000%
WI4	Ashland County, Wisconsin	0.2250000000%
WI7	Barron County, Wisconsin	0.4780000000%
WI8	Bayfield County, Wisconsin	0.1240000000%
WI13	Brown County, Wisconsin	2.9000000000%
WI15	Buffalo County, Wisconsin	0.1260000000%
WI17	Burnett County, Wisconsin	0.2240000000%
WI19	Calumet County, Wisconsin	0.3860000000%
WI21	Chippewa County, Wisconsin	0.6960000000%
WI23	Clark County, Wisconsin	0.2610000000%
WI24	Columbia County, Wisconsin	1.0760000000%
WI25	Crawford County, Wisconsin	0.1950000000%
WI26	Cudahy City, Wisconsin	0.0870000000%
WI27	Dane County, Wisconsin	8.2480000000%
WI30	Dodge County, Wisconsin	1.3020000000%
WI31	Door County, Wisconsin	0.2820000000%
WI32	Douglas County, Wisconsin	0.5540000000%
WI33	Dunn County, Wisconsin	0.4420000000%
WI35	Eau Claire County, Wisconsin	1.1770000000%
WI38	Florence County, Wisconsin	0.0530000000%
WI40	Fond Du Lac County, Wisconsin	1.1960000000%
WI41	Forest County, Wisconsin	0.1270000000%
WI43	Franklin City, Wisconsin	0.1550000000%
WI48	Grant County, Wisconsin	0.4980000000%
WI50	Green County, Wisconsin	0.4660000000%
WI51	Green Lake County, Wisconsin	0.2800000000%
WI53	Greenfield City, Wisconsin	0.1630000000%
WI61	Iowa County, Wisconsin	0.2790000000%
WI62	Iron County, Wisconsin	0.0610000000%
WI63	Jackson County, Wisconsin	0.2360000000%
WI65	Jefferson County, Wisconsin	1.0510000000%
WI66	Juneau County, Wisconsin	0.4380000000%
WI68	Kenosha City, Wisconsin	0.4840000000%
WI69	Kenosha County, Wisconsin	3.7120000000%
WI70	Kewaunee County, Wisconsin	0.1560000000%
WI72	La Crosse County, Wisconsin	1.6490000000%
WI73	Lafayette County, Wisconsin	0.1340000000%
WI74	Langlade County, Wisconsin	0.3120000000%
WI75	Lincoln County, Wisconsin	0.3500000000%
WI80	Manitowoc County, Wisconsin	1.4030000000%
WI81	Marathon County, Wisconsin	1.2590000000%
WI82	Marinette City, Wisconsin	0.0320000000%
WI83	Marinette County, Wisconsin	0.5030000000%
WI84	Marquette County, Wisconsin	0.2460000000%
WI87	Menominee County, Wisconsin	0.0800000000%
WI92	Milwaukee City, Wisconsin	7.8150000000%
WI93	Milwaukee County, Wisconsin	25.2210000000%
WI95	Monroe County, Wisconsin	0.6550000000%

State ID	Qualifying Subdivision	Consolidated State Allocation
WI96	Mount Pleasant Village, Wisconsin	0.1170000000%
WI100	Oak Creek City, Wisconsin	0.1660000000%
WI102	Oconto County, Wisconsin	0.3360000000%
WI104	Oneida County, Wisconsin	0.5260000000%
WI107	Outagamie County, Wisconsin	1.8360000000%
WI108	Ozaukee County, Wisconsin	1.0360000000%
WI109	Pepin County, Wisconsin	0.0550000000%
WI111	Pierce County, Wisconsin	0.3870000000%
WI113	Pleasant Prairie Village, Wisconsin	0.0590000000%
WI118	Portage County, Wisconsin	0.7290000000%
WI119	Price County, Wisconsin	0.1490000000%
WI121	Racine County, Wisconsin	3.2080000000%
WI123	Richland County, Wisconsin	0.2180000000%
WI125	Rock County, Wisconsin	2.9470000000%
WI126	Rusk County, Wisconsin	0.1590000000%
WI128	Sauk County, Wisconsin	1.2260000000%
WI129	Sawyer County, Wisconsin	0.2580000000%
WI130	Shawano County, Wisconsin	0.4180000000%
WI132	Sheboygan County, Wisconsin	1.4100000000%
WI134	South Milwaukee City, Wisconsin	0.0960000000%
WI135	St Croix County, Wisconsin	0.8290000000%
WI138	Sturtevant Village, Wisconsin	0.0180000000%
WI141	Superior City, Wisconsin	0.0890000000%
WI143	Taylor County, Wisconsin	0.1590000000%
WI145	Trempealeau County, Wisconsin	0.3200000000%
WI147	Union Grove Village, Wisconsin	0.0070000000%
WI148	Vernon County, Wisconsin	0.3220000000%
WI150	Vilas County, Wisconsin	0.4680000000%
WI151	Walworth County, Wisconsin	1.5730000000%
WI152	Washburn County, Wisconsin	0.1850000000%
WI153	Washington County, Wisconsin	1.9910000000%
WI156	Waukesha County, Wisconsin	6.0350000000%
WI158	Waupaca County, Wisconsin	0.6060000000%
WI161	Waushara County, Wisconsin	0.2310000000%
WI162	Wauwatosa City, Wisconsin	0.3090000000%
WI163	West Allis City, Wisconsin	0.3780000000%
WI168	Winnebago County, Wisconsin	2.1760000000%
WI170	Wood County, Wisconsin	0.8420000000%
WI171	Yorkville Town, Wisconsin	0.0020000000%

State ID	Qualifying Subdivision	Consolidated State Allocation
WY1	Albany County, Wyoming	1.6329876137%
WY2	Big Horn County, Wyoming	3.0324432485%
WY3	Campbell County, Wyoming	4.4393335213%
WY4	Carbon County, Wyoming	3.6968556043%
WY5	Casper City, Wyoming	7.3503611059%
WY6	Cheyenne City, Wyoming	1.2286265328%
WY7	Converse County, Wyoming	1.8962432493%
WY8	Crook County, Wyoming	0.5448669885%
WY9	Evanston City, Wyoming	1.9702405199%
WY10	Fremont County, Wyoming	6.7374838437%
WY11	Gillette City, Wyoming	1.7410635670%
WY12	Goshen County, Wyoming	1.6361202905%
WY13	Green River City, Wyoming	0.6122218672%
WY14	Hot Springs County, Wyoming	0.8557309329%
WY15	Jackson Town, Wyoming	0.5598544963%
WY16	Johnson County, Wyoming	0.9322427236%
WY17	Laramie City, Wyoming	3.4181078811%
WY18	Laramie County, Wyoming	15.5855269922%
WY19	Lincoln County, Wyoming	3.1228011914%
WY20	Natrona County, Wyoming	7.9000169472%
WY21	Niobrara County, Wyoming	0.1540280861%
WY22	Park County, Wyoming	5.7964268009%
WY23	Platte County, Wyoming	1.7507027157%
WY24	Riverton City, Wyoming	1.2744483314%
WY25	Rock Springs City, Wyoming	1.5261479738%
WY26	Sheridan City, Wyoming	0.3405187102%
WY27	Sheridan County, Wyoming	3.9149494912%
WY28	Sublette County, Wyoming	0.7136740477%
WY29	Sweetwater County, Wyoming	7.6391306020%
WY30	Teton County, Wyoming	1.3290900349%
WY31	Uinta County, Wyoming	4.3911508108%
WY32	Washakie County, Wyoming	1.5007597928%
WY33	Weston County, Wyoming	0.7758434851%

EXHIBIT H
[Intentionally Omitted]

EXHIBIT I
Subdivisions with a Population Greater than 10,000[1]

(*See* Distributors' Exhibit I)

[1] Entities denoted with an asterisk (*) are Primary Subdivisions with a population greater than 30,000. All other entities listed have populations greater than 10,000 but less than 30,000.

EXHIBIT J-1
AbbVie Entities

List Of Subsidiaries

The following is a list of subsidiaries of AbbVie Inc. as of December 31, 2021. AbbVie is not a subsidiary of any other corporation.

Domestic Subsidiaries	Incorporation
AbbVie Aviation LLC	Illinois
AbbVie Biopharmaceuticals LLC	Delaware
AbbVie Bioresearch Center Inc.	Delaware
AbbVie Biotech Ventures Inc.	Delaware
AbbVie Biotherapeutics Inc.	Delaware
AbbVie Domestic Holdings Inc.	Delaware
AbbVie Endocrine Inc.	Delaware
AbbVie Endocrinology Inc. (d/b/a Pharmacy Solutions)	Delaware
AbbVie Finance Corporation	Delaware
AbbVie Finance LLC	Delaware
AbbVie Global Inc.	Delaware
AbbVie Global Holdings Inc.	Delaware
AbbVie Holdco Inc.	Delaware
AbbVie Holdings Inc.	Delaware
AbbVie International Inc.	Delaware
AbbVie Investments Inc.	Delaware
AbbVie Pharma Inc.	Delaware
AbbVie Pharmaceuticals LLC	Delaware
AbbVie Products LLC	Georgia

AbbVie Purchasing LLC	Delaware
AbbVie Resources Inc.	Delaware
AbbVie Resources International Inc.	Delaware
AbbVie Respiratory LLC	Delaware
AbbVie Sales Inc.	Delaware
AbbVie Services Inc.	Delaware
AbbVie Stemcentrx LLC	Delaware
AbbVie Subsidiary LLC	Delaware
AbbVie US Holdings LLC	Delaware
AbbVie US LLC	Delaware
AbbVie Ventures LLC	Delaware
Aeropharm Technology, LLC	Delaware
AGN International Inc.	Delaware
AGN Kythera, LP	Delaware
AGN Labs LLC	Delaware
AGN LLC	Delaware
AGN Sundry, LLC	Delaware
Allergan Akarna LLC	Delaware
Allergan Finance, LLC	Nevada
ALLERGAN FINCO 2 INC.	Delaware
ALLERGAN FINCO INC.	Delaware
Allergan GI Corp	Delaware

Allergan GP Holding LLC	Delaware
Allergan Holdco US, Inc.	Delaware
Allergan Holdings B1, Inc.	Delaware
Allergan Holdings, Inc.	Delaware
Allergan, Inc.	Delaware
Allergan Laboratories, LLC	Delaware
Allergan Lending 2 LLC	Delaware
Allergan Lending LLC	Delaware
Allergan Pharma Inc.	Delaware
Allergan Property Holdings, LLC	Delaware
Allergan Puerto Rico Holdings, Inc.	Delaware
Allergan Sales Puerto Rico, Inc.	California
Allergan Sales, LLC (d/b/a Allergan; d/b/a Bioscience Laboratories)	Delaware
Allergan Therapeutics LLC	Delaware
Allergan USA, Inc. (d/b/a Pacificom / Pacific Communications)	Delaware
Allergan W.C. Holding Inc.	Delaware
Anterios, Inc.	Delaware
Aptalis Pharma US, Inc.	Delaware
AqueSys, Inc.	Delaware
BioDisplay Technologies, Inc.	Illinois
Bonti, Inc.	Delaware

Cearna Aesthetics, Inc.	Delaware
Chase Pharmaceuticals Corporation	Delaware
Del Mar Indemnity Company LLC	Hawaii
Durata Holdings, Inc.	Delaware
Durata Therapeutics, Inc.	Delaware
Durata Therapeutics U.S. Limited	Delaware
Eden Biodesign, LLC	Delaware
Envy Medical, Inc.	Delaware
Exemplar Pharma, LLC	Delaware
Foresight Vision5, Inc.	Delaware
Fremont Holding L.L.C.	Delaware
Furiex Pharmaceuticals LLC	Delaware
IEP Pharmaceutical Devices, LLC	Delaware
Keller Medical, Inc.	Delaware
Knoll Pharmaceutical Company	New Jersey
KOS Pharmaceuticals, Inc.	Delaware
Life Properties Inc.	Delaware
LifeCell Corporation	Delaware
MAP Pharmaceuticals, LLC	Delaware
Mavupharma, Inc.	Delaware
MPEX Pharmaceuticals, Inc.	Delaware

Naurex Inc.	Delaware
Oculeve, Inc.	Delaware
Organics L.L.C.	Delaware
Pacific Pharma, Inc.	Delaware
Pharmacyclics LLC	Delaware
Pharmax Holding Limited	Delaware
Repros Therapeutics Inc.	Delaware
Rowell Laboratories, Inc.	Minnesota
RP Merger Sub, Inc.	Delaware
Sapphire Merger Sub, Inc.	Delaware
Silicone Engineering, Inc.	California
Soliton Inc.	Delaware
Suffolk Merger Sub, Inc.	Delaware
TeneoOne, Inc.	Delaware
Tobira Therapeutics, Inc.	Delaware
Topokine Therapeutics, Inc.	Delaware
Transderm, Inc.	Delaware
Unimed Pharmaceuticals, LLC	Delaware
Venice Subsidiary LLC	Delaware
Vicuron Pharmaceuticals LLC	Delaware
Vitae Pharmaceuticals, LLC	Delaware
Warner Chilcott Leasing Equipment Inc.	Delaware

Warner Chilcott Sales (US), LLC	Delaware
Zeltiq A LLC	Delaware
Zeltiq Aesthetics, Inc.	Delaware
Zeltiq International, LLC	Delaware

Foreign Subsidiaries	Incorporation
AbbVie S.A.	Argentina
Allergan Productos Farmaceuticos S.A.	Argentina
Allergan Australia Pty Limited	Australia
Elastagen Pty Ltd	Australia
Kythera Biopharmaceuticals Australia Pty Ltd	Australia
AbbVie Pty Ltd	Australia
AbbVie GmbH	Austria
AbbVie Bahamas Ltd.	Bahamas
AbbVie SA	Belgium
Allergan N.V.	Belgium
Odyssea Pharma SPRL	Belgium
AbbVie Ltd	Bermuda
AbbVie Biotechnology Ltd	Bermuda
AbbVie Finance Limited	Bermuda
AbbVie Global Enterprises Ltd.	Bermuda
AbbVie Holdings Unlimited	Bermuda
Allergan Development Ventures I, LP	Bermuda
Allergan Holdings B Ltd.	Bermuda
Allergan Holdings B2, Ltd.	Bermuda
Kythera Holdings Ltd	Bermuda
Warner Chilcott Holdings Company II, Limited	Bermuda

Warner Chilcott Holdings Company III, Limited	Bermuda
Warner Chilcott Limited	Bermuda
AbbVie d.o.o.	Bosnia
AbbVie Farmacêutica Ltda.	Brazil
Allergan Productos Farmaceuticos Ltda.	Brazil
AbbVie EOOD	Bulgaria
Allergan Bulgaria EOOD	Bulgaria
AbbVie Corporation	Canada
AbbVie Holdings Corporation	Canada
Allergan Inc.	Canada
Aptalis Pharma Canada ULC	Canada (Alberta)
Allergan Holdings C, Ltd.	Cayman Islands
Allergan Overseas Holding	Cayman Islands
Pharmacyclics Cayman Ltd.	Cayman Islands
Stemcentrx Cayman Ltd.	Cayman Islands
AbbVie Productos Farmacéuticos Limitada	Chile
Allergan Laboratorios Limitada	Chile
AbbVie Pharmaceutical Trading (Shanghai) Co., Ltd.	China
Allergan (Chengdu) Medical Aesthetics Clinic Co., Ltd.	China
Allergan Information Consulting (Shanghai) Co., Ltd.	China
Allergan Medical Device (Shanghai) Co., Ltd.	China

AbbVie S.A.S.	Colombia
Allergan de Colombia S.A.	Colombia
Allergan Costa Rica S.R.L.	Costa Rica
AbbVie d.o.o.	Croatia
AbbVie Limited	Cyprus
AbbVie s.r.o.	Czech Republic
Allergan CZ, s.r.o.	Czech Republic
AbbVie A/S	Denmark
Allergan ApS	Denmark
AbbVie, S.R.L.	Dominican Republic
AbbVie L.L.C.	Egypt
AbbVie OÜ	Estonia
AbbVie Oy	Finland
Allergan Finland Oy	Finland
AbbVie SAS	France
Allergan France SAS	France
Allergan Holdings France SAS	France
Allergan Industrie SAS	France
Eurand France S.A.S.	France
Forest Holdings France S.A.S.	France
AbbVie Biotechnology GmbH	Germany
AbbVie Deutschland GmbH & Co. KG	Germany

AbbVie Komplementär GmbH	Germany
AbbVie Pharmaceuticals GmbH	Germany
AbbVie Real Estate Management GmbH	Germany
Allergan GmbH	Germany
AbbVie (Gibraltar) Holdings Limited	Gibraltar
AbbVie (Gibraltar) Limited	Gibraltar
AbbVie Pharmaceuticals Societe Anonyme	Greece
Allergan Hellas Pharmaceuticals S.A.	Greece
AbbVie, Socieded Anonima	Guatemala
AbbVie Limited	Hong Kong
Allergan Hong Kong Limited	Hong Kong
AbbVie Gyogyszerkereskedelmi Korlatolt Felelossegu Tarsasag	Hungary
Allergan Hungary Kft.	Hungary
Allergan Healthcare India Private Limited	India
Allergan India Private Limited*	India
AbbVie International Holdings Unlimited Company	Ireland
AbbVie Ireland Holdings Unlimited Company	Ireland
AbbVie Ireland Unlimited Company	Ireland
AbbVie Limited	Ireland
AbbVie Manufacturing Management Unlimited Company	Ireland

Allergan Botox Unlimited Company (In voluntary liquidation)	Ireland
Allergan Equities Unlimited Company	Ireland
Allergan Furiex Ireland Limited (In voluntary liquidation)	Ireland
Allergan Holdings Unlimited Company	Ireland
Allergan Ireland Holdings Unlimited Company	Ireland
Allergan Ireland Limited	Ireland
Allergan Limited	Ireland
Allergan Pharma Limited	Ireland
Allergan Pharmaceuticals Holdings (Ireland) Unlimited Company (In voluntary liquidation)	Ireland
Allergan Pharmaceuticals International Limited	Ireland
Allergan Pharmaceuticals Ireland Unlimited Company	Ireland
Allergan Services International, Unlimited Company	Ireland
Allergan WC Ireland Holdings Limited	Ireland
Forest Laboratories Ireland Limited	Ireland
Fournier Laboratories Ireland Limited	Ireland
Pharmacyclics (Europe) Limited	Ireland
Tosara Exports Limited (In voluntary liquidation)	Ireland
Warner Chilcott Intermediate (Ireland) ULC	Ireland
Zeltiq Ireland International Holdings Unlimited Company	Ireland
Zeltiq Ireland Unlimited Company	Ireland
AbbVie Biopharmaceuticals Ltd.	Israel

Allergan Israel Ltd.	Israel
Marbelle Threads Ltd.	Israel
AbbVie S.r.l.	Italy
Allergan S.p.A.	Italy
Aptalis Pharma S.r.l.	Italy
AbbVie GK	Japan
Allergan International YK	Japan
Allergan Japan KK	Japan
Allergan K.K.	Japan
Allergan NK	Japan
AbbVie Ltd	Korea, South
Allergan Korea Ltd.	Korea, South
AbbVie SIA	Latvia
AbbVie UAB	Lithuania
Allergan Baltics, UAB	Lithuania
AbbVie Biotherapeutics S.àr.l.	Luxembourg
AbbVie Holdings S.à r.l.	Luxembourg
AbbVie Global S.à r.l.	Luxembourg
Allergan AHI S.à r.l.	Luxembourg
Allergan Capital 2 S.à r.l.	Luxembourg
Allergan Capital S.à r.l.	Luxembourg
Allergan Europe S.à r.l.	Luxembourg

Allergan Finance S.à r.l.	Luxembourg
Allergan Funding SCS	Luxembourg
Allergan Global S.à r.l.	Luxembourg
Allergan Holdings S.à r.l.	Luxembourg
Allergan International Holding S.à r.l.	Luxembourg
Allergan Luxembourg International S.à r.l.	Luxembourg
Allergan WC 1 S.à r.l.	Luxembourg
Allergan WC 2 S.à r.l.	Luxembourg
AbbVie Sdn. Bhd.	Malaysia
Allergan Malaysia Sdn Bhd	Malaysia
Allergan Malta Holding Limited	Malta
Allergan Malta II Limited	Malta
Allergan Malta Limited	Malta
AbbVie Farmacéuticos, S.A. de C.V.	Mexico
Allergan Servicios Profesionales, S. de R.L. de C.V.	Mexico
Allergan, S.A. de C.V.	Mexico
AbbVie B.V.	Netherlands
AbbVie Central Finance B.V.	Netherlands
AbbVie Enterprises B.V.	Netherlands
AbbVie Finance B.V.	Netherlands
AbbVie Ireland NL B.V.	Netherlands

AbbVie Japan Holdings B.V.	Netherlands
AbbVie Logistics B.V.	Netherlands
AbbVie Nederland Holdings B.V.	Netherlands
AbbVie Pharmaceuticals B.V.	Netherlands
AbbVie Research B.V.	Netherlands
AbbVie Venezuela B.V.	Netherlands
AbbVie Venezuela Holdings B.V.	Netherlands
Allergan B.V.	Netherlands
Aptalis Holding B.V.	Netherlands
Aptalis Netherlands B.V.	Netherlands
Forest Finance B.V.	Netherlands
Warner Chilcott Nederland B.V.	Netherlands
AbbVie Limited	New Zealand
Allergan New Zealand Limited	New Zealand
AbbVie AS	Norway
Allergan AS	Norway
AbbVie, S. de R.L.	Panama
Allergan Healthcare Philippines, Inc.	Philippines
AbbVie Polska Sp. z o.o.	Poland
AbbVie Sp. z o.o.	Poland
Allergan Sp. z o.o.	Poland
AbbVie, L.da	Portugal

AbbVie Promoção, L.da	Portugal
AbbVie Corp	Puerto Rico
Knoll LLC	Puerto Rico
AbbVie S.R.L.	Romania
AbbVie Trading S.R.L.	Romania
Allergan S.R.L.	Romania
AbbVie Limited Liability Company	Russia
Allergan C.I.S. S.a.r.l.	Russia
Allergan Saudi Arabia LLC*	Saudi Arabia
Allergan d.o.o. Beograd	Serbia
AbbVie Operations Singapore Pte. Ltd.	Singapore
AbbVie Pte. Ltd.	Singapore
Allergan Singapore Pte. Ltd.	Singapore
AbbVie Holdings s.r.o.	Slovakia
AbbVie s.r.o.	Slovakia
Allergan SK s.r.o.	Slovakia
AbbVie Biofarmacevtska druzba d.o.o.	Slovenia
AbbVie (Pty) Ltd.	South Africa
Allergan Pharmaceuticals (Proprietary) Limited	South Africa
AbbVie Spain, S.L.	Spain
Allergan S.A.	Spain

AbbVie AB	Sweden
Allergan Norden AB	Sweden
AbbVie AG	Switzerland
AbbVie Biopharmaceuticals GmbH	Switzerland
Allergan AG	Switzerland
Pharmacyclics Switzerland GmbH	Switzerland
VarioRaw Percutive S.à r.l.	Switzerland
Warner Chilcott Pharmaceuticals S à rl	Switzerland
Allergan Pharmaceuticals Taiwan Co. Ltd.	Taiwan
AbbVie Ltd.	Thailand
Allergan (Thailand) Limited	Thailand
AbbVie Sarl	Tunisia
AbbVie Tıbbi İlaçlar Sanayi ve Ticaret Limited Şirketi	Turkey
Allergan Ilaclari Ticaret Anonim Sirketi	Turkey
Allergan Ukraine LLC	Ukraine
Allergan Middle East Limited	United Arab Emirates
AbbVie Australasia Holdings Limited	United Kingdom
AbbVie Biotherapeutics Limited	United Kingdom
AbbVie Investments Limited	United Kingdom
AbbVie Ltd	United Kingdom
AbbVie Trustee Company Limited	United Kingdom
AbbVie UK Holdco Limited	United Kingdom

Akarna Therapeutics, Limited	United Kingdom
Allergan Holdco UK Limited	United Kingdom
Allergan Holdings Limited	United Kingdom
Allergan Limited	United Kingdom
Lifecell EMEA Limited (In voluntary liquidation)	United Kingdom
Renable Pharma Ltd.	United Kingdom
Zeltiq Limited (In voluntary liquidation)	United Kingdom
AbbVie S.A.	Uruguay
AbbVie Pharmaceuticals SCA.	Venezuela

* Ownership of such subsidiary is less than 100% by AbbVie or an AbbVie subsidiary

EXHIBIT J-2
Allergan Entities

EX-21.1 10 agn-ex211_448.htm EX-21.1

Exhibit 21.1

Name	Jurisdiction of Incorporation
AGN International Inc.	US - Delaware
AGN Kythera, L.P.	US- Delaware
AGN Labs LLC	US - Delaware
AGN LLC	US - Delaware
AGN Sundry LLC	US - Delaware
Akarna Therapeutics, Limited	UK
Allergan WC 1 S.a r.l.	Luxembourg
Allergan (Chengdu) Medical Aesthetics Clinic Co., Ltd.	China
Allergan (Thailand) Limited	Thailand
Allergan AG	Switzerland
Allergan AHI S.à r.l. Management (DIFC Branch)	UAB
Allergan AHI S.á r.l.	Luxembourg
Allergan AHI S.á r.l., Luxembourg, Zweigniederlassung Zug Branch	Switzerland
Allergan Akarna LLC	US - Delaware
Allergan ApS	Denmark
Allergan AS	Norway
Allergan Australia Pty Limited	Australia
Allergan B.V.	Netherlands, The
Allergan Baltics, UAB	Lithuania
Allergan Baltics, UAB Eesti filiaal	Estonia Branch
Allergan Baltics, UAB Latvijas filias	Latvia
Allergan Biologics Ltd.	UK
Allergan Botox Unlimited Company	Ireland
Allergan Bulgaria EOOD	Bulgaria
Allergan C.I.S. SARL	Russian Federation
Allergan Capital S.à r.l.	Luxembourg
Allergan Capital 2 S.à r.l.	Luxembourg
Allergan Capital 2 Sarl, Luxembourg, Zweigniederlassung, Zug	Switzerland
Allergan Capital S.à r.l., Luxembourg, Zweigniederlassung Zug Branch	Switzerland
Allergan Cayman Islands Irish Branch	Ireland
Allergan Costa Rica S.R.L	Costa Rica
Allergan CZ, s.r.o.	Czech Republic
Allergan d.o.o. Beograd	Serbia
Allergan de Colombia S.A.	Colombia
Allergan de Venezuela, C.A.	Venzuela
Allergan Development Ventures I Ireland Unlimited Company	Ireland
Allergan Development Ventures I LP	Bermuda
Allergan Development Ventures I UK	UK
Allergan Equities Unlimited Company	Ireland
Allergan Europe S.à r.l.	Luxembourg
Allergan Finance S.à r.l.	Luxembourg
Allergan Finance, LLC	US - Nevada
Allergan Finco 2 Inc.	US - Delaware
Allergan Finco Inc.	US - Delaware

Exhibit 21.1

Allergan Finland Oy	Finland
Allergan France SAS	France
Allergan Funding SCS	Luxembourg
Allergan Furiex Ireland Limited	Ireland
Allergan GI Corp.	US - Delaware
Allergan Global S.à r.l.	Luxembourg
Allergan GmbH	Germany
Allergan GP Holding LLC	US- Delaware
Allergan Healthcare India Private Limited	India
Allergan Healthcare Philippines, Inc.	Philippines
Allergan Hellas Pharmaceuticals S.A.	Greece
Allergan Holdco UK Limited	UK
Allergan Holdco US, Inc.	US - Delaware
Allergan Holdings B Ltd.	Bermuda
Allergan Holdings B1, Inc.	US - Delaware
Allergan Holdings B2 Limited	Bermuda
Allergan Holdings C Ltd	Cayman Island
Allergan Holdings France SAS	France
Allergan Holdings Limited	UK
Allergan Holdings S. à r.l.	Luxembourg
Allergan Holdings Unlimited Company	Ireland
Allergan Holdings, Inc.	US - Delaware
Allergan Hong Kong Limited	Hong Kong
Allergan Hungary Kft.	Hungary
Allergan Ilaclari Ticaret A.S.	Turkey
Allergan Inc.	Canada
Allergan India Private Limited	India
Allergan Industrie SAS	France
Allergan Information Consulting (Shanghai) Co., Ltd.	China
Allergan International Holding S.à r.l.	Luxembourg
Allergan International YK	Japan
Allergan Ireland Finance Limited	Ireland
Allergan Ireland Holdings Unlimited Company	Ireland
Allergan Ireland Limited	Ireland
Allergan Israel Limited	Israel
Allergan Japan KK	Japan
Allergan KK	Japan
Allergan Korea Ltd	Korea
Allergan Laboratories, LLC	US - Delaware
Allergan Laboratorios Limitada	Chile
Allergan Lending 2 LLC	US - Delaware
Allergan Lending LLC	US - Delaware
Allergan Limited	UK
Allergan Luxembourg International S.à r.l.	Luxembourg
Allergan Malaysia Sdn. Bhd.	Malaysia

Exhibit 21.1

Allergan Malta Holding Limited	Malta
Allergan Malta II Limited	Malta
Allergan Malta Limited	Malta
Allergan Medical Device (Shanghai) Co., Ltd.	China
Allergan Middle East Limited	United Arab Emirates
Allergan N.V.	Belgium
Allergan New Zealand Ltd.	New Zealand
Allergan NK	Japan
Allergan Norden AB	Sweden
Allergan Norden AB Finnish branch	Finland
Allergan Overseas Holding	Cayman Island
Allergan Pharma Inc.	US - Delaware
Allergan Pharma Limited	Ireland
Allergan Pharmaceuticals (Proprietary) Ltd.	South Africa
Allergan Pharmaceuticals Holdings (Ireland) Unlimited Company	Ireland
Allergan Pharmaceuticals International Limited	Ireland
Allergan Pharmaceuticals International Limited Jordan Office	Jordan
Allergan Pharmaceuticals International Limited Lebanon Office	Lebanon
Allergan Pharmaceuticals Ireland	Ireland
Allergan Pharmaceuticals Taiwan Co. Ltd.	Taiwan
Allergan Productos Farmaceuticos S.A.	Argentina
Allergan Produtos Farmaceuticos Ltda.	Brazil
Allergan Property Holdings, LLC	US - Delaware
Allergan Puerto Rico Holdings, Inc.	US - Delaware
Allergan S.A.	Spain
Allergan S.p.A.	Italy
Allergan Sales Puerto Rico, Inc.	US - California
Allergan Sales, LLC (d/b/a Allergan; d/b/a Bioscience Laboratories)	US - Delaware
Allergan Saudi Arabia LLC	Saudi Arablia
Allergan Scientific Office	Egypt
Allergan Services International Unlimited Company	Ireland
Allergan Servicios Profesionales, S. de R.L. de C.V.	Mexico
Allergan Singapore Pte. Ltd.	Singapore
Allergan Singapore Pte. Ltd. Indonesia Rep Office	Indonesia
Allergan Singapore Pte. Ltd. Vietnam Rep Office	Vietnam
Allergan SK s.r.o.	Slovak Republic
Allergan Sp. z.o.o.	Poland
Allergan S.R.L.	Romania
Allergan Therapeutics LLC	US- Delaware
Allergan UK LLP	UK
Allergan Ukraine, LLC	Ukraine
Allergan USA, Inc. (d/b/a Pacificom / Pacific Communications)	US - Delaware
Allergan W.C. Holding Inc.	US - Delaware
Allergan WC 2 S.a r.l.	Luxembourg
Allergan WC Ireland Holdings Ltd.	Ireland

Exhibit 21.1

Allergan, Inc.	US - Delaware
Allergan, S.A. de C.V.	Mexico
Anterios, Inc.	US - Delaware
Aptalis Holding B.V.	Netherlands, The
Aptalis Netherlands B.V.	Netherlands, The
Aptalis Pharma Canada ULC	Canada
Aptalis Pharma S.r.l.	Italy
Aptalis Pharma UK Limited	UK
Aptalis Pharma US, Inc.	US - Delaware
AqueSys, Inc.	US - Delaware
Bonti, Inc.	US - Delaware
Cearna Aesthetics, Inc	US - Delaware
Chase Pharmaceuticals Corporation	US - Delaware
Collagen Luxembourg SA	Luxembourg
Del Mar Indemnity Company, LLC	US - Hawaii
Durata Holdings, Inc.	US - Delaware
Durata Therapeuctics U.S. Limited	US - Delaware
Durata Therapeutics, Inc.	US - Delaware
Eden Biodesign, LLC	US - Delaware
Elastagen Pty Limited	Australia
Envy Medical, Inc.	US - Delaware
Eurand France S.A.S.	France
Exemplar Pharma LLC	US - Delaware
Forest Finance B.V.	Netherlands, The
Forest Holdings France S. A.S.	France
Forest Laboratories Holdings Limited	Ireland
Forest Laboratories Ireland Ltd	Ireland
ForSight VISION5, Inc.	US - Delaware
Furiex Pharmaceuticals, LLC	US - Delaware
Keller Medical, Inc.	US - Delaware
Kythera Biopharmaceuticals Australia Pty Ltd.	Australia
Kythera Holdings Ltd.	Bermuda
LifeCell Corporation	US - Delaware
LifeCell EMEA Limited	UK
LifeCell EMEA Limited Austria branch	Austria
LifeCell EMEA Limited Italy branch	Italy
LifeCell EMEA Limited Sucursal en Espaňa	Spain
LifeCell EMEA Limited, Zweigniederlassung Zürich	Switzerland
LifeCell Medical Resources Limited in voluntary liquidation	Ireland
MAP Pharmaceuticals LLC	US - Delaware
McGhan Ireland Holdings Ltd.	Ireland
McGahn Limited	Ireland
MPEX Pharmaceuticals, Inc.	US - Delaware
Naurex Inc.	US - Delaware
Northwood Medical Innovation, Ltd.	UK

Exhibit 21.1

Oculeve, Inc.	US - Delaware
Odyssea Pharma SPRL	Belgium
Pacific Pharma, Inc.	US - Delaware
Pharm-Allergan GmbH Austria branch	Austria
Pharmax Holding Limited	US - Delaware
Renable Pharma Limited	UK
Repros Therapeutics Inc,.	US- Delaware
RP Merger Sub, Inc.	US - Delaware
Seabreeze Silicone Unlimited Company	Ireland
Silicone Engineering Inc.	US - California
Tobira Therapeutics, Inc.	US - Delaware
Topokine Therapeutics, Inc.	US - Delaware
Tosara Exports Limited	Ireland
Transderm, Inc.	US - Utah
Varioraw Percutive Sàrl	Switzerland
Vicuron Pharmaceuticals LLC	US - Delaware
Viokace LLC	US - Delaware
Vitae Pharmaceuticals LLC	US - Delaware
Warner Chilcott Holdings Company II, Limited	Bermuda
Warner Chilcott Holdings Company III, Limited	Bermuda
Warner Chilcott Intermediate (Ireland) Limited	Ireland
Warner Chilcott Leasing Equipment Inc.	US - Delaware
Warner Chilcott Limited	Bermuda
Warner Chilcott Nederland B.V.	Netherlands, The
Warner Chilcott Pharmaceuticals S. àr.l.	Switzerland
Warner Chilcott Sales (US), LLC	US - Delaware
ZELTIQ A, LLC	US - Delaware
ZELTIQ Aesthetics, Inc.	US - Delaware
ZELTIQ International, LLC	US - Delaware
ZELTIQ International, LLC - Singapore Branch	Singapore
ZELTIQ Ireland International Holdings UC	Ireland
ZELTIQ Ireland Unlimited Company	Ireland
ZELTIQ Limited	United Kingdom
Zeltiq Limited Spanish branch	Spain
Zenpep LLC	US - Delaware

EXHIBIT J-3
Divested Entities

Schedule 4.6(c) - Transferred Group

Ownership interest of Seller Parent and its Subsidiaries is 100% unless otherwise indicated.

	Company Name	***Jurisdiction of Incorporation***
1.	Warner Chilcott Company, LLC	Puerto Rico
2.	Warner Chilcott (Ireland) Limited	Ireland
3.	Warner Chilcott Finance LLC.	Delaware
4.	Warner Chilcott Australia Pty. Ltd.	Australia
5.	Warner Chilcott Pharmaceuticals B.V.B.A.	Belgium
6.	Warner Chilcott France SAS	France
7.	Warner Chilcott Italy S.r.l.	Italy
8.	Actavis Pharma Iberia S.L. (f/k/a Warner Chilcott Iberia S.L.)	Spain
9.	Robin Hood Holdings Ltd.	Malta
10.	Paomar plc	Cyprus
11.	Actavis Pharma Pty Ltd.	Australia
12.	Makoff R&D Laboratories, Inc.	California
13.	R&D Pharmaceutical, Inc.	California
14.	R&D Ferriecit Capital Resources, Inc.	California
15.	R&D Research & Development Corp.	California
16.	R&D New Media Services, Inc.	California
17.	Royce Laboratories, Inc.	Florida
18.	Royce Research Group, Inc.	Florida
19.	Royce Research & Development Limited Partnership I	Florida
20.	The Rugby Group, Inc.	New York

	Company Name	*Jurisdiction of Incorporation*
21.	Watson Laboratories, Inc. Ohio	New York
22.	Rugby Laboratories, Inc.	New York
23.	Changzhou Siyao Pharmaceuticals Co., Ltd. (25%)	China
24.	Watson Pharmaceuticals (Asia) Ltd.	BVI
25.	WP Holdings, Ltd.	BVI
26.	Watson Pharmaceuticals, China Ltd	BVI
27.	Med All Enterprise Consulting (Shanghai) Co. Ltd.	China
28.	Nicobrand Limited	Northern Ireland
29.	Watson Pharmaceuticals International Ltd.	BVI
30.	Watson Diagnostics, Inc.	Delaware
31.	Actavis Laboratories NY, Inc.	New York
32.	Circa Pharmaceuticals West, Inc.	California
33.	Circa Sub	New York
34.	Andrx LLC	Delaware
35.	Andrx South Carolina I, Inc.	South Carolina
36.	Andrx Pharmaceuticals (Mass), Inc.	Florida
37.	Andrx Pharmaceuticals Equipment #1, LLC	Florida
38.	Andrx Pharmaceuticals (NC) Inc.	Florida
39.	Andrx Pharmaceuticals, (NC) Equipment LLC	Delaware
40.	SR Six, Inc.	Florida
41.	RxAPS, Inc.	Florida
42.	Andrx Pharmaceuticals Sales and Marketing, Inc.	Florida
43.	Actavis Laboratories FL, Inc.	Florida

	Company Name	*Jurisdiction of Incorporation*
44.	Watson Management Corporation	Florida
45.	Watson Therapeutics, Inc.	Florida
46.	Andrx Pharmaceuticals, LLC	Delaware
47.	Andrx Labs LLC	Delaware
48.	Andrx Laboratories (NJ) Inc.	Delaware
49.	Watson Cobalt Holdings, LLC	Delaware
50.	Watson Manufacturing Services, Inc.	Delaware
51.	Natrapac, Inc.	Utah
52.	Coventry Acquisition, LLC	Delaware
53.	Cobalt Laboratories, LLC	Delaware
54.	Watson Pharma Private Ltd.	India
55.	Watson Laboratories, LLC	Delaware
56.	Actavis Puerto Rico Holdings Inc.	Delaware
57.	Actavis US Holding LLC	Delaware
58.	Actavis LLC	Delaware
59.	Actavis South Atlantic LLC	Delaware
60.	Actavis Elizabeth LLC	Delaware
61.	Actavis Kadian LLC	Delaware
62.	Actavis Mid Atlantic LLC	Delaware
63.	Actavis Totowa LLC	Delaware
64.	Actavis Pharmaceuticals NJ, Inc.	Delaware
65.	Watson Laboratories, Inc.	Connecticut
66.	Watson Laboratories, Inc. – Arizona	Delaware

	Company Name	*Jurisdiction of Incorporation*
67.	Schein Bayer Pharmaceutical Services, Inc.	Delaware
68.	Schein Pharmaceutical International, Inc.	Delaware
69.	Schein Pharmaceutical Ltd	Bermuda
70.	Marsam Pharma, LLC	Delaware
71.	MSI, Inc.	Delaware
72.	Actavis Holding 2 Sàrl	Luxembourg
73.	Actavis Services (Asia) Ltd.	Malta
74.	Arrow Laboratories, Ltd.	Malta
75.	Arrow Supplies, Ltd.*	Malta
76.	Marrow Pharmaceuticals Research & Development Co Ltd. (50%)	China
77.	Actavis S.à.r.l.	Luxembourg
78.	“Specifar”	Greece
79.	Alet	Greece
80.	Ascent Pharmahealth Pty Ltd	Australia
81.	Actavis Australia Pty Ltd	Australia
82.	Ascent Australia Pty Ltd	Australia
83.	Actavis Pty Ltd	Australia
84.	Ascent Pharma Pty Ltd.	Australia
85.	Ascent Pharmahealth Asia Pte Ltd	Singapore
86.	Drug Houses of Australia Pte Ltd.	Singapore
87.	Ascent Pharmahealth Hong Kong Ltd.	Hong Kong
88.	Actavis Sdn. Bhd.	Malaysia
89.	Arrow Group ApS	Denmark

	Company Name	*Jurisdiction of Incorporation*
90.	Arrow ApS	Denmark
91.	Makewhey Products Pty. Ltd.**	South Africa
92.	Actavis Holdings South Africa (Pty) Ltd.	South Africa
93.	Actavis Pharma (Pty) Ltd.	South Africa
94.	Actavis (Pty) Ltd.	South Africa
95.	Scriptpharm Marketing (Pty) Ltd	South Africa
96.	Referral-Net (Pty) Ltd.*	South Africa
97.	Spear Pharmaceuticals (Pty) Ltd	South Africa
98.	Pharmascript Pharmaceuticals Ltd. (64.8%)	South Africa
99.	Arrow Pharma Tender (Pty) Ltd.** (65%)	South Africa
100.	Zelphy 1308 (Pty) Ltd.	South Africa
101.	Arrowblue Produtos Farmaceuticos SA	Portugal
102.	Bowmed Ltd	UK
103.	Selamine Ltd.	Ireland
104.	Seeker Investments Ltd.	BVI
105.	SC Pharma (Pty) Ltd. (25%)	Australia
106.	Willow Pharmaceuticals Pty Ltd.	Australia
107.	Medis Pharma Pty Ltd	Australia
108.	Eremad Pty Ltd.	Australia
109.	Arrow Läkemedel AB	Sweden
110.	Arrow Generics Ltd.	UK
111.	Arrow No 7 Ltd	UK
112.	Breath Ltd	UK

	Company Name	*Jurisdiction of Incorporation*
113.	Soosysoo Ltd. (50%)**	BVI
114.	Actavis New Zealand Limited	New Zealand
115.	Watson Laboratories, S. de R.L. de C.V	Mexico
116.	Actavis Pharma Company	Canada
117.	Abri Pharmceuticals Company	Canada
118.	Actavis Pharma Holding 4 ehf. (APH4)	Iceland
119.	Actavis Pharma Holding 5 ehf. (APH5)	Iceland
120.	Actavis Group ehf.	Iceland
121.	Actavis Group PTC ehf.	Iceland
122.	Actavis Dutch Holding BV	Netherlands
123.	LLC Actavis	Russia
124.	Actavis Ilaclari AS #	Turkey
125.	Actavis ehf.	Iceland
126.	Medis ehf.	Iceland
127.	Medis Pharma France SAS	France
128.	Medis-Danmark A/S.*	Denmark
129.	Actavis Ireland Ltd.	Ireland
130.	Actavis Italy S.p.A.	Italy
131.	Actavis Isle of Man Ltd.	Isle of Man
132.	Actavis Nordic A/S	Denmark
133.	Actavis Oy	Finland
134.	UAB Actavis Baltics	Lithuania
135.	Actavis Holding AB	Sweden

	Company Name	*Jurisdiction of Incorporation*
136.	Actavis AB	Sweden
137.	Actavis Holding Germany GmbH	Germany
138.	Medis Pharma GmbH	Germany
139.	Actavis A/S	Denmark
140.	Actavis Norway AS	Norway
141.	Actavis, S. de. R.L. de C.V.	Mexico
142.	Actavis Pharma S. de R.L. de C.V.	Mexico
143.	Actavis Hungary Kft.	Hungary
144.	Arrow Pharm (Malta) Ltd.	Malta
145.	Medis Pharma BV	Netherlands
146.	PharmaPack International B.V.	Netherlands
147.	Actavis Polska Sp. z.o.o.	Poland
148.	Actavis International Ltd.	Malta
149.	Actavis Malta Ltd.	Malta
150.	Actavis Export International Ltd.	Malta
151.	Actavis Ltd. (Note: 1 share owned by Dr. Vella)	Malta
152.	Actavis GmbH	Austria
153.	Actavis Holdings UK Ltd.	UK
154.	Actavis Holdings UK II Ltd.	UK
155.	Actavis UK Ltd.	UK
156.	Warner Chilcott Acquisition Limited	UK
157.	Chilcott UK Limited	Northern Ireland
158.	Warner Chilcott Research Laboratories Ltd.	Northern Ireland

	Company Name	*Jurisdiction of Incorporation*
159.	Warner Chilcott UK Limited	Northern Ireland
160.	Warner Chilcott Pharmaceuticals UK Limited	UK
161.	Millbrook (NI) Limited	Northern Ireland
162.	Auden Mckenzie Holdings Ltd.	UK
163.	Auden Mckenzie (Pharma Division) Ltd.	UK
164.	NRIM Ltd.	UK
165.	Lime Pharma Ltd.	UK
166.	D3 Pharma Ltd. (38%)	UK
167.	Actavis d.o.o. Belgrade	Serbia
168.	Lotus Laboratories Private Ltd.	India
169.	Actavis Ukraine LLC	Ukraine
170.	Zdravlje AD	Serbia
171.	Actavis Switzerland AG	Switzerland
172.	Oncopharma AG	Switzerland
173.	Sindan Pharma SRL	Romania
174.	Actavis SRL	Romania
175.	Actavis CZ a.s.	Czech Republic
176.	Actavis S.r.o.	Slovak Republic
177.	Biovena Pharma Sp. z.o.o.	Poland
178.	Actavis (Cyprus) Ltd.	Cyprus
179.	Actavis Operations EOOD	Bulgaria
180.	Balkanpharma Troyan AD (98.32%)	Bulgaria
181.	Balkanpharma Dupnitsa AD (98.05%)	Bulgaria

	Company Name	*Jurisdiction of Incorporation*
182.	Balkanpharma Security EOOD	Bulgaria
183.	Balkanpharma Healthcare International (Cyprus) Ltd.*	Cyprus
184.	Actavis EAD	Bulgaria
185.	Actavis Istanbul Ilac Sanayive Ticaret Ltd. Sirketi	Turkey
186.	Actavis (MEEA) FZE	UAE
187.	Actavis Farmacêutica Limitada	Brazil
188.	Actavis Holding Asia BV	Netherlands
189.	Actavis Hong Kong Limited	Hong Kong
190.	China Medicinal & Chemical Industrial Development Group Ltd. (10% interest)	Hong Kong
191.	Actavis Pharma Development Centre Private Ltd.	India
192.	Actavis Pharma Private Ltd.	India
193.	PT Actavis Indonesia	Indonesia
194.	Actavis KK	Japan
195.	Actavis (Asia Pacific) Pte. Ltd.	Singapore
196.	Silom Medical Co., Ltd	Thailand
197.	Silom Medical International Co., Ltd.	Thailand
198.	Forest Laboratories UK Ltd.	UK
199.	Pharmax Ltd.	UK
200.	Forest Pharma BV	Netherlands
201.	Forest Laboratories Osterreich GmbH	Austria
202.	Forest Laboratories France S.A.S.	France
203.	Forest Laboratories Deutschland GmbH	Germany

	Company Name	*Jurisdiction of Incorporation*
204.	Forest Laboratories Italy S.r.L.	Italy
205.	Forest Laboratories Spain, SL	Spain
206.	Axcan France (Invest) SAS	France
207.	Aptalis Pharma SAS	France
208.	Forest Tosara Ltd.	Ireland
209.	Actavis Laboratories UT, Inc.	Delaware
210.	Watson Laboratories, Inc.	Nevada
211.	Actavis Pharma, Inc.	Delaware
212.	Arrow International Ltd.	Malta
213.	Allergan UK Group Ltd.	UK
214.	Actavis Finance ehf.	Iceland
215.	Actavis Holdco US, Inc.	Delaware

* In Liquidation ** De-Registered

EXHIBIT K
Subdivision and Special District Settlement Participation Form

Governmental Entity:	State:
Authorized Official:	
Address 1:	
Address 2:	
City, State, Zip:	
Phone:	
Email:	

The governmental entity identified above ("*Governmental Entity*"), in order to obtain and in consideration for the benefits provided to the Governmental Entity pursuant to the Agreement dated November 22, 2022 ("*Allergan Settlement*"), and acting through the undersigned authorized official, hereby elects to participate in the Allergan Settlement, release all Released Claims against all Released Entities, and agrees as follows.

1. The Governmental Entity is aware of and has reviewed the Allergan Settlement, understands that all terms in this Election and Release have the meanings defined therein, and agrees that by this Election, the Governmental Entity elects to participate in the Allergan Settlement as provided therein.

2. Following the execution of this Settlement Participation Form, the Governmental Entity shall comply with Section III.B of the Allergan Settlement regarding Cessation of Litigation Activities.

3. The Governmental Entity shall, within fourteen (14) days of the Reference Date and prior to the filing of the Consent Judgment, file a request to dismiss with prejudice any Released Claims that it has filed. With respect to any Released Claims pending in *In re National Prescription Opiate Litigation*, MDL No. 2804, the Governmental Entity authorizes the MDL Plaintiffs' Executive Committee to execute and file on behalf of the Governmental Entity a Stipulation of Dismissal With Prejudice substantially in the form found at [link to national settlement website page to be provided].

4. The Governmental Entity agrees to the terms of the Allergan Settlement pertaining to Subdivisions and Special Districts as defined therein.

5. By agreeing to the terms of the Allergan Settlement and becoming a Releasor, the Governmental Entity is entitled to the benefits provided therein, including, if applicable, monetary payments beginning after the Effective Date.

6. The Governmental Entity agrees to use any monies it receives through the Allergan Settlement solely for the purposes provided therein.

7. The Governmental Entity submits to the jurisdiction of the court in the Governmental Entity's state where the Consent Judgment is filed for purposes limited to that court's role as provided in, and for resolving disputes to the extent provided in, the Allergan Settlement.

8. The Governmental Entity has the right to enforce the Allergan Settlement as provided therein.

9. The Governmental Entity, as a Participating Subdivision or Participating Special District, hereby becomes a Releasor for all purposes in the Allergan Settlement, including, but not limited to, all provisions of **Section V (Release)**, and along with all departments, agencies, divisions, boards, commissions, Subdivisions, districts, instrumentalities of any kind and attorneys, and any person in their official capacity whether elected or appointed to serve any of the foregoing and any agency, person, or other entity claiming by or through any of the foregoing, and any other entity identified in the definition of Releasor, provides for a release to the fullest extent of its authority. As a Releasor, the Governmental Entity hereby absolutely, unconditionally, and irrevocably covenants not to bring, file, or claim, or to cause, assist in bringing, or permit to be brought, filed, or claimed, or to otherwise seek to establish liability for any Released Claims against any Released Entity in any forum whatsoever. The releases provided for in the Allergan Settlement are intended to be broad and shall be interpreted so as to give the Released Entities the broadest possible bar against any liability relating in any way to Released Claims and extend to the full extent of the power of the Governmental Entity to release claims. The Allergan Settlement shall be a complete bar to any Released Claim.

10. The Governmental Entity hereby takes on all rights and obligations of a Participating Subdivision or Participating Special District as set forth in the Allergan Settlement.

11. In connection with the releases provided for in the Allergan Settlement, each Governmental Entity expressly waives, releases, and forever discharges any and all provisions, rights, and benefits conferred by any law of any state or territory of the United States or other jurisdiction, or principle of common law, which is similar, comparable, or equivalent to § 1542 of the California Civil Code, which reads:

> **General Release; extent.** A general release does not extend to claims that the creditor or releasing party does not know or suspect to exist in his or her favor at the time of executing the release that, if known by him or her, would have materially affected his or her settlement with the debtor or released party.

A Releasor may hereafter discover facts other than or different from those which it knows, believes, or assumes to be true with respect to the Released Claims, but each Governmental Entity hereby expressly waives and fully, finally, and forever settles, releases and discharges, upon the Effective Date, any and all Released Claims that may exist as of such date but which Releasors do not know or suspect to exist, whether through ignorance, oversight, error, negligence or through no fault whatsoever, and which, if known, would

materially affect the Governmental Entities' decision to participate in the Allergan Settlement.

12. Nothing herein is intended to modify in any way the terms of the Allergan Settlement, to which the Governmental Entity hereby agrees. To the extent this Settlement Participation Form is interpreted differently from the Allergan Settlement in any respect, the Allergan Settlement controls.

I have all necessary power and authorization to execute this Settlement Participation Form on behalf of the Governmental Entity.

Signature: _____

Name: _____

Title: _____

Date: _____

EXHIBIT L
Settlement Fund Administrator

(Plaintiffs to Add)

EXHIBIT M-1
Payment Schedule

EXHIBIT M-1: PAYMENT SCHEDULE

Payment Year	Additional Restitution Amount & All Attorneys' Fees & Costs Funds	Base Payments (45%)	Incentives A, B, & C (maximum) (48%)	Incentive D Part 1 (maximum) (3.5%)	Incentive D Part 2 (maximum) (3.5%)	Total Abatement	Overall Total
Year 1 2023: Effective Date + 30 days	$55,774,789.29	$257,026,678.71	---	---	---	$257,026,678.71	$312,801,468.00
Year 2 July 15, 2024	$55,774,789.29	$113,091,738.63	$143,934,940.08	---	---	$257,026,678.71	$312,801,468.00
Year 3 July 15, 2025	$55,774,789.27	$113,091,738.63	$143,934,940.08	---	---	$257,026,678.71	$312,801,467.98
Year 4 July 15, 2026	$55,774,789.27	$81,605,970.49	$143,934,940.08	$31,485,768.14	---	$257,026,678.71	$312,801,467.98
Year 5 July 15, 2027	---	$81,605,970.50	$143,934,940.08	$31,485,768.14	---	$257,026,678.72	$257,026,678.72
Year 6 July 15, 2028	---	$81,605,970.50	$143,934,940.08	---	$31,485,768.14	$257,026,678.72	$257,026,678.72
Year 7 July 15, 2029	---	$81,605,970.49	$143,934,940.08	---	$31,485,768.15	$257,026,678.72	$257,026,678.72
Total	**$223,099,157.12**	**$809,634,037.95**	**$863,609,640.48**	**$62,971,536.28**	**$62,971,536.29**	**$1,799,186,751.00**	**$2,022,285,908.12**

NOTES:

1. All figures for the base and incentive payments are maximum figures that reflect the following:
   - The credits amount of $350,686,276 for prior settlements, including San Francisco, have already been applied.
   - An assumption that all Eligible States are Settling States.
   - An assumption that all incentives are earned.

2. The Additional Restitution Amount and the state and subdivision fees and costs amounts are broken out into separate columns in Exhibit M-2.

3. Any offsets under Section VII.C for Non-Settling States would be deducted from the base payments and the maximum incentive payments (A, B & C and D) by subtracting from all payments the amount of the payment times the State Allocation Percentage assigned to each Non-Settling State in Exhibit F-2.

EXHIBIT M-2: PAYMENT SCHEDULE FOR FEE FUNDS, COST FUNDS AND ADDITIONAL RESTITUTION
(Breakdown of Second Column in Exhibit M-1)

Payment Year	Attorney Fee and Cost Fund (Subdivisions)	State Cost Fund	State Outside Counsel Fee Fund	Additional Restitution Amount	Total (Shown in Ex. M-1, 2nd Column)
Year 1 2023: Effective Date + 30 days	$46,778,855.53	$3,598,373.50	$2,698,780.13	$2,698,780.13	$55,774,789.29
Year 2 July 15, 2024	$46,778,855.53	---	$4,497,966.88	$4,497,966.88	$55,774,789.29
Year 3 July 15, 2025	$46,778,855.52	---	$4,497,966.88	$4,497,966.87	$55,774,789.27
Year 4 July 15, 2026	$46,778,855.52	---	$4,497,966.87	$4,497,966.88	$55,774,789.27
Total	$187,115,422.10	$3,598,373.50	$16,192,680.76	$16,192,680.76	$223,099,157.12

EXHIBIT N
Additional Restitution Amount Allocation

Alabama	2.3235064275%
American Samoa	0.0249290899%
Arizona	3.4587568289%
Arkansas	1.3572625067%
California	14.4450765453%
Colorado	2.4192554291%
Connecticut	1.8837281232%
District of Columbia	0.2620389205%
Guam	0.0699391581%
Illinois	4.8429924684%
Indiana	3.2276944929%
Iowa	1.0802095029%
Kansas	1.1415833881%
Maine	0.7706700866%
Maryland	3.0729495134%
Massachusetts	3.3539006587%
Michigan	4.9531894399%
Minnesota	1.8887504448%
Missouri	2.9201303591%
Montana	0.4550557494%
N. Mariana Islands	0.0243230499%
Nebraska	0.6073579252%
New Hampshire	0.8422452854%
New Jersey	4.0113502576%
North Carolina	4.7322180042%
North Dakota	0.2475488543%
Oregon	2.0006852452%
Pennsylvania	6.6802688492%
South Carolina	2.2411620291%
Tennessee	3.9138188795%
Texas	9.1626320793%
Utah	1.6695130485%
Vermont	0.3705243381%
Virgin Islands	0.0459606175%
Virginia	3.3197424763%
Washington	3.3762173891%
Wisconsin	2.5599397925%
Wyoming	0.2428727457%

EXHIBIT O
Adoption of a State-Subdivision Agreement

A State-Subdivision Agreement shall be applied if it meets the requirements of **Section VIII** and is approved by the State and by the State's Subdivisions as follows:

1. *Requirements for Approval.* A State-Subdivision Agreement shall be deemed as agreed to when it has been approved by the State and either (a) Subdivisions whose aggregate "Population Percentages," determined as set forth below, total more than sixty percent (60%), or (b) Subdivisions whose aggregate Population Percentages total more than fifty percent (50%) provided that these Participating Subdivisions also represent fifteen percent (15%) or more of the State's counties or parishes (or, in the case of Settling States whose counties and parishes do not function as local governments, 15% of or more of the Settling State's non-county Subdivisions), by number.

2. *Approval Authority.* Approval by the State shall be by the Attorney General. Approval by a Subdivision shall be by the appropriate official or legislative body pursuant to the required procedures for that Subdivision to agree to a legally binding settlement.

3. *Population Percentage Calculation.* For purposes of this **Exhibit O** only, Population Percentages shall be determined as follows: For States with functional counties or parishes[1], the Population Percentage of each county or parish shall be deemed to be equal to (a) (1) two hundred percent (200%) of the population of such county or parish, minus (2) the aggregate population of all Primary Incorporated Municipalities located in such county or parish, divided by (b) two hundred percent (200%) of the State's population. A "Primary Incorporated Municipality" means a city, town, village or other municipality incorporated under applicable state law with a population of at least 25,000 that is not located within another incorporated municipality. The Population Percentage of each Primary Incorporated Municipality shall be equal to its population (including the population of any incorporated or unincorporated municipality located therein) divided by two hundred percent (200%) of the State's population; *provided* that the Population Percentage of a Primary Incorporated Municipality that is not located within a county shall be equal to two hundred percent (200%) of its population (including the population of any incorporated or unincorporated municipality located therein) divided by two hundred percent (200%) of the State's population. For all States that do not have functional counties or parishes, the Population Percentage of each non-county Subdivision

[1] Certain states do not have counties or parishes that have functional governments, including Alaska, Connecticut, Massachusetts, Rhode Island, and Vermont.

(including any incorporated or unincorporated municipality located therein), shall be equal to its population divided by the State's population.

4. *Preexisting Agreements and Statutory Provisions.* A State may include with the notice to its Subdivisions an existing agreement, a proposed agreement, or statutory provisions regarding the distribution and use of settlement funds and have the acceptance of such an agreement or statutory provision be part of the requirements to be an Initial Participating Subdivision.

5. *Revised Agreements.* A State-Subdivision Agreement that has been revised, supplemented, or refined shall be applied if it meets the requirements of **Section VIII** and is approved by the State and by the State's Subdivisions pursuant to the terms above.

EXHIBIT P
Injunctive Relief

I. DEFINITIONS

A. "*Health Care Provider(s)*" means any physician or other health care practitioner who is licensed to provide health care services or to prescribe pharmaceutical medications and any medical facility, practice, hospital, clinic, pharmacy, or any other health facility that provides health care services or prescribes or dispenses pharmaceutical medications.

B. "*In-Kind Support*" means payment or assistance in the form of goods, commodities, services, or anything else of value.

C. "*Lobby*" and "*Lobbying*" shall have the same meaning as "lobbying activities" and "lobbying contacts" under the federal lobbying disclosure act, 2 U.S.C. § 1602 *et seq.*, and any analogous state or local provisions governing the person or entity being lobbied. As used in this document, "Lobby" and "Lobbying" include Lobbying directly or indirectly, through grantees or Third Parties.

D. "*Opioid(s)*" means all naturally occurring, synthetic, or semisynthetic substances that interact with mu-opioid receptors primarily in the central nervous system and have demonstrated addictive properties.

E. "*Opioid-Induced Side Effects Treatment Product(s)*" shall mean any pharmaceutical product that has been approved by the U.S. Food & Drug Administration ("FDA") and expressly indicated for the treatment of a specified "Opioid-induced" side effect (such as Movantik® which is "an opioid antagonist indicated for the treatment of opioid-induced constipation"). The term "Opioid-Induced Side Effects Treatment Product(s)" shall not include pharmaceutical products that may treat medical conditions that may also be side effects of Opioids or Opioid Products or that may treat someone who uses or has a history of using Opioids or Opioid Products and was diagnosed with certain medical conditions (e.g., anxiety, depression, and Hepatitis C), unless the FDA approved indication states that it is approved to treat a specific "Opioid-induced" side effect by expressly referencing that the side effect was caused by an Opioid or Opioid Product (e.g., "Opioid-induced"). Also, by way of example, the term "Opioid-Induced Side Effects Treatment Product(s)" shall not include the following pharmaceutical medications: BOTOX®, CELEXA®, FETIZMA®, HUMIRA®, LEXAPRO®, LINZESS®, NIMBEX®, ORIAHNN®, ORILISSA®, QULIPTA®, RINVOQ®, SAVELLA®, UBRELVY®, ULTANE®, ULTANE NOVAPLUS®, VIBERZI®, or VIEKIRA PAK®.

F. "*Opioid Product(s)*" means all past, current, and future medications containing Opioids approved by the FDA and listed by the U.S. Drug Enforcement Agency ("DEA") as Schedule II, III, or IV drugs pursuant to the federal Controlled

Substances Act (including but not limited to buprenorphine, codeine, fentanyl, hydrocodone, hydromorphone, meperidine, methadone, morphine, oxycodone, oxymorphone, tapentadol, and tramadol). The term "Opioid Product(s)" shall not include (1) methadone, buprenorphine, and other substances when used exclusively to treat opioid abuse, addiction, OUD, or overdose; or (2) raw materials, immediate precursors, and/or active pharmaceutical ingredients ("APIs") used in the manufacture or study of Opioids or Opioid Products, but only when such materials, immediate precursors, and/or APIs are sold or marketed exclusively to DEA-licensed manufacturers or DEA-licensed researchers. Also, by way of example, the terms "Opioid(s)" and "Opioid Product(s)" shall not include pharmaceutical medications that may relieve pain but not by interacting with mu-opioid receptors primarily in the central nervous system, such as BOTOX®, CELEXA®, FETIZMA®, HUMIRA®, LEXAPRO®, LINZESS®, NIMBEX®, ORIAHNN®, ORILISSA®, QULIPTA®, RINVOQ®, SAVELLA®, UBRELVY®, ULTANE®, ULTANE NOVAPLUS®, VIBERZI®, or VIEKIRA PAK®.

G. "*OUD*" means opioid use disorder defined in the *Diagnostic and Statistical Manual of Mental Disorders, Fifth Edition (DSM–5)*, as updated or amended.

H. "*Settling State*" shall mean each State or United States territory that meets the participation requirements for becoming a Settling State under **Section II** of the Allergan Public Global Settlement Agreement and then participates in the Allergan Public Global Settlement Agreement.

I. *"Promote*," "*Promoting*," "*Promotion*," and "*Promotional*" shall mean dissemination of information or other practices intended or that could reasonably be anticipated to increase the sale, prescription, or utilization of prescription products or that attempt to influence prescribing practices or formulary decisions in the Settling States.

J. "*Third Party(ies)*" means any person or entity other than Allergan or a Releasor.

K. "*Treatment of Pain*" means the provision of therapeutic modalities to alleviate or reduce pain.

L. "*Unbranded Information*" means any information that does not identify a specific branded or generic product.

II. INJUNCTIVE RELIEF

Allergan does not currently manufacture, sell, Promote, or Lobby for any Opioids or Opioid Products. As provided below, Allergan shall not manufacture, sell, Promote, or Lobby for any Opioids or Opioid Products in or for distribution in the Settling States or in a manner that directly affects the Settling States. However, the Parties acknowledge that certain Opioids or Opioid Products sold by Allergan prior to 2021 may still be circulating in the marketplace outside the possession and control of Allergan and the same is not a breach of any terms within this **Exhibit P**. Further, Allergan does not currently manufacture, sell, Promote, or Lobby for any Opioid-Induced Side Effects Treatment Products, and does not have any current intentions to do so in the

future. For the avoidance of doubt, only the Settling States shall have the ability to enforce the terms of this Agreement.

For purposes of this **Exhibit P** only, *Allergan* means Allergan Finance, LLC (f/k/a Actavis, Inc., which, in turn, was f/k/a Watson Pharmaceuticals, Inc.), Allergan Limited (f/k/a Allergan plc which, in turn, was f/k/a Actavis plc), and AbbVie Inc., and each of their respective parents (as applicable), subsidiaries, successors, affiliates, and officers, directors, employees, representatives, and agents under the control of the foregoing.

A. Compliance Duration

1. Unless addressed in Section II.A.2 below, each term of Section II of this **Exhibit P** shall be effective for ten (10) years from the Effective Date and is limited to conduct that involves or affects the Settling States.

2. The provisions of Section II.H.1, Section II.H.2, and Section II.I shall not be subject to any term.

3. Nothing in this **Exhibit P** shall relieve Allergan of its independent obligation to fully comply with the laws of the Settling States before or after expiration of the injunction period specified in this subsection.

B. Ban on Selling and Manufacturing Opioids

1. Allergan shall not manufacture or sell any Opioids or Opioid Products for distribution in the Settling States. Allergan represents that Kadian® and Norco® were voluntarily discontinued by the end of 2020 and that the last inventory shipped will expire on or before June 30, 2023.

C. Ban on Promotion

1. Allergan shall not engage in Promotion of Opioids or Opioid Products, including but not limited to, by:

   a. Employing or contracting with sales representatives, Health Care Providers, any Third Party, or other persons to Promote Opioids or Opioid Products to (i) Health Care Providers, (ii) patients, (iii) third-party payors (e.g., any entity, other than an individual, that pays or reimburses for the dispensing of prescription medicines, including but not limited to manage care organizations and pharmacy benefit managers), or (iv) persons involved in determining formulary access or treatment guidelines to Promote Opioids or Opioid Products;

   b. Using speakers, key opinion leaders, thought leaders, lecturers, and/or speaking events for Promotion of Opioids or Opioid Products;

c. Creating or distributing (directly or indirectly through Third Parties) Promotional materials (such as advertisements) that Promote Opioids or Opioid Products, including but not limited to brochures, newsletters, pamphlets, journals, books, guides, websites or internet advertisements, social media accounts or networks, and providing hyperlinks, engaging in internet search engine optimization, or otherwise directing internet traffic by improving rankings or making content appear among the top results in an internet search or otherwise be more visible or more accessible to the public on the internet to Promote Opioids or Opioid Products; and

d. Disseminating Unbranded Information (such as about a medical condition or disease state) that contains links to branded Promotional information about Opioids or Opioid Products or that generates data that Allergan uses to Promote Opioids or Opioid Products.

2. Allergan shall not engage in the following specific Promotion of Treatment of Pain to Promote Opioids or Opioid Products.

a. Allergan shall not Promote the Treatment of Pain to Promote Opioids, except that Allergan may continue to Promote the Treatment of Pain with non-Opioids.

b. Allergan shall not knowingly Promote the Treatment of Pain to Promote Opioids through Third Parties, except that Allergan may continue to Promote the Treatment of Pain with non-Opioids.

c. Allergan shall not Promote the concept that pain is undertreated to Promote Opioids or Opioid Products.

d. Allergan shall not knowingly Promote the concept that pain is undertreated through Third Parties to Promote Opioids or Opioid Products.

3. Allergan shall not engage in the following specific Promotion of Opioid-Induced Side Effects Treatment Products to Promote Opioids or Opioid Products.

a. Allergan shall not Promote Opioid-Induced Side Effects Treatment Products with or by referring directly to Opioids or Opioid Products (including with Unbranded Information).

b. Allergan shall not knowingly Promote Opioid-Induced Side Effects Treatment Products with or by referring directly to Opioids or Opioid Products through Third Parties.

c. Nothing in this section shall prevent Allergan from conveying the information contained in an FDA-approved label in the course of Promotion of Opioid-Induced Side Effects Treatment Products.

4. Section II.C.1-3 is not intended and shall not be interpreted to prohibit or restrict any and all discussions or references to Opioids or Opioid Products or any Allergan conduct (including Promotion) related to non-Opioid Products (including those that are approved for the Treatment of Pain or Opioid-Induced Side Effects Treatment Products) when doing so is not to Promote Opioids or Opioid Products, including, for example, (a) if certain patient populations, such as those with a history of abuse of Opioids or Opioid Products, are identified as having a higher prevalence of other conditions, such as Hepatitis C, or being appropriate candidates for treatment of those other conditions, (b) if such discussions or references relate to products that may treat medical conditions that may also be side effects of Opioids or Opioid Products (e.g., anxiety, depression, and Hepatitis C), and/or (c) if such discussions or references relate to the Promotion of BOTOX®, CELEXA®, FETIZMA®, HUMIRA®, LEXAPRO®, LINZESS®, NIMBEX®, ORIAHNN®, ORILISSA®, QULIPTA®, RINVOQ®, SAVELLA®, UBRELVY®, ULTANE®, ULTANE NOVAPLUS®, VIBERZI®, or VIEKIRA PAK®.

5. Notwithstanding Sections II.C.1-3 directly above, Allergan may engage in non-Promotional conduct, including but not limited to the following:

a. Maintain a corporate website that includes Opioid Products on company's list of products that contains principally the following content: the FDA-approved package insert, medication guide, and labeling;

b. Maintain a product website for any Opioid Product that contains principally the following content: the FDA-approved package insert, medication guide, and labeling, and a statement directing patients or caregivers to speak with a licensed Health Care Provider;

c. Provide the following factual information about Opioid Products sold by Allergan prior to 2021 which may still be circulating in the marketplace outside the possession and control of Allergan: an Opioid Product's NDC, SKU, or other relevant information such as formulation, package size, dosage, or pricing;

d. Provide or collect information or support the provision or collection of information as expressly required by law or any state or federal government agency with jurisdiction in the Settling State where the information is provided (including but not limited to collecting and/or reporting adverse events related to Opioid Products);

e. Provide the following by mail, electronic mail, on or through Allergan's corporate or product websites, or through other electronic or digital methods: FDA-approved package insert, medication guide, and labeling for Opioid Products, or other prescribing information for Opioid Products that are published or approved by a state or federal government agency with jurisdiction in the Settling State where the information is provided;

f. Provide scientific and/or medical information in response to an unsolicited request by a Health Care Provider consistent with FDA standards, rules, regulations, and/or guidance, including, but not limited to, *Responding to Unsolicited Requests for Off-Label Information About Prescription Drugs and Medical Devices* (Dec. 2011) as updated or amended by the FDA, and Guidance for Industry, *Good Reprint Practices for the Distribution of Medical Journal Articles and Medical or Scientific Reference Publications on Unapproved New Uses of Approved Drugs and Approved or Cleared Medical Devices* (Jan. 2009) as updated or amended by the FDA;

g. Provide a response to any unsolicited question or request from a patient or caregiver, directing the patient or caregiver to the FDA-approved package insert, medication guide, and labeling for Opioid Products, to speak with a licensed Health Care Provider without describing the safety or effectiveness of any Opioid Product or naming any specific Health Care Provider, or to speak with their health insurance carrier regarding coverage of an Opioid Product;

h. Provide Health Care Economic Information, as defined at 21 U.S.C. § 352(a), to a payor, formulary committee, or other similar entity with knowledge and expertise in the area of health care economic analysis consistent with FDA standards, rules, regulations, and/or guidance, including, but not limited to, FDA's Draft Questions and Answers Guidance for Industry and Review Staff, *Drug and Device Manufacturer Communications With Payors, Formulary Committees, and Similar Entities* (Jan. 2018), as updated or amended by the FDA;

i. Conduct or provide financial support or In-Kind Support for bona fide scientific research; and

j. Draft, publish, or provide financial support or In-Kind Support for bona fide scientific publications.

6. To the extent that Allergan engages in conduct permitted by Section II.C.4 and 5 above, Allergan shall do so in a manner that is truthful, non-misleading, accurate, and non-deceptive.

D. No Financial Reward or Discipline Based on Volume of Opioid Product Sales

1. Allergan shall not provide financial incentives to its sales and marketing employees or discipline its sales and marketing employees based upon sales volume or sales quotas for Opioid Products.

2. Allergan shall not offer or pay any remuneration (including any compensation or rebate), directly or indirectly (e.g., through Third Parties), to any person in return for the prescribing, sale, use, or distribution of an Opioid Product (except to the extent a pre-existing contractual or legal requirement exists related to Opioid Products sold by Allergan before 2021).

E. Ban on Funding/Grants to Third Parties

1. Allergan shall not directly or indirectly provide financial support or In-Kind Support to any Third Party regarding conduct that Promotes Opioids or Opioid Products, including educational programs, brochures, newsletters, pamphlets, journals, books, guides, websites, or social media accounts or networks that Promote Opioids or Opioid Products, including Promoting Opioids or Opioid Products through the Promotion of Treatment of Pain, but excluding financial support otherwise required by this **Exhibit P**, a court order, a federal or state agency (e.g., FDA-approved Risk Evaluation and Mitigation Strategy (REMs)), or a federal or state law or regulation.

2. Allergan shall not directly or indirectly provide financial support or In-Kind Support to any Third Party for medical education programs to Promote Opioids or Opioid Products.

3. Allergan shall not create, sponsor, provide financial support or In-Kind Support to, or otherwise operate or control, any medical society or patient advocacy group related to conduct that Promotes Opioids or Opioid Products (including Promoting Opioids or Opioid Products through the Promotion of Treatment of Pain).

4. Allergan shall not provide links to any Third Party website or materials or otherwise distribute materials created by a Third Party for the purpose of Promoting Opioids or Opioid Products (including Promoting Opioids or Opioid Products through the Promotion of Treatment of Pain).

5. Allergan shall not use, assist, or employ any Third Party to engage in any activity that Allergan itself would be prohibited from engaging in pursuant to this **Exhibit P**. To the extent Allergan supports trade groups engaged in Lobbying, Allergan shall notify the trade groups at the time it makes its trade association payments that Allergan's support shall not be used to encourage the use of Opioids or Opioid Products or discourage the use of non-Opioids or Opioid Products for the purpose of indirectly encouraging

the use of Opioids or Opioid Products (but shall not be responsible for how the trade group ultimately uses the support provided because it is outside of Allergan's control).

6. Allergan shall not enter into any contract or agreement with any person or entity or otherwise attempt to influence any person or entity in such a manner that has the purpose or foreseeable effect of limiting the dissemination of information regarding the risks and side effects of using Opioids or Opioid Products.

7. No officer or Vice President-level employee of Allergan may concurrently serve as a director, board member, employee, agent, or officer of any entity that primarily engages in conduct that Promotes Opioids or Opioid Products. Nothing in this provision shall preclude an officer or Vice President-level employee of Allergan from concurrently serving on the board of a hospital.

8. Allergan shall play no role in appointing persons to the board, or hiring persons to the staff, of any Third Party that primarily engages in conduct that Promotes Opioids or Opioid Products. For avoidance of doubt, nothing in this paragraph shall prohibit Allergan from fully and accurately responding to unsolicited requests or inquiries about a person's fitness to serve as an employee or board member at any such Third Party.

F. Lobbying Restrictions

1. Allergan shall not Lobby for the enactment of any federal, state, or local legislative or regulatory provision that:

   a. Encourages or requires Health Care Providers to prescribe Opioids or Opioid Products or sanctions Health Care Providers for failing to prescribe Opioids or failing to treat pain with Opioids;

   b. Has the effect of limiting access to any non-Opioid alternative pain treatments; or

   c. Pertains to the classification of any Opioid or Opioid Product as a scheduled drug under the Controlled Substances Act.

2. Allergan shall not Lobby against the enactment of any federal, state, or local legislative or regulatory provision that supports:

   a. The use of non-pharmacologic therapy and/or non-Opioid pharmacologic therapy to treat chronic pain over or instead of Opioids or Opioid Products, including but not limited to Third Party payment or reimbursement for such therapies;

b. The use and/or prescription of immediate release Opioids or Opioid Products instead of extended-release Opioids or Opioid Products when an Opioid or Opioid Product is initiated, including but not limited to Third Party reimbursement or payment for such prescriptions;

c. The prescribing of the lowest effective dose of an Opioid or Opioid Product, including but not limited to Third Party reimbursement or payment for such prescriptions;

d. The limitation of initial prescriptions of Opioids or Opioid Products to treat acute pain;

e. The prescribing and other means of distribution of naloxone to minimize the risk of overdose, including but not limited to Third Party reimbursement or payment for naloxone;

f. The use of urine testing before starting use of Opioids or Opioid Products and annual urine testing when Opioids or Opioid Products are prescribed, including but not limited to Third Party reimbursement or payment for such testing;

g. Evidence-based treatment (such as using medication-assisted treatment with buprenorphine or methadone in combination with behavioral therapies) for OUD, including but not limited to Third Party reimbursement or payment for such treatment; or

h. The implementation or use of disposal systems when solely related to Opioids or Opioid Products (versus of general applicability to all pharmaceutical medications, for example).

3. Allergan shall not Lobby against the enactment of any federal, state, or local legislative or regulatory provision expanding the operation or use of Prescription Drug Monitoring Programs ("PDMPs"), including but not limited to provisions requiring Health Care Providers to review PDMPs when Opioid Product use is initiated and with every prescription thereafter.

4. Notwithstanding the foregoing restrictions in Sections II.F.1-3, the following conduct is not restricted:

a. Challenging the enforcement or interpretation of (including, but not limited to, suing for declaratory or injunctive relief) any laws, rules, or regulations;

b. Communications by Allergan in response to a law, rule, regulation, or order requiring such communication;

c. Communications by an Allergan representative appearing before a federal or state legislative, administrative, or regulatory body, committee, or subcommittee as a result of a mandatory order or subpoena commanding that person or Allergan's designee to testify;

d. Responding, in a manner consistent with this **Exhibit P**, to an unsolicited request for the input on the passage of legislation or the promulgation of any rule or regulation when such request is submitted in writing specifically to Allergan from a government entity directly involved in the passage of that legislation or promulgation of that rule or regulation; or

e. Lobbying for or against provisions of legislation, rule, or regulation that address subjects other than those identified in Sections II.F.1-3, so long as Allergan does not support specific portions of such legislation, rule, or regulation covered by Section II.F.1 or oppose specific portions of such legislation, rule, or regulation covered by Sections II.F.2-3. Allergan may Lobby for or against any legislation, rule, or regulation that may be covered by Sections II.F.1-3, if such legislation, rule, or regulation has general or specific provisions that affect medications beyond Opioids or Opioid Products, so long as Allergan's intent and purpose of doing so is not to Promote Opioids or Opioid Products.

G. Ban on Prescription Savings Programs

1. Allergan shall not directly or indirectly offer any discounts, coupons, rebates, or other methods which have the effect of reducing or eliminating a patient's co-payments or the cost of prescriptions (e.g., free trial prescriptions) for any Opioid Product (except to the extent a pre-existing contractual or legal requirement exists related to Opioid Products sold by Allergan before 2021).

2. Allergan shall not directly or indirectly provide financial support to any Third Party for discounts, coupons, rebates, or other methods which have the effect of reducing or eliminating a patient's co-payments or the cost of prescriptions (e.g., free trial prescriptions) for any Opioid Product (except to the extent a pre-existing contractual or legal requirement exists related to Opioid Products sold by Allergan before 2021).

3. Allergan shall not directly or indirectly assist patients or Health Care Providers with the claims and/or prior authorization process required for third-party payors to approve payment for any Opioid Product.

4. Allergan may directly or indirectly provide financial support or In-Kind Support for non-Opioids to any Third Party that provides patient assistance

or support services for the purposes of helping patients afford and gain access to the medications prescribed to them.

H. General Terms

1. Allergan shall not make any written or oral statement about Opioids or any Opioid Product that is unfair, false, misleading, deceptive or unconscionable as defined under the law of the Settling States. For purposes of this paragraph, "Opioid Product" shall also include methadone, buprenorphine, and other substances when used exclusively to treat opioid abuse, addiction, or overdose.

2. Allergan shall not represent that Opioids or any Opioid Product(s) have approvals, characteristics, uses, benefits, or qualities that they do not have. For purposes of this paragraph, "Opioid Product" shall also include methadone, buprenorphine, and other substances when used exclusively to treat opioid abuse, addiction, or overdose.

3. This **Exhibit P** shall not be construed or used as a waiver or limitation of any defense otherwise available to Allergan or any Released Entity in any action, and nothing in this **Exhibit P** is intended to or shall be construed to prohibit Allergan or any Released Entity in any way whatsoever from taking legal or factual positions with regard to any Opioid Products in prosecution or defense of litigation or other legal proceedings.

4. Upon the request of the Attorney General of any Settling State, Allergan shall provide the Attorney General with copies of the following, within forty-five (45) days of the request:

    a. Any litigation or civil or criminal law enforcement subpoenas or CID relating to Allergan's Opioid Product(s) that Allergan received after the Effective Date of the Agreement; and

    b. Warning or untitled letters issued by the FDA regarding Allergan's Opioid Product(s) and all correspondence between Allergan and the FDA related to such letters that Allergan received after the Effective Date of the Agreement.

5. Nothing in this **Exhibit P** shall be construed to limit or impair Allergan's ability to:

    a. Communicate its positions and/or respond to media inquiries concerning litigation, investigations, or other proceedings or matters relating to Allergan or its Opioid Products.

    b. Maintain a website explaining its litigation positions and responding to allegations concerning Allergan or its Opioid Products.

I. Compliance with All State Laws and Regulations Relating to the Sale, Promotion, and Distribution of Any Opioid Product

1. Allergan shall comply with all applicable State laws and regulations that relate to the sale, Promotion, distribution, and disposal of Opioids or Opioid Products in the Settling States, provided that nothing in this paragraph requires Allergan to violate federal law or regulations, including but not limited to:

    a. State Controlled Substances Act, including all guidance issued by the applicable state regulator(s);

    b. State Consumer Protection Laws; and

    c. State laws, regulations, and guidelines related to the prescribing, distribution, and disposal of Opioid Products.

J. Clinical Data Transparency

1. Allergan agrees to make available to an independent Third-Party data center or platform owner (e.g., Vivli) anonymized clinical data generated from Allergan-sponsored Phase II-IV interventional clinical studies—regardless of whether that data was submitted to a regulatory authority (e.g., FDA)—for branded opioid drugs that are Opioids or Opioid Products that have received an initial marketing authorization from a regulatory authority to the extent Allergan conducts a reasonable, good faith investigation to locate any such data and it is in Allergan's possession. Anonymized clinical data includes:

    a. Full analyzable data set(s) (including individual participant-level data de-identified);

    b. The clinical study report(s) redacted for commercial or personal identifying information;

    c. The full protocol(s) (including the initial version, final version, and all amendments); and

2. Full statistical analysis plan(s) (including all amendments and documentation for additional work processes); and Dataset Specifications, which describe the available dataset variables (such as age, race, blood pressure, lab values, etc.).

3. The independent Third Party will facilitate the disclosure of such clinical data to qualified researchers with a bona fide scientific research proposal as reviewed and approved by an independent review panel for scientific merit consistent with the panel's assessment criteria and pursuant to an agreed upon data use agreement.

4. Allergan shall not interfere with decisions made by the staff or reviewers associated with the independent Third-Party data center or platform owner.

5. Allergan shall bear all costs for making clinical data available pursuant to Section II.J.1 of this **Exhibit P**.

III. DOCUMENT DISCLOSURE

A. Documents Subject to Public Disclosure

The following documents must be provided to each Settling State and are subject to public disclosure in perpetuity, except for the redactions authorized by section B:

1. All Allergan-produced documents admitted as trial exhibits in *In re Opioid Litigation*, Index No. 400000/2017 (N.Y. Sup. Ct., Suffolk County), *The City and County of San Francisco, California and the People of the State of California, acting by and through San Francisco City Attorney David Chiu v. Purdue Pharma L.P., et al.*, Case No. 3:18-cv-07591 (N.D. Cal.), *The State of West Virginia ex rel. Patrick Morrisey, Attorney General v. Teva Pharmaceutical Industries Ltd., et al.*, Civil Action No. 19-C-104 BNE (W. Va. Cir. Ct., Boone County), or *The People of the State of California, acting by and through Santa Clara County Counsel James R. Williams, Orange County District Attorney Tony Rackauckas, Los Angeles County Counsel Mary C. Wickham, and Oakland City Attorney Barbara J. Parker v. Purdue Pharma L.P., et al.*, Case No. 30-2014-00725287-CU-BT-CXC (Cal. Super. Ct., Orange County), together with complete trial transcripts.

2. All Allergan deposition transcripts, and exhibits from or produced in the matters identified in subsection III.A.1, as well as in *In re Nat'l Prescription Opiate Litig.*, No. 1:17-md-02804 (N.D. Ohio).

3. All summary judgment filings, proposed findings of fact and law, and expert reports relating to the claims against Allergan that were filed in the matters identified in subsections III.A.1 and III.A.2, together with related exhibits.

4. All documents provided under this provision must be provided in an appropriate electronic format with appropriate metadata.

5. In addition, Allergan shall not object to public disclosure of the following documents, without further redaction: Acquired_Actavis_00000001-Acquired_Actavis_02689490.

B. Information That Allergan May Redact

1. The following categories of information are exempt from public disclosure:

a. Information subject to trade secret protection. A "trade secret" is information, including a formula, pattern, compilation, program, device, method, technique or process, that (a) derives independent economic value, actual or potential, from not being generally known to the public or to other persons who can obtain economic value from its disclosure and use; and (b) is the subject of efforts that are reasonable under the circumstances to maintain its secrecy. Even if the information falls within the definition, "trade secret" does not include information reflecting sales or promotional strategies, tactics, targeting, or data, or internal communications related to sales or promotion or information in documents dated more than five (5) years before the disclosure required by this section.

b. Confidential personal information. "Confidential personal information" means individual Social Security or tax identification numbers, personal financial account numbers, passport numbers, driver license numbers, home addresses, home telephone numbers, personal email addresses, and other personally identifiable information protected by law from disclosure. "Confidential personal information" does not include the names of Allergan's officers, directors, employees, consultants, agents, or attorneys or of prescribers or of officials of a government agency.

c. Information that is inappropriate for public disclosure because it is subject to personal privacy interests recognized by law (e.g., HIPAA), or contractual rights of third parties that Allergan may not abrogate.

d. Information regarding Allergan employees' personal matters unrelated to Allergan, including emails produced by Allergan custodians discussing vacation or sick leave, family, or other personal matters.

e. Information that is protected by the attorney–client or attorney work product privilege.

f. Financial documents designated as "Highly Confidential" or "Highly Confidential Information" under Case Management Order No. 2 in *In re Nat'l Prescription Opiate Litig.*, No. 1:17-md-02804 (N.D. Ohio) and produced in response to the April 3, 2019 Ruling Regarding Jurisdictional Discovery on Defendants Allergan, Teva, and Mallinckrodt, including tax returns including all schedules and attachments, policies regarding accounting, and annual reports.

C. Redaction of Documents Containing Protected Information

1. Whenever a document contains information subject to a claim of exemption pursuant to section B, Allergan will provide the document in redacted form. Such redactions must indicate that trade secret and/or private information, as appropriate, has been redacted. Redactions are limited to the minimum redactions possible, consistent with section B.

2. Allergan must provide to each Settling State a log noting each document redacted. The log must also provide fields stating the basis for redacting the document, with sufficient detail to allow an assessment of the merits of the assertion. The log is subject to public disclosure in perpetuity. The log shall be provided by the production deadline.

3. In addition to the redacted documents, Allergan shall, upon any Settling State's request, also produce all documents identified in subsection III.A above in unredacted form to such Settling State at the same time, but only to the extent the document was produced by Allergan in an unredacted form in the underlying litigation, and only for the purpose of permitting a merits assessment and potential challenge of the redaction pursuant to Section IV herein.

D. Public Disclosure Through a Document Repository

1. Each Settling State may publicly disclose all documents covered by this section through a public repository maintained by a governmental, non-profit, or academic institution. Each Settling State may specify the terms of any such repository's use of those documents, including allowing the repository to index and make searchable all documents subject to public disclosure, including the metadata associated with those documents.

E. Timeline for Production

1. Allergan shall produce all documents required by Section A within nine months from the Effective Date.

F. Support Payment

1. Within thirty (30) calendar days of the Effective Date, Allergan will make one-time payments totaling $1,375,000 to the University of California, San Francisco Foundation (UCSF Foundation) and The Johns Hopkins University, to be used to support a public repository of documents subject to this section.

IV. ENFORCEMENT

A. For the purposes of resolving disputes with respect to compliance with **Exhibit P**, should any of the Settling States have reason to believe that Allergan has violated a provision of **Exhibit P**, then such Settling State shall notify Allergan in writing of the specific objection, identify with particularity the provisions of **Exhibit P** that

the practice appears to violate, and give Allergan thirty (30) days to respond to the notification ("Response Period").

B. Upon receipt of written notice from any of the Settling States, Allergan shall provide a written response to the Settling State's notification, containing either a statement explaining why Allergan believes it is in compliance with **Exhibit P**, or a detailed explanation of how the alleged violation occurred and a statement explaining how and when Allergan intends to remedy or has remedied the alleged violation. Allergan may request a reasonable amount of additional time to cure any violation through such remedial measures ("Cure Period") and the Settling State shall not unreasonably withhold approval of such request.

C. The Settling State may not take any action concerning the alleged violation of **Exhibit P** during the Response and Cure Periods. Nothing shall prevent the Settling State from agreeing in writing to provide Allergan with additional time beyond the thirty (30) days to respond to the notice. However, the Settling State may take any action, including, but not limited to legal action to enforce compliance with the Consent Judgment, without delay if the Settling State believes that a threat to the health or safety of the public requires immediate action.

D. The Settling State may bring an action against Allergan to enforce the terms of **Exhibit P**, but only after providing Allergan an opportunity to respond to the notification and, if agreed upon, a period to cure any violation, as described above, or within any other period as agreed to by Allergan and the Settling State.

E. Nothing in this Consent Judgment shall be interpreted to limit any Settling State's Civil Investigative Demand ("CID") or investigative subpoena authority, to the extent such authority exists under applicable state law.

F. Nothing herein shall be construed to exonerate any failure to comply with any provision of **Exhibit P** after the Effective Date, or to compromise the authority of any Settling State to take action for any failure to comply with **Exhibit P**, consistent with this section.

EXHIBIT Q
[Intentionally Omitted]

EXHIBIT R
Agreement on Attorneys' Fees, Costs, and Expenses

This Agreement on Attorneys' Fees, Expenses, and Costs ("Fee Agreement") is entered between Teva, Allergan, and the Plaintiffs' Executive Committee appointed in the multidistrict litigation in the Northern District of Ohio, *In re National Prescription Opiate Litigation*, No. 1:17-md-02804 ("MDL PEC"), in connection with the Teva Global Opioid Settlement Agreement ("Teva Agreement") and the Allergan Public Global Opioid Settlement Agreement ("Allergan Agreement"). This Fee Agreement becomes effective on the Effective Date of the Teva Agreement and Allergan Agreement or the date that the Consent Judgments anticipated under the Teva Agreement and Allergan Agreement become final in 25 Settling States (whichever is later).

I. Definitions

A. This Fee Agreement incorporates all defined terms in the Teva Agreement and Allergan Agreement, unless otherwise defined herein, and shall be interpreted in a manner consistent with the Teva Agreement and Allergan Agreement.

B. *"Allergan."* Allergan Finance, LLC (f/k/a Actavis, Inc., which, in turn, was f/k/a/ Watson Pharmaceuticals, Inc.) and Allergan Limited (f/k/a Allergan plc, which, in turn, was f/k/a Actavis plc). *Allergan* does not include Teva Pharmaceuticals Industries Ltd. (*"Teva Ltd."*), Teva Pharmaceuticals USA, Inc. (*"Teva USA"*), Cephalon, Inc. (*"Cephalon"*), Actavis LLC (f/k/a Actavis Inc.) (*"Actavis LLC"*), Watson Laboratories, Inc. (*"Watson"*), Actavis Pharma, Inc. (f/k/a Watson Pharma, Inc.) (*"Actavis Pharma"*), Actavis Elizabeth LLC (*"Actavis Elizabeth"*), Actavis Kadian LLC (*"Actavis Kadian"*), Actavis Laboratories FL, Inc. (f/k/a Watson Laboratories, Inc. - Florida) (*"Actavis Labs FL"*), Actavis Laboratories UT, Inc. (f/k/a Watson Laboratories, Inc. - Utah) (*"Actavis Labs UT"*), Actavis Mid Atlantic LLC (*"Actavis Mid"*), Actavis South Atlantic LLC (*"Actavis South"*), Actavis Totowa LLC (*"Actavis Totowa"*), or Anda, Inc. (*"Anda"*).

C. "*Applicant*." Any Attorney or MDL Participating Counsel who seeks an award of attorneys' fees from the Attorney Fee Fund pursuant to the procedures established by the MDL Court and the Fee Panel.

D. "*Attorney*." Any of the following retained through a legal contingency fee or hourly fee contract: a solo practitioner, multi-attorney law firm, or other legal representative of a Participating Subdivision or MDL Participating Counsel. This does not include Subdivision in-house attorneys.

E. "*Attorney Fee Fund*." An account consisting of funds allocated to pay attorneys' fees approved pursuant to Section III of this Fee Agreement established by Order of and under the ongoing jurisdiction of the MDL Court, as provided below.

F. "*Common Benefit*." Work performed for the benefit of all Participating Subdivisions or Tribal Nations, including, but not limited to, pretrial matters,

discovery, trial preparation, trial, settlement negotiations, and all other work that advances the interests of the Participating Subdivisions.

G. "*Common Benefit Fund*." The sub fund of the Attorney Fee Fund described in subsection III.E.

H. "*Contingency Fee Fund*." The sub fund of the Attorney Fee Fund described in subsection III.F.

I. "*Cost and Expense Fund Administrator*." The administrator appointed by the MDL Court on August 12, 2021 (MDL Docket No. 3828), to administer the Cost Fund and its sub funds as provided in the Fee Agreement.

J. "*Court Common Benefit Fund*." The Common Benefit Fund established by the MDL Court in its orders of July 22, 2021, MDL Docket No. 3794, and May 9, 2022, MDL Docket No. 4428.

K. "*Fee Entitlement*." Any right, entitlement, or expectation, including but not limited to a fee contract, contingent fee contract, agreement, referral arrangement, co-counsel arrangement, State Back-Stop agreement, or any other arrangement by which counsel could receive compensation or other consideration. For the avoidance of doubt, the scope of Fee Entitlement under subparagraph III.G.3.a does not include any Attorneys' fees associated with representation of a State.

L. "*Fee Panel*." The three-person panel appointed by the MDL Court on August 12, 2021 (MDL Docket No. 3828), to administer and make recommendations for the allocation and distribution of the Attorney Fee Fund and its sub funds as provided in the Fee Agreement.

M. "*Later Litigating State.*" A State that first files a lawsuit bringing a Released Claim against a Released Entity after the Preliminary Agreement Date.

N. "*MDL Court*." United States District Court for the Northern District of Ohio Eastern Division, Case No. 1:17-md-02804, Judge Dan Aaron Polster.

O. "*MDL Direct Cost Fund*." The cost fund described in subparagraph II.A.3.a below.

P. "*MDL Participating Counsel.*" MDL Participating Counsel includes an attorney or firm authorized by MDL 2804 Lead Counsel to perform work for the Common Benefit of Participating Subdivisions. By way of example, it would include insurance counsel and appellant counsel.

Q. "*MDL PEC*." The Plaintiffs' Executive Committee appointed by the MDL Court.

R. "*Non-Participating Litigating Subdivision*." A Litigating Subdivision that is not a Participating Subdivision.

S. "*Non-Participating State.*" A State that is not a Participating State.

T. "*Participating Litigating Subdivision*." A Litigating Subdivision that is also a Participating Subdivision.

U. "*Participation Agreement*." An agreement executed by an Attorney that acknowledges the obligation to pay an appropriate MDL Common Benefit Assessment.

V. "*Qualified Tribal Representation.*" Representation by an attorney of a Participating Tribal Government regarding Released Claims against Released Entities. Such counsel are eligible for Common Benefit Fee consideration. The Teva Tribal Global Settlement and the Allergan Tribal Global Settlement will provide for the contribution to the Common Benefit Fund as determined by the MDL Court.

W. "*Qualifying Representation.*" Legal services provided for representation of the MDL PEC or Participating Litigating Subdivision regarding Released Claims against Released Entities.

X. "*State Back-Stop Agreement*." Any agreement by a Settling State and private counsel for Participating Subdivisions in that State (or legislation enacted in that State) to provide, adjust, or guarantee attorneys' fees and costs, whether from the Attorney Fee Fund or any other source recognized in the agreement or legislation.[1]

Y. *"Subdivision Cost and Expense Fund."* The fund created to pay approved Subdivision and Tribal Nations costs and expenses as set forth in subparagraph II.A.3.b.

Z. *"Teva"* means (i) Teva Pharmaceutical Industries Ltd. and (ii) all of its respective past and present direct or indirect parents, subsidiaries, divisions, affiliates, joint ventures, predecessors, successors, assigns, including but not limited to Teva Pharmaceuticals USA, Inc., the Actavis Generic Entities, and Anda Inc.

II. MDL Direct Cost Fund and Subdivision Cost and Expense Fund ("*Cost Fund*")

A. The total Cost Fund shall be $30 million dollars funded as set forth below.

1. Total cost to be paid by Teva in each of the relevant Payment Years[2] under this Agreement shall be up to the following amounts, subject to the provisions set forth below:

	Cost Fund

[1] Nothing herein shall be understood to indicate approval for additional State Back-Stop Agreements or modifications of existing State Back-Stop Agreements.

[2] Payment Year shall have the same meaning for Teva as set forth in the Teva Agreement and Teva Exhibits M-1 and M-3. Payment Year shall carry the same definition for Allergan as set forth in the Allergan Agreement and Allergan Exhibits M-1 and M-2.

Payment Year 1	$9,000,000.00
Payment Year 2	$9,000,000.00

2. Total cost to be paid by Allergan in each of the relevant Payment Years under this Agreement shall be up to the following amounts, subject to the provisions set forth below:

	Cost Fund
Payment Year 1	$6,000,000.00
Payment Year 2	$6,000,000.00

3. The Cost Fund shall be split into the MDL Direct Cost Fund and the Subdivision Cost and Expense Fund.

   a. The MDL Direct Cost Fund shall be Seven Million Five Hundred Thousand Dollars ($7,500,000), payable 50% in Year One, and 50% in Year Two. The MDL Direct Cost Fund shall make payment without any delay to reimburse the MDL PEC for an agreed-to portion of the expenses incurred, provided the costs have been approved by the Cost and Expense Fund Administrator appointed by the Court. The MDL Direct Cost Fund will be paid directly to the MDL Opiate Capital Account. The Cost and Expense Fund Administrator may include costs incurred by the MDL PEC in furtherance of litigation, mediation, implementation, and management of the Settlements.

   b. The Subdivision Cost and Expense Fund shall be Twenty-Two Million Five Hundred Thousand Dollars ($22,500,000), payable 50% in Year One and 50% in Year Two.

   c. It is the intention of the Parties that the Cost Fund shall be administered by the Cost Fund and Expense Fund Administrator (MDL Docket No. 3828), who will be governed by the provisions of this Agreement and shall design the process and procedures for the allocation of costs pursuant to this Agreement and the MDL Court's Order.

   d. The costs of the Cost and Expense Fund Administrator shall be paid from the Cost Fund and allocated by the Cost and Expense Fund Administrator between the MDL Direct Cost Fund and the

Subdivision Cost and Expense Fund to fairly charge each fund the cost incurred in implementing and supervising the specific fund.

e. The Cost and Expense Fund Administrator shall set the process and procedures for submission of and criteria for applications for payment of Subdivisions' and Tribal Nations' costs and expenses. The Cost and Expense Fund Administrator shall receive and evaluate applications from Participating Litigating Subdivisions and litigating Tribal Nations, whether filed in Federal Court or State Court, to seek reimbursement for eligible costs in pursuit of claims against Allergan or Teva. The process shall require a showing that the costs or expenses sought were reasonably incurred in furtherance of active litigation of a designated state or federal bellwether trial-set case, or Common Benefit. The Cost and Expense Fund Administrator shall require transparency from all applicants as to any other sources for compensating Attorneys for Subdivisions and Tribal Nations for costs incurred. If funds remain after the reimbursement of approved out-of-pocket costs, the Cost and Expense Fund Administrator may consider reasonable and appropriate payment for client time, costs, or expenses incurred by recognized trial bellwether plaintiffs. At the conclusion of the process, any funds not allocated by the Cost and Expense Fund Administrator shall be transferred to the Common Benefit Fund established in this **Exhibit R**.

4. In the event that States and Subdivisions enter into an additional global settlement with a party or parties other than Teva or Allergan that is (a) under the jurisdiction of the MDL Court in MDL No. 2804, (b) creates a separate cost fund, and (c) unless the parties agree to another date, such agreement has an effective date prior to June 30, 2023, the Cost and Expense Fund Administrator shall have the authority to aggregate the Cost Fund with the cost fund created under that global settlement agreement. The Cost and Expense Fund Administrator shall have the authority to address the appropriate procedures and required information to allow the costs to be funded from the appropriate cost fund or shared by two or more cost funds.

III. Attorney Fee Fund

A. An Attorney Fee Fund shall be paid in the following amounts and years:

	Teva Shall Pay	Allergan Shall Pay
Payment Year 1	$ 46,215,837.93	$ 40,778,855.53
Payment Year 2	$ 46,215,837.93	$ 40,778,855.53
Payment Year 3	$ 55,215,837.92	$ 46,778,855.53

Payment Year 4	$ 55,215,837.92	$ 46,778,855.53
Payment Year 5	$ 55,215,837.92	$ 0.00
Payment Year 6	$ 55,215,837.92	$ 0.00

B. The Attorney Fee Fund shall consist of the Contingency Fee Fund and the Common Benefit Fund.

2. It is the intention of the Parties that the Contingency Fee Fund and the Common Benefit Fund shall be administered by the Fee Panel (MDL Docket No. 3828), which will be governed by the provisions of this Fee Agreement and shall design the process and procedures for the allocation of fees pursuant to this Fee Agreement and the MDL Court's Order.

C. The fees to be paid under this Fee Agreement are available for Attorneys engaged in Qualifying Representations and Qualified Tribal Representations only. Fees to be paid under this Fee Agreement are not available prior to the Effective Date of the Teva Agreement and Allergan Agreement or if the Teva Agreement does not proceed past Teva's determination in **subsection XI.A** of the Teva Agreement or if the Allergan Agreement does not proceed past Allergan's determination in **subsection X.A** of the Allergan Agreement. Fees to be paid under this Fee Agreement are not available for representation of States, Non-Participating Subdivisions or Non-Litigating Subdivisions and are not available for representation of private hospitals, third-party payors, NAS claimants, personal injury/wrongful death claimants, or any entity other than Participating Litigating Subdivisions. In addition, fees under this Fee Agreement are not available for representation of any individual or entity in matters other than those claims against Released Entities, but may include a reasonable share of representations that involve development of facts for pursuit of opioid-related claims against multiple defendants in the pharmacy, manufacturing, and distribution chain.

D. *Attorney Fee Fund and Sub Funds.*

1. There shall be a split of the Attorney Fee Fund into the Contingency Fee Fund and the Common Benefit Fund. The split shall be 40% to the Contingency Fee Fund and 60% to the Common Benefit Fund.

2. In no event shall Teva or Allergan be required to pay more into the Attorney Fee Fund in any Payment Year than the maximum amount specified for that Payment Year in subsection III.A., which amounts are reflected in **Exhibit M** to the Teva Agreement and Allergan Agreement. The amounts allocated to the Contingency Fee Fund and the Common Benefit Fund set by the Fee Panel shall be subject to the reductions and offsets set forth below.

3. Awards of fees from the Contingency Fee Fund shall be available to Attorneys with Qualifying Representations of Participating Litigating Subdivisions eligible to receive an allocation under the Teva Agreement and Allergan Agreement, as set forth in **Exhibits F-2** and **G** to the Teva Agreement and **Exhibits F** and **G** to the Allergan Agreement, and shall be made applying the Mathematical Model attached as Exhibit "A" to this Fee Agreement. The collection of the data and calculations for the Mathematical Model has been a cooperative effort among private counsel for a large number of Litigating Subdivisions. The analysis has been spearheaded by Joseph Tann and Andrew Arnold. The Fee Panel is encouraged to continue working with those counsel in application of the Model. The Fee Panel shall oversee the application of the Model and resolve any questions or disputes concerning the eligibility of a Counsel to participate as required in subsection III.G. The Panel is empowered to hear disputes concerning and ensure the accuracy of the mathematical calculation.

4. As to awards from the Contingency Fee Fund, there shall be no right of appeal.

5. Any appeal of an award of the Fee Panel from the Common Benefit Fund will be made to the MDL Court and be reviewed under an abuse of discretion standard.

E. *Common Benefit Fund (60% of the Attorney Fee Fund).*

1. Funds in the Attorney Fee Fund shall be allocated to the Common Benefit Fund according to the schedule set forth below, subject to the adjustments described in paragraph III.E.6. The payments are to be made on the following yearly schedule, subject to the adjustments set forth below:

	Teva Shall Pay	Allergan Shall Pay
Payment Year 1	$ 27,729,502.76	$ 24,467,313.32
Payment Year 2	$ 27,729,502.76	$ 24,467,313.32
Payment Year 3	$ 33,129,502.75	$ 28,067,313.32
Payment Year 4	$ 33,129,502.75	$ 28,067,313.32
Payment Year 5	$ 33,129,502.75	$ 0.00
Payment Year 6	$ 33,129,502.75	$ 0.00

2. The Common Benefit Fund shall be available to compensate Attorneys engaged in Qualifying Representations of Participating Litigating

Subdivisions and Qualified Tribal Representation of Tribal Participating Governments who:

a. have performed work for the Common Benefit of all Participating Subdivisions and/or Tribal Nations consistent with the provisions to the guidelines established by Judge Polster set forth in MDL 2804 and the May 1, 2018 Order, under docket number 358, which is incorporated herein by reference; and

b. satisfy the eligibility criteria set forth in subsection III.G.

3. For purposes of Common Benefit Fund distribution, Attorneys representing Tribal Nations litigating against Teva or Allergan have also reached a settlement for Released Claims with Teva and Allergan. These settlements shall be the subject of separate agreements with Teva and Allergan. Attorneys representing Tribal Nations are eligible for Common Benefit consideration, provided such agreements with Teva and Allergan become effective under their terms. Such Attorneys must meet the eligibility criteria in subsection III.G.

4. For purposes of Common Benefit Fund distribution, MDL Participating Counsel not engaged in Qualifying Representations of Participating Litigating Subdivisions but who performed work for the Common Benefit pursuant to authorization from the MDL Co-Leads and meet the eligibility criteria in subsection III.G shall be eligible.

5. The Common Benefit Fund shall be overseen by the Fee Panel, which shall determine the allocation of funds to eligible Attorneys consistent with this Fee Agreement and the May 1, 2018 Order.

6. In assessing the benefits that an Applicant has conferred to Participating Subdivisions (including non-Litigating Subdivisions) and/or Tribes for purposes of any compensation decision, the Fee Panel shall give significant weight to the extent to which (i) the Applicant and his or her clients have contributed to increasing (or reducing) the Initial Participation in the Teva Agreement or the Allergan Agreement, and (ii) the Applicant and his or her clients have contributed to increasing (or reducing) the amounts achieved under Incentive Payments A-D through participation in the Teva Agreement, including the Teva Tribal Agreement, or the Allergan Agreement, including the Allergan Tribal Agreement. The Fee Panel shall also consider additional fee recoveries the Applicant may potentially obtain, including, but not limited to, from attorney fee funds under other settlement agreements, State Back-Stop Agreements, representations of States or Tribal Nations, representations of other clients in opioids-related matters, or through the representation of Subdivision clients, whether they participated in the Teva Agreement or Allergan Agreement or not. It is the intent of this provision to recognize that the goal of the Teva Agreement

and Allergan Agreement is to provide for maximum participation by the Subdivisions, maximum abatement funding for all Subdivisions nationally, and the maximum peace for Released Entities. Therefore, representing one or more Non-Participating States or Non-Participating Subdivisions does not further the goal of the Teva Agreement or Allergan Agreement, and should not be considered Common Benefit because it does not increase funds available to Participating Subdivisions' abatement programs. Representing one or more Later Litigating States or Later Litigating Subdivisions is antithetical to the Teva Settlement and the Allergan Agreement and detracts from Common Benefit. The Fee Panel shall consider this concept of "common detriment" set forth in this paragraph in all of its decision making with respect to the allocation of the Attorney Fee Fund among Applicants, as well as, in its discretion, any offsets provided to Teva or Allergan as set forth in subsection III.H. The Fee Panel shall consider the totality of the Applicant's Participating Litigating Subdivisions as compared to the Applicant's Non-Participating Litigating Subdivisions; the Parties recognize that, although the goal is for 100% participation, Applicants with a greater number of clients have a greater probability of having one or more Non-Participating Litigating Subdivisions. As used in this paragraph, "client" or "representing" a Subdivision shall include any Litigating Subdivision as to which the Applicant has a Fee Entitlement.

7. As set forth in subsection III.H, the Fee Panel must consider the factors described in paragraph III.E.6 to determine how and whether to reduce the amounts to be paid by Teva or Allergan under this Fee Agreement and to determine how to allocate funds among Applicants. They may also, at their discretion, consider other factors. Any reduction in payment obligation or credit to be given Teva or Allergan in this Fee Agreement shall be applied against the last Payment Year for that defendant and working backwards. Any reduction to an Applicant not credited to Teva or Allergan shall be allocated to attorneys whose Litigating Subdivision clients participated in the settlement by the Initial Participation Date.

8. The MDL PEC will seek, and the Attorneys General for Settling States, Teva, and Allergan, will not oppose, a Common Benefit Fee Order requiring an assessment of 7.5% on the gross recovery (by judgment or settlement) of any Non-Participating Subdivision that is subject to the federal court jurisdiction, represented by a MDL PEC firm, represented by any Attorney receiving fees from the Common Benefit Fund, represented by any Attorney that signed a Participation Agreement or paid in a case otherwise under the jurisdiction of the MDL Court.

9. If Teva and Allergan agree to go forward with their respective Agreements under subsections [XI.A and X.A] of their respective Agreements, they shall pay the full Common Benefit (60%) Fee into the Common Benefit Fund without regard to the number of Settling States or Participating Subdivisions. Should Teva and/or Allergan pay a judgment to, or settle

with, a Non-Participating State or a Non-Participating Litigating Subdivision subsequent to the Reference Date, and such settlement or judgment results in a common benefit fee assessment paid into the Common Benefit Fund or the Court Common Benefit Fund, the following shall apply:

a. Teva or Allergan shall be credited dollar-for-dollar for the amount paid for the fee assessment up to 7.5% of the abatement amount derived from the application of the State Global Allocation Percentage as set forth in **Exhibit F-1** or the abatement amount derived from the application of the Subdivision and Special District Allocation Percentage as set forth in **Exhibit G** that the Non-Participating State or Non-Participating Litigating Subdivision would have received if it had participated in the Settlement Agreement;

b. Except as set forth below in subparagraph III.E.9.c, for any settlement or judgment that meets the requirements of paragraph III.E.9 that exceeds the abatement amount derived from the application of the State Global Allocation Percentage as set forth in **Exhibit F-1** or the abatement amount derived from the application of the Subdivision and Special District Allocation Percentage as set forth in **Exhibit G**, no credits shall be taken against Teva or Allergan's obligation to make payments into the Common Benefit Fund for that portion of the settlement or judgment in excess of the abatement amount derived from the application of the State Global Allocation Percentage as set forth in **Exhibit F-1** or the abatement amount derived from the application of the Subdivision and Special District Allocation Percentage as set forth in **Exhibit G**;

c. For any settlement or judgment that meets the requirements of paragraph III.E.9 that exceeds the abatement amount derived from the application of the State Global Allocation Percentage as set forth in **Exhibit F-1** or the abatement amount derived from the application of the Subdivision and Special District Allocation Percentage as set forth in **Exhibit G** that the Later Litigating State or Later Litigating Subdivision would have received if it had participated in the Settlement Agreement, where the Later Litigating State or Later Litigating Subdivision is represented by any member of the MDL PEC or that member's law firm, Teva or Allergan shall be credited dollar-for-dollar for the full amount of the 7.5% common benefit fee assessment paid into the Common Benefit Fund or the Court Common Benefit Fund;

d. If a credit is made to Allergan or Teva pursuant to subparagraph III.E.9.c., then that amount shall be calculated as a direct reduction to any common benefit fee award made under this Fee Agreement

to the MDL PEC firm(s) that represented the Later Litigating State or Later Litigating Subdivision;

e. Any credits shall be taken first against Teva's or Allergan's payment to the Common Benefit Fund in Teva's or Allergan's respective final Payment Year as set forth in paragraph III.E.1 (for Teva Year 6; for Allergan Year 4), up to the full amount of Teva's or Allergan's final year payment obligation, then from the next-to-final Payment Year's payment obligation, and so on;

f. Teva and Allergan shall not be entitled to any credits against the Common Benefit Fund for settlements or judgments paid after Teva's or Allergan's final fee Payment Year.

F. *Contingency Fee Fund (40% of the Attorney Fee Fund).*

1. Funds from the Attorney Fee Fund shall be allocated to the Contingency Fee Fund on the following yearly schedule, subject to the adjustments set forth below:

	Teva Shall Pay	Allergan Shall Pay
Payment Year 1	$ 18,486,335.17	$ 16,311,542.21
Payment Year 2	$ 18,486,335.17	$ 16,311,542.21
Payment Year 3	$ 22,086,335.17	$ 18,711,542.21
Payment Year 4	$ 22,086,335.17	$ 18,711,542.21
Payment Year 5	$ 22,086,335.17	$ 0.00
Payment Year 6	$ 22,086,335.17	$ 0.00

2. The Contingency Fee Fund shall be available to compensate Attorneys engaged in Qualifying Representations of Participating Litigating Subdivisions that meet the criteria set forth in subsection III.G.

a. The Contingency Fee Fund shall be available to Attorneys who represent Litigating Subdivisions that are Participating Subdivisions, whether their actions are filed in state or federal court, and meet the eligibility criteria of subsection III.G.

b. Participation in the Contingency Fee Fund by counsel that have a case that is not subject to the jurisdiction of the MDL Court shall not create, provide, or waive jurisdiction of the MDL Court over that Litigating Subdivision, that case or Attorneys, other than to oversee

the fairness of the distribution process, and enforcement of this Fee Agreement.

c. Under the terms of the Teva Agreement and Allergan Agreement Litigating Subdivisions must become a Participating Litigating Subdivision under both Agreements to be eligible to participate. Therefore, **Exhibit R** applies jointly to Teva and Allergan with the Attorneys' Fee Fund and MDL Cost Fund to include the combined payment from Teva and Allergan.

3. Teva and/or Allergan shall each be entitled to a pro-rata reduction to their own portion of the Contingency Fee Fund payment(s) in accordance with subsection III.F.4., unless, by the Payment Date for the Initial Year Payment, (i) 41 states are Settling States for Teva or 43 states are Settling States for Allergan, (ii) 98% of all Litigating Subdivisions are Participating Subdivisions and/or Subdivisions Subject to a Bar, Case-Specific Resolution, and, (iii) 97% of all Non-Litigating Subdivisions with Populations over 10,000 as listed in **Exhibit I** are Participating Subdivisions and/or Subdivisions Subject to a Bar, Case-Specific Resolution, in which case no offset shall be applied.

4. If the participation conditions in paragraph III.F.3 are not met, then the amounts owed by Teva and/or Allergan to the Contingency Fee Fund shall be reduced as follows:

a. For Non-Settling States, the Contingency Fee Fund payments shall first be reduced by the amounts identified by the Fee Panel, pursuant to paragraph III.H.7, that would have been owed to counsel for Litigating Subdivisions in Non-Settling States, had those States and those Litigating Subdivisions been Settling States and Participating Subdivisions.

b. Following the calculation in subparagraph III.F.4.a., the Contingency Fee Fund payments shall be reduced to reflect the non-joinder of Litigating Subdivisions in Settling States by subtracting the amounts identified by the Fee Panel, pursuant to paragraph III.H.7, that would have been owed to counsel for Non-Participating Litigating Subdivisions in Settling States had such Litigating Subdivisions been Participating Subdivisions.

5. In the event that after the date of the Settlement Agreement Teva, prior to the Effective Date of the Teva Agreement, or Allergan, prior to the Effective Date of the Allergan Agreement, settles with any Litigating Subdivision that would have been eligible to participate in the defendant's Agreement, and, under such settlement agreement pays attorneys' fees, the Fee Panel shall treat those Litigating Subdivisions as Participating Litigating Subdivisions and, applying the same criteria applicable to all Attorneys for Participating

Litigating Subdivisions, determine what amount they would have been paid from the Contingency Fee Fund if they had become Participating Subdivisions under the Teva Agreement or the Allergan Agreement without such prior settlement. That sum, rather than being paid to the Attorney for the previously settling Litigating Subdivision, shall be credited and/or returned to Teva or Allergan as if determined under (a)(ii) above, except that such credit shall not be greater than the amount paid to the Attorneys under the Litigating Subdivision's prior settlement agreement and credits apply equally over the Fee Payment Years.

6. During the period between the Preliminary Agreement Date and the Effective Date, the MDL PEC, as well as Litigating Subdivisions' Attorneys, shall make best efforts to cease litigation activity against Teva and Allergan, including by jointly seeking stays or severance of claims against Teva and Allergan, where feasible, or postponements if a motion to stay or sever is not feasible or is denied, so long as such actions are not otherwise detrimental to the Litigating Subdivision.

G. *Eligibility.*

1. It is the intention of all parties participating in the Fee Panel process that there should be total transparency to the Fee Panel and to all fund participants. In connection with the process to be developed by the Fee Panel, any and all monies in attorney's fees received or awarded, including prior or future Contingency Fees, Common Benefit Fees, referral fees, expenses paid, promises for payment, or any other Fee Entitlement, to any Applicant in any opioid litigation shall be disclosed to the Fee Panel as a condition of participating in the Attorney Fee Fund and prior to an award from the Fee Panel. Any payment, expectation of payment or perceived entitlement to participate in a State Back-Stop Agreement or any other agreement reached with a Settling State or any Subdivision or any other source regarding payment of fees must be disclosed to the Fee Panel. Similarly, any right to payment from any other fund, for example a fund for payment to lawyers representing Settling States or Tribal Nations or Subdivisions shall be disclosed to the Fee Panel. Because it is anticipated that there will be multiple firms listed on contingent fee agreements with Litigating Subdivisions, the Fee Panel shall establish procedures, with input from Attorneys for Participating Litigating Subdivisions, for who should petition for fees from such groups and to whom the fee shall be paid and thereafter distributed to co-counsel in accordance with applicable agreements. For the avoidance of doubt, all Attorneys that are part of such groups must meet the eligibility criteria in paragraph III.G.3, must be subject to the criteria set forth in subsection III.C, and must be disclosed to the Fee Panel.

2. An Applicant may apply for and recover attorneys' fees from the Common Benefit Fund, the Contingency Fee Fund, and any fund created by a past or

future State Back-Stop Agreement, provided the Applicant satisfies the requirements relevant to each such fund and requirements for disclosure to the Fee Panel.

3. An Attorney may not receive any payment from the Attorney Fee Fund (which includes both the Contingency Fee Fund and the Common Benefit Fund) unless the following eligibility criteria are met and annually certified by the Attorney:

   a. The Attorney must expressly waive the enforcement against the Litigating Subdivision client of all Fee Entitlements (other than under State Back-Stop Agreements) arising out of or related to any or all Qualifying Representations of any Participating Litigating Subdivision prior to applying for attorneys' fees from the Attorney Fee Fund. All applications for attorneys' fees under this Fee Agreement shall include an affirmation by the Attorney of such waiver and notice to the client(s) of such waiver. Such waiver shall not preclude the Attorney from submitting such Fee Entitlements to the Fee Panel as a factor for consideration in allocating payments from the Attorney Fee Fund or in connection with a State Back-Stop Agreement. For the avoidance of doubt, no Attorney may recover fees under this Fee Agreement unless the Attorney expressly agrees not to enforce Fee Entitlements as to each and every Participating Litigating Subdivision represented by that Attorney, but such Attorneys may participate in and receive funds from a State Back-Stop Agreement.

   b. The Attorney must represent that s/he has no present intent to represent or participate in the representation of any Later Litigating Subdivision or Later Litigating State with respect to Released Claims against Released Entities.

   c. The Attorney must represent that s/he has not and will not engage in any advertising or solicitation related to Released Claims against Released Entities where such advertising or solicitation relates to a representation of a Subdivision eligible to be a Participating Subdivision after the Reference Date unless the Attorney is recommending participation in the Agreement.

   d. The Attorney must represent s/he will not charge or accept any referral fees for any Released Claims brought against Released Entities by Later Litigating Subdivisions or Later Litigating States. This representation shall not prohibit Attorneys from receiving allocated shares of any future common benefit assessments arising out of settlements or judgments with Later Litigating Subdivisions or Later Litigating States that are the result of the MDL Court's Common Benefit order.

e. The Attorney may not have and must represent that s/he does not have a Fee Entitlement related to a Later Litigating Subdivision or Later Litigating State, other than a potential Common Benefit Fee.

f. The Attorney must fully disclose the participation, or the anticipation of participation, in any agreement with a Settling State or Participating Subdivision concerning fees arising out of or related to the Teva Agreement or Allergan Agreement, including any fees paid or anticipated to be paid or any State Back-Stop Agreement.

g. The Attorney must identify for the Fee Panel whether s/he utilized state litigation work product or MDL work product, including but not limited to ARCOS data, document repositories, experts developed in the MDL, trial transcripts, or deposition transcripts. The Attorney must identify whether s/he signed the MDL Participation Agreement.

h. Any Attorney who applies for fees from one or both Funds must represent that, having exercised his/her independent judgment, s/he believes the Teva Agreement and the Allergan Agreement to be fair and will make or has made best efforts to recommend both Agreements to his or her Subdivision clients in Settling States. For avoidance of doubt, each Attorney is expected to exercise his or her independent judgment in the best interest of each client individually before determining whether to recommend joining the settlement. All applications for attorneys' fees or costs under this subsection shall include an affirmation by the Attorney in compliance with the foregoing subparagraphs.

4. No Attorney receiving fees under this Fee Agreement may apply for or recover from the Attorney Fee Fund fees arising from representing a Non-Participating Subdivision except Common Benefit Fees as described in paragraph III.E.2. All applications for attorneys' fees under this subsection shall include an affirmation by the Attorney of compliance with this paragraph.

5. An Attorney who has filed an application under this subsection and received an award of attorneys' fees shall provide a certification of compliance with the requirements of this Fee Agreement annually during the years upon which they are still entitled to receive attorneys' fee payments under this Agreement. This certification will be done as directed by the Panel.

6. If, at any time, the Attorney is unable to make the representations set forth in this subsection, such representations become untrue, or the Attorney falsely represents compliance with the eligibility criteria, the Attorney shall cease to be eligible to receive funds from the Attorney Fee Fund until further

review by the Fee Panel of the Attorney's eligibility under and compliance with this subsection.

7. If an Attorney has a Fee Entitlement with a Later Litigating Subdivision or Later Litigating State or otherwise becomes unable to reaffirm compliance with the eligibility criteria set forth above, the Attorney shall notify the Fee Panel. For the avoidance of doubt, any Attorney who undertakes any new representation of, or has a Fee Entitlement with, a Later Litigating Subdivision or Later Litigating State shall be prohibited from receiving any future funds from the Attorney Fee Fund. If an Attorney fails to notify the Fee Panel of such Fee Entitlement with a Later Litigating Subdivision or Later Litigating State, the Attorney shall be required to refund amounts previously paid. The Fee Panel shall notify Teva and Allergan when it receives notification.

8. To the extent an Attorney who has received compensation from the Attorney Fee Fund based on Qualifying Representations of Participating Litigating Subdivisions under the Teva Agreement or the Allergan Agreement, represents a Later Litigating Subdivision or Later Litigating State, such Attorney shall be obligated to refund such amounts received as compensation from the Attorney Fee Fund to Teva or Allergan. Teva, Allergan, or such Attorney may bring any dispute as to whether such Attorney shall be obligated to refund such amounts received from the Attorney Fee Fund to Allergan or Teva to the Fee Panel. Nothing herein shall require a multi-attorney law firm that has received compensation from the Attorney Fee Fund to refund such amounts if an attorney of the firm that is no longer affiliated with such law firm, after such departure, represents a Later Litigating Subdivision or Later Litigating State, provided that (a) neither the law firm nor any of its other attorneys have any contractual or financial arrangement regarding, stand to benefit directly or indirectly from, or directly or indirectly provide financial or other support of any kind to, the former attorney's representation of the Later Litigating Subdivision or Later Litigating State and (b) if the former attorney was a partner or owner of the multi-attorney law firm at the time that the law firm received compensation from the Attorney Fee Fund, the former attorney shall be obligated to refund such amounts as the former attorney earned as a result of the compensation that the law firm received from the Attorney Fee Fund.

9. In the event that an Attorney is deemed ineligible by the Fee Panel (whether based on its initial application or subsequent recertification), the Fee Panel shall provide notice to the Attorney and give the Attorney 30 days to provide additional information such that the Fee Panel could re-consider the Attorney's eligibility.

10. To the extent that an Attorney has a Fee Entitlement with a Participating Subdivision and is authorized to bring Released Claims against Released Entities, but such authorization is, in scope, less broad than the category of

Released Claims set forth in the Teva Agreement or Allergan Agreement, such Attorney may participate fully in both the Contingency Fee Fund and the Common Benefit Fund, without any reduction imposed by the Fee Panel due to the scope of the authorization, so long as the Participating Subdivision fully releases all Released Claims against Released Entities.

11. Attorneys applying to the Attorney Fee Fund knowingly and expressly agree to be bound by the decisions of the Fee Panel, subject to the limited appeal rights set forth in this Fee Agreement, and waive the ability to assert the lack of enforceability of the allocation reached through the procedures outlined herein.

12. Applicants are under an ongoing obligation to inform the Fee Panel in writing of any additional fees earned, expected, or received related to any Opioid litigation throughout the period of the Fee Panel's operation.

H. *Calculation of Amounts Due.*

1. The Fee Panel shall be solely responsible for determining the amount of fees to be paid to each Applicant. None of the Released Entities shall have any responsibility, obligation, or liability of any kind whatsoever with respect to how attorneys' fees are calculated under this subsection, except that the Fee Panel may receive information from Teva or Allergan as to (a) the identity of Participating, Non-Participating, Litigating, Later Litigating, and Non-Litigating Subdivisions; (b) the impact of non-participation by a Litigating Subdivision as is relevant to the Fee Panel's determination in paragraph III.E.6; and (c) such other information as Teva or Allergan may voluntarily elect to provide.

2. The Fee Panel shall establish procedures for making determinations under this Fee Agreement consistent with this Fee Agreement and orders of the MDL Court. Such procedures may include submission of documentary and/or other evidence, interviews with Applicants and/or other counsel (including counsel for Teva and Allergan) that the Fee Panel deems appropriate, and/or other means of creating a record upon which fee awards will be based.

3. In making determinations under this Fee Agreement, the Fee Panel must apply the eligibility criteria set forth in subsection III.G of this Fee Agreement and the criteria set forth in paragraph III.E.2. In addition, the Fee Panel will give consideration in regard to Common Benefit Fund awards to the *Johnson* factors, as well as the following factors (which factors may be applied and given relative weight in the Fee Panel's discretion):

   a. The Applicant's contemporaneously recorded time and labor dedicated to Qualifying Representations along with the Applicant's

financial commitment to such Qualifying Representations. Claimed "time" will not be automatically accepted by the Fee Panel but will be critically reviewed and given substantially more weight and consideration if such time was subject to the audit process described in any Pretrial Order(s) governing the collection of common benefit time;

b. The novelty, time, and complexity of the Qualifying Representations;

c. The skill requisite to perform legal services properly and undesirability of the case;

d. The preclusion of other employment by the Applicant due to time dedicated to Qualifying Representations;

e. The Common Benefit, if any, alleged to have been conferred by the Applicant and whether such Common Benefit work product by that Applicant was used by others in parallel litigations against Released Entities whether within or outside the MDL, provided that any Applicant claiming that s/he substantially benefited cases other than those in which s/he entered an appearance as counsel must substantiate such claims by proffering factual support, such as proper supporting affidavits or other documents as determined by the Fee Panel with input from Attorneys for Participating Litigating Subdivisions;

f. Any "common detriment," as set forth in paragraph III.E.6.

g. Any contingent fee agreement or other Fee Entitlement with Participating Subdivisions, enforcement of which, except for State Back-Stop Agreements, are waived in conjunction with the application, the nature and extent of any work for those Participating Subdivisions, whether such Participating Subdivisions actively litigated and, if so, the nature and procedural history of such case(s);

h. The experience, reputation, and ability of the Applicant;

i. Whether the Applicant's clients brought Released Claims against Released Entities;

j. The status of discovery in cases primarily handled by the Applicant;

k. The nature of any work by the Applicant on "bellwether" cases or cases that were similarly active in litigation;

l. Any pressure points successfully asserted by the Applicant in cases against Teva or Allergan or any risk for Teva or Allergan created by the Applicant in cases against them;

m. Any risk for defendants created by Applicants in cases against Teva or Allergan;

n. Successful and unsuccessful motion practice in cases worked on by the Applicant;

o. The date of filing of any cases filed by the Applicant;

p. Obtaining consolidation of the litigation in the Applicant's jurisdiction;

q. The number and population of entities represented by the Applicant and the fees that would have been awarded under extinguished contingent fee arrangements;

r. Whether the Applicant's clients brought claims against Teva or Allergan;

s. Whether the Applicant has had a leadership role in the litigation, whether in state or federal court;

t. Whether the Applicant has had a leadership role in any negotiations aimed at resolving the litigation;

u. Whether the Applicant's cases have survived motions to dismiss;

v. The extent to which the Applicant contributed to the work product used for the common benefit of opioids litigants, including, without limitation, work on ARCOS data, Prescription Data Monitoring Programs, IQVIA data, depositions, document production and analysis experts, motions, briefs and pleadings, trial preparations, and trials;

w. The extent to which litigation was done prior to and contributed to completion of settlement negotiations, as distinct from litigation that was done litigating after the announcement of the Teva Agreement or Allergan Agreement, such latter litigation both being of less value and potentially resulting a common detriment to the settlement process; and

x. Any other factors that the Fee Panel finds to be appropriate to consider after input from Applicants to the Attorney Fee Fund.

4. In the event that States and Subdivisions enter into an additional global settlement with a party or parties other than Teva or Allergan that is (a) under the jurisdiction of the MDL Court in MDL No. 2804, (b) creates a separate common benefit fund to be administered by the Fee Panel, and (c) unless the parties agree to another date, such agreement has an effective date prior to June 30, 2023, the Fee Panel may:

    a. Consolidate the Common Benefit approval process to include evaluation of all Common Benefit Applications for all settlements entered after November 14, 2022;

    b. Determine the fair and equitable allocation of the Aggregate Common Benefit Fees that come after November 14, 2022;

    c. Give consideration to the amount and timing of each settlement, including the amount and timing of Common Benefit Fees;

    d. The Fee Panel shall abide by the applicable Attorney Fee Agreement in each of the Settlements in Allocating the Common Benefit Fees provided for in the Settlement; and

    e. Be guided in their work by the Orders of the Court related to Fees and Costs.

5. The Fee Panel shall develop procedures for receiving a single application, which may be updated or amended based on new information (such as participation by additional Litigating Subdivisions) from each Applicant seeking compensation from each sub fund of the Attorney Fee Fund pursuant to processes and procedures developed by the Fee Panel, which shall not be inconsistent with this Fee Agreement. Any request for attorneys' fees not included on the single application or through the updating/amendment process designed by the Fee Panel shall be deemed waived. For purposes of transparency and to permit the Fee Panel to conduct its work, the application from each Applicant shall, at a minimum, require each Applicant to:

    a. Identify all Litigating Subdivisions for which s/he is seeking payment from the Attorney Fee Fund;

    b. Identify all Subdivisions in both Settling and Non-Settling States (and, where applicable, Tribal Nations) with respect to which s/he has a Fee Entitlement with respect to Relevant Claims against Released Entities, and identify all co-counsel in such cases;

    c. Identify which of those Subdivisions are Participating Subdivisions and which are not (with similar information for Tribal Nations, where applicable);

d. Specify the specific fund or funds within the Attorney Fee Fund from which the Attorney is seeking compensation;

e. Demonstrate his or her eligibility for compensation from the relevant sub funds within the Attorney Fee Fund pursuant to the criteria set forth for the relevant sub fund;

f. Identify any and all Fee Entitlements from representations of States, Tribal Nations, or other plaintiffs related to Released Claims against Released Entities or in opioids-related matters;

g. Notwithstanding "a-f" above, the Panel may consider a supplemental application if the Applicant shows good cause why circumstances exist that will lead to consideration for additional Common Benefit award. Examples would include, but are not limited to, an Applicant having Non-Participating Litigating Subdivision clients that subsequently become Participating Subdivisions, a Bar Date passes that increases participation or the Participation Tier, or an Allocation Agreement is reached.

6. With respect to the Common Benefit Fund, the Fee Panel shall (subject to any applicable MDL Court Order):

a. Review the applications of all Applicants seeking compensation from the Common Benefit Fund, including determining eligibility for each Applicant as set forth in subsection III.G.

b. Reduce, on an annual basis, Teva's or Allergan's payment obligations, as set forth in paragraph III.E.7. The Panel shall inform Teva or Allergan, and the MDL PEC of all such amounts and adjust payment obligations accordingly.

c. Using criteria set forth in subsections III.E and III.H, allocate amounts from the Common Benefit Fund to eligible Applicants, including payment amounts for each Payment Year. In making such allocations, the Panel shall apply the principles set forth in paragraph III.E.6 and shall allocate any reduction in the payments specified in paragraph III.E.7 to the amounts paid to Applicants with a Common Benefit Fee Entitlement.

7. With respect to the Contingency Fee Fund, the Fee Panel shall:

a. Review the applications of all Attorneys seeking compensation from the Litigating Subdivision Fee Fund, including determining eligibility for each Attorney as set forth in subsection III.G.

b. Apply the Mathematical Model in Exhibit A to this Fee Agreement.

c. Use such allocations to reduce on an annual basis the payment obligations of Teva or Allergan to the Attorney Fee Fund as set forth in paragraph III.F.4, and distributions therefrom, and inform Teva or Allergan and the MDL PEC of all such adjustments.

8. To the extent that there is a dispute about the calculations of the Fee Panel related to the amounts that Teva or Allergan is required to pay (including application of any reductions or offsets under this Fee Agreement), such disputes shall be presented to the Fee Panel and any disputed funds be paid into/held in escrow. The Fee Panel shall resolve such disputes expeditiously, with either Party having the right to seek review from the MDL Court.

9. For purposes of determination of fee or cost awards, allocations, reductions, and possible reversions under this Fee Agreement, unless specified otherwise a Subdivision will be considered a Non-Participating Subdivision if it is not a Participating Subdivision as of the deadline for the application for the fee at issue (or, if the determination does not involve a specific application, the date on which the record for such determination closes).

10. In the event that the Fee Panel, through the use of the Mathematical Model set forth in Exhibit A, allocates funds from the Contingency Fee Fund for an Attorney based on a Qualifying Representation of a Participating Litigating Subdivision and that Subdivision is in a Settling State in which the Consent Judgment has not been approved, such funds shall be placed into escrow until the Consent Judgment is approved, after which time they shall be released.

I. *Miscellaneous.*

1. The Fee Panel shall charge an hourly rate approved by the Court. The Pre-Effective Date costs associated with the Cost and Expense Fund Administrator shall be paid from funds in the Cost Fund. Post-Effective Date, the cost of the Fee Panel shall be charged against the applicable Fee Fund based on allocation by the Fee Panel and shall not be otherwise funded by Teva and Allergan.

2. The MDL PEC shall provide to Teva and Allergan information they have that identifies Attorneys who represent Litigating Subdivisions who are not Participating Subdivisions and who have an obligation to pay a common benefit assessment, either due to the MDL Court's orders or pursuant to a Participation Agreement.

3. Participating Subdivisions agree to instruct their counsel to treat information, work product and expert materials as confidential under Rule 1.6 of the ABA Model Rules of Professional Conduct. Accordingly, an Attorney shall not share information or work product with, or experts or

materials to, non-participants (other than the Attorney's own current clients or their lawyers, consultants, experts or other representatives or agents). However, nothing herein shall prevent MDL Leadership or PEC Counsel from fulfilling their obligations in any MDL and the MDL Court Order.

IV. Miscellaneous

A. *Termination*. If the Teva Agreement or Allergan Agreement does not proceed past the Reference Date, whether because Teva and Allergan do not determine to proceed or for any other reason, this Fee Agreement shall be null and void, neither Teva nor Allergan shall have any obligation to make any payments under this Fee Agreement other than Fee Panel costs advanced, and Teva, Allergan, and the PEC shall take such steps as are necessary to restore the *status quo ante*.

B. *MDL Court Consideration*. This Fee Agreement shall be attached as an exhibit to the Teva Agreement and Allergan Agreement. This Fee Agreement shall also be submitted by Teva, Allergan, and the MDL PEC to the MDL Court for approval pursuant to the motion and order that shall be attached, prior to the Preliminary Agreement Date of the Agreements, as Exhibit B.

1. In the event that the MDL Court, through an order, makes any change to the amounts potentially to be paid by Teva and Allergan under this Fee Agreement, makes any change to the Fee Panel's consideration of the factors set forth in paragraph III.E.6, or any other material change to the draft Order attached as part of Exhibit B or the terms of this Fee Agreement, Teva, Allergan, and the MDL PEC shall meet and confer concerning such changes.

2. If Teva, Allergan, and the MDL PEC are unable to reach agreement and revisions to this Fee Agreement, this Fee Agreement shall be null and void, Teva and Allergan shall have no obligation to make any payments under this Fee Agreement, and Teva, Allergan, and the MDL PEC shall take such steps as are necessary to restore the *status quo ante*.

C. *Amendment*. Once the MDL Court has entered an order implementing this Fee Agreement, this Fee Agreement can only be amended by (1) written agreement of Teva, Allergan, and the MDL PEC and (2) approval by the MDL Court.

D. *Jurisdiction and Enforcement*. The MDL Court shall have exclusive and ongoing jurisdiction over the enforcement and implementation of this Fee Agreement as set forth herein. The MDL PEC shall be the Authorized Party to enforce this Fee Agreement, as to the payment obligations of Teva and Allergan as set forth in this subsection and as to Attorneys making application to the Funds under this Fee Agreement. Solely for purposes of assessing or allocating common benefit fees, the MDL Court will continue to have jurisdiction over the work product developed in the MDL Court by and under the direction of the MDL PEC with respect to claims against Teva or Allergan, including data and documents, depositions, expert

reports, briefs and pleadings; and the MDL Court's protective orders, management orders, and other decisions regarding such discovery and other work product, including but not limited to, conditions on its use, will continue in full force and effect. Nothing in this subsection authorizes the MDL Court to act contrary to this Agreement or provides the MDL Court with jurisdiction over the Teva Agreement or Allergan Agreement.

Description of Mathematical Model for the Allocation of the Contingency Fee Funds

Allergan Settlement Agreement and Teva Settlement Agreement

This document describes the Mathematical Model for the allocation of the Contingency Fee Fund described in Exhibit R (Agreement of Attorney's Fees, Expenses and Costs) to the Allergan Settlement Agreement and Teva Settlement Agreement, respectively.[1] Awards of fees from the Contingency Fee Funds shall be available to Attorneys engaged in Qualifying Representations of Participating Litigating Subdivisions that meet the eligibility criteria.[2] A Fee Panel shall oversee the application of the Model and resolve any questions or disputes concerning the eligibility of a counsel to participate. The Panel is empowered to hear disputes concerning and ensure the accuracy of the mathematical calculations.

In general terms, allocation of the Contingency Fee Fund shall be made by (1) determining the amount of the Settlement Fund that is attributable to each Litigating Subdivision; (2) making certain adjustments to these amounts based on when the Subdivision filed suit and the terms of the applicable fee contract; and (3) dividing the Contingency Fee Fund proportionately among counsel for each Participating Litigating Subdivision based on the amounts calculated in subpart 2.

The total amount of the Contingency Fee Funds is $195,364,179.86, of which $70,046,168.84 is to be contributed by Allergan[3] and $125,318,011.02 is to be contributed by Teva.[4] Attorneys with Qualifying Representations of Participating Litigating Subdivisions that timely named one or more Released Entities of either Settlement Agreement and meet the other eligibility requirements shall receive the full amount due from the combined Contingency Fee Funds.[5]

Allocation of the Contingency Fee Funds shall be made according to the following steps. These calculations are made only to determine the percentage share of the Contingency Fee Funds that Attorneys for each Participating Litigating Subdivision would receive, ***not*** for determining the dollar amount each Subdivision would receive.

(1) For each Settling State, attribute 50% of the settlement funds for that State to its Subdivisions according to the Subdivision Allocation Percentage in Exhibit G to the Allergan Settlement Agreement or Teva Settlement Agreement.

`Illustrative example for the Allergan Settlement Agreement:`

[1] *See* Allergan Settlement Agreement, Exhibit R § III.D.3; Teva Settlement Agreement, Exhibit R § III.D.3.

[2] Allergan Settlement Agreement, Exhibit R § III.F.2; Teva Settlement Agreement, Exhibit R § III.F.2.

[3] Allergan Settlement Agreement, Exhibit R § III.F.1.

[4] Teva Settlement Agreement, Exhibit R § III.F.1.

[5] For example, Attorneys with Qualifying Representations whose suits named Teva, but did not name Allergan, shall be treated the same as Attorneys whose suits named Allergan but did not name Teva. Furthermore, Attorneys whose suits named both Allergan and Teva shall be treated the same as Attorneys who named only Teva or Allergan.

- The combined Net Abatement Amount is $4,984,715,862 ($1,799,186,751 for Allergan and $3,185,529,111 for Teva, including the cash value of the product). *See* Allergan Settlement Agreement, Exhibit M-1 and Teva Settlement Agreement, Exhibits M-1 and M-2.
- Assume that State A is allocated 1.00000% of the $1,799,186,751 Allergan Net Abatement Amount.
- 50% of the 1% share allocated to State A is $8,995,933.76.
- Assume that, per Exhibit G of the Agreement, the Subdivision Allocation Percentage for City B in State A is 1.00000000%.
- For purposes of determining its counsel's share of the Contingency Fee Fund, City B is attributed 1.00000000% of $8,995,933.76, or $89,959.34.
- These steps would need to be repeated for the Teva Settlement Agreement since the state allocation percentages are different in that agreement.

(2) Adjust the amounts in paragraph 1 as follows:

a. *Upward Adjustment for Early Filers.* Increase the amount calculated in paragraph 1 above by 10% for any Litigating Subdivision that named a Released Entity in a suit before December 5, 2017, the date the National Prescription Opiate Litigation MDL was formed. This adjustment must be done individually for each defendant. If the Litigating Subdivision did not name a Released Entity in a suit before December 2, 2022, then fees from the Contingency Fee Fund will not be awarded for otherwise Qualifying Representations of that Participating Litigating Subdivision.

Illustrative Example:

- Assume City C is attributed $1,000,000 under paragraph 1 above.
- If City C named the defendant(s) before 12/5/2017, the attributed amount would be adjusted to $1,100,000.

b. *Determine Amount Due under Contingency Fee Contract*. Determine the amount that would be due to Attorneys with Qualifying Representations of each Participating Litigating Subdivision under the terms of the applicable fee contract if the Participating Litigating Subdivision were to receive the amount calculated in paragraph 2.a. This amount can be referred to as the Contingency Fee Assumption.

Illustrative Example:

Continuing the example given in paragraph 2.a, if Attorneys have a 20% contingency fee contract with City C for the relevant litigation, the amount calculated in this step would be 20% of $1,100,000, or $220,000.

In the next step, the Contingency Fee Assumption is used to determine the percentage share of the Contingency Fee Fund due to Attorneys for each Participating Litigating Subdivision.

(3) Divide the Contingency Fee Fund proportionately among Attorneys for each Participating Litigating Subdivision in two ways:

a. *National Fee Pool Calculation.* Determine each Litigating Subdivision's percentage share of all amounts due under contingency fee contracts nationwide by dividing the Contingency Fee Assumption calculated for each Subdivision in paragraph 2.b by the sum of all Contingency Fee Assumptions. Then multiply that percentage by the total amount of the Contingency Fee Funds to figure each Subdivision's dollar share of the Contingency Fee Funds.

Illustrative example:

- $220,000 [from para. 2.b] ÷ $500,000,000 [total amount owed under contingency fee contracts nationwide] = 0.044%[6]
- 0.044% * $195,364,179.86 [Contingency Fee Funds] = $85,960.24

b. *Separate State Fee Pools Calculation.* Determine each Litigating Subdivision's percentage share of all amounts due under contingency fee contracts statewide by dividing the Contingency Fee Assumption calculated for each Subdivision in paragraph 2.b by the sum of all Contingency Fee Assumptions in the same State. Then multiply that percentage by the portion of the Contingency Fee Fund that corresponds to that State's Overall Allocation Percentage, shown in Exhibit F of the relevant Settlement Agreement, to figure each Subdivision's dollar share of the Contingency Fee Fund.

Illustrative example:

- 1% * $195,364,179.86 = $1,953,641.80 [amount of the Contingency Fee Fund corresponding to State A]
- Assume a total of $6,000,000 is owed under contingency fee contracts for State A.
- $220,000 [from para. 2.b] ÷ $6,000,000 = 3.6666667%
- 3.6666667% * $1,953,641.80 = $71,633.53

[6] In this example, $500 million is the amount theoretically owed under all contingency fee contracts for litigation against Released Entities as calculated in paragraph 2.b. This amount is illustrative only; the actual amount will not be known until all litigating subdivisions are identified and the terms of all of their contingency fee contracts are collected.

The award of fees to Attorneys with Qualifying Representations of Participating Litigating Subdivisions will be the average of the final amounts calculated in paragraphs 3.a and 3.b above less any amounts the Fee Panel is authorized to, and does, withhold.[7]

Paragraph 3.a represents allocation based on a proportional share of a National Fee Pool, while paragraph 3.b represents allocation based on a proportional share of the Separate State Fee Pools. In other words, for the National Fee Pool described above in paragraph 3.a, the contingency fee contract rate is compared to all other contingency fee contract rates in the nation. For the Separate State Fee Pools described above in paragraph 3.b, the contingency fee contract terms are compared to the other contingency fee contract terms in that same State. The National Fee Pool and the Separate State Fee Pools are given equal weighting. This is illustrated below.

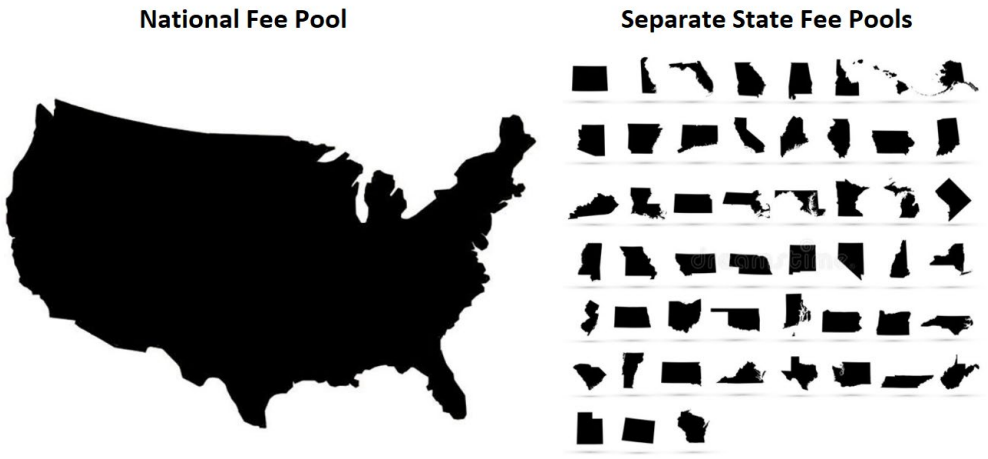

Using the first methodology, Attorneys for two Subdivisions in different States with the same amount calculated under paragraph 2.b would be assigned the same amount under paragraph 3.a. Using the second methodology, Attorneys for the same two Subdivisions would be assigned different amounts under paragraph 3.b because they are in different States. Specifically, the Subdivision in the State with a smaller proportion of Litigating Subdivisions would be allocated more than the Subdivision in the State with a greater proportion of Litigating Subdivisions.

[7] The model also enforces a maximum fee award of 20% of the amount calculated in 2.b. This rule is designed to prevent windfalls by addressing over-allocation in a small number of states with relatively few Litigating Subdivisions. The description in this document of the Mathematical Model is by necessity an abstraction; the precise contours of the calculations are defined in the model itself.

EXHIBIT S
Agreement on the State Outside Counsel Fee Fund for Manufacturer Settlements

1. **Definitions.**

   a. "Manufacturer" means any of Teva and Allergan, and "Manufacturers" means all of the foregoing.
   b. "Multistate Manufacturer Settlement Agreement" means This Settlement Agreement along with the separate settlement of opioids-related claims among 30 or more states and the other Manufacturer.
   c. "This Settlement Agreement" means the settlement agreement between the Settling States and the Manufacturer to which this Agreement is attached as an Exhibit.
   d. "Settling Manufacturer" means the Manufacturer that is a party to This Settlement Agreement.
   e. "Settling States" has the meaning given such term in the relevant Multistate Manufacturer Settlement Agreement.

2. **Creation of a State Outside Counsel Manufacturers Fee Fund.** The Settling States have agreed to the creation of a state outside counsel fee fund to pay reasonable attorneys' fees of Settling States which have retained outside counsel in connection with litigation against one or more Manufacturers (such fund, the "State Outside Counsel Manufacturers Fee Fund").

3. **State Outside Counsel Manufacturers Fee Fund Administration.** The State Outside Counsel Manufacturers Fee Fund shall be administered separately from any other funds for the payment of attorney's fees or costs in connection with This Settlement Agreement, including any common benefit fund, contingency fee fund for subdivision counsel, state cost fund, or MDL expense fund. If necessary, a committee of Attorneys General shall be convened to oversee the State Outside Counsel Manufacturers Fee Fund (the "Manufacturers Fee Fund Committee"). The Manufacturers Fee Fund Committee shall be appointed by the Settling State Members of the Enforcement Committee and shall be comprised solely of Attorneys General of Settling States that engaged outside counsel to pursue litigation against one or more Manufacturers. The Settlement Fund Administrator (the "Fee Fund Administrator") shall administer the State Outside Counsel Manufacturers Fee Fund according to this Exhibit and, if convened, the guidelines and directives of the Manufacturers Fee Fund Committee.

4. **State Outside Counsel Manufacturers Fee Eligibility.**

   a. To receive any amount from the State Outside Counsel Manufacturers Fee Fund, both of the following must be true:
      1. an outside counsel to a Settling State must have filed and maintained an action in the name of a Settling State or its Attorney General against a Manufacturer in a state or federal court as of November 1, 2022; and
      2. the State must become a Settling State for each Multistate Manufacturer Settlement Agreement for which it is eligible.

b. No Settling State (or its outside counsel) shall receive funds from both the State Outside Counsel Manufacturers Fee Fund and any "Additional Restitution Amount" as may be provided for in This Settlement Agreement.
c. In addition to the eligibility criteria set forth in Paragraph 4.a, above, and for the avoidance of doubt, only Settling States under This Settlement Agreement are eligible to receive any funds paid into the State Outside Counsel Manufacturers Fee Fund as a result of This Settlement Agreement.

5. **State Outside Counsel Manufacturers Fee Fund Amount.** The Settling Manufacturer shall pay funds into the State Outside Counsel Manufacturers Fee Fund in an amount equal to, and on the schedule identified in, **Exhibit M** (the "Contribution"). The Settling Manufacturer's Contribution shall be subject to a reduction as described in Paragraph 8, below.

6. **State Outside Counsel Manufacturers Fee Fund Availability and Calculation of Amount.**

a. The State Outside Counsel Manufacturers Fee Fund shall be available to compensate private outside counsel for Settling State Attorneys General for approved fees arising out of representation of the Settling State pursuant to the schedule attached to this agreement as Schedule I (the "Fee Schedule").
b. The Fee Schedule is intended to reflect the fee calculation in subparagraphs 6.c and d, below (the "Fee Calculation"). Subject to adjustments required by Paragraph 8, below, in the event of any discrepancy between the Fee Schedule and the Fee Calculation, the Fee Schedule shall control. Each Settling State, by becoming a Participating State in This Settlement Agreement, agrees that the Fee Schedule reflects the Fee Calculation and waives any right to contest the accuracy of the Fee Schedule, absent manifest error, the exclusion of a Settling State, or the inclusion of a Non-Settling State. The version of the Fee Schedule reflecting any necessary adjustments shall be the "Final Fee Schedule."
c. Except as provided in Paragraph d, below, fees shall be aggregated across the Multistate Manufacturer Settlement Agreements and be calculated by adding two components: (a) a fixed amount consisting of fifty percent (50%) of the amount of remediation funds allocated to a Settling State and its Subdivisions pursuant to the Multistate Manufacturer Settlement Agreements multiplied by 4.5% (or, if lower, the applicable contingency fee percentage in the Settling State's outside counsel contract); and (b) a proportional percentage of the remaining fee due under that Settling State's contract with its outside counsel assuming that fifty percent (50%) of the Settling State's recovery is allocable to a Settling State (rather than allocable to the Settling State's Participating Subdivisions) so that the fees of all eligible Settling States (minus the fixed amount that would have been allocated to any Non-Settling States had they become Settling States) exhausts the State Outside Counsel Manufacturers Fee Fund. The proportional share percentage will be the same for each Settling State

included in the State Outside Counsel Manufacturers Fee Fund. Except as set forth in Paragraph 6.c, fees shall be split proportionally among each Multistate Manufacturer Settlement Agreement, as set forth on the Fee Schedule.

d. Notwithstanding the foregoing, fees for the State of Oklahoma, if it becomes a Settling State under the Multistate Manufacturer Settlement Agreement with Allergan, shall be limited to Oklahoma's share of the State Outside Counsel Manufacturers Fee Fund derived from Allergan's Contribution. Oklahoma's share of the State Outside Counsel Manufacturers Fee Fund derived from Teva's Contribution shall be reallocated proportionally among the other Settling States eligible to receive payments from the State Outside Counsel Manufacturer Fee Fund.

e. All amounts paid will be less the following:

    1. Any costs or fees of the Fee Fund Administrator. The Fee Schedule reflects a holdback amount of $50,000 for such administrative expenses of the Fee Fund Administrator, the remainder of which shall be disbursed proportionally to States receiving monies from the State Outside Counsel Manufacturers Fee Fund at the conclusion of such administration.

7. **Payment by the Fee Fund Administrator.**

a. The Fee Fund Administrator shall hold the Contribution in escrow until the earlier of (1) both Multistate Manufacturer Settlement Agreements become effective or (2) when instructed by the Settling State Members of the Enforcement Committee.

b. Subject to eligibility pursuant to Paragraph 4, above, a Settling State's outside counsel may receive funds from the State Outside Counsel Manufacturers Fee Fund in the following scenarios ("Payment Scenarios"):

    1. The Settling State's outside counsel agrees that the amount listed for such state on the Final Fee Schedule either satisfies in full or exceeds the amounts owed to all such Settling State's outside counsel and such counsel has provided written notice waiving all entitlement to additional fee in respect of any Multistate Manufacturer Settlement Agreement.
    2. The Settling State and its outside counsel enter into a signed writing establishing the amount owed to the counsel, which includes an agreement on the payment of the amount listed for such state on the Final Fee Schedule and waives any right of the State or its outside counsel to additional amounts from the State Outside Counsel Manufacturers Fee Fund.
    3. A final judgment is entered that is no longer appealable, which judgement adjudicates the amount owed to the Settling State's counsel in respect of This Settlement Agreement and directs the Manufacturers Fee Fund Committee how to pay the amount listed on the Final Fee Schedule for such State.

If no Payment Scenario is applicable with respect to a Settling State, then the Settling State's share shall be placed in an interest-bearing escrow account (less reasonable expenses of the Fee Fund Administrator) and held unless and until a Payment Scenario is applicable.

c. Upon the applicability of a Payment Scenario 1 with respect to a Settling State, the Fee Fund Administrator shall pay that Settling State's outside counsel the amount identified on the Final Fee Schedule for such state or such lesser amount that satisfies the Settling State's obligation to its outside counsel in full. Any remaining allocation to such State shall be paid to the Settling State.

d. Upon the applicability of a Payment Scenario 2 or 3 with respect to a Settling State, the Fee Fund Administrator shall release monies from the State Outside Counsel Manufacturers Fee Fund in either the amount held by the Fee Fund Administrator, if the amount of the agreement or judgment is equal to or more than the amount held, or the amount indicated in the agreement or in the final judgment, if the amount in the agreement or judgment is less than the amount held.

e. Nothing herein, including the amounts listed in Paragraph 5 above or on any Fee Schedule, shall prevent a Settling State from arguing in any proceeding with its outside counsel that (i) its recovery was less than fifty percent (50%) of the recovery in the settlement agreement down to and including fifteen percent (15%) of the total recovery; (ii) any payment should be discounted by an appropriate discount rate commensurate to the risk of the settlement agreement and the timeline that the Settling State is receiving its payments; (iii) the settlement amount should be lower because the amount a Settling State receives was reduced because such Settling State's outside counsel failed to obtain joinder from a Settling State's Subdivision(s) that the outside counsel also represented; or (iv) any limitation placed by the Settling Manufacturer bars payment of a higher fee to outside counsel.

f. In the event the amount due to the Settling State's outside counsel from an escrow account is less than the total amount of funds escrowed on the account of the Settling State, the balance shall be paid to the Settling State. In no event, other than a State becoming a Non-Settling State, shall funds revert to a Manufacturer.

8. **Non-Settling States; Reversion and Redistribution.** Amounts owed by the Settling Manufacturer to the State Outside Counsel Manufacturers Fee Fund shall be reduced by amounts allocated to the fixed amount for such State under This Settlement Agreement in the event that a listed State becomes a Non-Settling State. The payments for the other Settling States reflected in the Fee Schedule shall be adjusted by the Fee Fund Administrator to reflect a recalculated proportional percentage under the Fee Calculation.

9. **Interpretation**.

a. This Agreement shall be an Exhibit to each Multistate Manufacturer Settlement Agreement and shall include the Fee Schedule setting forth the presumptive payment calculations for each eligible Settling State. By joining This Settlement Agreement, each State agrees on the presumptive accuracy of the Fee Schedule, absent manifest error, the inclusion of a Non-Settling State, or the exclusion of a Settling State.

b. It is the intent of all parties that the State Outside Counsel Manufacturers Fee Fund function in a similar manner, with similar calculations and mechanics, as the "State Outside Counsel Fee Fund" established in **Exhibit S** of that certain settlement agreement dated as of July 21, 2021 setting forth the terms of settlement between and among McKesson Corporation, Cardinal Health, Inc., and AmerisourceBergen Corporation, on the one hand, and certain settling states and certain participating subdivisions, on the other hand.

Schedule I

Fee Schedule

State	Total Fee	Allergan Share	Teva Share
Alaska	**$1,252,625.36**	**$424,966.99**	**$827,658.36**
Delaware	**$2,194,254.56**	**$744,425.11**	**$1,449,829.45**
Georgia	**$6,557,324.06**	**$2,224,644.65**	**$4,332,679.41**
Hawaii	**$1,272,349.43**	**$431,658.60**	**$840,690.83**
Idaho	**$1,413,869.58**	**$479,670.88**	**$934,198.70**
Kentucky	**$5,087,998.16**	**$1,726,159.60**	**$3,361,838.56**
Mississippi	**$1,737,202.53**	**$589,365.16**	**$1,147,837.38**
Nevada	**$6,279,564.47**	**$2,130,411.64**	**$4,149,152.83**
New Mexico	**$5,218,189.24**	**$1,770,328.36**	**$3,447,860.88**
Ohio	**$6,831,882.94**	**$2,317,791.78**	**$4,514,091.16**
Oklahoma	**$1,470,349.73**	**$1,470,349.73**	**$-**
Puerto Rico	**$4,823,581.25**	**$1,636,453.24**	**$3,187,128.01**
South Dakota	**$673,251.45**	**$228,408.00**	**$444,843.46**
	Admin Expense	**$18,047.03**	**$31,952.97**
	Holdbacks		
	Total	$16,192,680.76	$28,669,762.00

EXHIBIT T
Agreement on the Joint State Cost Fund

1. **Definitions**.

a. "Opioids Defendant" means Teva, Allergan, or such other defendant in opioids-related litigation that enters into a Multistate Settlement after November 1, 2022, and "Opioids Defendants" means all of the foregoing.

b. "Multistate Settlement" means this Settlement Agreement along with any other settlement of opioids-related claims among 30 or more states and an Opioids Defendant.

c. "Settlement Agreement" means the settlement agreement between the Settling States and the Opioids Defendant to which this Agreement is attached as an Exhibit.

d. "Settling Opioids Defendant" means the Opioids Defendant that is a party to the Settlement Agreement.

e. "Settling States" has the meaning given such term in the Settlement Agreement.

2. **Creation of a State Cost Fund.** The Settling Opioids Defendant and the Settling States agree to the creation of a fund to pay costs and expenses associated with litigation and investigations related to the opioids litigation (such fund, the "State Cost Fund"). The State Cost Fund shall be administered separately from any other funds for the payment of attorneys fees or costs in connection with the Settlement Agreement, including any common benefit fund, contingency fee fund for subdivision counsel, subdivision cost fund, or MDL expense fund. However, the State Cost Fund shall be administered jointly with similar "State Cost Funds" created in other Multistate Settlements after November 1, 2022; any state cost funds jointly administered in this manner shall be referred to as the "Joint State Cost Fund." To the extent permissible and feasible, the Joint State Cost Fund may also be jointly administered with any fund for reimbursement of states' litigation and investigation costs established by a bankruptcy plan, including the Mallinckrodt bankruptcy plan, any plans that may emerge from the bankruptcies of Purdue and Endo, and any similar bankruptcies of opioids defendants. To the extent feasible, the Joint State Cost Fund may also be jointly administered with the State Cost Funds established pursuant to the Distributors Multistate Settlement and the Janssen Multistate Settlement.

3. **State Cost Fund Amount.** The Settling Opioids Defendant shall pay into the State Cost Fund in the amount listed on, and on the schedule set forth in, **Exhibit M** (the "Settling Opioids Defendant's Contribution") for the purpose paying States' costs and expenses associated with to the opioid litigation.

4. **Joint State Cost Fund Committee.** A committee of Attorneys General or their designated representatives (such committee, the "Joint State Cost Fund Committee") shall oversee the Joint State Cost Fund. The committee shall be appointed by the Settling State Members of the Enforcement Committee, who shall aim to (i) have equal representation between states that retained contingency fee outside counsel and states that did not retain contingency fee outside counsel with respect to opioids-related litigation, and (ii) maintain consistency of committee membership across state cost funds that compose the Joint State Cost Fund. The Settling State Members of the Enforcement Committee may by majority vote add to or change the composition of the Joint State Cost Fund Committee.

5. **Joint State Cost Fund Administrator.**

a. The Joint State Cost Fund Committee may select an administrator (the "Joint State Cost Fund Administrator"), who shall administer the Joint State Cost Fund and direct payments to Settling States according to the guidelines and directives of the Joint State Cost Fund Committee. While the expenses of the Joint State Cost Fund Administrator shall be reimbursable pursuant to the principles and guidelines listed below, the Joint State Cost Fund Administrator shall first rely on any separate funds that may be set aside for such purpose in any Multistate Settlement.

b. The Joint State Cost Fund Administrator shall be responsible, under the direction and supervision of the Joint State Cost Fund Committee, for receiving and reviewing applications for reimbursement from the Joint State Cost Fund. This may include the creation of an audit process to ensure the integrity of submissions, as well as reimbursement rules to incentivize accurate submissions.

6. **State Cost Fund Guidelines and Principles.**

a. Monies in the State Cost Fund shall be released without any delay to reimburse Settling States for documented costs incurred or paid in connection with litigation and investigation related to the opioid litigation.

b. In allocating the Joint State Cost Fund, the Joint State Cost Fund Committee shall seek to comply with the following principles:

1. Each State Cost Fund should be used to reimburse costs incurred by States that are Settling States in the Multistate Settlement from which funds are paid. (However, the foregoing sentence does not preclude a Non-Settling State that joins a separate Multistate Settlement from participating in the Joint State Cost Fund with respect to contributions made by other Opioids Defendants.)

2. Funds in any State Cost Fund shall be primarily used to reimburse

costs incurred prior to the date on which the relevant Multistate Settlement was first made available for participation to eligible States. Regardless of other factors considered in prioritizing payments, all costs incurred prior to January 1, 2023, shall be paid before any costs incurred after that date are paid.

3. The Joint State Cost Fund shall prioritize the reimbursement of the following over reimbursement of any State's litigation or investigation costs:

    - the reasonable costs of the Joint State Cost Fund Administrator;

    - repayment of National Association of Attorneys General grants made in connection with opioid investigations and litigation, without regard to when the grants were made;

    - repayment of state-attributable costs of any mediator in connection with negotiations of a Multistate Settlement;

4. The Joint State Cost Fund shall seek to prioritize costs in the following order:

    - litigation-related costs; then

    - investigation-related costs; then

    - settlement and negotiation related costs; then

    - cost shares.

5. Costs incurred by a State's outside counsel that the State is contractually obligated to reimburse shall be treated as costs incurred by a State.

6. As between similar categories of costs (e.g., defendant-specific litigation-related costs), the Joint State Cost Fund shall first reimburse costs incurred by a State's outside counsel that the State is contractually obligated to reimburse out of its recovery, and then reimburse costs directly incurred by States.

7. The Joint State Cost Fund shall be available to reimburse only those costs which have not yet been reimbursed to a State from any other source, including any other fund set aside in a Multistate Settlement or bankruptcy plan for the reimbursement of costs or any individual

state settlements.

8. The Joint State Cost Fund should not reimburse expenses that are expected to be reimbursed from another source, such as a bankruptcy debtor, unless such expected reimbursements do not come to fruition within a reasonable amount of time. This includes cost shares paid by states.

9. When coordinating among different state cost funds that each could be used to reimburse a given expense, the Joint State Cost Fund Committee may set guidelines to equitably distribute reimbursements across all state cost funds in a manner that prioritizes costs unlikely to be otherwise reimbursed to a similarly situated State.

10. The Joint State Cost Fund may deny reimbursement of costs, on either an individual basis or a categorical basis, that a supermajority (75%+) of the Joint State Cost Fund Committee determines to be unreasonable.

11. After all costs identified in the foregoing have been reimbursed, the remaining funds in the Joint State Cost Fund shall be distributed to states in proportion to their allocation of remediation payments in the Mallinckrodt bankruptcy plan. Such distribution shall be treated as a reimbursement for States' unenumerated costs of administering the Multistate Settlements and no subdivision shares shall be carved out of such disbursement, nor shall any attorney's fees be assessed against such distribution (unless individually agreed to by a State).

c. In applying the foregoing principles, the Joint State Cost Fund Committee shall have the discretion to vary their application in order to ensure equity among similarly situated states and to facilitate the ease and speed of administering the Joint State Cost Fund. The Joint State Cost Fund Committee may also apply percentages to approximate costs attributable to a particular Opioids Defendant (or categories of Opioids Defendants) in a manner that seeks to treat similarly situated states equitably.

d. The Joint State Cost Fund Committee shall establish guidelines for the submission and approval of expenses eligible for reimbursement from the Joint State Cost Fund, which guidelines may be coordinated and consolidated with any similar cost funds in other state opioid settlements for purposes of joint administration and efficiency.

e. Unless waived by the Joint State Cost Fund Committee, the Joint State Cost

Fund Administrator shall, in accordance with such guidelines, receive from Settling States records sufficient to demonstrate the incurrence and payment of each expense.

f. Where the Joint State Cost Fund Committee determines by a supermajority vote (75%+) that outside counsel for a Settling State has failed to exercise reasonable diligence in reviewing submitted costs for allowability, and such failure has resulted in the reimbursement of unallowed costs to such outside counsel, the Committee shall have the discretion to reduce or recover payments made to such outside counsel in an amount calculated to incentivize the exercise of reasonable diligence.

7. **State Undertakings.** Each State submitting for reimbursement of costs from the Joint State Cost Fund agrees:

a. to only submit costs allowable under this Joint State Cost Fund Agreement;

b. to provide all back-up documentation that may be requested with respect to any submitted cost and to make itself available for any questions related to such costs;

c. to exercise reasonable diligence to ensure that all submitted costs are allowable under (i) this Joint State Cost Fund Agreement, (ii) the State's contract with its outside counsel, if relevant, (iii) state law, and (iv) the policies and procedures applicable to the State's retention of outside counsel, if relevant; and

d. to promptly return any excess payments made to the State or its outside counsel from the Joint State Cost Fund, including payments made for costs that were reimbursed from another source or are not allowable hereunder.

CONTRACT

A Contract for Professional Services

THIS CONTRACT is made and entered into this 11th day of April ,2023, by and between the CITY OF FERNLEY, a municipal corporation within the State of Nevada whose address is 595 Silver Lace Blvd, Fernley, Nevada 89408 (the "City"), Baker Tilly US, LLP, an executive recruitment consultant, whose address is 8219 Leesburg Pike, Suite 800 Tysons, VA 22182 ("Contractor").

WHEREAS, Nevada Revised Statutes ("NRS") Chapter 266 authorizes the City to engage the services of independent contractors; and

WHEREAS, the services of Contractor are deemed to be both necessary and in the best interests of the City; and

WHEREAS, the City desires to retain the services of Contractor on the terms and conditions set forth in this Contract;

NOW, THEREFORE, in consideration of the aforesaid premises, the parties mutually agree as follows:

1. **CONTRACT TERM:** This Contract shall be effective from the day it is approved by the City Council (which date shall be inserted into the introductory paragraph of this Contract) and, subject to appropriation, shall remain in full force and effect until the services are completed unless terminated earlier pursuant to Section 6.

2. **CONTRACTOR'S SERVICES:**

   a. **Description of Services.**

      i. **Attachments:**
         1. **Attachment A.** Scope of Work. Contractor hereby agrees to provide the services set forth in the Scope of Work attached hereto as Attachment A and incorporated herein by this reference.

      ii. **Standard Of Care.** Notwithstanding anything to the contrary in this agreement or in any other contract document relating to the project, in performing its work under this agreement Contractor shall perform its services to the standard of care of a reasonable professional that is performing the same or similar work, at the same time and locality and under the same or similar conditions faced by Contractor Cooperation with City. Contractor agrees that its officers, associates, employees and subcontractors will cooperate with the City in providing the services under this Contract and will be, with advance notice, available for consultation with the City at such reasonable times as to not conflict with the City's other responsibilities.

iii. **General Warranty.** Contractor warrants that all services, deliverables, and/or work product under this Contract shall be completed in a workmanlike manner consistent with standards in the trade, profession, or industry; shall conform to or exceed the specifications set forth in the incorporated attachments; and shall be fit for ordinary use, of good quality, with no material defects.

3. REQUIRED APPROVALCOMPENSATION AND TERMS OF PAYMENT:

a. **Compensation.** The City agrees to pay Contractor for the services set forth in the Scope of Work either a lump sum fee or an hourly fee based on the Fee Schedule attached hereto as Attachment B and incorporated herein by this reference.

b. **Reimbursable Expenses.** Contractor agrees that all direct and indirect expenses are included in the lump sum or hourly fee set forth in the Fee Schedule unless the Fee Schedule specifically provides otherwise.

c. **Payment Invoicing.** Contractor shall submit an invoice for payment for the services provided by Contractor based on the manner or method of payment set forth in Attachment A (Scope of Work) and Attachment B (Fee Schedule).

d. **Timeliness of Billing.** Contractor acknowledges and agrees that timeliness of billing is of the essence to this Contract and recognizes that the City is on a fiscal year ending on June 30. All invoices for services rendered prior to July 1 must be submitted to the City no later than 30 days after the end of the fiscal year.

4. NOTICE: All notices or other communications required or permitted to be given hereunder shall be deemed delivered: (i) when written notice is received by the party to whom it is directed, if delivered personally, or by email; or (ii) three (3) days after deposit with the United States Post Office, if mailed by certified mail, return receipt requested, postage prepaid and addressed to the party to be notified. Notices shall be addressed as follows:

If to the City:
City Manager
c/o Mayor McIntyre
City of Fernley
595 Silverlace Blvd.
Fernley, NV 89408

If to Contractor:
Baker Tilly US, LLP
Anne Lewis
8219 Leesburg Pike, Suite 800
Tysons, VA 22182

5. INSPECTION & AUDIT:

a. **Books and Records**. Contractor agrees to keep and maintain under general accepted accounting principles (GAAP) full, true and complete records, contracts, books, and documents as are necessary to fully disclose to the City, the State of Nevada or the United States Government, or their authorized representatives, upon audits or reviews, sufficient information to determine compliance with all state and federal regulations and statutes.

b. **Inspection & Audit**. Contractor agrees that the relevant books, records (written, electronic, computer related or otherwise), including, without limitation, relevant accounting procedures and practices of Contractor or its subcontractors, financial statements and supporting documentation, and documentation related to the performance of this Contract shall be subject, at any reasonable time, to inspection, examination, review, audit, and copying at any office or location of Contractor where such records may be found, with or without notice by the City, and with regard to any federal funding, the relevant federal agency, the Comptroller General, the General Accounting Office, the Office of the Inspector General, or any of their authorized representatives. All subcontracts shall reflect the requirements of this paragraph.

c. **Period of Retention**. All books, records, reports, and statements relevant to this Contract must be retained a minimum three years and for five years if any federal funds are used under this Contract. The retention period runs from the date of payment for the relevant services by the City, or from the date of termination of this Contract, whichever is later. Retention time shall be extended when an audit is scheduled or in progress for a period reasonably necessary to complete an audit and/or to complete any administrative and judicial litigation which may ensue.

6. TERMINATION OR SUSPENSION:

a. **Suspension**. The City may suspend, without cause, the performance by Contract under this Contract for such period of time as the City, in its sole discretion, may prescribe by providing written notice to Contractor. The suspension shall be effective as of the date set forth in the written notice. With such suspension, the City agrees to pay Contractor the amount of compensation earned as of the effective date of the suspension.

b. **Termination Without Cause**. The City reserves the right to terminate this Contract without cause or default on the part of Contractor with ten (10) days' prior written notice to Contractor. In the event of termination, without cause or default, the City agrees to pay Contractor for the services

performed before the date that notice of termination is received by Contractor.

c. **Termination for Non-Appropriation**. Contractor acknowledges that the City is a governmental entity and the Contract's validity is based upon the availability of public funding under its authority. The City reserves the right to reduce estimated or actual quantities, in whatever amount necessary, without prejudice or liability to the City, if funding is not available or if legal restrictions are placed upon the expenditure of monies for the services required under this Contract. In addition, without prejudice or liability to the City, if funding is not appropriated or otherwise made available to support the continuation of this Contract in any fiscal year succeeding the first fiscal year, this Contract will be deemed to have been terminated automatically when appropriated funds expire and are not available.

d. **Default or Breach.** A default or breach (an "Event of Default") may be declared with or without termination. Each of the following shall constitute an Event of Default:

   i. If Contractor fails, in the judgment of the City, to provide or satisfactorily perform any of the conditions, work, deliverables, goods, or services called for by this Contract, and such failure continues for more than fifteen (15) days after written notice is delivered to Contractor provided that if the nature of such breach is such that although curable, the breach cannot reasonably be cured within a fifteen (15) day period, an Event of Default shall not exist if Contractor shall commence to cure such breach and thereafter rectifies and cures such breach with due diligence, but in no event later than sixty (60) days after the written notice;

   ii. If any state, county, city or federal license, authorization, waiver, permit, qualification or certification required by statute, ordinance, law, or regulation to be held by Contractor to provide the goods or services required by this Contract is for any reason denied, revoked, debarred, excluded, terminated, suspended, lapsed, or not renewed; or

   iii. If Contractor: (i) becomes insolvent, subject to receivership, or voluntarily or involuntarily subject to the jurisdiction of the bankruptcy court; (ii) makes a general assignment for the benefit of creditors; (iii) admits in writing to the inability to pay its debts as they become due; or (iv) takes any action for the purpose of effecting any of the foregoing.

e. **For Cause Termination and Time to Correct. For Cause Termination and Time to Correct**. This Contract may be terminated by the non-defaulting party upon a declared default or breach only after service of formal written notice as specified in paragraph (4), and the subsequent failure of the defaulting party within a reasonable time of receipt of that notice to provide evidence, satisfactory to the non-defaulting party, showing that the declared default or breach has been corrected or is being corrected as expeditiously as is prudent and practicable.

f. **Winding Up Affairs upon Termination.** If this Contract is terminated for any reason, the parties agree that the provisions of this paragraph survive termination:

i. The parties shall account for and properly present to each other all claims for fees and expenses and pay those which are undisputed and otherwise not subject to set off under this Contract. Neither party may withhold performance of winding up provisions solely based on nonpayment of fees or expenses accrued up to the time of termination.

ii. Contractor shall satisfactorily complete work in progress at the agreed rate (or a pro rata basis if necessary) if requested by the City.

iii. Contractor shall execute any documents and take any actions necessary to effectuate an assignment of this Contract if requested by the City; and

iv. Contractor shall preserve, protect, and promptly deliver possession to the City of all proprietary information in accordance with Section 18.

v. If dispute(s) arise during the winding up of affairs upon termination, the parties agree to meet and negotiate in good faith to resolve any such disputes(s).

7. REMEDIES: Except as otherwise provided for by law or this Contract, the rights and remedies of the parties shall not be exclusive and are in addition to any other rights and remedies provided by law or equity, including, without limitation, actual damages exclusive of lost profits.

8. ATTORNEYS' FEES, COSTS, AND EXPENSES: Unless otherwise stated herein, the parties will bear their own attorneys' fees, costs, and expenses in connection with the negotiation, execution, and performance of this Contract.

9. LIMITED LIABILITY: Contract liability of both parties shall not be subject to punitive damages. Liquidated damages shall not apply unless otherwise specified in the

Attachments. Damages for any default or breach by the City shall never exceed the amount of funds appropriated for payment under this Contract, but not yet paid to Contractor, for the fiscal year budget in existence at the time of the default or breach.

10. **FORCE MAJEURE:** Neither party shall be deemed to be in violation of this Contract if it is prevented from performing any of its obligations hereunder due to strikes, failure of public transportation, civil or military authority, act of public enemy, accidents, fires, explosions, or acts of God, including, without limitation, earthquakes, floods, winds, or storms. In such an event the intervening cause must not be through the fault of the party asserting such an excuse, and the excused party is obligated to promptly perform in accordance with the terms of this Contract after the intervening cause ceases.

11. **INDEMNIFICATION:** Contractor shall indemnify, defend, and hold harmless the City, its elected officials, officers, employees, agents, and consultants (collectively, the "City party") from and against any and all claims, liabilities, damages, losses, suits, actions, decrees, arbitration awards, judgments, and any other costs or expenses, including reasonable attorney fees (collectively, "Liabilities"), which may be recovered from or sought against the City party as a result of, by reason of, or as a consequence of: (i) any act or omission, negligent or otherwise, on the part of Contractor, its officers, employees, independent contractors, sub-contractors, vendors, suppliers, consultants, or agents; or (ii) any default in the performance of any obligation of Contractor to be performed under the terms of this Contract, regardless of whether such default is an Event of Default hereunder. In no event shall the language of this Section constitute or be construed as a waiver or limitation of the City's rights or defenses with regard to sovereign immunity, governmental immunity, or other official immunities and protections provided by the Federal and State constitutions or by law. It is expressly agreed that Contractor shall defend the City party at Contractor's expense, by legal counsel reasonably satisfactory to the City, against the Liabilities and in the event that Contractor fails to do so, the City shall have the right, but not the obligation, to defend the same and to charge all direct and incidental costs, including attorney's fees and court costs, to Contractor. Contractor's indemnity obligations herein are not intended to nor shall they relieve any insurance carrier of its obligations under policies required to be carried by Contractor pursuant to the provisions of this Contract. Contractor's obligations under this Section 11 shall survive any termination of this Contract.

12. **INDEPENDENT CONTRACTOR:** Contractor is associated with the City only for the purposes and to the extent specified in this Contract, and in respect to performance of the contracted services pursuant to this Contract, Contractor is and shall be an independent contractor and, subject only to the terms of this Contract, shall have the sole right to supervise, manage, operate, control, and direct performance of the details incident to its duties under this Contract. Nothing contained in this Contract shall be deemed or construed to create a partnership or joint venture, to create relationships

of an employer-employee or principal-agent, or to otherwise create any liability for the

City whatsoever with respect to the indebtedness, liabilities, and obligations of Contractor or any other party. Contractor shall be solely responsible for, and the City shall have no obligation with respect to: (1) withholding of income taxes, FICA or any other taxes or fees; (2) industrial insurance coverage; (3) participation in any group insurance plans available to employees of the City; (4) participation or contributions by either Contractor or the Public Employees Retirement System; (5) accumulation of vacation leave or sick leave; or (6) unemployment compensation coverage provided by the City. Contractor shall indemnify and hold the City harmless from, and defend the City against, any and all losses, damages, claims, costs, penalties, liabilities, and expenses arising or incurred because of, incident to, or otherwise with respect to any such taxes or fees. Neither Contractor nor its employees, agents, or representatives shall be considered employees, agents, or representatives of the City.

13. INSURANCE: Unless expressly waived in writing by the City, Contractor shall, at Contractor's sole expense, procure, maintain and keep in force during the entire term of this Contract those policies of insurance which have been agreed to by the parties as evidenced by the parties initials in the signature spaces provided below. The City shall have no liability except as specifically provided in this Contract. Contractor shall not commence work before Contractor has provided the required evidence of insurance to the City. Any insurance or self-insurance available to the City shall be in excess of, and non-contributing with, any insurance required from Contractor. Contractor's insurance policies shall apply on a primary basis. Until such time as the insurance is no longer required by the City, Contractor shall provide the City with renewal or replacement evidence of insurance no less than thirty (30) days before the expiration or replacement of the required insurance. If at any time during the period when insurance is required by this Contract, an insurer or surety shall fail to comply with the requirements of this Contract, as soon as Contractor has knowledge of any such failure, Contractor shall immediately notify the City and immediately replace such insurance or bond with an insurer meeting the requirements.

COF CTR a. **Workers' Compensation and Employer's Liability Insurance**. Industrial insurance protecting Contractor and the City from potential employee claims based upon job-related sickness, injury, or accident, during the performance of this Contract. Contractor shall provide a work certificate issued by a qualified insurer in accordance with NRS 616B.627. Prior to commencing any work, Contractor shall complete and provide the following written request to a qualified insurer:

CONTACTOR NAME has entered into a contract with Owner to perform work from THE ___ DAY OF _____, 20__ to THE ___ DAY OF _____, 20__ and requests that an industrial insurance provider qualified and licensed to offer such insurance within the State

of Nevada, provide to The City of Fernley, Nevada 1) a certificate of

coverage issued pursuant to NRS 616B.627 and 2) notice of any lapse in coverage or nonpayment of coverage that Contractor is required to maintain. The certificate and notice should be mailed to:

City of Fernley
595 Silver Lace Blvd
Fernley, NV 89408

Contractor may, in lieu of furnishing a certificate of an insurer, provide an affidavit indicating that Contractor is a sole proprietor and that: (1) In accordance with the provisions of NRS 616B.659, Contractor has not elected to be included within the terms, conditions, and provisions of NRS chapters 616A to 616D, inclusive; and (2) Contractor is otherwise in compliance with those terms, conditions and provisions.

COF CTR

b. **Professional Liability Insurance**.

i. Minimum Coverage Limit required (not deductible amount): $1,000,000 Each Claim, $2,000,000 Aggregate.

ii. Retroactive date: Prior to commencement of the performance of this Contract

iii. Discovery period: Three (3) years after the termination date of this Contract.

c. **General Requirements**.

i. Additional Insured: By endorsement to the general liability insurance policy evidenced by Contractor, ***the City of Fernley, its officers, employees, and immune contractors*** shall be named as additional insureds for all liability arising from this Contract.

ii. Waiver of Subrogation: Each insurance policy shall provide for a waiver of subrogation in favor of the City.

iii. Cross-Liability: All required liability policies shall provide cross-liability coverage as would be achieve under the standard ISO separation of insureds clause.

iv. Deductibles and Self-Insured Retentions: Insurance maintained by Contractor shall apply on a first dollar basis without application of a deductible or self-insured retention unless otherwise specifically agreed to by the City. Such approval shall not relieve Contractor from the obligation to pay any deductible or self-insured retention. Any deductible or self-insured retention shall not exceed $5,000 per occurrence, unless otherwise approved by the City.

v. Policy Cancellation: Except for ten days' notice for non-payment of premium, each insurance policy shall be endorsed to state that; without thirty (30) days prior written notice to the City, the policy shall not be canceled, non-renewed or coverage and/or limits reduced or materially altered, and shall provide that notices required by this paragraph shall be sent by certified mail to the address shown below.

vi. Approved Insurer: Each insurance policy shall be issued by insurance companies: (a) authorized to do business in the State of Nevada or eligible surplus lines insurers acceptable to the City and having agents in the State of Nevada upon whom service of process may be made; and (b) currently rated by A.M. Best as "A-VII" or better.

d. **Evidence of Insurance.** Prior to the start of any work, Contractor must provide the following documents to the City:

i. Certificate of Insurance: The Acord 25 Certificate of Insurance form or a form substantially similar must be submitted to the City to evidence the insurance policies and coverages required of Contractor.

ii. Additional Insured Endorsement: An Additional Insured Endorsement (CG20 10 or C20 26), signed by an authorized insurance company representative, **must** be submitted to the City to evidence the endorsement of the City as an additional insured per General Requirements, Subsection 1) above.

iii. Schedule of Underlying Insurance Policies: If an Umbrella or Excess insurance policy is evidenced to comply with minimum limits, a copy of the underlying schedule from the Umbrella or Excess insurance policy may be required.

iv. Review and Approval: Documents specified above must be submitted for review and approval by the City prior to the commencement of work by Contractor. Neither approval by the City nor failure to disapprove the insurance furnished by Contractor shall relieve Contractor of Contractor's full responsibility to provide the insurance required by this Contract. Compliance with the insurance requirements of this Contract shall not limit the liability of Contractor or its sub-contractors, employees or agents to the City or others, and shall be in addition to and not in lieu of any other remedy available to the City under this Contract or otherwise. The City reserves the right to request and review a copy of any required insurance policy or endorsement to assure compliance with these requirements. Contractor will mail all required insurance documents to the City at the address identified in section 4 of this Contract.

e. **Failure to Maintain Required Coverages.** If Contractor fails to carry the required insurance, the City may: (i) order Contractor to stop further performance of the Contract, and declare contractor in breach, terminate the Contract if such breach is not remedied; or (ii) purchase replacement insurance and withhold the costs or premium payments made from the payments due to Contractor or charge the replacement insurance costs back to Contractor.

14. **COMPLIANCE WITH LEGAL OBLIGATIONS:** Contractor shall procure and maintain for the duration of this Contract any state, county, city or federal license, authorization, waiver, permit, qualification or certification required by statute, ordinance, law, or regulation to be held by Contractor to provide the goods or services required by this Contract. Contractor will be responsible to pay all taxes, assessments, fees, premiums, permits, and licenses required by law. Real property and personal property taxes are the responsibility of Contractor in accordance with NRS 361.157 and 361.159. Contractor agrees to be responsible for payment of any such government obligations not paid by its subcontractors during performance of this Contract.

15. **WAIVER OF BREACH:** Failure to declare a breach or the actual waiver of any particular breach of this Contract or its material or nonmaterial terms by either party shall not operate as a waiver by such party of any of its rights or remedies as to any other default or breach.

16. **SEVERABILITY:** If any portion, provision, or part of this Contract is held, determined, or adjudicated by any court of competent jurisdiction to be invalid, unenforceable, or void for any reason whatsoever, each such portion, provision, or part shall be severed from the remaining portions, provisions, or parts of this Contract, and such determination or adjudication shall not affect the validity or enforceability of such remaining portions, provisions, or parts.

17. **ASSIGNMENT/DELEGATION:** To the extent that any assignment of any right under this Contract changes the duty of either party, increases the burden or risk involved, impairs the chances of obtaining the performance of this Contract, attempts to operate as a novation, or includes a waiver or abrogation of any defense to payment by the City, such offending portion of the assignment shall be void, and shall be a breach of this Contract. Contractor shall neither assign, transfer nor delegate any rights, obligations, or duties under this Contract without the prior written consent of the City.

18. **PROPRIETARY INFORMATION:** Any reports, histories, studies, tests, manuals, instructions, photographs, negatives, blue prints, plans, maps, data, system designs, computer code (which is intended to be consideration under this Contract), or any other documents or drawings, prepared or in the course of preparation by Contractor

(or its subcontractors) in performance of its obligations under this Contract shall be

the exclusive property of the City and all such materials shall be delivered into the possession of the City by Contractor upon completion, termination, or cancellation of this Contract. Contractor shall not use, willingly allow, or cause to have such materials used for any purpose other than performance of Contractor's obligations under this Contract without the prior written consent of the City. Notwithstanding the foregoing, the City shall have no proprietary interest in any materials licensed for use by the City that are subject to patent, trademark, or copyright protection.

19. PUBLIC RECORDS: Pursuant to NRS 239.010, information or documents received from Contractor may be open to public inspection and copying. The City will have the duty to disclose unless a particular record is made confidential by law or a common law balancing of interests. Contractor may label specific parts of an individual document as a "trade secret" or "confidential," provided that Contractor thereby agrees to indemnify and defend the City for honoring such a designation. The failure to so label any document that is released by the City shall constitute a complete waiver of any and all claims for damages caused by any release of the records.

20. FEDERAL FUNDING: In the event federal funds are used for payment of all or part of this Contract:

a. Contractor certifies, by signing this Contract, that neither it nor its principals are presently debarred, suspended, proposed for debarment, declared ineligible, or voluntarily excluded from participation in this transaction by any federal department or agency. This certification is made pursuant to the regulations implementing Executive Order 12549, Debarment and Suspension, 28 C.F.R. pt. 67, § 67.510, as published as pt. VII of the May 26, 1988, Federal Register (pp. 19160-19211), and any relevant program-specific regulations. This provision shall be required of every subcontractor receiving any payment in whole or in part from federal funds.

b. Contractor and its subcontractors shall comply with all terms, conditions, and requirements of the Americans with Disabilities Act of 1990 (P.L. 101-136), 42 U.S.C. 12101, as amended, and regulations adopted thereunder contained in 28 C.F.R. 26.101-36.999, inclusive, and any relevant program-specific regulations.

c. Contractor and its subcontractors shall comply with the requirements of the Civil Rights Act of 1964, as amended, the Rehabilitation Act of 1973, P.L. 93-112, as amended, and any relevant program-specific regulations, and shall not discriminate against any employee or offeror for employment because of race, national origin, creed, color, sex, religion, age, disability or handicap condition (including AIDS and AIDS-related conditions.)

21. LOBBYING: The parties agree, whether expressly prohibited by federal, state or local law, or otherwise, that no funding associated with this Contract will be used for

any purpose associated with or related to lobbying or influencing or attempting to lobby or influence any of the following: (a) any federal, state, county or local agency, legislature, commission, council or board; (b) any federal, state, county or local legislator, commission member, council member, board member, or other elected official; or (c) any officer or employee of any federal, state, county or local agency; legislature, commission, council or board.

22. **CERTIFICATION REQUIRED BY NRS 332.065 and NRS 286.737** By signing this Agreement, the CONSULTANT provides a written certification, as a material part of this Agreement, that the CONSULTANT is not currently engaged in, and during the Term shall not engage in, a boycott of Israel. The term "boycott of Israel" has the meaning ascribed to that term in Section 3 of Nevada Senate Bill 26 (2017). The CONSULTANT shall be responsible for fines, penalties, and repayment of any State of Nevada or federal funds that may arise (including those that the CITY pays, becomes liable to pay, or becomes liable to repay) as a direct result of the CONSULTANT's non-compliance with this Section. If, at any time during the formation or duration of this Agreement, CONSUTLANT is engaged or engages in a boycott of Israel, it will constitute a material breach of this Agreement.

23. **PROPER AUTHORITY:** Contractor represents and warrants Contractor has full power and authority to enter into this Contract. Any services performed by Contractor before this Contract is effective or after it ceases to be effective are performed at the sole risk of Contractor.

24. **GOVERNING LAW; VENUE:** This Contract will be interpreted, and the rights and liabilities of the parties determined, in accordance with the laws of the State of Nevada, excluding its conflict of laws rules. In any action or proceeding arising under this Contract, each party (a) consents to the jurisdiction of Nevada Courts, and of the pertinent appellate courts, and consents to the venue of such action or proceeding in Lyon County, Nevada courts, (b) irrevocably agrees that all actions or proceedings arising out of or relating to this Contract shall be litigated in such courts, and (c) consents to personal jurisdiction within Lyon County, Nevada. Each party accepts for itself, generally and unconditionally, the exclusive jurisdiction and venue of the aforesaid courts and waives any defense of lack of personal jurisdiction, improper venue, inconvenient forum or any similar defense, and irrevocably agrees to be bound by any non-appealable judgment rendered thereby in connection with this Contract.

25. **INTEGRATED CONTRACT:** This Contract (including any addenda, exhibits, or attachments incorporated into and made a part of this contract) constitutes the entire agreement and understanding among the parties regarding the matters set forth herein and supersedes all previous negotiations, discussions, and understandings regarding such matters. The parties acknowledge and represent that they have not relied on any promise, inducement, representation, or other statement made in connection with this Contract that is not expressly contained herein. The terms of this Contract are contractual and not a mere recital. In the event of any conflict

between the terms in the terms hereof and Contractor's terms and conditions, the terms of this Agreement shall control and govern."

26. COUNTERPARTS: This Contract may be executed in multiple counterparts, each of which shall be deemed an original, and all of such counterparts together shall constitute one and the same instrument.

27. ADVICE OF COUNSEL: Each party hereto represents and agrees that it has had the opportunity to seek and has sought from attorneys any such advice as it deems appropriate with respect to signing this Contract or the meaning of it. Each party has undertaken such independent investigation and evaluation as it deems appropriate and is entering into this Contract in reliance on that and not in reliance on any advice, disclosure, representation or information provided by or expected from any other party or such party's attorneys. This is an agreement of settlement and compromise, made in recognition that the parties may have different, disputed or incorrect understandings, information and contentions, as to facts and law, and with each party compromising and settling any potential correctness or incorrectness of its understandings, information and contentions as to the facts, law, claims, duties, disclosures and conduct occurring before or during the entry into this Contract. No conduct, failure, misunderstanding or misinformation and no claim of fraud or fraudulent inducement occurring prior to or in connection with the execution hereof shall be a ground for rescission hereof or for recovery of damages, except as otherwise expressly provided herein.

28. MODIFICATION; NO WAIVER: The provisions of this Contract, including this paragraph, may be modified, or waived only in writing signed by both parties. No waiver with respect to any portion of this Contract shall apply to any other portion of the Contract, and a waiver on one occasion shall not be deemed to be a waiver of the same or any other breach on a future occasion. No course of dealing by any party, and no failure, omission, delay, or forbearance by any party in exercising such party's rights or remedies shall be deemed a waiver of any such rights or remedies or a modification of this Contract.

29. INTERPRETATION OF AGREEMENT: This Contract shall be construed without regard to the party or parties responsible for its preparation and shall be deemed to have been prepared collectively by the parties. Any ambiguity or uncertainty arising herein shall not be interpreted or construed against any party hereto on the basis that a party prepared or drafted a particular provision of this Contract.

30. COOPERATION OF PARTIES: The parties agree to cooperate to accomplish the purpose of this Contract and to execute any and all supplementary documents and to take all additional actions not inconsistent with the terms set forth in this Contract that are necessary and appropriate to give full force and effect to the terms and intent of this Contract.

31. NON-DISCRIMINATION: In connection with the performance of work under this Contract, Contractor agrees not to discriminate against any employee or applicant for employment because of race, creed, color, national origin, sex, sexual orientation, gender identity or expression, or age, including, without limitation, with regard to employment, upgrading, demotion or transfer, recruitment or recruitment advertising, layoff or termination, rates of pay or other forms of compensation, and selection for training, including, without limitation, apprenticeship. Contractor further agrees to insert this provision in all subcontracts hereunder, except subcontracts for standard commercial supplies or raw materials.

REMAINDER OF PAGE INTENTIONALLY LEFT BLANK

In witness whereof, the parties hereto have caused this Contract to be signed and intend to be legally bound thereby:

CITY OF FERNLEY

_____
Mayor, City of Fernley Date

_____
City Clerk, City of Fernley Date

Approved as to form:

_____
City Attorney, City of Fernley Date

Originating Department:

_____
Department Head Date

CONTRACT

A Contract for Professional Services

CONTRACTOR, being first duly sworn, deposes and says: That CONTRACTOR. is the Contractor**;** that NAME OF PERSON REPRESENTING CONTRACTOR has read the foregoing Contract; and that he understands the terms, conditions, and requirements thereof.

CONTRACTOR
BY: ANNE LEWIS
TITLE: MANAGING DIRECTOR
FIRM: BAKER TILLY US, LLP
BUSINESS LICENSE #:
Address: 8219 Leesburg Pike, Suite 800
City: Tysons State: VA Zip Code: 22182
Telephone: (703) 923-8214 Fax #:
E-mail Address: **Anne.Lewis@Bakertilly.com**

_____
(Signature of Contractor)

DATED this _____ day of _____, 20__.

STATE OF _____)
) ss
County of _____ _____)

On this _____ day of , in the year 20__, before me, _____ / Notary Public, personally appeared , personally known to me or proved to me on the basis of satisfactory evidence to be the person whose name is subscribed to this instrument, and acknowledged that he executed it.

WITNESS my hand and official seal.

_____
Notary's Signature

My Commission Expires: _____

Our highly regarded executive recruitment process

Our highly regarded executive recruitment process includes five major tasks:

TASKS	PROCESS
1. Recruitment brochure development and advertising	• We schedule and meet with the City Council and key stakeholders, as instructed, to understand your leadership vision, strategic direction and candidate expectations, then use the information we gather to develop a candidate profile, which will require your input and final approval. We consider the profile our search baseline.
2. Execution of recruitment strategy and identification of quality candidates	• Using your approved profile, we develop a colorful, informative and appealing brochure. Then, we embark on a national or regional targeted marketing, recruitment and outreach campaign to identify individuals who best match your desired profile. • Additionally, we simultaneously launch a direct applicant outreach campaign targeting eligible prospects we identify by building a detailed query into our searchable applicant database. • Using our applicant tracking system, we communicate with all applicants about the process, established timelines and the next steps.
3. Screening of applications, review of semi-finalists and selection of finalists	• Once we identify those applicants who most closely match your desired profile, we assign them several tasks, including our Due Diligence Questionnaire and Candidate Questionnaire, while the project team conducts a comprehensive web and social media scan to elicit information that could be relevant to employment and continuation in our process. • We also provide selected applicants with a link that will take them to our one-way video interview portal. The candidates complete a one-way video interview, answering questions designed to give us an additional perspective on each applicant's candidacy related to your desired profile. • Once we gather the responses from the items listed above, we prepare and provide an electronic (PDF) Semi-Finalists Report listing 10 to 15 applicants who best appear to meet your desired profile. This report includes a list of all applicants and copies of resumes, cover letters, due diligence and candidate questionnaire responses. • We then ask you to identify four or five, plus one alternate, as finalists. We then ask this group to complete our management and leadership style assessment, which provides additional information, including development needs, strengths, personality and behavior analysis. This tool provides information about each finalist, which we have found essential to the selection process.
4. Background report checks, reference checks, social media presence, academic verifications	• We secure authorization from each finalist to conduct a comprehensive background records check and reports. • We obtain a list of up to ten current or former supervisors, peers or direct reports from each finalist to contact as references. • We provide a report summarizing all responses to our customized reference questionnaire. • We verify academic credentials and professional certifications. • We conduct an exhaustive review of social and electronic media sites and other publications to identify any information relevant to the hiring of the finalists you interview. • We provide a comprehensive reference check and report for each finalist.

TASKS	PROCESS
5. Final interview process	• Once you identify your finalists, we collaborate with your designated staff to design, prepare and provide technical support to ensure a smooth, effective and efficient interview process, which may include the scheduling and support for virtual interviews. If requested, we work with the selected finalist and your designated staff to finalize an employment agreement.

Value for fees

Value means more than simply checking boxes and meeting your requirements. Value means services that lead to meaningful insights, help improve efficiencies and direct more dollars and resources to achieve Fernley's mission.

Delivering a professional fee estimate for the City of Fernley

We are excited about the opportunity to work with Fernley and have prepared the below fee estimate to meet the City's needs and objectives. Our fees allow for thorough and insightful advice from experienced professionals without unnecessary add-on or startup charges.

The all-inclusive professional fee includes the cost of professional services by the engagement team leader, the project support staff and all project-related expenses such as advertising, preparation of the recruitment brochure, printing, candidate background, reference and academic verification checks and travel expenses for on-site interviews with finalists. Baker Tilly is not responsible for candidates' travel expenses to client location for on-site interviews. Clients generally manage these matters directly with the finalists.

Baker Tilly will bill for this engagement in four installments: 30% upon execution of this agreement, 30% at Phase I, 30% at Phase II, and 10% upon acceptance of an employment offer by the finalist. The fee is not contingent. If you terminate this engagement before completion, Baker Tilly shall invoice the City for any unpaid portion of the fee.

Feel free to direct all questions regarding the professional fee and project-related expenses to Yolanda Howze via email at yolanda.howze@bakertilly.com or via phone at +1 (312) 240 3401.

PROPOSED SERVICES	
Phase I	
Task 1 — Candidate profile development/advertising/marketing	
Task 2 — Identify quality candidates	
Phase II	
Task 3 — Screening of applications and submission of recommended semi-finalists to the client	
Task 4 — Reference checks, background checks and academic verifications	
Phase III	
Task 5 — Final process/on-site interviews with finalists	
Conclusion	
Assistance and technical support for total rewards (salary and benefits), employment offer negotiation, offer and acceptance by finalist	
TOTAL ALL-INCLUSIVE FEE*	**$24,950****

*** BAKER TILLY MAY CONSIDER A PROFESSIONAL FEE REDUCTION OF 10%**
if the City of Fernley is provided additional recruitments during the subsequent 12-month period.

**** Not to exceed $25,000**

CITY OF FERNLEY

City Council
AGENDA REPORT

Meeting Date: April 19, 2023

REPORT TO:	Mayor and City Council
REPORT FROM:	**Charity Birkel, Building Official**

FINANCIAL IMPACT:		**CURRENTLY BUDGETED:**		**FUND/ACCOUNT:**
Yes:	No:	Yes:	No:	N/A

ACTION REQUESTED: Ordinance

AGENDA ITEM: (For Possible Action):

Discussion and possible action to adopt Bill # 325, an Ordinance amending Title 16 Chapter 1 of the Fernley Municipal Code, parking and storage of junk vehicles as follows: This ordinance shall go into effect August 1, 2023.

AGENDA ITEM BRIEF:

A general ordinance to amend title 16 chapter 1 of the Fernley Municipal Code as it relates to parking and storage of junk vehicles.

RECOMMENDED MOTION:

I move to approve Bill # 325 as presented by staff, a general ordinance to amend Title 16 Chapter 1 of the Fernley Municipal Code.

BUSINESS IMPACT (per NRS Chapter 237):

A Business Impact Statement is not required because this is not a rule (term excludes vehicles by which legislative powers are exercised under NRS Chapters 271, 278, 278A, or 278B).

See attached report for background, analysis, alternatives.

ALTERNATIVES:

N/A

BACKGROUND:

The building department has received many code enforcement complaints pertaining to the storage of junk vehicles. Due to the vague nature that the code is currently written, it causes confusion and the inability for staff to prosecute cases pertaining to the parking and storage of junk vehicles.

RELEVANT LAWS, STATUTES, AND REGULATIONS:

Fernley Municipal Code Title 16 Chapter 1 Sections 16.01.01, 16.01.03 and 16.01.04

FINANCIAL IMPLICATIONS:

N/A

ATTACHMENTS:

1. BILL # 325 AMENDING TITLE 16 CHAPTER 1 CLEAN COPY
2. BILL # 325 AMENDING TITLE 16 CHAPTER 1 OF THE FERNLEY MUNICIPAL CODE April 5th

BILL NO. 325

CITY OF FERNLEY

ORDINANCE # 2023-___

CITY OF FERNLEY

AN ORDINANCE AMENDING TITLE 16 CHAPTER 1 OF THE FERNLEY MUNICIPAL CODE, PARKING AND STORAGE OF JUNK VEHICLES AS FOLLOWS: THIS ORDINANCE SHALL GO INTO EFFECT AUGUST 1st, 2023.

THE CITY COUNCIL OF THE CITY OF FERNLEY, hereinafter "the Council" DO ORDAIN That Section 16 of the City of Fernley Code of Ordinances is amended as follows:

Sec. 16.01.01. - Definitions.

The following words, terms and phrases, when used in this title, shall have the meanings ascribed to them in this section, except where the context clearly indicates a different meaning:

Code enforcement officer **means a city employee or department designated by the council to enforce the provisions of this title.**

Council **means the Fernley City Council.**

Dangerous structure. **The term "dangerous structure" is defined in the International Property maintenance code sec 108.1.5.**

Junk vehicle means **Any motor vehicle, boat, trailer, or recreational vehicle or the remains thereof which does not bear a currently valid license plate, is disassembled or in a state of disrepair and is not housed in a garage or other building**

Noxious plant growth **means any accumulation of weeds or other harmful plants that create a danger to persons or animals or pose a fire hazard.**

Rubbish **means any litter, vegetable waste, debris, garbage, junk, non-running vehicles or trailers or parts thereof, filth or refuse of any kind.**

Sec. 16.01.03 Parking and storage of junk vehicles

(a) Except for as stated herein, in section 16.01.04 exemptions, it shall be unlawful for any person to keep, for any reason:

1. **More than 2 junk, inoperative vehicles on any private parcel of property.**
2. **More than 2 unregistered vehicles which are on private property.**

3. **Any junk, inoperative and/or unregistered vehicle must be placed outside of the front yard setback area.**
4. **Any person who is not currently in compliance with this code as modified, shall have until August 1,2023 to meet the requirements of this code.**

Sec. 16.01.04 Exemptions

The following items are exempt from the regulations.

1. **Equipment and materials used for farming, ranching, or keeping of livestock, appropriate to the size and zoning of the parcel, including fencing, lumber, compost, gates, irrigation equipment and materials, etc.**
2. **One antique vehicle. An antique vehicle is defined as any vehicle manufactured more than twenty-five (25) years prior to the current year and which, because of discontinued production and limited availability, is considered to be a model or make of significant value to collectors or exhibitors.**
3. **Antique vehicles shall, if not fully restored be stored in the backyard at least ten (10) feet from the property line for a period of not more than 12 months to allow the restoration to be completed.**
4. **The vehicle needs to be stored on an adequately maintained hard surface and must be screened from public view or be properly covered with a tarp or custom cover.**

PROPOSED on the 5th day of April 2023.

PASSED, APPROVED and ADOPTED this 5th day of April 2023, by the following vote of the Council:

Ayes: _____ Nays: _____ Abstentions: _____ Absent: _____

FERNLEY CITY COUNCIL

By: _____ Date: _____

Neal E. McIntyre, Mayor

Attest By: _____ Date:_____

Kimberly Swanson, City Clerk

BILL NO. 325

CITY OF FERNLEY

ORDINANCE # 2023-___

CITY OF FERNLEY

AN ORDINANCE AMENDING TITLE 16 CHAPTER 1 OF THE FERNLEY MUNICIPAL CODE, PARKING AND STORAGE OF JUNK VEHICLES AS FOLLOWS: This ordinance shall go into effect August 1st, 2023.

THE CITY COUNCIL OF THE CITY OF FERNLEY, hereinafter "the Council" DO ORDAIN That Section 16 of the City of Fernley Code of Ordinances is amended as follows:

Sec. 16.01.01. - Definitions.

The following words, terms and phrases, when used in this title, shall have the meanings ascribed to them in this section, except where the context clearly indicates a different meaning:

***Code enforcement officer* means a city employee or department designated by the council to enforce the provisions of this title.**

***Council* means the Fernley City Council.**

Dangerous structure. ~~The term "dangerous structure" is defined in the city construction code.~~ **The term "dangerous structure" is defined in the International Property maintenance code sec 108.1.5.**

Junk vehicle* means** ~~**any car, truck, trailer, recreational vehicle, boat or other vehicle, or parts thereof, that is non-operational, unlicensed, disassembled or in disrepair.**~~ ***Any motor vehicle, boat, trailer, or recreational vehicle or the remains thereof which does not bear a currently valid license plate, is disassembled or in a state of disrepair and is not housed in a garage or other building

***Noxious plant growth* means any accumulation of weeds or other harmful plants that create a danger to persons or animals or pose a fire hazard.**

***Rubbish* means any litter, vegetable waste, debris, garbage, junk, non-running vehicles or trailers or parts thereof, filth or refuse of any kind.**

Sec. 16.01.03 Parking and storage of junk vehicles

(a) Except for as stated herein, in section 16.01.04 exemptions, it shall be unlawful for any person to keep, for any reason:

1. **More than 2 junk, inoperative vehicles on any private parcel of property.**
2. **More than 2 unregistered vehicles which are on private property.**
3. **Any junk, inoperative and/or unregistered vehicle must be placed outside of the front yard setback area.**
4. **Any person who is not currently in compliance with this code as modified, shall have until August 1, 2023 to meet the requirements of this code.**

Sec. 16.01.04 Exemptions

The following items are exempt from the regulations.

1. **Equipment and materials used for farming, ranching, or keeping of livestock, appropriate to the size and zoning of the parcel, including fencing, lumber, compost, gates, irrigation equipment and materials, etc.**
2. ~~**Junk vehicles in one acre rural residential or lower-density zoning, provided that they are placed outside the front-yard setback area.**~~
3. **Antique vehicles shall, if not fully restored be stored in the backyard at least ten (10) feet from the property line for a period of not more than 12 months to allow the restoration to be completed.**
4. **The vehicle needs to be stored on an adequately maintained hard surface and must be screened from public view or be properly covered with a tarp or custom cover.**

PROPOSED on the 5th day of April 2023.

PASSED, APPROVED and ADOPTED this 5th day of April 2023, by the following vote of the Council:

Ayes: _____ Nays: _____ Abstentions: _____ Absent: _____

FERNLEY CITY COUNCIL

By: _____ Date: _____

Neal E. McIntyre, Mayor

Attest By: _____ Date:_____

Kimberly Swanson, City Clerk

CITY OF FERNLEY

City Council
AGENDA REPORT

Meeting Date: April 19, 2023

REPORT TO:	Mayor and City Council
REPORT FROM:	**Lydia Altick, Deputy City Manager**

FINANCIAL IMPACT:		**CURRENTLY BUDGETED:**		**FUND/ACCOUNT:**
Yes:	No: X	Yes:	No: X	N/A

ACTION REQUESTED: Ordinance

AGENDA ITEM: (For Possible Action):

(Possible Action) First reading and introduction of Bill # 328 an ordinance amending Title 6 of the Fernley Municipal Code to allow responsible dog owners to apply for an Additional Dog Permit and house a maximum of four dogs.

AGENDA ITEM BRIEF:

Key Points:

1. Many individuals in Fernley currently have or are seeking to own additional dogs. Currently, Fernley Municipal Code only allows for the ownership of a maximum of three dogs on a property.
2. In the past, responsible pet owners have been concerned about having to rehome or surrender dogs due to having more than the three-dog limit.
3. The Lyon County Shelter is frequently over capacity and adoptable dogs are waiting for homes. Many people have stated that they would adopt, however, they already have three dogs and cannot legally do so. Allowing responsible pet owners to house a maximum of four dogs could help overcrowded shelters to decrease some of their numbers.

RECOMMENDED MOTION:

N/A

BUSINESS IMPACT (per NRS Chapter 237):

A Business Impact Statement is not required because this is not a rule (term excludes vehicles by which

legislative powers are exercised under NRS Chapters 271, 278, 278A, or 278B).

See attached report for background, analysis, alternatives.

ALTERNATIVES:

N/A

BACKGROUND:

Fernley Municipal Code, which has not been altered since 2002, currently allows for each household to keep a maximum of three dogs. Many times, Animal Control has encountered responsible pet owners who wish to own more than three dogs but are currently not legally able to do so. It is the belief of Animal Control that dogs should remain in homes of responsible owners and requiring responsible dog owners to surrender their beloved pets due to being over the City limit is counterproductive to reducing the number of animals in the shelter. Nationwide, shelters and rescues are over capacity and are struggling to find homes for very adoptable and good animals. By allowing citizens in the City of Fernley to apply for an Additional Dog Permit, we can help to reduce the number of dogs potentially being rehomed due to the current Municipal Code and possibly assist very deserving shelter and rescue dogs to find their forever homes.

RELEVANT LAWS, STATUTES, AND REGULATIONS:

Nevada Statutes: N/A

Fernley Municipal Code: Fernley Municipal Code 6.04 (B)

Policies & Procedure Manual: N/A

Community Assessment: N/A

FINANCIAL IMPLICATIONS:

There are none

ATTACHMENTS:

1. Additional K9 Permit Application_exhibit A
2. Additional K9 Permit Fee_exhibit B
3. BILL # 328

Exhibit A

Proposed Animal Control Additional Canine Permit Application

City of Fernley Animal Control
595 Silver Lace Boulevard
Fernley, NV 89408
Phone-(775) 784-9803

ADDITIONAL DOG LICENSE/PERMIT

Please Print and fill in **all** spaces

A Copy of the rabies certificate **MUST** be presented at time of purchase or included if mailed.

PLEASE PRINT LEGIBLY.

Fernley Municipal Code 6.07(b) states it is unlawful to harbor more than three dogs over the age of 6 months. Applicants may file for a permit for one additional dog under the following circumstances:

1. All dogs residing on the property must be surgically altered (spayed/neutered), with proof provided to Animal Control upon the filing of this application.
2. All dogs residing on the property must be vaccinated against Rabies and licensed with the City of Fernley.
3. The applicant complies with the scoring system for excessive dogs (see attached).
4. The applicant pays a one-time additional permit fee of $25.00 in addition to the yearly licensing fee.

Failure to comply with these conditions could result in the revocation of the Additional Dog Permit and the applicant must comply with the conditions of FMC 6.07 (b) within 30 days of the revocation.

Applicant Information	
Owner:	
Physical Address:	
Mailing Address:	
Phone Number:	Work Phone Number:
Veterinarian's name:	Phone Number:

Pet Information	
Dog Name:	
Breed:	Color:
DOB or approximate age:	
Sex: Male ( ) Female ( )	Altered: Yes No
Microchip Number:	License Tag Number:
For Official Use Only: Approved ( )	Denied ( )

Scoring Chart for Excessive Dogs

An applicant with a score of 5 or greater in any one category or in combination will result in the denial of the application. An applicant will receive a written determination from the Animal Control Officer of the status of the application. If a denial is issued by Animal Control, the applicant will have 7 days to comply with the conditions of FMC 6.07 (b). Failure to do so will result in charges being filed in the Fernley Municipal Court.

Upon approval, any subsequent complaints and convictions for the following offenses will be counted for a rolling twelve months. A score of 5 or greater will result in the revocation of the permit and the owner will need to comply with FMC 6.04(B) within 30 days of the revocation notice. Failure to comply with FMC 6.04(B) within 30 days of the revocation of the additional dog permit could result in criminal charges being filed in the Fernley Municipal Court.

Violation of NRS 574.100 Animal Cruelty, Abuse, or Neglect, FMC 6.05 (B) Abandonment of Animals, or FMC 6.10 Vicious or Dangerous Dog	
History of any charges	**Automatic denial or revocation**

Violation of NRS 568.370 Injure, Worry, or Kill Another Animal (per affected animal)	
Within 12 months	5 Points
Within 24 months	4 Points
Within 36 months	3 Points
Within 48 months	2 Points

Violation of FMC 6.04(C)- Dog at Large (per animal)	
1st Offense	1 Point
2nd Offense	2 Points
3rd Offense	3 Points
4+ Offenses	5 Points

Violation of FMC 6.05 (A) Noisy Animals	
Per Conviction	1 Point

Violation of FMC 6.04 (A)- Failure to License or Immunize (per animal)	
Within 12 months	3 Points
Within 24 months	2 Points
Within 36 months	1 Points

For Official Use Only

Application received: _____/_____/_____

Charge:	If Applicable:	Date of Conviction:	Number of Points:
NRS 574.100- Animal Cruelty	☐Yes ☐No		
FMC 6.05 (B)- Animal Abandonment	☐Yes ☐No		
NRS 568.370- Injure/Worry/Kill/Chase Domestic Animal	☐Yes ☐No		
FMC 6.04 (C)- Dog at Large	☐Yes ☐No		
FMC 6.05 (A)- Noisy Animals	☐Yes ☐No		

Determination:

Approved: ☐	Denied: ☐
Reason for Denial:	

Animal Control Officer: _____ Date: _____

Exhibit B

1. Fee for approval of Additional Canine Permit- One-time fee of $25.00 upon approval in addition to current dog license fees. Fee must be paid within 10 days of approval and proof of Rabies vaccination and surgical alteration must be provided within 10 days of application. This would allow for dogs that are not currently altered to come into compliance with the conditions of the Additional Canine Permit.

BILL NO. 328

CITY OF FERNLEY

ORDINANCE # 2023-___

CITY OF FERNLEY

AN ORDINANCE AMENDING TITLE 6 OF THE FERNLEY MUNICIPAL CODE, ANIMALS AS FOLLOWS: THIS ORDINANCE SHALL GO INTO EFFECT JUNE 1st, 2023.

THE CITY COUNCIL OF THE CITY OF FERNLEY, hereinafter "the Council" DO ORDAIN That Section 16 of the City of Fernley Code of Ordinances is amended as follows:

Sec. 6.04. - Dogs.

(b) Number of dogs.

(1) ***Number of dogs restricted.*** **It is unlawful, except as otherwise provided herein, for any single-family unit or residence to keep or harbor more than three (3) dogs over the age of six (6) months. No dogs may be kept or harbored on any property unless the owner or responsible party of said dogs resides upon that property.**

The above limitation does not apply to:

a. Dogs being used for the purpose of herding livestock or the protection of livestock against predators on zoned farm or ranch property;

b. Licensed Kennels;

c. Animal hospitals operated by a licensed veterinarian; or

d. Approved holders of the additional dog permit

(2) ***Application for Exception:*** **Animal Control shall have the authority to approve an exception allowing for a maximum of one (1) additional dog to be kept at the residence. Any person who wishes to harbor more than three dogs shall fill out the Additional Dog Permit application form which shall be granted or denied by Animal Control. Any exception granted by the Animal Control may be revoked by Animal Control if good cause is found. Good cause shall, but is not limited to:**

a. Seizure of animals in connection with suspicion of or conviction of a violation of NRS 574.100, animal cruelty/neglect

b. Accumulation of 5 or greater points on the "Scoring Chart for Excessive Dogs"

c. Dogs harbored in excess of the number granted in the exception

d. Failure to comply with Rabies license requirement

e. Harboring more than permitted number of dogs

(3) Security dogs. Up to three dogs for security of an ongoing authorized and licensed use may be kept upon commercial or industrial property without the owner or responsible party of said dogs residing thereon. The area in which said security dogs are maintained shall be enclosed or fenced and be posted with signs clearly indicating "Guard Dog on Duty."

PROPOSED on the 19th day of April 2023.

PASSED, APPROVED and ADOPTED this19th day of April 2023, by the following vote of the Council:

Ayes: _____ Nays: _____ Abstentions: _____ Absent: _____

FERNLEY CITY COUNCIL

By: _____ Date: _____

Neal E. McIntyre, Mayor

Attest By: _____ Date:_____

Kimberly Swanson, City Clerk

CITY OF FERNLEY

City Council
AGENDA REPORT

Meeting Date: April 19, 2023

REPORT TO:	Mayor and City Council
REPORT FROM:	**Trisha Conner, Assistant to the City Manager**

FINANCIAL IMPACT:		**CURRENTLY BUDGETED:**		**FUND/ACCOUNT:**
Yes: X	No:	Yes: X	No:	220-480-810

ACTION REQUESTED: Motion

AGENDA ITEM: (For Possible Action):

For Possible Action to approve the Community Response & Resource Center project 50% Construction Document submittal and approval to move forward with 100% Construction Documents.

AGENDA ITEM BRIEF:

On February 15, 2023, City Council approved the Design Development submittal for the Community Response & Resource Center project. The project team has been working on the 50% Construction Documents for the project. Project consultants will present the 50% Construction Documents (CD) to the Council for approval, will review the 50% CD cost estimate, and give a project update. Staff is looking for direction from the Council on whether to move forward with the development of 100% Construction Documents for all Phases (Base Bid, Alternate A, and Alternate B) of the project or to move forward with the Base Bid and Alternate #A or to move forward with only the Base Bid. Secured project funding should be considered moving forward.

RECOMMENDED MOTION:

"I motion to approve the 50% Construction Documents for the Community Response & Resource Center project and to appoint staff to move forward with 100% Construction Documents for the Base Bid of the project."

BUSINESS IMPACT (per NRS Chapter 237):

A Business Impact Statement is not required because this is not a rule (term excludes vehicles by which legislative powers are exercised under NRS Chapters 271, 278, 278A, or 278B).

See attached report for background, analysis, alternatives.

ALTERNATIVES:

Council may make changes to the Construction Documents and/or move forward with 100% CDs for the Base Bid and Alt. A or move forward with 100% CDs for the Base Bid, Alt. A and Alt. B of the project.

BACKGROUND:
PRIOR CITY COUNCIL ACTION

- On April 6, 2023, City Council approved Resolution 23-001 to commit 5% local match for the Nevada Department of Transportation 2023 Transportation Alternatives Program Grant application for Multi-modal transportation improvements required for the Community Response & Resource Center project. Council also approved Resolution 23-002 to commit unassigned fund balance that is in excess of 8.3% of General Fund expenditures less capital outlay for the purpose of funding the City of Fernley Community Response & Resource Center.
- On April 5, 2023, City Council directed staff to remove/relocate the Old School House building from the Fernley Depot property to make room for the Community Response & Resource Center project.
- On March, 15, 2023, City Council approved staff to apply for local, state, and federal grant funding requests and committed $4,000,000 in City reserve funds for the construction of the Community Response & Resource Center.
- On February 15, 2023, City Council approved the Community Response & Resource Center project Design Development Submittal.
- On December 21, 2022, City Council approved the contract with Headway Transportation LLC to conduct a traffic study for the Community Response & Resource Center in the amount of $22,000.00.
- On November 2, 2022, City Council approved the revised re-scoping, floor, plan, schematic plan, and cost estimate of the Community Response & Resource Center. On October 5, 2022, City Council tabled the decision regarding the revised schematic design and cost estimates of the Community Response & Resource Center. Council directed staff to report back on November 2, 2022, and inform council about why the workgroup decisions were made regarding the revised schematic design. The council also appointed two council members to the CRRC workgroup to discuss layout options.
- On October 5, 2022, City Council approved a contract between the City of Fernley and Resource Concepts, Inc. for environmental consulting services for the project in the amount of $25,000.00.
- On July 7, 2022, City Council approved the schematic design and cost estimate of the Community Response & Resource Center. The CRRC, as presented on July 7th, was a single story 56,000 gsf facility that consisted of two separate structures at a total base bid construction cost including breakout of $38,491.547.00.
- On July 7, 2022, City Council approved the Owner-Construction Manager At Risk Pre-Construction agreement between the City of Fernley and Core Construction in the amount of $94,500.00.
- On June 15, 2022, City Council approved the Lyon County and City of Fernley Subrecipient ARPA Agreement in the amount of $300,000 for the construction of the Community Response & Resource Center. On April 14, 2022, at the Lyon County Board of Commissioners meeting, the CRRC Workgroup presented the project and requested ARPA funding. The Lyon County Board of Commissioners graciously awarded ARPA funds to the City of Fernley in the amount of $350,000 for the CRRC project. On May 23, 2021, the Lyon County Board of Commissioners revisited their ARPA allocations and reduced the amount to $300,000 for the CRRC project. The City is currently in the process of approving the funding agreement.
- On June 15, 2022, City Council approved the Letter of Intent to a lease agreement between the Boys & Girls Club of Truckee Meadows to operate and maintain sections of the Community Response & Resource Center once constructed. This is in part due to the leadership, and the Boys & Girls Club experience of operating and maintaining facilities and programs, including five Boys & Girls Club afterschool and summer programs, thirteen school sites, four early learning centers, and seven teen centers. Under this agreement, the Boys and Girls Club would operate the day-care, afterschool programming, kitchen, cafeteria, gym, and meeting rooms. The letter of intent is critical to a funding

source, the Nevada ARPA Child Care Extension Grant for the construction of the Community Response & Resource Center.

- On February 16, 2022, City Council approved the contract for the Owners Representative Construction Manager as Agent contract with Cumming Management Group. This contract is to ensure there is a person/company who represents the City and focuses on evaluating the project from the City's perspective beginning at the earliest stages of planning and continuing through occupancy. At the same meeting, the Council also approved staff to enter into contract negotiations with the selected CMAR for reconstruction services for the CRRC.
- City Council approved the programming and services that will be in the CRRC on January 19, 2022. The programming and services in the CRRC must be ARPA eligible because the City is using ARPA monies to fund the project. Staff identified the following ARPA eligible services and programs needed in our community in response to the public health crisis that will be in the Community Response & Resource Center: COVID-19 testing and vaccination site, workforce development services/programming, education assistance services, afterschool programming, and early childhood education.
- On October 20, 2021, City Council approved the contract with TSK Architects for the architectural engineering services of the Community Response & Resource Center. The scope of work, among other items, included the Pre-Design Services/Concepts Update to determine the programming and services that will be housed in the CRRC and the completion of the final schematic design.
- On August 4, 2021, Fernley City Council approved the American Rescue Plan Act spending plan which included $12,000,000 for the development of a Community Response & Resource Center.

COMMUNITY RESPONSE & RESOURCE CENTER 50% CONSTRUCTION DOCUMENTS

On February 15, 2023, City Council approved the Design Development submittal for the Community Response & Resource Center project. The project team has been working on the 50% Construction Documents for the project. Project consultants will present the 50% Construction Documents (CDs) to the Council for approval and will review the 50% CDs cost estimate. Also included in the 50% CDs is the 50% CD Review and the Risk Mitigation Tracking Log - 50% CD.

The project at hand has completed the conceptual design, the schematic design, and the design development phases. The 50% Construction Documents are just that, construction drawings are half completed or 50% and is a major milestone to be approved by City Council. At 50% CDs, there is enough information and detail to allow the team to finalize the draft construction schedule and construction plan for the project, including the spec book or the material list. This process involved significant coordination and buy-in with the City and end users. Feedback from Trade Partners on material lead times, construction logistics and available manpower will all be considered to better ensure the information is biddable and realistic. The 50% CDs will be presented with an updated cost estimate. However, the cost estimate is still considered a 'moving target' that will be finalized in the Guaranteed Maximum Price proposal. The 50% CDs is realistically the last opportunity to make significant adjustments to the project design should costs be determined to be above budget. A check on market conditions, adjusting escalation for the next twelve months is critical to protect against big overruns.

Staff reviewed the 50% CDs and the following concerns will be addressed by the project team:

- The parking at the north end of Lois Lane (highlighted green) is going to conflict with the existing parking to the east for the private insurance office. It also looks very close to the intersection and I worry about cars backing out while cars make the right turn onto Lois Lane. With the addition of a decel lane, this distance could be diminished even more.
- The sidewalk connectivity at the driveway (highlighted pink) needs some work.
- The two water mains that enter through the county property and stub into the City property will need to be looped as a part of our project to construct site improvements. They were left as dead ends

because the final building location was still unknown at the time.

As we move forward with the project, amendments to the building plans may occur and the cost of these adjustments must be considered carefully.

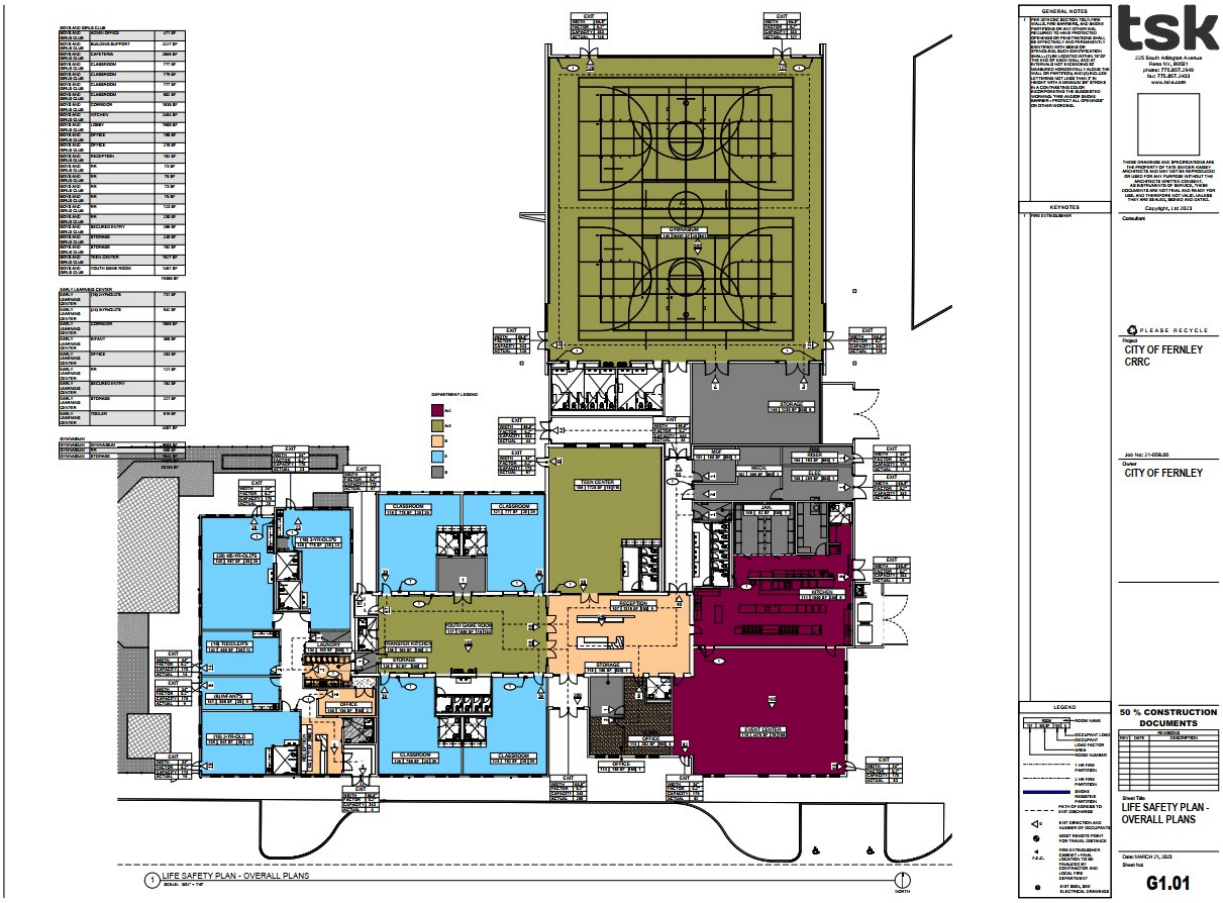

MOVING FORWARD - 100% CONSTRUCTION DOCUMENTS

Once City Council approves the 50% CDs, the project consultants will move on to developing the 100% CDs. The final set of drawings will specify every element of the project, from the structure to the paint colors. The results of the project's Traffic Study completed by Headway Transportation will also be taken into account in the 100% CDs. The road improvements required by the Traffic Study will increase the cost estimate because it was not included in the design development cost estimate or the 50% CDs. As we move into the 100% Construction Documents, costs should be well understood and managed within budget. However, Core will review the documents one last time to pick up any remaining cost items that have evolved through detailing and coordination with remaining disciplines. Core's main focus in this phase is to prepare for Trade Partner procurement. Major milestones include the following:

- Final Bidability Review of Documents
- Publish Legal Ad in Local Publications
- Publish Ads for Pre-qualification in other Construction Specific Media
- Develop Subcontractor Trade Scopes of Work and Bid Forms
- Finalize Construction Contract Terms (Less Final GMP Value)

Based on the funding available and secured for the project and the funding gap, staff are looking for directions to whether to move forward with the development of 100% Construction Documents for:

- all Phases (Base Bid, Alternate A, and Alternate B) of the project or
- to move forward with the Base Bid and Alternate #A or
- to move forward with the Base Bid only.

RELEVANT LAWS, STATUTES, AND REGULATIONS:

2 CFR Part 200, Section 601 and 602 of the Social Security Act
NRS Chapter 338

FINANCIAL IMPLICATIONS:

The City of Fernley must comply with Department of Treasury 2 CFR part 200 and Section 601 and 602 of the Social Security Act. Amerian Rescue Act funds may be used to cover eligible costs incurred during the period that begins March 3, 2021, and ends on December 31, 2024, as long as the award funds for the obligations incurred by December 31, 2024 are expended by December 31, 2026. Any funds not expended by December 31, 2026 to cover such obligation must be returned.

ATTACHMENTS:

1. 2023-03-21 - 50 CD_PM_V1
2. 2023-03-21 - 50 CD_PM_V2
3. 20230321 Ferley CRCC Base Bid 50CD
4. 20230321 Fernley CRCC Alt A 50CD
5. 23230321 Fernley CRCC Alt B 50CD
6. Fernley CRRC 50%CD Review
7. Risk Mitigation Tracking Log - 50% CD

Project Specification Manual

City of Fernley
Community Response & Resource Center

50% Construction Document Submittal
Volume 1

Issue Date: March 21, 2023



Ms. Daphne Hooper, City Manager
City of Fernley, Nevada
595 Silverlace Blvd.
P. 775-784-9858
E. dhooper@cityoffernley.org

225 S Arlington, Suite A | Reno, NV 89501 | Ph: 775.857.2949

SECTION 000102 - PROJECT INFORMATION

PART 1 GENERAL

1.1 PROJECT IDENTIFICATION

A. Project Name: City of Fernley Community Response and Resource Center, located in the property bounded by East Main Street (north), Lois Lane (east), Peppertree Lane (south), and a modular home community to the west.

B. Architect's Project Number: TSK Project No.: 21-058.00.

C. Owner's Project Number: _____.

D. The Owner, hereinafter referred to as Owner: City of Fernley.

E. Owner's Project Manager: Daphne Hooper, City Manager.
   1. Address: 595 Silverlace Blvd..
   2. City, State, Zip: Fernley, NV 89408.
   3. Phone: 775-784-9858.
   4. E-mail: dhooper@cityoffernley.org.

1.2 PROJECT DESCRIPTION

A. Summary Project Description: The project is intended to be approximately 50,000 s.f. and inclusive of the Community Center, Meeting Rooms, Kitchen, Youth Center and the complimentary spaces.

B. Contract Scope: Construction.

C. Contract Terms: Lump sum (fixed price, stipulated sum).

1.3 PROJECT CONSULTANTS

A. The Architect, hereinafter referred to as Architect: TSK Architects.
   1. Architect's Project Manager: Kolby Harpstead, AIA
   2. Address: 225 S. Arlington Avenue, Suite A.
   3. City, State, Zip: Reno, NV 89501.
   4. Phone: 775.501.6785.
   5. E-mail: kharpstead@tska.com.

1.4 PROCUREMENT DOCUMENTS

A. Availability of Documents: Complete sets of procurement documents may be obtained:
   1. From Owner at the Project Manager's address listed above.

PART 2 PRODUCTS - NOT USED.

PART 3 EXECUTION - NOT USED.

END OF SECTION

SECTION 000110 - SPECIFICATION INDEX

PROCUREMENT AND CONTRACTING REQUIREMENTS

DIVISION 00 -- PROCUREMENT AND CONTRACTING REQUIREMENTS

000101 - Project Title Page

000102 - Project Information

000107 - Seals Page - Not Included in this Submittal

000110 - Specification Index

007200 - General Conditions

TECHNICAL SPECIFICATIONS

DIVISION 01 -- GENERAL REQUIREMENTS

011000 - Summary

012300 - Alternates

012500 - Substitution Procedures

012600 - Contract Modification Procedures

012613 - Request for Information

013000 - Administrative Requirements

013300 - Submittal Requirements

013216 - Construction Progress Schedule

014000 - Quality Requirements

014100 - Regulatory Requirements

015000 - Temporary Facilities and Controls

016000 - Product Requirements

017300 - Execution Requirements

017419 - Construction Waste Management and Disposal

017510 - Electrical Systems Commissioning

017800 - Closeout Submittals and Procedures

017836 - Warranties and Bonds

017900 - Demonstration and Training

019113 - General Commissioning Requirements

DIVISION 02 -- EXISTING CONDITIONS

For Site Preparation and Earthwork, see Division 31

For Pavements and Site Improvements, see Division 32

For Site Utilities, see Division 33

024126 - Selective Electrical Demolition

DIVISION 03 -- CONCRETE

033000 - Cast-in-Place Concrete

033511 - Concrete Floor Finishes

DIVISION 04 -- MASONRY

042000 - Unit Masonry

DIVISION 05 -- METALS

051200 - Structural Steel Framing

052100 - Steel Joist Framing

053100 - Steel Decking

054000 - Cold-Formed Metal Framing

055000 - Metal Fabrications

055133 - Metal Ladders

055213 - Pipe and Tube Railings

DIVISION 06 -- WOOD, PLASTICS, AND COMPOSITES

061000 - Rough Carpentry

061053 - Miscellaneous Rough Carpentry

062000 - Finish Carpentry

064100 - Architectural Casework

066116 - Solid Surfacing Fabrications

066400 - Fiber Reinforced Plastic (FRP) Paneling

066410 - Fiber Reinforced Laminate Panels (FRL)

DIVISION 07 -- THERMAL AND MOISTURE PROTECTION

071300 - Sheet Waterproofing

072100 - Building Insulation

072500 - Weather Barriers

074113 - Metal Roof Panels

074213 - Metal Wall Panels

075419 - Polyvinyl-Chloride Roofing

076200 - Sheet Metal Flashing and Trim

077113 - Premanufactured Metal Coping and Edge Systems

077200 - Roof Accessories

078400 - Firestopping

079200 - Joint Sealants

DIVISION 08 -- OPENINGS

081113 - Hollow Metal Doors and Frames

081416 - Flush Wood Doors

083100 - Access Doors and Panels

084313 - Aluminum-Framed Entrances and Storefronts

084413 - Glazed Aluminum Curtain Walls

087100 - Door Hardware

088000 - Glazing

DIVISION 09 -- FINISHES

090561 - Common Work Results for Flooring Preparation

092116 - Gypsum Board Assemblies

092216 - Non-Structural Metal Framing

093000 - Tiling

095100 - Acoustical Ceilings

096500 - Resilient Flooring, Wall Base and Accessories

096566 - Resilient Athletic Flooring

096723 - Resinous Flooring Systems

096813 - Tile Carpeting

097213 - Digital Printed Vinyl Wallcovering

099000 - Painting and Coating

099600 - Anti-Graffiti Coatings

DIVISION 10 -- SPECIALTIES

101100 - Visual Display Units

101124 - Tackable Wall Systems

101400 - Signage

102113.17 - Phenolic Toilet Compartments

102601 - Wall and Corner Guards

102800 - Toilet Room Accessories

104300 - Emergency Aid Specialties

104400 - Fire Protection Specialties

107500 - Flagpoles

DIVISION 11 -- EQUIPMENT

114000 - Foodservice Equipment

116623 - Gymnasium Equipment

116813 - Playground Equipment

DIVISION 12 -- FURNISHINGS

122400 - Window Shades

12 9300 - Site Furnishings

DIVISION 13 -- SPECIAL CONSTRUCTION (NOT USED)

DIVISION 14 -- CONVEYING EQUIPMENT (NOT USED)

DIVISION 21 -- FIRE SUPPRESSION

210000 - Fire Suppression Systems

210530 - Hangers and Supports for Fire Suppression Systems

210540 - Seismic Bracing for Fire Suppression Systems

DIVISION 22 -- PLUMBING

220000 - Plumbing

220500 - Basic Materials and Methods for Plumbing

220520 - Operation and Maintenance of Plumbing Systems

220530 - Hangers and Supports for Plumbing Systems

220540 - Seismic Bracing for Plumbing Systems

220700 - Plumbing Insulation

220800 - Testing, Adjusting, and Balancing of Plumbing Systems

220900 - Plumbing Fixtures and Trim

221000 - Facility Water Distribution

221300 - Facility Sanitary Sewerage

221400 - Facility Storm Drainage

221500 - Facility Natural Gas Systems

223400 - Gas Fired Domestic Water Heaters

DIVISION 23 -- HEATING, VENTILATING, AND AIR-CONDITIONING (HVAC)

230000 - Heating, Ventilating, and Air Conditioning

230500 - Basic Materials and Methods for HVAC

230520 - Operation and Maintenance of HVAC Systems

230530 - Hangers and Supports for HVAC Systems

230540 - Seismic Bracing for HVAC Systems

230700 - HVAC Insulation

230800 - Testing, Adjusting, and Balancing of HVAC Systems

231600 - Facility Natural Gas Systems

233100 - HVAC Ductwork

233110 - HVAC Ductwork Accessories

233120 - Exterior Ductwork

233400 - HVAC Fans and Hoods

233700 - Air Outlets and Inlets

238300 - Rooftop Packaged Gas-Electric Unit (3-10 Tons)

238600 - Split System Air Conditioning Systems

238900 - Electric Heaters

DIVISION 26 -- ELECTRICAL

260001 - Electrical General Provisions

260002 - Electrical Submittals

260003 - Temporary Electrical Facilities for Construction

260503 - Equipmment Wiring Connections

260519 - Low-Voltage Electrical Power Conductors and Cables

260526 - Grounding and Bonding for Electrical Systems

260529 - Hangers and Supports for Electrical Systems

260530 - Seismic Protection

260533 - Raceway and Boxes for Electrical Systems

260553 - Electrical Identification

260573 - Overcurrent Protection Device Coordination Study

260923 - Lighting Control Devices

262200 - Low-Voltage Transformers

262413 - Switchboards

262416 - Panelboards

262716 - Electrical Cabinets and Enclosures

262726 - Wiring Devices

262813 - Fuses

262819 - Enclosed Switches

262916 - Enclosed Contactors

263323 - Central Lighting Inverter System

263556 - Surge Protective Devices

263600 - Manual Transfer Switches

265100 - Interior Lighting

265600 - Exterior Lighting

266000 - Electrical Systems Testing

DIVISION 27 -- COMMUNICATIONS

270500 – Basic Telecommunications Requirements

270526 – Grounding and Bonding for Communications Systems

270528 – Pathways for Communications Systems

270544 – Sleeves and Sleeve Seals for Communications Pathways and Cabling

271000 – Structured Cable Systems

271100 – Communications Equipment Room Fittings

271116 – Communications Cabinets and Racks

271300 – Communications Backbone Cabling

271500 – Communications Horizontal Cabling

271700 – Broadband Television Distribution System

272101 – Public Wireless LAN (WIFI)

274116 – Audio Video Systems

DIVISION 28 -- ELECTRONIC SAFETY AND SECURITY

281300 - Access Control

281333 - Lockdown - Lockout Systems

281600 - Intrusion Detection

282000 - Video Surveillance

283100 - Fire Detection and Alarm

DIVISION 31 -- EARTHWORK

311000 - Site Clearing

312200 - Earth Moving

313000 - Excavation, Backfilling, and Compacting

314000 – Graded Crushed Aggregate Base Course

DIVISION 32 -- EXTERIOR IMPROVEMENTS

320190 - Landscape Maintenance

321216 - Asphalt Paving

321313 - Concrete Items

321373 – Concrete Paving Joint Sealants

321540 - Decomposed Granite Pavement

321816.13 - Playground Safety Surface

323113 - Chain Link Fences and Gates

324200 - Precast Storm Concrete Items

328400 - Planting Irrigation

329113 - Landscape Soil Preparation

329300 - Planting

DIVISION 33 -- UTILITIES

331130 – Facility Water Distribution

334100 - Storm and Sewer Utility Drainage Pipe

DIVISION 34 -- TRANSPORTATION

DIVISION 40 -- PROCESS INTEGRATION

DIVISION 46 -- WATER AND WASTEWATER EQUIPMENT

466121 - Pressure Filters

APPENEDICIES

Appendix A - Foodservice Cut Sheets

Appendix B - Geotechnical Investigation

Appendix C - Door Hardware Cut Sheets

END OF SECTION

SECTION 007200 - GENERAL CONDITIONS

FORM OF GENERAL CONDITIONS

1.1 THE GENERAL CONDITIONS APPLICABLE TO THIS CONTRACT IS ATTACHED FOLLOWING THIS PAGE.

END OF SECTION

OWNER-CMAR GENERAL CONDITIONS

OF THE CONTRACT

March 21, 2023

TABLE OF CONTENTS

SECTION 1: DEFINITIONS		PAGE
1.1	Project	5
1.2	Work	5
1.3	Owner	5
1.4	Architect	5
1.5	Construction Manager at Risk (CMAR)	5
1.6	Subcontractor	5
1.7	Sub-Subcontractor	5
1.8	Written Notice	5
1.9	Calendar Days	5
1.10	Building Official	6
1.11	Guaranteed Maximum Price (GMP)	6
1.12	CMAR's Contingency	6
1.13	Owner's Contingency	6
1.14	Contract	6
1.15	Submittals and Shop Drawings	7
1.16	Rules and Regulations	7
1.17	Allowances	7

SECTION 2: CONTRACT DOCUMENTS		PAGE
2.1	Intent and Interpretation	7
2.2	Existing Conditions	8
2.3	Requests for Information	8
2.4	Changes in the Work & Change Order Mark-Ups	9
2.5	Construction Change Directives	12
2.6	Use of Contract Documents by CMAR	12

SECTION 3: CONTRACT		PAGE
3.1	Entire Contract	12
3.2	Contract Time	13
3.3	Contract Time Extensions	15
3.4	Substantial Completion	16
3.5	Final Completion	17
3.6	Warranty Requirements	18
3.7	Liquidated Damages	19
3.8	Claims for Damages	19
3.9	Dispute Resolution	20
3.10	Contract Termination by the CMAR	22
3.11	Contract Termination by the Owner	22
3.12	Separate Contracts	23
3.13	Assignment	23
3.14	Severability	24
3.15	Indemnification	24
3.16	Compliance with NRS 338.0117	25
3.17	CMAR Bidding Procedures & Owner's Oversight	26
3.18	CMAR Pre-Qualification of Subcontractors	26
3.19	CMAR Request for Proposals/Bids from Subcontractors	27

SECTION 4: THE OWNER		PAGE
4.1	Owner's Responsibilities	27
4.2	Owner's Authority	28
4.3	Inspection by the Owner	28
SECTION 5: THE CONSTRUCTION MANAGER AT RISK (CMAR)		**PAGE**
5.1	CMAR's Review of Contract	29
5.2	CMAR's Responsibilities	30
5.3	Superintendent, Assistants, and Employee Substitutions	31
5.4	Labor and Materials & Apprentice Utilization Act of 2019	31
5.5	Temporary Utilities, Heating, and Cooling	34
5.6	Emergencies	34
5.7	Progress Photographs	35
5.8	Taxes, Permits, Fees, and Notices	36
5.9	Project Signs	36
5.10	Access Roads	36
5.11	Construction Surveys	36
5.12	Archaeological Findings	36
5.13	Subsurface Conditions	36
5.14	Patents and Royalties	36
5.15	Materials Testing	37
5.16	Correction of the Work	37
5.17	Subcontractors and Substitutes	38
5.18	Safety Program and Hot Work Permits	40
5.19	Site Management and Cleanup Procedures	41
5.20	Roofing Installation and Protection	41
5.21	Quality Assurance and Quality Control Program	41
5.22	Drug and Alcohol Policy	42
5.23	Environmental Safety Regulations *(updated as of December 2019)*	42
5.24	Building Information Modeling (BIM) Required for New Buildings	54
SECTION 6: THE ARCHITECT		**PAGE**
6.1	Architect's Responsibilities	55
SECTION 7: INSURANCE AND BONDING		**PAGE**
7.1	General Requirements of Insurance Documentation	56
7.2	Commercial General Liability Insurance	58
7.3	Commercial Auto Liability Insurance	60
7.4	Workers' Compensation and Employer's Liability Insurance	61
7.5	Property, Builders Risk, Installation Floaters, Boiler and Machinery Insurance	61
7.6	Professional Liability and Extended Reporting Insurance	63
7.7	Electronic Data Liability Insurance	63
7.8	Pollution Liability Insurance	63
7.8	Performance and Payment Bonds	64

SECTION 8: PAYMENT		PAGE
8.1	Schedule of Values	64
8.2	Cost of Work	65
8.3	Progress Payment Applications	65
8.4	Final Payment	67
8.5	Interest Payments	68

SECTION 9: GENERAL CONDITIONS OF THE CMAR		PAGE
9.1	Allowable Expenses Under General Conditions of the CMAR	69

SECTION 10: CMAR'S FEE		PAGE
10.1	Allowable Expenses Under the CMAR's Fee	70

DIVISION ONE (1) REQUIREMENTS	
Section 01001	Construction Procedures for Existing Sites
Section 01010	Summary of the work
Section 01020	Personnel Safety Check Application for New Construction Only
Section 01027	Applications for Payment
Section 01030	Alternates
Section 01035	Modification Procedure
Section 01040	Coordination
Section 01045	Cutting and Patching
Section 01050	Field Engineering
Section 01110	Prevailing Wage and Apprenticeship Utilization Specification and Forms
Section 01200	Project Meetings
Section 01300	Submittals
Section 01310B	Progress Schedules and Cash Flow Plan
Section 01400	Quality Control
Section 01420	References
Section 01500	Construction Facilities and Temporary Controls
Section 01600	Materials and Equipment
Section 01631	Substitutions
Section 01700	Contract Close Out
Section 01710	Final Cleaning
Section 019113	General Commission Requirements when Applicable to Project

SECTION 1: DEFINITIONS

1.1 PROJECT

The term Project is the total construction of which the work performed under the Contract Documents may be the whole or a part. The Project is identified by name, location, and a project number in the Owner-CMAR Construction Contract.

1.2 WORK

The term work includes all labor, materials, services, equipment, tools, transportation, power, water, permanent and temporary utilities, connections, provisions for safety, and all incidental and other things necessary to produce the finished construction as described by the Contract Documents.

1.3 OWNER

The Owner is the person or organization (e.g., City of Fernley; CITY) identified as such in the Owner-CMAR Construction Contract. The term Owner means the Owner and/or the Owner's authorized representative(s).

1.4 ARCHITECT

The Architect is the person or organization responsible for the design of the Project and the preparation of the Drawings and Specifications on behalf of the Owner. The term Architect means the Architect and/or the Architect's authorized representatives.

1.5 CONSTRUCTION MANAGER AT RISK (CMAR)

The CMAR is the person or organization identified as such in the Owner-CMAR Construction Contract. The term CMAR means the CMAR and/or the CMAR's authorized representatives.

1.6 SUBCONTRACTOR

A Subcontractor is a person or organization who has a direct contract with the CMAR to perform any of the work. The term Subcontractor means a Subcontractor and/or the Subcontractor's authorized representatives.

1.7 SUB-SUBCONTRACTOR

A Sub-Subcontractor is a person or an organization with direct or indirect contract with a Subcontractor to perform any of the work. The term Sub-Subcontractor means a Sub-Subcontractor and/or the Sub-Subcontractor's authorized representatives.

1.8 WRITTEN NOTICE

Written notice shall be deemed to have been duly served when delivered in person to the individual or member of the firm or to an officer of the organization for whom it was intended, or when sent by mail to the last known business address, or when sent by e-mail to the designated emails of the authorized representatives herein. Minutes of construction progress meetings and/or Requests for Information (RFI) do not constitute written notice.

1.9 CALENDAR DAYS

All references to a 'day' or to 'days' in the Contract Documents shall be understood to mean calendar days unless specifically indicated otherwise. A calendar day shall be understood to be any day of the year including weekends and holidays.

1.10 BUILDING OFFICIAL

The Building Official is the Building Official of the Authority Having Jurisdiction (AHJ). Any changes to the work that could be construed to have a potential code impact shall be reviewed and approved by the Building Official or other governmental authority, as applicable.

1.11 GUARANTEED MAXIMUM PRICE

The Guaranteed Maximum Price (GMP) is the maximum cost for the work as outlined in the Owner-CMAR Construction Contract and is also referred to as the Contract Sum in various Contract Documents including the CMAR General Conditions of the Contract.

1.12 CMAR'S CONTINGENCY

The CMAR's Contingency is an itemized amount that may be utilized by the CMAR, at the CMAR's discretion to complete the contract work. The CMAR's Contingency may be used for missing items or "holes" within the scope of work or sub-bids or other items that are needed to complete the work, all of which must be agreed to by the Owner, Architect and the CMAR. CMAR Contingency may be used for clear intent of work shown on Drawings and in Specifications that may have been missed by CMAR during completion of work and must be approved by the Owner, Architect, and CMAR. Any portion of the CMAR's Contingency that remains when the work is completed shall be split between the Owner and CMAR in accordance with the percentage values listed in the Owner-CMAR Construction Contract. Any CMAR Contingency remaining unused at the time of final payment shall be split TBD to Owner and TBD to CMAR.

1.13 OWNER'S CONTINGENCY

The Owner's Contingency belongs solely to the Owner for the purpose of being allocated towards stipulated additional work (as itemized in an executed Change Order). Any portion of the Owner's Contingency that remains when the work is completed belongs to the Owner in accordance with the percentage values listed in the Owner-CMAR Construction Contract. If any such claims remain unsatisfied after final payment is made, the CMAR shall refund to the Owner all monies the Owner may be compelled to pay in discharging such claims and any costs relatedthereto.

1.14 CONTRACT

All Contract Documents form the entire Contract between the Owner and the CMAR. The Contract Documents consist of all the following:

A. Owner-CMAR Construction Contract Document
B. General Conditions of the Contract for Construction Manager at Risk (including Division 1 requirements)
C. CMAR Interview Submittal
D. CMAR Fee Proposal
E. Owner's Request for Proposal (RFP) Solicitation
F. RFP Addenda and Amendments
G. Wage Rates for City of Fernley

H. Performance and Payment Bonds
I. Labor and Materials Bonds (if applicable to the Contract)
J. Certificate(s) and related Endorsements of Insurance Liability
K. Specifications
L. Drawings
M. Change Orders (if applicable)

1.15 SUBMITTALS AND SHOP DRAWINGS

Submittals and shop drawings are drawings, diagrams, illustrations, performance charts, brochures, samples, and other data, which are prepared by the CMAR or any Subcontractor, manufacturer, supplier, or distributor, which illustrate some portion of the work. Samples are physical examples furnished by the CMAR to illustrate materials, equipment, finishes, or workmanship, and to establish standards by which the work will be judged.

1.16 RULES AND REGULATIONS

The CMAR shall comply with all applicable portions of the Nevada Revised Statutes (NRS) (including, but not limited to, NRS Chapter 338) and any federal regulations attached herein. The CMAR shall comply with NRS Section338.125 (which pertains primarily to discrimination against employees and applicants because of race, creed, color, national origin, sex, or age). A violation of any provision contained in NRS 338.125 shall constitute a material breach of the Contract.

1.17 ALLOWANCES

An Allowance is a specific value designated by the Owner for use to accommodate work that could not be identified adequately for bidding purposes in the original construction documents. Any portion of an Owner's Allowance that remains when the work is completed belongs to the Owner.

SECTION 2: CONTRACT DOCUMENTS

2.1 INTENT AND INTERPRETATION

2.1.1 The Contract Documents are complementary, and what is required by anyone shall be as binding as if required by all. In the event of an inconsistency between or within any of the Contract Documents listed above, or between any of the applicable codes, the better quality or greater quantity of work shall be provided, at no additional cost to the Owner. If the terms, provisions, conditions, specifications, or requirements contained in one Contract Document should conflict with those contained in another, then such conflict shall be resolved in accordance with the following order precedence:

1) Owner-CMAR Construction Contract
2) General Conditions of the Contract for Construction Manager at Risk (including Division 1 requirements)
3) Owner's Request for Proposal (RFP) for CMAR Solicitation
4) RFP Addenda and Amendments
5) CMAR Interview Submittal

6) CMAR Fee Proposal
7) Specifications
8) Drawings (including Notes)

2.1.2 Specifications shall take precedence over notes on drawings. Large scale drawings shall take precedence over smaller scale drawings.

2.1.3 The Contract Documents are intended to include and require all items, which are necessary for the proper execution and completion of the work.

2.1.4 Interpretations of the Drawings and Specifications and the intent, which are necessary to the proper execution and completion of the work, will be made by the Architect. Words, which have well known technical, or trade meanings are to be interpreted in accordance with such recognized meanings.

2.1.5 The organization of the Specifications into divisions and sections, and the arrangement of the Drawings, shall not be construed to establish controls or limitations on the CMAR regarding dividing the work among Subcontractors, or in establishing the extent of work to be performed by any specific trade.

2.2 EXISTING CONDITIONS

2.2.1 It is the CMAR's responsibility to ascertain any existing conditions that may affect the cost of the proposed work, which could have been discovered by reasonable examination of the site. Reasonable examination shall not be construed to mean any sort of examination that requires the physical removal of any permanent improvement or physical barrier or the excavation or testing of any existing soil.

2.2.2 No additional costs shall be allowed to the CMAR for existing conditions, which could have been discovered by reasonable examination of the site. Reasonable examination shall not be construed to mean any sort of examination that requires the physical removal of any permanent improvement or physical barrier or the excavation or testing of any existing soil.

2.2.3 Existing improvements visible at the job site, for which no specific disposition is made in the Contract Documents, but which could reasonably be assumed to interfere with the satisfactory completion of the work, shall be removed and disposed of by the CMAR at no additional cost to the Owner, after written notification is given to the Owner.

2.2.4 The geotechnical report issued with the Contract Documents is provided for the CMAR's information and is not a Contract Document. The Owner does not guarantee the accuracy or completeness of the report and shall not be liable for any additional work or cost arising out of conclusions reached by the CMAR based upon the geotechnical report. The CMAR assumes all responsibility for any conclusions reached by the CMAR based on the geotechnical report.

2.3 REQUEST FOR INFORMATION

2.3.1 The CMAR shall, upon discovering any discrepancy, conflict, or inconsistency in the Contract Documents, immediately submit a Request for Information (RFI) to the Architect. The Architect, upon receipt of any such request, will promptly investigate

the circumstances and give appropriate instructions to the CMAR, but will take such action only after consultation with the Owner. Until such written instructions are given, any work done by the CMAR, either directly or indirectly relating to such discrepancy, conflict, or inconsistency will be at the CMAR's own risk, and CMAR shall bear all costs arising therefrom. The CMAR shall maintain a sequential log of all questions and inquiries (RFIs).

2.3.2 No work shall be performed by the CMAR without adequate Drawings or Specifications, or that conflicts with or is contrary to the Contract Documents. The CMAR shall immediately report to the Owner and the Architect any discrepancy, conflict, or inconsistency that CMAR may discover, or should have discovered, in the Contract Documents. If the CMAR performs any work contrary to the Contract Documents, CMAR shall be solely responsible and shall bear all costs attributable thereto.

2.3.3 Requests for Information shall be limited to one specific issue or group of related issues and shall not address multiple issues. The Architect will review and respond to RFIs within five (5) working days from the date that the RFI is received by the Architect unless additional time is needed as indicated by the Architect or Owner within such 5-day period. RFIs shall be issued by the CMAR to the Architect in a reasonable and orderly sequence such that they are not unreasonably grouped together and then delivered to the Architect.

2.4 CHANGES IN THE WORK & CHANGE ORDER MARK-UPS

2.4.1 A Change Order is an amendment to the Owner-CMAR Construction Contract and is a written order to the CMAR signed by the Owner and the CMAR, issued after the execution of the Contract, authorizing a change in the work and/or an adjustment in the Contract Sum or the Contract Time.

2.4.2 The Owner and the Architect have the authority to order minor changes in the work, which do not involve an adjustment in the Contract Sum or an extension of the Contract Time. Such changes shall be binding on the CMAR. CMAR shall bear the responsibility of the approved change.

2.4.3 The CMAR shall not proceed with changes to the work without a Change Order or a Construction Change Directive, except for minor changes as identified in Section 2.4.2. If the CMAR proceeds with changes to the work without proper written approval, the CMAR does so at the CMAR's own risk.

2.4.4 Should any event or circumstance occur that the CMAR believes may constitute a change in the work entitling the CMAR to an adjustment to the Contract Sum or the Contract Time, the CMAR shall issue written notice and a request for a Change Order to the Owner within five (5) working days of the occurrence of such event or circumstance. Such written notice shall be issued by the CMAR for any event or circumstance that the CMAR knows, or should have known, to have a potential impact on the work. The request shall describe in detail the related causes and any potential impact to the work. The CMAR shall also identify any anticipated adjustment to the Contract Sum and/or to the Contract Time as a result of such impact. Failure to submit such written notice and a request within the time stipulated and with the information required by this section shall constitute a waiver by the CMAR of the right to a Change Order; provided, however, if CMAR is unable to

provide the potential impact and/or anticipated adjustment to the Contract Sum and/or Contract Time within the designated time, CMAR shall describe in detail why it cannot do so and then promptly provide such information with the subsequent time agreed upon by the Owner, if any.

2.4.5 The cost or credit to the Owner resulting from a change in the work shall be determined in one or more of the following ways:

A. By unit prices stated in the Contract Documents or as subsequently agreed upon.

B. By a lump sum proposal, which is mutually accepted, is properly itemized, and includes the following:

i. Labor, including benefits, payroll taxes, and Workers' Compensation insurance or any other associated labor costs.

ii. Materials entering permanently into the work, including sales tax.

iii. Costs for equipment utilized to perform the Change Order work.

C. By a not-to-exceed maximum cost, which is based on the actual cost of time and materials, properly itemized, and verified, and includes the following:

i. Labor, including benefits, payroll taxes, and Workers' Compensation insurance.

ii. Materials entering permanently into the work, including sales tax.

iii. Costs for equipment utilized to perform the Change Order work.

2.4.6 The costs for changes in the work may be increased by the CMAR and Subcontractor to include taxes (if applicable), insurance, bonding, profit and overhead, CMAR profit and overhead on Subcontractor work, and profit and overhead on work done by the CMAR's own forces. This fixed mark-up shall not exceed the amounts stipulated below for a single Change Order item, or for any group of related items, and shall be full compensation for the cost of overhead and profit related to the Change Order. CMAR and Subcontractor shall not be entitled to additional costs for supervision or field/home office personnel due to a change unless that change includes additional time. In that case, the CMAR shall be allowed to calculate costs for supervision and field office personnel who are directly attributable to the change. Administration or preparation costs shall not be allowed, and no other costs or expenses are agreed to unless otherwise agreed to in writing. All proposals shall be submitted to the Architect in sufficient detail to perform a complete analysis of all costs. The CMAR shall, upon request by the Owner or Architect, submit backup documentation to substantiate itemized costs, which may include, but are not limited to, payroll, invoices for materials, and invoices for equipment utilized in Change Order work. Labor rates or additional rates not identified as part of Prevailing Wage rates shall be identified and approved by Owner prior to start of construction.

CHANGE ORDER MARK-UP SCHEDULE

1. Additive Change Order (for the entity performing the work):	
Total Cost of Change Order	Allowable Fee
+$0.01 to +$9,999.99	15% of the Total Cost
+$10,000.00 and above	10% of the Total Cost
2. Additive Change Order (Contractor Markup) Subcontractor work:	
Total Cost of Change Order	Allowable Fee
Any Amount	5% of the Total Subcontractor Fee
3. Deductive Change Order:	
Total Credit Cost of Change Order	Credit Fee to be Applied
Any Amount	5% of the Total Credit Cost. (*Deductive*)

Example of Deductive Change: Assume <$5,000.00> to be credited. The Contractor must include a 5% credit for profit and overhead, i.e. $5,000.00 X 0.05 = <$5,250.00> total credit to the Contract.

2.4.7 Execution of a Change Order shall be considered complete and final adjustment of the Contract Sum and the Contract Time and represents complete and final resolution of all matters related to, or arising out of, the Change Order. The CMAR may not reserve the right to make further claims with regard to any executed Change Order. Any attempt by the CMAR to reserve such a right shall be considered invalid and unenforceable.

2.4.8 All requests for changes in the work shall be submitted to the Owner and the Architect in sufficient detail to allow a complete analysis of all proposed costs. The CMAR shall, upon request by the Owner or the Architect, submit invoices for materials and equipment utilized in Change Order work. Labor rates, including fringe benefits, shall be in conformance with the applicable prevailing wage rates as defined in the Contract Documents and/or related to the Project.

2.4.9 The CMAR shall provide, at the time of the GMP, detailed rationale and justification for all labor rates to be utilized in Change Order work, including any overtime labor rates applied to the project.

2.4.10 The CMAR will not be entitled to a Change Order for any work that reasonably could have or should have been identified as necessary during the CMAR's participation in the design review process as defined in the Owner-CMAR Preconstruction Contract. The CMAR and the Owner mutually agree that the Owner shall have the right to issue one or more Change Orders at or near the end of the Project, requiring work to be performed after the expiration of the Contract Time, without the assessment of liquidated damages to the CMAR; however, the allowance made for the completion of such incidentals will not negate or affect the Owner's right to assess any liquidated damages that the Owner may be entitled to as a result in the delays of the Project in its entirety by fault of the CMAR. The scope of such Change Orders shall be limited to work that is deemed by the Owner to be incidental in nature and necessary to allow for proper completion of the Project.

2.5 CONSTRUCTION CHANGE DIRECTIVE

2.5.1 A Construction Change Directive (Directive) is a written instruction to the CMAR, signed by the Owner and the Architect, which shall serve as formal and binding direction for the CMAR to proceed with a defined change in the work. The Directive may be implemented when deemed necessary as an interim action until a Change Order can be formally assessed and executed. Upon receipt of a Construction Change Directive, the CMAR shall promptly proceed with the directed changes.

2.5.2 The Owner, without invalidating the Contract, may order changes in the work utilizing a Construction Change Directive with the Contract Sum and/or the Contract Time being adjusted as deemed appropriate. The CMAR shall comply with the provisions of Section 2.4.4 if the CMAR believes that a Construction Change Directive has a potential impact on the Contract Time or the Contract Sum.

2.6 USE OF CONTRACT DOCUMENTS BY CMAR

2.6.1 Copies of the Contract Documents, which are reasonably necessary for the proper execution, progress, and satisfactory completion of the work, shall be provided to the CMAR by the Owner. Copies so furnished are not to be used by the CMAR on any other project.

SECTION 3: CONTRACT

3.1 ENTIRE CONTRACT

3.1.1 The Contract (as made up of the Contract Documents) for preconstruction and construction related services represents the entire and integrated agreement between the Owner and the CMAR and supersedes all prior negotiations, representations, or agreements, either written or oral.

3.1.2 The Contract shall not be binding on either the Owner or the CMAR until the Owner-CMAR Construction has been approved and signed by authorized representative of both the Owner and CMAR, including City Council or their authorized representative.; Performance and Payment Bond(s) and Labor and Materials Bond(s) (when applicable to the Contract) have been properly signed and submitted by the CMAR to the Owner; and a valid Certificate of Liability Insurance is submitted by the CMAR to Owner and that has been approved by the Owner to meet the needs of the Contract.

3.1.3 Execution of the Owner-CMAR Construction Contract shall constitute the CMAR's representation that the CMAR has carefully examined the contents of all Contract Documents that the CMAR has read and understands the same, and specifically agrees to be bound thereby. Additionally, execution of the Owner-CMAR Construction Contract by the CMAR shall represent that the CMAR has inspected the site, familiarized itself with all local conditions, laws, and regulations under which the work is to be performed and has correlated this knowledge with the requirements of the Contract Documents.

3.1.4 The Contract Documents shall not be construed to create a contractual relationship of any kind between the Architect and the CMAR; between the Owner and a Subcontractor; or, between any persons or entities other than the Owner and the

CMAR. The Architect shall, however, have authority to act on behalf of the Owner, to the extent provided in the Contract Documents.

3.1.5 The laws of the State of Nevada and the applicable rules and regulations of the State of Nevada's departments, agencies, and institutions shall govern the Project and the work, as well as federal laws and regulations as applicable. If there is a conflict between the laws or regulations of the State of Nevada and federal laws and regulations, then the stricter will apply, unless the federal law or regulation at issue relates to the American Rescue Plan Act or funding provided thereunder, in which case the federal law or regulation will control. All provisions of law and clauses required by law to be inserted in the Contract shall be deemed to be inserted therein, and the Contract shall be read and enforced as though such provision were included therein, and if through mistake or otherwise, any such provision is not inserted, or is not correctly inserted, then upon the application of either party the Contract shall be physically amended to make such insertion or correction.

3.1.6 The Contract Sum is the sum stated in the Owner-CMAR Construction Contract and is the total dollar amount payable by the Owner to the CMAR for the complete and approved performance of the work in strict conformance with the Contract Documents. The Owner's Contingency belongs solely to the Owner for the purpose of being allocated towards stipulated additional work.

3.2 CONTRACT TIME

3.2.1 The Contract Time is the period of time, in calendar days, allotted in the Contract Documents for the completion of the work. A calendar day shall be understood to be any day of the year including weekends and holidays (refer to Section 1.9).

3.2.2 The date of commencement of the work is the date established in the Notice to Proceed issued by the Owner to the CMAR.

3.2.3 The CMAR shall begin the work on the starting date established in the Notice to Proceed. The CMAR shall perform the work expeditiously with adequate forces and shall complete the work within the Contract Time.

3.2.4 CMAR shall coordinate hours with the Owner prior to scheduling the work. Unless otherwise agreed upon, normal working days are:

- Monday through Friday, excluding holidays observed by the Owner, between the hours of 7:00 a.m. and 3:30 p.m.

3.2.5 If the CMAR desires to work on any weekend day, any Owner's observed holiday, and/or during any other hours of the day CMAR shall request and obtain the Owner's written approval at least five (5) days in advance of the requested deviation. The Owner reserves the right to change working hours.

3.2.6 It is expressly understood and agreed that the Contract Time is a reasonable and acceptable time for completion of the work considering the requirements of the Contract Documents, the type and scope of the Project, and the usual industrial and labor conditions prevailing in the locality of the Project.

It is expressly understood and agreed that the Contract Time includes adequate time to allow for usual weather delays considering the climatic conditions in the area of the Project. No adjustments to the Contract Time will be allowed on the account of usual weather. The CMAR shall include adequate float or other allowance in the CMAR's construction schedule to accommodate weather conditions that may be associated with weather dependent work. An extension to the Contract Time will be considered only in a case where an abnormal or unusual weather delay has directly affected the critical path identified in the approved construction schedule. Any extension of time for delays related to weather shall be considered by the Architect and Owner only when a request for such extension is made in writing by the Contractor and provided further that any such request shall be presented to the Architect or Owner within five (5) working days from the commencement of the period of delay.

A. Time extensions for weather will only be considered when both the number of reasonably anticipatable days of adverse weather **and** the average precipitation in any given month have been exceeded in accordance with the following table, Contractor's non-workdays bank, and allowance of time:

Month	# of Reasonable Anticipated Days of Weather per Month	Average Precipitation
January	4	1.23
February	4	0.95
March	3	0.62
April	2	0.57
May	1	0.44
June	0	0.52
July	0	0.20
August	1	0.21
September	1	0.26
October	2	0.65
November	3	0.66
December	4	1.37

B. Monthly precipitation shall be gauged at the Reno/Tahoe International Airport station as posted on the Reno, WFO, Nevada (266791) website located at: http://www.wrcc.dri.edu/cgi-bin/cliMAIN.pl?nv6791

C. Total non-workdays shall be calculated by overall contract time from the date of Notice to Proceed to date of Substantial Completion.

D. All accepted non-work weather days shall be implemented per Specification Section 01310B.

E. Time extension requests for delays caused by additional adverse weather conditions will be evaluated individually. Inclement weather days in which no work is conducted at the Project site will be considered by the Owner for full day time extensions. Inclement weather days in which any trade or workman actually work on the Project will be considered by the Owner for a maximum of one-half day time extension.

3.2.7 The Contract Sum is based on the Contract Time specified in the Owner-CMAR Construction Contract and shall not be based on an early completion schedule. No additional compensation shall be granted to the CMAR for delays to an early completion schedule and any such claim is hereby waived.

3.3 CONTRACT TIME EXTENSIONS

3.3.1 An extension in the Contract Time for a delay will be allowed only in the case that a full normal working day is lost. Delays will not be allowed for lost partial days or for lost non-working days.

3.3.2 All requests by the CMAR for extensions of the Contract Time due to delays to the work shall be made in writing to the Owner and the Architect within five (5) working days after the start of the delay. Each request shall describe in detail the event or events causing the delay, any related causes, and any impact to the work. Failure to submit such requests within the stipulated time and with the information required by this paragraph shall constitute a waiver by the CMAR of the CMAR's right to an extension of the Contract Time based upon this event or issue.

3.3.3 If the CMAR is delayed at any time in the progress of the work by any act or neglect of the Owner or the Architect, or by any employee of either, by any separate contractor employed by the Owner, or by circumstances that are agreed to be beyond the control and without the fault of the CMAR and the CMAR's Subcontractors and suppliers, the Contract Time may be extended by Change Order for such reasonable time as the Owner may determine.

3.3.4 The CMAR shall not claim or be entitled to any compensation or damages from the Owner because of delay caused by persons other than the Owner, or the Owner's agents and employees, and any entitlement thereto is hereby waived. The CMAR agrees that the CMAR's remedy in the event of a delay caused directly by the Owner, or by the Owner's agents and employees, shall be an extension of Contract Time that includes General Conditions costs and supervision costs at the same rate as agreed upon in the Contract Documents. Exceptions include where the delay unreasonably interferes with the CMAR's ability to complete the work within the Contract Time; so unreasonable in length as to amount to an abandonment of the work; is caused by fraud, misrepresentation, concealment, or other bad faith by the Owner; is caused by active interference by the Owner; and/or is caused by a decision made by the Owner to add significant scope or duration to the work.

3.3.5 The CMAR must submit any request for an extension of Contract Time in strict conformance with this section.

3.3.6 Should the CMAR request and be allowed cumulative time extensions, which cause the Contract Time to end on a non-workday (i.e., a weekend day or a holiday), the non-workday(s) may, at the Owner's discretion, be added to the Contract Time such that the Contract Time ends on a working day.

3.3.7 Extensions to the Contract Time will only be allowed for delays that affect the critical path for completion of the entire work as identified in the approved construction schedule.

3.3.8 Extensions to the Contract Time will not be allowed for delays, which could have been avoided by the exercise of care, prudence, foresight, and/or diligence by the CMAR, or for delays resulting from correction of work rejected as defective or as failing to conform to the Contract Documents.

3.4 SUBSTANTIAL COMPLETION

3.4.1 Substantial Completion is the stage in the progress of the work, or a designated portion thereof, when construction is sufficiently complete in accordance with the Contract Documents, so that the Owner can occupy and/or utilize the work (or portion thereof) for t h e work's intended use. The work will not be considered substantially complete if any of the following conditions exist:

A. Any of the work is incomplete including work identified in the final punch list, which in the opinion of the Owner, would prevent or interfere with occupancy and/or full use of the facility.

B. The Project's mechanical systems have not been tested, balanced, and accepted as being fully complete (including commissioning when applicable).

C. The Project's electrical and life safety systems have not been tested and accepted as being fully complete (including commissioning when applicable).

D. A Certificate of Occupancy has not been issued by the Building Official (either a Temporary/Conditional or a Final/Unconditional Certificate of Occupancy).

E. Final clean-up is not complete.

3.4.2 The following procedure shall be used in establishing Substantial Completion of the work, unless otherwise agreed to inwriting:

A. When the CMAR determines that the work, or a portion thereof, which the Owner agrees to accept separately, is substantially complete, the CMAR shall submit written notice thereof to the Owner and the Architect and shall include a punch list of all items which remain to be completed or corrected. Failure to include any items on the list does not alter the CMAR's responsibility to complete all the work in accordance with the Contract Documents.

B. Inspections for Substantial Completion may be requested by the CMAR only after the status of completion has been reviewed and assessed by the Owner and the Architect. Upon such review the Owner and/or the Architect will issue a list of any observed deficiencies that affect the issuance of a Certificate of Substantial Completion.

C. If the Owner and the Architect, based on an on-site inspection, agree that the work is substantially complete, the Architect may provide the CMAR with a list of additional corrective items, which shall be added to the CMAR's, and the Owner's punch lists.

D. If the Owner and the Architect, based on an on-site inspection, determine that the work is not substantially complete, the Architect will notify the CMAR in writing, and will provide a list of observed deficiencies. The CMAR shall remedy the deficiencies and submit another written request for Substantial Completion.

E. When the Owner and the Architect determine that the work is substantially complete, the Owner will prepare a Certificate of Substantial Completion, which shall establish the date of Substantial Completion, state the responsibilities of the Owner and the CMAR for maintenance, heat, utilities, and insurance, and fix the time within which the CMAR shall complete the punch list items that are attached to the Certificate of Substantial Completion.

F. The Certificate of Substantial Completion, when signed by the Owner and the CMAR, shall serve to document the CMAR's acceptance of the responsibilities assigned to him in such Certificate.

3.4.3 No payment, nor any use or occupancy of the Project, or any portion thereof, by the Owner, shall constitute acceptance of any work that is not completed in accordance with the Contract Documents, nor shall it relieve the CMAR of full responsibility for correcting defective work or materials found at any time prior to completion of the entire Project or during the warranty period.

3.5 FINAL COMPLETION

3.5.1 When the CMAR considers the work fully completed, CMAR shall submit written notice to the Owner and the Architect confirming all the following:

A. The work has been fully completed in accordance with the Contract Documents and is ready for final inspection.

B. All punch list items have been corrected or completed.

C. All equipment and systems have been tested, adjusted, and balanced and are fully operational.

D. All training required by the Contract Documents has been provided.

E. All operation and maintenance manuals and "as-built" drawings have been submitted to the Architect in accordance with the Contract Documents and have been accepted as being complete.

F. All surety releases required by the Contract Documents have been submitted to the Owner.

3.5.2 The Architect and Owner will perform a final inspection of the work. If the work is found to be incomplete or defective, the CMAR will be notified in writing and provided with a list of observed deficiencies. The Owner may withhold such payment as deemed appropriate to ensure the correction of the deficiencies. Should the CMAR fail to promptly correct the deficiencies noted in the final punch list, the Owner may, upon a seven (7) day written notice to the CMAR, hire another contractor to correct such deficiencies, notify the CMAR's Surety, and/or otherwise complete or correct the listed deficiencies, at the CMAR's expense.

3.5.3 When the work and all requirements of the Contract Documents are fully and satisfactorily completed, the Owner will pay to the CMAR a final payment consisting of the remaining unpaid balance of the Contract Sum due the CMAR. The acceptance of the final payment by the CMAR shall constitute a full and final release and waiver of all CMAR claims and rights of claim against the Owner relating or pertaining to the work.

3.6 WARRANTY REQUIREMENTS

3.6.1 The CMAR and the CMAR's Surety shall unconditionally guarantee all workmanship and materials incorporated in the work to be and remain free of defects for a period of one (1) year from the date of the Certificate of Substantial Completion, or for such longer periods as stipulated in the Contract Documents.

3.6.2 When the work, or a portion thereof, is accepted as being substantially complete, the warranty period will commence on the date of the Certificate of Substantial Completion for the completed portion of the work.

3.6.3 The CMAR shall perform all service and maintenance on any equipment that is operated prior to the date of the Certificate of Substantial Completion. Such service and maintenance shall be performed in accordance with the equipment manufacturer's written instructions, and as required to maintain the equipment warranty.

3.6.4 Within the one (1) year warranty period, and for such longer periods as specified in the Contract Documents, the CMAR shall promptly remedy any defects in the work and pay for any damage to other work resulting therefrom. The Owner shall promptly notify the CMAR in writing of any observed defects. The CMAR shall ensure that the corrective work is commenced within seven (7) days of such notice and completed in an expeditious and timely manner.

3.6.5 The obligations of the CMAR herein shall be in addition to and not in limitation of any obligation imposed by law.

3.6.6 Prior to the end of the one (1) year warranty period (approximately eleven (11) months after the date of the Certificate of Substantial Completion, on a date scheduled by the Owner) the CMAR and all requested Subcontractors shall attend a warranty inspection. The CMAR shall take immediate action to remedy, at no cost to the Owner, all warranty items identified during the warranty inspection.

3.7 LIQUIDATED DAMAGES

3.7.1 It is hereby mutually understood and agreed, by and between the CMAR and the Owner, that the Contract Time, as specified in the Contract, is an essential condition of the Contract. It is further mutually understood and agreed that both the work and the Contract Time shall commence on the starting date established in the Notice to Proceed.

3.7.2 The CMAR agrees that all the work shall be prosecuted regularly, diligently, and without interruption at a rate of progress that will ensure completion of the work within the Contract Time.

3.7.3 If the CMAR shall neglect, fail, or refuse to achieve Substantial Completion of the work within the Contract Time, then the CMAR and the CMAR's Surety do hereby agree, as part of the consideration for the Contract, to pay to the Owner, not as a penalty, but as liquidated damages, the amount of money specified in the Owner-CMAR Construction Contract for each and every excess calendar day that is required to achieve Substantial Completion of the work. The specified liquidated damages shall be the Owner's sole and exclusive remedy for excess calendar days. The CMAR agrees to and hereby waives any defense as to the validity or enforceability of any liquidated damages payable by the CMAR under the Contract on the grounds that such damages are a penalty or that such damages are disproportionate to the actual damages sustained by the Owner.

3.7.4 The CMAR and the Owner mutually agree that in the event of a delay the actual damages to be suffered by the Owner are difficult to determine and accurately quantify. Accordingly, the CMAR, the CMAR's Surety, and the Owner agrees that the amount specified in the Owner-CMAR Construction Contract for liquidated damages is the appropriate and best estimate of the damages that would actually be incurred by the Owner should the work not becompleted within the Contract Time.

3.7.5 Should the remaining balance of the Contract Sum be insufficient to cover the specified liquidated damages due the Owner, then the Owner shall have the right to recover such damages from the CMAR and/or the CMAR's Surety.

3.7.6 Liquidated damages shall cease to be assessed on the date that Substantial Completion is achieved provided the CMAR completes all punch list work within the time limit stipulated in the Certificate of Substantial Completion.

3.8 CLAIMS FOR DAMAGES

3.8.1 Should either party to the Contract suffer injury or damage to person or property because of any act or omission of the other party or of any of that party's employees, agents, or others for whose acts the party is legally liable, claim shall be made in writing by CMAR to Owner within five (5) working days after the first knowledge of such injury or damage and from Owner to CMAR within thirty (30) working days after the first knowledge of such injury or damage.

3.8.2 Any costs to the Owner caused by defective or ill-timed work performed by the CMAR shall be paid by the CMAR.

3.8.3 Except for damages mutually agreed upon by the Owner and the CMAR as liquidated damages in accordance with this section and excluding losses covered by insurance that is required by the Contract or losses incurred due to violations of ARPA related federal procurement laws or timing requirements by CMAR, the Owner and the CMAR agree to mutually waive all claims against each other for any consequential damages suffered or incurred by the other party that arise from or relate to the Contract, including, without limitation, rental expenses or other damages resulting from a loss of use or availability of the work, lost income, lost profit, lost financing or opportunity, lost business or reputation, principle office expenses, and loss of management or employee availability, productivity, opportunity, or services.

3.8.4 The provisions of this section shall also apply to termination of the Contract and shall survive such termination. The CMAR shall require similar waivers in all contracts with the CMAR's Subcontractors and others retained on the Project and that those parties' contracts with lower-tiered contractors likewise contain similar waivers.

3.9 DISPUTE RESOLUTION

3.9.1 Except as provided in this section any controversy or claim arising out of or related to the Contract Documents or the work shall be subject to all provisions of Section 3.9.

A. The provisions of Sections 3.9.1 through 3.9.7 do not apply if the Owner has given notice to the Surety under *Section 3(A)* of the *Performance Bond*. If the Owner discovers construction defects after the warranty period has expired, the Owner has the right to immediately a demand for binding arbitration or alternatively, file a judicial action in any Nevada court of competent jurisdiction. When the CMAR accepts final payment pursuant to Section 8.4, the CMAR waives all rights under this section, including the filing of binding arbitration, and any right to file a judicial action.

3.9.2 Unless otherwise agreed to in writing, the CMAR shall continue the work and maintain the construction schedule of the work during any dispute resolution proceedings. If the CMAR continues to perform in accordance with the Contract Documents, the Owner shall continue to make payments in accordance with the Contract Documents.

3.9.3 The Parties agree that if the Parties encounter any difference or dispute whatsoever relating to the interpretation, validity or performance of this Agreement ("Controversy") the parties agree that every good faith attempt will be made to resolve the controversy within thirty (30) days of an issuance of written notice by either party to the other party, which notice shall include a statement of all material facts, theories, and arguments then known by the complaining party. If a successful resolution of the controversy has not been achieved to the satisfaction of both parties at the end of the thirty (30) day period, the following steps will be followed.

3.9.4 Within thirty (30) days following the above-referenced 30-day period, a party may issue a Notice of Mediation to the other party, and the controversy shall be resolved in accordance with the Mediation Rules of the American Arbitration Association, in effect as of the date of the execution of this Agreement, which are incorporated by reference and shall guide this procedure.

3.9.5 If no resolution has been mutually agreed to through mediation within ninety (90) days of service of a Mediation Notice, then and only then may the controversy be submitted to arbitration, after a finding by the mediator that each party participated in mediation in good faith.

3.9.6 Within thirty (30) days of such finding, the parties agree to in good faith, proceed with binding confidential arbitration using the Commercial Arbitration Rules of the American Arbitration Association in effect as of the date of the execution of this Agreement, which are incorporated by reference and shall guide this procedure.

3.9.7 The Parties consent to jurisdiction and venue for purposes of Alternative Dispute Resolution to be Lyon County, Nevada. Further the parties agree any judgment, award, or decision obtained through this section, may be entered thereon in any state or federal court in the same manner as if the parties were residents of the state or federal district in which said judgment is sought to be entered. All applicable statutes of limitations and defenses based upon the passage of time shall be tolled while the requirements of this Section are being followed.

3.9.8 Notwithstanding the foregoing, nothing in this Agreement shall preclude the parties from seeking temporary or permanent injunctive relief from a court of competent jurisdiction in Lyon County, Nevada.

3.10 CONTRACT TERMINATION BY THE CMAR

3.10.1 The CMAR may, upon seven (7) days written notice, terminate the Contract after the work is stopped for a period of sixty (60) consecutive calendar days through no act or fault of the CMAR and/or their employees or agents, Subcontractor, Sub-Subcontractor, or due to issuance of a court order or other order from a public authority having jurisdiction. If the CMAR terminates the Contract under certain terms specified herein, the CMAR may recover from the Owner payment for work completed and approved, including reasonable overhead, profit, and termination costs. The CMAR will not be entitled to overhead and profit on any unperformed work.

3.11 CONTRACT TERMINATION BY THE OWNER

3.11.1 If any one of the following occurs, then the Owner may, without prejudice to any other right or remedy, and after giving the CMAR and the CMAR's Surety seven (7) days written notice, terminate the employment of the CMAR:

A. The CMAR is adjudged bankrupt; or

B. The CMAR makes a general assignment for the benefit of the CMAR's

creditors; or

C. A receiver is appointed on account of the CMAR's insolvency; or

D. The CMAR persistently or repeatedly refuses or fails to supply an adequate number of properly skilled workmen, proper supervision, or proper materials; or

E. The CMAR fails to make prompt payment to Subcontractors or to materials suppliers for materials or labor; or

F. The CMAR disregards any law, ordinance, rule, regulation, or order of any Public authority having jurisdiction.

G. The CMAR otherwise materially breaches the Contract.

3.11.2 Upon termination by the Owner, the Owner may take possession of the site and of all materials, equipment, tools, and machinery thereon owned by the CMAR and may finish the work utilizing whatever means and methods the Owner deems appropriate.

3.11.2.1 Should the Owner terminate the Contract for any of the aforementioned reasons, the CMAR shall not be entitled to receive any further payment until the entire work is fully complete and the actual amount due the CMAR can be properly determined.

3.11.2.2 If the unpaid balance of the Contract Sum exceeds the costs of finishing the work, including compensation for any additional professional services, such excess shall be paid to the CMAR. If such costs exceed the unpaid balance, the CMAR or the CMAR's Surety shall promptly pay the difference to the Owner.

3.11.3 The Owner expressly reserves the right to terminate the Contract at any time due to a national emergency, court injunction, or for any reason determined to be in the best interest of the Owner, by giving the CMAR and the CMAR's Surety seven (7) days written notice. The CMAR shall be paid for work completed and approved, including reasonable overhead, profit, and termination costs. The CMAR will not be entitled to overhead and profit on any unperformed work.

3.12 SEPARATE CONTRACTS

3.12.1 The Owner reserves the right to award other separate contracts in connection with other portions of the Project.

3.12.2 The CMAR shall afford the Owner's separate contractors reasonable opportunity for the introduction and storage of their materials and equipment and the execution of their work and shall properly interface and coordinate the CMAR's work with theirs.

3.12.3 If any part of the CMAR's work depends on the proper execution of the work of any separate contractor, the CMAR shall inspect and promptly report to the Owner and the Architect in writing any discrepancies or defects in such other work. Failure of the

CMAR to so inspect and report shall constitute an acceptance of the separate contractor's work as fit and proper to receive the CMAR's work, except as to defects which may develop in the other separate contractor's work after the execution of the CMAR's work.

3.12.4 The CMAR shall do all cutting, fitting, and patching of the work that may be required to accommodate and incorporate the work of any separate contractor, as shown upon or as reasonably implied by the Contract Documents. The CMAR shall not endanger or alter the work of any separate contractor.

3.12.5 Should the CMAR cause damage to the work or property of any separate contractor on the Project, the CMAR shall, upon written notice, settle with the separate contractor. If any separate contractor asserts any claim against the Owner on account of any damage alleged to have been sustained, the Owner shall notify the CMAR, who shall indemnify, hold harmless, and defend the Owner against any such claim.

3.12.6 If a dispute arises between the CMAR and a separate contractor as to their responsibility for any costs or damages to the Project, the Owner may assign and charge such costs or damages to the CMAR and/or the separate contractor as the Owner, in the Owner's sole discretion, determines to be appropriate.

3.13 ASSIGNMENT

3.13.1 The CMAR binds itself and each of the CMAR's partners, successors, assigns and legal representatives to the Owner and to the Owner's partners, successors, assigns and legal representatives in respect to all covenants, agreements, and obligations contained in the Contract Documents.

3.13.2 The CMAR shall not assign or sublet the Contract, in whole or in part, without the written consent of the Owner, nor shall the CMAR assign any monies due or to become due to him/her hereunder, without the prior written consent of the Owner.

3.14 SEVERABILITY

3.14.1 The Contract and the various provisions thereof are severable. Should any part, clause, provisions, or terms be declared invalid, ineffective, or unenforceable, the remaining provisions of the Contract shall remain in full legal force and effect.

3.15 INDEMNIFICATION

3.15.1 To the fullest extent permitted by law, the CMAR shall defend, indemnify, and hold harmless the Owner, the Architect, the Architect's consultants, and the agents and employees of any of them from and against all claims, damages, losses, and expenses, including, but not limited to attorneys' fees arising out of or resulting from performance of the work or caused by the negligent acts or omissions of the CMAR, a Subcontractor, anyone directly or indirectly employed by them, or anyone for whose acts they may be liable, regardless of whether such claim, damage, loss, or expense is caused in part by a party indemnified hereunder. Such obligation shall not be construed to negate, abridge, or reduce other rights or obligations of indemnity which would otherwise exist as to a party or person described in this paragraph.

3.15.2 The Owner and the CMAR shall each indemnify the other for any losses principally caused by the indemnifying party.

3.15.3 In any/all claims against the Owner or the Architect or any of their officers, agents, or employees by any employee of the CMAR, any Subcontractor, anyone directly or indirectly employed by any of them, or anyone for whose acts any of them may be liable, the indemnification obligation hereunder shall not be limited in any way by any limitation on the amount or type of damages, compensation, or benefits payable by or for the CMAR or any Subcontractor under Workers' Compensation acts, disability benefit acts, or other employee benefit acts.

3.15.4 Obligations of the CMAR hereunder shall not extend to the liability of the Architect, the Architect's agents or employees arising out of the preparation or approval of maps, drawings, opinions, reports, surveys, change orders, designs or specifications; or the giving of or the failure to give directions or instructions by the Architect, the Architect's agents or employees, provided such giving or failure to give is the primary cause of the injury or damage.

3.15.5 Obligations of the CMAR hereunder shall not be construed to negate, abridge, or reduce other rights or obligations of indemnity which would otherwise exist pertaining to a party or person described herein. This indemnification obligation shall not be diminished or limited in any way by the limits of insurance required in this Contract or otherwise available to the CMAR.

3.15.6 All indemnification obligations of the CMAR shall survive final payment.

3.16 COMPLIANCE WITH NRS SECTION 338.0117

3.16.1 To the extent permitted by applicable law, the CMAR shall comply with all the requirements listed herein for the duration of the Project as attested to by the CMAR in the CMAR's Affidavit of Compliance. The CMAR shall submit a report substantiating the CMAR's successful compliance with each listed requirement prior to submitting the CMAR's final progress payment application:

A. At least fifty percent (50%) of all workers collectively employed by the CMAR, including any of those workers employed by the CMAR's Subcontractors, will hold a valid driver's license or identification card issued by the Nevada Department of Motor Vehicles; and

B. All vehicles used primarily for the Project will be registered and partially apportioned to Nevada pursuant to the International Registration Plan, as adopted by the Department of Motor Vehicles pursuant to NRS Section 706.826; or will be registered in the State of Nevada; and

C. The CMAR and all of the CMAR's Subcontractors will maintain and make available for inspection within this State all payroll records relating to the work and related Project.

3.16.2 In the event that the CMAR cannot meet the requirements of Section 3.16.1, the

CMAR must provide Written Notice to the Owner within seven (7) days of the CMAR's discovery of that fact and include a detailed explanation of why the requirements of Section 3.16.1 cannot be met.

3.16.3 If the CMAR causes a material breach of the Contract as a result of a failure to comply with the requirements of Section 3.16.2 the CMAR is liable to the Owner for a penalty in the amount of one percent (1%) of the Contract Sum.

3.16.4 All contracts between the CMAR and a Subcontractor or supplier, and each contract between a Subcontractor and a Sub-Subcontractor or supplier must provide that:

A. If a party to a contract causes a material breach of the contract between the CMAR and the Owner as a result of a failure to comply with the requirements of this section, the party is liable to the Owner for a penalty in the amount of one percent (1%) of the cost of the largest contract to which it is a party; and

B. The right to recover the amount determined pursuant to this section by the Owner may be enforced by the Owner directly against the party that causes the material breach; and

C. No other party is liable to the Owner for a penalty as set forth this section.

3.17 CMAR BIDDING PROCEDURES & OWNER'S OVERSIGHT

NOTE: All CMAR self-performed proposals/bids shall be received by the Owner from the CMAR no less than twenty-four (24) hours prior to the scheduled Subcontractor bid due date.

3.17.1 The CMAR shall coordinate with, document, and disclose to the Owner all qualification, bidding, and contracting procedures utilized in assessing, negotiating with, and contracting with Subcontractors as required by NRS Sections 338.16991 and 338.16995 and by the Contract Documents.

3.17.2 The CMAR shall coordinate all bid openings with the Owner and the Owner shall attend all bid openings.

3.17.3 Immediately following the opening of Subcontractor proposals/bids, the CMAR shall provide the Owner with a list that shall include at minimum the contact information for the Subcontractor, the associated trade, any exclusions, any stipulations/exceptions, and the bid amount.

3.17.4 The CMAR shall demonstrate to the satisfaction of the Owner that the CMAR has adequate previous experience on any work that the CMAR intends to self-perform and shall also provide evidence that the CMAR's proposed cost for such work is lower than the other bids received for that work.

3.18 CMAR PRE-QUALIFICATION OF SUBCONTRACTORS

3.18.1 Prior to advertisement for Subcontractor qualifications the CMAR shall provide the

Owner with a copy of the Subcontractor pre-qualification application for review and approval.

3.18.2 The CMAR shall pre-qualify all Subcontractors whose scope of work is more than one percent (1%) of the total estimated cost of construction in compliance with all requirements of NRS Sections 338.16991 and 338.16995 and with all provisions under this section.

3.18.3 The CMAR shall pre-qualify at least three (3) Subcontractors for each trade/discipline of work unless the Owner issues written authorization to pre-qualify less than three (3) Subcontractors for a specific scope of work.

3.18.4 When pre-qualifying a Subcontractor the CMAR shall consider and utilize only the criteria listed in NRS Section 338.16991(a-j). Per NRS Section 338.16991(5-7), the Owner shall ensure that each Subcontractor determination has been made per the required criteria.

3.18.5 The CMAR shall notify each applicant and the Owner in writing of a determination made pursuant to the required criteria per NRS Section 338.166991(a-j). Any applicant who is not qualified may be appealed to NRS Section 338.1381 to the Owner with whom the CMAR has entered into a contract for the construction of the work.

3.18.6 All Subcontractors, regardless of the value of their portion of the work, except those that are not required to have a State of Nevada Contractor's license pursuant to NRS 624.031(7) or 624.020(3) (merely furnishes materials or supplies without fabricating them into, or consuming them in the performance of, the work of a contractor, shall have and maintain a State of Nevada Contractor's license in good standing for the entire duration of the work, and must not be disqualified by the State Public Works Division pursuant to NRS Section 338.1376.

3.18.7 The CMAR shall maintain a record of all documents generated and received in connection with the pre-qualification of Subcontractors.

3.19 CMAR REQUEST FOR PROPOSALS/BIDS FROM SUBCONTRACTORS

3.19.1 The CMAR shall provide the Owner with a copy of the CMAR's request for Subcontractor proposals along with all associated documentation reasonably requested by Owner for review prior to issuing the request to Subcontractors.

3.19.2 CMAR is to verify that receiving Subcontractors were pre-qualified for the trade and/or scope of work that the proposal applies and provide said verification to the Owner.

3.19.3 If a *MANDATORY* Pre-Proposal/Bid Meeting was held, the CMAR is to verify that any Subcontractor submitting a proposal/bid attended said meeting.

SECTION 4: THE OWNER

4.1 OWNER'S RESPONSIBILITIES

4.1.1 The Owner, either directly and/or through an Owner's Representative, will provide general administration of the Contract Documents, including performance of the functions described herein. Such general administration shall not relieve the CMAR of complete responsibility for the means and methods of construction and performance of the work in accordance with the Contract Documents.

4.1.2 The Owner shall furnish site surveys describing the topography and physical characteristics, legal limits, and utility locations for the Project site.

4.1.3 Except for securing permits, which is the responsibility of the CMAR under the Contract Documents, the Owner shall pay for all costs associated with plan checking, building permits, easements, utility connection fees for permanent structures, and/or permanent changes in existing facilities.

4.1.4 Information or services under the Owner's control shall be furnished by the Owner within a reasonable time to avoid delays in the orderly progress of the work.

4.1.5 Prior to the start of construction, the Owner shall obtain all land and rights-of-way necessary for the carrying out and completion of the work.

4.1.6 In case of termination of the employment of the Architect, the Owner shall appoint a replacement whose status under the Contract Documents shall be that of the former Architect.

4.1.7 The Owner will issue the Notice to Proceed and Certificate of Substantial Completion.

4.1.8 The preceding items are in addition to other duties, responsibilities, and rights of the Owner enumerated throughout the Contract Documents.

4.2 OWNER'S AUTHORITY

4.2.1 The Owner and the Architect shall always have access to the work. The CMAR shall provide proper equipment and facilities for such access and inspection. If any work is required to be tested or approved, the CMAR shall give the Owner timely notice of the CMAR's readiness for inspection. Neither the observations of the Owner or the Architect in the general administration of the Contract, nor any inspections, tests, or approvals shall relieve the CMAR from the CMAR's obligation to perform the work in accordance with the Contract Documents.

4.2.2 If the Owner or the Architect determine that the CMAR has proceeded with work that does not comply with the Contract Documents, then the CMAR shall be required to correct such work at the expense of the CMAR.

4.2.3 The Owner will not be responsible for the acts or omissions of the CMAR or any Subcontractor, or any of their agents or employees, or any other persons performing any of the work.

4.2.4 If the CMAR defaults or neglects to carry out the work in accordance with the Contract

Documents or fails to perform any provision of the Contract, the Owner may, after seven (7) days written notice to the CMAR, and without prejudice to any other remedy it may have, make good such deficiencies. In such case, an appropriate Change Order shall be issued deducting from the payments then or thereafter due the CMAR the cost of correcting such deficiencies, including the cost of the additional professional services (including attorney's fees) made necessary by such default, neglect, or failure. If the payments then or thereafter due the CMAR are not sufficient to cover such amount, the CMAR shall immediately pay the difference to the Owner.

4.2.5 If the CMAR fails to carry out the work in accordance with the Contract Documents or fails to correct work which is not in accordance with the Contract Documents, the Owner, by written notice, may order the CMAR to stop the work, or any portion thereof, until the cause for such order has been eliminated. The CMAR shall not be entitled to any compensation or to any additional time for such work stoppage.

4.3 INSPECTION BY THE OWNER

4.3.1 The Owner's Construction Project Manager and/or Project Coordinator/Inspector has authority to enforce compliance with the Contract Documents and to direct the CMAR to correct non-complying work. The Architect will render interpretations of the Drawings and Specifications as may be necessary to assist the Construction Project Manager and/or Project Coordinator/Inspector with proper assessment of non-complying work.

4.3.2 The Owner's Construction Project Manager and/or Project Coordinator/Inspector may direct the CMAR to stop any unsafe work, any non-complying work, and/or any work that presents a life-safety concern. The CMAR shall not be entitled to any compensation or to any additional time for such work stoppage.

4.3.3 Once the CMAR is advised of non-complying work, proceeding with that work or with any related work shall be at the CMAR's risk and at the CMAR's expense.

4.3.4 The CMAR shall provide the Owner's Construction Project Manager and/or Project Coordinator/Inspector with a minimum twenty-four (24) hour written notice of all desired inspections required by inspections that are performed by the Owner. The CMAR shall be responsible for scheduling all testing inspections with the professional consultant and/or firm doing any testing work, as well as all inspections required by the Authority Having Jurisdiction (AHJ) for building permit required inspections.

4.3.5 The CMAR will be charged for extra inspection services when any work requiring inspection is performed during time periods other than the proposed and agreed upon schedule provided to the Owner by the CMAR. The charges shall be based on the current rate of pay for the Owner's personnel, including any applicable travel and per diem expenses. Charges for extra inspection services beyond the agreed upon schedule provided to the Owner by the CMAR will be processed as deductive changes to the Contract Sum.

4.3.6 The Owner shall be permitted to inspect the work, materials, payroll records,

personnel records, invoices for materials, and other relevant data of the CMAR and Subcontractors. Such inspection by the Owner shall not be considered a warranty as to the fitness or acceptability of the work, materials, payrolls, records of personnel, invoices for materials and other relevant data and work, and shall not relieve the CMAR or the CMAR's Subcontractors of their obligations or duties required by the Contract Documents.

SECTION 5: THE CONSTRUCTION MANAGER AT RISK (CMAR)

5.1 CMAR'S REVIEW OF CONTRACT

5.1.1 The CMAR shall carefully study and compare all parts of the Contract Documents with each other and with all information furnished by the Owner and shall immediately report any discrepancies, conflicts, or inconsistencies that CMAR discovers in writing to the Owner and the Architect.

5.1.2 The CMAR shall not be liable to the Owner and/or the Architect for any damages resulting from discrepancies, conflicts, or inconsistencies in the Contract Documents unless the CMAR recognized, or should have recognized, such discrepancies, conflicts, or inconsistencies and failed to report them to the Owner and the Architect. No mobilization shall commence, and no work shall be performed until all required insurance certificates have been provided to the Owner.

5.1.2 If the CMAR performs any work knowing that it involves a recognized discrepancy, conflict, or inconsistency in the Contract Documents, without specific notice to the Owner and the Architect, the CMAR shall assume all responsibility for such performance, including but not limited to, any/all costs for correction.

5.1.3 The CMAR shall submit cost proposals, progress schedules, payrolls, reports, estimates, records, and other data as the Owner or Architect may request concerning work self-performed under the Contract.

5.2 CMAR'S RESPONSIBILITIES

5.2.1 The CMAR shall perform and complete the work in a timely and professional manner and in strict conformance with the Contract Documents.

5.2.2 The CMAR shall prepare and submit daily reports to the Owner and the Architect within two (2) days of the reported day. Reports shall include workers on site, work performed, weather conditions, material and equipment deliveries, outstanding issues, and pending RFIs.

5.2.3 The CMAR shall supervise and direct all portions of the work. The CMAR shall be solely responsible for all construction procedures, methods, techniques, sequences, and safety, and for coordinating all portions of the work to comply with the Contract Documents. The CMAR shall be responsible for the acts and omissions of the CMAR's employees and Subcontractors, their agents and employees, and all other persons performing any of the work.

5.2.4 The CMAR and each Subcontractor, except those that are not required to have a State of Nevada Contractor's license pursuant to NRS 624.031(7) or 624.020(3) (merely furnishes materials or supplies without fabricating them into, or consuming them in the performance of, the work of a contractor, shall have and maintain a State of Nevada Contractor's license in good standing for the entire duration of the work.

5.2.5 The CMAR shall at all times enforce good discipline and order among the CMAR's employees and Subcontractors and shall, at the CMAR's own cost, provide the security necessary to adequately protect the work.

5.2.6 The CMAR shall at all times, and at the CMAR's own cost, safely guard and protect the Owner's property, the work, and all property adjacent to the Project, from damage, injury, or loss in connection with the Project and shall replace or make good any such damage, injury, or loss. The CMAR shall be responsible for the protection of adjacent property and the maintenance of passageways, guard fences, and other protective facilities.

5.2.7 The CMAR shall give all notices and shall comply with all laws, ordinances, rules, orders, and regulations of all public authorities, relating to the performance of the work.

5.2.8 In the event of a temporary suspension of the work, and/or during inclement weather, the CMAR shall protect, and shall cause the Subcontractors and Sub- Subcontractors to protect the work and materials against damage, injury, or loss. If any work or materials become damaged, injured, or lost due to any cause within the CMAR's control, such work and materials shall be removed and replaced at the expense of the CMAR.

5.2.9 It shall be the CMAR's responsibility to ensure that all construction loading of the structural decks complies with the metal deck manufacturer's allowable loading criteria. The storage of materials and the use of mechanical lifts or other heavy moveable or stationary equipment utilized on elevated concrete slabs to perform work shall be conducted in a safe manner, so as to not cause any damage or deformation to steel decks or other portions of the structure. The CMAR shall take all necessary precautions, including hiring a structural engineer, when necessary, to evaluate the imposed loadings on elevated slabs from materials, manpower, lifts, and equipment, in order to comply with the deck manufacturer's safe loading criteria and deflection limitations. The CMAR shall be fully responsible for any damage caused to elevated slabs or other portions of the work as a result of construction-imposed loads utilized in performing the work. The CMAR shall include adequate provisions in the CMAR's bid to accommodate any limitations, restrictions, or additional costs that are necessary to meet the deck manufacturer's requirements for the metal deck type, spans, and materials specified in the bid documents. The CMAR shall not be entitled to an increase in the Contract Sum or an extension to the Contract Time for complying with any of the requirements of this section.

5.2.10 The CMAR shall ensure that all ductwork either stored on site or installed at the Project site is thoroughly sealed to protect against dirt and moisture until such time that the Project site/building is deemed, by the Owner, to be adequately clean to allow

for start-up of the associated air handling equipment. Should ductwork not be sealed as specified, then the CMAR shall have such ductwork professionally cleaned to an as-new condition at no cost to the Owner.

5.3 SUPERINTENDENT, ASSISTANTS & EMPLOYEE SUBSTITUTIONS

5.3.1 The CMAR shall employ a competent full-time Superintendent and necessary assistants who shall be in attendance at the Project site throughout the progress of the work. The Superintendent shall represent the CMAR and have full authority to act on the CMAR's behalf.

5.3.2 CMAR firm shall not substitute a different employee for an employee whose resume was submitted during the proposal phase of the Request for Proposal solicitation unless: (A) the employee whose resume was submitted is no longer employed by the CMAR; (B) if the employee is unavailable for medical reasons; (C) or if the Owner entered into a contract with the CMAR for Preconstruction services pursuant to NRS 338.1693 more than ninety (90) days after the date on which the final ranking of application was made pursuant to NRS 338.1696(7).

5.4 LABOR AND MATERIALS & APPRENTICE UTILIZATION ACT OF 2019

5.4.1 Unless otherwise specifically stated in the Contract Documents, the CMAR shall provide and pay for all labor, materials, tools, equipment, water, light, power, heat, transportation, supervision, temporary construction services, procedures, and facilities of every nature required to properly execute and complete the work in accordance with the Contract Documents. All materials shall be installed in strict compliance with the Contract Documents and the recommendations of the manufacturer.

5.4.2 In any case where the manufacturer's installation instructions conflict with the Contract Documents the CMAR shall bring such conflict to the attention of the Owner and the Architect prior to installing the associated materials or equipment, such that the Owner and the Architect may provide direction for an appropriate resolution to the identified conflict. If the CMAR proceed with installing any materials or equipment in a manner contrary to the manufacturer's instructions without first notifying the Owner and the Architect, t h e n the CMAR shall remove and reinstall the materials or equipment in accordance with the manufacturer's instructions at no cost.

5.4.3 The CMAR shall not employ or contract with any firm or organization that is unfit or unskilled in the work to be performed. The CMAR shall not discriminate or allow discrimination against any employee or applicant for employment because of sex, race, color, creed, or national origin. The CMAR shall comply with and shall require the CMAR's Subcontractors to comply with all applicable provisions of NRS Title 28 (Public Works and Planning) and NRS Title 53 (Labor and Industrial Relations) and any and all applicable federal laws and regulations.

5.4.4 The CMAR shall comply strictly with the requirements of NRS Chapter 338 and the Apprentice Utilization Act of 2019 (Act). CMAR shall indemnify, protect, and defend Owner against any alleged violation of the Act by CMAR or any of its lower-tiered

contractors.

A contractor or subcontractor employing a worker as defined in NRS 338.040, shall use one (1) or more apprentices for at least ten percent (10%) of the total hours on vertical construction and three percent (3%) of the total hours for horizontal construction of the total hours of labor worked for each apprenticed craft or type of work to be performed on the public work when more than three (3) employees of each craft are employed at the site of work.

- ***If the construction project is considered a VERTICAL project, then it is subject to ten percent (10%) apprentice utilization.***

A Public Body, upon request of a contractor or subcontractor, may submit a request for a modification or waiver of the percentage of hours of labor of one or more apprentices prior to the bid advertisement; the bid opening; and the award of the contract.

The Labor Commissioner may also grant a waiver from the requirements of Section 1 of this Act after work on the public work has commenced if the public body, contractor, or subcontractor submits documentation and evidence that meets the requirements to establish Good Cause.

Good Cause is defined as:

a. *There are no apprentices available from an apprenticeship program within the jurisdiction where the public work is to be completed as recognized by the State Apprenticeship Council.*

b. *The contractor or subcontractor is required to perform uniquely complex or hazardous tasks on the public work that require the skill and expertise of a greater percentage of journeymen; and*

c. *The contractor or subcontractor has requested apprentices from an apprenticeship program and the request has been denied or the request has not been approved within five (5) business days.*

   The term Good Cause does not include the refusal of a contractor or subcontractor to enter into an apprenticeship agreement.

Workforce Information (to comply with the Act):

a. *Upon request from OWNER, the contractor is required to submit the Comprehensive Contractor/Subcontractor List and Project Workforce Checklist.*

b. *Contractor is required to submit, within ten (10) business days of request for Project Workforce Checklist, all supporting documentation for waiver(s), including, but not limited to, the Request for Apprentice Availability on A Public work form.*

c. *Submit all requested documentation to cmarrfp@cityoffernley.org and identify in the email the construction project to which the documents apply.*

- ***Failure to submit the required documentation within the required timeframe may delay the Notice to Proceed and will not be considered as cause for contract time extension.***

5.4.5 When required by the Contract Documents, the CMAR shall ensure that all employees on the Project are paid in accordance with the Prevailing Wage Rates as published in the Contract Documents and as issued by the State Labor Commissioner for the area or place of the work. The CMAR shall forfeit, by deductive Change Order, the amounts stipulated in NRS Section 338.060, should the CMAR fail to comply with any of the applicable prevailing wage rate requirements.

5.4.6 The CMAR shall ensure that all the CMAR's Subcontractors comply with the reporting requirements of NRS Section 338.070.

5.4.7 All work performed after regular working hours, on weekends or legal holidays, shall be performed without additional expense to the Owner unless previously agreed to otherwise by the Owner.

5.4.8 Unless otherwise specifically required, all materials and equipment incorporated in the work shall be new, free of faults and defects, and shall conform to the Contract Documents. If required, the CMAR shall furnish evidence, satisfactory to the Owner, as to the type and quality of all materials and equipment.

5.4.9 No materials or equipment for the work shall be purchased by the CMAR, nor shall the CMAR permit any Subcontractor to purchase materials or equipment, that are subject to any chattel mortgage or are under a conditional sale contract or other security agreement by which any right, title, or interest is retained by the seller.

5.4.10 All materials and equipment used in the work shall be subject to inspection and testing in accordance with accepted standards to ensure conformity with the requirements of the Contract Documents, laws, ordinances, rules and regulations, or orders of any public authority having jurisdiction. Where specific certificates concerning materials and/or equipment are required, securing payment for the prompt delivery of such certificates shall be the responsibility of the CMAR. Such certificates shall be executed by qualified firms acceptable to the Owner, shall include all information required by the Contract Documents and shall clearly refer specifically to the relevant materials and/or equipment.

5.5 TEMPORARY UTILITIES, HEATING, AND COOLING

5.5.1 The CMAR shall be solely responsible for providing all necessary temporary utilities. The CMAR shall pay all costs related thereto, including, but not limited to, applications, fees, permits, engineering, and any other costs as may be required to

acquire temporary utilities. The Owner will not be responsible for any delays or costs related to obtaining temporary utilities unless otherwise agreed to by Owner.

5.5.2 Temporary utilities may be connected to the Owner's existing metered utilities only with the Owner's and utility company's written authorization. Any connection to the Owner's existing utilities shall be separately metered to allow for proper allocation of utility costs unless another arrangement is specifically agreed to and authorized by the Owner in writing. Temporary meters shall be removed upon completion of the work.

5.5.3 The CMAR shall be solely responsible for providing temporary heating, cooling, and/or ventilation as required to prevent degradation or damage to the work unless otherwise agreed to by Owner. The permanent heating, cooling, and air handling systems shall not be utilized for the purpose of temporary heating, cooling, or ventilation until the Owner approves of such use in writing. In no case shall the permanent heating, cooling, or air handling systems be operated until they are complete, including formal start-up, check-out, and testing and balancing. Utilization of any of the permanent heating, cooling, or air handling systems prior to Substantial Completion shall not impact the specified warranty for such equipment, which shall begin on the date of Substantial Completion.

5.6 EMERGENCIES

5.6.1 In case of an emergency, which threatens loss or damage to property, personal injury, or life safety, the CMAR shall immediately take all feasible actions to prevent or mitigate such loss, damage, injury, or death, without awaiting instructions from the Owner or the Architect. The CMAR shall notify the Owner and the Architect in writing of such emergency at the first feasible opportunity.

5.6.2 The amount of reimbursement claimed by the CMAR on account of any emergency action shall be determined in the manner provided herein for claims.

5.6.3 The CMAR shall maintain a current emergency telephone number list at the job site. The list shall include telephone numbers for the CMAR's Superintendent and for other responsible CMAR representatives that can be contacted after normal working hours in the event of an emergency. This list shall be prominently posted both inside and outside of the CMAR's field office.

5.7 PROGRESS PHOTOGRAPHS

5.7.1 The CMAR shall take not less than twelve progress photographs of the work each month at a minimum resolution of 640 by 480 pixels. The photographs shall be taken with the intent of providing a clear and complete depiction of overall Project progress. Each photograph is to be clearly marked with the time, date, location/view, and other details sufficient to identify the subject.

5.7.2 Camera view/locations shall be coordinated with and approved by the Owner or the Architect.

5.7.3 Progress photos shall be stored on an electronic jump-drive/flash drive and issued to the Owner along with each progress payment application. Other data storage formats will be acceptable to the Owner with prior approval.

5.8 TAXES, PERMITS, FEES, AND NOTICES

5.8.1 The CMAR shall pay all sales, consumer, use, and other taxes required by law.

5.8.2 The CMAR shall secure and pay for all construction-related permits, fees, and licenses necessary for the proper execution and completion of the work, including, but not limited to, dust control permits, storm water mitigation permits, and temporary utility tap fees. Municipal or county plan checking, building permit or permanent utility usage fees will be the responsibility of the Owner.

5.8.3 The CMAR shall give all notices and comply with all laws, ordinances, rules, regulations, and orders of any public authority bearing on the work. If the CMAR discovers that any of the Contract Documents are at variance therewith, he shall immediately notify the Owner and the Architect in writing. If the CMAR performs any work which he knows or should have known to be contrary to such laws, ordinances, rules, and regulations, or orders, without such written notice and written instruction from the Owner or Architect, he shall assume full responsibility therefore and shall bear all costs attributable thereto. Any permit issued shall not warrant continued work in violation of law and once discovered, must be remediated and paid for by Owner.

5.9 PROJECT SIGNS

5.9.1 Within thirty (30) days of the Notice to Proceed, and maintain for the life of the Project, the CMAR shall erect one painted Project identification sign of the design, text, and colors designated by the Architect, measuring 4 feet by 8 feet (4 ′ x 8 ′), in the format directed by the Owner.

5.9.2 This sign shall be the only CMAR sign displayed on the Project site. The sign shall include as a minimum the Project name, the Architect, the CMAR, City of Fernley, and major Subcontractors.

5.10 ACCESS ROADS

5.10.1 The CMAR shall use designated access roads as directed by the Owner, and the CMAR shall always keep these roads passable. The CMAR shall be entirely responsible for any damage to roads, trees, shrubs, gates, fences, grass, curbs, gutters, and driveways due to construction usage. All damaged portions shall be restored by the CMAR, at the CMAR's own cost, to the same condition as existed before the commencement of the work.

5.10.2 Dirt roads shall be periodically sprinkled with water when dust conditions create an onsite or offsite hazard or nuisance to workmen, neighboring properties, or the public in general. The CMAR shall secure and pay for any dust control permits required by State or local jurisdictions.

5.11 CONSTRUCTION SURVEYS

5.11.1 Unless otherwise expressly provided for in the Contract Documents, the CMAR shall furnish and pay for all construction surveys necessary for execution of the work or required by the Contract Documents.

5.12 ARCHAEOLOGICAL FINDINGS

5.12.1 Any historic, prehistoric, archeological evidence, or artifacts discovered on the site shall remain undisturbed and shall be reported immediately to the Owner in writing. Any such findings are the property of the Owner.

5.13 SUBSURFACE CONDITIONS

5.13.1 Should the CMAR encounter subsurface or hidden conditions at the site materially differing from those indicated in the Contract Documents, the CMAR shall immediately give written notice to the Owner and the Architect of such conditions before they are disturbed. The Architect will investigate the conditions, and if found to materially differ, the Architect will, after consultation with the Owner, make such changes in the Contract Documents as deemed necessary. Any increase or decrease in cost resulting from such changes will be adjusted by Change Order.

5.13.2 The CMAR shall perform all work in strict conformance with the current *"Call Before You Dig"* program applicable at the location of the Project.

5.14 PATENTS AND ROYALTIES

5.14.1 To the fullest extent permitted by law, the CMAR shall defend and hold harmless the Owner and the Owner's officers, agents, and employees harmless from liability of any nature or kind, including cost and expenses for, or on account of claimed infringement of any patented or unpatented invention, process, article, or appliance manufactured or used in the performance of the work, including the use of the work by the Owner, unless otherwise specifically stipulated in the Contract Documents.

5.14.2 If the CMAR uses any design, device or materials covered by letters, patent, or copyright, the CMAR shall provide for such use by suitable agreement with the Owner of such patented or copyrighted design, device, or material.

5.14.3 It is mutually agreed and understood, that without exception, the Contract Sum includes all royalties or costs arising from the use of any such design, device, or materials in the work.

5.15 MATERIALS TESTING

5.15.1 Testing of construction materials delivered to the job site shall be carried out by the Owner unless otherwise required in the Contract Documents. The Owner shall select the testing laboratory or inspection agency to carry out this work. The purpose of such

testing is to verify conformity of materials and/or equipment with the Contract Documents. Where tests indicate conformity, costs of testing will be paid by the Owner; where tests indicate non-conformance, costs of re-testing will be paid by the CMAR by deductive Change Order.

5.15.2 If special inspection or testing requirements are established by any of the Contract Documents, performance of and payment for such inspection or testing shall be as specifically stated therein. If the manner of payment is not specified or if there is no mention of such inspection or testing in the Contract Documents, but such inspection is judged necessary by the Owner, then the Owner shall pay the cost thereof. The CMAR shall cooperate toward minimizing the cost of such inspection and testing.

5.15.3 All testing and inspection carried out by the Owner is for the benefit of the Owner and not the CMAR. Lack of performance or failure on the part of any testing laboratory or inspection agency retained by the Owner shall not relieve the CMAR of the CMAR's responsibility to complete the work in accordance with the Contract Documents.

5.16 CORRECTION OF THE WORK

5.16.1 If any work is covered prior to either a specified or a requested inspection, the CMAR shall uncover the work for observation and if found to be defective or non- conforming shall replace the work at no cost to the Owner.

5.16.2 If any work has been covered, which the Owner or the Architect has not specifically requested to observe prior to being covered, the Owner may request to see such work and it shall be uncovered by the CMAR. If the uncovered work is found to be in accordance with the Contract Documents, the cost of uncovering and replacement shall, by appropriate Change Order, be charged to the Owner. If the uncovered work is not in accordance with the Contract Documents, the CMAR shall pay such costs.

5.16.3 The CMAR shall promptly correct all work rejected as defective or as failing to conform to the Contract Documents, whether observed before or after the Certificate of Substantial Completion is issued, and whether or not fabricated, installed, or completed. The CMAR shall bear all costs of correcting such rejected work, including, but not limited to, the cost for additional professional services.

5.16.4 The CMAR shall bear all costs associated with making good all work of separate contractors destroyed or damaged by removal or correction.

5.16.5 If the CMAR does not remove defective or non-conforming work immediately upon written notice, the Owner may remove it and may store the materials or equipment at the expense of the CMAR. If the CMAR does not pay the cost of such removal and storage immediately upon written notice, the Owner may sell such work at auction or at private sale to recover the related costs. If such proceeds do not cover all related costs incurred by the Owner, the difference shall be charged to the CMAR, and an appropriate Change Order shall be issued.

5.16.6 If the CMAR fails to correct defective or non-conforming work, the Owner may correct it at the CMAR's expense.

5.16.7 If the Owner prefers to accept non-conforming work, Owner may do so instead of requiring its removal or correction, in which case an appropriate reduction will be made to the Contract Sum, or, if the amount is determined after final payment, such amount shall be paid to the Owner by the CMAR immediately upon written notice.

5.16.8 All damage or loss to any property caused in whole or in part by the CMAR, any Subcontractor, Sub-Subcontractor, anyone directly or indirectly employed by any of them, or by anyone for whose acts any of them may be liable, shall be remedied by the CMAR, except damage or loss attributable to errors and/or omissions in the Contract Documents.

5.17 SUBCONTRACTORS & SUBSTITUTES

5.17.1 After selecting a subcontractor, the CMAR shall not change Subcontractors without proper justification and without the prior written approval of the Owner.

5.17.2 Should the CMAR decide for any reason to substitute a Subcontractor for work that the CMAR listed to be self-performed, the CMAR shall provide a written explanation of why the Subcontractor was not utilized in the original list and why the substitution is in the best interest of the Owner. The Owner reserves the right to either approve or deny such requests.

5.17.3 If the Owner has a reasonable objection to any Subcontractor, and requests in writing a change in Subcontractors, the CMAR shall submit an acceptable substitute, and the Contract Sum may be increased or decreased by any reasonable costs directly caused by such substitution.

5.17.4 The CMAR shall cause appropriate provisions to be inserted in all subcontracts relative to the work to bind Subcontractors to the CMAR by all Contract Documents. These provisions shall include, but shall not be limited to, the following:

A. Require that the Subcontractor's work be performed in accordance with the requirements of the Contract Documents and be guaranteed for a period of one year after the date of Substantial Completion, or as may be required in the Contract Documents.

B. Require that the Subcontractor's work be performed in accordance with the CMAR's construction schedule to ensure completion within the Contract Time.

C. Require that all claims by the Subcontractor for additional costs or extensions of time with respect to subcontracted portions of the work shall be submitted to the CMAR in the time and manner provided in the Contract Documents for like claims by the CMAR upon the Owner.

5.17.5 The CMAR shall pay each Subcontractor, within ten (10) calendar days after receipt of payment from the Owner, an amount equal to the percentage of completion allowed to the CMAR on account of each Subcontractor's work. The CMAR shall also require that each Subcontractor make similar payments to each Sub-Subcontractor.

5.17.6 The CMAR shall be as fully responsible to the Owner for the acts and omissions of the CMAR's Subcontractors, and of persons either directly or indirectly employed by them, as he is for the acts and omissions of the persons directly employed by him. If, through acts or neglect on the part of the CMAR, any Subcontractor suffers loss or damage, the CMAR agrees to settle with such Subcontractor. If such Subcontractor asserts any claim against the Owner on account of any damage alleged to have been sustained, the Owner shall notify the CMAR, who shall indemnify, hold harmless, and defend the Owner against any such claim.

5.17.7 If the CMAR fails to make appropriate payments to any Subcontractor, Sub-Subcontractor, worker, and/or supplier, then the Owner may pay unpaid bills and/or withhold from the CMAR's unpaid compensation a sum of money deemed reasonably sufficient to reimburse the Owner or pay any/all such claims until satisfactory evidence is furnished that all such liabilities have been fully discharged by the CMAR; however, in no event shall the provisions of this paragraph be construed to impose any obligations upon the Owner to the CMAR, Subcontractors, Sub-Subcontractors, workers, and/or suppliers. In paying any unpaid bills of the CMAR, the Owner shall be deemed the agent of the CMAR, and any payment so made by the Owner, shall be considered as a payment made under the Contract Documents by the Owner to the CMAR, and the Owner shall not be liable to the CMAR for any such payment made in good faith.

5.17.8 The CMAR shall be responsible for the proper distribution of all insurance recoveries resulting from an insured loss under the Contract.

5.17.9 The Owner may furnish to a Subcontractor or supplier, information regarding payments to the CMAR on account of work done by such Subcontractor or supplier, if requested.

5.17.10 Neither the Owner nor the Architect shall have any obligation to pay or to see to the payment of any monies to any Subcontractor, workman, or supplier, except as may otherwise be required by law.

5.17.11 Prior to receiving or accepting any payment, each Subcontractor must have a valid Nevada business license, pursuant to NRS 338.072.

5.18 SAFETY PROGRAM & HOT WORK PERMIT

5.18.1 In order to be eligible to provide labor on the Project, the CMAR must have in existence a Safety Program. This requirement is a reasonable precaution to ensure a safe working environment on construction projects that may involve workers being in relatively close contact with students, staff, and the community.

5.18.2 The CMAR shall be responsible for initiating, maintaining, and supervising all safety precautions and programs in connection with the work.

5.18.3 All work shall be performed in strict accordance with the most current edition of the State of Nevada Occupational Safety and Health Standards.

5.18.4 The CMAR shall take all necessary precautions for the safety of, and shall provide all necessary protection to prevent damage, injury, or loss to:

A. All employees on the Project and all other persons who may be affected thereby.

B. All work, whether in storage on or off the site.

C. All property at the site or adjacent thereto, including trees, shrubs, lawns, walks, pavements, roadways, structures, and utilities.

5.18.5 The CMAR shall comply with all applicable laws, ordinances, rules, and regulations of any public authority having jurisdiction for the safety of persons or property, or to protect them from damage, injury, or loss. The CMAR shall erect and maintain, as required by existing conditions and by the progress of the work, all necessary safeguards for safety and protection, including posting danger signs and other warnings against hazards, promulgating regulations, and notifying Owners and users of adjacent properties.

5.18.6 The CMAR's Project Superintendent, unless otherwise designated in writing by the CMAR to the Owner, shall serve as the responsible member of the CMAR's organization at the site, whose duty shall be supervision and practice of the CMAR's Safety Program (and the prevention of accidents. In any emergency affecting the safety of persons or property, the CMAR shall act, at discretion, to prevent threatened damage, injury, or loss.

5.18.7 The CMAR shall be responsible for the safe operation of all equipment, for utilizing safe construction methods, and for any damage which may result from failure or from improper construction, maintenance, or operation.

5.18.8 The CMAR s hall securely fence, barricade, cover, or otherwise adequately protect all excavations, holes, shafts, or other hazards to guard against danger to persons or animals and shall properly maintain such protection until the completion of the Project.

5.18.9 The CMAR shall immediately notify the Owner, and shall take immediate action to prevent damage, injury, or loss, should any suspected hazardous materials be encountered during the course of work on the Project.

5.18.10 Prior to conducting any hot work (welding, brazing, soldering, cutting, grinding, etc.) in an existing building the CMAR shall complete and submit to the Owner a Hot Work Permit (utilizing the associated form as issued by Factory Mutual or Global Risk Consultants).

5.19 SITE MANAGEMENT & CLEANUP PROCEDURES

5.19.1 The CMAR shall confine operations at the site to areas permitted by law, ordinances, permits, and the Contract Documents, and shall not unreasonably encumber the site. The CMAR shall always keep the site and the work free from accumulation of waste materials and debris resulting from the CMAR's operations.

5.19.2 The CMAR shall obtain any required dust control permit and shall implement a dust control program prior to beginning any activity at the Project site. The CMAR's dust control program shall comply with all applicable state and local requirements. At a minimum, the CMAR shall periodically shower the entire construction site with water as required to prevent blowing dust from becoming a hazard or nuisance to workmen, neighboring properties, or the public.

5.19.3 The CMAR shall develop and implement a stormwater pollution prevention plan complying with the most current version of the federal Environmental Protection Agency Construction General Permit, or with applicable state or local stormwater pollution prevention requirements, whichever is more stringent.

5.19.4 Upon completion of the work the CMAR shall remove all waste materials, debris, tools, construction equipment and machinery, and surplus materials from the Project site. The CMAR shall clean all surfaces and leave the work in a finished, cleaned, washed, waxed, and polished condition. The cleanup requirements are also specifically applicable to all mechanical equipment and to all mechanical equipment rooms.

5.20 ROOFING INSTALLATION AND PROTECTION

5.20.1 No work including staging or access to other portions of the work shall be permitted on the finished membrane.

5.20.2 All roofing work shall commence at the furthest point from the workers' access and progress back towards the access point.

5.20.3 If staging, access, or work is required on the finished membrane, the CMAR shall provide protection along the access path and under the work extending 48 inches beyond the required work area. Protection shall consist of ¾ inch plywood over a heavy canvas tarp with sandbag ballasts as required to prevent the plywood from becoming airborne during strong winds.

5.21 QUALITY ASSURANCE & QUALITY CONTROL PROGRAM

5.21.1 The CMAR shall develop and implement an appropriate Quality Assurance & Quality Control Program for the Project. A detailed description of the program shall be furnished to the Owner and the Architect for review prior to submitting the first progress payment application.

5.22 DRUG AND ALCOHOL POLICY

5.22.1 In order to be eligible to provide labor on the Project, the CMAR must have in existence a Drug and Alcohol Policy. This requirement is a reasonable precaution to ensure a safe and drug-free environment on City construction projects that may involve workers being in relatively close contact with students.

5.22.2 All other contractors who provide labor on CITY projects, regardless of tier, shall have in place a Drug and Alcohol Policy applicable to all workers who will be employed on those projects.

5.22.3 Drug and Alcohol Policies must meet the minimum requirements of the Owner. The CMAR shall demonstrate compliance with this provision by submitting a certification under penalty of perjury that the Drug and Alcohol Policy is in place, that it will be actively enforced, and that all workers who will be employed on the Project will have undergone the pre-placement drug testing required by Owner.

5.22.4 Owner, is empowered to review any/all contractors' records of enforcement of any/all contractors' Drug and Alcohol Policy at any time during the period following award of the resulting contract up to and including completion of the Project in order to determine whether the Drug and Alcohol Policy is in fact being enforced. Any/all contractors shall forthwith deliver to the Owner any/all records requested to determine compliance with the Drug and Alcohol Policy requirement. Failure to maintain or rigorously enforce the Drug and Alcohol Policy or to timely respond to the Owner demands for production of records relating to the Drug and Alcohol Policy may result in termination of the Project contract at no cost to the Owner.

5.23 ENVIRONMENTAL SAFETY REGULATIONS (updated as of December 2020)

MATERIAL DISTURBANCE PERMIT

The building Material Disturbance Permit (MDP) is a City of Fernley (CITY) document that identifies asbestos and lead site specific information, and it is issued by the Environmental, Safety and Assessment (ES&A) Department. A site-specific Material Disturbance Permit is required for each project. Each project and facility require a separate Material Disturbance Permit because each facility has specific information and direction regarding asbestos and lead, as each facility is different in that regard. The Material Disturbance Permit is to be requested by the Project Manager, in accordance with current Material Disturbance Permit requirements. No work can be done by a Contractor for CITY of FERNLEY without an MDP.

WATER SYSTEM DISTURBANCE

Improper closing of valves and other improperly conducted disruptions to City facilities can result in cross connections and back siphoning of chemicals and other contaminates into the water supply. Since these disturbances are very important, Owner has added a water system disturbance section to the Material Disturbance Permit (MDP). work, as a part of this contract, may involve the disturbance of a facilities water distribution system and, as such, the Contractor is required to comply with the Water System Disturbance Permit Appendix section of the Material, Water and Lead Disturbance Permit for any work impacting a facility water system.

The Contractor shall carefully comply with all requirements of the Material, Water and Lead Disturbance Permit, and shall be aware of this process prior to bid preparation and any construction. The permit requirements are hereby made a part of this specification and contract to the same extent as if bound herein and shall apply to all contractors,

Subcontractors, and Sub-Subcontractors.

The Contractor shall be responsible for all costs incurred by Owner, including the consultant, sampling and testing, clean-up, replacement of effected equipment, materials, etc., and any legal action that may result from an unauthorized disturbance of a water system caused by the Contractor, Subcontractors, and Subcontractors resulting in a cross connection or backflow incident.

If Contractors have any questions regarding the requirements of the Water System Disturbance Permit, please call the ES&A Department for the Regulated Systems Compliance and Safety Officers at (775) 325-8491.

INDOOR ENVIRONMENTAL QUALITY

Preventative job site practices will reduce the potential for residual problems with indoor air quality in completed buildings and reduce undue health risks for all workers. The following are the minimum standards required by the CITY for on-site construction in the city.

A. *Existing HVAC System:*
When feasible, the HVAC system for the project area will be shut down for the duration of the project. If occupied spaces will be adversely affected by the shut-down of the system, construction area return registers should be sealed with polyethylene sheeting and secured as an alternative. Registers must be sealed prior to the start of work.

B. *Separating Occupied Spaces from Non-Occupied:*
Keep work areas separate from occupied spaces with polyethylene sheeting (or similar) if there are no other natural barriers in place OR in spaces where air exchange will occur around the barriers.

C. *Ventilation:*
During the installation of carpet, paints, furnishings, and any other VOC emitting products, provide "spot" ventilation during application/installation and for at least 24 hours after the work is completed. In most cases, opening windows and doors will not be enough to effectively exhaust contaminants. It is recommended that an exhaust fan be used to pull polluted air out of the building. This can be accomplished by placing a fan in a window or door and temporarily sealing any opening around the fan with plastic. Additionally, a door or window at the opposite end of the room should be opened to allow fresh, outdoor air to flow across the work area and sweep polluted air out through the exhaust fan. As long as odors are present, the temporary exhaust ventilation must continue to operate. This may include nights and weekends, as necessary. Ventilation should continue for a minimum of 24 hours after the completion of the project or until there are no more noticeable odors.

D. *Construction Dust:*
Minimize the amount of dust in the air and on surfaces. Examples include the use of vacuum assisted drywall sanding equipment and the use of vacuums instead of brooms to clean construction dust from floors.

E. *After Hours Scheduling:*

Schedule high dust generating operations or extreme noise generating activities for after normal working hours. (i.e., saw cutting, jack hammering) and install temporary barriers to confine dust, as necessary.

F. *Gasoline/Diesel Powered Equipment:*
Electric powered equipment must be used in lieu of diesel or gasoline powered equipment. Gas and diesel equipment may not be used inside a CITY building or near an outdoor fresh air building intake.

G. *Material Safety Data Sheets (MSDS):*
MSDS must be made be maintained onsite and made available upon request as required by federal law.

H. *Construction Completion:*
Prior to the occupancy of the building but after the installation of new furniture, carpet, etc., the building should be flushed with 100% outside air for one to three days.

I. *Air Filters:*
Replace all filtration media immediately at the conclusion of the job.

J. *Monitoring Air Quality:*
Indoor air quality monitoring will be conducted randomly throughout the project. Results and any recommendations will be communicated through the building inspector to construction management.

K. *Preconstruction work Area Inspection:*
Any overhead work including roof, the Contractor shall conduct a pre room condition walk through with CITY Project Manager to determine the level of cleanliness that will be expected at completion of project. Contractor shall be responsible for cleaning all exposed surfaces within the facility beneath the work area. At the completion of the project, the Contractor shall clean all exposed surfaces within the facility beneath the aforementioned work area including but not limited to all shelving, duct, lighting, flooring, furniture, etc.

LOCK OUT TAG OUT (LOTO) PROCEDURE

When applicable to the work of the project, the Contractor will be responsible for the isolation and termination of all building systems that may be impacted by the scope of work within this bid. Contractor will coordinate all shut-down processes with the construction manager prior to any shutdowns up to and including Lock Out Tag Out procedures 24 hours prior to any shutdowns. CITY will make the final determination of which systems and location shall be isolated. All Lock Out Tag Out will be performed at main service panel.

5.24 BUILDING INFORMATION MODELING (BIM) REQUIRED FOR NEW BUILDINGS

5.24.1 Building Information Modeling (BIM) is an intelligent 3D model-based process that gives architecture, engineering, and construction professionals the insight and tools to plan more efficiently, design, construct, and manage buildings and infrastructure.

5.24.2 The Level of Development (**LOD**) Specification is a reference that enables

architecture, engineering, and construction professionals to specify and articulate with a high level of clarity the content and reliability of BIMs at various stages in the design and construction process

5.24.3 The LOD for this Project's BIM shall be LOD 300. At the completion of the Project, said model shall be provided to the Owner in full editable and usable format. The Model or Revit file will be provided to the awarded Contractor (except electrical). The Electrical Subcontractor will be required to provide the Subcontractor's own Revit file.

5.24.4 Required for new buildings, the BIM modeling, at a minimum, shall include:

1) all duct work and air handling equipment (ductwork shall show flanges) and model shall show insulation around duct work
2) all mechanical equipment
3) all hangers including Unistrut, clevis, all-thread, and strap material
4) duct fittings including HETO (high efficiency take off) and flex and diffusers/grilles
5) electrical work and controls conduit cumulating 1.5 inches or larger
6) mechanical access zones
7) fire/smoke or fire dampers including access zones.
8) mechanical piping larger than ¾ inch
9) refrigerant lines, no matter the size
10) cable tray
11) electrical equipment
12) all hangers and supports for electrical equipment
13) all light fixtures
14) all power feeds including conduit or bus bars
15) outlets and switches where location is a priority for architectural
16) electrical equipment access zones
17) all occupancy sensors, daylight sensors, exit signs, fire alarm strobes and horns, cameras, speakers, and av equipment located in ceiling grid.
18) natural gas lines larger than ½ inch
19) plumbing lines larger than ½ inch
20) insulation shall be shown with the correct sizing on plumbing lines
21) all plumbing valves and cleanouts
22) access zones to plumbing valves and cleanouts
23) fire protection piping no matter the size
24) fire protection drops
25) fire protection equipment
26) the entire steel structure including beams, columns, supports, braces, bent plate, supports or secondary supports
27) all catwalks and their support systems
28) all concrete and block structures include walls, columns, or beams
29) all access doors in the architectural ceiling for access to all electrical, plumbing, and mechanical systems
30) ceiling grid
31) all walls windows and doors
32) lab hoods
33) soda machine lines

34) kitchen equipment and hoods

SECTION 6: THE ARCHITECT

6.1 ARCHITECT'S RESPONSIBILITIES

6.1.1 The Architect will provide all applicable professional services for the duration of the Project. The Architect is the Owner's representative and will advise and consult with the Owner for the duration of the Project.

6.1.2 The Architect will be the interpreter of the Drawings and Specifications and will render interpretations as may be necessary for proper execution of the work.

6.1.3 The Architect will review and respond to all Requests for Information issued by the CMAR within the time period stipulated in Section 2.3.

6.1.4 The Architect shall always have complete access to the work.

6.1.5 The Architect will make periodic visits to the site to observe the progress and quality of the work and to determine if the work is proceeding in accordance with the Contract Documents.

6.1.6 The Architect will review all shop drawings, samples, and submittals required by the Contract Documents.

6.1.7 The Architect will not be responsible for the acts or omissions of the CMAR and/or their agents or employees, or any Subcontractor, Sub-Subcontractor, or any other persons performing any of the work.

6.1.8 Based upon site observations and the CMAR's progress payment applications, the Architect will review and make recommendations to the Owner, regarding the amounts claimed by the CMAR in each progress payment application.

6.1.9 The Architect will have authority to reject work which does not conform to the Contract Documents.

6.1.10 The Architect will prepare Change Orders and Construction Change Directives for review and approval by the Owner.

6.1.11 The Architect will have authority to order minor changes in the work that do not involve a change in the Contract Sum or the Contract Time.

6.1.12 The Architect shall attend and conduct all scheduled construction progress meetings at the Project site.

6.1.13 The Architect's decisions on matters relating to aesthetics will be final if consistent with the intent expressed in the Contract Documents.

SECTION 7: INSURANCE AND BONDING

7.1 GENERAL REQUIREMENTS OF INSURANCE DOCUMENTATION

7.1.1 Without limiting any of the other obligations or liabilities of the CMAR, the CMAR shall, at the CMAR's sole expense, procure, maintain, and keep in force not less than the following amounts, types, and coverages of insurance conforming to the minimum requirements set forth in this section, unless otherwise agreed to by the Owner in writing.

7.1.1.1 The required insurance coverage shall be procured before any work commences on the Project and shall always be maintained continuously in force. If the CMAR fails to comply with this section, the CMAR shall be considered in default of the Contract, if determined by the Owner.

7.1.2 Without limiting any of the other obligations or liabilities of the CMAR, the CMAR shall, at the CMAR's sole expense, cause each Subcontractor and each Sub-Subcontractor involved with the work of construction under the direction and control of the CMAR for this contract, to procure, maintain and keep continuously in force insurance types and limits to conform to the minimum requirements set forth in this section, unless otherwise agreed to beforehand by the Owner in writing.

7.1.2.1 The required insurance coverage shall be procured before any work commences on the Project and shall always be maintained continuously in force.

7.1.3 Unless specified herein or otherwise agreed to by the Owner, the required insurance policy(s) and required endorsements shall be received and in effect prior to the commencement of work by the CMAR. The certificates for each insurance policy shall be signed by a person authorized by the insured's agent or broker and shall continue in force until the latter of the following conditions:

A. Final acceptance by the Owner of the completed work and acceptance of final payment by the CMAR.

B. At such time that the insurance is no longer required by the Owner under the terms of the Contract Documents.

C. The expiration of any applicable law (including any Statute of Repose), by which any party may bring a claim against Owner.

7.1.4 As evidence of compliance with the insurance required in the section, the CMAR shall furnish the Owner with all certificates of insurance liability coverage (using an Acord Form 25 or equivalent form approved by the Owner) prior to the award of the contract. The CMAR shall maintain original copies of Subcontractor insurance certificates for the duration of the Project and through the warranty period. Such records shall be furnished to the Owner upon request. The certificates for each insurance policy shall be signed by a person authorized by the insured's agent or broker.

7.1.5 The Owner reserves the right to require and obtain complete, certified copies of any insurance policies required by the Contract Documents at any time. Complete copies of policies shall be furnished by the CMAR and by any Subcontractor or Sub-

Subcontractor within thirty (30) days after a written request is issued by the Owner. In lieu of a required certificate of insurance the CMAR may furnish an original binder signed by an authorized representative of the Insurer(s) for a maximum of sixty (60) days from the date of inception of the associated policy(s). Said certificates of insurance or original binder must include the Additional Insured Endorsement as required in this section.

7.1.6 Except as provided below, coverages shall not be suspended, cancelled, non-renewed or reduced in coverage or in limits by either the CMAR or by the CMAR's Insurer, without written notice by email to: cmarrfp@cityoffernley.org (preferred), or at a minimum via U.S. Mail of said suspension, cancellation, non-renewal, or reduction in coverage, or in limits by the CMAR or the Insurer given no less than thirty (30) days. The Contractor's insurance certificates shall include endorsement(s) stating that thirty (30) days' prior written notice will be given by the Insurer to the certificate holder if cancellation is to be before the expiration date set forth in thecertificate.

7.1.7 Cancellation by the Insurer for non-payment of premium requires that the Insurer give the CMAR a notice of cancellation ten (10) calendar days before the effective date of the cancellation and the CMAR shall notify Owner immediately upon receipt of the notice.

7.1.8 CMAR's Insurers or Surety Company(s) shall have and maintain throughout the period for which coverage is required, an A.M. Best Company Rating of A- or better and an A.M. Best Company Financial Size Category of X or better, unless specifically waived or adjusted by the Owner.

7.1.9 Insurers or Surety Company(s) providing the insurance or providing the bonds required by this Contract must be either:

A. Authorized by certificates of authority issued by the Department of Insurance of the State of Nevada; or

B. With respect only to Workers' Compensation, be authorized as a Self-Insured under NRS Section 616.291.

7.1.10 The insurance provided by the CMAR and the CMAR's Subcontractors pursuant to this Contract shall apply on a primary basis and any other insurance or self-insurance maintained by the Owner shall be in excess of and not contributing to the insurance provided by or on behalf of the CMAR. Coverage maintained by the CMAR or the CMAR's Subcontractors shall apply first, before any other insurance, on a primary basis, and without application of a deductible or self-insured retention unless otherwise specifically agreed to by the Owner. Such approval shall not relieve the CMAR from payment of any deductible or self-insured retention owed on CMAR's insurance.

7.1.11 The Owner and the Architect shall be named as Additional Insured on all insurance provided by the CMAR and the CMAR's Subcontractors as required in this section (except for Workers Compensation). The Workers Compensation Insurance shall provide a Waiver of Subrogation endorsement as required in this section. The CMAR shall comply with all warranties required by the Insurer. Any deductible shall be the responsibility of the CMAR.

7.1.12 Failure to maintain the required insurance or surety requirements may result in termination of this contract at Owner's option. If CMAR or its Subcontractors fails to maintain insurance as set forth herein, Owner shall have the right, but not the obligation, to purchase said insurance or bond at the CMAR's and/or Subcontractor's expense.

7.1.13 By requiring insurance herein, Owner does not represent that coverage and limits will necessarily be adequate to protect Owner and such coverage and limits shall not be deemed as a limitation on CMAR's or Subcontractor's liability under the indemnities granted to Owner in this contract.

7.2 COMMERCIAL GENERAL LIABILITY INSURANCE

7.2.1 The CMAR shall carry and maintain a Commercial General Liability (CGL) Insurance and, if necessary, a Commercial Umbrella Liability Insurance, provided on a form at least as broad as the Insurance Service Office (ISO) CG 00 01 12 07 and/or CG 00 01 04 13 occurrence forms and shall cover all operations, activities and exposures of the CMAR including, but not limited to, the following:

A. Premises and Operations Liability.

B. Products and Completed Operations Liability.

C. Personal and Advertising Injury.

D. Contractual Liability safeguarding the obligations assumed by the CMAR in the Contract Documents.

E. Liability which the CMAR may incur as a result of the operations, acts, or omissions of the CMAR's Subcontractors, independent contractors, suppliers, their agents, or employees.

F. "Claims Made" or "Modified Occurrence" coverage forms may not be used and are not acceptable (except for Professional Liability Insurance).

G. Defense costs and expenses shall not reduce the limits of insurance and shall not apply within any aggregate limit of insurance unless approved by the Owner.

7.2.2 The CMAR's CGL coverage shall be $2,000,000 per occurrence and $4,000,000 in both the General Aggregate and Products/Completed Operations Aggregate or the amount customarily carried by CMAR, whichever is greater, combined single limit per occurrence for bodily injury, personal injury and property damage.

7.2.2.1 The required limits of CGL coverage for Subcontractors shall be a minimum of $2,000,000, or the amount customarily carried by the Subcontractor, whichever is greater, per occurrence for bodily injury, personal injury, and property damage. If the CMAR fails to comply with this section, the CMAR shall be

considered to be in default of the Contract if determined by the Owner.

7.2.3 The General Aggregate must be on a "per project" basis. CGL coverage shall specifically apply to the acts and/or omissions of CMAR and the Subcontractors. **The CGL coverage shall be maintained in full force and effect for five (5) years from the date of completion of the project and shall solely apply to this Project.**

- Products/Completed Operations Aggregate $4,000,000
- Personal and Advertising Injury $4,000,000
- Each Occurrence $2,000,000
- Excess/Umbrella Policy $10,000,000
- Fire Damage (Any One Fire) NIL *(Latin for "nothing")*
- Medical Expense (Any One Person) NIL *(Latin for "nothing")*

7.2.4 The Owner's Project's Number, Project Name, and the Project's location shall be noted on each certificate of insurance. An additional certificate evidencing continuation of Commercial General Liability (CGL) insurance for completed operations shall be submitted with the final payment and thereafter upon renewal or replacement of such coverage until the expiration of the time required by the Owner under the terms of the Contract. Upon Owner's written request information concerning reduction of coverage on account of revised limits or claims paid under the General Aggregate, or both, shall be furnished by the CMAR with reasonable promptness.

7.2.5 The CMAR shall maintain per project coverage with separate limits of coverage applicable only to the work performed under that project's Contract. The minimum limits to be maintained by the CMAR (inclusive of any amounts provided by an Umbrella or other excess policy) shall be those that would be provided with the attachment of ISO Endorsement Amendment of Limits of Insurance (Designated Project or Premises) to a CGL insurance with the minimum amounts stated in this section. The CMAR shall continue to maintain the required coverage (inclusive of any amounts provided by an Umbrella or excess policy) along with Products/Completed Operations coverage, without restrictive endorsements unless approved by the Owner, for the applicable statute of repose per NRS 11.202, 11.203, 11.204, 11.205, and 11.2055, or any applicable law as required under the Contract. Continuing CGL insurance shall be written on ISO occurrence form CG 00 01 12 07 or CG 00 01 04 13 (or a substitute form providing equivalent coverage) and shall, at minimum, cover liability arising from products-completed operations and liability assumed under an insured contract. Continuing CGL insurance shall have a Products-Completed Operation Aggregate of at least twice (2x) the amount each occurrence limit.

7.2.6 Additional Insured status and coverage to Owner, Owner's officials, officers, and employees shall be included in accordance with an endorsement attached to the insurance and under the commercial Umbrella, if, providing coverage at least as broad as the combination of forms, which include the unmodified ISO CG 20 10 07 04 and the ISO CG 20 37 10 01 endorsements.

7.2.7 The endorsement shall name and list Owner, Owner's officials, officers, and

employees as Additional Insureds under the CGL and shall apply until the applicable state statute of repose has expired for potential defective workmanship.

7.2.8 This Additional Insured coverage shall apply on a primary basis and be "non-contributory" with respect to any other valid and applicable insurance, self-insurance or deductible afforded to Owner.

7.2.9 The status of Owner as an insured under a CGL obtained in compliance with this Contract Documents shall not restrict coverage under such CGL with respect to the escape of release of pollutants at or from a site owned or occupied by or rented or loaned to Owner.

7.2.10 There shall be no endorsement or modification of the CGL limiting the scope of coverage for liability arising from pollution, explosion, collapse, underground property damage, or damage to the named insured's work.

7.3 COMMERCIAL AUTO LIABILITY INSURANCE

7.3.1 The CMAR's Commercial Automobile Liability (CAL) Insurance coverage shall be $1,000,000 minimum or the amount customarily carried by the CMAR, whichever is greater, combined single limit per accident for bodily injury and property damage. No aggregate limits may apply. Non-owned and hired automobile liability must be included in the policy.

7.3.2 The CMAR's CAL shall cover the CMAR's liability arising out of any auto and be written on any of the unmodified forms at least as broad as the (ISO CA 0001, CA 00 055, CA 00 12, CA 00 20). The form shall include coverage for any owned, non-owned, and hired autos used by the CMAR, its Subcontractors (if not separately insured), its employees, agents, or representatives. If necessary, the policy shall be endorsed to provide contractual liability coverage equivalent to that provided in the 1990 and later editions of CA 00 01.

7.3.3 CMAR waives all rights against Owner and its agents, officers, directors, and employees for recovery of damages to the extent these damages are covered by the business CAL or Commercial Umbrella Liability Insurance obtained by CMAR pursuant to the Contract Documents.

7.4 WORKERS' COMPENSATION & EMPLOYER'S LIABILITY INSURANCE

7.4.1 The CMAR shall obtain statutory limits of Workers' Compensation and Employer's Liability Insurance for employees engaged on or at the site of the project in accordance with Chapters 616A to 616D, inclusive, and 617 of NRS.

7.4.2 Employers Liability Insurance must be maintained in a minimum amount of $1,000,000 in limits. If an excess policy is utilized, the policy will provide excess coverage for Employer's Liability Insurance.

7.4.3 The CMAR's Workers' Compensation Insurance shall comply with all statutory requirements of the State of Nevada. The CMAR's insurance or authorized self-insurance shall cover the CMAR, and to the extent not otherwise insured, the CMAR's Subcontractors of every tier for those sources of liability that would be covered by the

standard Workers' Compensation Insurance as prescribed in NRS Chapter 616 and Employers Liability coverage without restrictive endorsements. Each Workers' Compensation insurance shall provide a Waiver of Subrogation endorsement against the Owner. In addition, where appropriate, coverage shall be included for any other applicable federal or state law, including but not limited to, the Longshore and Harbor Workers Compensation Act, Maritime including Jones Act, and Federal Employers Liability Act.

7.4.4 Subject to the restrictions of coverage found in the Nevada Industrial Insurance Act (NRS Chapter 616), there shall be no maximum limit on the amount of coverage for liability imposed by the Nevada Industrial Insurance Act, the Longshore and Harbor Workers Compensation Act, or any other coverage customarily insured under Part One of a standard Workers Compensation Insurance. The minimum amount of coverage for those coverages insured under Part Two of the Standard Workers' Compensation Insurance (inclusive of any amounts provided by an Umbrella or excess policy) shall be those amounts stated under in this section. If self-insured, such insurance must be provided to and approved by Owner.

7.5 PROPERTY, BUILDERS RISK, INSTALLATION FLOATER, AND BOILER & MACHINERY INSURANCE

7.5.1 Property Insurance shall be on an ALL RISK or equivalent policy form and shall include, without limitation, insurance against the perils of fire (with extended coverage) and physical loss or damage including, without duplication of coverage, theft, vandalism, malicious mischief, collapse, earthquake, flood, windstorm, false work, testing and startup, temporary buildings and debris removal including demolition occasioned by enforcement of any applicable legal requirements, and shall cover reasonable compensation for Architect's and Contractor's services and expenses required as a result of such insured loss. The Owner reserves the right to require the CMAR to provide other forms of Property Insurance if determined by the Owner.

7.5.2 Property Insurance shall cover the entire work of the Project, identified in the Contract Documents including reasonable compensation for Architect's services and expenses made necessary by an insured loss. Insured property shall include portions of the work located away from the site, but intended for use at the site, and shall also cover portions of the work in transit. If the Contract includes both construction of or additions to buildings or structures and the installation of machinery or equipment, Builders Risk Insurance shall include coverage during transit, interim off-site storage, and during post-installation testing. If the Contract is solely for the purpose of installation of machinery or equipment in existing buildings or structures, the CMAR shall provide an All-Risk Installation Floater including coverage during transit, interim off-site storage, and during post-installation testing.

7.5.3 For Builders Risk Insurance the amount of insurance is to be one hundred percent (100%) replacement cost plus an additional fifteen (15%) for debris removal of the completed value including foundations of the entire addition(s), building(s) or structure(s). In the event that such Builders Risk Insurance includes debris removal in excess of the policy limit, the limit shall not require the additional amount for debris removal. In the case of a remodel or renovation project, the policy limit shall be the

greater of the project amount or $500,000. The extra expense sublimit shall be the greatest of twenty percent (20%) of the policy limit or $1,000,000.

7.5.4 The amount of insurance for an All-Risk Installation Floater shall be one hundred percent (100%) of the installed replacement cost value, and valuation shall be replacement cost.

7.5.5 The Builders Risk Insurance and/or the All-Risk Installation Floater must not be subject to any limitation or exclusion of coverage because of occupancy of the building(s), addition(s) or structure(s) in the course of construction or the putting to use of the machinery or equipment. The policy must be endorsed to provide that, subject to the notice of cancellation requirement, coverage will continue to apply until the Certificate of Substantial Completion is issued by the Owner for the building(s), building addition(s) or structure(s), or the machinery or equipment.

7.5.6 The CMAR shall maintain and provide a Boiler and Machinery Insurance with replacement cost endorsement with a minimum limit of twenty-five percent (25%) of the bid value unless such project is for the installation of fired equipment wherein the limit shall be one hundred percent (100%) of bid. The CMAR may be released from this responsibility by the Owner through written confirmation. The "connected and ready for use" requirement, underground property exclusion or any similar limitation shall be excluded. Such coverage may be incorporated as part of the Builders Risk Insurance through the elimination of exclusions for mechanical and electrical breakdown as well as the addition of coverage for damage stemming from change in temperature to machinery or equipment.

7.5.7 If applicable, there shall be no exclusion in the Builders Risk Insurance and/or Boiler and Machinery Insurance for any loss caused by or resulting from workmanship, construction, materials, specifications, or design defect. Nor shall there be any other exclusion in the policy which the Owner, in its sole discretion, finds unacceptable.

7.5.8 Owner and CMAR waive all rights against each other and each of their Subcontractors, Sub-Subcontractors, officers, directors, agents, and employees, for recovery for damages caused by fire and other perils to the extent covered by Builders Risk Insurance purchased pursuant to the requirements of this Contract, or any other property insurance applicable to the work. If the Builders Risk Insurance and other property insurance policies purchased as required in this section do not allow the Insured to waive rights of recovery against others prior to loss, CMAR shall cause them to be endorsed with a Waiver of Subrogation as required above.

7.6 PROFESSIONAL LIABILITY & EXTENDED REPORTING INSURANCE

7.6.1 Professional Liability (Errors and Omissions) Insurance shall apply to all activities performed under the Contract in a form acceptable to the Owner.

7.6.2 The CMAR will maintain Professional Liability (Errors and Omissions) Insurance during the term of the Contract Documents and for a period of three (3) years from the date of completion of the construction of the project unless otherwise agreed to by the Owner.

7.6.3 In the event that the CMAR goes out of business during the term of the Contract, or the three (3) year period described above, the CMAR shall purchase at the request and expense of the Owner, if available, Extended Reporting Insurance for claims arising out of the CMAR's negligent acts and/or errors and omissions committed during the term of the Professional Liability Insurance. Professional Liability Insurance coverage shall be $1,000,000 per claim minimum or the amount customarily carried by the CMAR, whichever is greater.

7.7 ELECTRONIC DATA LIABILITY INSURANCE

7.7.1 CMAR shall maintain Electronic Data Liability Insurance if applicable to the Project and insuring against liability arising out of the loss of, loss of use of, corruption of liability access, and/or inability to manipulate electronic data. This coverage shall be maintained with a limit of liability of not less than $1,000,000.

7.8 POLLUTION LIABILITY INSURANCE

7.8.1 Contractor shall maintain in force for the full period of this Contract, unless otherwise approved by the Owner, Pollution Liability Insurance covering losses caused by pollution incidents that relate to the Project and arise from the operations of the Contractor and/or Subcontractors. Insurance shall apply to bodily injury, property damage, including loss of use of damaged property or of property that has not been physically injured, cleanup costs, and defense, including costs and expenses incurred in the investigation, defense, or settlement of claims. The insurance affording these required coverages shall be written in an amount of at least $1,000,000 per claim, with an annual aggregate of at least $2,000,000.

7.8.2 Owner, its officers, and employees shall be included as an Additional Insured. If coverage as required is written on a claims-made basis, the Contractor warrants that any retroactive date applicable to coverage under the policy precedes the effective date of this contract and that continuous coverage will be maintained, or an extended discovery period will be exercised through the Statute of Repose beginning from the time that work under the Contract is completed.

7.8.3 If the Project includes the disposal of any hazardous or nonhazardous materials from the job site, the Contractor must furnish to the Owner evidence of the Pollution Liability Insurance maintained by the Disposal Site Operator for losses arising from the insured facility accepting waste under this Contract. Coverage must be maintained in minimum amounts of $1,000,000 per loss, with an annual aggregate of at least $2,000,000.

7.8.4 Pollution Liability Insurance policy must be equivalent to the ISO pollution liability-broadened coverage for covered autos endorsement (CA 99 48) shall be provided, and the Motor Carrier Act endorsement (MCS 90) shall be attached.

7.9 PERFORMANCE AND PAYMENT BONDS

7.9.1 Per NRS Section 339.025, Performance and Payment Bonds are required for new

construction, repair, or reconstruction of any public building or other public work or public improvement of any contracting body (e.g., CITY/Owner) is awarded to any contractor. Upon award to the contractor, the contractor shall immediately cause to be executed all required Performance and Payment Bonds in a form acceptable to the Owner for one hundred percent (100%) of the Contract Sum. The Performance and Payment Bonds shall be furnished no later than fifteen (15) calendar days after the Contract is awarded.

7.9.2 The Owner reserves the right to require the CMAR to obtain Performance and Payment Bonds of any Subcontractor in the amount of one hundred percent (100%) of the Subcontractor's bid. If said bonds cannot be obtained within sixty (60) calendar days of notification, the Subcontractor shall be replaced at no additional cost to the Owner.

7.9.2.1 The Owner will pay the actual cost of any bond, if required by the Owner of the Subcontractor, not including any overhead and profit.

7.9.3 The Owner will not require the CMAR to increase the Performance and Payment Bonds to accommodate Change Orders. The Owner will not pay additional costs for increased bond fees resulting from Change Orders.

7.9.4 With respect only to the bonds required in this section, the CMAR shall furnish the Owner with properly executed bonds on forms acceptable to the Owner and shall have affixed to each bond a certified copy of a current Power of Attorney of the Attorney-In-Fact who executed the bond on behalf of the surety.

SECTION 8: PAYMENT

NOTE: Division 1, Section 01027 – Application for Payment shall also apply to this section.

8.1 SCHEDULE OF VALUES

8.1.1 Within fourteen (14) calendar days after the issuance of the Notice to Proceed, the CMAR shall submit to the Owner and the Architect a Schedule of Values of the various portions of the work, aggregating to the total Contract Sum, divided to facilitate payments to Subcontractors, prepared in a form acceptable to the Owner, and supported by such data to substantiate its correctness as the Owner may require. The Schedule of Values, when approved by the Owner and the Architect, shall be the basis for each Progress Payment Application.

8.1.2 The Schedule of Values shall be itemized in accordance with the breakdown listed in the CMAR's GMP Proposal specific to the phase of construction the Project will be entering and according to the list of defined components included in this section.

8.2 COST OF WORK

8.2.1 Any portion of the Cost of Work that remains below the GMP when the work is completed belongs TBD to the Owner and TBD to the CMAR. The Cost of the Work includes wages paid for labor in the direct hire of the CMAR in the performance of the work. Labor rates, including fringe benefits, shall be in conformance with the

applicable Prevailing Wage Rates as published by the Nevada State Labor Commission for this Project, including for employees of CMAR performing work covered by Prevailing Wage Rates. Employees of CMAR that are not performing work covered by Prevailing Wage Rates shall be paid in accordance with the applicable rate or schedule of values established for that position.

8.2.2 The Cost of the Work includes the following:

A. Cost of all materials, supplies, and equipment incorporated in the cost of the work, cost of certificates for inspection and testing, transportation, storage, and handling.

B. All payments made by the CMAR to the Subcontractors and suppliers for the cost of the work performed under the Contract.

C. Cost of bonding as stipulated in Section 7 herein.

D. All allowable permits, fees, licenses, and tests.

E. Rental charges for all necessary machinery and equipment, exclusive of hand tools owned by workers, used for the work, whether rented from the CMAR or others.

F. Installation, repair and replacement, dismantling, removal, maintenance, transportation, and delivery costs will be at rates consistent with those prevalent in the area.

G. Sales, use, gross receipts, other taxes, tariffs, and/or duties related to Project for which the CMAR is liable.

8.3 PROGRESS PAYMENT APPLICATIONS

8.3.1 The CMAR shall submit a Progress Payment Application not more than once (1x) each month in the form required by the Owner. Each Progress Payment Application shall be accompanied by a current construction schedule, updated to reflect all change orders, and/or changes in the work.

8.3.2 Each Progress Payment Application shall correctly set forth the value of all work satisfactorily performed to date, less five percent (5%) of that amount as a retained percentage. The Owner may pay the invoiced value, less retention, of materials properly stored on site or in approved, bonded, and insured facilities.

8.3.2.1 In no event will the CMAR be paid more than the listed value of each properly completed portion of the work, less the required retention, until the entire work has been successfully completed.

8.3.3 If payment is requested for materials or equipment not yet incorporated in the work, but delivered and properly stored at the site or at a bonded and insured facility previously approved by the Owner in writing, such payment shall be conditioned upon

the CMAR's submission of documentation, satisfactory to the Owner, as deemed necessary to protect the Owner's interest, including applicable insurance and transportation to the job site. The risk of loss for such materials or equipment shall remain with the CMAR until final completion and acceptance of the work.

8.3.4 The CMAR guarantees that title to all work, materials, and equipment covered by a Progress Payment Application, whether incorporated into the Project or not, has passed to the Owner prior to issuing the Progress Payment Application.

8.3.4.1 Said title shall be free and clear of all liens, claims, security interests, or encumbrances, and that no work, materials, or equipment covered by a Progress Payment Application has been acquired by the CMAR, or by any other person.

8.3.4.2 This matter subject to an agreement under which an interest therein, or an encumbrance thereon is retained by the seller/supplier or otherwise imposed by the CMAR or such other person.

8.3.4.3 This provision shall not be construed to relieve the CMAR of the CMAR's sole responsibility for the care and protection of the work, and to restore all damages thereto, nor shall serve as a waiver of the right of the Owner to require the fulfillment of all terms of the Contract Documents.

8.3.5 Upon receipt of each Progress Payment Application, and within a reasonable time, the Owner and the Architect will either approve the Progress Payment Application, modify the Progress Payment Application for such amount as is determined to be properly due, or reject the Progress Payment Application and notify the CMAR.

8.3.6 The Owner or the Architect may decline to approve any Progress Payment Application, or, because of subsequently discovered evidence or subsequent inspections, may nullify the whole or any part of a Progress Payment Application previously paid to such extent as may be necessary to protect the Owner from loss based on any of, but not limited to, the findings outlined below. When the findings are resolved, payment shall be approved for the associated amount withheld.

A. Defective work not remedied.

B. Claims filed or reasonable evidence indicating the probable filing of claims.

C. Failure of the CMAR to make proper payments to Subcontractors and/or suppliers.

D. Reasonable doubt that the work can be completed for the unpaid balance of the Contract Sum.

E. Damage to a separate contractor, including, but not limited to Subcontractors.

F. Reasonable indication that the work will not be completed within the Contract Time.

G. Unsatisfactory execution of the work by the CMAR.

H. Failure to maintain any insurance required by the Contract Documents.

I. Any other material breach of the Contract Documents.

8.3.7 No payment by the Owner shall constitute an acceptance of any work not in accordance with the Contract Documents, nor shall it relieve the CMAR of full responsibility for correcting defective work or materials found at any time.

8.4 FINAL PAYMENT

8.4.1 When the Owner has received satisfactory evidence that all claims and obligations of the CMAR have been paid, discharged, or waived, the Owner will make final payment to the CMAR of all monies retained on all properly completed and accepted work.

8.4.2 Issuance of final payment shall constitute a waiver of all claims by the Owner except those arising from any of the following:

A. Unsettled claims.

B. Guarantee or warranty issues.

C. Faulty or defective work.

D. Failure of the work to comply with the requirements of the Contract Documents.

E. Latent defects in the work.

F. Violations of laws, rules, or regulation.

G. Indemnification claims.

8.4.3 The acceptance by the CMAR of final payment shall constitute a full and complete release to the Owner of: all claims by, and all liability to, the CMAR for all things done or furnished in connection with the work; and for every act and neglect of the Owner and any others for whom the Owner is or may be responsible relating to or arising out of performance of the work by the CMAR.

8.4.4 No payment, final or otherwise, shall operate to release the CMAR or the CMAR's surety from any obligations under the Contract and/or under the Performance and Payment Bonds.

8.4.5 As a condition of requesting or receiving final payment, the CMAR shall submit all operation and maintenance manuals, guarantees, as-built drawings, surety release, and all other close-out documents as may be applicable under the Contract Documents.

8.5 INTEREST PAYMENTS

8.5.1 Interest will be paid to the CMAR for monies that are retained on satisfactorily completed work, in accordance with NRS Section 338.515.

SECTION 9: GENERAL CONDITIONS OF THE CMAR

NOTE: For additional information, refer to CMAR Fee Proposal Form, Exhibit B, Page 2 of 2.

9.1 ALLOWABLE EXPENSES UNDER GENERAL CONDITIONS OF THE CMAR

9.1.1 The General Conditions of the CMAR include positions/salaries of CMAR's employees when stationed at the field office, in whatever capacity employed, employees engaged on the road expediting the production or transportation of material and equipment, and employees from the principal or branch office performing jobsite functions while located at the principal office. These positions/salaries include, but are not limited to the following identified below; provided however that the Division of Costs Elements Matrix identifies which positions and/or costs are included in fee, general requirements (and costs of the work), general conditions, A/E costs, Owner costs, and direct costs of work:

A. General Superintendent
B. Project Superintendent
C. Assistant Superintendent/Non-Working Foreman
D. Project Manager (full and/or part-time)
E. Senior Project Manager (full and/or part-time)
F. Assistant Project Manager (full and/or part-time)
G. Project Engineer (full and/or part-time)
H. Project Administrator/Coordinator (full and/or part-time)
I. Job Site Clerk
J. Job Site Contract Coordinator (full and/or part-time)
K. Project Estimator/Estimating Support

9.2 The General Conditions of the CMAR also include, but are not limited to the following:

A. Project management; scheduling; equipment and employee costs; general conditions; and shall be itemized and billed based upon the percentage complete of the work.

B. The cost of all employee benefits and taxes including, but not limited to: unemployment compensation; social security; health; welfare; retirement; and other fringe benefits as required by law, labor agreements, or paid under the CMAR's standard personnel policy, insofar as such costs are actually paid to employees of the CMAR who are engaged in the work.

C. The cost, including transportation and maintenance of, all materials, supplies, equipment, temporary facilities, and consumables that are used or consumed in the performance of the work.

D. Sales, use, gross receipts, other taxes, tariffs, and/or duties related to the work for which the CMAR is liable.

E. All costs associated with establishing, equipping, operating, maintaining, and demobilizing the specified field office(s).

F. All costs for reproduction, photographs, fax transmissions, long distance telephone calls, data processing services, postage, express delivery charges, and on-site telephone service at the CMAR's field office.

G. All temporary water, power, and fuel costs necessary for the work.

H. All costs for removal of all generated non-hazardous substances, debris, and waste materials.

I. Costs incurred by the CMAR due to any emergency affecting the safety of persons and/or property of the Project.

J. All costs directly incurred in the performance of the work or in connection with the Project, and not included in the CMAR's Fee, which are reasonably inferable from the Contract Documents as necessary to produce the intended results.

K. Only costs related to the CMAR's Safety Program's consumables. The CMAR Fee includes all other costs related to CMAR's Safety Program.

SECTION 10: CMAR'S FEE

NOTE: For additional information, refer to CMAR Fee Proposal Form, Exhibit B, Page 2 of 2.

10.1 ALLOWABLE EXPENSES UNDER CMAR'S FEE

10.1.1 The CMAR's Fee shall NOT include those expenses related to the General Conditions of the CMAR in Section 9. The CMAR's fee may include the following:

A. Salaries and other mandatory or customary compensation of the CMAR's employees at its principal and branch offices, except employees assigned to the Project at the principal office. These positions/salaries include but are not limited to: Firm Principals; Executives; Project Executives; Firm Management; Project Accountants; Director of Operations.

B. General and administrative expenses of the CMAR's principal and branch offices other than the field office. Specifically excluded are materials and equipment utilized at the jobsite.

C. CMAR's capital expenses, including interest on the CMAR's capital employed for the work.

D. Transportation, travel, and hotel expenses for the CMAR's personnel incurred in connection with the work.

E. Cost for insurances, bonding, profit, and overhead that would impact the total proposed cost related to construction of the Project.

SECTION 01001 – CONSTRUCTION PROCEDURES FOR EXISTING CITY SITES

PART 1 – GENERAL

1.1 DESCRIPTION

A. All work activities under this contract shall be coordinated with the requirements of the City of Fernley's (CITY) Facilities Management Department. CITY shall be contacted prior to any service shutdown and advised when such shutdown shall be commenced. All materials and equipment shall be stored in spaces assigned by CITY. The Contractor will be required to maintain a neat and orderly operation and to limit or keep noise and nuisance to a minimum.

B. CITY reserves the right to remove any person from the property for the safety and security of the facility

1.2 GENERAL REQUIREMENTS FOR WORK INSIDE THE EXISTING PERIMETER AND EXISTING BUILDINGS

A. It is a felony to transport any alcoholic beverages, drugs, weapons or ammunition of any kind on CITY property

B. Any contact or conversation with students is prohibited.

C. Smoking is prohibited on all CITY property.

D. Working hours inside the existing perimeter and existing building will be coordinated with CITY.

E. Storage of materials inside the existing perimeter and buildings will be coordinated with CITY Facilities Management Department.

F. Construction operations shall be confined to the areas permitted under the contract. Areas beyond indicated work areas are not to be disturbed. Conform to site rules and regulations affecting the work.

G. Keep driveways and entrances serving the premises clear and available at all times. Do not use these areas for parking or storage of materials.

H. Passenger cars, trucks and motorized construction equipment, when parked and unattended, shall be locked and the ignition key removed. Do not leave any such vehicle with the motor running.

I. Limitations on site usage, as well as specific requirements that impact site

utilization are indicated on the drawings and any other contract documents. Allocate available space equitably among sub-contractors needing both access and space so as to produce the best overall efficiency. Schedule deliveries to minimize space and time requirements for storage of materials and equipment.

J. All refuse will be removed daily.

PART 2 – PRODUCTS (Not Applicable)

PART 3 – EXECUTION (Not Applicable)

END OF SECTION 01001

SECTION 01010 - SUMMARY OF WORK

PART 1 – GENERAL

1.1 RELATED DOCUMENTS

A. Drawings and general provisions of the Contract, including all contract documents and addendums associated with this project shall apply to this section.

1.2 PROJECT DESCRIPTION

A. Project to entail work as described in scope of work.

B. The project shall consist of all on and off-site improvements, as shown in the contract documents.

1.3 CONTRACTOR USE OF PREMISES

A. General: During the construction period the Contractor shall have full use of the premises (construction area) for construction operations. The Contractor's use of the premises (construction area) is limited only by the Owner's right to perform construction operations with its own forces or to employ separate contractors on portions of project.

B. Keep driveways and entrances serving the premises clear and available to the Owner and the Owner's employees at all times. Do not use these areas for parking or storage of materials. Schedule deliveries to minimize space and time requirements for storage of materials and equipment site.

1.4 OWNER OCCUPANCY

A. Partial Owner Occupancy: The Owner reserves the right to occupy and to place and install equipment in completed areas of the building, prior to substantial completion provided that such occupancy does not interfere with completion of the work. Such placing of equipment and partial occupancy shall not constitute acceptance of the total work.

1.5 OWNER FURNISHED ITEMS

A. The Owner will provide certain pieces of equipment and accessories that are to be installed and connected by the Contractor.

1. The Owner will arrange and pay for delivery of Owner furnished items in accordance with the Contractor's construction schedule and will inspect deliveries for damage.

2. If Owner furnished items are damaged, defective or missing, the Owner will arrange for replacement. The Owner will also arrange for manufacturer's field services and the delivery of manufacturer's warranties and bonds to the Contractor.

3. The Contractor is responsible for designating the delivery dates of Owner furnished items in the Contractor's construction schedule and for receiving, unloading and handling Owner furnished items at the site. The Contractor is responsible for protecting Owner furnished items from damage, including damage from exposure to the elements, and to repair or replace items damaged as a result of the Contractor's operations.

4. Owner furnished and Contractor installed and connected equipment shall be as indicated in the contract documents.

END OF SECTION 01010

SECTION 01015 – SCHEDULE OF DRAWINGS

SECTION 01020 – PERSONNEL SAFETY CHECK APPLICATION (NEW CONSTRUCTION)

PART 1 -GENERAL

1.1 RELATED DOCUMENTS

A. General provisions of the Contract, including General and Supplementary Conditions and other Division 1 Specification Sections, apply to this section.

1.2 SUMMARY

A. This section includes administrative and procedural requirements for submittals required for performance of the work for all entities/individuals including, but not limited to, the following:

1. General Contractor
2. Sub-Contractor
3. Sub-Contractor of Sub-Contractor
4. Quality Control Personnel
5. Special Inspection Personnel
6. Security Personnel
7. Consultant Personnel

B. Administrative Submittals: Refer to other Division 1 sections and other Contract Documents for requirements for administrative submittals.

1.3 SUBMITTAL PROCEDURES

A. Required Submittals

1. Each company, engaged on a project, shall report to the City of Fernley all required certifications for every employee who will be on a City of Fernley site. This includes all personnel whom the Contractor engages for work on the project site as defined in 1.2 (A). This information must be submitted within twenty-one (21) calendar days prior to commencement of work by the Contractor, and any sub-contractor, regardless of tier. Such submittals required include:

a. Certification by Company Regarding Personnel Safety Check Application.

PART 2- PRODUCTS (Not Applicable)

PART 3- EXECUTION (Not Applicable)

CERTIFICATION BY COMPANY REGARDING
PERSONNEL SAFETY CHECK APPLICATION
(NEW CONSTRUCTION)

Owner – Capital Improvement Projects' New Facilities

I certify on behalf of the company/firm named below that adequate background check procedures have been or will be performed for all employees that will work on Owner's project_____ (Project Name) regarding _____ (Company/Firm Name) to determine that their employees meet the qualifications required by the Owner.

With this certification, I confirm that:

- All employees working on a City of Fernley project shall not have been arrested, convicted, pled guilty, or pled nolo contender for any offenses related to:
  - Sexual assault or sexual activities with a minor
  - Child abuse
  - Felony drug possession
  - Felony weapons possession
- All employees working on a City of Fernley project shall not:
  - Have any active Wants/Warrants
  - Is a Registered Sex Offender
  - Is on a Terrorist list.

I understand that the City of Fernley maintains the right to remove any individuals from the project who do not comply with the above requirements.

I certify the information provided on this application is true, complete, and correct to the best of my knowledge and belief and is provided in good faith. I understand that a knowing and willful false statement on this application can be an automatic disqualification.

I hereby release, discharge, exonerate and hold harmless the City of Fernley, its agents and representatives and persons furnishing information from any and all liability arising out of the disseminating and inspection of my records.

_____
Company/Firm Name

_____ _____
Name of Executive Officer Title

_____ _____
Signature Date

SECTION 01027 - APPLICATIONS FOR PAYMENT

PART 1 - GENERAL

1.1 RELATED DOCUMENTS

A. Drawings and general provisions of the Contract, including all bid documents and addendums associated with this project shall apply to this section.

1.2 SUMMARY

A. This section specifies administrative and procedural requirements governing the Contractor's Applications for Payment.

B. Related Sections: The following sections contain requirements that relate to this section.

1. Schedules: The Contractor's Construction Schedule and Submittal Schedule are specified in SECTION 01300 - SUBMITTALS.

1.3 SCHEDULE OF VALUES

A. Coordination: Coordinate preparation of the Schedule of Values with preparation of the Contractor's Construction Schedule.

1. Correlate line items in the Schedule of Values with other required administrative schedules and forms, including:

a. Contractor's Construction Schedule
b. Application for Payment forms, including continuation sheets
c. List of all tier Sub-Contractors
d. List of products
e. List of principal suppliers and fabricators
f. Schedule of Submittals
g. Schedule of Allowances
h. Schedule of Alternates

2. Submit the Schedule of Values to the Architect at the earliest possible date but no later than seven (7) calendar days before the date scheduled for submittal of the initial Application for Payment.

3. Sub-schedules: Where Work is separated into phases requiring separately phased payments, provide sub-schedules showing values correlated with each phase of payment.

B. Format and Content: Use the Project Manual Table of Contents as a guide to establish the format for the Schedule of Values. Provide at least one line item for each Specification Section.

1. Identification: Include the following Project identification on the Schedule of Values:

    a. Project name and location
    b. Name of the Architect
    c. Project Number
    d. Contractor's name and address
    e. Date of submittal

2. Arrange the Schedule of Values in tabular form with separate columns to indicate the following for each item listed:

    a. Related Specification Section or Division
    b. Description of Work
    c. Name of Sub-Contractor
    d. Name of manufacturer or fabricator
    e. Generic Name of supplier
    f. Change Orders (numbers) that affect value
    g. Dollar value

        1. Percentage of Contract Sum to nearest one-hundredth percent, adjusted to total 100 percent.

3. Provide a breakdown of the Contract Sum in sufficient detail to facilitate continued evaluation of Application for Payment and progress reports. Coordinate with the Project Manual Table of Contents. Break principal subcontract amounts down into several line items. Include a line item for Force Accounts and unit price items, as applicable.

4. The total shall equal the Contract Sum.

5. For each part of the work where an Application for Payment may include materials or equipment, purchased or fabricated and stored on or off-site, provide separate line items on the Schedule of Values for cost of those materials.

    a. If the Contractor is requesting payment for materials or equipment that are stored off-site, those materials must be stored in a bonded and insured third party warehouse, and they must be segregated from other stored materials and they shall be identified according to project name, material and/or equipment description, and quantity. These materials must be observed in their stored condition by either the Architect or the Owner's representative prior to approval of the Application for Payment. In lieu of bond for stored materials offsite the contractor/subcontractor may provide an appropriate insurance policy approved by the owner to provide for the full replacement cost coverage for all materials stored. Any coverage for materials or equipment stored off-site shall include Owner as loss payee with respect to its interests. These materials must be observed in their

stored condition by either the Architect or the Owner's representatives prior to approval of the Application for Payment.

6. Temporary facilities and other major cost items that are not direct cost of actual work-in-place shall be shown as separate line items in the Schedule of Values

7. Schedule Updating: Update and resubmit the Schedule of Values prior to the next Application for Payment when Change Orders or Construction Change Directives result in a change in the Contract Sum.

1.4 APPLICATIONS FOR PAYMENT

A. Each Application for Payment shall be consistent with previous applications and payments as certified by the Architect and Owner's representative and paid for by the Owner.

1. The initial Application for Payment, the Application for Payment at time of Substantial Completion, and the final Application for Payment involve additional requirements

2. Each application for payment shall include sufficient documentation to substantiate completed work including but not limited to subcontractor invoicing, all tiers; general conditions cost breakdown, etc.

B. Payment Application Times: The date for each progress payment is as indicated in the Contract. The period covered by each Application for Payment is the period indicated in the Contract.

C. Payment Application Forms: Use Owner's Certificate for Payment form only, which will be the AIA G702 & G703 continuation forms. This form is available in both hard copy format or electronic format.

D. Application Preparation: Complete every entry on the form. The execution of this form shall be by a person authorized to sign legal documents on behalf of the Contractor. The Owner will return incomplete applications without action.

1. Entries shall match data on the Schedule of Values and the Contractor's Construction Schedule. Use updated schedules if revisions were made.

2. Include amounts of Change Orders and Construction Change Directives issued prior to the last day of the construction period covered by the application.

E. Pre-Approval of Application: Percentages of completed work are to be verified by the Owner's Representative and Architect prior to transmittal to the Architect.

1. The payment application review will be managed by Cumming Group, with input and assistance from TSK.

F. Record Drawings and Record Specifications: Prior to transmittal of the Application for Payment, Record Drawings and Record Specifications must be reviewed and approved by the Owner's Representative and Architect.

1. It shall be established at the Pre-Construction meeting the protocols that are acceptable to each party for the review of Record Drawings and Specifications.

G. Transmittal: Submit one (1) signed original copy of each Application for Payment to the Architect by a method ensuring receipt within twenty-four (24) hours. The submitted copy shall be complete, including waivers of lien and similar attachments, when required.

1. Transmit each copy with a transmittal form listing attachments and recording appropriate information related to the application, in a manner acceptable to the Architect.

2. Obtain Owner's Representative's initials as established during the Pre-Construction meeting and in sub-section 1.4, items E & F above.

H. Waivers of Mechanic's Lien: With each Application for Payment, submit conditional waivers of mechanic's lien from every entity who is lawfully entitled to file a mechanic's lien arising out of the Contract and related to the work covered by the payment.

1. Waiver Forms: Submit waivers of lien on forms, and executed in a manner, acceptable to the Owner.

I. Initial Application for Payment: Administrative actions and submittals, that must precede or coincide with submittal of the first Application for Payment, include the following:

1. List of Sub-Contractors (all tiers)

2. List of principal suppliers and fabricators

3. Schedule of Values

4. Contractor's Construction Schedule

5. Schedule of principal products

6. Submittal Schedule

7. List of Contractor's staff assignments
8. List of Contractor's principal consultants

9. Copies of Building Permits

10. Copies of authorizations and licenses from governing authorities for performance of the work

11. Initial Progress Report

12. Report of Pre-Construction meeting

13. Data needed to acquire the Owner's insurance

14. Initial settlement survey and damage report, if required, (existing facility condition)

15. Record Drawings *

16. Record Specifications*

    * Record Drawings and Specifications must be reviewed and approved by the Owner's Representative prior to the Application for Payment.

J. Continuing Application for Payments: Administrative actions and submittals, that must precede or coincide with submittal of the Application for Payment, include the following:

1. Updated Contractor's Construction Schedule

2. Progress report

3. Record Drawings*

4. Record Specifications*

   *Record Drawings and Specifications must be reviewed and approved by the Owner's Representative prior to the Application for Payment.

K. Application for Payment at Substantial Completion: Following issuance of the Certificate of Substantial Completion, submit an Application for Payment.

1. This application shall reflect Certificates of Partial Substantial Completion issued previously for Owner occupancy of designated portions of the work.

2. Administrative actions and submittals that shall precede or coincide with this application include:

   a. Occupancy permits and similar approvals
   b. Changeover information related to Owner's occupancy, use, operation, and maintenance
   c. Final cleaning
   d. Application for reduction of retainage and consent of surety

e. Advice on shifting insurance coverages
f. List of incomplete work, recognized as exceptions to Architect's Certificate of Substantial Completion
g. Record Drawings*
h. Record Specifications*
i. Meter Readings
j. Change of door locks to Owner's access

*Record Drawings and Specifications must be reviewed and approved by the Owner's Representative prior to the Application for Payment.

L. Final Payment Application: Administrative actions and submittals that must precede or coincide with submittal of the final Application for Payment include the following:

1. Completion of project closeout requirements
2. Completion of items specified for completion after Substantial Completion
3. Ensure that unsettled claims will be settled.
4. Ensure that incomplete work is not accepted and will be completed without undue delay
5. Transmittal of required project construction records to the Owner
6. Proof that taxes, fees, and similar obligations were paid
7. Removal of temporary facilities and services
8. Removal of surplus materials, rubbish, and similar elements
9. Certified property survey
10. Warranties (Guarantees) and Maintenance Agreements
11. Test/adjust/balance records
12. Operation and Maintenance Manuals
13. Startup performance reports
14. Final progress photographs.

1.2 Final progress photographs

PART 2 - PRODUCTS (Not Applicable)

PART 3 - EXECUTION (Not Applicable)

END OF SECTION 01027

SECTION 01030 – ALTERNATES

PART 1 – GENERAL

1.01 DESCRIPTION

A. This section includes administrative and procedural requirements for Alternates.

B. This section identifies each Alternate by number and describes the basic changes to be incorporated into the work when each Alternate is made a part of the work by specific provisions in the Agreement between the Owner and Contractor.

C. The contract documents sections referenced within the respective Alternates describe the general requirements for the work under each Alternate.

1.02 DEFINITIONS

A. An Alternate (or Alternate Bid) is an amount stated in the Bid to be added to or deducted from the amount of the Base Bid if the corresponding change in the work, as described in this section, is accepted by the Owner.

B. Refer to the contract documents for further information.

1.03 PROCEDURES

A. Coordinate related work and modify surrounding work as required to integrate the various elements of the Alternates in the complete work. Include as part of each Alternate, miscellaneous devices, accessory objects, and similar items incidental to or required for a complete installation whether or not indicated or specified as part of the Alternate.

B. Immediately following award of the contract, notify in writing parties involved of the status of each Alternate. Indicate if Alternate has been accepted, rejected, or deferred for later consideration. Include a complete description of negotiated modifications to Alternates, if any.

C. Execute accepted Alternates under the same conditions as other work of the Contract.

PART 2 – PRODUCTS (Not Applicable)

PART 3 – EXECUTION

3.01 PREPARATION

A. Base Bid shall include all site work, architectural, structural, mechanical, electrical, food service and all other work as required to render the facility complete and operable except for the Add Alterations as described in this section.

((COMPLETE THE FOLLOWING SCHEDULE AS REQUIRED FOR THE SPECIFIC WORK TO BE INCLUDED AS AN ALTERNATE))

3.02 SCHEDULE OF ALTERNATES

A. ALTERNATE NO. 1

1. General:

B. ALTERNATE NO. 2

1. General:

END OF SECTION 01030

SECTION 01035 - MODIFICATION PROCEDURES

PART 1 – GENERAL

1.1 RELATED DOCUMENTS

A. Drawings and general provisions of the Contract, including all bid documents and addendums associated with this project shall apply to this section.

1.2 SUMMARY

A. This section specifies administrative and procedural requirements for handling and processing contract modifications.

B. Related Sections: The following sections contain requirements that relate to this Section:

1. Division 1 SECTION 01300 – SUBMITTALS for requirements for the Contractor's Construction Schedule.

2. Division 1 SECTION 01027 – APPLICATIONS FOR PAYMENT for administrative procedures governing Applications for Payment.

3. Division 1 SECTION 01631 – SUBSTITUTIONS for administrative procedures for handling requests for substitutions made after award of the Contract.

1.3 MINOR CHANGES IN THE WORK

A. The Architect will issue supplemental instructions authorizing minor changes in the work, not involving adjustment to the contract sum or contract time, as an Architect's Supplemental Instruction.

1.4 CHANGE ORDER PROPOSAL REQUESTS

A. Owner-Initiated Proposal Requests: The Architect will issue a detailed description of proposed changes in the work that will require adjustment to the contract sum or contract time. If necessary, the description will include supplemental or revised drawings and specifications.

1. Proposal requests issued by the Architect are for information only. Do not consider them as an instruction either to stop work in progress or to execute the proposed change.

2. Within fourteen (14) working days of receipt of a proposal request, submit an estimate of cost necessary to execute the change to the Architect for the Owner's review.

a. Include a list of quantities of products required and unit costs, with the total amount of purchases to be made. Where requested, furnish survey data to substantiate quantities.

b. Indicate applicable taxes, delivery charges, equipment rental and amounts of trade discounts.

c. Include a statement indicating the effect the proposed change in the work will have on the contract time.

d. Include all subcontractor and contractor overhead and profit per contract documents.

B. Contractor-Initiated Proposals: When latent or unforeseen conditions require modifications to the Contract, the Contractor may propose changes by submitting a request for a change to the Architect.

1. Include a statement outlining the reasons for the change and the effect of the change on the work. Provide a complete description of the proposed change. Indicate the effect of the proposed change on the contract sum and contract time.

2. Include a list of quantities of products required and unit costs, with the total amount of purchases to be made. Where requested, furnish survey data to substantiate quantities.

3. Indicate applicable taxes, delivery charges, equipment rental, and amounts of trade discounts.

4. Comply with requirements in SECTION 01631 – SUBSTITUTIONS if the proposed change requires substitution of one product or system for a product or system specified.

5. Include a list of all associated cost that would be incurred, including subcontractor and contractor overhead and profit per contract documents.

C. The Contractor shall prepare his response in accordance with the requirements set forth in the General Conditions.

D. Proposal Request Form: Use AIA Document G709-2001 for Change Order Proposal Requests or Change Order Request Form (CP-F107).

1.5 CONSTRUCTION CHANGE DIRECTIVE

A. Construction Change Directive: When the Owner and the Contractor disagree on the terms of a Proposal Request, the Owner and Architect may issue a Construction Change Directive. The Construction Change Directive instructs the Contractor to proceed with a change in the work, for subsequent inclusion

in a Change Order. The Construction Change Directive will be approved upon email confirmation from the Owner.

1. The Construction Change Directive contains a complete description of the change in the work. It also designates the method to be followed to determine change in the contract sum or contract time.

B. Documentation: Maintain detailed records on a time and material basis of work required by the Construction Change Directive.

1. After completion of the change, submit an itemized account and supporting data necessary to substantiate cost and time adjustments to the Contract.

1.6 CHANGE ORDER PROCEDURES

A. Upon the Owner's approval of a Proposal Request, the Architect will issue a Change Order for signatures of the Owner and the Contractor on AIA Form G701-2000/2001 or CITY's Change Order Form (CP-F107).

PART 2 - PRODUCTS (Not Applicable)

PART 3 - EXECUTION (Not Applicable)

END OF SECTION 01035

ARCHITECT / OWNER

SAMPLE PRICE

REQUEST

Date:_____ Price Request #_____

Contractor: _____

Bid/Quote #: _____

Project: _____

Please submit a Price Quotation for the following changes being considered. Quote the change within five (5) calendar days - ADD or DEDUCT - in the Contract Sum and any change in the Contract Time. Also, please state how long the price quoted is effective before job conditions warrant an increase in price. This is NOT authorization to proceed with this work.

REFERENCE: _____

CHANGE: _____

REQUESTED BY: _____

REASON: _____

CONTRACTOR / OWNER

SAMPLE CHANGE ORDER

REQUEST

Date:_____ Price Request #_____

Contractor: _____

Bid/Quote #: _____

Project: _____

Please submit a Price Quotation for the following changes being considered. Quote the change within five (5) calendar days - ADD or DEDUCT - in the Contract Sum and any change in the Contract Time. Also, please state how long the price quoted is effective before job conditions warrant an increase in price. This is NOT authorization to proceed with this work.

REFERENCE: _____

CHANGE: _____

REQUESTED BY: _____

REASON: _____

SAMPLE CLARIFICATION

DATE: _____

TO: _____

FROM: _____

SUBJECT: _____

REFERENCE: _____
_____
_____
_____
_____

CLARIFICATION: _____
_____
_____
_____
_____

THIS INFORMATION IS PROVIDED FOR CLARIFICATION ONLY AND DOES NOT INVOLVE ANY CHANGE IN CONTRACT PRICE OR TIME.

SIGNATURE: _____

TITLE: _____

DATE:_____CLAR. NO.: _____

SAMPLE REQUEST FOR INFORMATIONDATE:

TO: _____

FROM: _____

SUBJECT: _____

REFERENCE:
Specification Section: _____ Paragraph: _____

Drawing Number:_____Details: _____

INFORMATION REQUIRED: _____
_____
_____
_____

SIGNATURE: _____

TITLE: _____

DATE: _____

_____

REPLY TO ABOVE RFI: _____
_____
_____
_____

THIS INFORMATION IS PROVIDED FOR CLARIFICATION ONLY AND DOES NOT INVOLVE ANY CHANGE IN CONTRACT PRICE OR TIME.

SIGNATURE: _____

TITLE: _____

DATE:_____CLAR. NO.: _____

SECTION 01040 – COORDINATION

PART 1 – GENERAL

1.1 RELATED DOCUMENTS

A. Drawings and general provisions of the Contract, including all bid documents and addendums associated with this project shall apply to this section.

1.2 SUMMARY

A. This section includes administrative and supervisory requirements necessary for coordinating construction operations including, but not necessarily limited to, the following:

1. General project coordination procedures

2. Conservation

3. Coordination Drawings

4. Administrative and supervisory personnel

5. Cleaning and protection

B. Related Sections: The following sections contain requirements that relate to this Section:

1. Division 1 Section 01050 – FIELD ENGINEERING specifies procedures for field engineering services, including establishment of benchmarks and control points.

2. Division 1 Section 01200 – PROJECT MEETING for progress meetings, coordination meetings, and pre-installation conferences.

3. Division 1 Section 01300 – SUBMITTALS for preparing and submitting the Contractor's construction schedule.

4. Division 1 Section 01600 – MATERIALS AND EQUIPMENT for coordinating general installation.

5. Division 1 Section 01700 – CONTRACT CLOSEOUT for coordinating contract closeout.

1.3 COORDINATION

A. Coordinate construction operations included in various sections of these Specifications to assure efficient and orderly installation of each part of the work. Coordinate construction operations included under different sections that depend on each other for proper installation, connection, and operation.

1. Schedule construction operations in the sequence required to obtain the best results where installation of one part of the work depends on installation of other components, before or after its own installation.

2. Coordinate installation of different components to assure maximum accessibility for required maintenance, service, and repair.

3. Make provisions to accommodate items scheduled for later installation.

B. Where necessary, prepare memoranda for distribution to each party involved, outlining special procedures required for coordination, include such items as required notices, reports, and attendance at meetings.

1. Prepare similar memoranda for the Owner and separate contractors where coordination of their work is required.

C. Administrative Procedures: Coordinate scheduling and timing of required administrative procedures with other construction activities to avoid conflicts and assure orderly progress of the work. Such administrative activities include, but are not limited to, the following:

1. Preparation of schedules

2. Installation and removal of temporary facilities

3. Delivery and processing of submittals

4. Progress meetings

5. Project closeout activities

D. Conservation: Coordinate construction operations to assure that operations are carried out with consideration given to conservation of energy, water, and materials.

1. Salvage materials and equipment involved in performance of, but not actually incorporated in, the work.

E. Coordinate the installation of all motor starters. General Contractor is responsible for costs associated with supplying and installing all required motor starters.

F. Dimensions: The Structural drawings are to be used in conjunction with the Architectural, Mechanical and Electrical drawings. Primary structural elements are dimensioned on the structural plans and details. Not all secondary dimensions are shown, such as exact door and window locations, wall configurations, slab slopes, depressions, curbs, etc. Coordination of the structure of the dimensions as shown on the drawings and architectural items to be embedded into, or attached to the structure, is the responsibility of the Contractor. Any dimensions discrepancies between the Architectural, Civil Structural, Mechanical and Electrical drawings shall be reported to the Owner's Representative and Architect before proceeding with the work.

G. Intent of Drawings:

1. The work of the Contractor and subcontractor shall conform to the intent of the architectural and coordination drawings as reviewed by the Architect. Drawings are partly diagrammatic and do not intend to show in detail all features of work. The Contractor shall carefully review the work to be performed by other trades, compare related drawings and shall thoroughly understand the building conditions affecting their work.

2. All changes required in the work caused by failure to do so shall be at no expense to the Owner.

H. Interfaces and Right-of-Way:

1. Make proper provisions to avoid interfaces.

2. Where conflicts occur, architectural and structural has right-of-way over mechanical and electrical work; concealed mechanical work has right-of-way over concealed electrical work; exposed electrical fixtures have right-of-way over mechanical fixtures.

3. Submit conflicts which cannot be resolved by right-of-way to the Owner for direction.

4. Submit reflected ceiling coordination plans showing work by all applicable trades for review and approval by the Architect.

I. Masonry Wall Coordination Drawings:

1. Contractor shall be responsible for providing masonry wall coordination drawings for all concrete masonry unit walls. Drawings shall consist of wall elevations drawn to scale at not less than ¼" = 1'0".

2. Wall elevations shall include dimensioned sizes and locations for all door, window and mechanical openings and penetrations, beam and joist bearing pockets, ledger angles, embedded plate connections, and anchor bolts. All miscellaneous steel to be embedded in the masonry unit wall shall be referenced by show drawing mark number or structural detail number.

3. Masonry wall coordination drawings shall be reviewed and approved by interfacing trades prior to submittal to the Architect. Shop drawings for masonry reinforcement shall be an 'overlay' of the masonry wall coordination drawings. Detail, fabricate and place per ACI 315. Reinforcing shop drawings elevations shall show all vertical and horizontal reinforcing layouts; special reinforcement at lintels and jams at doors, windows, mechanical openings and as called out on Structural drawings.

1.4 SUBMITTALS

A. Coordination Drawings: Prepare coordination drawings where careful coordination is needed for installation of products and materials fabricated by separate entities. Prepare coordination drawings where limited space availability necessitates maximum utilization of space of efficient installation of different components.

1. Show the relationship of components shown on separate Shop drawings.

2. Indicate required installation sequences.

3. Comply with requirements contained in Section 01300 - SUBMITTALS.

B. Staff Names: Within 15 days of commencement of construction operations, submit a list of the Contractor's principal staff assignments, including the Superintendent and other personnel in attendance at the project site. Identify individuals and their duties and responsibilities. List their addresses and telephone numbers.

1. Post copies of the list in the Project Meeting Room, the temporary field office and each temporary telephone.

PART 2 – PRODUCTS (Not Applicable)

PART 3 – EXECUTION

3.1 GENERAL COORDINATION PROVISIONS

A. Inspection of Conditions: Require the Installer of each major component to inspect both the substrate and conditions under which work is to be performed. Do not proceed until unsatisfactory conditions have been corrected in an acceptable manner.

B. Coordinate temporary enclosures with required inspections and tests to minimize the necessity of uncovering completed construction for that purpose.

3.2 CLEANING AND PROTECTION

A. Clean and protect construction in progress and adjoining materials in place, during handling and installation. Apply protective covering where required to assure protection from damage or deterioration at Substantial Completion.

B. Clean and provide maintenance on completed construction as frequently as necessary through the remainder of the construction period. Adjust and lubricate operable components to assure operability without damaging effects.

C. Limiting Exposures: Supervise construction operations to assure that no part of the construction completed or in progress, is subject to harmful, dangerous, damaging, or otherwise deleterious exposure during the construction period. Where applicable, such exposures include, but are not limited to, the following:

1. Excessive static or dynamic loading
2. Excessive internal or external pressures
3. Excessively high or low temperatures
4. Thermal shock
5. Excessively high or low humidity
6. Air contamination or pollution
7. Water or ice
8. Solvents
9. Chemicals
10. Light

11. Radiation
12. Puncture
13. Abrasion
14. Heavy traffic
15. Soiling, staining and corrosion
16. Bacteria
17. Rodent and insect infestation
18. Combustion
19. Electrical current
20. High-speed operation
21. Improper lubrication
22. Unusual wear or other misuse
23. Contact between incompatible materials
24. Destructive testing
25. Misalignment
26. Excessive weathering
27. Unprotected storage
28. Improper shipping or handling
29. Theft
30. Vandalism

END OF SECTION 01040

SECTION 01045 - CUTTING AND PATCHING

PART 1 - GENERAL

1.1 RELATED DOCUMENTS

A. Drawings and general provisions of the Contract, including all contract documents and addendums associated with this project shall apply to this section.

1.2 SUMMARY

A. This section includes administrative and procedural requirements for cutting and patching.

B. Related Sections: The following sections contain requirements that relate to this section:

1. Division 1 SECTION 01040 - COORDINATION for procedures for coordinating cutting and patching with other construction activities.

2. Division 2 SELECTIVE DEMOLITION for demolition of selected portions of the building for alterations.

3. Refer to other sections for specific requirements and limitations applicable to cutting and patching individual parts of the work.

a. Requirements of this section apply to mechanical and electrical installations. Refer to Division 15 and 16 sections for other requirements and limitations applicable to cutting and patching mechanical and electrical installations.

1.3 SUBMITTALS

A. Cutting and Patching Proposal: Submit a proposal describing procedures well in advance of the time cutting and patching will be performed if the Owner requires approval of these procedures before proceeding. Request approval to proceed. Include the following information, as applicable, in the proposal:

1. Describe the extent of cutting and patching required. Show how it will be performed and indicate why it cannot be avoided.

2. Describe anticipated results in terms of changes to existing construction. Include changes to structural elements and operating

components as well as changes in the building's appearance and other significant visual elements.

3. List products to be used and firms or entities that will perform work.

4. Indicate dates when cutting and patching will be performed.

5. Utilities: List utilities that cutting and patching procedures will disturb or affect. List utilities that will be relocated and those that will be temporarily out-of-service. Indicate how long service will be disrupted.

6. Approval by the Architect to proceed with cutting and patching does not waive the Architect's right to later require complete removal and replacement of unsatisfactory work.

1.4 QUALITY ASSURANCE

A. Requirements for Structural Work: Do not cut and patch structural elements in a manner that would change their load-carrying capacity or load-deflection ratio.

1. Obtain approval of the cutting and patching proposal before cutting and patching the following structural elements:

a. Foundation construction
b. Bearing and retaining walls
c. Structural steel
d. Lintels
e. Miscellaneous structural metals
f. Piping, ductwork, vessels, and equipment

B. Operational Limitations: Do not cut and patch operating elements or related components in a manner that would result in reducing their capacity to perform as intended. Do not cut and patch operating elements or related components in a manner that would result in increased maintenance or decreased operational life or safety.

1. Obtain approval of the cutting and patching proposal before cutting and patching the following operating elements or safety related systems:

a. Primary operational systems and equipment
b. Air or smoke barriers
c. Water, moisture or vapor barriers
d. Membranes and flashings
e. Fire protection systems
f. Noise and vibration control elements and systems

g. Control systems
h. Communication systems
i. Electrical wiring systems
j. Operating systems of special construction in Division 13 sections

C. Visual Requirements: Do not cut and patch construction exposed on the exterior or in occupied spaces in a manner that would, in the Architect's opinion, reduce the building's aesthetic qualities. Do not cut and patch construction in a manner that would result in visual evidence of cutting and patching. Remove and replace construction cut and patched in a visually unsatisfactory manner.

1. If possible, retain the original installer or fabricator to cut and patch the exposed work. If it is impossible to engage the original installer or fabricator, engage another recognized experienced and specialized firm.

1.5 WARRANTY

A. Existing Warranties: Replace, patch and repair material and surfaces cut or damaged by methods and with materials in such a manner as not to void any warranties, required or existing.

PART 2 - PRODUCTS

2.1 MATERIALS, GENERAL

A. Use materials identical to existing materials. For exposed surfaces, use materials that visually match existing adjacent surfaces to the fullest extent possible if identical materials are unavailable or cannot be used. Use materials whose installed performance will equal or surpass that of existing materials.

PART 3 - EXECUTION

3.1 INSPECTION

A. Examine surfaces to be cut and patched and conditions under which cutting and patching is to be performed before cutting. If unsafe or unsatisfactory conditions are encountered, take corrective action before proceeding.

1. Before proceeding, meet at the Project Site with parties involved in cutting and patching, including mechanical and electrical trades. Review areas of potential interference and conflict. Coordinate procedures and resolve potential conflicts before proceeding.

3.2 PREPARATION

A. Temporary Support: Provide temporary support of work to be cut.

B. Protection: Protect existing construction during cutting and patching to prevent damage. Provide protection from adverse weather conditions for portions of the Project that might be exposed during cutting and patching operations.

C. Avoid interference with use of adjoining areas or interruption of free passage to adjoining areas.

D. Avoid cutting existing pipe, conduit, or ductwork serving the building but scheduled to be removed or relocated until provisions have been made to bypass them.

3.3 PERFORMANCE

A. General: Employ skilled workers to perform cutting and patching. Proceed with cutting and patching at the earliest feasible time and complete without delay.

1. Cut existing construction to provide for installation of other components or performance of other construction activities and the subsequent fitting and patching required to restore surfaces to their original condition.

B. Cutting: Cut existing construction using methods least likely to damage elements retained or adjoining construction. Where possible, review proposed procedures with the original installer; comply with the original installer's recommendations.

1. In general, where cutting, use hand or small power tools designed for sawing or grinding, not hammering and chopping. Cut holes and slots as small as possible, neatly to size required, and with minimum disturbance of adjacent surfaces. Temporarily cover openings when not in use.

2. To avoid marring existing finished surfaces, cut or drill from the exposed or finished side into concealed surfaces.

3. Cut through concrete and masonry using a cutting machine, such as a carborundum saw or a diamond-core drill.
4. Comply with requirements of applicable Division 2 sections where cutting and patching requires excavating and backfilling.

5. Where services are required to be removed, relocated or abandoned, bypass utility services, such as pipe or conduit, before cutting. Cut-off pipe or conduit in walls or partitions to be removed. Cap, valve or plug and seal the remaining portion of pipe or conduit to prevent entrance of moisture or other foreign matter after bypassing and cutting.

C. Patching: Patch with durable seams that are as invisible as possible. Comply with specified tolerances.

1. Where feasible, inspect and test patched areas to demonstrate integrity of the installation.

2. Restore exposed finishes of patched areas and extend finish restoration into retained adjoining construction in a manner that will eliminate evidence of patching and refinishing.

3. Where removing walls or partitions extends one finished area into another, patch and repair floor and wall surfaces in the new space. Provide an even surface of uniform color and appearance. Remove existing floor and wall coverings and replace with new materials, if necessary, to achieve uniform color and appearance.

a. Where patching occurs in a smooth painted surface, extend final paint coat over entire unbroken surface containing the patch after the area has received primer and second coat.

4. Patch, repair or rehang existing ceilings as necessary to provide an even plane surface of uniform appearance.

3.4 CLEANING

A. Clean areas and spaces where cutting and patching are performed. Completely remove paint, mortar, oils, putty and similar items. Thoroughly clean piping, conduit and similar features before applying paint or other finishing materials. Restore damaged pipe covering to its original condition.

END OF SECTION 01045

SECTION 01050 - FIELD ENGINEERING

PART 1 – GENERAL

1.1 RELATED DOCUMENTS

A. Drawings and general provisions of the Contract, including all contract documents and addendums associated with this project shall apply to this section.

1.2 SUMMARY

A. General: This section specifies administrative and procedural requirements for field engineering services including, but not limited to, the following:

1. Land survey work

2. Civil Engineering Services

3. Damage Surveys

4. Geotechnical Monitoring

B. Related Sections: The following sections contain requirements that relate to this section:

1. Division 1 SECTION 01040 – COORDINATION for procedures for coordinating field engineering with other construction activities.

2. Division 1 SECTION 01300 – SUBMITTALS for submitting project record surveys.

3. Division 1 SECTION 01700 – CONTRACT CLOSEOUT for submitting final property survey with Project Record Documents and recording of Owner accepted deviations from indicated lines and levels.

1.3 SUBMITTALS

A. Certificates: Submit a certificate signed by the land surveyor or professional engineer certifying the location and elevation of improvements upon completion of construction.

B. Final Property Survey: Submit ten (10) copies of the final property survey.

C. Project Record Documents: Submit a record of work performed and record survey data as required under provisions of SECTION 01300 – SUBMITTALS and SECTION 01700 – CONTRACT CLOSEOUT.

1.4 QUALITY ASSURANCE

A. Surveyor Qualifications: Engage a land surveyor registered in the State of Nevada, to perform required land surveying services.

B. Engineer Qualifications: Engage an engineer of the discipline required, licensed in the State of Nevada, to perform required engineering services.

PART 2 – PRODUCTS (Not Applicable)

PART 3 – EXECUTION

3.1 EXAMINATION

A. Identification: The Owner will identify existing control points and property line corner stakes.

B. Verify layout information shown on the drawings, in relation to the property survey and existing benchmarks, before proceeding to lay out the work. Locate and protect existing benchmarks and control points. Preserve permanent reference points during construction.

1. Do not change or relocate benchmarks or control points without prior written approval. Promptly report lost or destroyed reference points or requirements to relocate reference points because of necessary changes in grades or locations.

2. Promptly replace lost or destroyed project control points. Base replacements on the original survey control points.

C. Establish and maintain a minimum of two (2) permanent benchmarks on the site, referenced to data established by survey control points.

1. Record benchmark locations, with horizontal and vertical data, on Project Record Documents.

D. Existing Utilities and Equipment: The existence and location of underground and other utilities and construction indicated as existing are not guaranteed. Before beginning site work, investigate and verify the existence and location of underground utilities and other construction.

1. Prior to construction, verify the location and invert elevation at points of connection of all underground utility including but not limited to sanitary sewer, storm sewer, water service piping, electric conduits and gas service piping.

3.2 PERFORMANCE

A. Work from lines and levels established by the property survey. Establish benchmarks and markers to set lines and levels at each stage/story of construction and elsewhere as needed to locate each element of the project. Calculate and measure required dimensions within indicated or recognized tolerances. Do not scale drawings to determine dimensions.

1. Advise entities engaged in construction activities of marked lines and levels provided for their use.

2. As construction proceeds, check every major element for line, level and plumb.

B. Surveyor's Log: Maintain a surveyor's log of control and other survey work. Make this log available for reference.

1. Record deviations from required lines and levels and advise the Architect when deviations that exceed indicated or recognized tolerances are detected. On Project Record Drawings, record deviations that are accepted and not corrected.

2. On completion of foundation walls, major site improvements and other work requiring field engineering services, prepare a certified survey showing dimensions, locations, angles and elevations of construction and site work.

C. Site Improvements: Locate and lay out site improvements, including but not limited to, pavements; stakes for grading; fill and topsoil placement; utility; slopes; invert elevations; etc.

D. Building Lines and Levels: Locate and lay out batter boards for structures, building foundations, column grids and locations, floor levels and control lines and levels required for mechanical and electrical work.

E. Existing Utilities: Furnish information necessary to adjust, move or relocate existing structures, utility poles, lines, services or other appurtenances located in or affected by construction. Coordinate with local Authorities Having Jurisdiction (AHJ).

F. Final Property Survey: Prepare a final property survey showing significant features (real property) for the project. Include on the survey a certification, signed by the Surveyor, that principal metes, bounds, lines and levels of the project are accurately positioned as shown on the survey.

1. Recording: At Substantial Completion, have the final property survey recorded by or with the AHJ as the official Property Survey.

END OF SECTION 01050

SECTION 01110 – PREVAILING WAGE AND APPRENTICESHIP UTILIZATION SPECIFICATION

PART 1 - GENERAL

1.1 RELATED DOCUMENTS

A. Drawings and general provisions of the Contract, including all bid documents, addendums and all Apprenticeship Utilization Act requirements associated with this project shall apply to this section. Various forms and information regarding the Apprenticeship Utilization Act (2019) can be found on the Office of the Labor Commissioner's website: http://labor.nv.gov/Apprenticeship_Utilization_Act/Apprenticeship_Utilization_Act/.

1.2 SUMMARY

A. This section includes administrative and procedural requirements for submittals required for performance of the work, including the following:

1. Contractor/Subcontractor Notification (Section 1.3, Item B, subsections b-d - Apprenticeship Utilization forms)

2. Completion Notification

3. Weekly Wage and Hour Report of Public Works Contractors.

4. Weekly Wage and Hour Report submittal log.

5. Certification of bidder regarding penalties for noncompliance

6. Certification of bidder, proposed contractor or subcontractor regarding debarment, suspension, ineligibility of voluntary exclusion.

B. Related Sections: The following section(s) may contain requirements that relate to this section if included:

1. SECTION - 01027 APPLICATIONS FOR PAYMENT

2. SECTION – 01300 SUBMITTALS

1.3 SUBMITTAL PROCEDURES

A. Compensation:

1. No extension of contract time, overhead, or profit will be

authorized because of failure to transmit any required submittals or payroll report submittals to the Owner sufficiently in advance of progress payment submittals.

2. No extension of contract time will be authorized because of failure to transmit Apprenticeship Utilization Act forms.

B. Required Submittals

1. CONTRACTOR/SUBCONTRACTOR NOTIFICATION

a. The Apparent Low Bidder is requested to submit the information on the Comprehensive Contractor/Subcontractor List for the Prime Bidder, and all named (used) Subcontractors whom they engage for work within two (2) business days after Recommendation of Award, which will be supplied by the Purchasing Department.

b. The Apparent Low Bidder is requested to submit the Project Workforce Checklist form for the Prime Bidder, and all named (used) Subcontractors within two (2) business days after Recommendation of Award, which will be supplied by the Purchasing Department.

c. All supporting documentation including, but not limited to, the Apprenticeship Utilization Act Waiver Request form and Request for Apprentice Availability on a Public Work from and any additional documentation for waiver(s), must be submitted within ten (10) business days after the Recommendation of Award by the City of Fernley. The Apprenticeship Utilization Act Waiver Request form and supporting documentation shall be submitted via email to cmarrfp@cityoffernley.org

d. Changes to the anticipated workforce after start of construction, may have an impact on compliance with the Nevada Apprenticeship Utilization Act of 2019, and will require the submittal of all revised forms within five (5) business days of any change.

2. COMPLETION NOTIFICATION

The contractor shall notify City of Fernley when completion of all work performed under the contract is complete.

3. WEEKLY WAGE AND HOUR REPORTING OF PUBLIC WORKS CONTRACTORS

a. The contractor and all subcontractors are required to

submit Certified Weekly Wage and Hour Reports of Public Work Contractors for each weekly payroll to City of Fernley on the City of Fernley form included in this specification. All forms submitted shall contain a certification similar to that on the back of the Wage Report of the State Labor Commissioner. The first weekly report will begin on the Notice to Proceed date and conclude on the following Saturday. If the Notice to Proceed date falls on a Saturday, the first report will only include reporting for that day. All successive reports will begin with the following Sunday and conclude on the following Saturday. All subcontractor report numbers shall coincide with the General Contractors report numbers. If the contractor or subcontractors do not work during any weekly reporting period, they still must submit a report indicating no public work project hours were performed for that weekly period. When contract scope of work is completed, the last report is to be clearly marked "FINAL REPORT."

b. Weekly Wage and Hour Report of Public Works Contractors and Weekly Wage and Hour Report submittal log must be turned into City of Fernley within fifteen (15) calendar days following the end of the month being reported.

c. The contractor is required to submit the Weekly Wage and Hour Report submittal log on a monthly basis on the form provided in this specification. It must include every report number and Weekly Wage and Hour Report ending date provided by each contractor and subcontractor. If the Weekly Wage and Hour Reports submittal log is not complete and Weekly Wage and Hour Reports of Public Work Contractors for each weekly payroll have not been provided, then the monthly progress payment will not be provided until these submittals are completed, transmitted and approved by City of Fernley.

4. CERTIFICATION OF BIDDERS

a. The Contractor shall sign and submit the forms located at the end of this section prior to award of the contract.

i. Certification of bidder regarding penalties for noncompliance with Nevada prevailing wage requirements.
ii. Certification of bidder, proposed contractor or subcontractor regarding debarment, suspension,

ineligibility of voluntary exclusion.

1.4 WEEKLY WAGE AND HOUR REPORT OF PUBLIC WORKS CONTRACTORS REPORTING FORMAT

A. Prepare Weekly Wage and Hour Reports of Public Works recording the following information concerning Public Work Project Hours performed by the contractor and all Subcontractors. The following information must be provided for each employee on this public works project:

1. Employee Name

2. Work Classification
   a. Level and Characteristics
   b. Group
   c. Zone pay amount
   d. Equipment type, if applicable

3. Hours worked by day, standard and overtime

4. Total hours for the week

5. Hourly rate of pay, standard and overtime

6. Prevailing hourly fringe benefit, broken down into categories

7. Total hourly rate of pay plus prevailing hourly fringe benefit paid

8. Applicable hourly prevailing wage rate

B. Prepare the Weekly Wage and Hour Report submittal log recording the following information concerning weekly reports from the contractor and all Subcontractors.

1. Report Number
2. Ending date for the Payroll Period

3. Contractors name and the date the report was submitted to the City of Fernley.

4. Subcontractors name and the date the report was submitted to the Contractor.

1.5 OWNER'S ACTION

A. The owner will review each submittal, mark to indicate action taken, and provide review and acceptance.

1. Compliance with submittal requirements is the Contractor's responsibility.

1.6 POSTINGS/SIGNAGE

A. Each contractor engaged on a public work must post the applicable prevailing rate of wages for the project on the site of the public work in a generally visible place to workmen.

B. Each contractor engaged on a public work must provide a sign with a white background and 6" black lettering stating:" Posted prevailing wages apply to this public works project". This sign must be posted on the site of the public work in a generally visible place to workmen. This will be maintained by the Contractor throughout the construction phase from the Notice to Proceed date through completion of the project.

PART 2 – PRODUCTS (Not Applicable)

PART 3 – EXECUTION (Not Applicable)

END OF SECTION 01110

CERTIFICATION OF BIDDER, PROPOSED CONTRACTOR OR SUBCONTRACTOR REGARDING DEBARMENT, SUSPENSION, INELIGIBILITY OR VOLUNTARY EXCLUSION

The undersigned bidder, proposed contractor or subcontractor certified, to the best of his or her knowledge and belief, that:

1. Neither it nor its principals are presently debarred, suspended, proposed for debarment, declared ineligible or voluntarily excluded from participation in this contract by any Federal department, agency, or program.

2. Neither it nor its principals are presently debarred, suspended, proposed for debarment, declared ineligible or voluntarily excluded from participation in public works contracts by the Nevada Labor Commissioner.

3. Where either the bidder or subcontractor is unable to certify to any of the above statements, the bidder or subcontractor shall attach an explanation as to why a certification cannot be submitted.

_____

Name of Bidder, Proposed Contractor or Subcontractor

_____

Name and Title of Authorized Representative

_____ _____

Signature Date

CERTIFICATION OF BIDDER REGARDING PENALTIES FOR NONCOMPLIANCE WITH NEVADA PREVAILING WAGE REQUIREMENTS

The undersigned bidder, proposed contractor or subcontractor certifies that:

1. This contract is for a public work as set forth in Nevada Revised Statutes Chapter 338.

2. A Contractor engaged on a public work shall forfeit, as a penalty to the public body on behalf of which the contract has been made and awarded to the Contractor, not less than $20 nor more than $50 for each calendar day or portion thereof that each worker employed on the public work:

    A. Is paid less than the designated rate for any work done under the contract, by the Contractor or any Subcontractor under him or her.

    B. For which the Contractor or Subcontractor willfully included inaccurate or incomplete information in the monthly record required to be submitted to the public body.

    C. Is not reported accurately to the public body awarding the contract as required pursuant to NRS 338.070, Subsection 5.

    D. If a violation of more than one (1) provision of this section involves the same worker, the Contractor shall forfeit the penalty set forth in each subsection that was violated.

3. If a penalty is imposed pursuant to this section, the costs of the proceeding, including investigative costs and attorney's fees, may be recovered by the Labor Commissioner.

_____

Name of Bidder

_____

Name and Title of Authorized Representative

_____ _____

Signature Date

CITY OF FERNLEY

WEEKLY WAGE AND HOUR REPORT
SUBMITTAL LOG

Report Number	Contractor	Week Ending Date	Date Submitted

WEEKLY WAGE AND HOUR REPORT OF PUBLIC WORK CONTRACTORS FOR THE PAYROLL PERIOD ENDING

Month and Day Year

Pursuant to Chapter 338 of NRS and NAC, respectively, the contractor and each subcontractor shall keep or cause to be kept an accurate record showing the name and the actual per diem, wages and benefits paid to each workman employed by him in connection with the public work. The contractor or subcontractor shall ensure that a copy of the record for each calendar month is received by the public body awarding the contract no later than 15 days after the end of the month.

Report # ☐ Regular Weekly Report ☐. Final Report Bid/Project # PWP-

Project Title Public Body Awarding Contract **City of Fernley**

Prime Contractor Name & Address License #

Subcontractor Name & Address License #

Employee Name & State/Jurisdiction that Issued Identification	Work Classification		Hours Worked By Day							Total Hours For Week	Hourly Rate Of Pay including fringe	Hourly Fringe Benefit Contribution					Gross Amount Earned For Week	Net Wage Paid For Week
			S	M	T	W	T	F	S			H & W	Pen.	Vac.	App. Trg	Other		
		S								0								
		O								0								
		S								0								
		O								0								

Report Hours For Above Referenced Public Works Project Only

Employee Name & State/Jurisdiction that Issued Identification	Work Classification	Hours Worked By Day								Total Hours For Week	Hourly Rate Of Pay including fringe	Hourly Fringe Benefit Contribution					Gross Amount Earned For Week	Net Wage Paid For Week
			S	M	T	W	T	F	S			H & W	Pen.	Vac.	App. Trg	Other		
			1/0	1/0	1/0	1/0	1/0	1/0	1/0									
		S								0								
		O								0								
		S								0								
		O								0								
		S								0								
		O								0								
		S								0								
		O								0								
		S								0								
		O								0								

Report Hours For Above Referenced Public Works Project Only

Employee Name & State/Jurisdiction that Issued Identification	Work Classification	Hours Worked By Day								Total Hours For Week	Hourly Rate of Pay including fringe	Hourly Fringe Benefit Contribution					Gross Amount Earned For Week	Net Wage Paid For Week
			S	M	T	W	T	F	S			H & W	Pen.	Vac.	App. Trg	Other		
			1/0	1/0	1/0	1/0	1/0	1/0	1/0									
		S								0								
		O								0								
		S								0								
		O								0								
		S								0								
		O								0								
		S								0								
		O								0								
		S								0								
		O								0								

Report Hours For Above Referenced Public Works Project Only

Employee Name & State/Jurisdiction that Issued Identification	Work Classification	Hours Worked By Day								Total Hours For Week	Hourly Rate of Pay including fringe	Hourly Fringe Benefit Contribution					Gross Amount Earned For Week	Net Wage Paid For Week
			S	M	T	W	T	F	S			H & W	Pen.	Vac.	App. Trg	Other		
			1/0	1/0	1/0	1/0	1/0	1/0	1/0									
		S								0								
		O								0								
		S								0								
		O								0								
		S								0								
		O								0								
		S								0								
		O								0								
		S								0								
		O								0								

Report Hours For Above Referenced Public Works Project Only

Employee Name & State/Jurisdiction that Issued Identification	Work Classification	Hours Worked By Day								Total Hours For Week	Hourly Rate of Pay including fringe	Hourly Fringe Benefit Contribution					Gross Amount Earned For Week	Net Wage Paid For Week
			S	M	T	W	T	F	S			H & W	Pen.	Vac.	App. Trg	Other		
			1/0	1/0	1/0	1/0	1/0	1/0	1/0									
		S								0								
		O								0								
		S								0								
		O								0								
		S								0								
		O								0								
		S								0								
		O								0								
		S								0								
		O								0								

Report Hours For Above Referenced Public Works Project Only

Employee Name & State/Jurisdiction that Issued Identification	Work Classification	Hours Worked By Day								Total Hours For Week	Hourly Rate of Pay including fringe	Hourly Fringe Benefit Contribution					Gross Amount Earned For Week	Net Wage Paid For Week
			S	M	T	W	T	F	S			H & W	Pen.	Vac.	App. Trg	Other		
			1/0	1/0	1/0	1/0	1/0	1/0	1/0									
		S								0								
		O								0								
		S								0								
		O								0								
		S								0								
		O								0								
		S								0								
		O								0								
		S								0								
		O								0								

Report Hours For Above Referenced Public Works Project Only

STATE OF NEVADA
Office of the Labor Commissioner
STATEMENT OF COMPLIANCE

In compliance with the provisions of Chapters 338 of NRS and NAC, respectively, I, as an officer, owner or director of the undersigned contractor, hereby certify that this report is a true and accurate statement of worker's earnings employed on this Public Works contract by the undersigned contractor for the following payroll period:

_____, _____ to _____, _____.
Month and Day Year Month and Day Year

I further certify:

1. That no deductions have been made from the wages earned by any person so listed other than those permissible or required by law.
2. That any apprentice listed herein is registered in a bona fide apprenticeship program.
3. Check all that apply:
   - ☐ The contractor is signatory to a collective bargaining agreement with some or all of its employees.
   - ☐ Each employee listed has been paid the required applicable wages plus the amount of fringe benefits listed in their contract.
   - ☐ Each employee listed has been paid the required applicable wages per hour with no fringe benefit contributions paid by the contractor.

☐ Prime Contractor
☐ Subcontractor

Contractor Name:	Address:
Telephone:	Fax:

_____ _____ _____
Printed Name / Title Signature Date

NRS 338.070:

4. The contractor and each subcontractor shall keep or cause to be kept an accurate record showing the name and the actual per diem, wages and benefits paid to each workman employed by him in connection with the public work.

5. The record must be open at all reasonable hours to the inspection of the public body awarding the contract, and its officers and agents. The contractor or subcontractor shall ensure that a copy of the record for each calendar month is received by the public body awarding the contract no later than 15 days after the end of the month. The copy must be open to public inspection as provided in NRS 239.010. The record in the possession of the public body awarding the contract may be discarded by the public body 2 years after final payment is made by the public body for the public work.

6. Any contractor or subcontractor, or agent or representative thereof, performing work for a public work who neglects to comply with the provisions of this section is guilty of a misdemeanor.

NON-PERFORMANCE PAYROLL REPORT FOR PUBLIC WORKS PROJECTS

Pursuant to Chapter 338 of NRS and NAC, respectively, the contractor and each subcontractor shall keep or cause to be kept an accurate record showing the name and the actual per diem, wages and benefits paid to each workman employed by him in connection with the public work. The contractor or subcontractor shall ensure that a copy of the record for each calendar month is received by the public body awarding the contract no later than 15 days after the end of the month.

Report # ☐ Regular Weekly Report ☐ Final Report Bid/Project # PWP-

Project Title Public Body Awarding Contract **CITY OF FERNLEY**

Prime Contractor Name & Address License #

Subcontractor Name & Address License #

Payroll period _____, _____ to _____ _____

Month and Day Year Month and Day Year

I hereby certify that no employees or owner/operators were used on the construction of this Public Works project during the payroll period above.□

_____ _____ _____

Name & Title (please print) Signature Date

COMPREHENSIVE CONTRACTOR/SUBCONTRACTOR LIST

All Prime and Sub-Contractors that will be utilized on this project (regardless of tier) shall be included on this list.
This list shall include all contractors/sub-contractors previously listed on the 5% and 1% lists.

PROECT NAME: _____ **BID #** _____

CONTRACTOR/SUBCONTRACTOR	CRAFT/TRADE DESCRIPTION OF WORK	CONTACT	ADDRESS	LICENSE #	MANUFACTURED HOUSING DIVISION (MHD) LICENSE If Applicable

SIGNATURE: _____ **DATE:** _____
Authorized Firm Representative

NAME: _____

TITLE: _____

Project Workforce Checklist

Contract No.: _____ Project Name: _____

Contractor/Subcontractor: _____

Craft/Trade	More than 3 Employees Anticipated	Anticipate Needing a Waiver
Air Balance Technician	Yes ☐ No ☐	Yes ☐ No ☐
Alarm Installer	Yes ☐ No ☐	Yes ☐ No ☐
Bricklayer, can also include tile setter, terrazzo workers and marble masons	Yes ☐ No ☐	Yes ☐ No ☐
Carpenter, can also include floor coverer, millwright and piledriver (non-equipment) and terrazzo workers	Yes ☐ No ☐	Yes ☐ No ☐
Cement Mason, can also include Laborers	Yes ☐ No ☐	Yes ☐ No ☐
Electrician, includes communication technician, line, neon sign and wireman. Can also include alarm installer	Yes ☐ No ☐	Yes ☐ No ☐
Elevator Constructor	Yes ☐ No ☐	Yes ☐ No ☐
Floor Coverer	Yes ☐ No ☐	Yes ☐ No ☐
Glazier, see also **Painters and Allied Trades**	Yes ☐ No ☐	Yes ☐ No ☐
Hod Carrier (see laborers), includes brick-mason tender and plaster tender	Yes ☐ No ☐	Yes ☐ No ☐
Iron Worker, includes fence erectors (steel/iron)	Yes ☐ No ☐	Yes ☐ No ☐
Laborer, can also include brick mason tender, cement mason, fence erector (non-steel/iron), flag person, highway striper, landscaper, plastic tender, and traffic barrier erector	Yes ☐ No ☐	Yes ☐ No ☐
Lubrication and Service Engineer	Yes ☐ No ☐	Yes ☐ No ☐
Mechanical Insulator	Yes ☐ No ☐	Yes ☐ No ☐
Millwright	Yes ☐ No ☐	Yes ☐ No ☐

Craft/Trade	More than 3 Employees Anticipated	Anticipate Needing a Waiver
Operating Engineer, can also include equipment greaser, piledriver, soils and material tester, steel fabricator/erector (equipment) and surveyor (non-licensed) and well driller	Yes ☐ No ☐	Yes ☐ No ☐
Painters and Allied Trades, can also include glaziers, floor coverers, and tapers	Yes ☐ No ☐	Yes ☐ No ☐
Pile Driver (non-equipment)	Yes ☐ No ☐	Yes ☐ No ☐
Plasterer	Yes ☐ No ☐	Yes ☐ No ☐
Plumber/Pipefitter	Yes ☐ No ☐	Yes ☐ No ☐
Refrigeration	Yes ☐ No ☐	Yes ☐ No ☐
Roofer (not sheet metal)	Yes ☐ No ☐	Yes ☐ No ☐
Sheet Metal Worker, can also include air balance technician	Yes ☐ No ☐	Yes ☐ No ☐
Soils and Materials Tester, includes certified soil tester	Yes ☐ No ☐	Yes ☐ No ☐
Sprinkler Fitter	Yes ☐ No ☐	Yes ☐ No ☐
Surveyor (non-licensed)	Yes ☐ No ☐	Yes ☐ No ☐
Taper	Yes ☐ No ☐	Yes ☐ No ☐
Tile/Terrazzo Worker/Marble Mason	Yes ☐ No ☐	Yes ☐ No ☐
Traffic Barrier Erector (See Laborers)	Yes ☐ No ☐	Yes ☐ No ☐
Truck Driver	Yes ☐ No ☐	Yes ☐ No ☐
Well Driller (see also Operating Engineer)	Yes ☐ No ☐	Yes ☐ No ☐
Other:	Yes ☐ No ☐	Yes ☐ No ☐

I affirm I am fully authorized to acknowledge, on behalf of the Contractor listed above, the anticipated workforce, and acknowledge that changes to the anticipated workforce which may have an impact on compliance with the Nevada Apprenticeship Utilization Act, 2019 will require the submittal of a revised form within ten (10) working days of such change.

Signed:_____
Name and Title:_____
Date:_____
Contractor Name:_____

SECTION 01200 - PROJECT MEETINGS

PART 1- GENERAL

1.1 RELATED DOCUMENTS

A. Drawings and general provisions of the Contract, including all bid documents and addendums associated with this project shall apply to this section.

1.2 SUMMARY

A. This section includes administrative and procedural requirements for project meetings including, but not limited, to the following:

1. Pre-Construction Conference

2. Pre-Installation Conferences

3. Coordination Meetings

4. Progress Meetings

5. Start-up / Training

6. Service, maintenance, warranty review.

B. Construction Schedules are specified in Division 1 SECTION 01310-A – PROGRESS SCHEDULES.

1.3 PRE-CONSTRUCTION CONFERENCE

A. The Contractor shall schedule a pre-construction conference and organizational meeting at the project site or other convenient location no later than fifteen (15) days after execution of the Contract and prior to commencement of any construction activities. The Contractor shall conduct the meeting to review scope, responsibilities, personnel assignments, Permits, submittals, safety, emergency action plans, contacts, schedule, etc.

B. Attendees: Owner; Architect, and their consultants; Contractor and their Superintendent and major sub-contractors; and manufacturers, suppliers and other concerned appropriate parties shall each be represented at the conference by persons familiar with and authorized to conclude matters relating to the work.

C. Agenda: Discuss items of significance that could affect progress including such topics as:

1. Construction schedule

2. Critical work sequencing

3. Designation of responsible personnel

4. Procedures for processing field decisions and change orders

5. Procedures for processing Applications for Payment

6. Submittal of Shop Drawings, product data and samples

7. Preparation of Record Documents

8. Use of the premises

9. Office, work and storage areas

10. Equipment deliveries and priorities

11. Safety and Security, emergency procedures

12. Housekeeping

13. Working hours

1.4 PRE-INSTALLATION CONFERENCES

A. Conduct a pre-installation conference at the site before each major construction activity that requires coordination with other construction. The installer and representatives of manufacturers and fabricators involved in or affected by the installation, and its coordination of integration with other materials and installations that have preceded or will follow, shall attend the meeting. The Contractor shall advise the Architect of scheduled meeting dates.

B. Review the progress of other construction activities and preparations for the particular activity under consideration at each pre-installation conference, including requirements for:

1. Contract Documents

2. Options

3. Related Change Orders

4. Purchases

5. Deliveries

6. Shop Drawings, products data and quality control samples

7. Possible conflicts

8. Compatibility problems

9. Time schedules

10. Weather limitations

11. Manufacturer's recommendations

12. Compatibility of materials

13. Acceptability of substrates

14. Temporary facilities

15. Space and access limitations

16. Governing regulations

17. Inspection and testing requirements

18. Required performance results

19. Recording requirements

20. Protections

C. Record significant discussions and agreements and disagreements of each conference, along with the approved schedule. Distribute the minutes of the meeting to everyone concerned, promptly, including the Owner and the Architect.

D. Do not proceed if the conference cannot be successfully concluded. Initiate whatever actions are necessary to resolve impediments to performance of work and reconvene the conference at the earliest feasible date.

1.5 PROGRESS MEETINGS

A. Conduct a weekly progress meeting at the project site at regularly

scheduled intervals. Coordinate with the Owner and the Architect of scheduled meeting dates. Coordinate dates of meetings with preparation of the payment request, Change Order request, mockup reviews, etc.

B. Attendees: In addition to representatives of the Owner, Architect, Construction Manager each sub-contractor, supplier or other entity concerned with current progress or involved in planning, coordination or performance of future work shall be represented at these meetings by persons familiar with the project and authorized to conclude matters relating to progress.

C. Agenda: Review and correct or approve minutes of the previous progress meeting. Review other items of significance that could affect progress. Include topics for discussion as appropriate to the current status of the project.

1. Contractor's Construction Schedule: Review progress since the last meeting. Determine where each activity is in relation to the Contractor's construction schedule, whether on time or ahead or behind schedule. Determine how construction that is behind schedule will be expedited; and secure commitments from parties involved to do so. Discuss whether schedule revisions are required to ensure that current and subsequent activities will be completed within the allotted contract time.

2. Review the present and future needs of each entity present, including such items as:

    a. Interface requirements
    b. Time
    c. Sequence
    d. Deliveries
    e. Off-site fabrication problems
    f. Access
    g. Site utilization
    h. Temporary facilities
    i. Hours of work
    j. Hazards of work
    k. Housekeeping
    l. Quality and work standards
    m. Change Orders
    n. Documentation of information for payment requests

D. Reporting: No later than three (3) days after each progress meeting date, distribute copies of minutes of the meeting to each party present and to other parties who should have been present. Include a brief summary, in narrative form, of progress since the previous meeting and report.

1. Schedule Updating: update the construction progress schedule after each progress meeting where modifications to the schedule have been made or recognized. Issue the updated schedule concurrently with the report of each meeting.

1.6 GUARANTEE/WARRANTIES; BONDS; AND SERVICE AND MAINTENANCE CONTRACTS REVIEW MEETING:

A. Eleven (11) months following the date of Substantial Completion of the work, hold a meeting for the purpose of review of guarantees/warranties; bonds; and service and maintenance contracts for materials and equipment.

B. Meeting location shall be at a mutually agreed upon site, as convenient as possible for all parties.

C. Attending shall be representatives of the following:

1. Owner

2. Architect

3. Owner's and Architect's Consultants, as appropriate to the agenda

4. Construction Manager

5. Commissioning Agent

6. Contractor

7 Sub-contractors, as appropriate to the agenda

8. Suppliers, as appropriate to the agenda

9. Others, as appropriate to the agenda

D. Owner will prepare an agenda for the meeting and distribute it to the attendees a minimum of seven (7) calendar days in advance of the scheduled meeting date.

E. The Contractor shall take action as appropriate to implement repair or replacement of defective items and to extend service and maintenance contracts.

F. Owner or Owners Representative shall take meeting notes and distribute them to all attendees. Attendees taking exception to anything in the meeting notes shall state in writing to the Owner within five (5) working days, following receipt of meeting notes.

PART 2 – PRODUCTS (Not Applicable)

PART 3 – EXECUTION (Not Applicable)

END OF SECTION 01200

SECTION 01300 – SUBMITTALS

PART 1 - GENERAL

1.1 RELATED DOCUMENTS

A. Drawings and general provisions of the Contract, including all bid documents and addendums associated with this project shall apply to this section.

1.2 SUMMARY

A. This section includes administrative and procedural requirements for submittals required for performance of the work, including the following:

1. Submittal Schedule
2. Daily Construction Reports
3. Shop Drawings
4. Product Data
5. Samples
6. Quality Assurance Submittals
7. Record Drawings
8. Record Specifications

B. Administrative Submittals: Refer to other Division 1 Sections and other contract documents for requirements for administrative submittals. Such submittals include, but are not limited to, the following:

1. Permits
2. Applications for Payment
3. Performance and Labor & Material Bonds
4. Insurance Certificates
5. List of Sub-Contractors

C. Related Sections: The following sections contain requirements that relate to this section:

1. Division 1 SECTION 01027 – APPLICATION FOR PAYMENT specifies requirements for submittal of the Schedule of Values.

2. Division 1 SECTION 01040 - COORDINATION specifies requirements governing preparation and submittal of required coordination drawings.

3. Division 1 SECTION 01200 – PROJECT MEETING specifies requirements for submittal and distribution of meeting and conference minutes.

4. Division 1 SECTION 01400 – QUALITY CONTROL specifies requirements for submittal of inspection and test reports.

5. Division 1 SECTION 01700 – CONTRACT CLOSEOUT specifies requirements for submittal of project Record Documents and warranties at project closeout.

1.3 DEFINITIONS

A. Coordination drawings show the relationship and integration of different construction elements that require careful coordination during fabrication or installation to fit in the space provided or to function as intended.

1. Preparation of coordination drawings is specified in Division 1 SECTION 01040 - COORDINATION and may include components previously shown in detail on Shop Drawings or Product Data.

B. Field samples are full size physical examples erected onsite to illustrate finishes, coatings or finish materials. Field samples are used to establish the standard by which the work will be judged.

C. Mockups are full size assemblies for review of construction, coordination, testing or operation; they are not samples.

1.4 SUBMITTAL PROCEDURES

A. Coordination: Coordinate preparation and processing of submittals with performance of construction activities. Transmit each submittal sufficiently in advance of performance of related construction activities to avoid delay.

1. Coordinate each submittal with fabrication, purchasing, testing, delivery, other submittals and related activities that require sequential activity.

2. Coordinate transmittal of different types of submittals for related elements of the work so processing will not be delayed by the need to review submittals concurrently for coordination.

a. The Architect reserves the right to withhold action on a submittal requiring coordination with other submittals until all related submittals are received.

3. Processing: To avoid the need to delay installation as a result of the time required to process submittals, allow sufficient time for submittal review, including time for resubmittals.

a. Allow three (3) weeks for initial review. Allow additional time if the Architect must delay processing to permit coordination with subsequent submittals or needs additional information to complete review.
b. If an intermediate submittal is necessary, process the same as the initial submittal.
c. Allow two (2) weeks for reprocessing each submittal.
d. No extension of contract time, overhead or profit will be authorized because of failure to transmit submittals to the Architect sufficiently in advance of the work to permit processing.
e. Allow four (4) weeks for initial review of any submittal requiring review by Authority Having Jurisdiction (AHJ). A listing of these known submittals is indicated on the contract drawings, but this is not necessarily exhaustive.

B. Submittal Preparation: Place a permanent label or title block on each submittal for identification. Indicate the name of the entity that prepared each submittal on the label or title block.

1. Provide a space approximately 4" x 5" (100 x 125 mm) on the label or beside the title block on the Shop Drawings to record the Contractor's review and approval markings and the action taken.

2. Include the following information on the label for processing and recording action taken:

a. Project Name
b. Date
c. Name and Address of the Architect
d. Name and Address of the Contractor
e. Name and Address of Sub-Contractor
f. Name and Address of Supplier
g. Name of the Manufacturer
h. Number and Title of appropriate specification section
i. Drawing Number and detail references, as appropriate

C. Submittal Transmittal: Package each submittal appropriately for transmittal and handling. Transmit each submittal from the Contractor to the Architect using a transmittal form. The Architect will not accept submittals received from sources other than the Contractor.

1. On the transmittal, record relevant information and requests for data. On the form, or separate sheet, record deviations from contract document requirements, including variations and limitations. Include Contractor's certification that information complies with contract document requirements.

2. Transmittal Form: Use AIA Document G810.

1.5 SUBMITTAL SCHEDULE

A. After development and acceptance of the Contractor's construction schedule, prepare a complete schedule of submittals. Submit the schedule within ten (10) days of the date required for submittal of the Contractor's construction schedule.

1. Coordinate submittal schedule with the list of sub-contracts, schedule of values and the list of products as well as the Contractor's construction schedule.

2. Prepare the schedule in chronological order. Provide the following information:

a. Scheduled date for the first submittal
b. Related section number
c. Submittal category (Shop Drawings, Product Data or Samples)
d. Name of the Sub-Contractor
e. Description of the part of the work covered
f. Scheduled date for resubmittal
g. Scheduled date for the Architect's final release or approval

B. Distribution: Following response to the initial submittal, print and distribute copies to the Architect, Owner, Sub-Contractors and other appropriate parties required to comply with submittal dates indicated. Post copies in the project meeting room and field office.

1. When revisions are made, distribute to the same parties and post in the same locations. Delete parties from distribution when they have completed their assigned portion of the work and are no longer involved in construction activities.

C. Schedule Updating: Revise the schedule after each meeting or activity where revisions have been recognized or made. Issue the updated schedule concurrently with the report of each meeting.

1.6 DAILY CONSTRUCTION REPORTS

A. Prepare a daily construction report recording the following information concerning events at the site and submit duplicate copies to the Architect at weekly intervals:

1. List of sub-contractors at the site

2. Exact count of personnel at the site from each contractor or sub-contractor

3. Time spent by each person working on site vs off the job site

4. High and low temperatures, general weather conditions

5. Accidents and unusual events

6. Meetings and significant decisions

7. Stoppages, delays, shortages and losses

8. Emergency procedures

9. Orders and requests of governing authorities

10. Change Orders received, implemented

11. Services connected, disconnected

12. Equipment or system tests and startups

13. Partial Completions, occupancies

14. Substantial Completions authorized

15. Record Drawing identified changes

16. Record Specification identified changes

1.7 SHOP DRAWINGS

A. Submit newly prepared information drawn accurately to scale. Highlight, encircle or otherwise indicate deviations from the contract documents. Do not reproduce contract documents or copy standard information as the basis of Shop Drawings. Standard information prepared without specific reference to the project is not a Shop Drawing.

B. Shop Drawings include fabrication and installation drawings, setting diagrams, schedules, patterns, templates and similar drawings. Include the following information:

1. Dimensions

2. Identification of products and materials included by sheet and detail number

3. Compliance with specified standards

4. Notation of coordination requirements

5. Notation of dimensions established by field measurement

6. Sheet Size: Except for templates, patterns and similar full-size drawings, submit Shop Drawings on sheets at least 8½" x 11" but, no larger than 30" x 42".

7. Submit in the quantity the Contractor requires to be returned, together with four (4) additional copies each of brochures, catalog cuts and similar material for mechanical, electrical, hardware and elevator items; and three (3) additional copies for all others.

8. Do not use Shop Drawings without an appropriate final stamp indicating action taken.

1.8 PRODUCT DATA

A. Collect Product Data into a single submittal for each element of construction or system. Product Data includes printed information, such as manufacturer's installation instructions, catalog cuts, standard color charts, roughing in diagrams and templates, standard wiring diagrams and performance curves.

1. Mark each copy to show applicable choices and options. Where printed, Product Data includes information on several products that are not required, mark copies to indicate the applicable information. Include the following information:

a. Manufacturer's printed recommendations
b. Compliance with trade association standards
c. Compliance with recognized testing agency standards
d. Application of testing agency labels and seals
e. Notation of dimensions verified by field measurement
f. Notation of coordination requirements

2. Do not submit Product Data until compliance with requirements of the contract documents has been confirmed.

3. Preliminary Submittal: Submit a preliminary single copy of Product Data where selection of options is required.

4. Submittals: Submit three (3) copies of each required submittal; submit four (4) copies where required for maintenance manuals. The

Architect will retain one and will return one (1) marked with action taken and corrections or modifications required. One (1) copy with review comments will be supplied to the Owner.

a. Unless non-compliance with contract document provisions is observed, the submittal may serve as the final submittal.

5. Distribution: Furnish copies of final submittal to installers, sub-contractors, suppliers, manufacturers, fabricators and others required for performance of construction activities. Show distribution on transmittal forms.

a. Do not proceed with installation until a copy of Product Data is in the installer's possession.
b. Do not permit use of unmarked copies of Product Data in connection with construction.

1.9 SAMPLES

A. Submit full size, fully fabricated samples cured and finished as specified and physically identical with the material or product proposed. Samples include partial sections of manufactured or fabricated components, cuts or containers of materials, color range sets and swatches showing color, texture and pattern.

1. Mount or display samples in the manner to facilitate review of qualities indicated. Prepare samples to match the Architect's sample. Include the following:

a. Specification section number and reference
b. Generic description of the sample
c. Sample source
d. Product name or name of the manufacturer
e. Compliance with recognized standards
f. Availability and delivery time

2. Submit samples for review of size, kind, color, pattern, texture, and lead content testing for all paints and painted materials. Submit Samples for a final check of these characteristics with other elements and a comparison of these characteristics between the final submittal and the actual component as delivered and installed.

a. Where variation in color, pattern, texture or other characteristic is inherent in the material or product represented, submit at least three (3) multiple units that show approximate limits of the variations.
b. Refer to other specification sections for requirements for samples that illustrate workmanship, fabrication techniques, details of

assembly, connections, operation and similar construction characteristics.

c. Refer to other sections for samples to be returned to the Contractor for incorporation in the work. Such samples must be undamaged at time of use. On the transmittal, indicate special requests regarding disposition of sample submittals.

d. Samples not incorporated into the work, or otherwise designated as the Owner's property, are the property of the Contractor and shall be removed from the site prior to Substantial Completion.

e. Samples that are tested by CITY to have any lead content shall be rejected.

3. Preliminary Submittals: Submit a full set of choices where samples are submitted for selection of color, pattern, texture or similar characteristics from a range of standard choices.

a. The Architect will review and return preliminary submittals with the Architect's notation, indicating selection and other action.

4. Submittals: Except for samples illustrating assembly details, workmanship, fabrication techniques, connections, operation and similar characteristics, submit three (3) sets. The Architect will return one set marked with the action taken.

5. Maintain sets of samples, as returned, at the project site, for quality comparisons throughout the course of construction.

a. Unless non-compliance with contract document provisions is observed, the submittal may serve as the final submittal.

b. Sample sets may be used to obtain final acceptance of the construction associated with each set.

B. Distribution of Samples: Prepare and distribute additional sets to sub-contractors, manufacturers, fabricators, suppliers, installers and others as required for performance of the work. Show distribution on transmittal forms.

1. Field samples are full size examples erected on site to illustrate finishes, coatings or finish materials and to establish the project standard.

a. Comply with submittal requirements to the fullest extent possible. Process transmittal forms to provide a record of activity.

1.10 QUALITY ASSURANCE SUBMITTALS

A. Submit quality control submittals, including design data, certifications, manufacturer's instructions, manufacturer's field reports and other quality control submittals as required under other sections of the specifications.

B. Certifications: Where other sections of the specifications require certification that a product, material or installation complies with specified requirements, submit a notarized certification from the manufacturer certifying compliance with specified requirements.

1. Signature: Certification shall be signed by an officer of the manufacturer or other individual authorized to sign documents on behalf of the company.

C. Inspection and Test Reports: Requirements for submittal of inspection and test reports from independent testing agencies are specified in Division 1 SECTION 01400 – QUALITY CONTROL.

1.11 ARCHITECT'S ACTION

A. Except for submittals for the record or information, where action and return is required, the Architect will review each submittal, mark to indicate action taken and return promptly.

1. Compliance with specified characteristics is the Contractor's responsibility.

B. Action Stamp: The Architect will stamp each submittal with a uniform, action stamp. The Architect will mark the stamp appropriately to indicate the action taken, as follows:

1. Final Unrestricted Release: When the Architect marks a submittal "No Exceptions Taken," the work covered by the submittal may proceed provided it complies with requirements of the contract documents. Final payment depends on that compliance.

2. Final-But-Restricted Release: When the Architect marks a submittal "Implement Exception Noted," the work covered by the submittal may proceed provided it complies with notations or corrections on the submittal and requirements of the contract documents. Final payment depends on that compliance.

3. Returned for Resubmittal: When the Architect marks a submittal "Not Approved, Revise and Resubmit," do not proceed with work covered by the submittal, including purchasing, fabrication, delivery or other activity. Revise or prepare a new submittal according to the notations; resubmit without delay. Repeat if necessary to obtain different action mark.

a. Do not use, or allow others to use, submittals marked "Not Approved, Revise and Resubmit" at the project site or elsewhere where work is in progress.

b. When the submittal review action stamp is marked “Rejected”, do not proceed with that portion of the work covered by the submittal including, but not limited to, purchasing, fabrication, delivery or other activity. Make a new submittal in accordance with the review notations on the submittal and resubmit without delay in the same manner and number as for the original submittal. Resubmit as often as necessary as required to obtain an unrestricted or restricted release action. “Rejected” review action stamp notation shall not be construed by the Contractor as a valid reason for an increase in contract time.

4. Other Action: Where a submittal is for information or record purposes or special processing or other activity, the Architect will return the submittal marked "Action Not Required."

C. Unsolicited Submittals: The Architect will return unsolicited submittals to the sender without action.

PART 2 – PRODUCTS (Not Applicable)

PART 3 – EXECUTION (Not Applicable)

END OF SECTION 01300

SECTION 01310B – PROGRESS SCHEDULES AND CASH FLOW PLAN

PART 1 – GENERAL

1.1 SECTION INCLUDES

A. References

B. Schedule Submittal Requirements

C. Schedule Submittal Format

D. CPM Schedule Structural Requirements

E. Updating Schedules

F. Schedule Revisions

G. Time Extensions

H. Three Week Look Ahead Schedule

1.2 RELATED SECTIONS

A. SECTION 00100 – INSTRUCTIONS TO BIDDERS

B. SECTION 00800 – SUPPLEMENTARY GENERAL CONDITIONS

C. SECTION 01010 – SUMMARY OF WORK

D. SECTION 01027 – APPLICATION FOR PAYMENT

E. SECTION 01300 – SUBMITTALS

1.3 REFERENCES

A. Reference: O'Brien, James J., and Fredric L Plotnick, *"CPM in Construction Management"*, 7th Ed., McGraw-Hill, Inc., New York, 2010.

1.4 SCHEDULE SUBMITTAL REQUIREMENTS

A. Preliminary Documents: Submit, in duplicate, as described in Part 1.5 A., to the Owner and Architect at the Pre-construction Conference the following Preliminary Documents defining planned operations:

1. Preliminary Schedule (90 Day) (bar chart PDF and electronic P6 XER file)

2. Cash Flow Curve

3. Submittal Schedule

B. The Architect and Owner will review schedule submittals; such review shall not constitute an approval or acceptance of the Contractor's construction means, methods, sequencing, or its ability to complete the Work in a timely manner.

C. The Preliminary Documents will illustrate, at a minimum, a detailed baseline schedule for those activities commencing within the first ninety (90) calendar days after the Notice to Proceed is issued by the Owner (Preliminary Schedule (90 Day)). Within seven (7) calendar days after the date of the Pre-construction Conference, the Contractor, including its primary superintendent, will participate in a Schedule Review meeting with the Owner and Architect. As part of the review meeting, the Contractor will be prepared to explain its approach to the scheduling, sequencing of the work, submittals, and its cash flow forecast. Based on comments provided by the Owner and Architect, as well as agreed to changes by all parties, the Contractor will revise and resubmit the Preliminary Schedule (90 Day) and progress curve within seven (7) calendar days from the date of the Schedule Review meeting.

D. Baseline Documents: The Contractor shall submit the completed Baseline Schedule to the Owner and Architect within thirty (30) calendar days from the Notice of Award. The schedules shall integrate the activities of the Preliminary Schedule (90 Day), and include all activities required for contract completion.

1. Within ten (10) calendar days after receipt of the complete Baseline Schedule, the Owner and Architect will communicate in writing, its comments and concerns to the Contractor. Within five (5) working days, Contractor shall adjust the Baseline Schedule and Progress Curve to incorporate comments from the Owner and Architect and re-submit.

2. Upon Owner and Architect receipt and acknowledgment of revisions to the Baseline Schedule and Progress Curve, the Baseline Documents shall become part of the Contract Documents.

E. The Contractor shall not submit a Baseline Schedule that indicates a contractual substantial completion date earlier than the Contractual Substantial Completion Date as defined in the City of Fernley's issued Notice to Proceed letter. Any Baseline Schedule submission that indicates an early completion of the project shall be rejected. In any event, if the Contractor should plan to complete the work earlier than the Contractual Substantial Completion Date, the Owner shall not be liable to the Contractor for any costs or other damages if the Contractor is unable to complete the work before the Contractual Substantial Completion date.

F. Should the Contractor fail to define an element of work, activity or logic and the Owner and / or Architect does not detect this omission during the review of the Baseline Schedule, the Contractor shall be required to correct this omission(s) when discovered by the Owner and / or Architect and / or Contractor. The

correction(s) will be made before the next Monthly Schedule Update after the omission(s) is discovered. The inclusions of this correction(s) shall not be cause for delay of the completion of the work within the specified contract time or any increase in cost.

G. Include the submission and approval of the Baseline Schedule as a cost line item in the Schedule of Values. Payment to the Contractor shall be withheld until such schedule, satisfactory in form and substance to the Owner and Architect, has been received and approved.

H. After the Baseline Schedule has been approved, no change in logic and / or durations shall be made without first providing written notification to Owner and Architect for Contractor's need to change and approval for these changes has been provided to the Contractor by the Owner and Architect. Consideration will be given for Contractor changes if they are determined to be reasonable by narrative explanation. Acceptance or rejection of any requested revisions is without liability to the Owner, Architect, or any of their representatives. Unreasonable logic or duration changes to simply accommodate a perception of being on-schedule will not be accepted.

I. Failure to provide the required schedule information at the required times will result in denial of the relative portion of progress payments, until such time that the schedule information is submitted in the correct format, at the sole discretion of the Owner.

J. Re-Baseline Schedule: At the discretion of the Architect and / or Owner, when the most current Monthly Schedule Update no longer represents the planned sequence of construction as reflected in the approved Baseline Schedule, the Architect and / or Owner may require that a Re-Baseline Schedule be prepared. This Re-Baseline Schedule shall indicate the Contractors revised plan to complete the project within the Contractual Substantial Completion date.

K. Recovery Schedule: When the most current Monthly Schedule Update indicates a delay based on the actual progress of the work of negative fifteen (-15) or less calendar days versus the planned progress in the approved Baseline Schedule, the Architect and / or Owner may require that a Recovery Schedule be prepared. This Recovery Schedule shall indicate the Contractors revised plan and methods that will be used to complete the project by the Contractual Substantial Completion date. The Recovery Schedule will be required within ten (10) calendar days of request by Architect and / or Owner.

1.5 SCHEDULE SUBMITTAL FORMAT

A. Follow the guidelines below when submitting a Baseline, Update or Look-ahead Schedule.

B. Required Submittals:

1. Bar Chart: sheet size to be 8-1/2 x 11 inches minimum, organized by the WBS as prescribed herein.

2. Cash Flow Curve; Minimum sheet size to be 8½ x 11 inches.

3. The formatting of the hard-copy and electronic submissions of the Baseline Schedule, Schedule Updates and 3-Week Look-ahead Schedules shall include the following information in the order shown:

   a. Activity ID Number
   b. Activity Description
   c. Calendar ID
   d. Original Duration
   e. Remaining Duration
   f. Percent Complete
   g. Total Float
   h. Early Start Date
   i. Early Finish Date
   j. Primary Baseline Early Start (except on Baseline Schedule)
   k. Primary Baseline Early finish (except on Baseline Schedule)

4. On all Update and Look-ahead Schedules, the approved Baseline Schedule shall be included as the Primary Baseline Schedule and be shown as the Primary Baseline Bar with Primary Baseline Early Start and Primary Baseline Early Finish dates. The format of the Title Block shall include (at a minimum) Contractor's name, project number, file name, start date, finish date, data date and run date.

5. Required Electronic Media: Provide all Schedule files in PDF and XER format electronically on CD, DVD, or flash drive and via an attachment to an email to the Owner and Architect. The Contractor is to provide two (2) electronic copies of all Baseline and Schedule Updates including the 3- Week Look-ahead Schedules in the prescribed scheduling software format. Disks are to have the Contractor's name, project number, schedule file name, and data date on the disk label. All Schedule data files must be created by excluding any necessity of usernames and/or password requirements. 3-Week Lookahead files for the weeks preceding the month end Schedule Update may be placed on the same media.

6. The Contractor will be responsible for planning, scheduling, managing, and reporting the progress of the Work in accordance with this specification section.

7. All Contract required Construction Schedules shall be prepared by a competent scheduler, and used by the Contractor to plan, prosecute, and coordinate the Work in an orderly and expeditious manner. The approved Baseline Schedule will be used by the Owner and the Architect to evaluate

progress and status of the required Update Schedules at the various stages of the Project and establish the basis for progress payments.

8. Required Critical Path Method (CPM) software, using compatible hardware, to be used for scheduling:

   a. Oracle's Primavera P6, Version 15.1 or equivalent scheduling program.

1.6 CPM SCHEDULE STRUCTURAL REQUIREMENTS

The following requirements have been defined in an effort to create consistency across all project schedules for purpose of analysis.

A. File Naming Schemes for Schedules are to use the following italicized naming schemes:

   1. Preliminary Schedule:

   2. Baseline Schedule:

   3. Monthly Schedule Update:

   4. Three-week Look-ahead Schedules provided at the weekly Project Meetings are to be a working schedule, each with a unique file name. The reason for this is to accommodate CITY program-wide scheduling needs.

B. Structure of Schedule:

   1. No work activities in the Schedule shall have an Original Duration greater than fifteen (15) workdays, except for Submittals; Fabrication and Delivery of Materials and Equipment; and Level of Effort tasks, without prior approval of the Owner. For all required Submittal Activities, please refer to Project Manual Section 01300, Shop Drawings, for the allowed submission timeframe after the Pre-Construction conference. All Submittal activities must conform to this timeframe.

   2. Dependencies between activities shall be indicated so that it may be established as to the effect the progress of any one activity would have on the Schedule. Dependencies shall make use of Finish-to-Start (FS), Start- to-Start (SS), and Finish-to-Finish (FF) logic relationships. All activities that have a successor Start-to-Start relationship shall also include a successor

Finish-to-Start or Finish-to-Finish relationship. There shall not be any open-ended activities except as noted below. Use of Start-to-Finish (SF) logic ties shall not be allowed without written justification and acceptance by the Owner and Architect prior to implementation. Leads or lags will not be used when the creation of an activity will perform the same function (e.g., concrete cure time). Dependencies shall not make use of negative lags. The use of any lead or lag shall require a written explanation by the Contractor in a narrative Report. All activities, except Notice to Proceed and Final Completion, are required to have at least one predecessor and one successor.

3. Date/time constraint(s), other than those required by the contract, will not be allowed unless the Contractor specifically asks in a narrative how they intend to use these constraints and they are accepted by the Owner and Architect. The only exception is that Zero-Free Float constraints may only be used to set individual Pre-Construction Meetings to within 5 days of the first-time occurrence of each meeting.

4. Calendars: Define at least two (2) calendars for the schedule.

    a. Calendar 1 shall be a five-day week (workdays) and is to reflect Saturdays, Sundays, and all Holidays as non-workdays.
    b. Calendar 2 shall be seven-day week (calendar days) and is to reflect Saturdays, Sundays, and Holidays as workdays.
    c. When defining calendars, use "Total Work Hours/Day"; do not use "Detailed Work Hours/Day". The latter occasionally creates issues with start and finish times and dates.
    d. The aforementioned two calendars and any others are to be "Project" calendars. Use of "Global" or "Resource" calendars are prohibited.

5. The schedule should be broken down into logical areas of work by use of a Work Breakdown Structure (WBS). In the WBS, minimally separate schedule activities by building or major areas, if within one building. Within each building separate the schedule activities by Building System per ASTM Uniformat II Classification for Building Elements (E1557) Level 2 Group Elements. At a minimum, the following areas shall be included:

    a. Milestones
    b. Level of Effort Summary
    c. Prepare and Transmit Submittals
    d. Review Submittals
    e. Material Procurement & Delivery
    f. On Site Work
    g. Retaining Walls (if applicable)
    h. Off Site Work
    i. Building Foundation & SOG
    j. Building Structure
    k. Building Exterior Enclosure

l. Building Roofing
m. Building Interior Framing & Rough-in
n. Building Interior Finishes & Trim
o. Punchlist, Testing & Inspection

6. Activity Coding

a. In addition to use of the Work Breakdown Structure, develop an Activity Code structure, and code all schedule activities to minimally the following activity codes:
   1) Area
   2) Subarea
   3) Responsibility

7. Tasks related to the submittal and procurement of material and equipment shall be included as separate activities in the project schedule. Sequences for major material items, such as reinforcing steel, structural steel, and steel joists, etc. shall be shown as individual activities within the schedule. Major equipment items, such as HVAC equipment, electrical equipment, specialty items, and any long lead material or equipment items shall be shown as individual activities within the schedule. Examples of submittal/procurement activities include, but are not limited to:

a. Material/Equipment submittal preparation
b. Submittal and Approval of material/equipment
c. Fabrication and/or Delivery of Equipment and Specialty Materials:
d.
   1) Separate Activities shall be required when durations will be greater or equal to 30 calendar days maximum for each delivery.

   2) Delivery Activities that are phased or partial deliveries shall require an Activity ID with logic relationship to installation and/or the related construction activities.

e. Delivery of extra parts/extra stock/special tools
f. Notification of Owner furnished materials / equipment delivery requirements
g. Delivery of O&M manuals

8. The approved Baseline schedule shall become the basis for all Weekly Look-ahead and Monthly Schedule Updates. The approved Baseline Schedule shall also be shown as the Primary Baseline Schedule in all Weekly Look-ahead and Monthly Schedule Updates.

9. Construction activities shall include at a minimum, but are not limited to:

a. Permit Requirements
b. Tasks corresponding to each specification section covered in the Specification Index in Divisions 01 through 33
c. Tasks related to mobilization / demobilization

d. The installation of temporary or permanent work by tradesman
e. Testing and inspections of installed work by technicians, inspectors or engineers
f. Required outside Agency inspections
g. System utility outages and tie-ins
h. Start-up and testing of equipment, commissioning of building and related systems
i. Scheduling of specified manufacturer's representatives
j. Contractor's Punch list activity by area
k. Final clean-up
l. Training to be provided
m. Final Punch list
n. Maintenance period
o. Administrative tasks necessary to start, proceed with, accomplish or finalize the contract

10. The following logic relationships will be required in any precedence diagram method used:

a. All logical relationships shall be finish to start (FS) as much as practical. Start to start (SS) and finish to finish (FF) relationships may be used as follows:
   1) successors may be SS with a corresponding FF relationship
   2) at a milestone or at the conclusion of the network
   3) use in Level of Effort activities
b. Lag factor use should be limited. Lag factors shall not be used when the work could be identified as a functional activity (i.e., concrete curing).
c. Accepted Schedules shall only contain Contract Required Early Start and/or Early Finish Constraints. Additional constraints may be used if authorization from the Owner and / or Architect is received prior to their implementation.
d. The retained logic mode is required for schedule calculations.
e. Under Enterprise / Projects / Settings, "Define Critical Activities" shall be set to "Longest Path" (as opposed to "Total Float less than or equal to").
f. Any deviations/change from these logic specifications require written request to be reviewed for acceptance from the Architect and Owner prior-to implementation.

1.7 UPDATING SCHEDULES

A. Monthly Schedule Updates shall accompany the monthly Application for Payment, reflecting progress since the previous month's submittal.

1. Two (2) 8 ½ x 11-inch copies of the Bar Chart, along with two (2) electronic copies containing PDF and XER files, in the scheduling software format, containing the Monthly Schedule Update, in addition to the Updated Cash Flow Progress Curve. The Bar Chart will be sorted as noted in Section 01310B-1.5. Email the PDF and XER file to the Owner.

B. The Schedule Update shall show the actual status of all activities. All activities that have a percentage less than 100% shall have a remaining duration in whole one (1) day increments. In addition, activities having a remaining duration of zero cannot be

claimed as less than 100% complete. Refer to Part 1.8 for revisions to the Schedule.

C. Actual Start and Finish dates shall not be automatically updated by default mechanisms that may be included in the CPM scheduling software system. Actual Start and Actual Finish dates on the CPM schedule shall match the dates of actual work accomplished in the field and not on projected completion dates.

D. With each monthly update schedule submission, the Contractor shall submit a narrative report including descriptions of any problem areas, current or anticipated delays and their estimated schedule impacts, and the Contractor's plan to mitigate any of these noted delays. The Contractor shall provide explanation for any delay(s) shown in the schedule updates. If the Contractor should require the addition or deletion of any activity, require a revision(s) to the approved schedule logic, or any other change to the approved schedule, the Contractor shall include a narrative explaining why these revisions are necessary and the anticipated impact to the schedule and Contractual Substantial Completion Date.

E. The Contractor shall provide a computer-generated Log Report in digital format using Claim Digger, Schedule Analyzer Pro, or other recognized schedule comparison software, listing ALL changes made between the previously reviewed monthly schedule update and the current monthly schedule update. Identify the name of the Baseline Schedule, previous schedule and name of the current schedule being compared.

1.8 SCHEDULE REVISIONS

A. Updating the schedule to reflect actual progress made up to the data date of a schedule update shall not be considered revisions to the Baseline Schedule.

B. During the progression of the project, if it appears the Monthly Update Schedule no longer represents the actual prosecution of the work as reflected in the Baseline Schedule, the Architect or Owner may request a Revised Baseline Schedule from the Contractor. The revision shall address the Contractor's current construction plan for completing the work without impacting contract time and cost. Approved revisions to the Monthly Schedule Update shall then be incorporated into the previously approved Baseline Schedule. The Revised Baseline Schedule shall them be used as the Primary Baseline Schedule for all subsequent monthly schedule update submissions.

C. The Contractor may also request revisions to the construction schedule logic and activities in the event the Contractor's planning for the work is revised. If the Contractor desires to make changes in the construction schedule to reflect revisions in its method of operating and scheduling of the work, the Contractor shall provide the Architect and Owner the reason(s) for the proposed revisions. The request shall address the Contractor's current construction plan for completing the work without impacting contract time and cost. Accepted revisions to the schedule shall be incorporated into a Revised Baseline Schedule and the current construction schedule at the next Monthly Schedule Update submission.

D. If the Architect or Owner recognizes at any time that the work has fallen sufficiently behind the scheduled Contractual Contract Completion Date, milestones, or phase dates, the Architect or Owner shall require the Contractor to submit a Recovery Schedule. The Contractor shall submit the Recovery Schedule within seven (7) calendar days of the Architect's/Owner's written request. The Contractor will include a narrative with the Recovery Schedule that will describe the Contractors work plan, including all additional resources, materials, equipment, labor, and modifications of operations which will be provided so as to meet the Contractual Substantial Completion Date. The Contractor will provide all such additional resources and modifications of operations without additional cost to the Owner. Such additional resources and modifications may include but not be limited to:

1. Required overtime for the Contractor's personnel.

2. Increased construction manpower in such quantities as will substantially eliminate the backlog of work and put the project back on schedule.

3. Increase numbers of shifts per working day, working days per week, or the amount of construction equipment, or any combination of the foregoing which will put the project back on schedule.

4. Reschedule activities to achieve the maximum practical concurrence of accomplishment of activities to put the project back on schedule.

5. Supplemental progress schedules detailing the specific operation changes instituted to regain the Contract Schedule.

The Contractor will implement the Recovery Schedule without additional cost to the Owner and provide for completion of the work in accordance with the remaining milestone dates without a time extension. Should the logic and/or durations of the Recovery Schedule not receive acceptance of the Architect and Owner, the Contractor is responsible to use concurrent operations, additional manpower, additional shifts, overtime, etc., including 24-hour production work day, seven (7) day work week operation, as required to put the Project back on schedule at no additional cost to the Owner.

E. Use of float suppression techniques, such as:

1. Preferential sequencing (arranging critical path through activities Owner and/or Architect related activities) using:

    a. Special lead/lag logic restraints,
    b. Zero total or free float constraints except where otherwise noted,
    c. Imposing constraint dates other than as required by the contract,

shall be cause for rejection of the project schedule or its updates. The use

of resource Leveling (or similar software features) used for the purpose of artificially adjusting activity durations to consume float and influence the critical path is expressly prohibited.

F. Definitions of Float or Slack

1. Free Float is the length of time the start of an activity can be delayed without delaying the start of a successor activity.

2. Total Float is the length of time along a given network path that the actual start and finish of activity(s) can be delayed without delaying the project completion date.

3. Positive Total Float is for the benefit of the Project and for the mutual use of the Owner and the Contractor.

G. Negative float will not be a basis for requesting time extensions. Any extension of time will be addressed in accordance with the Section 01310B "Time Extensions".

1.9 TIME EXTENSIONS

A. Extensions of time to the Contract may be granted only for delays to activities on the critical path that actually delay the Project completion beyond the Contractual Substantial Completion date or for delays to activities that transform that activity onto the critical path, and, as a result, delay completion beyond Contractual Substantial Completion date.

B. For any period in which a delay to the contract specified Milestones and/or Contractual Substantial Completion is anticipated by the Contractor, a Time Impact Analysis (TIA) shall be submitted in accordance with Contract Documents to the Architect and Owner. Each TIA shall include a detailed Network Diagram demonstrating where the Contractor proposes to incorporate the delay in the most current approved Monthly Update Schedule. The TIA shall show all the current activities affected by the delay and the proposed activity logic relationships caused by the delay. The TIA network diagram shall have a minimum of one (1) current accepted Monthly Update Schedule predecessor and successor. The TIA shall demonstrate the time impact based on the date the delay is noticed by the Contractor or the date the delay began; the Project Status of all construction at that specific point in time; and the event time computation of all affected activities. The event times used in the TIA shall be substantiated by actual dates of occurrence. Included in the Contractor's TIA shall be a detailed narrative report providing the rationale or basis of entitlement used in developing the TIA request. The preparation of the TIA is considered part of the construction process and will be performed at no additional cost to the Owner.

C. Time Impact Analysis shall be used by the Owner in determining if a time extension or reduction to the contract milestone date(s) is justified. The

Contractor may provide a TIA to the Owner for any contract change or as support for a Value Engineering Proposal.

1. The Contractor shall submit a TIA illustrating the influence of a change or delay to the Contractual Substantial Completion Date or milestones. All TIA's submitted shall utilize the most recently approved Monthly Schedule Update logic to demonstrate the impact(s) or delay(s) alleged to have affected the Contractual Substantial Completion date.

2. Each TIA shall include a Fragmentary Network (Fragnet) demonstrating how the Contractor proposes to incorporate the impact into the Project Schedule. A Fragnet is defined as the sequence of new activities and/or activity revisions, logic relationships and resource changes that are proposed to be added to the most recently approved Monthly Construction Schedule Update at the time of the alleged impact to demonstrate the influence of impacts to the accepted schedule logic. The Fragnet shall identify the predecessors to the new activities and demonstrate the impacts to successor activities. Include a narrative report describing the effects of new activities and relationships to interim and contract completion dates. The TIA shall include an electronic copy (both PDF and XER) of the TIA Network Diagram and Fragnet.

3. If the TIA was submitted as support for a change order request, following the Contractor's receipt of an executed Change Order, the activity data and logic relationships in the TIA shall be incorporated into the most current Monthly Schedule Update.

D. Each Time Impact Analysis shall demonstrate the estimated time impact based on the events of delay, the date the Change Order was given to the Contractor, the Actual Project status of construction at that point in time.

E. Following the receipt of an executed Change Order, the activity data and logic relationships in the TIA shall also be incorporated into the current accepted Monthly Update Schedule. All TIA Activities shall be coded in a manner that they can be identified to the specific Change Order and TIA.

F. Seasonal weather conditions shall be considered and included in the planning and scheduling of all work influenced by wind, cold or warm weather, and/or precipitation to ensure completion of all work within the Contract time.

If all the work, or the portion(s) of the work which are the currently controlling operation(s), are suspended for weather so as not to prosecute the work, a time extension at the Owners discretion, **may be awarded if the following conditions are satisfied:**

a. The weather shall actually be the delay to the Substantial Completion Date of the project and the delay must be beyond the control and without the fault or negligence of Contractor; **and either:**

b. The weather recorded by NOAA / NWS (WS Form: F6) website: (www.weather.gov/climate/index), Reno location during the Contract period shall be found to occur more frequently than the weather normally recorded by NOAA / NWS to be anticipated in Reno, Nevada, **OR;** documented more frequently occurring than 3 Year NOAA / NWS (WS Form: F6) Averages for all project locations; or

c. Owner/Architect orders the stoppage or suspension of the work in the interest of public safety or health or due to specification requirements.

Weather is defined for the purposes of this Contract to be compared to current recorded National Oceanic and Atmospheric Administration (NOAA) / National Weather Service Preliminary Local Climatological Data (WS FORM: F-6) for Station: Reno, Nevada, as follows:

- **PRECIPITATION** water equivalent of greater than or equal to 0.1 inch recorded for the 24-hour period of the date, and /or
- **AVERAGE** wind speed of greater than or equal to 20 miles per hour recorded for the 24-hour period for the date of occurrence. **NOT** 2 Minute Sustained or Gusts as recorded in (WS FORM:F6).

The following schedule of anticipated weather delays is based on current National Oceanic and Atmospheric Administration (NOAA) / National Weather Service (NWS) records kept as Preliminary Local Climatological Data (WS FORM: F-6) for Station: Reno, Nevada, (e.g. 3 Year NOAA / NWS (WS Form: F6) Averages) for all project locations **and will constitute the baseline for the total Contract Time weather delay evaluations.** Contractor's CPM schedule shall be understood to include as a minimum, this amount of weather delay days lost in all Contractors' weather dependent activities occurring during the following schedule.

CONTRACT INCLUDED MONTHLY TOTALS OF NON-WORK DAYS FOR WEATHER CONDITIONS AS DEFINED ABOVE
Based On Five-Day Work Week

JAN	FEB	MAR	APR	MAY	JUN	JUL	AUG	SEP	OCT	NOV	DEC
4	4	3	2	1	0	0	1	1	2	3	4

Contractor, or their authorized representative, shall provide specific written notification with documented backup to both, Owner's designated Project Manager and Architect designated Project Manager, on Company letterhead of the occurrence of qualifying precipitation and/or average wind speeds and the resultant full day(s) impact to normally scheduled workdays, within ten (10) calendar days of each occurrence of qualifying weather, whereby preventing

work on current critical activities for fifty (50) percent or more of Contractor's normal scheduled workday hours. The Contractor written notice will provide contemporaneously documented information concerning date, work Activities scheduled to be worked, the hours worked for all employees and subcontractors, and time qualifying weather conditions occurred. A Time Extension may be granted when the number of actual weather days calculated from the Notice to Proceed date to the date Contractor asserts the request exceeds the total cumulative non-work weather days using the above schedule for the same calendar time period. If Contractor wishes to assert additional claim(s) for time adjustment at a later date(s), each succeeding claim must address the time period from NTP date to the date of the request. No compensation will be made for monetary damages including, but not limited to extended General Conditions, due to weather delay(s).

The clear intent of this Contract Weather provision is to establish that the Contractor & Owner/Architect agree that a predetermined weather lost time has been accounted for in the Bid and accepted Baseline Schedule. Each Project has been determined to have a specific number of Contract Weather Days. Contractors are to make their own determination at time of bid and scheduling weather sensitive work activities as to incidental time for but not limited to (e.g., wet conditions, muddy site, etc.) time lost due to an accepted qualifying weather event as described above. The Contractor is responsible to provide a weatherized Project site at no additional cost or time to the Owner, including but not limited to, work and/or materials protected, temporary site drainage, and SWPP / Dust Control.

The Project's total Weather Days accounted for in Contractor's schedule is to be calculated using the schedule CONTRACT INCLUDED MONTHLY TOTALS OF NON-WORKDAYS. The mathematical calculation will take the actual NTP date of this Contract and prorate the remaining days of the beginning month as a percentage of the month. This percentage is then multiplied by the Non-Work Weather days from the Monthly Total – Non-Work schedule, to arrive at a rounded whole number for that month, should the NTP not be on the 1st day of the month. The same pro-rata will be done for the Substantial Completion date of the Contract. All months in between use the Totals given in the Non-Work Weather Days schedule for the same calendar period of this Contract. A grand total of impact days lost would be the cumulative sum of each month starting with the NTP Date and running through the Project Substantial Completion Date.

This total number of impact / lost days will be agreed by all parties to be the "CONTRACT INCLUDED MONTHLY TOTALS OF NON-WORKDAYS", which has already been included and accounted for in this Contract. It is this specific number, that the Contractor and Owner / Architect will use as baseline weather day work impacts for the Project calendar period of time. Any Contractor claims for lost days of work due to weather events as defined herein shall be totaled for the entire project and subtracted from the "CONTRACT INCLUDED MONTHLY TOTALS OF NON-WORKDAYS." It is understood that the impact day(s) claimed by the Contractor, must meet the requirements set forth in Section 1.9.G above. Until the Contract Weather Impact Days that have met the specification requirements have been used by deducting each qualifying event from the overall Project Total Days, the Owner / Architect will not consider time extensions for weather impacts. This Contract is a calendar day contract with a specific Notice to Proceed date and a Project Substantial Completion date. The Contractor will choose to use whatever

schedule work calendar they want as far as workdays per calendar week (e.g., 5-day work week, 6-day work week) when a Baseline Schedule is submitted for acceptance. Should the Contractor choose to utilize a work calendar other than a 5 day per week work schedule, per the CONTRACT INCLUDED MONTHLY TOTALS OF NON-WORKDAYS will have to be recalculated to match the actual working conditions planned. Any planned schedule requiring a re-calculation of the CONTRACT INCLUDED MONTHLY TOTALS OF NON-WORKDAYS, require Owner acceptance.

Only after the cumulative total "CONTRACT INCLUDED MONTHLY TOTALS OF NON-WORKDAYS" are exceeded by qualifying days previously accepted, the Owner / Architect may grant time extensions to the Contract Substantial Completion Date for additional qualifying Weather Impact Days accepted. CONTRACT INCLUDED MONTHLY TOTALS OF NON-WORKDAYS will be contemporaneously kept by Owner/Architect during the project duration as they are provided by Contractor for acceptance. Project Impact Days accepted to date, will be memorialized in regularly scheduled project meetings by the Owner PM/Architect PM. Contract Time Extensions granted by Owner will be in accordance with Section 01310, Article 1.9 of Project Manual. CPM Schedule changes can only be made with Owner Project Manager approval.

The Contractor shall provide an activity in the schedule reflecting the "CONTRACT INCLUDED MONTHLY TOTALS OF NON-WORKDAYS" that is
included as a result of a calculation from the above schedule for the overall Contract Time from the date of NTP to the date of Substantial Completion. This activity shall have a description of "CONTRACTOR'S NON-WORKDAYS BANK OF TIME." This activity shall be logically tied to the Contractual Substantial Completion as described in Section 1.6 Article B (a through e) along with Section
1.6 Article B (i) – (xiii) and shall be a BANK of time that the Contractor shall draw from as "CONTRACT INCLUDED MONTHLY TOTALS OF NON-WORKDAYS" are approved by Owner / Architect. When a NON-WORK Weather Event as defined above is accepted, the Contractor shall at the discretion of the Owner PM
/ Architect PM, submit a Time Impact Analysis as follows and reduce the allowance with the corresponding amount of NON-WORK delay time granted. Upon acceptance of a Non-Work Weather Day by Owner PM/Architect PM, the Contractor shall utilize the P3 function of "suspend and resume" within the dates function on the Critical Activity determined to be affected and if the accepted weather occurrences happen more than once on a Critical Activity, the Contractor will have to add an Activity as "Non-Work Weather Delay" with each predecessor(s) and successors being the "Critical Activity" so that the Critical Path runs through the Actualized Non-Weather time period and back onto the Critical Path of the Work Activity.

1.10 THREE WEEK LOOK-AHEAD SCHEDULE

A. The Contractor shall provide a three-week detailed short-interval schedule for each building or area of the Work, at regularly scheduled progress meetings. The format shall be satisfactory to the Owner and Architect. All schedules shall be based upon the most current Architect / Owner accepted Monthly Schedule Update and will indicate the actual progress achieved the previous week as well as the detailed activities scheduled for the next three weeks and will show anticipated durations, start and completion dates for activities.

END OF SECTION 01310B

SECTION 01400 – QUALITY CONTROL

PART 1 - GENERAL

1.1 RELATED DOCUMENTS

A. Drawings and general provisions of the Contract, including all contract documents and addendums associated with this project shall apply to this section.

1.2 SUMMARY

A. This section includes administrative and procedural requirements for quality control services.

B. Quality control services include inspections, tests and related actions, including reports performed by the Contractor, by independent agencies and by governing authorities. They do not include contract enforcement activities performed by the Architect.

C. Inspection and testing services are required to verify compliance with requirements specified or indicated. These services do not relieve the Contractor of responsibility for compliance with contract document requirements.

D. Requirements of this section relate to customized fabrication and installation procedures, not production of standard products.

1. Specific quality control requirements for individual construction activities are specified in the sections that specify those activities. Requirements in those sections may also cover production of standard products.

2. Specified inspections, tests and related actions do not limit the Contractor's quality control procedures that facilitate compliance with contract document requirements.

3. Requirements for the Contractor to provide quality control services required by the Architect, Owner or Authorities Having Jurisdiction (AHJ) are not limited by provisions of this section.

E. Related Sections: The following sections contain requirements that relate to this section:

1. Division 1 SECTION 01045 – CUTTING AND PATCHING specifies requirements for repair and restoration of construction disturbed by inspection and testing activities.

2. Division 1 SECTION 01300 – SUBMITTALS specifies requirements for development of a schedule of required tests and inspections.

1.3 RESPONSIBILITIES

A. Owners Responsibilities: Unless otherwise indicated as the responsibility of another identified entity, the Owner shall provide inspections, tests and other quality control services specified elsewhere in the contract documents and required by AHJ.

1. Where individual sections specifically indicate that certain inspections, tests and other quality control services are the Contractor's responsibility, the Contractor shall employ and pay a qualified independent testing agency to perform quality control services. Costs for these services are included in the contract sum.

2. Where individual sections specifically indicate that certain inspections, tests and other quality control services are the Owner's responsibility, the Owner will employ and pay a qualified independent testing agency to perform those services.

a. Where the Owner has engaged a testing agency for testing and inspecting part of the work and the Contractor is also required to engage an entity for the same or related element, the Contractor shall not employ the entity engaged by the Owner, unless agreed to in writing by the Owner.

B. Retesting: The Contractor is responsible for retesting where results of inspections, tests or other quality control services prove unsatisfactory and indicate non-compliance with contract document requirements, regardless of whether the original test was the Contractor's responsibility.

1. The cost of retesting construction, revised or replaced by the Contractor, is the Contractor's responsibility where required tests performed on original construction indicated non-compliance with contract document requirements.

C. Associated Services: Cooperate with agencies performing required inspections, tests and similar services and provide reasonable auxiliary services as requested. Notify the agency sufficiently in advance of operations to permit assignment of personnel. Auxiliary services required include, but are not limited to, the following:

1. Provide access to the work.

2. Furnish incidental labor and facilities necessary to facilitate inspections and tests.

3. Take adequate quantities of representative samples of materials that require testing or assist the agency in taking samples.

4. Provide facilities for storage and curing of test samples.

5. Deliver samples to testing laboratories.

6. Provide the agency with a preliminary design mix proposed for use for materials mixes that require control by the testing agency.

7. Provide security and protection of samples and test equipment at the project site.

D. Duties of the Testing Agency: The independent agency engaged to perform inspections, sampling and testing of materials and construction specified in individual sections shall cooperate with the Architect and the Contractor in performance of the agency's duties. The testing agency shall provide qualified personnel to perform required inspections and tests.

1. The agency shall notify the Architect and the Contractor promptly of irregularities or deficiencies observed in the work during performance of its services.

2. The agency is not authorized to release, revoke, alter or enlarge requirements of the contract documents or approve or accept any portion of the work.

3. The agency shall not perform any duties of the Contractor.

E. Coordination: Coordinate the sequence of activities to accommodate required services with a minimum of delay. Coordinate activities to avoid the necessity of removing and replacing construction to accommodate inspections and tests.

1. The Contractor is responsible for scheduling times for inspections, tests, taking samples and similar activities. The Contractor will also be responsible for standby charges from the Owner’s laboratory if they are due to a scheduling error by the Contractor.

1.4 SUBMITTALS

A. Unless the Contractor is responsible for this service, the independent testing agency shall submit a certified written report, in duplicate, of each inspection, test or similar service to the Architect. If the Contractor is responsible for the service, submit a certified written report, in duplicate, of each inspection, test or similar service through the Contractor.

1. Submit additional copies of each written report directly to the governing authority, when the authority so directs.

2. Report Data: Written reports of each inspection, test, or similar service include, but are not limited to, the following:

    a. Date of issue
    b. Project title and number
    c. Name, address and telephone number of testing agency
    d. Dates and locations of samples and tests or inspections
    e. Names of individuals making the inspection or test
    f. Designation of the work and test method
    g. Identification of product and specification section
    h. Complete inspection or test data
    i. Test results and an interpretation of test results
    j. Ambient conditions at the time of sample taking and testing
    k. Comments or professional opinion on whether inspected or tested work complies with the contract document requirements
    l. Name and signature of laboratory inspector
    m. Recommendations on retesting

1.5 QUALITY ASSURANCE

A. Qualifications for Service Agencies: Engage inspection and testing service agencies, including independent testing laboratories, that are prequalified as complying with the American Council of Independent Laboratories' *Recommended Requirements for Independent Laboratory Qualification* and that specialize in the types of inspections and tests to be performed.

1. Each independent inspection and testing agency engaged on the project shall be authorized by AHJ to operate in the State of Nevada.

PART 2 - PRODUCTS (Not Applicable)

PART 3 - EXECUTION

3.1 REPAIR AND PROTECTION

A. General: Upon completion of inspection, testing, sample taking and similar services, repair damaged construction and restore substrates and finishes. Comply with the contract document requirements for Division 1 SECTION 01045 – CUTTING AND PATCHING

B. Protect construction exposed by or for quality control service activities and protect repaired construction.

C. Repair and protection is the Contractor's responsibility, regardless of the assignment of responsibility for inspection, testing or similar services.

END OF SECTION 01400

SECTION 01420 – REFERENCES

PART 1 - GENERAL

1.1 DESCRIPTION

A. This section includes abbreviations and acronyms, additional definitions, and reference standards used in the contract documents.

B. Refer to Drawings and general provisions of the Contract, including all contract documents and addendums associated with this project for further information.

1.2 ABBREVIATIONS AND ACRONYMS

A. The following abbreviations and acronyms may be used in the contract documents. Refer uncertainties to the Architect for a decision before proceeding.

AA	Aluminum Association
AAADM	American Association of Automatic Door Manufacturers
AAMA	Architectural Aluminum Manufacturers' Association
AASHTO	American Association of State Highway and Transportation Officials
AATCC	American Association of Textile Chemists and Colorists
ACI	American Concrete Institute
ADA	Americans with Disabilities Act
AFPA	American Forest and Paper Association
AIA	American Institute of Architects
AIMA	Acoustical and Insulation Materials Association
AISC	American Institute of Steel Construction
AMCA	American Movement and Control Association
ANSI	American National Standards Institute
APA	The Engineered Wood Association (formerly the American Plywood Association)
ARI	Air Conditioning and Refrigeration
Institute ASA	American Standards Association
ASHRAE	American Society of Heating, Refrigerating, and Air- Conditioning Engineers
ASME	American Society of Mechanical Engineers
ASTM	American Society for Testing and Materials
AWI	Architectural Woodwork Institute
AWPA	American Wood Preservers' Association
AWWA	American Water Works Association AWS American Welding Society
BHMA	Builders Hardware Manufacturers' Association
BIA	Brick Institute of America
CAL/OSHA	State of California Construction Safety Orders

CALTRANS	State of California, Business and Transportation Agency, Department of Transportation, *Standard Specifications*
CCR	California Code of Regulations
CDA	Copper Development Association
CISCA	Ceilings and Interior Systems Construction Association
CFFA	Chemical Fabrics and Film Association, Inc.
CFMG	Cabinet and Fixture Manufacturers Guild
CLFMI	Chain Link Fence Manufacturers' Institute
CPA	Composite Panel Association (formerly the National Particleboard Association)
CRI	Carpet and Rug Institute
CRSI	Concrete Reinforcing Steel Institute
CPSC	United States Consumer Products Safety Commission
CS	Commercial Standard, United States Department of Commerce
CSA	Canadian Standards Association
DASMA	Door and Access Systems Manufacturers Association International
EIMA	EIFS Industry Members Association
EPA	Environmental Protection Agency
ESO	Electrical Safety Orders
FAA	Federal Aviation Administration, United States Department of Transportation
FCC	Federal Communications Commission
FGMA	Flat Glass Marketing Association (now the GANA)
FM	Factory Mutual System, Factory Mutual Engineering Corporation
FS	Federal Specification Unit
GA	Gypsum Association
GANA	Glass Association of North America (formerly the Flat Glass Marketing Association and Glass Tempering Association)
GRI	Geosynthetic Research Institute
GTA	Glass Tempering Association (now the GANA)
HMA	Hardwood Manufacturers Association
HPMA	Hardwood Plywood Manufacturers Association
HPVA	Hardwood Plywood and Veneer Association
HUD	United States Department of Housing and Urban Development
IEEE	Institute of Electrical and Electronic Engineers
IGCC	Insulating Glass Certification Council
ITS-WH	Intertek Testing Service - Warnock Hersey
LSGA`	Laminator's Safety Glass Association

MIA	Marble Institute of America or the Masonry Institute of America
MIL	Military Standardization Document, United States Department of Defense
MIW	Masonry Institute of Washington
ML/SFA	Metal Lath/Steel Framing Association
MM	"Materials Manual", State of California, Business and Transportation Agency, Department of Transportation
NAAMM	National Association of Architectural Metal Manufacturers
NBGQA	National Building Granite Quarries Association, Inc.
NBS	National Bureau of Standards (now the NIST)
NCMA	National Concrete Masonry Association
NEC	National Electrical Code
NEMA	National Electric Manufacturers' Association
NFPA	National Fire Protection Association
NFPA	National Forest Products Association (now the AFPA)
NFRC	National Fenestration Rating Council
NHLA	National Hardwood Lumber Association
NIST	National Institute of Standards and Technology, United States Department of Commerce (formerly the National Bureau of Standards)
NOFMA	National Oak Flooring Manufacturers Association
NPDES	National Pollutant Discharge Elimination System
NRCA	National Roofing Contractors Association
NSF	NSF International (formerly National Sanitary Foundation)
NTMA	National Terrazzo and Mosaic Association
NWWDA	National Wood Window and Door Association (now WDMA)
OSA	Office of the State Architect, State of California
OSHPD	Office of Statewide Health Planning and Development, State of California
PCI	Precast / Prestressed Concrete Institute
PS	Product Standard, United States Department of Commerce
RCW	Revised Code of Washington, State of Washington
RIS	Redwood Inspection Service
SDI	Steel Deck Institute or the Steel Door Institute SFM Office of State Fire Marshal, State of California
SIGMA	Sealed Insulated Glass Manufacturer's Association
SMACNA	Sheet Metal and Air Conditioning Contractors National Association
SSPC	Society for Protective Coatings (formerly the Steel Structures Painting Council)
SWI	Steel Window Institute
TCA	Tile Council of America

UBC	Uniform Building Code
UFC	Uniform Fire Code
UL	Underwriters Laboratories, Inc.
UMC	Uniform Mechanical Code
UPC	Uniform Plumbing Code
USPS	United States Postal Service
USS	United States Standard
WAC	Washington Administrative Code, State of Washington
WCLIB	West Coast Lumber Inspection Bureau
WDMA	Window and Door Manufacturers Association (formerly the National Wood Window and Door Association)
WIC	Woodwork Institute of California
WLPDIA	Western Lath Plaster /Drywall Industries Association (now the WWCCA)
WSDOT	Washington State Department of Transportation
WWCCA	Western Wall & Ceiling Contractors Association
WWPA	Woven Wire Products Association or Western Wood Products Association

B. Additional abbreviations, used only on the drawings, are listed and defined thereon.

USE SECTION 1.03 ONLY IF THESE DEFINITIONS ARE NOT INCLUDED IN THE GENERAL CONDITIONS FOR THE SPECIFIC CONTRACT.

1.03 ADDITIONAL DEFINITIONS

A. In addition to the terms defined in the General Conditions, the following terms are used in the contract documents and are defined as follows:

Accepted Equal	As accepted by the Architect as being of equivalent quality, utility and appearance.
Addenda	Written or graphic instruments issued by the Owner/Architect prior to the execution of the Contract which modify or interpret the bidding documents by additions, deletions, clarifications or corrections.
By Owner	Work on this project that will be performed by the Owner or its agents, at the Owner's cost.
By Others	Work on this project that is outside the Scope of Work to be performed by the Contractor under this Contract, but that will be performed by the Owner, other contractors or other means.
Consultant	A consultant to the Architect
Directed	Directed by the Architect
Furnish	Supply only; do not install
Indicated	As shown and/or noted on the drawings
Install	Install or apply only; do not furnish
Owner-Furnished, Contractor-Installed	The Owner will furnish at their cost and the Contractor shall install under their contract for this work.

Project Manual	The Project Manual consists of two volumes: Volume 1 includes the bidding and contract requirements and Specifications; and Volume 2 includes the details and schedules. One volume which includes the bidding and contract requirements and specifications and the details and schedules.
Provide	Furnish and install
Site	Geographical location of the project
Specified	As written in the specifications

1.4 REFERENCE STANDARDS

A. Specified standards of the construction industry shall have the same force and effect on the performance of the work as if bound or copied directly into the contract documents. Such standards are made a part of the contract documents by reference.

B. Each entity or person engaged in the work shall be familiar with the industry standards applicable to its construction activity.

C. Where compliance with two (2) or more standards is specified and the standards establish different or conflicting requirements for minimum qualities or quality levels, comply with the most stringent requirement. Refer uncertainties and requirements that are different, but apparently equal, to the Architect for a decision before proceeding.

D. Copies of applicable standards are not bound with the contract documents. Where copies are required for proper performance of the work, obtain and pay for authorized copies directly from publication source and maintain at the site during submittals, planning and performance of work until final acceptance by the Owner. Make such copies of standards available to the Owner and Architect for review upon request.

E. For products or quality of installation specified by association, trade, military, federal or other reference standards, comply with requirements of the standard, except when more rigid requirements are specified in the contract documents or are required by applicable codes and/or public Authorities Having Jurisdiction (AHJ).

1. Except as otherwise indicated or specified, where compliance with a reference standard is required, comply with the standard in effect as of the date established for the receipt of bids. Where a reference standard has been revised and reissued after the date established for the receipt of bids and before performance of the work affected, notify the Architect in writing and request a decision on how to proceed. The Architect may issue a contract modification or an Architect's Supplemental Instruction (ASI) for proceeding in accordance with the updated standard.

2. The contractual relationship of the parties to the Contract shall not be altered from the contract documents by mention or inference otherwise in a reference standard. The provisions of the bidding requirements; contract documents including, but not limited to all issued addendums; and the Contract shall void the general, but not technical, provisions of a reference standard in conflict therewith.

PART 2 – PRODUCTS (Not Used)

PART 3 – EXECUTION (Not Used)

END OF SECTION 01420

SECTION 01500 – CONSTRUCTION FACILITIES AND TEMPORARY CONTROLS

PART 1 – GENERAL

1.1 RELATED DOCUMENTS

A. Drawings and general provisions of the Contract, including all bid documents and addendums associated with this project shall apply to this section.

1.2 SUMMARY

A. This section includes requirements for construction facilities and temporary controls, including temporary utilities, support facilities, and security and protection.

B. Temporary utilities include, but are not limited to, the following:

1. Water service and distribution
2. Temporary electric power and light
3. Temporary heat
4. Ventilation
5. Telephone service
6. Sanitary facilities, including drinking water
7. Storm and sanitary sewer

C. Support facilities include, but are not limited to, the following:

1. Field offices and storage sheds
2. Temporary roads and paving
3. Dewatering facilities and drains
4. Temporary enclosures
5. Hoists and temporary elevator use
6. Temporary project identification signs and bulletin boards
7. Waste disposal services
8. Rodent and pest control

9. Construction aids and miscellaneous services and facilities

D. Security and protection facilities include, but are not limited to, the following:

1. Temporary fire protection

2. Barricades, warning signs, and lights

3. Sidewalk bridge or enclosure fence for the site

4. Environmental protection

1.3 SUBMITTALS

A. Temporary Utilities: Submit reports of tests, inspections, meter readings, and similar procedures performed on temporary utilities.

B. Implementation and Termination Schedule: Within fifteen (15) days of the date established for commencement of the work, submit a schedule indicating implementation and termination of each temporary utility.

1.4 QUALITY ASSURANCE

A. Regulations: Comply with industry standards and applicable laws and regulations of authorities having jurisdiction including, but not limited to, the following:

1. Building code requirements

2. Health and safety regulations

3. Utility company regulations

4. Police, Fire Department, and rescue squad rules

5. Environmental protection regulations

B. Standards: Comply with NFPA "Standard for Safeguarding Construction, Alterations, and Demolition Operations"; ANSI A10 Series standards for "Safety Requirements for Construction and Demolition"; and NECA Electrical Design Library "Temporary Electrical Facilities".

1. Electrical Service: Comply with NEMA, NECA, UL Standards and regulations for temporary electric service. Install service in compliance with NFPA "National Electric Code".

C. Permit and Inspections: Arrange for authorities having jurisdiction to inspect and test each temporary utility before use. Obtain required certifications and permits, including all design and permit cost.

1.5 PROJECT CONDITIONS

A. Temporary Facilities: Field Offices, utility, and support infrastructure shall be installed no later than 30 days from NTP.

B. Temporary Utilities: Prepare a schedule indicating dates for implementation and termination of each temporary utility. At the earliest feasible time, when acceptable to the Owner change over from use of temporary service to use of permanent service.

C. Conditions of Use: Keep temporary services and facilities clean and neat in appearance. Operate in a safe and efficient manner. Relocate temporary services and facilities as the work progresses. Do not overload facilities or permit them to interfere with progress. Take necessary fire-prevention measures. Do not allow hazardous, dangerous, or unsanitary conditions, or public nuisances to develop or persist on-site.

D. Project Identification and Signs: Provide within 30 days of NTP, and maintain for the life of the project, a project identification sign of the design, text and colors designated by the Architect, locate sign as approved by the Owner. Signs other than the specified sign will not be permitted, unless otherwise approved in advance by the Owner.

PART 2 – PRODUCTS

2.1 MATERIALS

A. General: Provide new materials. If acceptable to the Architect, the Contractor may use undamaged, previously used materials in serviceable condition. Provide materials suitable for use intended.

B. Lumber and Plywood: Comply with requirements in Division 6 Section "Rough Carpentry."

1. For job-built temporary offices, shops, and sheds within the construction area, provide UL-labeled, fire-treated lumber and plywood for framing, sheathing, and siding.

2. For signs and directory boards, provide exterior-type, Grade B-B high-density concrete form overlay plywood of sizes and thickness indicated.

3. For fences and vision barriers, provide minimum 3/8-inch (9.5-mm-) thick exterior plywood.

4. For safety barriers, sidewalk bridges, and similar uses, provide minimum 5/8-inch - (16-mm-) thick exterior plywood.

C. Gypsum Wallboard: Provide gypsum wallboard on interior walls of temporary offices.

D. Roofing Materials: Provide UL Class A standard-weight asphalt shingles or UL Class C mineral - surfaced roll roofing on roofs on job-built temporary offices, shops, and sheds.

E. Paint: Comply with requirements of Division 9 Section “Painting.”

1. For job-built temporary offices, shops, sheds, fences, and other exposed lumber and plywood, provide exterior-grade acrylic-latex emulsion over exterior primer.

2. For sign panels and applying graphics, provide exterior-grade alkyd gloss enamel over exterior primer.

3. For interior walls of temporary offices, provide 2 coats interior latex-flat wall paint.

F. Tarpaulins: Provide waterproof, fire-resistant, UL-labeled tarpaulins with flame-spread rating of 15 or less. For temporary enclosures, provide translucent, nylon-reinforced, laminated polyethylene or polyvinyl chloride, fire-retardant tarpaulins.

G. Water: Provide potable water approved by local health authorities.

H. Open-Mesh Fencing: Provide 1.120-inch- (3-mm-) thick, galvanized 2- inch (50-mm-) chain-link fabric fencing 6 feet (2 m) high and galvanized steel pip posts, 1-1/2 inches (38 mm) I.D. for line posts and 2-1/2 inches (64 mm) I.D. for corner posts.

2.2 EQUIPMENT

A. General: Provide new equipment. If acceptable to the Architect, the Contractor may use undamaged, previously used equipment in serviceable condition. Provide equipment suitable for use intended.

B. Water Hoses: Provide 3/4-inch (19-mm-) heavy duty, abrasion-resistant, flexible rubber hoses 100 feet (30 m) long, with pressure rating greater than the maximum pressure of the water distribution system. Provide adjustable shutoff nozzles at hose discharge.

C. Electrical Outlets: Provide properly configured, NEMA-polarized outlets to prevent insertion of 110- to 120- Volt plugs into higher voltage outlets. Provide receptacle outlets equipped with ground-fault circuit interrupters, reset button, and pilot light for connection of power tools and equipment.

D. Electrical Power Cords: Provide grounded extension cords. Use hard- service cords where exposed to abrasion and traffic. Provide waterproof

connectors to connect separate lengths of electric cords if single lengths will not reach areas where construction activities are in progress. Do not exceed safe length-voltage ratio.

E. Lamps and Light Fixtures: Provide general service incandescent lamps of wattage required for adequate illumination. Provide guard cages or tempered-glass enclosures where exposed to breakage. Provide exterior fixtures where exposed to moisture.

F. Heating Units: Provide temporary heating units that have been tested and labeled by UL, FM or another recognized trade association related to the type of fuel being consumed.

G. Temporary Offices: Provide prefabricated or mobile units or similar job- built construction with lockable entrances, operable windows, and serviceable finishes. Provide heated and air-conditioned units on foundations adequate for normal loading. A separate temporary office with its own utilities is to be provided for City of Fernley personnel.

H. Temporary Toilet Units: Provide self-contained, single-occupant toilet units of the chemical, aerated recirculation, or combustion type. Provide units properly vented and fully enclosed with a glass-fiber-reinforced polyester shell or similar nonabsorbent material.

I. Fire Extinguishers: Provide hand-carried, portable, UL-rated, Class A fire extinguishers for temporary offices and similar spaces. In other locations, provide hand-carried, portable, UL-rated, Class ABC, dry-chemical extinguishers or a combination of extinguishers of NFPA-recommended classes for the exposures.

1. Comply with NFPA for classification, extinguishing agent, and size required by location and class of fire exposure.

PART 3 – EXECUTION

3.1 INSTALLATION

A. Use qualified personnel for installation of temporary facilities. Locate facilities where they will serve the project adequately and result in minimum interference with performance of the work. Relocate and modify facilities as required.

B. Provide each facility ready for use when needed to avoid delay. Maintain and modify as required. Do not remove until facilities are no longer needed or are replaced by authorized use of completed permanent facilities.

3.2 TEMPORARY UTILITY INSTALLATION

A. General: Engage the appropriate local utility company to install temporary service or connect to existing service. Where company provides only part of the service, provide the remainder with matching, compatible materials and equipment. Comply with company recommendations.

1. Arrange with company and existing users for a time when service can be interrupted, if necessary, to make connections for temporary services.

2. Provide adequate capacity at each stage of construction. Prior to temporary utility availability, provide trucked-in services.

3. Obtain easements to bring temporary utilities to the site where the Owner's easement cannot be used for that purpose.

4. Use Charges: Cost or use charges for temporary facilities are not chargeable to the Owner or Architect. Neither the Owner nor Architect will accept cost or use charges as a basis of claims for Change Orders.

B. Water Service: Install water service and distribution piping of sizes and pressures adequate for construction until permanent water service is in use.

1. Sterilization: Sterilize temporary water piping prior to use.

C. Temporary Electric Power Service: Provide weatherproof, grounded electric power service and distribution system of sufficient size, capacity, and power characteristics during construction period. Include meters, transformers, overload-protected disconnects, automatic ground-fault interrupters, and main distribution switch gear.

1. Install electric power service underground, except where overhead service must be used.

2. Power Distribution System: Install wiring overhead and rise vertically where least exposed to damage. Where permitted, wiring circuits not exceeding 125 Volts, ac 20 Ampere rating, and lighting circuits may be nonmetallic sheathed cable where overhead and exposed for surveillance.

D. Temporary Lighting: When overhead floor or roof deck has been installed, provide temporary lighting with local switching.

Install and operate temporary lighting that will fulfill security and protection requirements without operating the entire system. Provide temporary lighting that will provide adequate illumination for construction operations and traffic conditions.

1. Install and operate temporary lighting that will fulfill security and protection requirements without operating the entire system. Provide temporary lighting that will provide adequate illumination for construction operations and traffic conditions.

E. Temporary Heat: Provide temporary heat required by construction activities for curing or drying of completed installations or for protection of installed construction from adverse effects of low temperatures or high humidity. Select safe equipment that will not have a harmful effect on completed installations or elements being installed. Coordinate ventilation requirements to produce the ambient condition required and minimize consumption of energy

F. Heating Facilities: Except where the Owner authorizes use of the permanent system, provide vented, self-contained, LP-gas or fuel-oil heaters with individual space thermostatic control.

1. Use of gasoline-burning space heaters, open flame, or salamander heating units is prohibited.

G. Temporary Data/Telephones: Provide temporary service throughout the construction period for all personnel engaged in construction activities. Install a separate line for each temporary office and first-aid station.

1. Provide one data line including WIFI Access for computer access to the Owner's computer network in Owner's Project Representative Field Office and pay costs for installation maintenance service and removal.

H. Sanitary facilities include temporary toilets, wash facilities, and drinking-water fixtures. Comply with regulations and health codes for the type, number, location, operation, and maintenance of fixtures and facilities. Install where facilities will best serve the project's needs.

1. Provide toilet tissue, paper towels, paper cups, and similar disposable materials for each facility. Provide covered waste containers for used material.

I. Drinking-Water Faculties: Provide containerized, tap-dispenser, bottled-water drinking-water units, including paper supply.

1. Where power is accessible, provide electric water coolers to maintain dispensed water temperature at 45-to-55-degree F (7 to 13 degree C).

J. Sewers and Drainage: If sewers are available, provide temporary connections to remove effluent that can be discharged lawfully. If sewers are not available or cannot be used, provide drainage ditches, dry wells, stabilization ponds, and similar facilities. If neither sewers nor drainage

facilities can be lawfully used for discharge of effluent, provide containers to remove and dispose of effluent off-site in a lawful manner.

1. Filter out excessive amounts of soil, construction debris, chemicals, oils, and similar contaminants that might clog sewers or pollute waterways before discharge.

2. Connect temporary sewers to the municipal system, as directed by sewer department officials.

3. Maintain temporary sewers and drainage facilities in a clean, sanitary condition. Following heavy use, restore normal conditions promptly.

K. Provide earthen embankments and similar barriers in and around excavations and subgrade construction, sufficient to prevent flooding by runoff of storm water from heavy rains.

3.3 SUPPORT FACILITIES INSTALLATION

A. Locate field offices, storage sheds, and other temporary construction and support facilities for easy access.

1. Maintain support facilities until near Substantial Completion. Remove prior to Substantial Completion. Personnel remaining after Substantial Completion will be permitted to use permanent facilities, under conditions acceptable to the Owner.

B. Provide incombustible construction for offices, shops, and sheds located within the construction area or within 30 feet (9 m) of building lines. Comply with requirements of NFPA 241.

C. Field Offices: Provide insulated, weather tight temporary offices of sufficient size to accommodate required City of Fernley, Architect and Construction Coordinator office personnel at the project site. Keep the office clean and orderly for use of small progress meetings. Size, Furnish and equip offices as follow:

1. Provide two distinctly secured office spaces (minimum 120sf each) each with 6x6 L desk and chair, 4’ x 8’ plan table, plan rack, one (1) 6-shelf bookcase, tack board and dry erase board.

2. Provide 1 distinctly secured meeting space with conference table and chairs for minimum 12 personnel.

3. Equip with a water cooler and private toilet complete with water closet, lavatory, and medicine cabinet unit with a mirror.

4. Contractor to pay for all power, phone, data, fax, installations, set up, take down and monthly usage charges.

5. Sani-Hut to be placed by trailer.

D. Storage and Fabrication Sheds: Install storage and fabrication sheds sized, furnished, and equipped to accommodate materials and equipment involved, including temporary utility service. Sheds may be open shelters of fully enclosed spaces within the building or elsewhere on-site.

E. Temporary Paving: Construct and maintain temporary roads and paving to support the indicated loading adequately and to withstand exposure to traffic during the construction period. Locate temporary paving for roads, storage areas, and parking where the same permanent facilities will be located. Review proposed modifications to permanent paving with the Architect.

1. Paving: Comply with Division 2 Section "Hot-Mixed Asphalt Paving" for construction and maintenance of temporary paving.

2. Coordinate temporary paving development with subgrade grading, compaction, installation and stabilization of subbase, and installation of base and finish courses of permanent paving.

3. Install temporary paving to minimize the need to rework the installations and to result in permanent roads and paved areas without damage or deterioration when occupied by the Owner.

4. Delay installation of the final course of permanent asphalt concrete paving until immediately before Substantial Completion. Coordinate with weather conditions to avoid unsatisfactory results.

5. Extend temporary paving in and around the construction area as necessary to accommodate delivery and storage of materials, equipment usage, administration, and supervision.

F. Dewatering Facilities and Drains: For temporary drainage and dewatering facilities and operations not directly associated with construction activities included under individual Sections, comply with dewatering requirements of applicable Division 2 Sections. Where feasible, utilize the same facilities. Maintain the site, excavations, and construction free of water.

G. Temporary Enclosures: Provide temporary enclosures for protection of construction, in progress and completed, from exposure, foul weather, other construction operations, and similar activities.

1. Where heat is needed and the permanent building enclosure is not complete, provide temporary enclosures where there is no other provision for containment of heat. Coordinate enclosure with ventilating and material drying or curing requirements to avoid dangerous conditions and effects.

2. Install tarpaulins securely, with incombustible wood framing and other materials. Close openings of 25 sq. ft. (2.3 sq. m) or less with plywood or similar materials.

3. Close openings through floor or roof decks and horizontal surfaces with load bearing, wood-framed construction.

4. Where temporary wood or plywood enclosure exceeds 100 sq. ft. (9.2 sq. m) in area, use UL-labeled, fire-retardant-treated material for framing and main sheathing.

H. Temporary Lifts and Hoists: Provide facilities for hoisting materials and employees. Truck cranes and similar devices used for hoisting materials are considered "tools and equipment" and not temporary facilities.

I Temporary Exterior Lighting: Install exterior yard and sign lights so signs are visible when work is being performed.

J. Collection and Disposal of Waste: Collect waste from construction areas and elsewhere daily. Comply with requirements of NFPA 241 for removal of combustible waste material and debris. Enforce requirements strictly. Do not hold materials more than seven (7) days during normal weather or three (3) days when the temperature is expected to rise above 80 degrees F (27 deg C). Handle hazardous, dangerous, or unsanitary waste materials separately from other waste by containerizing properly. Dispose of material lawfully.

K. Rodent and Pest Control: Before deep foundation work has been completed, retain a local exterminator or pest control company to recommend practices to minimize attraction and harboring of rodents, roaches, and other pests. Employ this service to perform extermination and control procedures at regular intervals so the project will be free of pests and their residues at Substantial Completion. Perform control operations lawfully, using environmentally safe materials.

L. Stairs: Until permanent stairs are available, provide temporary stairs where ladders are not adequate. Cover finished permanent stairs with a protective covering of plywood or similar material so finishes will be undamaged at the time of acceptance.

3.4 SECURITY AND PROTECTION FACILITIES INSTALLATION

A. Except for use of permanent fire protection as soon as available, do not change over from use of temporary security and protection facilities to permanent facilities until Substantial Completion, or longer, as requested by the Architect.

B. Temporary Fire Protection: Until fire-protection needs are supplied by permanent facilities, install and maintain temporary fire-protection facilities

of the types needed to protect against reasonably predictable and controllable fire losses. Comply with NFPA 10 "Standard for Portable Fire Extinguishers" and NFPA 241 "Standard for Safeguarding Construction, Alterations, and Demolition Operations."

1. Locate fire extinguishers where convenient and effective for their intended purpose, but not less than one (1) extinguisher on each floor at or near each usable stairwell.

2. Store combustible materials in containers in fire-safe locations.

3. Maintain unobstructed access to fire extinguishers, fire hydrants, temporary fire-protection facilities, stairways, and other access routes for fighting fires. Prohibit smoking in hazardous fire-exposure areas.

4. Provide supervision of welding operations, combustion-type temporary heating units, and similar sources of fire ignition.

C. Permanent Fire Protection: At the earliest feasible date in each area of the project, complete installation of the permanent fire-protection facility, including connected services, and place into operation and use. Instruct key personnel on use of facilities.

D. Barricades, Warning Signs, and Lights: Comply with standards and code requirements for erection of structurally adequate barricades. Paint with appropriate colors, graphics, and warning signs to inform personnel and the public of the hazard being protected against. Where appropriate and needed, provide lighting, including flashing red or amber lights.

E. Enclosure Fence: Before excavation begins, install an enclosure fence with lockable entrance gates. Locate where indicated or enclose the entire site or the portion determined sufficient to accommodate construction operations. Install in a manner that will prevent people, dogs, and other animals from easily entering the site, except by the entrance gates.

1. Provide open-mesh, chain link fencing with posts set in Masonry blocks.

F. Security Enclosure and Lockup: Install substantial temporary enclosure of partially completed areas of construction. Provide locking entrances to prevent unauthorized entrance, vandalism, theft, and similar violations of security.

1. Storage: Where materials and equipment must be stored, and are of value or attractive for theft, provide a secure lockup. Enforce discipline in connection with the installation and release of material to minimize the opportunity for theft and vandalism.

G. Environmental Protection: Provide protection, operate temporary facilities, and conduct construction in ways and by methods that comply with environmental regulations, and minimize the possibility that air, waterways, and subsoil might be contaminated or polluted or that other undesirable effects might result. Avoid use of tools and equipment that produce harmful noise. Restrict use of noise-making tools and equipment to hours that will minimize complaints from persons or firms near the site.

3.5 OPERATION, TERMINATION, AND REMOVAL

A. Supervision: Enforce strict discipline in use of temporary facilities. Limit availability of temporary facilities to essential and intended uses to minimize waste and abuse.

B. Maintenance: Maintain facilities in good operating condition until removal. Protect from damage by freezing temperatures and similar elements.

1. Maintain operation of temporary enclosures, heating, cooling humidity control, ventilation, and similar facilities on a 24-hour basis where required to achieve indicated results and to avoid possibility of damage.

2. Protection: Prevent water-filled piping from freezing. Maintain markers for underground lines. Protect from damage during excavation operations.

C. Termination and Removal: Unless the Architect request that it be maintained longer, remove each temporary facility when the need has ended, when replaced by authorized use of permanent facility, or no later than Substantial Completion. Complete or, if necessary, restore permanent construction that may have been delayed because of interference with the temporary facility. Repair damaged work, clean exposed surfaces, and replace construction that cannot be satisfactorily repaired.

1. Materials and facilities that constitute temporary facilities are the Contractor's property. The Owner reserves the right to take possession of project identification signs.

2. Remove temporary paving not intended for or acceptable for integration into permanent paving. Where the area is intended for landscape development, remove soil and aggregate fill that do not comply with requirements for fill or subsoil in the area. Remove materials contaminated with road oil, asphalt and other petrochemical compounds, and other substances that might impair growth of plant materials or lawns. Repair or replace street paving, curbs, and sidewalks at the temporary entrances, as required by the governing authority.

3. At Substantial Completion, clean and renovate permanent facilities used during the construction period including, but not limited to, the following:

   a. Replace air filters and clean inside of ductwork and housing.

   b. Replace significantly worn parts and parts subject to unusual operating conditions.

   c. Replace lamps burned out or noticeably dimmed by hours of use.

END OF SECTION 01500

SECTION 01600 – MATERIALS AND EQUIPMENT

PART 1 – GENERAL

1.1 RELATED DOCUMENTS

A. Drawings and general provisions of the Contract, including all contract documents and addendums associated with this project shall apply to this section.

1.2 SUMMARY

A. This section includes administrative and procedural requirements governing the Contractor's selection of products for use in the project.

B. Related Sections: The following sections contain requirements that relate to this Section:

1. Division 1 SECTION 01420 - REFERENCES specifies the applicability of industry standards to products specified.

2. Division 1 SECTION 01300 – SUBMITTALS specifies requirements for submittal of the Contractor's construction schedule and the submittal schedule.

3. Division 1 SECTION 01631 – SUBSTITUTIONS specifies administrative procedures for handling requests for substitutions made after award of the contract.

1.3 DEFINITIONS

A. Definitions used in this section are not intended to change the meaning of other terms used in the contract documents such as *Specialties, Systems, Structure, Finishes, Accessories* and similar terms. Such terms are self- explanatory and have well recognized meanings in the construction industry.

1. *Products* are items purchased for incorporation in the work, whether purchased for the project or taken from previously purchased stock. The term *Product* includes the terms *Material, Equipment, System* and terms of similar intent.

a. *Named Products* are items identified by the Manufacturer's product name, including make and model number or other designation, shown or listed in the Manufacturer's published product literature that is current as of the date of the contract documents.

b. *Foreign Products* as distinguished from domestic products are items substantially manufactured fifty percent [(50%) or more of value]

outside the United States and its possessions. Products produced or supplied by entities substantially owned [more than fifty percent (50%)] by persons who are not citizens of, nor living within, the United States and its possessions.

2. *Materials* are products substantially shaped, cut worked, mixed, finished, refined or otherwise fabricated, processed or installed to form a part of the work.

3. *Equipment* is a product with operational parts, whether motorized or manually operated, that requires service connections, such as wiring or piping.

1.4 SUBMITTALS

A. Product List: A list of products required is included at the end of this section. Prepare a schedule in tabular form showing each product listed. Include the Manufacturer's name and proprietary product names for each item listed.

1. Coordinate product list with the Contractor's construction schedule and the schedule of submittals.

2. Form: Prepare product list with information on each item tabulated under the following column headings:

   a. Related Specification Section Number
   b. Generic name used in the contract documents
   c. Proprietary Name, Model Number and similar designations
   d. Manufacturer's Name and Address
   e. Supplier's Name and Address
   f. Installer's Name and Address
   g. Projected Delivery Date or time span of delivery period

3. Initial Submittal: Within thirty (30) days after date of commencement of the work, submit three (3) copies of an initial product list. Provide a written explanation for omissions of data and for known variations from the contract requirements.

   a. At the Contractor's option, the initial submittal may be limited to product selections and designations that must be established early in the contract period.

4. Completed List: Within sixty (60) days after date of commencement of work, submit three (3) copies of the completed product list. Provide a written explanation for omissions of data and for known variations from the contract requirements.

5. Architect's Action: The Architect will respond in writing to Contractor within two (2) weeks of receipt of the completed product list. No response

within this period constitutes no objection to listed manufacturers or products but does not constitute a waiver of the requirement that products comply with the contract documents. The Architect's response will include a list of unacceptable product selections containing a brief explanation of reasons for this action.

1.5 QUALITY ASSURANCE

A. Source Limitations: To the fullest extent possible, provide products of the same kind from a single source.

1. When specified products are available only from sources that do not, or cannot, produce a quantity adequate to complete project requirements in a timely manner, consult with the Architect to determine the most important product qualities before proceeding. Qualities may include attributes, such as visual appearance, strength, durability or compatibility. When a determination has been made select products from sources producing products that possess these qualities to the fullest extent possible.

B. Compatibility of Options: When the Contractor is given the option of selecting between two (2) or more products for use on the project, the product selected shall be compatible with products previously selected, even if previously selected products were also options.

1. Each Prime Contractor is responsible for providing products and construction methods that are compatible with products and construction methods of other prime or separate contactors.

2. If a dispute arises between Prime Contractors over concurrently selectable, but incompatible products, the Architect will determine which products shall be retained and which are incompatible and must be replaced.

C. Foreign Product Limitations: Except under one or more of the following conditions, provide domestic products, not foreign products, for inclusion in the work:

1. No available domestic product complies with the contract documents.

2. Domestic products that comply with the contract documents are available only at prices or terms substantially higher than foreign products that comply with the contract documents.

D. Nameplates: Except for required labels and operating data, do not attach or imprint manufacturers or producer's nameplate or trademarks on exposed surfaces of products that will be exposed to view in occupied spaces or on the exterior.

1. Labels: Locate required product labels and stamps on concealed surfaces, or where required for observation after installation, on accessible surfaces that are not conspicuous.

2. Equipment Nameplates: Provide a permanent nameplate on each item of service connected or power operated equipment. Locate on an easily accessible surface that is inconspicuous in occupied spaces. The nameplate shall contain the following information and other essential operating data:

    a. Name of Product and Manufacturer
    b. Model and Serial Number
    c. Capacity
    d. Speed
    e. Ratings

1.6 PRODUCT DELIVERY, STORAGE AND HANDLING

A. Deliver, store and handle products according to the Manufacturer's recommendations, using means and methods that will prevent damage, deterioration and loss, including theft.

1. Schedule delivery to minimize long term storage at the site and to prevent overcrowding of construction spaces.

2. Coordinate delivery with installation time to assure minimum holding time for items that are flammable, hazardous, easily damaged or sensitive to deterioration, theft and other losses.

3. Deliver products to the site in an undamaged condition in the manufacturer's original sealed container or other packaging system, complete with labels and instructions for handling, storing, unpacking, protecting and installing.

4. Inspect products upon delivery to ensure compliance with the contract documents and to ensure that products are undamaged and properly protected.

5. Store products at the site in a manner that will facilitate inspection and measurement of quantity or counting of units.

6. Store heavy materials away from the project structure in a manner that will not endanger the supporting construction.

7. Store products subject to damage by the elements above ground, under cover in a weather tight enclosure, with ventilation adequate to prevent condensation. Maintain temperature and humidity within range required by manufacturer's instructions.

PART 2 – PRODUCTS

2.1 PRODUCT SELECTION

A. General Product Requirements: Provide products that comply with the contract documents that are undamaged and, unless otherwise indicated, new at the time of installation.

1. Provide products complete with accessories, trim, finish, safety guards, and other devices and details needed for a complete installation and the intended use and effect.

2. Standard Products: Where available, provide standard products of types that have been produced and used successfully in similar situations on other projects.

B. Product Selection Procedures: The contract documents and governing regulations govern product selection. Procedures governing product selection include the following:

1. Proprietary Specification Requirements: Where specifications name only a single product or manufacturer, provide the product indicated. No substitutions will be permitted.

2. Semi Proprietary Specification Requirements: Where specifications name two (2) or more products or manufacturers, provide one (1) of the products indicated. No substitutions will be permitted.

a. Where specifications specify products or manufactures by name, accompanied by the term "or equal" or "or approved equal." Comply with the contract document provisions concerning *Substitutions* to obtain approval for use of an unnamed product.

3. Non-Proprietary Specifications: When specifications list products or manufacturers that are available and may be incorporated in the work, but do not restrict the Contractor to use of these products only, the Contractor may propose any available product that complies with contract requirements. Comply with contract document provisions concerning *Substitutions* to obtain approval for use of an unnamed product.

4. Descriptive Specification Requirements: Where specifications describe a product or assembly, listing exact characteristics required, with or without use of a brand or trade name, provide a product or assembly that provides the characteristics and otherwise complies with contract requirements.

5. Performance Specification Requirements: Where specifications require compliance with performance requirements, provide products that comply with these requirements and are recommended by the manufacturer for the application indicated.

a. Manufacturer's recommendations may be contained in published product literature or by the Manufacturer's Certification of Performance.

6. Compliance with Standards, Codes, and Regulations: Where specifications only require compliance with an imposed code, standard or regulation, select a product that complies with the standards, codes or regulations specified.

7. Visual Matching: Where specifications require matching an established sample, the Architect's decision will be final on whether a proposed product matches satisfactorily.

   a. Where no product available within the specified category matches satisfactorily and complies with other specified requirements, comply with provisions of the contract documents concerning *Substitutions* for selection of a matching product in another product category.

8. Visual Selection: Where specified product requirements include the phrase "…as selected from Manufacturer's standard colors, patterns, textures…" or a similar phrase, select a product and Manufacturer that comply with other specified requirements. The Architect will select the color, pattern, and texture from the product line selected.

9. Allowances: Refer to individual specification sections and *Allowance* provisions in Division 1 for allowances that control product selection and for procedures required for processing such selections.

PART 3 – EXECUTION

3.1 INSTALLATION OF PRODUCTS

A. Comply with Manufacturer's instructions and recommendations for installation of products in the applications indicated. Anchor each product securely in place, accurately located and aligned with other work.

   1. Clean exposed surfaces and protect as necessary to ensure freedom from damage and deterioration at time of Substantial Completion.

END OF SECTION 01600

SECTION 01631 - SUBSTITUTIONS

PART 1 - GENERAL

1.1 RELATED DOCUMENTS

A. Drawings and general provisions of the Contract, including all bid documents and addendums associated with this project shall apply to this section.

1.2 SUMMARY

A. This Section includes administrative and procedural requirements for handling requests for substitutions made after award of the Contract.

B. Related Sections: The following sections contain requirements that relate to this Section:

1. Division 1 SECTION 01420 - REFERENCES specifies the applicability of industry standards to products specified.

2. Division 1 SECTION 01300 - SUBMITTALS specifies requirements for submitting the Contractor's Construction Schedule and the Submittal Schedule.

1.3 DEFINITIONS

A. Definitions in this article do not change or modify the meaning of other terms used in the contract documents.

B. Substitutions: Changes in products, materials, equipment, and methods of construction required by the contract documents proposed by the Contractor after award of the Contract are considered to be requests for substitutions. The following are not considered to be requests for substitutions:

1. Substitutions requested during the bidding period, and accepted by addendum prior to award of the Contract, are included in the contract documents and are not subject to requirements specified in this section for substitutions.

2. Revisions to the Contract Documents requested by the Owner or Architect.

3. Specified options of products and construction methods included in the contract documents.

4. The Contractor's determination of and compliance with governing regulations and orders issued by governing authorities.

1.4 SUBMITTALS

A. Substitution Request Submittal: The Architect will consider requests for substitution if received within sixty (60) days after commencement of the work. Requests received more than sixty (60) days after commencement of the work may be considered or rejected at the discretion of the Architect.

1. Submit three (3) copies of each request for substitution for consideration. Submit requests in the form and according to procedures required for change-order proposals and include the Product Evaluation Questionnaire (CP-F116) found within these bid documents.

2. Identify the product or the fabrication or installation method to be replaced in each request. Include related specification section and drawing numbers.

3. Provide complete documentation showing compliance with the requirements for substitutions, and the following information, as appropriate:

a. Coordination information, including a list of changes or modifications needed to other parts of the work and to construction performed by the Owner and separate contractors, that will be necessary to accommodate the proposed substitution.

b. A detailed comparison of significant qualities of the proposed substitution with those of the work specified. Significant qualities may include elements, such as performance, weight, size, durability, and visual effect.

c. Product Data, including drawings and descriptions of products and fabrication and installation procedures.

d. Samples, where applicable or requested.

e. A statement indicating the substitution's effect on the Contractor's Construction Schedule compared to the schedule without approval of the substitution. Indicate the effect of the proposed substitution on overall Contract Time.

f. Cost information, including a proposal of the net change, if any in the Contract Sum.

g. The Contractor's certification that the proposed substitution conforms to requirements in the Contract Documents in every respect and is appropriate for the applications indicated.

h. The Contractor's waiver of rights to additional payment or time that may subsequently become necessary because of the failure of the substitution to perform adequately.

4. Architect's Action: If necessary, the Architect will request additional information or documentation for evaluation within one (1) week of receipt of a request for substitution. The Architect will notify the Contractor of acceptance or rejection of the substitution within three (3) weeks of receipt of the request, or two (2) weeks of receipt of additional information or documentation, whichever is later. Acceptance will be in the form of a change order.

    a. Use the product specified if the Architect cannot make a decision on the use of a proposed substitute within the time allocated.

PART 2 - PRODUCTS

2.1 SUBSTITUTIONS

A. Conditions: The Architect will receive and consider the Contractor's request for substitution when one or more of the following conditions are satisfied, as determined by the Architect. If the following conditions are not satisfied, the Architect will return the requests without action except to record noncompliance with these requirements.

1. Extensive revisions to the contract documents are not required.

2. Proposed changes are in keeping with the general intent of the contract documents.

3. The request is timely, fully documented, and properly submitted.

4. The specified product or method of construction cannot be provided within the Contract Time. The Architect will not consider the request if the product or method cannot be provided as a result of failure to pursue the work promptly or coordinate activities properly.

5. The request is directly related to an “or-equal” clause or similar language in the contract documents.

6. The requested substitution offers the Owner a substantial advantage, in cost, time, energy conservation, or other considerations, after deducting additional responsibilities the Owner must assume. The Owner's additional responsibilities may include compensation to the Architect for redesign and evaluation services, increased cost of other construction by the Owner, and similar considerations.

7. The specified product or method of construction cannot receive necessary approval by a governing authority, and the requested substitution can be approved.

8. The specified product or method of construction cannot be provided in a manner that is compatible with other materials and where the Contractor certifies that the substitution will overcome the incompatibility.

9. The specified product or method of construction cannot be coordinated with other materials and where the Contractor certifies that the proposed substitution can be coordinated.

10. The specified product or method of construction cannot provide a warranty required by the contract documents and where the Contractor certifies that the proposed substitution provides the required warranty.

B. The Contractor's submittal and the Architect's acceptance of shop drawings, product data, or samples for construction activities not complying with the contract documents do not constitute an acceptable or valid request for substitution, nor do they constitute approval.

PART 3 - EXECUTION (Not Applicable)

END OF SECTION 01631

PRODUCT EVALUATION QUESTIONNAIRE

When proposing to substitute products for those specified or proposing a product to meet a specified performance standard, please furnish the following information to assist the Owner and Architect in evaluating the proposed product.

Bid/Quote #: _____

Project: _____

Specification Section: _____

Division:_____

Article #: _____

Name of Product: _____

Manufacturer's Name and Address: _____

_____

1. Attach manufacturer's complete technical data and all information relating to limitations of the product information requiring further testing be deemed necessary by the Architect, the cost of the prescribed test shall be borne by the Contractor. Contractor shall send product samples upon request.

2. Attach a list of projects where comparable use has been made of this product. List the name and location of the project, name of Owner or Architect, Engineer, General Contractor, and Subcontractor (if applicable), and the year installed.

3. List any problems encountered with this product on projects where it has been used. What corrective measures were required?

4. Provide a detailed comparison of the proposed substitute product with that of the specified product. Differences are to be highlighted and called out.

5. Submit a detailed specification, conforming to the format of the technical specifications herein contained, tailored to this project for installation of this product.

6. Will the services of an expert field representative be furnished to supervise the installation of this product?

7. Describe maintenance requirements for this product and availability of expert repair service, if needed.

8. Will the proposed substitution result in a change in Contract price or time of completion? If so, submit itemization of price change and explain effect on time of completion.

9. Will the use of the proposed product necessitate a change in the contract drawings or specifications?

10. Will the use of this product necessitate the payment of any license fees or royalties?

11. Furnish information establishing financial responsibility of the manufacturer. (Number of years in business, volume of business, Dunn & Bradstreet rating, etc.)

12. The Contractor certifies that he or she understands the conditions of use to which this product will be put, and he/she warrants this product as stipulated in the General Conditions.

_____

Name of Contractor

_____

Signature of Officer, Owner or Partner

_____

Date

SECTION 01700 - CONTRACT CLOSEOUT

PART 1 - GENERAL

1.1 RELATED DOCUMENTS

A. Drawings and general provisions of the Contract, including all bid documents and addendums associated with this project shall apply to this section.

1.2 SUMMARY

A. This section includes administrative and procedural requirements for Contract closeout including, but not limited to, the following:

1. Inspection Procedures

2. Submittal of Project Record Document

3. Submittal of Operation and Maintenance Manual

4. Submittal of Warranties

5. Final Cleaning

6. Submittal of Regulated Systems [ACBM (Asbestos Containing Building Materials) & Lead] Closeout Documents

7. Submittal of any Final Prevailing Wage Reports

B. Closeout requirements for specific construction activities are included in the appropriate sections in Divisions 2 through 16.

1.3 SUBSTANTIAL COMPLETION

A. Preliminary Procedures: Before requesting inspection for certification of Substantial Completion, complete the following. List exceptions in the request.

1. In the Application for Payment that coincides with, or first follows, the date Substantial Completion is claimed, show one hundred percent (100%) completion for the portion of the work claimed as substantially complete.

a. Include supporting documentation for completion as indicated in these Contract Documents and a statement showing an accounting of changes to the contract sum.

b. If one hundred percent (100%) completion cannot be shown, include a list of incomplete items, the value of incomplete construction, and reasons the work is not complete.

2. Advise the Owner of pending insurance changeover requirements.

3. Submit specific warranties, workmanship bonds, maintenance agreements, final certifications, and similar documents.

4. Obtain and submit releases enabling the Owner unrestricted use of the work and access to services and utilities.

5. Include occupancy permits, operating certificates, and similar releases.

6. Submit record drawings, maintenance manuals, final project photographs, damage or settlement surveys, property surveys, and similar final record information.

7. Submit all required training meeting minutes.

8. Deliver tools, spare parts, extra stock, and similar items.

9. Make final changeover of permanent locks and transmit keys to the Owner. Advise the Owner's personnel of changeover in security provisions.

10. Complete startup testing of systems and instruction of the Owner's Operation and Maintenance personnel.

11. Discontinue and remove temporary facilities from the site, along with mockups, construction tools, and similar elements.

12. Complete final clean-up requirements, including touch up painting.

13. Touch-up and otherwise repair and restore marred, exposed finishes.

B. Inspection Procedures: On receipt of a request for inspection, the Architect will either proceed with inspection or advise the Contractor of unfilled requirements. The Architect will prepare the Certificate of Substantial Completion following inspection or advise the Contractor of construction that must be completed or corrected before the certificate will be issued.

1. The Architect will repeat inspection when requested and assured that the work is substantially complete.

2. Results of the completed inspection will form the basis of requirements for final acceptance.

3. The cost for any Architectural services for reinspection is the Contractor's sole responsibility.

1.4 FINAL ACCEPTANCE

A. Preliminary Procedures: Before requesting final inspection for certification of final acceptance and final payment, complete the following. List exceptions in the request.

1. Submit the final payment request with releases and supporting documentation not previously submitted and accepted. Include insurance certificates for products and completed operations where required.

2. Submit an updated final statement, accounting for final additional changes to the Contract Sum.

3. Submit a certified copy of the CITY's, Architect's & Engineer's final inspection lists of items to be completed or corrected, endorsed and dated by the Architect. The certified copy of the list shall state that each item has been completed or otherwise resolved for acceptance and shall be endorsed and dated by the Architect.

4. Submit consent of surety to final payment.

5. Submit a final liquidated damages settlement statement.

6. Submit evidence of final, continuing insurance coverage complying with insurance requirements.

7. Submit final meter readings for utilities, a measured record of stored fuel, and similar data as of the date of Substantial Completion or when the Owner took possession of and assumed responsibility for corresponding elements of the work.

B. Reinspection Procedure: The Architect will reinspect the work upon receipt of notice that the work, including inspection list items from earlier inspections, has been completed, except for items whose completion is delayed under circumstances acceptable to the Architect.

1. Upon completion of reinspection, the Architect will prepare a Certificate of Final Acceptance. If the work is incomplete, the Architect will advise the Contractor of work that is incomplete or of obligations that have not been fulfilled but are required for final acceptance.

2. If necessary, reinspection will be repeated.

1.5 RECORD DOCUMENT SUBMITTALS

A. General: Do not use record documents for construction purposes. Protect record documents from deterioration and loss in a secure, fire-resistant location. Provide access to record documents for the Architect's reference during normal working hours. Record documents, including O&M Manuals, as-built drawings and Owner Training procedures can be provided in electronic format, although there shall be 1 hard copy included, per Section G below.

B. Record Drawings: Maintain a clean, undamaged set black line white prints of Contract Drawings and Shop Drawings. Mark the set to show the actual installation where the installation varies from the work as originally shown. Mark which drawing is most capable of showing conditions fully and accurately. Where Shop Drawings are used, record a cross reference at the corresponding location on the Contract Drawings. Give particular attention to concealed elements that would be difficult to measure and record at a later date. At the conclusion of the project, this record set of prints shall be submitted to the Architect for his/her review and comment. If the record set of prints is found to be complete and accurate, the prints shall be returned to the Contractor for submittal to the Owner with other closeout documents.

   Record drawings must be reviewed and approved prior to each pay request by the Owner's representative. The drawings should reflect the work that has been accomplished during the time period of the pay request. Lack of record drawings approval at the time of submittal of a pay request will result in a potential delay in the processing of the pay request.

   1. Mark record sets with red erasable pencil. Use other colors to distinguish between variations in separate categories of the work.

   2. Mark new information that is important to the Owner but was not shown on Contract Drawings or Shop Drawings.

   3. Note related change order numbers where applicable.

   4. Organize record drawing sheets into manageable sets. Bind sets with durable paper cover sheets; print suitable titles, dates and other identification on the cover of each set.

   5. Provide record drawings using electronic media, Auto Cad compatible. Original media will be provided for Contractor to make required record drawing notations.

C. Record Specifications: Maintain one complete copy of the Project Manual, including addenda. Include with the Project Manual, one copy of other written construction documents, such as Change Orders and modifications issued in printed form during construction.

   Record specifications must be reviewed and approved prior to each pay request by the Owner's representative. The specifications should reflect the work that has been accomplished during the time period of the pay request.

Lack of record specification approval at the time of submittal of a pay request will result in a potential delay in the processing of the pay request.

1. Mark these documents to show substantial variations in actual work performed in comparison with the text of the specifications and modifications.

2. Give particular attention to substitutions and selection of options and information on concealed construction that cannot otherwise be readily discerned later by direct observation.

3. Note related record drawing information and product data.

4. Upon completion of the work, submit an electronic record specification to the Architect for the Owner's records.

D. Record Product Data: Maintain one (1) copy of each Product Data submittal. Note related Change Orders and markup of record drawings and specifications.

1. Mark these documents to show significant variations in actual work performed in comparison with information submitted. Include variations in products delivered to the site and from the manufacturer's installation instructions and recommendations.

2. Give particular attention to concealed products and portions of the work that cannot otherwise be readily discerned later by direct observation.

3. Upon completion of markup, submit complete set of record Product Data to the Architect for the Owner's records.

E. Record Sample Submitted: Immediately prior to Substantial Completion, the Contractor shall meet with the Architect and the Owner's personnel at the project site to determine which samples are to be transmitted to the Owner for record purposes. Comply with the Owner's instructions regarding delivery to the Owner's sample storage area.

F. Miscellaneous Record Submittals: Refer to other specification sections for requirements of miscellaneous record keeping and submittals in connection with actual performance of the work. Immediately prior to the date or dates of Substantial Completion, complete miscellaneous records, and place in good order. Identify miscellaneous records properly and bind or electronic file, ready for continued use and reference. Submit to the Architect for the Owner's records.

G. Maintenance Manuals: Organize operation and maintenance data into suitable sets of manageable size. Bind 2 copies (1 hard copy / 1 electronic) properly indexed data in individual, heavy duty, 2-inch, 3-ring, vinyl covered binders, with pocket folders for folded sheet information. Mark appropriate

identification on front and spine of each binder. Include the following types of information:

1. Emergency instructions
2. Spare parts list
3. Copies of warranties
4. Wiring diagrams
5. Recommended turn around cycles
6. Inspection procedures
7. Shop Drawings and Product Data
8. Fixture lamping schedule
9. Any other applicable information

PART 2 - PRODUCTS (Not Applicable)

PART 3 - EXECUTION

3.1 CLOSEOUT PROCEDURES

A. Operation and Maintenance Instructions: Arrange for each installer of equipment that requires regular maintenance to meet with the Owner's personnel to provide instruction in proper operation and maintenance. Provide instruction by manufacturer's representatives if installers are not experienced in operation and maintenance procedures. Include a detailed review of the following items:

1. Maintenance manuals
2. Record documents
3. Spare parts and materials
4. Tools
5. Lubricants
6. Fuels
7. Identification systems
8. Control sequences
9. Hazards

10. Cleaning

11. Warranties and bonds

12. Maintenance agreements and similar continuing commitments

B. As part of instruction for operating equipment, demonstrate the following procedures:

1. Start-up

2. Shut down

3. Emergency operations

4. Noise and vibration adjustments

5. Safety procedures

6. Economy and efficiency adjustments

7. Effective energy utilization

END OF SECTION 01700

SECTION 01710 - FINAL CLEANING

PART 1 - GENERAL

1.1 RELATED DOCUMENTS

A. Drawings and general provisions of the Contract, including all contract documents and addendums associated with this project shall apply to this section.

1.2 SUMMARY

A. This section includes administrative and procedural requirements for final cleaning at Substantial Completion.

B. Related Sections: The following sections contain requirements that relate to this Section:

1. Division 1 SECTION 01500 – CONSTRUCTION FACILITIES AND TEMPORARY CONTROLS specifies general cleanup and waste removal requirements.

2. Division 1 SECTION 1700 – CONTRACT CLOSEOUT specifies general contract closeout requirements.

3. Special cleaning requirements for specific construction elements are included in appropriate sections of Divisions 2 through 16.

C. Multiple Prime Contracts: Each Prime Contractor is responsible for final cleaning their own work. The Contractor for General Construction is responsible for coordinating final cleaning of an area or piece of equipment where more than one (1) Prime Contractor is involved.

D. Environmental Requirements: Conduct cleaning and waste disposal operations in compliance with local laws and ordinances. Comply fully with federal and local environmental and antipollution regulations.

1. Do not dispose of volatile wastes, such as mineral spirits, oil, or paint thinner, in storm or sanitary drains.

2. Burning or burying of debris, rubbish, or other waste material on the premises is not permitted.

PART 2 - PRODUCTS

2.1 MATERIALS

A. Cleaning Agents: Use cleaning materials and agents recommended by the manufacturer or fabricator of the surface to be cleaned. Do not use cleaning agents that are potentially hazardous to health or property or that might damage finished surfaces.

PART 3 - EXECUTION

3.1 FINAL CLEANING

A. General: Provide final-cleaning operations to all workspaces and any adjacent spaces affected by the work performed. Employ experienced workers or professional cleaners for final cleaning. Clean each surface or unit of Work to the condition expected from a commercial building cleaning and maintenance program. Comply with manufacturer's instructions.

B. Complete the following cleaning operations before requesting inspection for certification of Substantial Completion for the entire Project or a portion of the Project.

1. Clean the Project Site, yard and grounds, in areas disturbed by construction activities, including landscape development areas, of rubbish, waste material, litter, and foreign substances.

2. Sweep paved areas broom clean. Rake grounds that are neither planted nor paved to a smooth, even-textured surface.

3. Remove petrochemical spills, stains, and other foreign deposits.

4. Remove tools, construction equipment, machinery, and surplus material from the site.

5. Remove snow and ice to provide safe access to the building.

6. Clean exposed exterior and interior hard surfaced finishes to a dirt-free condition, free of stains, films, and similar foreign substances. Avoid disturbing natural weathering of exterior surfaces. Restore reflective surfaces to their original condition. Wax any required flooring to the City standard.

7. Remove debris and surface dust from limited access spaces, including roofs, plenums, shafts, trenches, equipment vaults, manholes, attics, and similar spaces.

8. Broom clean concrete floors in unoccupied spaces.

9. Vacuum clean carpet and similar soft surfaces, removing debris and excess nap. Shampoo, if required.

10. Clean transparent materials, including mirrors and glass in doors and windows. Remove glazing compounds and other substances that are noticeable vision-obscuring materials. Replace chipped or broken glass and other damaged transparent materials. Polish mirrors and glass, taking care not to scratch surfaces.

11. Remove labels that are not permanent labels.

12. Touch up and otherwise repair and restore marred, exposed finishes and surfaces. Replace finishes and surfaces that cannot be satisfactorily repaired or restored or that already show evidence of repair or restoration.

    a. Do not paint over "UL" and similar labels, including mechanical and electrical nameplates.

13. Wipe surfaces of mechanical and electrical equipment, elevator equipment, and similar equipment. Remove excess lubrication, paint and mortar droppings, and other foreign substances.

14. Clean plumbing fixtures to a sanitary condition, free of stains, including stains resulting from water exposure.

15. Replace disposable air filters and clean permanent air filters. Clean exposed surfaces of diffusers, registers, and grills.

16. Clean ducts, blowers, and coils if units were operated without filters during construction.

17. Clean food-service equipment to a sanitary condition, ready and acceptable for its intended use.

18. Clean light fixtures, lamps, globes, and reflectors to function with full efficiency. Replace burned-out bulbs and defective and noisy starters in fluorescent and mercury vapor fixtures.

19. Leave the Project clean and ready for occupancy.

C. Pest Control: Engage an experienced, licensed exterminator to make a final inspection and rid the Project of rodents, insects, and other pests. Comply with regulations of local authorities. This section is only applicable for a new facility or an addition to an existing facility.

D. Removal of Protection: Remove temporary protection and facilities installed during construction to protect previously completed installations during the remainder of the construction period.

E. Compliances: Comply with regulations of Authorities Having Jurisdiction and safety standards for cleaning. Do not burn waste materials. Do not bury debris or excess materials on the Owner's property. Do not discharge volatile,

harmful, or dangerous materials into drainage systems. Remove waste materials from the site and dispose of lawfully.

1. Where extra materials of value remain after completion of associated Work, they become the Owner's property. Dispose of these materials as directed by the Owner.

END OF SECTION 01710

SECTION 01 9113 – GENERAL COMMISSIONING REQUIREMENTS

PART 1 – GENERAL

1.1 RELATED WORK

A. All other sections in Division 21, 22, and 23.

B. Specification Section 220800 – "General Commissioning Requirements"

C. Specification Section 260800 – "Electrical Systems Commissioning

D. Specification Section 230800 – "Mechanical Systems Commissioning"

1.2 RELATED DOCUMENTS

A. Owners Project Requirements (OPR)

B. Basis of Design (BOD)

1.3 COMMISSIONING AGENT OF RECORD

A. Company: The Commissioning Agent contracted directly with City of Fernley will be_____. The contractors or any of their sub-contractors are not responsible to hire the commissioning agent for this project.

B. Project Manager: _____ shall be the Project Manager throughout the entire commissioning process.

1.4 DESCRIPTION

A. The purpose of the commissioning process is to provide the Owner/operator of the facility with a high level of assurance that the mechanical, Plumbing and associated electrical Systems have been installed in the prescribed manner, and operate within the performance guidelines set in the design intent. The Commissioning Authority shall provide the Owner with an unbiased, objective view of the systems installation, operation, and performance. This process is not to take away or reduce the responsibility of the design professionals or installing contractors to provide a finished product. Commissioning is intended to enhance the quality of system start-up and aid in the orderly transfer of systems to beneficial use by the owner. The Commissioning Authority will be a member of the construction team, cooperating and coordinating all commissioning activities with the design professionals, construction manager, contractors, subcontractors, manufacturers and equipment suppliers.

1.5 SCOPE

A. The General systems commissioning shall include a demonstration by the Contractor with the assistance of the Commissioning Authority (CxA) of each piece of equipment to comply with the Construction Documents (CD). The commissioning process shall demonstrate that each piece of equipment is performing and operating to the CDs.

B. Participants in General Systems Commissioning: Commissioning systems shall be conducted with representatives from the following entities as needed.

1. General Contractor

2. Mechanical Contractor

3. BMS or ATC Contractor

4. Factory Authorized Service Personnel for all major pieces of equipment. This is not a sales representative, but an authorized technician certified to work on the piece of equipment.

5. Water Treatment Contractor

6. Electrical Contractor

7. Test and Balance Contractor

8. Owner's Representative

9. Electrical Engineer

10. Mechanical Engineer

11. Architectural Team

C. Kickoff, Coordination and MEP Meetings

1. The CxA will attend the contractors sub meeting. Contractor shall schedule time at meetings for review of Issues log, upcoming installations, schedule, submittals, and commissioning plan review.

2. Other meetings such as the Commissioning Kick-Off Meeting, Update Meetings, and other Coordination Meetings shall be attended by those participants as indicated in the "Participants in General Systems Commissioning"

D. Submittal Reviews and Meetings

1. The CxA shall review each submittal in Division 22, 23, 26, and provide comment and review to the design team prior to return of submittal to contractor.

2. Submittal reviews are NOT an approval but a courtesy review to help validate products submitted is in general compliance with the construction documents.

E. Issues Log

1. An issues log shall be kept by the CxA. These issues will identify issues, defects, improper installations, and deficiencies of the installation and design. The issues log will have the issue, a potential resolution, the sub-contractor responsible, the date of the issue found and the CxA who found the issue.

2. The issues log shall be addressed weekly by the contractor; any unresolved items shall be included in the contractor punch list for completion.

3. When an item is completed and addressed by the contractor or sub- contractor responsible, the party responsible shall sign off and deliver to the CxA for review. The sign off shall include how the contractor addressed the issue and the date in which the contractor addressed the issue

F. Construction Checklist, Pre and Final Functional Testing Checklist, and Startup Checklist

1. The CxA shall develop construction checklist that will be executed by the CxA. The contractors and sub-contractors shall review the checklist for compliance with the ability of their individual systems. If the contractor or sub-contractors do not provide comments to the CxA then the CxA shall assume their procedures shall not harm nor deteriorate the individual systems. If a problem occurs during testing that causes a piece of equipment of system to malfunction, damage, or any other failure and the contractor or sub-contractor has not in writing opposed such test then the contractor or sub-contractor shall be liable for any damages and delays.

2. The contractor shall fill out checklist called Contractor Readiness checklist. These shall be delivered in the commissioning plan and shall be used to show the CxA that the contractor is ready for Final Function Testing.

3. Startup Sheets shall be delivered to the CxA. The contractor responsible for the piece of equipment is also responsible for delivering those startup sheets to the CxA.

4. Functional Testing shall be attended by the members as defined in "Participants in General Systems Commissioning."

5. Should any of the aforementioned requirements not be met on the date that the commissioning process commences and or if deficiencies are observed during the commissioning process the commissioning will be considered a failure and the deficiencies will be required to be remedied and then addressed in writing prior to requesting a date for re-commissioning. There will be no additional costs allowed to the Contractor for re-commissioning sessions as may be required to address issues that are found to be in non- compliance with the requirements of this specification.

G. Current Facility Requirements Document

1. The CxA shall prepare a document that contains the following pieces of information. This document shall include the following:

   a. a sequence of operations for the building
   b. the building occupancy schedule
   c. equipment run-time schedules
   d. set points for all General equipment
   e. set lighting levels throughout the building
   f. minimum outside air requirements
   g. any changes in schedules or set points for different seasons, days of the week, and times of day
   h. a systems narrative describing the mechanical systems and equipment
   i. a preventative maintenance plan for building equipment described in the systems narrative

2. The document shall be delivered to the Owner by the CxA in a Microsoft Word (.doc or .docx) format (Document for CITY at end of project that UNVC will deliver.)

H. Systems Manual

1. The CxA shall prepare a document that contains the following pieces of information. This document shall include the following:

   a. As-built sequence of operation
   b. Original set points for all systems commissioned

c. Recommended schedule for sensor recalibration
d. Equipment operations and maintenance manuals
e. Equipment preventive maintenance schedules
f. Confirmation of completed training for the owner and occupants (Document for CITY at end of project that UNVC will deliver.)

1.6 SYSTEMS TO BE COMMISSIONED

A. This list is not intended to be exhaustive. All division 22, 23, and 26 and any equipment, piping, balancing, controls, etc. that are defined in the entire cumulative sections of division 22, 23, and 26 will go through commissioning. The below list is a representative sample of items that are typically commissioned.

A. All electrical systems including power (emergency and normal), lighting controls, fire alarm, security, and audio/visual.

B. All building HVAC systems and controls

C. All building plumbing systems

1.7 COORDINATION

A. The Commissioning authority shall receive a copy of all construction documents, addenda, change orders, and appropriate approved submittals and shop drawings directly from the Contractor. We only use this documentation for our review, but not as a method of approval.

B. The Commissioning Authority shall disseminate written information and documents to all responsible parties relative to the nature and extent of the communication.

C. The Commissioning Authority is primarily responsible to the Owner, and as such, shall regularly appraise the Architect, the Contractor, and the Owner of progress, pending problems and/or disputes, and shall provide regular status reports on progress with each system. Any potential change in the contractual and/or financial obligations of the owner (credits, change orders, schedule changes, etc.) shall be identified and quantified as soon as possible.

D. The Commissioning Authority shall coordinate the schedule of commissioning activities with the construction schedule. It is possible that some procedures will be completed before the entire Mechanical system is completed.

1.8 SCHEDULE

A. Final Commissioning shall not commence on the individual pieces of equipment, Test and Balance, Controls, and other mechanical systems until the Contractor Readiness Forms are delivered to the CxA.

B. Pre-Functional Commissioning shall commence during the progress of the project. Contractor Readiness checklist do not typically have to be filled out for the CxA to check out these systems. However, the contractor is responsible to inform and schedule the CxA to do Pre-Functional Checks.

C. Contractor schedules and scheduling is the responsibility of the Contractor. The Commissioning Authority shall provide commissioning scheduling information to the contractor for review and planning activities.

D. Individual dates are defined in the individual commissioning specifications for each spec section as defined in the other commissioning specifications.

1.9 MISCELLANEOUS CONTRACTOR RESPONSIBILITIES

A. Means and Methods: The contractor is solely responsible for the means and methods of construction. While the CxA shall assist in construction the final responsibility rest solely on the General and Installation Contractor.

PART 2 – PRODUCTS (Not Applicable)

PART 3 – EXECUTION

3.1 COMMISSIONING KICKOFF MEETING

A. The CxA shall facilitate a Commissioning Kickoff Meeting after all Mechanical, Electrical, and General subcontractors are under contract with the General Contractor. The CxA shall invite the Architect, Engineers, and Owners Representatives to the meeting.

B. The General Contractor shall ensure that the following individuals are in attendance:

1. The Mechanical Foreman and Project Manager

2. The General Foreman and Project Manager

3. The Controls Foreman and Project Manager

4. The Test and Balance Project Manager

5. The Electrical Foreman and Project Manager

6. The Fire Protection Foreman and Project Manager

7. The General Contractor Project Engineer, Superintendent, and Project Manager

C. The CxA shall keep meeting minutes and distribute to the individuals present.

3.2 DISTRIBUTION LIST

A. The distribution list shall be developed during the Commissioning Kickoff Meeting. This distribution list shall be used for all distribution of commissioning activities. While every effort shall be made to distribute all pertinent information to the subcontractors by the CxA, the sole responsibility for sub-contractors to receive information rest on the General Contractor.

3.3 COMMISSIONING PLAN

A. The Commissioning Plan shall be developed by the CxA and delivered at the conclusion of the submittal process.

B. The Commissioning Plan will have the CxA Procedural Standards for testing, the PFAT checklist, the FAT checklist and the Contractor Readiness checklist.

C. The sub-contractors and contractors are responsible for reviewing the above checklist and provide comments to the CxA within 30 calendar days of receiving the commissioning plan. During this comment period, the comments must be received in writing and the CxA will work with the individual contractors and sub-contractors to ensure the safety of systems. After the thirty (30) day period for comment any additional comments received shall be reviewed by the CxA, however; the subcontractor shall be liable for any cost associated with this review and any delays.

3.4 SUBMITTAL REVIEWS AND SUBMITTAL MEETINGS

A. The CxA shall review all mechanical submittals. It is the responsibility of the Architect to ensure the contractor receives the CxA reviews. The Architect is responsible for delivering the submittals to the CxA, and to receive and incorporate comments prior to submittal return to contractor.

B. The subcontractor, supplier and manufacturer are responsible to submit with initial submittals a line-by-line submittal compliance document. The compliance document will follow the specification that the submittal is in reference too. The compliance document will have one of the following for each paragraph of the specification: Comply, Exception, or Unable to Comply. With each Exception and Unable to comply, the compliance document will have a detailed explanation.

3.5 BUILDING INFORMATION MODELING (BIM) REVIEWS

A. The CxA shall review the BIM models at 90% completion for access issues. The file shall be delivered to the CxA in a NavisWorks format (.nwd).

B. The contractor may split the review up by floors or buildings. Partial models shall not be reviewed by the CxA until the entire floor is completed to 90%.

C. The CxA shall deliver a floor plan with markups on areas of access concern.

D. BIM Model shall include the following:

1. All duct work and air handling equipment. Ductwork shall show flanges. Model shall show insulation around duct work.

2. All mechanical equipment.

3. All hangers including unistrut, clevis, all-thread and strap material.

4. Duct fittings including HETO and flex and diffusers/grilles.

5. Electrical work and controls conduit cumulating 1.5" or larger.

6. Mechanical access zones

7. Fire/Smoke or fire dampers including access zones.

8. Mechanical piping larger than ¾".

9. Refrigerant lines, no matter the size.

10. Cable tray

11. Electrical Equipment

12. All hangers and supports for electrical equipment.

13. All light fixtures

14. All power feeds including conduit or bus bars.

15. Outlets and switches where location is a priority for architectural.

16. Electrical equipment access zones.

17. All occupancy sensors, daylight sensors, exit signs, fire alarm strobes and horns, cameras, speakers, and AV equipment located in ceiling grid.

18. Natural gas lines larger than ½”

19. Plumbing lines larger than ½”

20. Insulation shall be shown with the correct sizing on plumbing lines.

21. All plumbing valves and cleanouts.

22. Access zones to plumbing valves and cleanouts.

23. Fire protection piping no matter the size.

24. Fire protection drops

25. Fire protection equipment

26. The entire steel structure including beams, columns, supports, braces, bent plate, supports or secondary supports.

27. All catwalks and their support systems.

28. All concrete structures include walls, columns or beams.

29. All access doors in the architectural ceiling for access to all electrical, plumbing and mechanical systems.

30. Ceiling grid

31. All walls windows and doors.

32. Lab hoods

33. Soda Machine Lines

34. Kitchen equipment and hoods

3.6 COORDINATION MEETINGS (MEP MEETINGS)

A. The CxA will attend the contractors MEP meeting at a minimum every other week.

B. The purpose of these meetings for UNVC to attend is to assist with coordination of installation, commissioning, and testing activities. These meetings will be conducted by the contractor.

3.7 CONSTRUCTION OBSERVATION AND FIRST INSTALLS

A. The CxA shall observe construction activities throughout the construction of the project. The contractors shall be available during these observations for information as needed. An issues log as outlined in Part 1 shall be kept by the CxA.

B. Mockups or first installations of individual pieces of equipment need to be installed in their location where applicable. First Installs will be required of the contractor and sub-contractor as defined in the individual commissioning specifications.

C. Contractor shall coordinate and not prohibit observations and first installs. Sub-contractors, owner's representatives and engineers shall review the first installs for compliance.

3.8 CONTRACTOR READINESS CHECKLIST

A. Contractor Readiness Checklist (CRC) shall be delivered by the CxA to the contracting team for the contracting team to fill out. The purpose of the CRCs to inform the CxA of the readiness of the contractor to begin Functional Testing on the mechanical system.

B. The CxA shall not begin Functional Testing of the system or any equipment until the CRC are received. While some systems can be tested without a complete system the CxA shall have the final say on which can and cannot begin functional testing based on the completeness of the project. A single CRC can be completed per type of equipment. (i.e., if there are 80 Heat Pumps and all of them are ready then a single sheet can be filled out for all 80 Heat Pumps)

C. If the contractor delivers the CRC and the CxA finds, the system is not functional then the contractor shall be liable for cost incurred by the CxA.

3.9 PRE-FUNCTIONAL CHECKLIST

A. The Pre-Functional Checklist shall be developed by the CxA and delivered in the commissioning plan.

B. The Pre-Functional Checklist shall be reviewed by the contractors and subcontractors and shall be executed by the CxA.

C. The CxA shall review 100% of all General systems installations.

3.10 FUNCTIONAL PERFORMANCE CHECKLIST

A. The CxA shall execute Functional Performance Checks. Suppliers, BMS or ATC Contractor, Mechanical Contractors, Electrical Contractors, Test and Balance Contractor, and General Contractors shall be available at the request of the CxA.

B. Commissioning Authority shall develop and document the commissioning procedures to be used this will be delivered to the contractor in the commissioning plan and is called the Procedural Standards. Include a performance checklist and performance test data sheets for each system based on actual system configuration. These procedures shall be reviewed by the appropriate contractors and sub-contractors for technical depth, clarity of documentation and completeness. Emphasis shall be placed on testing procedures that shall determine actual system performance and compliance with the design intent.

C. The Commissioning Authority shall determine the acceptance procedures for each system within General divisions as required. The acceptance procedures shall incorporate the commissioning standards and successful testing results as referred to throughout General specifications.

D. The appropriate contractor and vendor(s) shall be informed of what tests are to be performed and the expected results. Whereas some test results and interpretations may not become evident until the actual tests are performed, all parties shall have a reasonable understanding of the requirements. The Commissioning Plan shall address those requirements and be distributed to all parties involved with that particular system.

E. Acceptance procedures shall confirm the performance of systems to the extent of the design intent. When a system is accepted, the Owner shall be assured that the system is complete, works as intended, is correctly documented, and operator training has been performed.

F. During the functional performance testing, the BMS or ATC contractor shall be in attendance to setup the CxA on the controls system and be in attendance throughout the Sequence of Operation checks.

G. The CxA shall review 100% and test 100% of all mechanical, electrical and plumbing systems.

3.11 TRENDING

A. Trending points will be outlined in the Procedural Standards as delivered by the CxA in the commissioning plan.

B. Following substantial completion and starting with normal building occupancy and use, a minimum Four (4) weeks of "Clean" trending (no mechanical, software, control loop or Building Management System "BMS" failures) shall be provided on "Any" or "All" BMS systems & points as directed by the CxA. Trends shall be coincident at 15-minute intervals with a cache able to handle four (4) weeks of trending on a rollover basis. The trending shall also be setup to a COV in conjunction with the 15-minute requirement if possible.

C. The CxA will review the trends after the four weeks of clean trending.

3.12 OPERATION AND MAINTENANCE MANUALS

A. The contractor responsible for Mechanical O&Ms shall deliver electronic copies of those O&M to the CxA at 75% billable completion of installed mechanical systems. The O&M manuals shall include installation requirements and maintenance requirements.

B. The final O&M Manual shall be reviewed by the CxA before delivery to the Owner. Any deficiencies shall be noted, and the contractor shall remedy before final delivery.

C. The final O&M must be delivered to the Owner before training shall commence.

3.13 CURRENT FACILITY REQUIREMENTS AND OPERATION AND MAINTENANCE PLAN

A. The contractors shall support the CxA when they are gathering information for the following.

A. Sequences of operation for the building

B. Building occupancy schedule

C. Equipment run-time schedules

D. Set points for all General equipment

E. Lighting levels throughout the building

F. Minimum outside air requirements

G. Changes in schedules or set points for different seasons, days of the week, and times of day

H. Systems narrative describing the mechanical and electrical systems and equipment

I. Preventive maintenance plan for building equipment described in the systems narrative

J. CxA program that includes periodic CxA requirements, ongoing CxA tasks, and continuous tasks for critical facilities (UNVC will make this document, but it requires the contractor to aid in getting us any information as needed)

3.14 SYSTEMS MANUAL

A. The contractors shall provide the following in an editable Microsoft Word Format. (.doc or .docx) in a narrative format for use by the CxA to provide the final Systems Manual. The submittals shall be compiled by section in a .pdf format

1. Construction record documents and specifications

2. Approved submittals

3. As-built drawings

4. As-built sequence of operation

5. Equipment operations and maintenance manuals

6. Equipment preventive maintenance schedules

7. Confirmation of completed training for the owner and occupants

3.15 TRAINING

A. The CxA shall be invited to all General training sessions by the General Contractor.

B. The training shall not commence until the system has been commissioned and proven ready for training.

C. The contractor shall schedule and coordinate training sessions for the Owner's staff for each system. Training may be in a classroom setting with the appropriate schematics, handouts, and visual/audio training aids on-site with equipment.

D. The Commissioning Authority shall review agendas and training schedules, which shall be submitted four weeks before training.

E. The agenda shall include but not limited to operational set points, runtime schedules, general operation and maintenance requirements, time and location for the training.

F. The training program shall include the following:

1. Emergency instructions and procedures

2. Operation instructions and procedures

3. Troubleshooting procedures

4. Maintenance and inspection procedures

5. Repair procedures

6. Upkeep of the systems manual and associated maintenance documentation logs

G. Evaluations shall be done of the training system by the attendees. The evaluations shall reflect ASHRAE 0-2013-Appenix P Evaluation Form.

1. If the Evaluations from the training average rises above 2 (based on 1 being very well trained and 5 not at all trained) then the training shall recommence. All cost for the re-training shall be solely born by the contractor training. Including any reimbursement to the Owner for the Czar,

the Owners Operational Staff, and any other cost born by the owner for failure to comply with requirements.

H. The contractor shall provide a schedule for training times and dates. The schedule shall include location, who is training, trainer's contact information,

I. The appropriate installing contractors shall provide training on all the major systems per specifications, including peculiarities specific to this project.

J. The equipment vendors shall provide training on the specifics of each major equipment item including philosophy, troubleshooting, and repair techniques.

K. The automatic control vendor shall provide training on the control system per their specification section.

L. The contractor shall furnish a final video DVD set, above the owner's requirements as defined elsewhere, to the CxA for their use and ownership and review. Included in those DVDs shall be the sign-in sheet for each training.

3.16 RECORD DRAWINGS OR REDLINES

A. The CxA shall review the "Redlines" or "Record Drawings" on a bi-weekly basis.

B. Record Drawings or Redlines shall be kept in a printed format beyond any BIM modeling. If record drawings are being kept on BIM a printed version on a typical 2D flat sheet of paper large enough to read shall be kept as well in the General Contractors trailer.

C. The following requirements shall be meet for Redlines or Record Drawings:

1. Underground: All underground piping no matter the size shall be shown with dimensions from walls (not gridlines) and elevations of the pipe at every ninety or y fitting and marked at every 20 feet on the drawings.

2. Above Ground Concealed: All above ground piping no matter the size concealed in hard lid or behind walls shall be dimensioned from walls.

3. Above Ground Accessible or Unconcealed: All above ground piping, no matter the size, shall be documented in the redlines. General location shall be sufficient as long as the general location is in the same area not separated by walls.

D. The final redlines shall be reviewed by the CxA before delivery to the Architect.

3.17 WARRANTY PERIOD AND CONTINUOUS COMMISSIONING

A. The CxA shall provide Continuous Commissioning during the One Year Warranty Period after substantial completion. During this time, the CxA shall adjust settings on the BMS for optimization of the system, shall find issues with the system, and shall report issues to the contractors.

B. The contractor and sub-contractors shall resolve issues immediately.

3.18 REPEATED WORK, TESTING, AND REVIEWS

A. Contractor shall, at no additional cost to the Owner, repeat the complete verification test procedure for each test for which acceptable results are not achieved. Repeat tests until acceptable results are achieved.

B. Contractor shall compensate the Owner for costs incurred as the result of tests review or inspection repeated. This includes the costs for the Commissioning Authority, Design Architect, Design Engineers, and Owner--s personnel for billed costs (including travel expenses) for the extraordinary participation of the Owners Representative, Architect, Commissioning Authority or owner's staff.

END OF SECTION 019113

U.S. DEPARTMENT OF THE TREASURY CORONAVIRUS LOCAL FISCAL RECOVERY FUNDAWARD TERMS AND CONDITIONS

1. Use of Funds:

    a. Recipient understands and agrees that the funds disbursed under this award may only be used in compliance with section 603(c) of the Social Security Act (the Act), Treasury's regulations implementing that section, and guidance issued by Treasury regarding the foregoing.

    b. Recipient will determine prior to engaging in any project using this assistance that it has the institutional, managerial, and financial capability to ensure proper planning, management, and completion of such project.

2. Period of Performance: The period of performance for this award begins on the date hereof and ends on _____. As set forth in Treasury's implementing regulations, Recipient may use award funds to cover eligible costs incurred during the period that begins on _____, and ends on _____.

3. Reporting: Recipient agrees to comply with any reporting obligations established by Treasury as they relate to this award.

4. Maintenance of and Access to Records:

    a. Recipient shall maintain records and financial documents sufficient to evidence compliance with section 603(c) of the Act, Treasury's regulations implementing that section, and guidance issued by Treasury regarding the foregoing.

    b. The Treasury Office of Inspector General and the Government Accountability Office, or their authorized representatives, shall have the right of access to records (electronic and otherwise) of Recipient in order to conduct audits or other investigations.

    c. Records shall be maintained by Recipient for a period of five (5) years after all funds have been expended or returned to Treasury, whichever is later.

5. Pre-award Costs: Pre-award costs, as defined in 2 C.F.R. §200.458, may not be paid with funding from this award.

6. Administrative Costs: Recipient may use funds provided under this award to cover both direct and indirect costs.

7. Cost Sharing: Cost sharing or matching funds are not required to be provided by Recipient.

8. Conflicts of Interest: Recipient understands and agrees it must maintain a conflict of interest policy consistent with 2 C.F.R. §200.318(e) and that such conflict of interest policy is applicable to each activity funded under this award. Recipient and subrecipients must disclose in writing to Treasury or the pass-through entity, as appropriate, any potential conflict of interest affecting the awarded funds in accordance with 2 C.F.R. § 200.112.

9. Compliance with Applicable Law and Regulations:

a. Recipient agrees to comply with the requirements of section 603 of the Act, regulations adopted by Treasury pursuant to 603(f) of the Act, and guidance issued by Treasury regarding the foregoing. Recipient also agrees to comply with all other applicable federal statutes, regulations, and executive orders, and Recipient shall provide for such compliance by other parties in any agreements it enters into with other parties relating to this award.

b. Federal regulations applicable to this award including, without limitation, the following:

i. Uniform Administrative Requirements. Cost Principles, and Audit Requirements for Federal Awards, 2 C.F.R. Part 200, other than such provisions as Treasury may determine are inapplicable to this Award and subject to such exceptions as may be otherwise provided by Treasury. Subpart F – Audit Requirements of the Uniform Guidance, implementing the Single Audit Act, shall apply to this award.

ii. Universal Identifier and System for Award Management (SAM) 2 C.F.R. Part 25, pursuant to which the award term set forth in Appendix A to 1 C.F.R. Part 25 is hereby incorporated by reference.

iii. Reporting Subaward and Executive Compensation Information, 2 C.F.R. Part 170, pursuant to which the award term set forth in Appendix A to 2 C.F.R. Part 170 is hereby incorporated by reference.

iv. OMB Guidelines to Agencies on Governmentwide Debarment and Suspension (Nonprocurement), 2 C.F.R. Part 180, including the requirement to include a term or condition in all lower tier covered transactions (contracts and subcontracts described in 2 C.F.R. Part 180, subpart B) that the award is subject to 2 C.F.R. Part 180 and Treasury's implementing regulation at 31 C.F.R. Part 19.

v. Recipient Integrity and Performance Matters, pursuant to which the award term set forth in 2 C.F.R. Part 200, Appendix XII to Part 200 is hereby incorporated by reference.

vi. Governmentwide Requirements for Drug-Free Workplace, 31 C.F.R. Part 21.

vii. New Restrictions on Lobbying, 31 C.F.R. Part 21

viii. Uniform relocation Assistance and Real Property Acquisitions Act of 1970 (42 U.S.C. §§4601-4655) and implementing regulations.

ix. Generally applicable federal environmental laws and regulations.

c. Statutes and regulations prohibiting discrimination applicable to this award include, without limitation, the following:

i. Title VI of the Civil Rights Act of 1964 (42 U.S.C. §§2000D *et seq.*) and Treasury's implementing regulations at 31 C.F.R. Part 22, which prohibit discrimination on the basis of race, color, or national origin under programs or activities receiving federal financial assistance;

ii. The Fair Housing Act, Title VII of the Civil Rights Act of 1963 (42 U.S.C. §§3601 et seq.), which prohibits discrimination in housing on the basis of race, color, religion, national origin, sex, familial status, or disability;

iii. Section 504 of the Rehabilitation Act of 1973, as amended (29 U.S.C. § 794), which prohibits discrimination on the basis of disability under any program or activity receiving federal financial assistance;

iv. The Age Discrimination act of 1975, as amended (42 U.S.C. §§ 6101 et. Seq.), and Treasury's implementing regulations at 31 C.F.R. Part 23, which prohibit discrimination on the basis of age in progress or activities receiving federal financial assistance; and

v. Title II of the Americans with Disabilities Act of 1990, as amended (42 U.S.C. §§12101 et. seq.), which prohibits discrimination on the basis of disability under programs, activities, and services provided or made available by state and local governments or instrumentalities or agencies thereto.

10. Remedial Actions. In the event of Recipient's noncompliance with section 603 of the Act, other applicable laws, Treasury's implementing regulations, guidance, or any reporting or other program requirements, Treasury may impose additional conditions on the receipt of a subsequent tranche of future award funds, if any, or take other available remedies as set forth in 2 C.F.R. § 200.339. In the case of a violation of section 603(c) of the Act regarding the use of funds, previous payments shall be subject to recoupment as provided in section 603(e) of the Act.

11. Hatch Act. Recipient agrees to comply, as applicable, with requirements of the Hatch Act (5 U.S.C. §§ 1501-1508 AND 7324-7328), which limit certain political activities of State or local government employees whose principal employment is in connection with an activity financed in whole or in part by this federal assistance.

12. False Statements. Recipient understands that making false statements or claims in connection with this award is a violation of federal law and may result in criminal, civil, or administrative sanctions, including fines, imprisonment, civil damages and penalties, debarment from participating in federal awards or contracts, and/or any other remedy available by law.

13. Publications. Any publications produced with funds from this award must display the following language: "This project [is being] [was] supported, in whole or in part, by federal award number [enter project FAIN] awarded to [name of Recipient] by the U.S. Department of the Treasury."

14. Debts Owed the Federal Government.
    a. Any funds paid to Recipient (1) in excess of the amount to which Recipient is finally determined to be authorized to retain under the terms of this award; (2) that are determined by the Treasury Office of Inspector General to have been misused; or (3) that are determined by Treasury to be subject to a repayment obligation pursuant to section 603(e) of the Act and have not been repaid by Recipient shall constitute a debt to the federal government.

b. Any debts determined to be owed the federal government must be paid promptly by Recipient. A debt is delinquent if it has not been paid by the date specified in Treasury's initial written demand for payment, unless other satisfactory arrangements have been made or if the Recipient knowingly or improperly retains funds that are a debt as defined in paragraph 14(a). Treasury will take any actions available to it to collect such a debt.

15. Disclaimer.

a. The United States expressly disclaims any and all responsibility or liability to Recipient or third persons for the actions of Recipient or third persons resulting in death, bodily injury, property damages, or any other losses resulting in any way from the performance of this award or any other losses resulting in any way from the performance of this award or any contract, or subcontract under this award.

b. The acceptance of this award by Recipient does not in any way establish an agency relationship between the United States and Recipient.

16. Protections for Whistleblowers.

a. In accordance with 41 U.S.C. §4712, Recipient may not discharge, demote, or otherwise discriminate against an employee in reprisal for disclosing to any of the list of persons or entitles provided below, information that the employee reasonable believes is evidence of gross mismanagement of a federal contract or grant, a gross waste of federal funds, an abuse of authority relating to a federal contract or grant, a substantial and specific danger to public health or safety, or a violation of law, rule, or regulation related to a federal contact (including the competition for or negotiation of a contract) or grant.

b. The list of persons and entities referenced in the paragraph above includes the following:

i. A member of Congress or a representative of a committee of Congress

ii. An Inspector General;

iii. The Government Accountability Office;

iv. A Treasury employee responsible for contact or grant oversight or management;

v. An authorized official of the Department of Justice or other law enforcement agency;

vi. A court of grand jury; or

vii. A management official or other employee of Recipient, contractor, or subcontractor who has the responsibility to investigate, discover, or address misconduct.

c. Recipient shall inform its employees in writing of the rights and remedies provided under this section, in the predominant native language of the workforce.

17. Increasing Seat Belt Use in the United States. Pursuant to Executive Order 13043, 62 FR 19217 (Apr. 18, 1997), Recipient should encourage its contractors to adopt and enforce on the job seat belt policies and programs for their employees when operating company-owned, rented or personally owned vehicles.

18. Reducing Text Messaging While Driving. Pursuant to Executive Order 13513, 74 FR 51225 (Oct. 6, 2009),

Recipient should encourage its employees, subrecipients, and contractors to adopt and enforce policies that ban text messaging while driving, and Recipient should establish workplace safety policies to decrease accidents caused by districted drivers.

SECTION 011000 - SUMMARY

PART 1 GENERAL

1.1 PROJECT

A. Project Name: City of Fernley Community Response and Resource Center

B. Owner's Name: City of Fernley.

C. Architect's Name: TSK Architects.

D. The Project consists of the construction of _____.

1.2 CONTRACT DESCRIPTION

1.3 OWNER OCCUPANCY

A. Owner intends to occupy the Project upon Substantial Completion.

B. Cooperate with Owner to minimize conflict and to facilitate Owner's operations.

C. Schedule the Work to accommodate Owner occupancy.

1.4 CONTRACTOR USE OF SITE AND PREMISES

A. Construction Operations: Limited to areas noted on Drawings.
   1. Locate and conduct construction activities in ways that will limit disturbance to site.

B. Arrange use of site and premises to allow:
   1. Owner occupancy.
   2. Work by Others.
   3. Work by Owner.
   4. Use of site and premises by the public.

C. Provide access to and from site as required by law and by Owner:
   1. Emergency Building Exits During Construction: Keep all exits required by code open during construction period; provide temporary exit signs if exit routes are temporarily altered.
   2. Do not obstruct roadways, sidewalks, or other public ways without permit.

D. Time Restrictions:
   1. Limit conduct of especially noisy exterior work to the hours of _____.

E. Utility Outages and Shutdown:
   1. Prevent accidental disruption of utility services to other facilities.

1.5 WORK SEQUENCE

A. Construct Work in phases during the construction period:
   1. Phase 1: Base Bid.
   2. Phase 2: Alternate A.
   3. Phase 3: Alternate B.

B. Coordinate construction schedule and operations with Owner.

PART 2 PRODUCTS - NOT USED

PART 3 EXECUTION - NOT USED

END OF SECTION

SECTION 012300 - ALTERNATES

PART 1 GENERAL

1.1 SECTION INCLUDES

A. Description of Alternates.

B. Documentation of changes to Contract Price and Contract Time.

1.2 RELATED REQUIREMENTS

1.3 ACCEPTANCE OF ALTERNATES

A. Alternates quoted on Bid Forms will be reviewed and accepted or rejected at Owner's option. Accepted Alternates will be identified in the Owner-Contractor Agreement.

B. Coordinate related work and modify surrounding work to integrate the Work of each Alternate.

1.4 SCHEDULE OF ALTERNATES

A. Alternate A - Refer to Drawings:

B. Alternate B - Refer to Drawings:

C. Alternate No. ____ - _____:

PART 2 PRODUCTS - NOT USED

PART 3 EXECUTION - NOT USED

END OF SECTION

SECTION 012500 - SUBSTITUTION PROCEDURES

PART 1 - GENERAL

1.1 SUMMARY

A. Section includes:
   1. Administrative and procedural requirements for substitutions.

1.2 RELATED REQUIREMENTS

A. Section 006325 - Substitution Request Form - During Construction: Required form for substitution requests made after award of contract (During construction).

B. Section 013000 - Administrative Requirements: Project meetings, photographs, documentation, reports, and drawing coordination.

C. Section 013300 - Submittal Requirements: Submittal procedures.

D. Section 016000 - Product Requirements: Fundamental product requirements, product options, delivery, storage, and handling and requirements for submitting comparable product submittals for products by listed manufacturers.

1.3 DEFINITIONS

A. Substitutions: Changes in products, materials, equipment, and methods of construction from those required by the Contract Documents and proposed by Contractor.
   1. Substitutions for Cause: Changes proposed by Contractor that are required due to changed Project conditions, such as unavailability of product, regulatory changes, or unavailability of required warranty terms.
   2. Substitutions for Convenience: Changes proposed by Contractor or Owner that are not required in order to meet other Project requirements but may offer advantage to Contractor or Owner.

1.4 SUBMITTALS

A. See Section 013300 - Submittal Requirements, for submittal procedures.

B. Substitution Requests: Submit (1) electronic copy of each request for consideration. Identify product or fabrication or installation method to be replaced. Include Specification Section number and title and Drawing numbers and titles.
   1. Substitution Request Form: Use form provided in Project Manual. Refer to Document 006325 - Substitution Request Form.

C. Documentation: Show compliance with requirements for substitutions and the following, as applicable:
   1. Statement indicating why specified product or fabrication or installation cannot be provided, if applicable.
   2. Coordination information, including a list of changes or revisions needed to other parts of the Work and to construction performed by Owner and separate Contractors, that will be necessary to accommodate proposed substitution.
   3. Detailed comparison of significant qualities of proposed substitution with those of the Work specified. Include annotated copy of applicable Specification Section. Significant qualities

may include attributes such as performance, weight, size, durability, visual effect, sustainable design characteristics, warranties, and specific features and requirements indicated. Indicate deviations, if any, from the Work specified.

D. Product Data, including drawings and descriptions of products and fabrication and installation procedures.

E. Samples, where applicable or requested.

F. Certificates and qualification data, where applicable or requested.

G. List of similar installations for completed projects with project names and addresses and names and addresses of architects and owners.

H. Material test reports from a qualified testing agency indicating and interpreting test results for compliance with requirements indicated.

I. Research reports evidencing compliance with building code in effect for Project, and applicable code organization.

J. Detailed comparison of Contractor's construction schedule using proposed substitution with products specified for the Work, including effect on the overall Contract Time. If specified product or method of construction cannot be provided within the Contract Time, include letter from manufacturer, on manufacturer's letterhead, stating date of receipt of purchase order, lack of availability, or delays in delivery.

K. Cost information, including a proposal of change, if any, in the Contract Sum.

L. Contractor's certification that proposed substitution complies with requirements in the Contract Documents except as indicated in substitution request, is compatible with related materials, and is appropriate for applications indicated.

M. Contractor's waiver of rights to additional payment or time that may subsequently become necessary because of failure of proposed substitution to produce indicated results.

1.5 QUALITY ASSURANCE

A. Compatibility of Substitutions: Investigate and document compatibility of proposed substitution with related products and materials. Engage a qualified testing agency to perform compatibility tests recommended by manufacturers.

1.6 PROCEDURES

A. Coordination: Revise or adjust affected work as necessary to integrate work of the approved substitutions.

PART 2 - PRODUCTS

2.1 SUBSTITUTIONS

A. Substitutions for Cause: Submit requests for substitution immediately on discovery of need for change, but not later than 15 days prior to time required for preparation and review of related submittals.

1. Conditions: Architect will consider Contractor's request for substitution when the following conditions are satisfied. If the following conditions are not satisfied, Architect will return requests without action, except to record noncompliance with these requirements:
   a. Requested substitution is consistent with the Contract Documents and will produce indicated results.
   b. Substitution request is fully documented and properly submitted.
   c. Requested substitution will not adversely affect Contractor's construction schedule.
   d. Requested substitution has received necessary approvals of authorities having jurisdiction.
   e. Requested substitution is compatible with other portions of the Work.
   f. Requested substitution has been coordinated with other portions of the Work.
   g. Requested substitution provides specified warranty.
   h. If requested substitution involves more than one contractor, requested substitution has been coordinated with other portions of the Work, is uniform and consistent, is compatible with other products, and is acceptable to all contractors involved.

B. Substitutions for Convenience: Architect will consider requests for substitution if received within 30 days after the Notice of Award. Requests received after that time may be considered or rejected at discretion of Architect.
   1. Conditions: Architect will consider Contractor's request for substitution when the following conditions are satisfied. If the following conditions are not satisfied, Architect will return requests without action, except to record noncompliance with these requirements:
      a. Substitutions may be considered when a product becomes unavailable through no fault of the Contractor.
      b. Requested substitution offers Owner a substantial advantage in cost, time, energy conservation, or other considerations, after deducting additional responsibilities Owner must assume. Owner's additional responsibilities may include compensation to Architect for redesign and evaluation services, increased cost of other construction by Owner, and similar considerations.
      c. Requested substitution does not require extensive revisions to the Contract Documents.
      d. Requested substitution is consistent with the Contract Documents and will produce indicated results.
      e. Substitution request is fully documented and properly submitted.
      f. Requested substitution will not adversely affect Contractor's construction schedule.
      g. Requested substitution has received necessary approvals of authorities having jurisdiction.
      h. Requested substitution is compatible with other portions of the Work.
      i. Requested substitution has been coordinated with other portions of the Work.
      j. Requested substitution provides specified warranty.
      k. If requested substitution involves more than one contractor, requested substitution has been coordinated with other portions of the Work, is uniform and consistent, is compatible with other products, and is acceptable to all contractors involved.

PART 3 - EXECUTION

3.1 SUBSTITUTION SUBMITTAL PROCEDURES

A. Document each request with complete data substantiating compliance of proposed substitution with Contract Documents.

B. Substitution request must be completed with all required information. Incomplete substitution requests will be returned with no action taken.
   1. Form: Refer to Document 006325 - Substitution Request Form - Substitution Request (After the Bid).

C. Substitutions will not be considered when they are indicated or implied on shop drawing or product data submittals, without separate written request, or when acceptance will require revision to the Contract Documents.

D. Submit 1 copy (electronic) of request for substitution for consideration. Limit each request to one proposed substitution.

E. Submit shop drawings, product data, and certified test results attesting to the proposed product equivalence. Burden of proof is on proposer.

F. Substitution request does not replace the required submittal. Submittals for any items accepted through the Substitution Request procedure are still required.

3.2 ARCHITECTS ACTION

A. If necessary, Architect will request additional information or documentation for evaluation within 7 days of receipt of a request for substitution.

B. Architect will notify Contractor of acceptance or rejection of proposed substitution within:
   1. 14 days of receipt of request, or 7 days of receipt of additional information or documentation, whichever is later.

C. Forms of Acceptance:
   1. Architect's Supplemental Instructions (ASI) for minor changes in the Work.
   2. Notice of Clarifications (NOC)
   3. Construction Change Directive:
      a. Architect may issue a directive, signed by Owner, instructing Contractor to proceed with a change for subsequent inclusion in a Change Order.
      b. Documentation will describe changes in Work and designate method of determining any change to Contract Sum or Contract Time. Promptly execute change.
   4. Change Orders:
      a. AIA Document G701.

D. The Architect will notify Contractor in writing of decision to accept or reject request.

3.3 CLOSEOUT ACTIVITIES

A. See Section 017800 - Closeout Procedures and Submittals, for closeout submittals.

B. Include completed Substitution Request Forms as part of the Project record. Include both approved and rejected Requests.

END OF SECTION

SECTION 012600 - CONTRACT MODIFICATION PROCEDURES

PART 1 - GENERAL

1.1 SUMMARY

A. This Section specifies administrative and procedural requirements for handling and processing Contract modifications.

1.2 RELATED SECTIONS :

A. Section 012500 - Substitution Procedures: For administrative procedures for handling requests for substitutions made after Contract award.

1.3 DEFINITIONS

A. Modification: A Modification is defined as one of the following:
   1. An Architect's Supplemental Instruction; (ASI)
   2. Notice of Clarification; (NOC)
   3. A Change Order; (CO)
   4. A Construction Change Directive; (CCD)
   5. Or a written amendment to the Contract signed by Owner, Architect, and Contractor.

1.4 MINOR CHANGES IN THE WORK

A. Architect will issue supplemental instructions authorizing Minor Changes in the Work, not involving adjustment to the Contract Sum or the Contract Time in the form of an ASI.

1.5 CHANGE ORDER REQUESTS

A. Owner-Initiated Change Order Requests: Architect will issue a detailed description of proposed changes in the Work that may require adjustment to the Contract Sum or the Contract Time. If necessary, the description will include supplemental or revised Drawings and Specifications.
   1. Proposal Requests issued by Architect are for information only. Do not consider them instructions either to stop work in progress or to execute the proposed change.
   2. Within 10 days after receipt of Change Order Request, submit a quotation estimating cost adjustments to the Contract Sum and the Contract Time necessary to execute the change.
   3. Include a list of quantities of products required or eliminated and unit costs, with total amount of purchases and credits to be made. If requested, furnish survey data to substantiate quantities.
   4. Indicate applicable taxes, delivery charges, equipment rental, and amounts of trade discounts.
   5. Include costs of labor and supervision directly attributable to the change.
   6. Include an updated Contractor's Construction Schedule that indicates the effect of the change, including, but not limited to, changes in activity duration, start and finish times, and activity relationship. Use available total float before requesting an extension of the Contract Time.

B. Contractor-Initiated Proposals: If latent or unforeseen conditions require modifications to the Contract, Contractor may propose changes by submitting a Change Order Request to Architect.

1. Include a statement outlining reasons for the change and the effect of the change on the Work. Provide a complete description of the proposed change. Indicate the effect of the proposed change on the Contract Sum and the Contract Time.
2. Include a list of quantities of products required or eliminated and unit costs, with total amount of purchases and credits to be made. If requested, furnish survey data to substantiate quantities.
3. Indicate applicable taxes, delivery charges, equipment rental, and amounts of trade discounts.
4. Include costs of labor and supervision directly attributable to the change.
5. Include an updated Contractor's Construction Schedule that indicates the effect of the change, including, but not limited to, changes in activity duration, start and finish times, and activity relationship. Use available total float before requesting an extension of the Contract Time.
6. Comply with requirements in Section 012500 - Substitution Procedures if the proposed change requires substitution of one product or system for product or system specified.

1.6 CHANGE ORDER PROCEDURES

A. On Owner's approval of a Change Order Request, Architect will issue a Change Order for signatures of Owner and Contractor on AIA Document G701. Change Orders may only be approved if the Architect agrees and signs the Change Order form.

1.7 CONSTRUCTION CHANGE DIRECTIVE

A. Construction Change Directive: Architect may issue a Construction Change Directive on AIA Document G714. Construction Change Directive instructs Contractor to proceed with a change in the Work, for subsequent inclusion in a Change Order.
   1. Construction Change Directive contains a complete description of change in the Work. It also designates method to be followed to determine change in the Contract Sum or the Contract Time.

B. Documentation: Maintain detailed records on a time and material basis of work required by the Construction Change Directive.
   1. After completion of change, submit an itemized account and supporting data necessary to substantiate cost and time adjustments to the Contract.

1.8 OVERHEAD AND PROFIT FEES APPLICABLE FOR CHANGES IN THE WORK:

A. Refer to Document _____, Conformed General Conditions of the Contract for Construction.
   1. The cost of the Work is defined as the cost of labor and materials only.
      a. For work performed by the Contractor’s own forces - fifteen percent (15%) of the cost of labor and materials up to $10,000 dollars.
      b. For work performed by the Contractor’s own forces - ten percent (10%) of the cost of labor and materials over $10,000 dollars.
      c. For work performed by the Subcontractors - the Contractor is allowed - ten percent (10%) of the cost of the work performed by the Subcontractor up to $10,000 dollars.
      d. For the work performed by the Subcontractors - the Contractor is allowed - five percent (5%) of the cost of the work performed by the Subcontractor over $10,000 dollars.
      e. For work performed by the Subcontractor’s own forces - the subcontractor is allowed fifteen percent (15%) of the cost of labor and materials up to $10,000.

f. For work performed by the Subcontractor's own forces - the Subcontractor is allowed ten percent (10%) of the cost of labor and materials over $10,000 dollars.
g. The overhead and profit allowed above shall include the cost of all bonds and insurance.

B. Refer to Document _____.
1. Change Orders which involve an increase in the GMP as provided in Paragraph 7.1 of the AIA A201, shall consist of each subcontractor item, along with its actual cost as documented by the subcontractor with subcontractors mark-ups as scheduled below, and the CMAR.
a. For work performed by the Subcontractor's own forces - the subcontractor is allowed fifteen percent (15%) of the cost of labor and materials up to $10,000.
b. For work performed by the Subcontractor's own forces - the Subcontractor is allowed ten percent (10%) of the cost of labor and materials over $10,000 dollars.
c. For work performed by the CMAR's own forces - the CMAR is allowed ten percent (10%) of the cost of labor and materials up to $10,000.
d. For work performed by the CMAR's own forces - the CMAR is allowed ten percent (5%) of the cost of labor and materials over $10,000 dollars.
e. The overhead and profit allowed above shall include the cost of all bonds and insurance.

PART 2 - PRODUCTS - NOT USED

PART 3 - EXECUTION - NOT USED

END OF SECTION

SECTION 012613 - REQUEST FOR INFORMATION

PART 1 GENERAL

1.1 SUMMARY

A. Section Includes: Requirements for Request for Information / Interpretation (RFI).

1.2 DEFINITIONS

A. Request For Information / Interpretation (RFI):
   1. A document submitted by the Contractor requesting clarification of a portion of the Contract Documents, hereinafter referred to as RFI.
   2. A properly prepared Request for Information / Interpretation shall include a detailed written statement that indicates the specific Drawing or Specification in need of clarification and the nature of the clarification requested.
      a. Prepare using an electronic version of the Document 006313 - Request for Information Form. Each page of attachments to the RFI shall bear the RFI number at the upper left corner. OR
         1) Use AIA G716 - Request for Information . OR
         2) Use CSI/CSC Form 13.2A - Request for Interpretation.
      b. Drawings shall be identified by sheet number and detail number or location on the drawing sheet.
      c. Specifications shall be identified by section number, article, paragraph and page number.
   3. Requests for Information: Request made by Contractor concerning items not indicated on drawings or contained in Project Manual that is necessary to properly perform the work.
   4. Requests for Interpretation: Request made by Contractor in accordance with Owner's Representative's third party obligations to the contract for construction.
   5. Clouding of the specific item on a drawing or within the specification in question is expected.

B. Improper RFI's: RFI's that are not properly prepared will be returned without review.

C. Frivolous RFI's:
   1. RFI's that request information that is clearly shown on the Contract Documents.
   2. Frivolous RFI's may be returned unanswered or may be processed by the Architect at the Architect's standard hourly rate. The Architect will charge the Owner, and such costs will be deducted from monies still due the Contractor. The Owner and Contractor will be notified by the Architect prior to the processing of frivolous RFI's.

1.3 CONTRACTOR'S REQUESTS FOR INFORMATION

A. RFI's shall be originated by the Contractor and is responsible for reviewing, numbering sequentially, and forwarding all RFI's to the Architect of Record with one (1) copy to Owner.
   1. RFI's from subcontractors or material suppliers shall be submitted through, reviewed by, and signed by the Contractor prior to submittal to the Architect.
   2. RFI's from subcontractors or material suppliers sent directly to the Owner's Representative, Architect or the Architect's consultants shall not be accepted.

B. Content of the RFI:
   1. Forms shall be completely filled in, all request shall be typed.
   2. Include a detailed, legible description of item needing interpretation and the following:

a. Project Name.
b. Date.
c. Name of Contractor, and authoring company.
d. Name of Architect or Engineer.
e. RFI number.
    1) RFI's shall be submitted in numerical order with no breaks in the consecutive numbering.
    2) Each page of attachments to RFI's shall bear the RFI number and shall be consecutively numbered in chronological order.
    3) If an RFI is resubmitted, it MUST have the same number as the original RFI with a suffix identifying it as a resubmittal, for example RFI-002-1, RFI-002-A, or RFI-002-R1.
f. Specification Section number and title and related paragraphs, as appropriate.
g. Drawing number and detail references, as appropriate.
h. Field dimensions and conditions, as appropriate.
i. Contractor's suggested solution(s):
    1) If Contractor's solution(s) impact the Contract Time, Contractor shall state impact in the RFI.
    2) All RFI's must have potential schedule and budget impact noted, when applicable.
j. Attachments: Include drawings, descriptions, measurements, photos, Product Data, Shop Drawings, and other information necessary to fully describe items needing interpretation.
k. Supplementary drawings prepared by Contractor shall include dimensions, thicknesses, structural grid references, and details of affected materials, assemblies, and attachments.

C. Software-Generated RFIs: Software-generated form with substantially the same content as indicated above.
    1. Attachments shall be electronic files in Adobe Acrobat or BlueBeam PDF format.

D. RFI's may be submitted by E-mail.
    1. Address for E-mail will be distributed by the Architect at the Pre-Construction Conference.

E. When the Contractor is unable to determine from the Contract Documents, the material, process or system to be installed, the Architect shall be requested to make a clarification of the indeterminate item as follows:
    1. Contractor shall prepare and submit an RFI to the Architect of Record with one (1) copy to Owner.
    2. RFI's may not be sent directly to the Architect's Consultants. All RFI's shall be sent directly to the Architect.
    3. Non-compliance Reports, Inspection Reports, Substitution Requests, Submittal Requests and Confirmations shall not be submitted as an RFI.

F. Contractor shall carefully study the Contract Documents to assure that the requested information is not available therein. RFI's which request information available in the Contract Documents will be deemed either "improper" or "frivolous" as noted above.

G. Contractor shall endeavor to keep the number of RFI's to a minimum.

H. In cases where RFI's are issued to request clarification of coordination issues, for example, pipe and duct routing, clearances, specific locations of work shown diagrammatically and similar items, the Contractor shall prepare a complete layout of a suggested solution using drawings or sketches drawn to scale, and submit same with the RFI. RFI's which fail to include a suggested

solution will be returned unanswered with a requirement that the Contractor submit a complete request.

I. RFI's shall NOT be used for the following purposes:
   1. To request approval of submittals
   2. To request approval of substitutions,
   3. To request changes which are known to entail additional cost or credit.
   4. To request different methods of performing work other than those drawn and specified.
   5. To request additional time to be added to the Project schedule.

J. In the event the Contractor believes that an RFI response by the Architect results in additional cost or time, Contractor shall not proceed with the work indicated by the RFI until a Construction Change Directive (CCD) is prepared and approved. RFI's shall not automatically justify a cost increase in the work or a change in the project schedule.
   1. Answered RFI's shall not be construed as an approval to perform the additional work.
   2. Unanswered RFI's will be returned with a stamp or notation “Not Reviewed”.

K. Contractor shall prepare and maintain a log of RFI'S, and at any time requested by the Architect and Owner, Contractor shall furnish copies of the log showing outstanding RFI'S. Contractor shall note unanswered RFI's in the log. Logs shall be reviewed as part of weekly construction meetings.

L. It is the Contractor’s responsibility to allow for a reasonable review period for each RFI. Unless an expedited review is requested and agreed upon by the Owner’s Representative, Architect of Record and the Contractor prior; Contractor shall allow no less than 7 Working days review and response time for RFI'S.
   1. RFI's shall state requested date/time for response. However, this requested date/time for response is not a guarantee that the RFI will be answered by that date/time if that date/time is too expeditious.

1.4 ARCHITECT'S RESPONSE TO RFI'S

A. Review Time: Architect will respond and return RFIs to Contractor within seven Working days of receipt. For the purpose of establishing the start of the mandated response period, RFIs received after 12:00 noon will be considered as having been received on the following regular working day.
   1. Architect may determine that additional time is required to respond, and notify contractor in writing of additional days required.
   2. If a review is required of multiple consultants, then the review and response period shall be 7 Working days.
   3. The Architect will endeavor to respond in a timely fashion to RFI's.
   4. Response period may be shortened or lengthened for specific items, subject to mutual agreement, and recorded in a timely manner in progress meeting minutes.

B. Architect will respond to RFI's on one of the following forms:
   1. Properly prepared RFI's:
      a. Response directly upon Request for Information / Interpretation form.
         1) Response to properly prepared RFI's may or may not be made directly upon the RFI form as deemed appropriate by the Architect.
      b. Architect's Supplemental Instruction (ASI).
      c. Request for Proposal (RFP).
      d. Construction Change Directive (CCD).

2. Improper or Frivolous RFI's:
   a. Notification of Processing Fee(s).
   b. Unanswered RFI's will be returned with a stamp or notation: "Not Reviewed".

PART 2 - PRODUCTS - NOT USED

PART 3 - EXECUTION - NOT USED

END OF SECTION

SECTION 013000 - ADMINISTRATIVE REQUIREMENTS

PART 1 GENERAL

1.1 SECTION INCLUDES

A. Project Meetings
   1. Preconstruction meeting.
   2. Site mobilization meeting.
   3. Preinstallation Meetings.
   4. Progress meetings.

B. Progress Photographs.

C. Coordination Drawings.

1.2 RELATED REQUIREMENTS

A. Section 011000 - Summary:

B. Section 012500 - Substitution Procedures. For Substitution Requests.

C. Section 013216 - Construction Progress Schedule: Form, content, and administration of schedules.

D. Section 013300 - Submittal Requirements: for Submittal procedures including Deferred Submittals.

E. Section 014000 - Quality Requirements: Testing Agency Submittals.

F. Section 016000 - Product Requirements: for requirements for submitting comparable product submittals for products by listed manufacturers.

G. Section 017800 - Closeout Procedures and Submittals.

H. Section 017836 - Warranties and Bonds.

1.3 PROJECT COORDINATION

A. Owner's Representative: Daphne Hooper.

B. Cooperate with the Owner's Project Manager in allocation of mobilization areas of site; for field offices and sheds, for Site access, traffic, and parking facilities.

C. During construction, coordinate use of site and facilities through the Project Manager.

D. Comply with Project Manager's procedures for intra-project communications; submittals, reports and records, schedules, coordination drawings, and recommendations; and resolution of ambiguities and conflicts.

E. Comply with instructions of the Project Manager for use of temporary utilities and construction facilities.

F. Coordinate field engineering and layout work under instructions of the Project Manager.

G. Make the following types of submittals to Architect with copies to Project Manager.
   1. Requests for interpretation/information.

2. Requests for substitution.
3. Shop drawings, product data, and samples.
4. Test and inspection reports.
5. Design data.
6. Progress schedules.
7. Coordination drawings.
8. Closeout submittals.

H. Make the following types of submittals to Project Manager.
1. Change order requests.
2. Progress schedules.

PART 2 PRODUCTS - NOT USED.

PART 3 EXECUTION

3.1 PRECONSTRUCTION MEETING

A. Owner will schedule a meeting after Notice of Award.

B. Attendance Required:
1. Owner.
2. Architect.
3. Project Manager.
4. General Contractor / Construction Manager.
5. Sub-Contractors.
6. Special Consultants.
7. Others that are deemed necessary by Owner, Architect and General Contractor.

C. Agenda:
1. Submission of executed bonds and insurance certificates.
2. Discuss items of significance that could affect progress, including the following:
a. Tentative construction schedule.
b. Phasing.
c. Critical work sequencing and long-lead items.
d. Designation of key personnel and their duties.
e. Procedures for processing field decisions and Change Orders.
f. Procedures for RFIs.
g. Procedures for testing and inspecting.
h. Procedures for processing Applications for Payment.
i. Procedures for Submittals.
j. Preparation of Record Documents.
k. Preparation of operating and maintenance manuals.
l. Use of the premises and existing building.
m. Work restrictions.
n. Owner's occupancy requirements.
o. Responsibility for temporary facilities and controls.
p. Construction waste management and recycling.
q. Parking availability.

r. Office, work, and storage areas.
s. Equipment deliveries and priorities.
t. First aid.
u. Security.
v. Progress cleaning.
w. Working hours.
x. Distribution of Contract Documents.

3. Submission of list of Subcontractors, list of Products, schedule of values, and progress schedule.
4. Designation of personnel representing the parties to Contract, Owner, and Architect of Record.
5. Procedures and processing of field decisions, submittals, substitutions, applications for payments, proposal request, Change Orders, and Contract closeout procedures.
6. Special requirements.

3.2 SITE MOBILIZATION MEETING

A. Owner will schedule a meeting at the Project site prior to Contractor occupancy.

B. Attendance Required:
1. Contractor.
2. Owner.
3. Architect.
4. Special Consultants.
5. Contractor's Superintendent.
6. Major Subcontractors.
7. Other's that are deemed necessary by Owner, Architect and Contractor.

C. Agenda:
1. Use of premises by Owner and Contractor.
2. Owner's requirements and partial occupancy prior to completion.
3. Construction facilities and controls provided by Owner.
4. Temporary utilities provided by Owner.
5. Survey and building layout.
6. Security and housekeeping procedures.
7. Schedules.
8. Application for payment procedures.
9. Procedures for testing.
10. Procedures for maintaining record documents.
11. Requirements for start-up of equipment.
12. Inspection and acceptance of equipment put into service during construction period.

D. Record minutes and distribute copies within two days after meeting to participants, with copies to Architect, Project Manager, participants, and those affected by decisions made.

3.3 PREINSTALLATION MEETINGS

A. When required in individual specification sections, convene a preinstallation meeting at the site prior to commencing work of the section.

B. Preinstallation Meetings: Conduct a preinstallation conference at Project site before each construction activity that requires coordination with other construction.
   1. Attendees: Installer and representatives of manufacturers and fabricators involved in or affected by the installation and its coordination or integration with other materials and installations that have preceded or will follow, shall attend the meeting. Advise Architect 1 week (7 days) in advance of scheduled meeting dates.
   2. Agenda: Review progress of other construction activities and preparations for the particular activity under consideration, including requirements for the following:
      a. The Contract Documents.
      b. Options.
      c. Related RFIs.
      d. Related Change Orders.
      e. Purchases.
      f. Deliveries.
      g. Submittals.
      h. Review of mockups.
      i. Possible conflicts.
      j. Trade responsibilities.
      k. Compatibility problems.
      l. Time schedules.
      m. Weather limitations.
      n. Manufacturer's written recommendations.
      o. Warranty requirements.
      p. Compatibility of materials.
      q. Acceptability of substrates.
      r. Temporary facilities and controls.
      s. Space and access limitations.
      t. Regulations of authorities having jurisdiction.
      u. Testing and inspecting requirements.
      v. Installation procedures.
      w. Coordination with other work.
      x. Required performance results.
      y. Protection of adjacent work.
      z. Protection of construction and personnel.

C. Record significant conference discussions, agreements, and disagreements, including required corrective measures and actions.

D. Reporting: Record minutes of the meeting.
   1. Distribute copies within two days after meeting to participants, with 1 copy to Architect, Owner, participants, and those affected by decisions made.

E. Do not proceed with installation if the conference cannot be successfully concluded. Initiate whatever actions are necessary to resolve impediments to performance of the Work and reconvene the conference at earliest feasible date.

3.4 PROGRESS MEETINGS

A. Project Manager shall schedule and administer meetings throughout progress of the Work.

B. Project Coordinator shall make arrangements for meetings, prepare agenda with copies for participants, preside at meetings.

C. Attendance Required: Job superintendent, major SubContractors and suppliers, Owner, Architect, others as appropriate to agenda topics for each meeting.

D. Agenda:
   1. Review minutes of previous meetings.
   2. Review of Work progress.
   3. Field observations, problems, and decisions.
   4. Identification of problems that impede, or will impede, planned progress.
   5. Review of submittals schedule and status of submittals.
   6. Review of off-site fabrication and delivery schedules.
   7. Maintenance of progress schedule.
   8. Corrective measures to regain projected schedules.
   9. Planned progress during succeeding work period.
   10. Coordination of projected progress.
   11. Maintenance of quality and work standards.
   12. Effect of proposed changes on progress schedule and coordination.
   13. Other business relating to Work.

E. Record minutes and distribute copies within 5 days after meeting to participants, with copies to Architect, Owner, participants, and those affected by decisions made.

F. An electronic copy of the meeting minutes as well as the current submittal schedule, submittal log and RFI log must be submitted after each meeting. This upload must occur within one (1) business day following the end of the progress meeting.
   1. When submitted electronically the meeting minutes and supplemental logs must be in Portable Document Format (.pdf)
      a. Prepare file for submittal by converting it to PDF using Adobe Acrobat or BlueBeam Revu, latest version. Legible scanned PDF files of plain paper documents are acceptable, but PDF sets created by electronically converting files using Adobe Acrobat or BlueBeam Revu are preferable. Scanned documents are more difficult to annotate, are usually less legible, and produce larger attachment sizes.

3.5 CONSTRUCTION PROGRESS SCHEDULE - SEE SECTION 013216.

3.6 PROGRESS PHOTOGRAPHS

A. Submit photographs with each application for payment, taken not more than 3 days prior to submission of application for payment.

B. Submit new photographs at least once a month, within 3 days after exposure.

C. Maintain one set of all photographs at project site for reference; same copies as submitted, identified as such.

D. Photography Type: Digital; electronic files.

E. Provide photographs of site and construction throughout progress of Work produced by an experienced photographer, acceptable to Architect.

F. In addition to periodic, recurring views, take photographs of each of the following events:
   1. Completion of site clearing.
   2. Excavations in progress.
   3. Foundations in progress and upon completion.
   4. Underground utility lines.
   5. Utility lines running below slab on grade.
   6. Structural framing in progress and upon completion.
   7. Enclosure of building, upon completion.
   8. Final completion, minimum of ten (10) photos.

G. Views:
   1. Provide aerial photographs from four cardinal views at each specified time, until structure is enclosed.
   2. Provide non-aerial photographs from four cardinal views at each specified time, until Date of Substantial Completion.
   3. Consult with Architect for instructions on views required.
   4. Provide correct exposure and focus, high resolution and sharpness, maximum depth of field, and minimum distortion.
   5. Point of View Sketch: Provide sketch identifying point of view of each photograph.

H. Digital Photographs: 24 bit color, minimum resolution of 1024 by 768, in JPG format; provide files unaltered by photo editing software.
   1. Delivery Medium: On photo CD.
   2. File Naming: Include project identification, date and time of view, and view identification.
   3. Point of View Sketch: Include digital copy of point of view sketch with each electronic submittal; include point of view identification in each photo file name.
   4. PDF File: Assemble all photos into printable pages in PDF format, with 2 to 3 photos per page, each photo labeled with file name; one PDF file per submittal.

3.7 COORDINATION DRAWINGS

A. Provide information required by Project Coordinator for preparation of coordination drawings.

B. Prepare and submit Coordination Drawings when required by other Sections.
   1. For places where clearances are limited, or for places where several elements of the Work must be located with precision in order to fit into available space, or requested by the Project Manager, prepare and submit a PDF file containing color coded Coordination Drawings (Shop Drawings) at a suitable scale, showing the required dimensions, and including, but not limited to, the following:
      a. Lights.
      b. Audio/video devices.
      c. Fire protection devices.
      d. Reflected ceiling plan and/or elevations.
      e. Elevations.
      f. Fire sprinklers.
      g. HVAC devices.
      h. Expansion joints.

1) A project proposal drawing that illustrates the system installed in wall or ceiling construction that is specific to the project. Typical catalog cut sections will not be accepted.

i. Other equipment, appurtenances or drawings as required to provide complete coordination of all involved items.

2. Content: Project-specific information, drawn accurately to scale. Do not base Coordination Drawings on reproductions of the Contract Documents or standard printed data. Include the following information, as applicable:
   a. Prepare and submit coordinated composite layouts of the mechanical systems and equipment for all areas, drawn at a scale not less than 1/4" per foot showing on both plan and elevation, including, but not limited to, all equipment, ducts, pipe sleeves, piping including plumbing and sprinkler system, lighting, special supports and other items contained within the space and finished ceiling. Show mechanical and electrical services as well as architectural and structural features drawn to scale. Provide composite drawings for all areas such as corridors, specialty spaces, mechanical rooms, shafts, tunnels, and all congested areas. Distribute copies of composite drawings to all trades to assure a complete, coordinated copies of composite drawings to all trades to assure a complete, coordinated installation of work within the space available. Include elevation drawings indicating finish ceiling heights, and heights above finished floor to bottom of ductwork, piping and conduit.
   b. Indicate functional and spatial interrelationships of components of architectural, structural, civil, mechanical, and electrical systems.
   c. Indicate required installation sequences.
   d. Indicate dimensions shown on the Contract Drawings and make specific note of dimensions that appear to be in conflict with submitted equipment and minimum clearance requirements. Provide alternate sketches to Architect for resolution of such conflicts. Minor dimension changes and difficult installations will not be such conflicts. Minor dimension changes and difficult installations will not be considered changes to the Contract.
   e. Submit certificate guaranteeing that coordination drawings have been done and are being utilized at the project site.
   f. Call attention in advance to Architect of any dimensional or detail information needed to complete the coordination drawings.
   g. The General Contractor and Sub-Contractors may use the Architect's CADD background drawings but must execute the Electronic Data Transfer Agreement obtained from Architect.

C. Review drawings prior to submission to Architect and Project Manager.

D. Number of Copies: Submit (1) electronic copies of each submittal. Architect will return upon review and mark-up.

END OF SECTION

SECTION 013216 - CONSTRUCTION PROGRESS SCHEDULE

PART 2 PRODUCTS - NOT USED

PART 3 EXECUTION

END OF SECTION

SECTION 013300 - SUBMITTAL REQUIREMENTS

PART 1 GENERAL

1.1 SECTION INCLUDES

A. Delegated-Design Services.

B. Submittals:
   1. Submittal Schedule.
   2. Submittals for Review.
   3. Submittals for Information.
   4. Submittals for Project Closeout.
   5. Number of copies of submittals.
   6. Submittal procedures.

C. Engineered Deferred Submittals.

1.2 RELATED REQUIREMENTS

A. Section 011000 - Summary:

B. Section 012500 - Substitution Procedures: For Substitution Requests.

C. Section 013216 - Construction Progress Schedule: Form, content, and administration of schedules.

D. Section 014000 - Quality Requirements: for Testing Agency Submittals.

E. Section 016000 - Product Requirements: for requirements for submitting comparable product submittals for products by listed manufacturers.

F. Section 017300 - Execution Requirements:

G. Section 017700 - Closeout Procedures.

H. Section 019113 - General Commissioning Requirements: Additional procedures for submittals relating to commissioning.
   1. Where submittals are indicated for review by both Architect and the Commissioning Authority, submit one extra and route to Architect first, for forwarding to the Commissioning Authority.
   2. Where submittals are not indicated to be reviewed by Architect, submit directly to the Commissioning Authority; otherwise, the procedures specified in this section apply to commissioning submittals.

1.3 DELEGATED-DESIGN SERVICES

A. Performance and Design Criteria: Where professional design services or certifications by a design professional are specifically required of General Contractor by the Contract Documents, provide products and systems complying with specific performance and design criteria indicated.
   1. If criteria indicated are not sufficient to perform services or certification required, submit a written request for additional information to Architect.

B. Delegated-Design Services Certification: In addition to Shop Drawings, Product Data, and other required submittals, submit digitally signed PDF electronic file and three paper copies of

certificate, signed and sealed by the responsible design professional, for each product and system specifically assigned to General Contractor to be designed or certified by a design professional.

1. Indicate that products and systems comply with performance and design criteria in the Contract Documents. Include list of codes, loads, and other factors used in performing these services.

C. Refer to Paragraph 3.7 - Engineered Deferred Submittals.

PART 2 PRODUCTS - NOT USED.

PART 3 EXECUTION

3.1 SUBMITTALS SCHEDULE

A. After the General Contractor's Construction Schedule has been developed and accepted, prepare a complete schedule of submittals.
   1. Two weeks after notice to proceed, General Contractor shall prepare the Submittals Requirements Schedule in detail:
      a. Use one line per item for each section and paragraph number
      b. Provide one copy for the Owner and one copy for the Architect of Record.
      c. Obtain Architect of Record's and Project Manager's approvals
   2. Coordinate the Submittal Schedule with the General Contractor's Construction Schedule, Schedule of Values, Subcontracts, list of products and other pertinent information.
   3. Coordinate submittals into logical groupings to facilitate interrelation of several items:
      a. Finishes which involve Architect of Record selection of colors, textures or patterns.
      b. Associated items which require correlation for efficient function or for installation.
      c. Provide:
         1) All submittals required by a particular section at one time.
         2) Shop drawings, schedules, product data, coordination drawings, samples, color charts and other information as required (whether listed or not) for Architect of Record's complete evaluation.
         3) Define the deferred submittal schedule.
      d. Incomplete information or partial submittals will be cause for rejection.
   4. Prepare the schedule in chronological order and provide the following:
      a. Scheduled date for the initial submittal.
      b. Section number per this specification.
      c. Submittal category (Shop Drawing, Product Data or Sample).
      d. Name of General Contractor.
      e. Description of the part of the work covered by this submittal.
      f. Date required for this submittal to be returned but not less than the stipulated date herein.

B. After approval of the Submittal Schedule, distribute in print and electronically in pdf format to the Owner's representative, Architect, subcontractors and all other parties required to comply with the dates indicated in the Submittal Schedule.
   1. Submit the Submittal Schedule within 10 days of the date required for submittal of the General Contractor's Construction Schedule.

C. Update and reissue the Submittal Schedule after revised dates, agreed upon by the affected parties, have been approved.

D. Submittal schedule shall be updated periodically to reflect changes in the construction schedule.

3.2 SUBMITTALS FOR REVIEW

A. Submittals shall be numbered according to Architect's Project Manual of Specifications.

B. When the following are specified in individual sections, submit them for review:
   1. Product data: Collect information into a single submittal for each element of construction and type of product or equipment.
      a. Submit only pages which are pertinent. Mark each copy of standard printed data to identify relevant products and the related Specification Section and Article Number.
      b. If information must be specially prepared for submittal because standard published data are not suitable for use, submit as Shop Drawings, not as Product Data.
      c. Mark each copy of each submittal to show which products and options are applicable.
   2. Include the following information, as applicable:
      a. Manufacturer's catalog cuts.
      b. Manufacturer's product specifications.
      c. Performance characteristics and capacities
      d. Finishes
         1) Standard color charts.
      e. Component parts
      f. Statement of compliance with specified referenced standards.
      g. Testing by recognized testing agency.
      h. Application of testing agency labels and seals.
      i. Notation of coordination requirements.
      j. Other information as required by the individual specification sections
      k. Availability and delivery time information.
   3. For equipment, include the following in addition to the above, as applicable:
      a. Wiring diagrams showing factory-installed wiring.
      b. Printed performance curves.
      c. Operational range diagrams.
      d. Dimensions
      e. Clearances required to other construction, if not indicated on accompanying Shop Drawings.
      f. Modify manufacturer's standard schematic drawings and diagrams to supplement standard information and to provide information specifically applicable to the Work. Delete information that is not applicable.
      g. Submit Product Data before or concurrent with Samples.
      h. Submit Product Data in the following format:
         1) PDF electronic file.

C. Shop drawings: Submit newly prepared Project-specific information, drawn accurately to scale.
   1. Do not reproduce Contract Documents or copy standard product information as the basis of Shop Drawings.
      a. Submittals received on the Architect's Titleblock will be automatically rejected.

2. Present in a clear and thorough manner Job Specific shop drawings. (Generic shop drawings will be rejected.) Title each drawing sheet with Project Name and Number; identify each element of the drawings by reference to Sheet Number and Detail, Specification Section, Schedule or Room Number listed in the Contract Documents and CAD Standards Manual.
3. Standard information prepared without specific reference to the Project is not a Shop Drawing.
4. Identify field dimensions; show relation to adjacent or critical features of Work or Products.
5. Preparation: Fully illustrate requirements in the Contract Documents. Include the following information, as applicable:
   a. Identification of products.
   b. Schedules.
   c. Compliance with specified standards.
   d. Notation of coordination requirements.
   e. Notation of dimensions established by field measurement.
   f. Relationship and attachment to adjoining construction clearly indicated.
   g. Seal and signature of professional engineer if specified.
6. Scale Required: Unless otherwise specifically directed by Architect of Record, make all shop drawings accurate to a scale sufficiently large enough to show all pertinent features of the item and its methods of connection to the Work.
7. Submit Shop Drawings in the following format:
   a. PDF electronic file.
8. Provide a 5" x 4" blank space on each submittal sheet or sample label for Architect of Record's review stamp.

D. Samples for Selection:
   1. Provide 4 of each sample or color chart.
   2. Submit full range of manufacturer's standard finishes, except when more restrictive requirements are specified, indicating colors, textures, and patterns, for Architect of Record's selection. ALL color charts shall be originals, no photocopies allowed.
   3. Submit samples to illustrate functional characteristics of products, including parts and attachments.
   4. Label each sample with Project Name and Number, Interior Design Specification Number (as applicable), and Room Number.
   5. Mock-up: Provide field samples of finishes and assemblies at the site as required by individual specification sections.
      a. Install each sample or assembly complete and finished.
      b. Locate as directed by the Owner or Architect of Record.
      c. Acceptable mock-up may or may not remain as part of the Work at the Architect of Record's discretion.

E. Samples for Verification:
   1. Provide 4 of each sample or color chart.
   2. Submit full range of manufacturer's standard finishes, except when more restrictive requirements are specified, indicating colors, textures, and patterns, for Architect of Record's selection. ALL color charts shall be originals, no photocopies allowed.
   3. Submit samples to illustrate functional characteristics of products, including parts and attachments.

4. Label each sample with Project Name and Number, Interior Design Specification Number (as applicable), and Room Number.

F. Samples will be reviewed only for aesthetic, color, or finish selection.
   1. Submit sample of material in size, finish, texture and color as required by the specific specification section and indicating the range of any variations that may occur.

G. After review, provide copies and distribute in accordance with **Submittal Procedures** article below and for record documents purposes described in Section 017800 - Closeout Procedures and Submittals.

H. Fire Alarm/Fire Sprinkler System Shop Drawings shall be submitted to submittal to the Architect whose approval shall be obtained prior to the submittal to the state and local Fire Marshall.

3.3 SUBMITTALS FOR INFORMATION:

A. When the following are specified in individual sections, submit them for information:
   1. Design data.
   2. LEED submittals and reports.
   3. Certificates.
   4. Test reports.
   5. Inspection reports.
   6. Manufacturer's instructions.
   7. Manufacturer's field reports.
   8. _____.
   9. Other types indicated.

B. Submit for Architect's knowledge as Contract Administrator or for Owner. No action will be taken.

3.4 SUBMITTALS FOR PROJECT CLOSEOUT:

A. Submit for Owner's benefit during and after project completion and in accordance with Section 017800 - Closeout Procedures and Submittals.

B. When the following are specified in individual sections, submit them at project closeout:
   1. Project record documents.
   2. Operation and maintenance data.
   3. Warranties & Bonds
   4. Other types as indicated.

3.5 NUMBER OF COPIES OF SUBMITTALS

A. Documents: Submit one electronic copy in PDF format; an electronically-marked up file will be returned. Create PDFs at native size and right-side up; illegible files will be rejected.

B. Documents for Information: Submit one electronic copy to Architect of Record.

C. Extra Copies at Project Closeout: See Section 017800. Make one reproduction of submittal originally reviewed. Submit one extra of submittals for information.

D. Samples: Submit the number specified in individual specification sections or (4) of each if no specific number is specified in the specific section; one of which will be retained by Architect.
   1. After review, produce duplicates.

2. Retained samples will not be returned to Contractor unless specifically so stated.

3.6 SUBMITTAL PROCEDURES

A. General Submittal Procedure Requirements: Prepare and submit submittals required by individual Specification Sections. Types of submittals are indicated in individual Specification Sections.

B. Schedule submittals to expedite the Project and coordinate submission of related items. The General Contractor is solely responsible for coordinating the delivery of submittals, including any necessary corrections and resubmittals, to assure that Architect of Record approval can be obtained without delaying the Work. The General Contractor shall start the submittal process within three weeks after award or as required to meet the Contract Schedule requirements.

C. General: Electronic copies of the digital files of the Construction Documents may be made available by the Architect for the General Contractor's use in the preparation of the Submittals. The Architect nor the General Contractor shall be obligated to use such documents in the preparation of the Submittals.
   1. Transfer of the digital files from the Architect to the General Contractor shall be subject to the Terms and Conditions of a Digital File Transfer Agreement at the time of such transfer.
   2. The use of the digital files prepared by the Architect in the preparation of the Shop Drawings shall not in any way obviate the recipient's responsibility for the proper checking and coordination of dimensions, field conditions, details, member sizes, gauges,quantities, and any other condition as required to facilitate complete and accurate fabrication and erection.

D. Transmit each submittal with approved form.

E. Sequentially number the transmittal form. Revise submittals with original number and a sequential alphabetic suffix.

F. Identify Project Manager, Contractor, Subcontractor or supplier; pertinent drawing and detail number, and specification section number, as appropriate on each copy.

G. Apply Contractor's stamp, signed or initialed certifying that review, approval, verification of Products required, field dimensions, adjacent construction Work, and coordination of information is in accordance with the requirements of the Work and Contract Documents.

H. General Contractor Review:
   1. Review submittals (prior to sending to Architect of Record) to determine and verify field measurements, field construction criteria, manufacturer's catalog numbers, and conformance of submittal with requirements of Contract Documents.
   2. Identify variations from Contract Documents and Product or system limitations which may be detrimental to successful performance of the completed Work.
   3. Coordinate submittals with requirements of Work and Contract Documents.
   4. Sign or initial each sheet of shop drawings and product data or each sample label to certify compliance with the requirements of Contract Documents using a submittal stamp with the following information incorporated:
      a. General Contractor Submittal Approval
      b. By making this Submittal No. _____, (Insert General Contractor's Name) does hereby approve said submittal and does certify that it has determined and verified all materials, field measurements and field construction criteria related thereto, and has checked and

coordinated the information within this submittal with the requirements of the Work and Contract Documents.

c. Signed for the General Contractor: _____ Date: _____.

I. Submittal Mark-ups:
   1. Submittals shall be marked-up as follows:
      a. Contractor Comments: Make all Contractor comments in "Blue" ink.
      b. Design Team will make all comments in "Red" ink.

J. Identify Project number, General Contractor, Subcontractor or supplier; pertinent drawing and detail number, and specification section number, as appropriate on each copy. Architect will not review submittals that do not bear the General Contractor's approval stamp and will return them without action.

K. Apply General Contractor's stamp, signed or initialed certifying that review, approval, verification of Products required, field dimensions, adjacent construction Work, and coordination of information is in accordance with the requirements of the Work and Contract Documents.

L. All submittals **NOT** made through the General General Contractor will be rejected.

M. The Architect will return unsolicited submittals without action.

N. No portion of the Work which requires a shop drawing or sample submission shall be commenced until the submission has been reviewed and returned as approved by Architect of Record.

O. Deliver physical submittals to Architect at business address.

P. For each submittal for the initial review, allow 10 days excluding delivery time to and from the Contractor.
   1. For concurrent review of submittals by Consultants, Owner and other parties, allow 5 additional days excluding time to and from the Contractor.
   2. Extension of review time shall not constitute a basis to automatically extend the Contract time.

Q. For each resubmittal, allow for 10 days excluding time to and from the General Contractor.

R. Submittals and Samples shall be submitted in a timely manner to allow for resubmittal and not cause a delay in the Work.

S. Identify variations from Contract Documents and Product or system limitations that may be detrimental to successful performance of the completed Work.

T. Provide space of approximately 5" x 4" for Contractor and Architect review stamps.
   1. General Contractor shall include the following information on label for processing and recording action taken:
      a. Project name.
      b. Date.
      c. Project number.
      d. Name and address of Architect.
      e. Name and address of General Contractor.
      f. Name and address of Subcontractor.
      g. Name and address of Supplier.
      h. Name of Manufacturer.

i. Unique identifier, including revision number(s).
j. Number and title of appropriate Specification Section.
k. Drawing number and detail references, as appropriate.
l. Other necessary identification.

2. Architect shall mark the action stamp indicating the action taken.

U. When revised for resubmission, identify all changes made since previous submission.
1. The General Contractor shall make any corrections required by the Architect of Record and resubmit.
   a. The General Contractor shall direct specific attention in writing or on the resubmitted shop drawings to revisions other than the correction(s) required by Architect of Record on previous submissions.
   b. When revised for resubmission, identify all changes made since previous submission.
   c. The revised submittal will be identified with the original submittal number plus a suffix to mark it as a resubmittal, i.e. 099900.001-R1, 099900.001a or 099900.001A. If not so identified, the resubmittal will be returned as revise and resubmit with the proper number.
   d. Should the Contractor's resubmittals be returned as Revise and Re-submit after (3) reviews by the Architect; any further reviews may be processed by the Architect, at the Architect's standard hourly rate. The Architect will charge the Owner, and such costs will be deducted from monies still due the Contractor. The Architect will notify the Owner and Contractor prior to the processing of deficient Submittals.

V. Distribute reviewed submittals as appropriate. Instruct parties to promptly report any inability to comply with requirements.h

W. Electronic submittals must be provided in a Portable Document Format (.pdf) file when submitted electronically.
1. Prepare file for submittal by converting it to PDF using BlueBeam Revu, latest version. Legible scanned PDF files of plain paper documents are acceptable, but PDF sets created by electronically converting files using BlueBeam Revu are preferable. Scanned documents are more difficult to annotate, are usually less legible, and produce larger attachment sizes.
2. Ensure that sheets are ready to print out to a PDF format on the appropriate sheet size, with no additional formatting required by the viewer, and with all required information.
3. The option in BlueBeam Revu to print “Documents and Markups” in the “Print What” drop down list on the “Print” options window must be chosen to correctly see all applicable information in the request answer. This will ensure all pertinent information is printed if the document is printed.
4. Electronic signatures and stamps must be utilized on electronic submittals where signatures and stamps are required in Section 3.1 Submittal Schedule items A.1-4 and Section 3.6 Submittal Procedures items A-W above.

X. Substitutions will not be considered when they are indicated or implied on shop drawings, product data submittals or samples without a separate written request complying to the requirement in Section 012500 - Substitution Procedures.

Y. Maintain one (1) set of all approved submittals at the Project Site in the General Contractors office.

3.7 ENGINEERED DEFERRED SUBMITTALS:

A. Definition: Per IBC 2018 International Building Code (IBC) (Section 107.3.4.1).
   1. "*Portions of the design that are not submitted at the time of the (permit) application and that are to be submitted to the building official within a specified period.*"

B. Documents for deferred submittal items shall be submitted to the registered design professional in responsible charge [EOR], (through the Architect of Record), who shall review them and forward them, (through the General Contractor), to the building official with a notation indicating that the deferred documents have been reviewed and found to be in general conformance to the design of the building.

C. Contractor is responsible for making all submittals of deferred items to the Building Officials, (AHJ).

D. Refer to deferred submittal items on the Construction Documents.

E. Deferred Submittals include but are not limited to the following list. Provide as applicable to the Project.
   1. Acoustical ceiling suspension system – with manufacturer instructions required.
   2. Ceiling Framing systems.
   3. Exterior wall framing systems.
   4. Auxiliary power systems.
   5. Awnings
   6. Bleachers (interior) (seating layout must be shown at time of submittal).
   7. Electrical System Plans, specifications and calculations.
   8. Emergency call system.
   9. Exit illumination.
   10. Through-penetration fire stop systems and Spray fireproofing submittal data.
   11. Curtain wall systems, Window wall systems or storefronts with spans greater than 10 feet.
   12. Glass guardrails.
   13. Glazing systems.
   14. HVAC system plans, specifications and calculations.
   15. Intercom system.
   16. Metal guardrails and handrails.
   17. Plumbing system plans, specifications and calculations.
   18. Post-tensioned concrete structural members or panels.
   19. Pre-cast concrete structural members or panels.
   20. Prefabricated stair units to include steel, aluminum, or pre-cast concrete stairs.
   21. Prefabricated wall panel and exterior wall systems - precast concrete, glass fiber reinforced concrete, etc.
   22. Pre-stressed concrete structural members or panels.
   23. Raised access floor systems.
   24. Shelving systems and steel storage racks
   25. Skylights (do not defer if Engineering reports, or complete information is available).
   26. Smoke and heat vents.
   27. Specialty retaining walls.
   28. Stone veneer.
   29. Terra cotta veneer wall systems.

30. Wooden, steel, or composite floor or roof trusses.
31. Elevator shop drawings including guide rails and support brackets.
32. Stage rigging.
33. Type I Hood and Fire Supression systems.

F. Deferred submittal documents and drawings must be submitted and approved prior to the construction/installation of the deferred item.

G. All pre-engineered, pre-fabricated, pre-manufactured or other products designed after issuance of a permit must be designed for loads and deflection criteria as required by the applicable edition of the International Building Code (IBC).

END OF SECTION

SECTION 014000 - QUALITY REQUIREMENTS

PART 1 GENERAL

1.1 SECTION INCLUDES

A. Submittals.

B. Quality assurance.

C. References and standards.

D. Testing and inspection agencies and services.

E. Control of installation.

F. Mock-ups.

G. Tolerances.

H. Manufacturers' field services.

I. Defect Assessment.

1.2 RELATED REQUIREMENTS

A. Section 01 30 00 - Administrative Requirements:

B. Section 013300 - Submittal Requirements: Deferred Submittals

C. Section 014216 - Definitions.

D. Section 014533 - Code-Required Special Inspections and Procedures

E. Section 01 60 00 - Product Requirements:

1.3 REFERENCE STANDARDS

A. ASTM C1021 - Standard Practice for Laboratories Engaged in Testing of Building Sealants; 2008 (Reapproved 2019).

B. ASTM C1077 - Standard Practice for Agencies Testing Concrete and Concrete Aggregates for Use in Construction and Criteria for Testing Agency Evaluation; 2017.

C. ASTM C1093 - Standard Practice for Accreditation of Testing Agencies for Masonry; 2022.

D. ASTM D3740 - Standard Practice for Minimum Requirements for Agencies Engaged in Testing and/or Inspection of Soil and Rock as Used in Engineering Design and Construction; 2019.

E. ASTM E329 - Standard Specification for Agencies Engaged in Construction Inspection, Testing, or Special Inspection; 2021.

F. ASTM E543 - Standard Specification for Agencies Performing Nondestructive Testing; 2021.

G. ASTM E699 - Standard Specification for Agencies Involved in Testing, Quality Assurance, and Evaluating of Manufactured Building Components; 2016.

H. IAS AC89 - Accreditation Criteria for Testing Laboratories; 2021.

1.4 SUBMITTALS

A. See Section 013300 - Submittal Requirements, for submittal procedures.

B. Designer's Qualification Statement: Submit for Architect's knowledge as contract administrator, or for Owner's information.
   1. Include information for each individual professional responsible for producing, or supervising production of, design-related professional services provided by Contractor.
      a. Full name.
      b. Professional licensure information.
      c. Statement addressing extent and depth of experience specifically relevant to design of items assigned to Contractor.

C. Design Data: Submit for Architect's knowledge as contract administrator for the limited purpose of assessing compliance with information given and the design concept expressed in the Contract Documents, or for Owner's information.
   1. Include calculations that have been used to demonstrate compliance to performance and regulatory criteria provided, and to determine design solutions.
   2. Include required product data and shop drawings.
   3. Include a statement or certification attesting that design data complies with criteria indicated, such as building codes, loads, functional, and similar engineering requirements.
   4. Include signature and seal of design professional responsible for allocated design services on calculations and drawings.

D. Test Reports: After each test/inspection, promptly submit (within 24 hours) the listed number of copies:
   1. Distribution:
      a. 1 copy to the Architect.
      b. 1 copy to the Structural Engineer.
      c. 2 copies to the Contractor.
      d. 1 copy to the Owner's Representative.
   2. Include:
      a. Date issued.
      b. Project title and number.
      c. Name of inspector.
      d. Date and time of sampling or inspection.
      e. Identification of product and specifications section.
      f. Location in the Project.
      g. Type of test/inspection.
      h. Date of test/inspection.
      i. Results of test/inspection.
      j. Compliance with Contract Documents.
      k. When requested by the Architect, Owner's Representative, or the Contractor; provide interpretation of results.
   3. Test report submittals are for Architect's knowledge as contract administrator for the limited purpose of assessing compliance with information given and the design concept expressed in the Contract Documents, or for Owner's information.

E. Certificates: When specified in individual specification sections, submit certification by the manufacturer and Contractor or installation/application subcontractor to Architect, in quantities specified for Product Data.
   1. Indicate material or product complies with or exceeds specified requirements. Submit supporting reference data, affidavits, and certifications as appropriate.
   2. Certificates may be recent or previous test results on material or product, but must be acceptable to Architect.

F. Manufacturer's Instructions: When specified in individual specification sections, submit printed instructions for delivery, storage, assembly, installation, start-up, adjusting, and finishing, for the Owner's information. Indicate special procedures, perimeter conditions requiring special attention, and special environmental criteria required for application or installation.

G. Manufacturer's Field Reports: Submit reports for Architect's benefit as contract administrator or for Owner.
   1. Submit report in duplicate within 30 days of observation to Architect for information.
   2. Submit for information for the limited purpose of assessing compliance with information given and the design concept expressed in the Contract Documents.

H. Erection Drawings: Submit drawings for Architect's benefit as contract administrator or for Owner.
   1. Submit for information for the limited purpose of assessing compliance with information given and the design concept expressed in the Contract Documents.
   2. Data indicating inappropriate or unacceptable Work may be subject to action by Architect or Owner.

1.5 QUALITY ASSURANCE

A. Testing Agency Qualifications:
   1. Prior to start of work, submit agency name, address, and telephone number, and names of full time registered Engineer and responsible officer.
   2. Submit copy of report of laboratory facilities inspection made by NIST Construction Materials Reference Laboratory during most recent inspection, with memorandum of remedies of any deficiencies reported by the inspection.
   3. Qualification Statement: Provide documentation showing testing laboratory is accredited under IAS AC89.

B. Designer Qualifications: Where professional engineering design services and design data submittals are specifically required of Contractor by Contract Documents, provide services of a Professional Engineer experienced in design of this type of work and licensed in Nevada.

1.6 REFERENCES AND STANDARDS

A. For products and workmanship specified by reference to a document or documents not included in the Project Manual, also referred to as reference standards, comply with requirements of the standard, except when more rigid requirements are specified or are required by applicable codes.

B. Comply with reference standard of date of issue current on date of Contract Documents, except where a specific date is established by applicable code.

C. Obtain copies of standards where required by product specification sections.

D. Maintain copy at project site during submittals, planning, and progress of the specific work, until Substantial Completion.

E. Should specified reference standards conflict with Contract Documents, request clarification from Architect before proceeding.

F. Neither the contractual relationships, duties, or responsibilities of the parties in Contract nor those of Architect shall be altered from Contract Documents by mention or inference otherwise in any reference document.

1.7 TESTING AND INSPECTION AGENCIES AND SERVICES

A. Owner will employ and pay for services of an independent certified testing agency acceptable to the Architect and Contractor to perform specified testing and inspection as required and specified in the Contract Documents.

B. Contractor shall employ and pay for services of an independent certified testing agency acceptable to the Architect and Owner to perform specified testing and inspections required to be performed and paid for by the Contractor.

C. As indicated in individual specification sections, Owner or Contractor shall employ and pay for services of an independent testing agency to perform other specified testing.

D. Employment of agency in no way relieves Contractor of obligation to perform Work in accordance with requirements of Contract Documents.

E. Contractor Employed Agency:
   1. Testing agency: Comply with requirements of ASTM E329, ASTM E543, ASTM E699, ASTM C1021, ASTM C1077, ASTM C1093, and ASTM D3740.
   2. Inspection agency: Comply with requirements of ASTM D3740 and ASTM E329.
   3. Laboratory Qualifications: Accredited by IAS according to IAS AC89.
   4. Laboratory: Authorized to operate in Nevada.
   5. Laboratory Staff: Maintain a full time registered Engineer on staff to review services.
   6. Testing Equipment: Calibrated at reasonable intervals either by NIST or using an NIST established Measurement Assurance Program, under a laboratory measurement quality assurance program.

PART 2 PRODUCTS - NOT USED

PART 3 EXECUTION

3.1 CONTROL OF INSTALLATION

A. Monitor quality control over suppliers, manufacturers, products, services, site conditions, and workmanship, to produce work of specified quality.

B. Comply with manufacturers' instructions, including each step in sequence.

C. Should manufacturers' instructions conflict with Contract Documents, request clarification from Architect before proceeding.

D. Comply with specified standards as minimum quality for the work except where more stringent tolerances, codes, or specified requirements indicate higher standards or more precise workmanship.

E. Have work performed by persons qualified to produce required and specified quality.

F. Verify that field measurements are as indicated on shop drawings or as instructed by the manufacturer.

G. Secure products in place with positive anchorage devices designed and sized to withstand stresses, vibration, physical distortion, and disfigurement.

3.2 MOCK-UPS

A. Before installing portions of the Work where mock-ups are required, construct mock-ups in location and size indicated for each form of construction and finish required to comply with the following requirements, using materials indicated for the completed Work. The purpose of mock-up is to demonstrate the proposed range of aesthetic effects and workmanship.

B. Accepted mock-ups establish the standard of quality the Architect will use to judge the Work.

C. Integrated Exterior Mock-ups: Construct integrated exterior mock-up as indicated on drawings. Coordinate installation of exterior envelope materials and products as required in individual Specification Sections. Provide adequate supporting structure for mock-up materials as necessary.

D. Provide supervisory personnel who will oversee mock-up construction. Provide workers that will be employed during the construction at Project.

E. Tests shall be performed under provisions identified in this section and identified in the respective product specification sections.

F. Assemble and erect specified items with specified attachment and anchorage devices, flashings, seals, and finishes.

G. Obtain Architect's approval of mock-ups before starting work, fabrication, or construction.
   1. Architect will issue written comments within seven (7) working days of initial review and each subsequent follow up review of each mock-up.
   2. Make corrections as necessary until Architect's approval is issued.

H. Architect will use accepted mock-ups as a comparison standard for the remaining Work.

I. Where mock-up has been accepted by Architect and is specified in product specification sections to be removed, protect mock-up throughout construction, remove mock-up and clear area when directed to do so by Architect.

J. Where possible salvage and recycle the demolished mock-up materials.

3.3 TOLERANCES

A. Monitor fabrication and installation tolerance control of products to produce acceptable Work. Do not permit tolerances to accumulate.

B. Comply with manufacturers' tolerances. Should manufacturers' tolerances conflict with Contract Documents, request clarification from Architect before proceeding.

C. Adjust products to appropriate dimensions; position before securing products in place.

3.4 TESTING AND INSPECTION

A. See individual specification sections for testing and inspection required. The following list is only intended to be a guide for the Contractor to aid in determining the testing requirements for the Project. The requirements specified in each specific section shall take precedence over this list and this list is not to be interpreted as being a complete list.
   1. 033000 - Cast-in-Place Concrete
   2. 042000 - Unit Masonry
   3. 051200 - Structural Steel Framing.
   4. 053100 - Steel Decking.
   5. 054000 - Cold-Formed Metal Framing.
   6. 072400 - Exterior Insulation and Finish Systems.
   7. 075419 - PVC Thermoplastic Single-Ply Roofing
   8. 078100 - Applied Fire Protection.
   9. 078400 - Firestopping
   10. 079200 - Joint Sealants
   11. 084313 - Aluminum-Framed Storefronts and Entrances
   12. 084413 - Glazed Aluminum Curtain Walls
   13. 088000 - Unit Masonry
   14. Division 9 - Flooring Sections regarding moisture content of concrete floors.

B. Testing Agency Duties:
   1. Test samples of mixes submitted by Contractor.
   2. Provide qualified personnel at site. Cooperate with Architect and Contractor in performance of services.
   3. Perform specified sampling and testing of products in accordance with specified standards.
   4. Ascertain compliance of materials and mixes with requirements of Contract Documents.
   5. Promptly notify Architect and Contractor of observed irregularities or non-compliance of Work or products.
   6. Perform additional tests and inspections required by Architect.
   7. Attend preconstruction meetings and progress meetings.
   8. Submit reports of all tests/inspections specified.

C. Limits on Testing/Inspection Agency Authority:
   1. Agency may not release, revoke, alter, or enlarge on requirements of Contract Documents.
   2. Agency may not approve or accept any portion of the Work.
   3. Agency may not assume any duties of Contractor.
   4. Agency has no authority to stop the Work.

D. Contractor Responsibilities:
   1. Deliver to agency at designated location, adequate samples of materials proposed to be used that require testing, along with proposed mix designs.
   2. Cooperate with laboratory personnel, and provide access to the Work and to manufacturers' facilities.
   3. Provide incidental labor and facilities:
      a. To provide access to Work to be tested/inspected.
      b. To obtain and handle samples at the site or at source of Products to be tested/inspected.

c. To facilitate tests/inspections.
d. To provide storage and curing of test samples.

4. Notify laboratory 24 hours minimum, in advance, prior to expected time for operations requiring testing/inspection services.
5. Employ services of an independent qualified testing laboratory and pay for additional samples, tests, and inspections required by Contractor beyond specified requirements.
6. Arrange with Owner's agency and pay for additional samples, tests, and inspections required by Contractor beyond specified requirements.

E. Re-testing required because of non-conformance to specified requirements shall be performed by the same agency.
1. Re-testing required because of non-compliance with specified requirements shall be paid for by Contractor.

3.5 MANUFACTURERS' FIELD SERVICES

A. When specified in individual specification sections, require material or product suppliers or manufacturers to provide qualified staff personnel to observe site conditions, conditions of surfaces and installation, quality of workmanship, start-up of equipment, test, adjust, and balance equipment as applicable, and to initiate instructions when necessary.

B. Such Manufacturer's personnel shall be accompanied by the Contractor during his time at the site.

C. Submit qualifications of observer to Architect 30 days in advance of required observations.
1. Observer subject to approval of Owner.

D. Report observations and site decisions or instructions given to applicators or installers that are supplemental or contrary to manufacturers' written instructions.

3.6 DEFECT ASSESSMENT

A. General: On completion of testing, inspecting, sample taking, and similar services, repair damaged construction and restore substrates and finishes.
1. Provide materials and comply with installation requirements specified in other Specification Sections. Restore patched areas and extend restoration into adjoining areas with durable seams that are as invisible as possible.
2. Comply with the Contract Document requirements for Section 01-7329 - Cutting and Patching.

B. Protect construction exposed by or for quality-control service activities.

C. Repair and protection are Contractor's responsibility, regardless of the assignment of responsibility for quality-control services.

D. Replace Work or portions of the Work not complying with specified requirements.

E. If, in the opinion of Architect, it is not practical to remove and replace the work, Architect will direct an appropriate remedy or adjust payment.

END OF SECTION

SECTION 014100 - REGULATORY REQUIREMENTS

PART 1 GENERAL

1.1 SUMMARY OF REFERENCE STANDARDS

A. Section includes: Regulatory requirements applicable to this project.

B. Specific reference in the Specifications to codes and regulations or requirements of regulatory agencies shall mean the latest printed edition of each adopted by the regulatory agency in effect at the time of the opening of Bids, except as may be otherwise specifically stated in the Contract Documents.

C. Should any conditions develop not covered by the Contract Documents wherein the finished Work will not comply with current codes, a Change Order detailing and specifying the required Work shall be submitted to and approved by City before proceeding with the Work.

1.2 STANDARDS AND CODES

A. 36 CFR 1191 - Americans with Disabilities Act (ADA) Accessibility Guidelines for Buildings and Facilities; Architectural Barriers Act (ABA) Accessibility Guidelines; current edition.

B. ADA Standards - Americans with Disabilities Act (ADA) Standards for Accessible Design; 2010.

C. 29 CFR 1910 - Occupational Safety and Health Standards; current edition.

D. ICC A117.1 - Accessible and Usable Buildings and Facilities; 2017.

E. ICC (IFC) - International Fire Code; Most Recent Edition Adopted by Authority Having Jurisdiction, Including All Applicable Amendments and Supplements.

F. NFPA 1 - Fire Code; 2021, with Amendment (2020).

G. NFPA 101 - Life Safety Code; Most Recent Edition Adopted by Authority Having Jurisdiction, Including All Applicable Amendments and Supplements.

H. ICC (IBC) - International Building Code; Most Recent Edition Adopted by Authority Having Jurisdiction, Including All Applicable Amendments and Supplements.

I. Building Administrative Code of Clark County; 2020.

J. CCFC - Clark County Fire Code; 2020.

K. ICC (IPC) - International Plumbing Code; Most Recent Edition Adopted by Authority Having Jurisdiction, Including All Applicable Amendments and Supplements.

L. ICC (IMC) - International Mechanical Code; Most Recent Edition Adopted by Authority Having Jurisdiction, Including All Applicable Amendments and Supplements.

M. ICC (IFGC) - International Fuel Gas Code; Most Recent Edition Adopted by Authority Having Jurisdiction, Including All Applicable Amendments and Supplements.

N. NFPA 70 - National Electrical Code; Most Recent Edition Adopted by Authority Having Jurisdiction, Including All Applicable Amendments and Supplements.

O. Elevator Code: ASME 17.1 Elevators and Escalators.

P. ICC (IECC) - International Energy Conservation Code; Most Recent Edition Adopted by Authority Having Jurisdiction, Including All Applicable Amendments and Supplements.

Q. The 2019 Triennial Edition of Title 24 California Building Standards Code (Cal. Code Regs., Title 24) was published July 1, 2019, with an effective date of January 1, 2020.
   1. PART 1–CALIFORNIA ADMINISTRATIVE CODE:
      a. Errata—Part 1 (non-substantive corrections) Effective January 1, 2020; Supplement—Part 1 Effective July 1, 2021.
   2. PART 2–CALIFORNIA BUILDING CODE:
      a. Current Printing—Part 2 Volume 1 & 2—Including Updates (HTML); First Printing—Part 2, Volume 1 (PDF), Errata - Part 2, Volume 1 (non-substantive corrections) Effective January 1, 2020, Errata—Part 2, Volume 1 (non-substantive corrections) Effective October 1, 2020, Supplement—Part 2 Volume 1 Effective July 1, 2021, First Printing—Part 2, Volume 2 (PDF), Errata—Part 2, Volume 2 (non-substantive corrections) Effective January 1, 2020, Errata—Part. 2, Volume 2 (non-substantive corrections) Effective October 1, 2020,Supplement—Part 2 Volume 2 Effective July 1, 2021.
   3. PART 3–CALIFORNIA ELECTRICAL CODE:
      a. Current Printing—Part 3—including Updates, First Printing—Part 3, Errata—Part 3 (non-substantive corrections) Effective January 1, 2020, Supplement—Part 3 Effective July 1, 2021.
   4. PART 4–CALIFORNIA MECHANICAL CODE:
      a. Errata—Part 4 (non-substantive corrections) Effective January 1, 2020, Supplement—Part 4 Effective July 1, 2021.
   5. PART 5–CALIFORNIA PLUMBING CODE:
      a. CWoRE—Part 5 Supplement effective August 17, 2019, Errata—Part 5 (non-substantive corrections) Effective January 1, 2020, Errata—Part 5 (non-substantive corrections) Effective September 1, 2020, Supplement—Part 5 Effective July 1, 2021.
   6. PART 6–CALIFORNIA ENERGY CODE:
      a. Errata—Part 6 (Non-substantive corrections) Effective January 1, 2020,
   7. PART 8–CALIFORNIA HISTORICAL BUILDING CODE:
   8. PART 9–CALIFORNIA FIRE CODE:
      a. Current Printing—Part 9—including Updates (HTML), First Printing—Part 9 (PDF), Errata—Part 9 (Non-substantive corrections) Effective January 1, 2020, Errata—Part 9 (Non-substantive corrections) Effective October 1, 2020, Supplement—Part 9 Effective July 1, 2021.
   9. PART 10–CALIFORNIA EXISTING BUILDING CODE:
      a. Current Printing—Part 10—including Updates (HTML), First Printing—Part 10 (PDF), Errata—Part 10 (non-substantive corrections) Effective January 1, 2020, Supplement—Part 10 Effective July 1, 2021.
   10. PART 11–CALIFORNIA GREEN BUILDING STANDARDS CODE also referred as CALGreen
      a. Errata—Part 11(non-substantive corrections) Effective January 1, 2020, CWoRE—Part 11 Supplement Effective August 17, 2019, Supplement—Part 11 Effective July 1, 2021.
   11. PART 12–CALIFORNIA REFERENCED STANDARDS CODE

1.3 RELATED REQUIREMENTS

A. Section 014000 - Quality Requirements.

1.4 QUALITY ASSURANCE

A. Contractor shall comply with all codes, laws, ordinances, rules and regulations applicable to the Work, which shall have full force and effect as though printed in full in these Specifications. Code, laws, ordinances, rules and regulations are not furnished to Contractor, because Contractor is assumed to be familiar with these requirements.

1.5 PRECEDENCE

A. Where Drawings or Specifications require or describe products or execution of better quality, higher standard or greater size than required by applicable codes, ordinances and standards, Drawings and Specifications shall take precedence so long as such increase is legal.

B. Where no requirements are identified on Drawings or in Specifications, comply with all requirements of applicable codes, ordinances and standards of governing authorities having jurisdiction.

C. Conflicts between referenced regulatory requirements: Comply with the one establishing the more stringent requirement.

D. Conflicts between referenced regulatory requirements and Contract Documents: Comply with the one establishing the more stringent requirement.

1.6 COMPLIANCE WITH AMERICANS WITH DISABILITIES ACT

A. Contractor acknowledges that, pursuant to the Americans with Disabilities Act (ADA), programs, services, and other activities provided by a public entity to the public, whether directly or through a contractor, must be accessible to the disabled public. Contractor shall provide the services specified in the Contract Documents in a manner that complies with the ADA and any and all other applicable federal, state, and local disability rights legislation. Contractor agrees not to discriminate against disabled persons in the provision of services, benefits, or activities provided under this Agreement and further agrees that any violation of this prohibition on the part of Contractor, its employees, agents, or assigns shall constitute a material breach of the Contract Documents.

PART 2 PRODUCTS - NOT USED

PART 3 EXECUTION - NOT USED

END OF SECTION

SECTION 015000 - TEMPORARY FACILITIES AND CONTROLS

PART 1 GENERAL

1.1 SECTION INCLUDES

A. Dewatering

B. Temporary utilities.

C. Temporary telecommunications services.

D. Temporary sanitary facilities.

E. Temporary Fire Protection.

F. Temporary Barriers, Fencing and Enclosures:

G. Protection of Installed Work:

H. Security requirements.

I. Vehicular access and parking.

J. Cleaning and Waste removal facilities and services.

K. Project identification sign.

L. Field offices.

1.2 RELATED REQUIREMENTS

A. Section 015100 - Temporary Utilities.

B. Section 015813 - Temporary Project Signage.

1.3 REFERENCE STANDARDS

A. ASTM E84 - Standard Test Method for Surface Burning Characteristics of Building Materials; 2021a.

B. ASTM E90 - Standard Test Method for Laboratory Measurement of Airborne Sound Transmission Loss of Building Partitions and Elements; 2009 (Reapproved 2016).

1.4 DEWATERING

A. Provide temporary means and methods for dewatering all temporary facilities and controls.

B. Maintain temporary facilities in operable condition.

1.5 GENERAL

A. Comply with codes and regulations regarding potable drinking water, sanitation, dust control, fire protection, and other temporary controls.

B. Interruptions of the utility service to the existing property is not permitted. However, in the event such interruption is needed, obtain written approval from the Owner's Representative a minimum of 72 hours prior to disconnection or shutting off any service or utility. Contractor shall notify Owner of any planned interruption of utilities and services in writing.

C. Remove all temporary facilities and construction from the site as soon as practical and possible and in the opinion of the Owner's Representative the progress of the work deems it practical.

D. Restore and refurbish the areas of the site occupied by the temporary facilities to a form acceptable to the Architect and the Owner's Representative.

1.6 TEMPORARY UTILITIES - SEE SECTION 015100

1.7 TELECOMMUNICATIONS SERVICES

A. Provide, maintain, and pay for telecommunications services to field office at time of project mobilization.

B. Telecommunications services shall include:
   1. Facsimile Service: Minimum of one dedicated fax machine/printer, with dedicated phone line.
   2. WIFI connection: High speed/ broad band internet service shall be provided.

1.8 TEMPORARY SANITARY FACILITIES

A. Provide and maintain required facilities and enclosures. Provide at time of project mobilization.

B. Maintain daily in clean and sanitary condition.

C. At end of construction, return facilities to same or better condition as originally found.

1.9 TEMPORARY FIRE PROTECTION

A. Provide the required quantity of fire extinguishers, UL labeled ABC all-purpose for protection of the Work.

B. Provide temporary field office, storage and sheds with required fire extinguishers.

C. Comply with fire insurance and governing agencies.

1.10 BARRIERS

A. Provide barriers to prevent unauthorized entry to construction areas, to prevent access to areas that could be hazardous to workers or the public, to allow for owner's use of site and to protect existing facilities and adjacent properties from damage from construction operations and demolition.

B. Provide barricades and covered walkways required by governing authorities for public rights-of-way and a temporary exit and for public access to existing building.

C. Provide protection for plants designated to remain. Replace damaged plants.

D. Protect non-owned vehicular traffic, stored materials, site, and structures from damage.

1.11 FENCING

A. Construction: Commercial grade chain link fence.

B. Provide 6 foot high fence around construction site; equip with vehicular and pedestrian gates with locks.

C. Gates in the fencing are to be located to provide access to work areas. Provide locks for each gate.

D. Close and lock access to work after working hours.

1.12 EXTERIOR ENCLOSURES

A. Provide temporary insulated weather tight closure of exterior openings to accommodate acceptable working conditions and protection for Products, to allow for temporary heating and maintenance of required ambient temperatures identified in individual specification sections, and to prevent entry of unauthorized persons. Provide access doors with self-closing hardware and locks.

1.13 PROTECTION OF INSTALLED WORK

A. Protect all installed work.

B. Provide temporary and removable barriers for installed work.

C. Provide special protection as required by specification sections and in accordance with manufacturer's written instructions.

D. Provide protective covering at all openings.

E. Provide protection of finished floors and other surfaces subject to traffic and movement of heavy objects with plywood sheeting and waterproof cover.

F. Prohibit traffic or storage on any waterproofed or roofed surface. If traffic or storage is required for any reason, provide for protection of the surface in accordance with the manufacturer's written instructions.

G. Prohibit traffic or storage in any new or existing landscaped area.

1.14 SECURITY

A. Provide security and facilities to protect Work, existing facilities, and Owner's operations from unauthorized entry, vandalism, or theft.

B. Coordinate with Owner's security program.

1.15 VEHICULAR ACCESS AND PARKING

A. Comply with regulations relating to use of streets and sidewalks, access to emergency facilities, and access for emergency vehicles.

B. Coordinate access and haul routes with governing authorities and Owner.

C. Provide and maintain access to fire hydrants, free of obstructions.

D. Restrict site access and parking to areas designated by the Owner.

E. Provide means of removing mud from vehicle wheels before entering streets.

F. Owner designated on-site roads may be used for construction traffic.

G. Provide temporary parking areas to accommodate construction personnel. When site space is not adequate, provide additional off-site parking.

H. Existing parking areas may be used for construction parking.

I. Provide one parking space for Owner use.

J. Provide one parking space for Architect use.

1.16 CLEANING AND WASTE REMOVAL

A. Provide waste removal facilities and services as required to maintain the site in clean and orderly condition. Do not allow to accumulate.

B. Provide containers with lids. Remove trash from site daily.

C. Remove all debris from enclosed spaces such as plenums, chases, pipe chases, and all other enclosed spaces prior to enclosing the space.

D. At a minimum, broom clean and vacuum interior areas prior to the start of installing surface finishes. Thereafter, continue cleaning to eliminate dust and any other deleterious matter.

E. If materials to be recycled or re-used on the project must be stored on-site, provide suitable non-combustible containers; locate containers holding flammable material outside the structure unless otherwise approved by the authorities having jurisdiction.

F. Open free-fall chutes are not permitted. Terminate closed chutes into appropriate containers with lids.

1.17 PROJECT SIGNS - SEE SECTION 015813

1.18 FIELD OFFICES

A. Office: Weathertight, with lighting, electrical outlets, heating, cooling equipment, and equipped with sturdy furniture, drawing rack, and drawing display table.

B. Provide space for Project meetings, with table and chairs to accommodate 24 persons.

C. Locate offices and sheds in locations as approved by the Owner.

1.19 REMOVAL OF UTILITIES, FACILITIES, AND CONTROLS

A. Remove temporary utilities, equipment, facilities, materials, prior to Date of Substantial Completion inspection.

B. Clean and repair damage caused by installation or use of temporary work.

C. Restore existing facilities used during construction to original condition.

D. Restore new permanent facilities used during construction to specified condition.

PART 2 PRODUCTS - NOT USED

PART 3 EXECUTION - NOT USED

END OF SECTION

SECTION 016000 - PRODUCT REQUIREMENTS

PART 1 GENERAL

1.1 RELATED DOCUMENTS

A. Drawings and general provisions of the Contract, including General Conditions and Division 01 - General Requirements Specification Sections apply to this section.

1.2 SECTION INCLUDES

A. General product requirements.

B. Re-use of existing products.

C. Transportation, handling, storage and protection.

D. Product option requirements.

E. Procedures for Owner-supplied products.

F. Maintenance materials, including extra materials, spare parts, tools, and software.

1.3 RELATED REQUIREMENTS

A. Section 011000 - Summary:

B. Section 012500 - Substitution Procedures: Substitutions made during procurement and/or construction phases.

C. Section 017300 - Execution Requirements.

D. Section 014000 - Quality Requirements.

E. Section 014216 - Definitions.

1.4 REFERENCE STANDARDS

A. 16 CFR 260.13 - Guides for the Use of Environmental Marketing Claims; Federal Trade Commission; Recycled Content; Current Edition.

B. GreenSeal GS-36 - Commercial Adhesives; Green Seal, Inc.

C. NEMA MG 1 - Motors and Generators; 2018.

D. NFPA 70 - National Electrical Code; Most Recent Edition Adopted by Authority Having Jurisdiction, Including All Applicable Amendments and Supplements.

1.5 DEFINITIONS

A. Products: Items obtained for incorporating into the Work, whether purchased for Project or taken from previously purchased stock. The term "product" includes the terms "material," "equipment," "system," and terms of similar intent.
   1. Named Products: Items identified by manufacturer's product name, including make or model number or other designation shown or listed in manufacturer's published product literature, that is current as of date of the Contract Documents.

2. New Products: Items that have not previously been incorporated into another project or facility. Products salvaged or recycled from other projects are not considered new products.
3. Comparable Product: Product that is demonstrated and approved through submittal process to have the indicated qualities related to type, function, dimension, in-service performance, physical properties, appearance, and other characteristics that equal or exceed those of specified product.

B. Basis-of-Design Product Specification: A specification in which a specific manufacturer's product is named and accompanied by the words "basis-of-design product," including make or model number or other designation, to establish the significant qualities related to type, function,dimension, in-service performance, physical properties, appearance, and other characteristics for purposes of evaluating comparable products of additional manufacturers named in the specification.

1.6 SUBMITTALS

A. Refer to Section 013300 - Submittal Requirements, for additional submittal requirements.

B. Proposed Products List: Submit list of major products proposed for use, with name of manufacturer, trade name, and model number of each product.
1. Submit within 15 days after date of Agreement.
2. For products specified only by reference standards, list applicable reference standards.

C. Product Data Submittals: Submit manufacturer's standard published data. Mark each copy to identify applicable products, models, options, and other data. Supplement manufacturers' standard data to provide information specific to this Project.

D. Shop Drawing Submittals: Prepared specifically for this Project; indicate utility and electrical characteristics, utility connection requirements, and location of utility outlets for service for functional equipment and appliances.

E. Sample Submittals: Illustrate functional and aesthetic characteristics of the product, with integral parts and attachment devices. Coordinate sample submittals for interfacing work.
1. For selection from standard finishes, submit samples of the full range of the manufacturer's standard colors, textures, and patterns.

F. Indicate utility and electrical characteristics, utility connection requirements, and location of utility outlets for service for functional equipment and appliances.

1.7 QUALITY ASSURANCE

A. Compatibility of Options: If Contractor is given option of selecting between two or more products for use on Project, select product compatible with products previously selected, even if previously selected products were also options.
1. Each contractor is responsible for providing products and construction methods compatible with products and construction methods of other contractors.
2. If a dispute arises between contractors over concurrently selectable but incompatible products, Architect will determine which products shall be used.

B. Reused Products: Materials and equipment previously used in this or other construction, salvaged and refurbished as specified.
1. Wood fabricated from timber abandoned in transit after harvesting is considered reused, not recycled.

2. Acceptable Evidence: Information about the origin or source, from Contractor or supplier.

1.8 PRODUCT DELIVERY, STORAGE, AND HANDLING

A. Deliver, store, and handle products using means and methods that will prevent damage, deterioration, and loss, including theft and vandalism. Comply with manufacturer's written instructions.

B. Delivery and Handling:
   1. Schedule delivery to minimize long-term storage at Project site and to prevent overcrowding of construction spaces.
   2. Coordinate delivery with installation time to ensure minimum holding time for items that are flammable, hazardous, easily damaged, or sensitive to deterioration, theft, and other losses.
   3. Deliver products to Project site in an undamaged condition in manufacturer's original sealed container or other packaging system, complete with labels and instructions for handling, storing, unpacking, protecting, and installing.
   4. Inspect products on delivery to determine compliance with the Contract Documents and to determine that products are undamaged and properly protected.

C. Storage:
   1. Store products to allow for inspection and measurement of quantity or counting of units.
   2. Store materials in a manner that will not endanger Project structure.
   3. Store products that are subject to damage by the elements, under cover in a weathertight enclosure above ground, with ventilation adequate to prevent condensation.
   4. Protect foam plastic from exposure to sunlight, except to extent necessary for period of installation and concealment.
   5. Comply with product manufacturer's written instructions for temperature, humidity, ventilation, and weather-protection requirements for storage.
   6. Protect stored products from damage and liquids from freezing
   7. Provide a secure location and enclosure at Project site for storage of materials and equipment by Owner's construction forces. Coordinate location with Owner.

1.9 PRODUCT WARRANTIES

A. Submittal Time: Comply with requirements in Section 017800 - Closeout Procedures and Submittals.

B. Warranties specified in other Sections shall be in addition to, and run concurrent with, other warranties required by the Contract Documents. Manufacturer's disclaimers and limitations on product warranties do not relieve Contractor of obligations under requirements of the Contract Documents. Refer to Section 017836 - Warranties and Bonds.
   1. Manufacturer's Warranty: Written warranty furnished by individual manufacturer for a
   2. particular product and specifically endorsed by manufacturer to Owner.
   3. Special Warranty: Written warranty required by the Contract Documents to provide
   4. specific rights for Owner.

C. Special Warranties: Prepare a written document that contains appropriate terms and identification, ready for execution.
   1. Manufacturer's Standard Form: Modified to include Project-specific information and properly executed.

2. Specified Form: When specified forms are included with the Specifications, prepare a written document using indicated form properly executed.
3. See other Sections for specific content requirements and particular requirements for submitting special warranties.

PART 2 PRODUCTS

2.1 EXISTING PRODUCTS

A. Do not use materials and equipment removed from existing premises unless specifically required or permitted by Contract Documents.

B. Unforeseen historic items encountered remain the property of the Owner; notify Owner promptly upon discovery; protect, remove, handle, and store as directed by Owner.

C. Existing materials and equipment indicated to be removed, but not to be re-used, relocated, reinstalled, delivered to the Owner, or otherwise indicated as to remain the property of the Owner, become the property of the Contractor; remove from site.

D. Reused Products: Reused products include materials and equipment previously used in this or other construction, salvaged and refurbished as specified.

E. Specific Products to be Reused: The reuse of certain materials and equipment already existing on the project site is required.
   1. See drawings for list of items required to be salvaged for reuse and relocation.
   2. If reuse of other existing materials or equipment is desired, submit substitution request.

2.2 NEW PRODUCTS

A. Provide new products unless specifically required or permitted by Contract Documents.

B. Use of products having any of the following characteristics is not permitted:
   1. Made using or containing CFC's or HCFC's.
   2. Made of wood from newly cut old growth timber.
   3. Containing lead, cadmium, or asbestos.

C. Where other criteria are met, Contractor shall give preference to products that:
   1. If used on interior, have lower emissions, as defined in Section 016116.
   2. If wet-applied, have lower VOC content, as defined in Section 016116.
   3. Are extracted, harvested, and/or manufactured closer to the location of the project.
   4. Have longer documented life span under normal use.
   5. Result in less construction waste. See Section 017419
   6. Are made of vegetable materials that are rapidly renewable.
   7. Are made of recycled materials.
   8. If made of wood, are made of sustainably harvested wood, wood chips, or wood fiber.
   9. If bio-based, other than wood, are or are made of Sustainable Agriculture Network certified products.

D. Provide interchangeable components by the same manufacture for components being replaced.

E. Motors: Refer to Electrical Drawings, NEMA MG 1 Type. Specific motor type is specified in individual specification sections.

F. Wiring Terminations: Provide terminal lugs to match branch circuit conductor quantities, sizes, and materials indicated. Size terminal lugs to NFPA 70, include lugs for terminal box.

G. Cord and Plug: Provide minimum 6 foot cord and plug including grounding connector for connection to electric wiring system. Cord of longer length is specified in individual specification sections.

2.3 PRODUCT OPTIONS

A. General Product Requirements: Provide products that comply with the Contract Documents, are undamaged and, unless otherwise indicated, are new at time of installation.
   1. Provide products complete with accessories, trim, finish, fasteners, and other items needed for a complete installation and indicated use and effect.
   2. Standard Products: If available, and unless custom products or nonstandard options are specified, provide standard products of types that have been produced and used successfully in similar situations on other projects.
   3. Owner reserves the right to limit selection to products with warranties not in conflict with requirements of the Contract Documents.
   4. Where products are accompanied by the term "as selected," Architect will make selection.
   5. Descriptive, performance, and reference standard requirements in the Specifications establish salient characteristics of products.
   6. Or Equal: For products specified by name and accompanied by the term "or equal," or "or approved equal," or "or approved," comply with requirements in "Comparable Products" Article to obtain approval for use of an unnamed product.

B. Products specified by stating that the Contract Documents are based on a Product by a single manufacturer followed by the statement "Equivalent products by the following manufacturers are acceptable":
   1. Select the specified Product or a Product by a named manufacturer having equivalent or superior characteristics to the specified Product and meeting the requirements of the Contract Documents.
   2. If the specified Product is not selected, submit Product Data to substantiate compliance of proposed Product with specified requirements.
   3. The specified Product establishes the required standard of quality.

C. Visual Matching Specification: Where Specifications require "match Architect's sample", provide a product that complies with requirements and matches Architect's sample. Architect's decision will be final on whether a proposed product matches.
   1. If no product available within specified category matches and complies with other specified requirements, comply with requirements in Article 3.01 of this Specification.

D. Visual Selection Specification: Where Specifications include the phrase "as selected by Architect from manufacturer's full range" or similar phrase, select a product that complies with requirements. Architect will select color, gloss, pattern, density, or texture from manufacturer's product line that includes both standard and premium items.

E. Products specified by naming one Product followed by the statement "Substitutions: Not permitted": Substitutions will not be allowed.

F. Products Specified by Reference Standards or by Description Only: Use any product meeting those standards or description.
   1. Select any Product meeting the specified standard.
   2. Submit Product Data to substantiate compliance of proposed Product with specified requirements.

G. Products Specified by Naming One or More Manufacturers: Use a product of one of the manufacturers named and meeting specifications, no options or substitutions allowed.

H. Products Specified by Naming One or More Manufacturers with a Provision for Substitutions: Submit a request for substitution for any manufacturer not named.

I. Products specified by required performance or attributes, without naming a manufacturer or Product:
   1. Select any Product meeting specified requirements.
   2. Submit Product Data to substantiate compliance of proposed Product with specified requirements.

2.4 SPARE PARTS AND MAINTENANCE MATERIALS

A. Furnish extra materials, spare parts, tools, and software of types and in quantities specified in individual specification sections.

B. Deliver to Project site and by the Contractor; obtain receipt prior to final payment.

PART 3 EXECUTION

3.1 SUBSTITUTION PROCEDURES - REFER TO SECTION 012500 - SUBSTITUTION PROCEDURES.

3.2 OWNER-FURNISHED PRODUCTS

A. Refer to Section 014216 - Definitions for specific requirements for:
   1. OWNER FURNISHED - OWNER INSTALLED (OFOI) products.
   2. OWNER FURNISHED - CONTRACTOR INSTALLED (OFCI) products.

B. Owner's Responsibilities:
   1. Arrange for and deliver Owner reviewed shop drawings, product data, and samples, to Contractor.
   2. Arrange and pay for product delivery to site.
   3. On delivery, inspect products jointly with Contractor.
   4. Submit claims for transportation damage and replace damaged, defective, or deficient items.
   5. Arrange for manufacturers' warranties, inspections, and service.

C. Contractor's Responsibilities:
   1. Contractor shall provide a written schedule to the Owner indicating when the Owner Furnished items must be received at the project site to insure the Project completion in accordance with the established schedule. Such dates shall be shown on the schedule.
   2. Review Owner reviewed shop drawings, product data, and samples.
   3. Receive and unload products at site; inspect for completeness or damage jointly with Owner.

4. Handle, store, install and finish products.
5. Repair or replace items damaged after receipt.

3.3 TRANSPORTATION AND HANDLING

A. Package products for shipment in manner to prevent damage; for equipment, package to avoid loss of factory calibration.

B. If special precautions are required, attach instructions prominently and legibly on outside of packaging.

C. Coordinate schedule of product delivery to designated prepared areas in order to minimize site storage time and potential damage to stored materials.

D. Transport and handle products in accordance with manufacturer's instructions.

E. Transport materials in covered trucks to prevent contamination of product and littering of surrounding areas.

F. Promptly inspect shipments to ensure that products comply with requirements, quantities are correct, and products are undamaged.

G. Provide equipment and personnel to handle products by methods to prevent soiling, disfigurement, or damage, and to minimize handling.

H. Arrange for the return of packing materials, such as wood pallets, where economically feasible.

3.4 STORAGE AND PROTECTION

A. Designate receiving/storage areas for incoming products so that they are delivered according to installation schedule and placed convenient to work area in order to minimize waste due to excessive materials handling and misapplication. See Section 017419.

B. Store and protect products in accordance with manufacturers' instructions.

C. Store with seals and labels visable, intact and legible.

D. Store sensitive products in weathertight, climate-controlled enclosures in an environment favorable to product.

E. For exterior storage of fabricated products, place on sloped supports above ground.

F. Provide off-site storage and protection when site does not permit on-site storage or protection.

G. Protect products from damage or deterioration due to construction operations, weather, precipitation, humidity, temperature, sunlight and ultraviolet light, dirt, dust, and other contaminants.

H. Comply with manufacturer's warranty conditions, if any.

I. Cover products subject to deterioration with impervious sheet covering. Provide ventilation to prevent condensation and degradation of products.

J. Store loose granular materials on solid flat surfaces in a well-drained area. Prevent mixing with foreign matter.

K. Prevent contact with material that may cause corrosion, discoloration, or staining.

L. Provide equipment and personnel to store products by methods to prevent soiling, disfigurement, or damage.

M. Arrange storage of products to permit access for inspection. Periodically inspect to verify products are undamaged and are maintained in acceptable condition.

END OF SECTION

SECTION 017300 - EXECUTION REQUIREMENTS

PART 1 -GENERAL

1.1 SUMMARY

A. Section includes: General procedural requirements governing execution of the Work including, but not limited to, the following:
   1. Construction layout.
   2. Field engineering and surveying.
   3. General installation of products.
   4. Progress cleaning.
   5. Starting and adjusting.
   6. Protection of installed construction.
   7. Correction of the Work.
   8. Adjustment of the Work
   9. Final Cleaning
   10. General requirements for maintenance service.

1.2 REFERENCE STANDARDS

A. NFPA 241 - Standard for Safeguarding Construction, Alteration, and Demolition Operations; 2013.

1.3 SUBMITTALS

A. See Section 013300 - Submittal Requirements, for submittal procedures.

B. Certificates: Submit certificate signed by land surveyor or professional engineer certifying that location and elevation of improvements comply with requirements.

C. Landfill Receipts: Submit copy of receipts issued by a landfill facility, licensed to accept hazardous materials, for hazardous waste disposal.

D. Project Record Documents: Accurately record actual locations of capped and active utilities.

1.4 QUALIFICATIONS

A. For field engineering, employ a professional engineer of the discipline required for specific service on Project, licensed in Nevada.

1.5 PROJECT CONDITIONS

A. Ventilate enclosed areas to assist cure of materials, to dissipate humidity, and to prevent accumulation of dust, fumes, vapors, or gases.

B. Dust Control: Execute work by methods to minimize raising dust from construction operations. Provide positive means to prevent air-borne dust from dispersing into atmosphere and over adjacent property.
   1. Provide dust-proof enclosures to prevent entry of dust generated outdoors.
   2. Provide dust-proof barriers between construction areas and areas continuing to be occupied by Owner.

C. Noise Control: Provide methods, means, and facilities to minimize noise produced by construction operations.

1. At All Times: Excessively noisy tools and operations will not be tolerated inside the building at any time of day; excessively noisy includes jackhammers.
2. Outdoors: Limit conduct of noisy exterior work to hours approved by the Owner's Representative.
3. Indoors: Limit conduct of noisy interior work to hours approved by the Owner's Representative.

1.6 COORDINATION

A. Verify all dimensions and conditions at the site.

B. Coordinate the Work of this section with all trades.

C. Coordinate scheduling, submittals, and work of the various sections of the Project Manual to ensure efficient and orderly sequence of installation of interdependent construction elements, with provisions for accommodating items installed later.

D. Notify affected utility companies and comply with their requirements.

E. Verify that utility requirements and characteristics of new operating equipment are compatible with building utilities. Coordinate work of various sections having interdependent responsibilities for installing, connecting to, and placing in service, such equipment.

F. Coordinate space requirements, supports, and installation of mechanical and electrical work that are indicated diagrammatically on Drawings. Follow routing shown for pipes, ducts, and conduit, as closely as practicable; place runs parallel with lines of building. Utilize spaces efficiently to maximize accessibility for other installations, for maintenance, and for repairs.

G. In finished areas except as otherwise indicated, conceal pipes, ducts, and wiring within the construction. Coordinate locations of fixtures and outlets with finish elements.

H. Coordinate completion and clean-up of work of separate sections.

I. After Owner occupancy of premises, coordinate access to site for correction of defective work and work not in accordance with Contract Documents, to minimize disruption of Owner's activities.

J. All work, including materials and workmanship, shall conform to the requirements of applicable local codes, laws, ordinances, the adopted building codes, ANSI A117.1 - Guidelines for Accessible & Useable Buildings and Facilities, and ADAAG- ADA Accessibility Guidelines for Buildings & Facilities.

PART 2 PRODUCTS

2.1 MATERIALS

A. Cleaning Agents: Use cleaning materials and agents recommended by manufacturer or fabricator of the surface to be cleaned. Do not use cleaning agents that are potentially hazardous to health or property or that might damage finished surfaces.
   1. Use cleaning products that comply with Green Seal's GS-37, or if GS-37 is not applicable, use products that comply with the maximum allowable VOC levels.

PART 3 EXECUTION

3.1 EXAMINATION

A. Existing Conditions: The existence and location of site improvements, utilities, and other construction indicated as existing are not guaranteed. Before beginning work, investigate and verify the existence and location of mechanical and electrical systems and other construction affecting the Work.

B. Before construction, verify the location and points of connection of utility services.

C. Existing Utilities: The existence and location of underground and other utilities and construction indicated as existing are not guaranteed. Before beginning sitework, investigate and verify the existence and location of underground utilities and other construction affecting the Work.
   1. Furnish location data for work related to Project that must be performed by public utilities serving Project site.

D. Acceptance of Conditions:
   1. Examine substrates, areas, and conditions, with Installer or Applicator present where indicated, for compliance with requirements for installation tolerances and other conditions affecting performance. Record observations. Start of work means acceptance of existing conditions.
   2. Prior to Cutting: Examine existing conditions prior to commencing work, including elements subject to damage or movement during cutting and patching. After uncovering existing work, assess conditions affecting performance of work. Beginning of cutting or patching means acceptance of existing conditions.

E. Verify compatibility with and suitability of substrates, including compatibility with existing finishes or primers.

F. Verify that existing substrate is capable of structural support or attachment of new work being applied or attached.

G. Examine and verify specific conditions described in individual specification sections.

H. Take field measurements before confirming product orders or beginning fabrication, to minimize waste due to over-ordering or mis-fabrication.

I. Examine roughing-in for mechanical and electrical systems to verify actual locations of connections before equipment and fixture installation.

J. Proceed with installation only after unsatisfactory conditions have been corrected. Proceeding with the Work indicates acceptance of surfaces and conditions.

K. Notify Owner and Architect of discrepancies prior to commencement of Work.

3.2 PREINSTALLATION CONFERENCES - REFER TO SECTION 01 30 00 - ADMINISTRATIVE REQUIREMENTS.

3.3 PREPARATION

A. Existing Utility Information: Furnish information to local utility and Owner that is necessary to adjust, move, or relocate existing utility structures, utility poles, lines, services, or other utility appurtenances located in or affected by construction. Coordinate with authorities having jurisdiction.

B. Field Measurements: Take field measurements as required to fit the Work properly. Recheck measurements before installing each product. Where portions of the Work are indicated to fit to other construction, verify dimensions of other construction by field measurements before fabrication. Coordinate fabrication schedule with construction progress to avoid delaying the Work.

C. Space Requirements: Verify space requirements and dimensions of items shown diagrammatically on Drawings.

D. Review of Contract Documents and Field Conditions: Immediately on discovery of the need for clarification of the Contract Documents, submit a request for information to Architect. Include a detailed description of problem encountered, together with recommendations for changing the Contract Documents.

3.4 CONSTRUCTION LAYOUT

A. Verification: Before proceeding to lay out the Work, verify layout information shown on Drawings, in relation to the property survey and existing benchmarks. If discrepancies are discovered, notify Architect promptly.

B. General: Engage a land surveyor or professional engineer to lay out the Work using accepted surveying practices.
   1. Establish benchmarks and control points to set lines and levels at each story of construction and elsewhere as needed to locate each element of Project.
   2. Establish dimensions within tolerances indicated. Do not scale Drawings to obtain required dimensions.
   3. Inform installers of lines and levels to which they must comply.
   4. Check the location, level and plumb, of every major element as the Work progresses.
   5. Notify Architect when deviations from required lines and levels exceed allowable tolerances.
   6. Close site surveys with an error of closure equal to or less than the standard established by authorities having jurisdiction.
   7. Site Improvements: Locate and lay out site improvements, including pavements, grading, fill and topsoil placement, utility slopes, and invert elevations.
   8. Building Lines and Levels: Locate and lay out control lines and levels for structures, building foundations, column grids, and floor levels, including those required for mechanical and electrical work. Transfer survey markings and elevations for use with control lines and levels. Level foundations and piers from two or more locations.
   9. Record Log: Maintain a log of layout control work. Record deviations from required lines and levels. Include beginning and ending dates and times of surveys, weather conditions, name and duty of each survey party member, and types of instruments and tapes used. Make the log available for reference by Architect.

3.5 FIELD ENGINEERING

A. Reference Points: Locate existing permanent benchmarks, control points, and similar reference points before beginning the Work. Preserve and protect permanent benchmarks and control points during construction operations.

B. Benchmarks: Establish and maintain a minimum of two permanent benchmarks on Project site, referenced to data established by survey control points. Comply with authorities having jurisdiction for type and size of benchmark.
   1. Record benchmark locations, with horizontal and vertical data, on Project Record Documents.

3.6 INSTALLATION

A. General: Locate the Work and components of the Work accurately, in correct alignment and elevation, as indicated.
   1. Make vertical work plumb and make horizontal work level, unless otherwise indicated.
   2. Where space is limited, install components to maximize space available for maintenance and ease of removal for replacement.
   3. Conceal pipes, ducts, and wiring in finished areas, unless otherwise indicated.

B. Install products as specified in individual sections, in accordance with manufacturer's instructions and recommendations, and so as to avoid waste due to necessity for replacement.

C. Comply with manufacturer's written instructions and recommendations for installing products in applications indicated.

D. Install products at the time and under conditions that will ensure the best possible results. Maintain conditions required for product performance until Substantial Completion.

E. Conduct construction operations so no part of the Work is subjected to damaging operations or loading in excess of that expected during normal conditions of occupancy.

F. Anchors and Fasteners: Provide anchors and fasteners as required to anchor each component securely in place, accurately located and aligned with other portions of the Work.
   1. Mounting Heights: Where mounting heights are not indicated, mount components at heights directed by Architect.
   2. Allow for building movement, including thermal expansion and contraction.
   3. Joints: Make joints of uniform width. Where joint locations in exposed work are not indicated, arrange joints for the best visual effect. Fit exposed connections together to form hairline joints.
   4. Hazardous Materials: Use products, cleaners, and installation materials that are not considered hazardous.

G. Install equipment and fittings plumb and level, neatly aligned with adjacent vertical and horizontal lines, unless otherwise indicated.

H. Make consistent texture on surfaces, with seamless transitions, unless otherwise indicated.

I. Make neat transitions between different surfaces, maintaining texture and appearance.

3.7 PROGRESS CLEANING

A. General: Clean Project site and work areas daily, including common areas. Coordinate progress cleaning for joint-use areas where more than one installer has worked. Enforce requirements strictly. Dispose of materials lawfully.
   1. Comply with requirements in NFPA 241 for removal of combustible waste materials and debris.
   2. Do not hold materials more than 7 days during normal weather or 3 days if the temperature is expected to rise above 80 deg F.
   3. Containerize hazardous and unsanitary waste materials separately from other waste. Mark containers appropriately and dispose of legally, according to regulations.
   4. Site: Maintain Project site free of waste materials and debris.
   5. Work Areas: Clean areas where work is in progress to the level of cleanliness necessary for proper execution of the Work.
      a. Remove liquid spills promptly.
      b. Where dust would impair proper execution of the Work, broom-clean or vacuum the entire work area, as appropriate.
   6. Installed Work: Keep installed work clean. Clean installed surfaces according to written instructions of manufacturer or fabricator of product installed, using only cleaning materials specifically recommended. If specific cleaning materials are not recommended, use cleaning materials that are not hazardous to health or property and that will not damage exposed surfaces.
   7. Concealed Spaces: Remove debris and rubbish from pipe chases, plenums, attics, crawl spaces, and other closed or remote spaces, prior to enclosing the space.
   8. Waste Disposal: Burying or burning waste materials on-site will not be permitted. Washing waste materials down sewers or into waterways will not be permitted.
   9. During handling and installation, clean and protect construction in progress and adjoining materials already in place. Apply protective covering where required to ensure protection from damage or deterioration at Substantial Completion.
   10. Clean and provide maintenance on completed construction as frequently as necessary through the remainder of the construction period. Adjust and lubricate operable components to ensure operability without damaging effects.
   11. Limiting Exposures: Supervise construction operations to assure that no part of the construction completed or in progress, is subject to harmful, dangerous, damaging, or otherwise deleterious exposure during the construction period.
   12. Collect and remove waste materials, debris, and trash/rubbish from site periodically and dispose off-site; do not burn or bury.

3.8 STARTING AND ADJUSTING

A. Start equipment and operating components to confirm proper operation. Remove malfunctioning units, replace with new units, and retest.

B. Adjust operating components for proper operation without binding. Adjust equipment for proper operation.

C. Test each piece of equipment to verify proper operation. Test and adjust controls and safeties. Replace damaged and malfunctioning controls and equipment.

3.9 CORRECTION OF THE WORK

A. Repair or remove and replace defective construction. Restore damaged substrates and finishes. Comply with requirements in Section 017329 - Cutting and Patching.
   1. Repairing includes replacing defective parts, refinishing damaged surfaces, touching up with matching materials, and properly adjusting operating equipment.
   2. Restore permanent facilities used during construction to their specified condition.
   3. Remove and replace damaged surfaces that are exposed to view if surfaces cannot be repaired without visible evidence of repair.
   4. Repair components that do not operate properly. Remove and replace operating components that cannot be repaired.
   5. Remove and replace chipped, scratched, and broken glass or reflective surfaces.

3.10 DEMONSTRATION AND INSTRUCTION

A. Demonstrate operation and maintenance of products to Owner's personnel two weeks prior to date of Substantial Completion.

3.11 PROTECTION OF INSTALLED WORK

A. Protect installed work from damage by construction operations.

B. Provide special protection where specified in individual specification sections.

C. Provide temporary and removable protection for installed products. Control activity in immediate work area to prevent damage.

D. Provide protective coverings at walls, projections, jambs, sills, and soffits of openings.

E. Protect finished floors, stairs, and other surfaces from traffic, dirt, wear, damage, or movement of heavy objects, by protecting with durable sheet materials.

F. Prohibit traffic or storage upon waterproofed or roofed surfaces. If traffic or activity is necessary, obtain recommendations for protection from waterproofing or roofing material manufacturer.

G. Remove protective coverings when no longer needed; reuse or recycle plastic coverings if possible.

3.12 ADJUSTING

A. Adjust operating products and equipment to ensure smooth and unhindered operation.

B. Testing, adjusting, and balancing HVAC systems: Refer to Drawings.

3.13 FINAL CLEANING

A. General: Perform final cleaning. Conduct cleaning and waste-removal operations to comply with local laws and ordinances and Federal and local environmental and antipollution regulations.

B. Execute final cleaning prior to Substantial Completion.
   1. Clean areas to be occupied by Owner prior to final completion before Owner occupancy.

C. Use cleaning materials that are nonhazardous.

D. Clean interior glass, surfaces exposed to view; remove temporary labels, stains and foreign substances, polish transparent and glossy surfaces, vacuum carpeted and soft surfaces.

E. Remove all labels that are not permanent. Do not paint or otherwise cover fire test labels or nameplates on mechanical and electrical equipment.

F. Remove tools, construction equipment, machinery, and surplus material from Project site.

G. Clean exposed exterior and interior hard-surfaced finishes to a dirt-free condition,free of stains, films, and similar foreign substances.
   1. Avoid disturbing natural weathering of exterior surfaces.
   2. Restore reflective surfaces to their original condition.

H. Remove debris and surface dust from limited access spaces, including plenums, shafts, equipment vaults, and similar spaces.

I. Sweep concrete floors broom clean in unoccupied spaces.

J. Vacuum carpet and similar soft surfaces, removing debris and excess nap; clean according to manufacturer's recommendations if visible soil or stains remain.

K. Clean transparent materials, including mirrors and glass in doors and windows. Remove glazing compounds and other noticeable, vision-obscuring materials. Polish mirrors and glass, taking care not to scratch surfaces.

L. Clean equipment and fixtures to a sanitary condition with cleaning materials appropriate to the surface and material being cleaned.

M. Replace filters of operating equipment. Clean exposed surfaces of diffusers, registers, and grills.

N. Clean ducts, blowers, and coils if units were operated without filters during construction or that display contamination with particulate matter on inspection.
   1. Clean HVAC system in compliance with NADCA Standard; 2013. Provide written report on completion of cleaning.

O. Clean plumbing fixtures to a sanitary condition, free of stains, including stains resulting from water exposure.

P. Clean debris from roofs, gutters, downspouts, and drainage systems.

Q. Clean site; sweep paved areas, rake clean landscaped surfaces.

R. Clean light fixtures, lamps, globes, and reflectors to function with full efficiency.

S. Remove waste, surplus materials, trash/rubbish, and construction facilities from the site; dispose of in legal manner; do not burn or bury.

T. Clean Owner-occupied areas of work.

U. Provide Project Manager with clean material's MSDS sheets.

3.14 MAINTENANCE

A. Provide service and maintenance of components indicated in specification sections.

B. Maintenance Period: As indicated in specification sections or, if not indicated, not less than one year from the Date of Substantial Completion or the length of the specified warranty, whichever is longer.

C. Examine system components at a frequency consistent with reliable operation. Clean, adjust, and lubricate as required.

D. Include systematic examination, adjustment, and lubrication of components. Repair or replace parts whenever required. Use parts produced by the manufacturer of the original component.

E. Maintenance service shall not be assigned or transferred to any agent or subcontractor without prior written consent of the Owner.

END OF SECTION

SECTION 017419 - CONSTRUCTION WASTE MANAGEMENT AND DISPOSAL

PART 1 GENERAL

1.1 WASTE MANAGEMENT REQUIREMENTS

A. Owner requires that this project generate the least amount of trash and waste possible.

B. Employ processes that ensure the generation of as little waste as possible due to error, poor planning, breakage, mishandling, contamination, or other factors.

C. Minimize trash/waste disposal in landfills; reuse, salvage, or recycle as much waste as economically feasible.

D. Contractor shall submit periodic Waste Disposal Reports; all landfill disposal, incineration, recycling, salvage, and reuse must be reported regardless of to whom the cost or savings accrues; use the same units of measure on all reports.

E. Methods of trash/waste disposal that are not acceptable are:
   1. Burning on the project site.
   2. Burying on the project site.
   3. Dumping or burying on other property, public or private.
   4. Other illegal dumping or burying.

F. Regulatory Requirements: Contractor is responsible for knowing and complying with regulatory requirements, including but not limited to Federal, state and local requirements, pertaining to legal disposal of all construction and demolition waste materials.

1.2 DEFINITIONS

A. Clean: Untreated and unpainted; not contaminated with oils, solvents, caulk, or the like.

B. Construction and Demolition Waste: Solid wastes typically including building materials, packaging, trash, debris, and rubble resulting from construction, remodeling, repair and demolition operations.

C. Hazardous: Exhibiting the characteristics of hazardous substances, i.e., ignitibility, corrosivity, toxicity or reactivity.

D. Nonhazardous: Exhibiting none of the characteristics of hazardous substances, i.e., ignitibility, corrosivity, toxicity, or reactivity.

E. Nontoxic: Neither immediately poisonous to humans nor poisonous after a long period of exposure.

F. Recyclable: The ability of a product or material to be recovered at the end of its life cycle and remanufactured into a new product for reuse by others.

G. Recycle: To remove a waste material from the project site to another site for remanufacture into a new product for reuse by others.

H. Recycling: The process of sorting, cleansing, treating and reconstituting solid waste and other discarded materials for the purpose of using the altered form. Recycling does not include burning, incinerating, or thermally destroying waste.

I. Return: To give back reusable items or unused products to vendors for credit.

J. Reuse: To reuse a construction waste material in some manner on the project site.

K. Salvage: To remove a waste material from the project site to another site for resale or reuse by others.

L. Sediment: Soil and other debris that has been eroded and transported by storm or well production run-off water.

M. Source Separation: The act of keeping different types of waste materials separate beginning from the first time they become waste.

N. Toxic: Poisonous to humans either immediately or after a long period of exposure.

O. Trash: Any product or material unable to be reused, returned, recycled, or salvaged.

P. Waste: Extra material or material that has reached the end of its useful life in its intended use. Waste includes salvageable, returnable, recyclable, and reusable material.

1.3 SUBMITTALS

A. See Section 013000 - Administrative Requirements, for submittal procedures.

B. Waste Disposal Reports: Submit at specified intervals, with details of quantities of trash and waste, means of disposal or reuse, and costs; show both totals to date and since last report.
   1. Submit updated Report with each Application for Progress Payment; failure to submit Report will delay payment.
   2. Submit Report on a form acceptable to Owner.
   3. Landfill Disposal: Include the following information:
      a. Identification of material.
      b. Amount, in tons or cubic yards, of trash/waste material from the project disposed of in landfills.
      c. State the identity of landfills, total amount of tipping fees paid to landfill, and total disposal cost.
      d. Include manifests, weight tickets, receipts, and invoices as evidence of quantity and cost.
   4. Incinerator Disposal: Include the following information:
      a. Identification of material.
      b. Amount, in tons or cubic yards, of trash/waste material from the project delivered to incinerators.
      c. State the identity of incinerators, total amount of fees paid to incinerator, and total disposal cost.
      d. Include manifests, weight tickets, receipts, and invoices as evidence of quantity and cost.
   5. Recycled and Salvaged Materials: Include the following information for each:
      a. Identification of material, including those retrieved by installer for use on other projects.
      b. Amount, in tons or cubic yards, date removed from the project site, and receiving party.
      c. Transportation cost, amount paid or received for the material, and the net total cost or savings of salvage or recycling each material.
      d. Include manifests, weight tickets, receipts, and invoices as evidence of quantity and cost.
      e. Certification by receiving party that materials will not be disposed of in landfills or by incineration.
   6. Material Reused on Project: Include the following information for each:

a. Identification of material and how it was used in the project.
b. Amount, in tons or cubic yards.
c. Include weight tickets as evidence of quantity.

7. Other Disposal Methods: Include information similar to that described above, as appropriate to disposal method.

PART 3 EXECUTION

2.1 WASTE MANAGEMENT PROCEDURES

A. See Section 013000 for additional requirements for project meetings, reports, submittal procedures, and project documentation.

B. See Section 015000 for additional requirements related to trash/waste collection and removal facilities and services.

C. See Section 016000 for waste prevention requirements related to delivery, storage, and handling.

D. See Section 017000 for trash/waste prevention procedures related to demolition, cutting and patching, installation, protection, and cleaning.

2.2 WASTE MANAGEMENT PLAN IMPLEMENTATION

A. Manager: Designate an on-site person or persons responsible for instructing workers and overseeing and documenting results of the Waste Management Plan.

B. Communication: Distribute copies of the Waste Management Plan to job site foreman, each subcontractor, Owner, and Architect.

C. Instruction: Provide on-site instruction of appropriate separation, handling, and recycling, salvage, reuse, and return methods to be used by all parties at the appropriate stages of the project.

D. Meetings: Discuss trash/waste management goals and issues at project meetings.
1. Prebid meeting.
2. Preconstruction meeting.
3. Regular job-site meetings.

E. Facilities: Provide specific facilities for separation and storage of materials for recycling, salvage, reuse, return, and trash disposal, for use by all contractors and installers.
1. Provide containers as required.
2. Provide adequate space for pick-up and delivery and convenience to subcontractors.
3. Keep recycling and trash/waste bin areas neat and clean and clearly marked in order to avoid contamination of materials.

F. Hazardous Wastes: Separate, store, and dispose of hazardous wastes according to applicable regulations.

G. Recycling: Separate, store, protect, and handle at the site identified recyclable waste products in order to prevent contamination of materials and to maximize recyclability of identified materials. Arrange for timely pickups from the site or deliveries to recycling facility in order to prevent contamination of recyclable materials.

H. Reuse of Materials On-Site: Set aside, sort, and protect separated products in preparation for reuse.

I. Salvage: Set aside, sort, and protect products to be salvaged for reuse off-site.

END OF SECTION

SECTION 017510 - ELECTRICAL SYSTEMS COMMISSIONING

PART 1 – GENERAL

1.1 GENERAL

A. The electrical systems commissioning shall include a demonstration by the Contractor that all electrical equipment and/or systems, all emergency power equipment, and all lighting controls have been installed, configured, and tested in conformance with the project specifications. The commissioning process shall demonstrate that each electrical system component has been properly installed and that the associated electrical test data corresponds with the requirements of the contract documents. The electrical contractor (along with any other necessary parties) shall complete a 'pre-commissioning checkout' and shall certify in writing that all electrical systems and equipment have been verified to be operating in accordance with the requirements stated in the contract documents prior to requesting date(s) for the final on-site electrical systems commissioning session(s).

B. The Contractor shall schedule an electrical systems pre-commissioning meeting with the Owner's representatives at least four weeks prior to beginning testing and check-out of the electrical systems and equipment. This meeting will be utilized to review and discuss specific testing requirements and/or procedures (including any required third-party electrical systems testing) and to discuss the anticipated timeframe(s) for conducting the testing and commissioning.

C. Electrical systems commissioning shall be conducted with representatives from the following entities (the required participants shall be confirmed prior to scheduling the commissioning sessions):
   1. General Contractor (with a complete set of plans, specifications, and addenda).
   2. Electrical Contractor (with a complete set of electrical equipment operating and maintenance manuals and with test instruments as required to perform all specified testing/verification).
   3. Factory-authorized technicians for all major equipment (emergency generators, automatic transfer switches, uninterruptible power supplies, lighting controls, fire and/or security systems, etc.).
   4. Electrical Design Engineer (as necessary).
   5. Third party commissioning agent (when applicable).
   6. The aforementioned representatives shall be present during all portions of the testing (and re-testing as required) and shall be equipped to promptly remedy any deficiencies observed during the commissioning process.
   7. Should any of the aforementioned requirements not be met on the date that the commissioning process commences and/or if deficiencies are observed during the commissioning process the commissioning will be considered a failure and the deficiencies will be required to be remedied prior to requesting a date for re-commissioning. There will be no additional costs allowed to the Contractor for re-commissioning sessions as may be required to address work that is found to be in non-compliance with the requirements of this specification and/or in non-compliance with the remainder of the contract documents.
   8. The Contractor shall include adequate time periods for all commissioning tasks in the project schedule. The necessary time periods shall be carefully reviewed with all of the appropriate subcontractors to ensure that the subcontractors are in agreement with the time allotted for each scheduled task.

9. The Contractor shall assist the Owner and/or the third party testing agency by facilitating all required tests and inspections such that the Owner and/or testing agency performs testing and verification only.
10. Successful completion of the entire electrical systems commissioning process shall be a condition of Substantial Completion. The building shall be considered 'ready to utilize for its intended use' only at such time that the entire electrical systems commissioning scope of work is successfully completed and accepted by the Owner.

1.2 ELECTRICAL SYSTEMS COMMISSIONING CHECKLIST

A. Verify clearances at all electrical equipment, panelboards, switchboards, and motor control centers.

B. Verify labeling of all equipment, panelboards, switchboards, motor control centers, and wiring.

C. Verify installation of housekeeping pads for all electrical equipment.

D. Verify anchoring of all electrical equipment.

E. Test torquing of wire terminations and bussing.

F. Verify all fuse ratings, all circuit breaker ratings, and all thermal overload protection settings.

G. Verify that conductor color coding is in compliance with specifications and applicable codes.

H. Test automatic lighting controls (and any associated software/programming).

I. Test polarity and function of all receptacles.

J. Test location and function of all GFCI's and other safety devices.

K. Verify implementation of short circuit and/or coordination studies.

L. Test operation of uninterruptible power supply.

M. Test operation of fire alarm system, emergency egress, and emergency exit lighting systems. This testing or verification process is typically conducted by state and/or local fire authorities.

Note: This checklist is intended to serve only as a guide to typical items that require verification on each project. The actual checklist for each project (typically distributed for review and confirmation at the pre-commissioning meeting) will be expanded as deemed necessary to appropriately test all of the functions and features of the specified electrical systems on each particular project.

PART 2 PRODUCTS - NOT APPLICABLE

PART 3 EXECUTION - NOT APPLICABLE

END OF SECTION

SECTION 017800 - CLOSEOUT PROCEDURES AND SUBMITTALS

PART 1 GENERAL

1.1 RELATED DOCUMENTS

A. Drawings and general provisions of the Contract, including General Conditions and Division 01 - General Requirements Specification Sections apply to this section.

1.2 SECTION INCLUDES

A. Administrative and procedural requirements for contract closeout including, but not limited to the following: (as part of Set of Manuals & Documents for Commissioning process) Inspection procedures including Pre-Functional Checklists and Pre-Substantial Checklists.

B. Functional Testing Procedures (part of Commissioning process)

C. Project record documents.

D. Operation and maintenance data.

E. Substantial Completion procedures.

F. Closeout requirements for specific construction activities are included in the appropriate Sections in Divisions 1 through 48 and shall be coordinated with this Section

1.3 RELATED REQUIREMENTS

A. Section 01 30 00 - Administrative Requirements:

B. Section 01 73 00 - Execution Requirements:

C. Section 017836 - Warranties and Bonds.

D. Section 017900 - Demonstration and Training

E. Individual Product Sections: Specific requirements for operation and maintenance data.

F. Individual Product Sections: Warranties required for specific products or Work.

1.4 SUBMITTALS

A. See Section 013300 - Submittal Requirements, for submittal procedures.

B. Project Record Documents: Submit documents to Architect with claim for final Application for Payment.
   1. Provide duplicate, notarized copies of the documents required in the Final Completion and Final Payment article of the General Conditions.

C. Operation and Maintenance Data:
   1. Submit two copies of preliminary draft or proposed formats and outlines of contents before start of Work. Architect will review draft and return one copy with comments.
   2. For equipment, or component parts of equipment put into service during construction and operated by Owner, submit completed documents within ten days after acceptance.

3. Submit one copy of completed documents 15 days prior to final inspection. This copy will be reviewed and returned after final inspection, with Architect comments. Revise content of all document sets as required prior to final submission.
4. Submit two sets of revised final documents in final form within 10 days after final inspection.

1.5 SUBSTANTIAL COMPLETION

A. Definition: Substantial Completion is that condition which occurs when the Owner accepts the certification of the Architect that construction is sufficiently complete in accordance with the Contract Documents so that the Project may be occupied for the use for which it is intended.

B. Contractor Notification: When Contractor considers work substantially complete, and after the building commissioning and training, submit written declaration to the Architect that Work or designated portion thereof, is substantially complete. Include list of items to be completed or corrected.

C. Preliminary Procedures: Before requesting inspection for determining date of Substantial Completion, complete the following. List items below that are incomplete with request.
   1. Prepare a list of items to be completed and corrected (Contractor's punch list), the value of items on the list, and reasons why the Work is not complete.
   2. Advise Owner of pending insurance changeover requirements.
   3. Submit specific warranties, workmanship bonds, maintenance service agreements, final certifications, and similar documents.
   4. Obtain and submit releases permitting Owner unrestricted use of the Work and access to services and utilities. Include occupancy permits, operating certificates, and similar re-leases.
   5. Certificates of Release: Obtain and submit releases from authorities having jurisdiction permitting Owner unrestricted use of the Work and access to services and utilities. Include occupancy permits, operating certificates, and similar releases.
   6. Prepare and submit: Completed Commissioning Manual including but not limited to - Summary by specification # Record of Approved Submittals and Samples, Project Record Documents (including but not limited to As-Built Record Drawings, As-Built Record Specifications, Operating and Maintenance Manuals, Certification of No Asbestos Products Incorporated in Project, Completed Punch Lists, final completion construction photographic documentation, damage or settlement surveys, property surveys, and similar final record information.
   7. Make final changeover of permanent locks and deliver keys to Owner. Advise Owner's personnel of changeover in security provisions.
   8. Complete startup testing of systems.
   9. Submit test/adjust/balance records and Specification compliant Final Report.
   10. Terminate and remove temporary facilities from Project site, along with mockups, construction tools, and similar elements.
   11. Advise Owner of changeover in heat and other utilities.
   12. Submit changeover information related to Owner's occupancy, use, operation, and maintenance.
   13. Complete final cleaning requirements, including touchup painting.
   14. Touch up and otherwise repair and restore marred exposed finishes to eliminate visual defects.

15. If 100 percent completion cannot be shown, include a list of incomplete items, the value of incomplete construction, and reasons the Work is not complete.
16. Prior to preliminary Substantial Completion and Inspection - Submit:
    a. Operating and Maintenance Data
    b. Keys and keying schedule
    c. Guarantees, Warranties and Bonds
    d. Completed pre-substantial completion checklists

D. Preliminary Inspection: Architect will make a preliminary inspection within 7 business days after receipt of Contractor's declaration.

E. Submit a written request for inspection for Substantial Completion. Upon receipt of request, Construction Manager will either proceed with inspection or notify Contractor of unfulfilled requirements. Architect will prepare the Certificate of Substantial Completion A.I.A. Document G704 or similar, after inspection or will notify Contractor of items, either on Contractor's list or additional items identified by Architect, that must be completed or corrected before certificate will be issued.
    1. Re-inspection: Request re-inspection when the Work identified in previous inspections as incomplete is completed or corrected.
    2. Results of completed inspection will form the basis of requirements for final completion.

F. Upon determining that Work is substantially complete, Architect will:
    1. Punch List: Prepare a punch list of items to be completed or corrected, as determined by the inspection.
    2. Organization of List: Include name and identification of each space and area affected by construction operations for incomplete items and items needing correction including, if necessary, areas disturbed by Contractor that are outside the limits of construction.
        a. Organize list of spaces in sequential order, starting with exterior areas first and proceeding from lowest floor to highest floor.
        b. Include the following information at the top of each page:
            1) Project name.
            2) Date.
            3) Name of Architect and Construction Manager.
            4) Name of Contractor.
            5) Page number.
        c. Submit list of incomplete items in the following format:
            1) PDF electronic file.
    3. Certificate: Prepare and process a certificate of substantial completion, containing:
        a. Date of substantial completion.
        b. Punchlist of items to be completed or corrected.
        c. The time within which punchlist items shall be completed or corrected.
        d. Date and time the Owner will take occupancy of Project or designated portion thereof.
        e. Responsibilities of Owner and Contractor for:
            1) Insurance.
            2) Utilities.
            3) Operation and maintenance of mechanical, electrical and other systems.
            4) Maintenance and cleaning.
            5) Security.
        f. Signatures of:

1) Architect.
2) General Contractor.
3) Owner.
4) Prime Contractor.

G. Contractor is responsible for the following:
   1. Corrections: Complete all Work listed for completion or correction within designated time.
   2. Final Cleaning: Perform final cleaning.

H. Occupancy: Using Agency will occupy Project or designated portions thereof under provisions stated in the Certificate of Substantial Completion.

I. Complete All Work: At time of inspection, should substantial completion not be certified, Contractor shall complete the Work and resubmit declaration in accordance with the requirements of this Section.

1.6 FINAL ACCEPTANCE

A. Preliminary Procedures: Before requesting final inspection for determining final completion, complete the following:
   1. Submit the final payment request with releases and supporting documentation not previously submitted and accepted. Include insurance certificates for products and complete operations where required.
   2. Submit an updated final statement, accounting for final additional changes to the Contract Sum.
   3. Submit certified copy of the Architect's final inspection list of items to be completed or corrected, endorsed and dated by the Architect. The certified copy of the list shall state that each item has been completed or otherwise resolved for acceptance and shall be endorsed and dated by the Architect.
   4. Submit consent of surety to final payment.
   5. Submit evidence of final, continuing insurance coverage complying with insurance requirements.
   6. Submit pest-control final inspection report and warranty.
   7. Instruct Owner's personnel in operation, adjustment, and maintenance of products, equipment, and systems.

B. Final Inspection: Submit a written request for final inspection for acceptance. On receipt of request, Architect and Construction Manager will either proceed with inspection with Contractor or/and as appropriate notify Contractor of unfulfilled requirements to ensure completion of all Contract requirements.

C. Closeout Documents: Architect will prepare and process closeout documents when all Work is considered finally complete in accord with Contract Document requirements including all Deliverable Documentation.

D. Architect will prepare a final Certificate for Payment after inspection or will notify Contractor of construction that must be completed or corrected before certificate will be issued.

E. Re-inspection Procedure:
   1. The Architect will re-inspect the Work upon receipt of notice that the Work, including inspection list items from earlier inspections, has been completed, except for items whose completion is delayed under circumstances acceptable to the Architect.

2. Upon successful completion of re-inspection, the Architect will prepare a certificate of final acceptance. If the Work is incomplete, the Architect will advise the Contractor of Work that is incomplete or of obligations that have not been fulfilled but are required for final acceptance. When necessary, reinspection will be repeated.

PART 2 PRODUCTS - NOT USED

PART 3 EXECUTION

3.1 CLOSEOUT PROCEDURES

A. Accompany Project Manager on preliminary inspection to determine items to be listed for completion or correction in Contractor's Notice of Substantial Completion.

B. Accompany Project Manager on preliminary final inspection.

3.2 CLOSEOUT SUBMITTALS

A. Make submittals that are required by governing or other authorities.
   1. Provide copies to Architect and Owner.

B. Accompany Project Coordinator on preliminary inspection to determine items to be listed for completion or correction in Contractor's Notice of Substantial Completion.

C. Notify Architect when work is considered ready for Substantial Completion.

D. Submit written certification that Contract Documents have been reviewed, work has been inspected, and that work is complete in accordance with Contract Documents and ready for Architect's review.

E. Owner will occupy all of the building as specified in Section 01 10 00.

F. Correct items of work listed in executed Certificates of Substantial Completion and comply with requirements for access to Owner-occupied areas.

G. Accompany Project Coordinator on preliminary final inspection.

H. Notify Architect when work is considered finally complete.

I. Complete items of work determined by Architect's final inspection.

3.3 PROJECT RECORD DOCUMENTS

A. Maintain on site one set of the following record documents; record actual revisions to the Work:
   1. Drawings.
   2. Specifications.
   3. Addenda.
   4. Change Orders and other modifications to the Contract.
   5. Reviewed shop drawings, product data, and samples.

6. Manufacturer's instruction for assembly, installation, and adjusting.
7. Inspection Reports.
8. Laboratory Test Records.
9. Field Test Reports and Records.
10. Factory Test Reports and Records.

B. Ensure entries are complete and accurate, enabling future reference by Owner.

C. Maintain for record purposes at a location approved by the Architect /Owner, electronic files for those shop drawings and other documents which are required to be submitted electronically. Ensure that backups of electronic files are made on a regular basis and stored at a remote location.

D. Store record documents separate from documents used for construction.

E. Record information concurrent with construction progress.

F. Specifications: Legibly mark and record at each product section description of actual products installed, including the following:
1. Manufacturer's name and product model and number.
2. Product substitutions or alternates utilized.
3. Changes made by Addenda and modifications.

G. Record Drawings and Shop Drawings: Legibly mark each item to record actual construction including:
1. Measured depths of foundations in relation to finish first floor datum.
2. Measured horizontal and vertical locations of underground utilities and appurtenances, referenced to permanent surface improvements.
3. Measured locations of internal utilities and appurtenances concealed in construction, referenced to visible and accessible features of the Work.
4. Field changes of dimension and detail.
5. Details not on original Contract drawings.

H. Final Punchlist.

I. Receipt from AHJ regarding substantial completion and certificate of occupancy.

3.4 OPERATION AND MAINTENANCE DATA

A. Owner's Manual: Prior to final payment, provide three copies (two printed and one digital) hard-back, loose-leaf binders, and a “pdf” format file of same, containing the following required submittals and any others required in other Sections, suitably typed, indexed and labeled for ready reference, to the Owner with notification to the Architect of each transmittal and an affidavit that the Manual is complete and in accordance with the Project Specifications.

B. Source Data: For each product or system, list names, addresses and telephone numbers of Subcontractors and suppliers, including local source of supplies and replacement parts.

C. Product Data: Mark each sheet to clearly identify specific products and component parts, and data applicable to installation. Delete inapplicable information.
1. Warranties and certifications.
2. Affidavit from General Contractor and subcontractors on use of asbestos free materials.
3. Maintenance and operating instructions and parts list.

4. List of extra materials delivered to Owner, signed by Owner's representative.
5. Other items required by the Specifications.

D. Drawings: Supplement product data to illustrate relations of component parts of equipment and systems, to show control and flow diagrams. Do not use Project Record Documents as maintenance drawings.

E. Typed Text: As required to supplement product data. Provide logical sequence of instructions for each procedure, incorporating manufacturer's instructions.

3.5 OPERATION AND MAINTENANCE DATA FOR MATERIALS AND FINISHES

A. For Each Product, Applied Material, and Finish:
1. Product data, with catalog number, size, composition, and color and texture designations.
2. Information for re-ordering custom manufactured products.

B. Instructions for Care and Maintenance: Manufacturer's recommendations for cleaning agents and methods, precautions against detrimental cleaning agents and methods, and recommended schedule for cleaning and maintenance.

C. Moisture protection and weather-exposed products: Include product data listing applicable reference standards, chemical composition, and details of installation. Provide recommendations for inspections, maintenance, and repair.

D. Additional information as specified in individual product specification sections.

E. Where additional instructions are required, beyond the manufacturer's standard printed instructions, have instructions prepared by personnel experienced in the operation and maintenance of the specific products.

F. Provide a listing in Table of Contents for design data, with tabbed fly sheet and space for insertion of data.

3.6 OPERATION AND MAINTENANCE DATA FOR EQUIPMENT AND SYSTEMS

A. For Each Item of Equipment and Each System:
1. Description of unit or system, and component parts.
2. Identify function, normal operating characteristics, and limiting conditions.
3. Include performance curves, with engineering data and tests.
4. Complete nomenclature and model number of replaceable parts.

B. Where additional instructions are required, beyond the manufacturer's standard printed instructions, have instructions prepared by personnel experienced in the operation and maintenance of the specific products.

C. Panelboard Circuit Directories: Provide electrical service characteristics, controls, and communications; typed.

D. Include color coded wiring diagrams as installed.

E. Operating Procedures: Include start-up, break-in, and routine normal operating instructions and sequences. Include regulation, control, stopping, shut-down, and emergency instructions. Include summer, winter, and any special operating instructions.

F. Maintenance Requirements: Include routine procedures and guide for preventative maintenance and trouble shooting; disassembly, repair, and reassembly instructions; and alignment, adjusting, balancing, and checking instructions.

G. Provide servicing and lubrication schedule, and list of lubricants required.

H. Include manufacturer's printed operation and maintenance instructions.

I. Include sequence of operation by controls manufacturer.

J. Provide original manufacturer's parts list, illustrations, assembly drawings, and diagrams required for maintenance.

K. Provide control diagrams by controls manufacturer as installed.

L. Provide Contractor's coordination drawings, with color coded piping diagrams as installed.

M. Provide charts of valve tag numbers, with location and function of each valve, keyed to flow and control diagrams.

N. Provide list of original manufacturer's spare parts, current prices, and recommended quantities to be maintained in storage.

O. Include test and balancing reports.

P. Additional Requirements: As specified in individual product specification sections.

3.7 ASSEMBLY OF OPERATION AND MAINTENANCE MANUALS

A. Assemble operation and maintenance data into durable manuals for Owner's personnel use, with data arranged in the same sequence as, and identified by, the specification sections.

B. Where systems involve more than one specification section, provide separate tabbed divider for each system.

C. Submit two draft copies of the Operation and Maintenance Manuals a minimum of 14 days prior to requesting the inspection for Substantial Completion or the scheduled date for Substantial Completion, whichever is earliest.

D. Prepare instructions and data by personnel experienced in maintenance and operation of described products.

E. Prepare data in the form of an instructional manual.

F. Prior to the final payment, submit to the Owner, one binder with the required information identified in this section.

G. Binders: Commercial quality, 8-1/2 by 11 inch three D side ring binders with durable plastic covers; 2 inch maximum ring size. When multiple binders are used, correlate data into related consistent groupings.

H. Cover: Identify each binder with typed or printed title OPERATION AND MAINTENANCE INSTRUCTIONS; identify title of Project; identify subject matter of contents.

I. Project Directory: Title and address of Project; names, addresses, and telephone numbers of Architect, Consultants, Contractor and subcontractors, with names of responsible parties.

J. Tables of Contents: List every item separated by a divider, using the same identification as on the divider tab; where multiple volumes are required, include all volumes Tables of Contents in each volume, with the current volume clearly identified.

K. Dividers: Provide tabbed dividers for each separate product and system; identify the contents on the divider tab; immediately following the divider tab include a description of product and major component parts of equipment.

L. Text: Manufacturer's printed data, or typewritten data on 24 pound paper.

M. Drawings: Provide with reinforced punched binder tab. Bind in with text; fold larger drawings to size of text pages.

N. Arrange content by systems under section numbers and sequence of Table of Contents of this Project Manual.

O. Contents: Prepare a Table of Contents for each volume, with each product or system description identified, in three parts as follows:
   1. Part 1: Directory, listing names, addresses, and telephone numbers of Architect, Contractor, Subcontractors, and major equipment suppliers.
   2. Part 2: Operation and maintenance instructions, arranged by system and subdivided by specification section. For each category, identify names, addresses, and telephone numbers of Subcontractors and suppliers. Identify the following:
      a. Significant design criteria.
      b. List of equipment.
      c. Parts list for each component.
      d. Operating instructions.
      e. Maintenance instructions for equipment and systems.
      f. Maintenance instructions for special finishes, including recommended cleaning methods and materials, and special precautions identifying detrimental agents.
   3. Part 3: Project documents and certificates, including the following:
      a. Shop drawings and product data.
      b. Air and water balance reports.
      c. Certificates.
      d. Photocopies of warranties and bonds.

P. Provide a listing in Table of Contents for design data, with tabbed dividers and space for insertion of data.

Q. Table of Contents: Provide title of Project; names, addresses, and telephone numbers of Architect, Consultants, and Contractor with name of responsible parties; schedule of products and systems, indexed to content of the volume.

3.8 SPARE PARTS AND MAINTENANCE MATERIALS

A. Deliver spare parts, extra stock, tools and other items specified in individual specification sections to the Owner with a copy of the transmittal to the Architect. Label with manufacturer's name and model number where applicable. Obtain a signed and dated receipt from the Owner of this transfer.

END OF SECTION

SECTION 017836 - WARRANTIES AND BONDS

PART 1 GENERAL

1.1 SECTION INCLUDES:

A. Warranties and bonds:

1.2 SUMMARY

A. This Section includes administrative and procedural requirements for warranties required by the Contract Documents, including manufacturer's standard warranties on products and special warranties.
   1. Refer to the General Conditions and Standard Construction Management Agreement for additional terms and requirements affecting the Work.

B. Disclaimers and Limitations: Manufacturer's disclaimers and limitations on product warranties do not relieve the Contractor of the warranty on the Work that incorporates the products. Manufacturer's disclaimers and limitations on product warranties do not relieve suppliers, manufacturers, and subcontractors required to countersign special warranties with the Contractor.

C. Manufacturer's warranties will begin upon Final Acceptance by Owner. Equipment was used, started or operated during construction period. "Acceptance" will be mutually agreed by Owner, Architect, Engineer and Owners Representative.

1.3 DEFINITIONS

A. Standard product warranties are preprinted written warranties published by individual manufacturers for particular products and are specifically endorsed by the manufacturer to the Owner.

B. Special warranties are written warranties required by or incorporated in the Contract Documents, either to extend time limits provided by standard warranties or to provide greater rights for the Owner.

1.4 WARRANTY REQUIREMENTS

A. Related Damages and Losses: When correcting failed or damaged warranted construction, remove and replace construction that has been damaged as a result of such failure or must be removed and replaced to provide access for correction of warranted construction.

B. Reinstatement of Warranty: When Work covered by a warranty has failed and been corrected by replacement or rebuilding, reinstate the warranty by written endorsement. The reinstated warranty shall be equal to the original warranty with an equitable adjustment for depreciation.

C. Replacement Cost: Upon determination that Work covered by a warranty has failed, replace or rebuild the Work to an acceptable condition complying with requirements of the Contract Documents. The Contractor is responsible for the cost of replacing or rebuilding defective Work regardless of whether the Owner has benefitted from use of the Work through a portion of its anticipated useful service life.

D. Owner's Recourse: Expressed warranties made to the Owner are in addition to implied warranties and shall not limit the duties, obligations, rights, and remedies otherwise available

under the law. Expressed warranty periods shall not be interpreted as limitations on the time in which the Owner can enforce such other duties, obligations, rights, or remedies.

1. Rejection of Warranties: The Owner reserves the right to reject warranties and to limit selection to products with warranties not in conflict with requirements of the Contract Documents.

E. Where the Contract Documents require a special warranty, or similar commitment on the Work or part of the Work, the Owner reserves the right to refuse to accept the Work, until the Contractor presents evidence that entities required to countersign such commitments are willing to do so.

1.5 SUBMITTALS

A. See Section 013300 - Submittal Requirements, for submittal procedures.

B. Submit written warranties to the Architect prior to the date certified for Substantial Completion. If the Architect's Certificate of Substantial Completion designates a commencement date for warranties other than the date of Substantial Completion for the Work, or a designated portion of the Work, submit written warranties upon request of the Architect.

1. When a designated portion of the Work is completed and occupied or used by the Owner, by separate agreement with the Contractor during the construction period, submit properly executed warranties to the Architect within 15 days of completion of that designated portion of the Work.

C. When the Contract Documents require the Contractor, or the Contractor and a subcontractor, supplier or manufacturer to execute a special warranty, prepare a written document that contains appropriate terms and identification, ready for execution by the required parties. Submit a draft to the Owner, through the Architect, for approval prior to final execution.

D. Warranties and Bonds:

1. For equipment or component parts of equipment put into service during construction with Owner's permission, submit documents within 10 days after acceptance, to Project Manager.
2. Make other submittals within 10 days after Date of Substantial Completion, prior to final Application for Payment, to Project Manager.
3. For items of Work for which acceptance is delayed beyond Date of Substantial Completion, submit within 10 days after acceptance, listing the date of acceptance as the beginning of the warranty period, to Project Manager.

E. Form of Submittal: At Final Completion compile 2 copies of each required warranty properly executed by the Contractor, or by the Contractor, subcontractor, supplier, or manufacturer. Organize the warranty documents into an orderly sequence based on the table of contents of the Project Manual.

F. Bind warranties and bonds in heavy-duty, commercial-quality, durable 3-ring, vinyl-covered loose-leaf binders, thickness as necessary to accommodate contents, and sized to receive 8-1/2-by-11-inch paper.

1. Provide heavy paper dividers with celluloid covered tabs for each separate warranty. Mark the tab to identify the product or installation. Provide a typed description of the product or installation, including the name of the product, and the name, address, and telephone number of the Installer.

2. Identify each binder on the front and spine with the typed or printed title "WARRANTIES," Project title or name, and name, address and telephone number of the Contractor and equipment supplier; and name of responsible company principal.
3. When warranted construction requires operation and maintenance manuals, provide additional copies of each required warranty, as necessary, for inclusion in each required manual.

PART 2 PRODUCTS (NOT USED)

PART 3 EXECUTION

3.1 LIST OF WARRANTIES

A. Schedule: Provide warranties on products and installations as specified in individual Sections in Divisions 2 through 28.

3.2 WARRANTIES AND BONDS

A. Obtain warranties and bonds, executed in duplicate by responsible Subcontractors, suppliers, and manufacturers, within 10 days after completion of the applicable item of work. Except for items put into use with Owner's permission, leave date of beginning of time of warranty until the Date of Substantial completion is determined.

B. Verify that documents are in proper form, contain full information, and are notarized.

C. Co-execute submittals when required.

D. Retain warranties and bonds until time specified for submission.

E. Manual: Bind in commercial quality 8-1/2 by 11 inch three D side ring binders with durable plastic covers.

F. Table of Contents: Neatly typed, in the sequence of the Table of Contents of the Project Manual, with each item identified with the number and title of the specification section in which specified, and the name of product or work item.

G. Separate each warranty or bond with index tab sheets keyed to the Table of Contents listing. Provide full information, using separate typed sheets as necessary. List Subcontractor, supplier, and manufacturer, with name, address, and telephone number of responsible principal.

END OF SECTION

SECTION 019113 - GENERAL COMMISSIONING REQUIREMENTS

PART 1 GENERAL

1.1 SUMMARY

A. Commissioning is intended to achieve the following specific objectives; this section specifies the Contractor's responsibilities for commissioning:
   1. Verify that the work is installed in accordance with Contract Documents and the manufacturer92s recommendations and instructions, and that it receives adequate operational checkout prior to startup: Startup reports and Prefunctional Checklists executed by Contractor are utilized to achieve this.
   2. Verify and document that functional performance is in accordance with Contract Documents: Functional Tests executed by Contractor and witnessed by the Commissioning Authority are utilized to achieve this.
   3. Verify that operation and maintenance manuals submitted to Owner are complete: Detailed operation and maintenance (O&M) data submittals by Contractor are utilized to achieve this.
   4. Verify that the Owner’s operating personnel are adequately trained: Formal training conducted by Contractor is utilized to achieve this.

B. The Commissioning Authority directs and coordinates all commissioning activities; this section describes some but not all of the Commissioning Authority's responsibilities.

1.2 RELATED REQUIREMENTS

A. Section 017800 - Closeout Procedures and Submittals: Scope and procedures for operation and maintenance manuals and project record documents.

1.3 SUBMITTALS

A. See Section 013000 - Administrative Requirements, for submittal procedures; except:
   1. Make all submittals specified in this section, and elsewhere where indicated for commissioning purposes, directly to the Commissioning Authority, unless they require review by Architect; in that case, submit to Architect first.
   2. Submit one copy to the Commissioning Authority, not to be returned.
   3. Make commissioning submittals on time schedule specified by Commissioning Authority.
   4. Submittals indicated as "Draft" are intended for the use of the Commissioning Authority in preparation of Prefunctional Checklists or Functional Test requirements; submit in editable electronic format, Microsoft Word 2010 preferred.
   5. As soon as possible after submittals made to Architect are approved, submit copy of approved submittal to the Commissioning Authority.

B. Product Data: If submittals to Architect do not include the following, submit copies as soon as possible:
   1. Manufacturer's product data, cut sheets, and shop drawings.
   2. Manufacturer's installation instructions.
   3. Startup, operating, and troubleshooting procedures.
   4. Fan and pump curves.
   5. Factory test reports.
   6. Warranty information, including details of Owner's responsibilities in regard to keeping warranties in force.

C. Manufacturers' Instructions: Submit copies of all manufacturer-provided instructions that are shipped with the equipment as soon as the equipment is delivered.

D. Startup Plans and Reports.

E. Completed Prefunctional Checklists.

PART 2 PRODUCTS

2.1 TEST EQUIPMENT

A. Provide all standard testing equipment required to perform startup and initial checkout and required Functional Testing; unless otherwise noted such testing equipment will NOT become the property of Owner.

B. Calibration Tolerances: Provide testing equipment of sufficient quality and accuracy to test and/or measure system performance with the tolerances specified. If not otherwise noted, the following minimum requirements apply:
   1. Temperature Sensors and Digital Thermometers: Certified calibration within past year to accuracy of 0.5 degree F and resolution of plus/minus 0.1 degree F.
   2. Pressure Sensors: Accuracy of plus/minus 2.0 percent of the value range being measured (not full range of meter), calibrated within the last year.
   3. Calibration: According to the manufacturer’s recommended intervals and when dropped or damaged; affix calibration tags or keep certificates readily available for inspection.

C. Equipment-Specific Tools: Where special testing equipment, tools and instruments are specific to a piece of equipment, are only available from the vendor, and are required in order to accomplish startup or Functional Testing, provide such equipment, tools, and instruments as part of the work at no extra cost to Owner; such equipment, tools, and instruments are to become the property of Owner.

D. Dataloggers: Independent equipment and software for monitoring flows, currents, status, pressures, etc. of equipment.
   1. Dataloggers required to for Functional Tests will be provided by the Commissioning Authority and will not become the property of Owner.

PART 3 EXECUTION

3.1 COMMISSIONING PLAN

A. Commissioning Authority has prepared the Commissioning Plan.
   1. Attend meetings called by the Commissioning Authority for purposes of completing the commissioning plan.
   2. Require attendance and participation of relevant subcontractors, installers, suppliers, and manufacturer representatives.

B. Contractor is responsible for compliance with the Commissioning Plan.

C. Commissioning Plan: The commissioning schedule, procedures, and coordination requirements for all parties in the commissioning process.

D. Commissioning Schedule:

1. Submit anticipated dates of startup of each item of equipment and system to Commissioning Authority within 60 days after award of Contract.
2. Re-submit anticipated startup dates monthly, but not less than 4 weeks prior to startup.
3. Prefunctional Checklists and Functional Tests are to be performed in sequence from components, to subsystems, to systems.
4. Provide sufficient notice to Commissioning Authority for delivery of relevant Checklists and Functional Test procedures, to avoid delay.

3.2 STARTUP PLANS AND REPORTS

A. Startup Plans: For each item of equipment and system for which the manufacturer provides a startup plan, submit the plan not less than 8 weeks prior to startup.

B. Startup Reports: For each item of equipment and system for which the manufacturer provides a startup checklist (or startup plan or field checkout sheet), document compliance by submitting the completed startup checklist prior to startup, signed and dated by responsible entity.

C. Submit directly to the Commissioning Authority.

3.3 PREFUNCTIONAL CHECKLISTS

A. A Prefunctional Checklist is required to be filled out for each item of equipment or other assembly specified to be commissioned.
   1. No sampling of identical or near-identical items is allowed.
   2. These checklists do not replace manufacturers' recommended startup checklists, regardless of apparent redundancy.
   3. Prefunctional Checklist forms will not be complete until after award of the contract; the following types of information will be gathered via the completed Checklist forms:
      a. Certification by installing contractor that the unit is properly installed, started up, and operating and ready for Functional Testing.
      b. Confirmation of receipt of each shop drawing and commissioning submittal specified, itemized by unit.
      c. Manufacturer, model number, and relevant capacity information; list information "as specified," "as submitted," and "as installed."
      d. Serial number of installed unit.
      e. List of inspections to be conducted to document proper installation prior to startup and Functional Testing; these will be primarily static inspections and procedures; for equipment and systems may include normal manufacturer’s start-up checklist items and minor testing.
      f. Sensor and actuator calibration information.

B. Contractor is responsible for filling out Prefunctional Checklists, after completion of installation and before startup; witnessing by the Commissioning Authority is not required unless otherwise specified.
   1. Each line item without deficiency is to be witnessed, initialed, and dated by the actual witness; checklists are not complete until all line items are initialed and dated complete without deficiencies.
   2. Checklists with incomplete items may be submitted for approval provided the Contractor attests that incomplete items do not preclude the performance of safe and reliable Functional Testing; re-submission of the Checklist is required upon completion of remaining items.

3. Individual Checklists may contain line items that are the responsibility of more than one installer; Contractor shall assign responsibility to appropriate installers or subcontractors, with identification recorded on the form.
4. If any Checklist line item is not relevant, record reasons on the form.
5. Contractor may independently perform startup inspections and/or tests, at Contractor's option.
6. Regardless of these reporting requirements, Contractor is responsible for correct startup and operation.
7. Submit completed Checklists to Commissioning Authority within two days of completion.

C. Commissioning Authority is responsible for furnishing the Prefunctional Checklists to Contractor.
1. Initial Drafts: Contractor is responsible for initial draft of Prefunctional Checklist where so indicated in Contract Documents.
2. Provide all additional information requested by Commissioning Authority to aid in preparation of checklists, such as shop drawing submittals, manufacturers' startup checklists, and O&M data.
3. Commissioning Authority may add any relevant items deemed necessary regardless of whether they are explicitly mentioned in Contract Documents or not.
4. When asked to review the proposed Checklists, do so in a timely manner.

D. Commissioning Authority Witnessing: Required for:
1. Each piece of primary equipment, unless sampling of multiple similar units is allowed by the commissioning plan.
2. A sampling of non-primary equipment, as allowed by the commissioning plan.

E. Deficiencies: Correct deficiencies and re-inspect or re-test, as applicable, at no extra cost to Owner.
1. If difficulty in correction would delay progress, report deficiency to the Commissioning Authority immediately.

3.4 FUNCTIONAL TESTS

A. A Functional Test is required for each item of equipment, system, or other assembly specified to be commissioned, unless sampling of multiple identical or near-identical units is allowed by the final test procedures.

B. Contractor is responsible for execution of required Functional Tests, after completion of Prefunctional Checklist and before closeout.

C. Commissioning Authority is responsible for witnessing and reporting results of Functional Tests, including preparation and completion of forms for that purpose.

D. Contractor is responsible for correction of deficiencies and re-testing at no extra cost to Owner; if a deficiency is not corrected and re-tested immediately, the Commissioning Authority will document the deficiency and the Contractor's stated intentions regarding correction.
1. Deficiencies are any condition in the installation or function of a component, piece of equipment or system that is not in compliance with Contract Documents or does not perform properly.
2. When the deficiency has been corrected, the Contractor completes the form certifying that the item is ready to be re-tested and returns the form to the Commissioning Authority; the Commissioning Authority will reschedule the test and the Contractor shall re-test.

3. Identical or Near-Identical Items: If 10 percent, or three, whichever is greater, of identical or near-identical items fail to perform due to material or manufacturing defect, all items will be considered defective; provide a proposal for correction within 2 weeks after notification of defect, including provision for testing sample installations prior to replacement of all items.
4. Contractor shall bear the cost of Owner and Commissioning Authority personnel time witnessing re-testing.
5. Contractor shall bear the cost of Owner and Commissioning Authority personnel time witnessing re-testing if the test failed due to failure to execute the relevant Prefunctional Checklist correctly; if the test failed for reasons that would not have been identified in the Prefunctional Checklist process, Contractor shall bear the cost of the second and subsequent re-tests.

E. Functional Test Procedures:
1. Some test procedures are included in Contract Documents; where Functional Test procedures are not included in Contract Documents, test procedures will be determined by the Commissioning Authority with input by and coordination with Contractor.
2. Examples of Functional Testing:
a. Test the dynamic function and operation of equipment and systems (rather than just components) using manual (direct observation) or monitoring methods under full operation (e.g., the chiller pump is tested interactively with the chiller functions to see if the pump ramps up and down to maintain the differential pressure setpoint).
b. Systems are tested under various modes, such as during low cooling or heating loads, high loads, component failures, unoccupied, varying outside air temperatures, fire alarm, power failure, etc.
c. Systems are run through all the HVAC control system’s sequences of operation and components are verified to be responding as the sequence's state.
d. Traditional air or water test and balancing (TAB) is not Functional Testing; spot checking of TAB by demonstration to the Commissioning Authority is Functional Testing.

F. Deferred Functional Tests: Some tests may need to be performed later, after substantial completion, due to partial occupancy, equipment, seasonal requirements, design or other site conditions; performance of these tests remains the Contractor's responsibility regardless of timing.

3.5 SENSOR AND ACTUATOR CALIBRATION

A. Calibrate all field-installed temperature, relative humidity, carbon monoxide, carbon dioxide, and pressure sensors and gauges, and all actuators (dampers and valves) on this piece of equipment shall be calibrated. Sensors installed in the unit at the factory with calibration certification provided need not be field calibrated.

B. Calibrate using the methods described below; alternate methods may be used, if approved by Commissioning Authority and Owner beforehand. See PART 2 for test instrument requirements. Record methods used on the relevant Prefunctional Checklist or other suitable forms, documenting initial, intermediate and final results.

C. All Sensors:
1. Verify that sensor location is appropriate and away from potential causes of erratic operation.
2. Verify that sensors with shielded cable are grounded only at one end.

3. For sensor pairs that are used to determine a temperature or pressure difference, for temperature make sure they are reading within 0.2 degree F of each other, and for pressure, within tolerance equal to 2 percent of the reading, of each other.
4. Tolerances for critical applications may be tighter.

D. Sensors Without Transmitters - Standard Application:
1. Make a reading with a calibrated test instrument within 6 inches of the site sensor.
2. Verify that the sensor reading, via the permanent thermostat, gauge or building automation system, is within the tolerances in the table below of the instrument-measured value.
3. If not, install offset, calibrate or replace sensor.

E. Sensors With Transmitters - Standard Application.
1. Disconnect sensor.
2. Connect a signal generator in place of sensor.
3. Connect ammeter in series between transmitter and building automation system control panel.
4. Using manufacturer's resistance-temperature data, simulate minimum desired temperature.
5. Adjust transmitter potentiometer zero until 4 mA is read by the ammeter.
6. Repeat for the maximum temperature matching 20 mA to the potentiometer span or maximum and verify at the building automation system.
7. Record all values and recalibrate controller as necessary to comply with specified control ramps, reset schedules, proportional relationship, reset relationship and P/I reaction.
8. Reconnect sensor.
9. Make a reading with a calibrated test instrument within 6 inches of the site sensor.
10. Verify that the sensor reading, via the permanent thermostat, gauge or building automation system, is within the tolerances in the table below of the instrument-measured value.
11. If not, replace sensor and repeat.
12. For pressure sensors, perform a similar process with a suitable signal generator.

F. Sensor Tolerances for Standard Applications: Plus/minus the following maximums:
1. Watthour, Voltage, Amperage: 1 percent of design.
2. Pressure, Air, Water, Gas: 3 percent of design.
3. Air Temperatures (Outside Air, Space Air, Duct Air): 0.4 degrees F.
4. Relative Humidity: 4 percent of design.
5. Barometric Pressure: 0.1 inch of Hg.
6. Flow Rate, Air: 10 percent of design.
7. Flow Rate, Water: 4 percent of design.
8. AHU Wet Bulb and Dew Point: 2.0 degrees F.

G. Critical Applications: For some applications more rigorous calibration techniques may be required for selected sensors. Describe any such methods used on an attached sheet.

H. Valve/Damper Stroke Setup and Check:
1. For all valve/damper actuator positions checked, verify the actual position against the control system readout.
2. Set pump/fan to normal operating mode.
3. Command valve/damper closed; visually verify that valve/damper is closed and adjust output zero signal as required.
4. Command valve/damper to open; verify position is full open and adjust output signal as required.

5. Command valve/damper to a few intermediate positions.
6. If actual valve/damper position does not reasonably correspond, replace actuator or add pilot positioner (for pneumatics).

I. Isolation Valve or System Valve Leak Check: For valves not associated with coils.
1. With full pressure in the system, command valve closed.
2. Use an ultra-sonic flow meter to detect flow or leakage.

3.6 TEST PROCEDURES - GENERAL

A. Provide skilled technicians to execute starting of equipment and to execute the Functional Tests. Ensure that they are available and present during the agreed upon schedules and for sufficient duration to complete the necessary tests, adjustments and problem-solving.

B. Provide all necessary materials and system modifications required to produce the flows, pressures, temperatures, and conditions necessary to execute the test according to the specified conditions. At completion of the test, return all affected equipment and systems to their pre-test condition.

C. Sampling: Where Functional Testing of fewer than the total number of multiple identical or near-identical items is explicitly permitted, perform sampling as follows:
1. Identical Units: Defined as units with same application and sequence of operation; only minor size or capacity difference.
2. Sampling is not allowed for:
   a. Major equipment.
   b. Life-safety-critical equipment.
   c. Prefunctional Checklist execution.
3. XX = the percent of the group of identical equipment to be included in each sample; defined for specific type of equipment.
4. YY = the percent of the sample that if failed will require another sample to be tested; defined for specific type of equipment.
5. Randomly test at least XX percent of each group of identical equipment, but not less than three units. This constitutes the "first sample."
6. If YY percent of the units in the first sample fail, test another XX percent of the remaining identical units.
7. If YY percent of the units in the second sample fail, test all remaining identical units.
8. If frequent failures occur, resulting in more troubleshooting than testing, the Commissioning Authority may stop the testing and require Contractor to perform and document a checkout of the remaining units prior to continuing testing.

D. Manual Testing: Use hand-held instruments, immediate control system readouts, or direct observation to verify performance (contrasted to analyzing monitored data taken over time to make the “observation”).

E. Simulating Conditions: Artificially create the necessary condition for the purpose of testing the response of a system; for example apply hot air to a space sensor using a hair dryer to see the response in a VAV box.

F. Simulating Signals: Disconnect the sensor and use a signal generator to send an amperage, resistance or pressure to the transducer and control system to simulate the sensor value.

G. Over-Writing Values: Change the sensor value known to the control system in the control system to see the response of the system; for example, change the outside air temperature value from 50 degrees F to 75 degrees F to verify economizer operation.

H. Indirect Indicators: Remote indicators of a response or condition, such as a reading from a control system screen reporting a damper to be 100 percent closed, are considered indirect indicators.

I. Monitoring: Record parameters (flow, current, status, pressure, etc.) of equipment operation using dataloggers or the trending capabilities of the relevant control systems; where monitoring of specific points is called for in Functional Test Procedures:
   1. All points that are monitored by the relevant control system shall be trended by Contractor; at the Commissioning Authority's request, Contractor shall trend up to 20 percent more points than specified at no extra charge.
   2. Other points will be monitored by the Commissioning Authority using dataloggers.
   3. At the option of the Commissioning Authority, some control system monitoring may be replaced with datalogger monitoring.
   4. Provide hard copies of monitored data in columnar format with time down left column and at least 5 columns of point values on same page.
   5. Graphical output is desirable and is required for all output if the system can produce it.
   6. Monitoring may be used to augment manual testing.

3.7 OPERATION AND MAINTENANCE MANUALS

A. See Section 017800 - Closeout Procedures and Submittals for additional requirements.

B. Add design intent documentation furnished by Architect to manuals prior to submission to Owner.

C. Submit manuals related to items that were commissioned to Commissioning Authority for review; make changes recommended by Commissioning Authority.

D. Commissioning Authority will add commissioning records to manuals after submission to Owner.

END OF SECTION

SECTION 024126 - SELECTIVE ELECTRICAL DEMOLITION

PART 1 GENERAL

1.1 SUMMARY

A. Section Includes:
   1. Removal of existing electrical equipment, wiring, and conduit in areas subject to modifications on the existing site.
   2. Disposal of materials.
   3. Storage of removed materials.
   4. Identification of utilities.
   5. Salvaged items.
   6. Protection of items to remain as indicated on Drawings.
   7. Relocate existing equipment to accommodate construction.

1.2 CLOSEOUT SUBMITTALS

A. General Conditions: Requirements for submittals.

B. Project Record Documents: Record actual locations of capped utilities, conduits and equipment abandoned in place.

1.3 QUALITY ASSURANCE

A. Perform Work in accordance with local and state standards.

1.4 PRE-INSTALLATION MEETINGS

A. General Conditions: Pre-installation meeting.

B. Convene minimum one week prior to commencing work of this section.

1.5 SEQUENCING

A. General Conditions: Requirements for sequencing.

B. Sequence as requested for project.

1.6 SCHEDULING

A. General Conditions: Requirements for scheduling.

B. Schedule work to coincide with new construction or remodeled/ renovation area.

C. Cease operations immediately when structure appears to be in danger and notify Architect/Engineer. Do not resume operations until directed.

1.7 COORDINATION

A. General Conditions: Requirements for coordination.

B. Conduct demolition to minimize interference with adjacent and occupied buildings.

C. Coordinate demolition work with General Contractor.

D. Coordinate and sequence demolition so as not to cause shutdown of operation of surrounding areas.

E. Shut-down Periods:
   1. Arrange timing of shut-down periods of in service panels with Owner. Do not shut down any utility without prior written approval.
   2. Keep shut-down period to minimum or use intermittent period as directed by Owner.
   3. Maintain life-safety systems in full operation in occupied facilities, or provide notice minimum 3 days in advance.
   4. Identify salvage items in cooperation with Owner.

1.8 CONTRACTOR'S USE OF PREMISES

A. Confine operations at site to areas and limits permitted by law, ordinances, permits; contract documents and general conditions.

B. Protection and safekeeping of products stored on premises is responsibility of contractor supplying product.

C. Deliveries and unloading shall be scheduled to prevent traffic congestion blocking of access or interference with work. Arrange deliveries to avoid larger accumulations of materials than can be suitably stored at site.

D. Contractor shall pay for, or satisfactorily repair, all damages incident to their work, to sidewalks, streets, other public or private property, or to any public utilities occurring during period of work under this contract.

PART 2 PRODUCTS - NOT APPLICABLE

PART 3 EXECUTION

3.1 EXAMINATION

A. General Conditions: Verification of existing conditions before starting work.

B. Visit site and survey existing conditions affecting work prior to bid. Include necessary materials and labor to accomplish the electrical work, including relocation of existing services and utilities on building site in bid. No consideration shall be given to future claims due to existing conditions. Any discrepancies or interference shall be reported immediately to the consultant.

C. Verify wiring and equipment indicated to be demolished serve only abandoned facilities.

D. Verify termination points for demolished services.

3.2 PREPARATION

A. Erect, and maintain temporary safeguards, including warning signs and lights, barricades, and similar measures, for protection of the public, Owner, Contractor's employees, and existing improvements to remain.

B. Temporary egress signage and emergency lighting

3.3 DEMOLITION

A. Demolition Drawings are based on casual field observation and existing record documents. Report discrepancies to Architect/Engineer before disturbing existing installation. Demolish existing electrical work, including auxiliary systems, in areas of existing building shown reworked. Coordinate removal of electrical systems with General Contractor and Owner.

B. Remove exposed abandoned conduit. Cut conduit flush and patch/repair surface.

C. Remove conduit, wire, boxes, and fastening devices to avoid any interference with new installation.

D. Disconnect electrical systems in way of new work.

E. Reconnect equipment being disturbed by renovation work and required for continue service to nearest available panel.

F. Disconnect or shut off service to areas where electrical work is to be removed. Remove electrical fixtures, equipment, and related switches, outlets, conduit and wiring which are not part of final project.

G. Install temporary wiring and connections to maintain existing systems in service during construction.

H. Perform work on energized equipment or circuits with experienced and trained personnel.

I. Remove, relocate, and extend existing installations to accommodate new construction.

J. Repair adjacent construction and finishes damaged during demolition and extension work.

K. Remove exposed abandoned grounding and bonding components, fasteners and supports, and electrical identification components, including abandoned components above accessible ceiling finishes. Cut embedded support elements flush with walls and floors.

L. Clean and repair existing equipment to or to be reinstalled.

M. Protect and retain power to existing active equipment remaining.

N. Cap abandoned empty conduit at both ends.

O. Cut off abandoned conduits concealed in slab one inch below top of base floor slab and patch slab or floor to match existing.

3.4 SALVAGE ITEMS

A. Electrical equipment, wiring, etc., removed and not required to be part of new electrical installation is classed as salvage.

B. The Contractor shall submit a list of salvageable equipment and/or parts identified below that are to be removed. Provide list to Owner for review.

C. The list shall contain the following:
   1. type of equipment
   2. quantity
   3. manufacturer
   4. model #

5. condition (with explanation if needed)

D. Once the list has been reviewed the Contractor will be notified of any equipment deemed reusable by the Owner.

E. Salvageable equipment not selected to be retained by the Owner becomes property of Contractor. Remove from job site.

3.5 REUSABLE ELECTRICAL EQUIPMENT

A. Carefully remove equipment, materials, or fixtures which are to be reused.

B. Disconnect, remove, or relocate existing electrical material and equipment interfering with new installation.

C. Relocate existing lighting fixtures as indicated on Drawings. Clean fixtures and re-lamp. Test fixture to see if it is in good working condition before installation at new location.

3.6 HAZARDOUS MATERIALS

A. Submit Material Safety Data Sheets for all materials furnished in this project defined as hazardous by NFPA. All requirements of the Material Safety Data Sheets shall be implemented and followed judiciously when hazardous materials are installed or otherwise used.

B. All hazardous materials shall be stored and used (mixed, applied, etc.) in strict accordance with the OSHA Standards, and Safety Data Sheets.

3.7 WELDING AND CUTTING

A. Special precautions shall be taken to reduce fire hazards where electric or gas welding or cutting work or soldering is done and suitable fire extinguishing equipment shall be maintained near such operations.

3.8 CLEANING

A. General Conditions: Requirements for cleaning.

B. Remove demolished materials as work progresses. Legally dispose.

C. Keep workplace neat.

END OF SECTION

SECTION 033000 - CAST-IN-PLACE CONCRETE

PART 1 GENERAL

1.1 SECTION INCLUDES

A. Concrete formwork.

B. Concrete for composite floor construction.

C. Elevated concrete slabs.

D. Floors and slabs on grade.

E. Concrete elevator pit and foundation walls.

F. Underslab Vapor Retarder.

G. Concrete reinforcement.

H. Joint devices associated with concrete work.

I. Miscellaneous concrete elements, including equipment pads, equipment pits, light pole bases, and flagpole bases.

J. Concrete curing.

1.2 RELATED REQUIREMENTS

A. Section 033511 - Concrete Floor Finishes: Densifiers, hardeners, applied coatings, and polishing.

B. Section 055100 - Metal Stairs: Concrete Stair Treads.

C. Section 072100 - Building Insulation: Underslab and perimeter insulation.

D. Section 079200 - Joint Sealants: Products and installation for sealants and joint fillers for saw cut joints and isolation joints in slabs.

1.3 REFERENCE STANDARDS

A. ACI 117 - Specification for Tolerances for Concrete Construction and Materials; 2010 (Reapproved 2015).

B. ACI 211.1 - Standard Practice for Selecting Proportions for Normal, Heavyweight, and Mass Concrete; 1991 (Reapproved 2009).

C. ACI 211.2 - Standard Practice for Selecting Proportions for Structural Lightweight Concrete; 1998 (Reapproved 2004).

D. ACI 301 - Specifications for Concrete Construction; 2020.

E. ACI 302.1R - Guide to Concrete Floor and Slab Construction; 2015.

F. ACI 304R - Guide for Measuring, Mixing, Transporting, and Placing Concrete; 2000 (Reapproved 2009).

G. ACI 305R - Guide to Hot Weather Concreting; 2020.

H. ACI 306R - Guide to Cold Weather Concreting; 2016.

I. ACI 308R - Guide to External Curing of Concrete; 2016.

J. ACI 318 - Building Code Requirements for Structural Concrete; 2019, with Errata (2021).

K. ACI 347R - Guide to Formwork for Concrete; 2014, with Errata (2017).

L. ASTM A615/A615M - Standard Specification for Deformed and Plain Carbon-Steel Bars for Concrete Reinforcement; 2020.

M. ASTM A767/A767M - Standard Specification for Zinc-Coated (Galvanized) Steel Bars for Concrete Reinforcement; 2019.

N. ASTM A1064/A1064M - Standard Specification for Carbon-Steel Wire and Welded Wire Reinforcement, Plain and Deformed, for Concrete; 2018a.

O. ASTM C31/C31M - Standard Practice for Making and Curing Concrete Test Specimens in the Field; 2021a.

P. ASTM C33/C33M - Standard Specification for Concrete Aggregates; 2018.

Q. ASTM C39/C39M - Standard Test Method for Compressive Strength of Cylindrical Concrete Specimens; 2021.

R. ASTM C94/C94M - Standard Specification for Ready-Mixed Concrete; 2021b.

S. ASTM C109/C109M - Standard Test Method for Compressive Strength of Hydraulic Cement Mortars (Using 2-in. or [50 mm] Cube Specimens); 2021.

T. ASTM C143/C143M - Standard Test Method for Slump of Hydraulic-Cement Concrete; 2020.

U. ASTM C150/C150M - Standard Specification for Portland Cement; 2021.

V. ASTM C171 - Standard Specification for Sheet Materials for Curing Concrete; 2020.

W. ASTM C172/C172M - Standard Practice for Sampling Freshly Mixed Concrete; 2017.

X. ASTM C173/C173M - Standard Test Method for Air Content of Freshly Mixed Concrete by the Volumetric Method; 2016.

Y. ASTM C260/C260M - Standard Specification for Air-Entraining Admixtures for Concrete; 2010a (Reapproved 2016).

Z. ASTM C309 - Standard Specification for Liquid Membrane-Forming Compounds for Curing Concrete; 2019.

AA. ASTM C330/C330M - Standard Specification for Lightweight Aggregates for Structural Concrete; 2017a.

AB. ASTM C494/C494M - Standard Specification for Chemical Admixtures for Concrete; 2019.

AC. ASTM C579 - Standard Test Methods for Compressive Strength of Chemical-Resistant Mortars, Grouts, Monolithic Surfacings, and Polymer Concretes; 2018.

AD. ASTM C618 - Standard Specification for Coal Fly Ash and Raw or Calcined Natural Pozzolan for Use in Concrete; 2019.

AE. ASTM C685/C685M - Standard Specification for Concrete Made by Volumetric Batching and Continuous Mixing; 2017.

AF. ASTM C827/C827M - Standard Test Method for Change in Height at Early Ages of Cylindrical Specimens of Cementitious Mixtures; 2016.

AG. ASTM C845/C845M - Standard Specification for Expansive Hydraulic Cement; 2018.

AH. ASTM C881/C881M - Standard Specification for Epoxy-Resin-Base Bonding Systems for Concrete; 2020a.

AI. ASTM C1059/C1059M - Standard Specification for Latex Agents for Bonding Fresh to Hardened Concrete; 2021.

AJ. ASTM C1107/C1107M - Standard Specification for Packaged Dry, Hydraulic-Cement Grout (Nonshrink); 2020.

AK. ASTM C1240 - Standard Specification for Silica Fume Used in Cementitious Mixtures; 2020.

AL. ASTM C1315 - Standard Specification for Liquid Membrane-Forming Compounds Having Special Properties for Curing and Sealing Concrete; 2019.

AM. ASTM C1582/C1582M - Standard Specification for Admixtures to Inhibit Chloride-Induced Corrosion of Reinforcing Steel in Concrete; 2011, with Editorial Revision (2017).

AN. ASTM D695 - Standard Test Method for Compressive Properties of Rigid Plastics; 2015.

AO. ASTM D1751 - Standard Specification for Preformed Expansion Joint Filler for Concrete Paving and Structural Construction (Nonextruding and Resilient Bituminous Types); 2018.

AP. ASTM D2103 - Standard Specification for Polyethylene Film and Sheeting; 2015.

AQ. ASTM E1155 - Standard Test Method for Determining FF Floor Flatness and FL Floor Levelness Numbers; 2020.

AR. ASTM E1643 - Standard Practice for Selection, Design, Installation and Inspection of Water Vapor Retarders Used in Contact with Earth or Granular Fill Under Concrete Slabs; 2018a.

AS. ASTM E1745 - Standard Specification for Plastic Water Vapor Retarders Used in Contact with Soil or Granular Fill under Concrete Slabs; 2017.

AT. COE CRD-C 48 - Handbook for Concrete and Cement Standard Test Method for Water Permeability of Concrete; 1992.

AU. COE CRD-C 513 - Handbook for Concrete and Cement Corps of Engineers Specifications for Rubber Waterstops; 1974.

AV. COE CRD-C 572 - Handbook for Concrete and Cement Corps of Engineers Specifications for Polyvinylchloride Waterstop; 1974.

AW. ICC-ES AC380 - Acceptance Criteria for Termite Physical Barrier Systems; 2014, with Editorial Revision (2017).

AX. ICC (IBC) - 2018 - International Building Code; 2018.
1. With Northern Nevada Amendments

1.4 SUBMITTALS

A. See Section 013300 - Submittal Requirements, for submittal procedures.

B. Product Data: Submit manufacturers' data on manufactured products showing compliance with specified requirements and installation instructions.
   1. For curing compounds, provide data on method of removal in the event of incompatibility with floor covering adhesives.

C. Mix Design: Submit proposed concrete mix design.
   1. Indicate proposed mix design complies with requirements of ACI 301, Section 4 - Concrete Mixtures.
   2. Indicate proposed mix design complies with requirements of ACI 318, Chapter 5 - Concrete Quality, Mixing and Placing.

D. Samples: Submit samples of underslab vapor retarder to be used.

E. Test Reports: Submit report for each test or series of tests specified.

F. Test Reports: Submit termite-resistant sheet manufacturer's summary of independent laboratory and field testing for effectiveness in subterranean termite exclusion.

G. Project Record Documents: Accurately record actual locations of embedded utilities and components that will be concealed from view upon completion of concrete work.

H. Warranty: Submit manufacturer warranty and ensure forms have been completed in Owner's name and registered with manufacturer.

1.5 QUALITY ASSURANCE

A. Perform work of this section in accordance with ACI 301 and ACI 318.

B. Follow recommendations of ACI 305R when concreting during hot weather.

C. Follow recommendations of ACI 306R when concreting during cold weather.

1.6 WARRANTY

A. See Section 017000 - Contract Closeout, for additional warranty requirements.

B. Slabs with Moisture Vapor Reducing Admixture (MVRA): Provide warranty to cover cost of flooring failures due to moisture migration from slabs for ten years.
   1. Include cost of repair or removal of failed flooring, placement of topical moisture remediation system, and replacement of flooring with comparable flooring system.

C. Moisture Emission-Reducing Curing and Sealing Compound, Membrane-Forming: Provide warranty to cover cost of flooring delamination failures for 10 years.
   1. Include cost of repair or removal of failed flooring, remediation with a moisture vapor impermeable surface coating, and replacement of flooring with comparable flooring system.

D. Moisture Emission-Reducing Curing and Sealing Compound, Penetrating: Provide non-prorated warranty to cover cost of flooring delamination failures for 20 years.
   1. Include cost of repair or removal of failed flooring, remediation with a moisture vapor impermeable surface coating, and replacement of flooring with comparable flooring system.

PART 2 PRODUCTS

2.1 FORMWORK

A. Formwork Design and Construction: Comply with guidelines of ACI 347R to provide formwork that will produce concrete complying with tolerances of ACI 117.

B. Form Materials: Contractor's choice of standard products with sufficient strength to withstand hydrostatic head without distortion in excess of permitted tolerances.
   1. Form Facing for Exposed Finish Concrete: Contractor's choice of materials that will provide smooth, stain-free final appearance.
   2. Earth Cuts: Do not use earth cuts as forms for vertical surfaces. Natural rock formations that maintain a stable vertical edge may be used as side forms.
   3. Form Coating: Release agent that will not adversely affect concrete or interfere with application of coatings.
   4. Form Ties: Cone snap type that will leave no metal within 1-1/2 inches of concrete surface.

2.2 REINFORCEMENT MATERIALS

A. Reinforcing Steel: ASTM A615/A615M, Grade 60 (60,000 psi). Reinforcing to be welded shall conform to ASTM A706/A706M, Grade 60 (60,000 psi).
   1. Type: Deformed billet-steel bars.
   2. Finish: Unfinished, unless otherwise indicated.
   3. Finish: Galvanized in accordance with ASTM A767/A767M, Class I, unless otherwise indicated.

B. Steel Welded Wire Reinforcement (WWR): Galvanized, plain type, ASTM A1064/A1064M.
   1. Form: Flat Sheets.
   2. WWR Style: 6 x 6-W1.4 x W1.4.

C. Reinforcement Accessories:
   1. Tie Wire: Annealed, minimum 16 gage, 0.0508 inch.
   2. Chairs, Bolsters, Bar Supports, Spacers: Sized and shaped for adequate support of reinforcement during concrete placement.
   3. Provide stainless steel, galvanized, plastic, or plastic coated steel components for placement within 1-1/2 inches of weathering surfaces.

2.3 CONCRETE MATERIALS

A. Cement: ASTM C150/C150M, Type II - Portland type.

B. Fine and Coarse Aggregates: ASTM C33/C33M.
   1. Acquire aggregates for entire project from same source.

C. Lightweight Aggregate: ASTM C330/C330M.

D. Fly Ash: ASTM C618, Class C or F.

E. Calcined Pozzolan: ASTM C618, Class N.

F. Silica Fume: ASTM C1240, proportioned in accordance with ACI 211.1.

G. Concrete Waterproofing: Xypex: Xypex C1000.

2.4 ADMIXTURES

A. Do not use chemicals that will result in soluble chloride ions in excess of 0.1 percent by weight of cement.

B. Air Entrainment Admixture: ASTM C260/C260M.

C. High Range Water Reducing and Retarding Admixture: ASTM C494/C494M Type G.

D. High Range Water Reducing Admixture: ASTM C494/C494M Type F.

E. Water Reducing and Accelerating Admixture: ASTM C494/C494M Type E.

F. Water Reducing and Retarding Admixture: ASTM C494/C494M Type D.

G. Accelerating Admixture: ASTM C494/C494M Type C.
   1. Manufacturers:
      a. W. R. Meadows, Inc; Hydraset: www.wrmeadows.com/#sle.

H. Retarding Admixture: ASTM C494/C494M Type B.

I. Water Reducing Admixture: ASTM C494/C494M Type A.
   1. Manufacturers:
      a. Euclid Chemical Company; EUCON NW: www.euclidchemical.com/#sle.

J. Shrinkage Reducing Admixture:
   1. ASTM C494/C494M, Type S.
   2. Manufacturers:
      a. Euclid Chemical Company; Eucon SRA Floor: www.euclidchemical.com/#sle.
      b. Euclid Chemical Company; Eucon SRA-XT: www.euclidchemical.com/#sle.
      c. GCP Applied Technologies; Eclipse 4500: www.gcpat.com/#sle.

K. Corrosion Inhibiting Admixture:
   1. ASTM C494/C494M, Type C.
   2. ASTM C1582/C1582M.

L. Microbiologically-Induced Corrosion Inhibiting Admixture: Resists growth of bacteria and fungi on or inside concrete.
   1. Manufacturers:
      a. ConShield Technologies, Inc; ConShield HD: www.conshield.com/#sle.

M. Moisture Vapor Reduction Admixture (MVRA): Liquid, inorganic admixture free of volatile organic compounds (VOCs) and formulated to close capillary systems formed during curing to reduce moisture vapor emission and transmission with no adverse effect on concrete properties or finish flooring.
   1. Provide admixture in slabs to receive adhesively applied flooring.

N. Waterproofing Admixture: Admixture formulated to reduce permeability to liquid water, with no adverse effect on concrete properties.
   1. Admixture Composition: Crystalline, functioning by growth of crystals in capillary pores.
   2. Permeability of Cured Concrete: No measurable leakage when tested in accordance with COE CRD-C 48 at 200 psi; provide test reports.
   3. Products:

a. Xypex Chemical Corporation: www.xypex.com.

O. Waterproofing Admixture System: Admixture formulated to reduce permeability to liquid water, with no adverse effect on concrete properties; includes manufacturer-provided field services and performance warranty.

P. Integral Hardening Admixture: Dry powder added to concrete during batching.

2.5 ACCESSORY MATERIALS

A. Underslab Vapor Retarder:
1. Sheet Material: ASTM E1745, Class A; stated by manufacturer as suitable for installation in contact with soil or granular fill under concrete slabs. Single ply polyethylene is prohibited.
2. Accessory Products: Vapor retarder manufacturer's recommended tape, adhesive, mastic, prefabricated boots, etc., for sealing seams and penetrations.
3. Manufacturers:
a. Basis of Design :Stego Industries, LLC; Stego Wrap Vapor Barrier 10-mil (Class A):: www.stegoindustries.com/#sle.
b. Poly-America; Husky Yellow Guard 10-mil Vapor Barrier: www.yellowguard.com/#sle.
c. ISI Building Products; Viper VaporCheck II 15-mil (Class A): www.isibp.com/#sle.

B. Non-Shrink Cementitious Grout: Premixed compound consisting of non-metallic aggregate, cement, water reducing and plasticizing agents.
1. Grout: Comply with ASTM C1107/C1107M.
2. Height Change, Plastic State; when tested in accordance with ASTM C827/C827M:
a. Maximum: Plus 0.06 percent.
b. Minimum: Plus 0.02 percent.
3. Minimum Compressive Strength at 24 Hours, ASTM C109/C109M: 4,500 pounds per square inch.
4. Minimum Compressive Strength at 28 Days, ASTM C109/C109M: 7,000 pounds per square inch (48 MPa) above fluid consistency.
5. Low-Slump, Dry Pack Products:

C. Non-Shrink Epoxy Grout: Moisture-insensitive, two-part; consisting of epoxy resin, non-metallic aggregate, and activator.
1. Composition: High solids content material exhibiting positive expansion when tested in accordance with ASTM C827/C827M.
a. Maximum Height Change: 0.06 percent.
b. Minimum Height Change: 0.02 percent.
2. Minimum Compressive Strength at 7 days, ASTM C579: 11,000 pounds per square inch.
3. Minimum Compressive Strength at 7 days, ASTM D695: 11,000 pounds per square inch (82.7 MPa).
4. Manufacturers:
a. Sika.
b. Euclid.
c. Or Equal.

2.6 BONDING AND JOINTING PRODUCTS

A. Latex Bonding Agent: Non-redispersable acrylic latex, complying with ASTM C1059/C1059M, Type II.

B. Epoxy Bonding System:
   1. Complying with ASTM C881/C881M and of Type required for specific application.

C. Waterstops: Rubber, complying with COE CRD-C 513.
   1. Configuration: As indicated on drawings.
   2. Size: As indicated on drawings.

D. Waterstops: PVC, complying with COE CRD-C 572.
   1. Configuration: As indicated on drawings.
   2. Size: As indicated on drawings.

E. Waterstops: Synthetic rubber; swells to 1000 percent of original size in clean water.
   1. Configuration: As indicated on drawings.
   2. Size: As indicated on drawings.

F. Reglets: Formed steel sheet, galvanized, with temporary filler to prevent concrete intrusion during placement.
   1. Size: As indicated on drawings.
   2. Size: 1/2 inch (13 mm) throat, 1/2 inch (13 mm) deep.

G. Slab Isolation Joint Filler: 1/2 inch (13 mm) thick, height equal to slab thickness, with removable top section that will form 1/2 inch (13 mm) deep sealant pocket after removal.
   1. Material: ASTM D1751, cellulose fiber.

H. Slab Control Joint Devices: Saw joints and doweled joints per structural drawings.

I. Slab Construction Joint Devices: Diamond dowel plates per structural drawings.

2.7 CURING MATERIALS

A. Evaporation Reducer: Liquid thin-film-forming compound that reduces rapid moisture loss caused by high temperature, low humidity, and high winds; intended for application immediately after concrete placement.

B. Curing Compound, Naturally Dissipating: Clear, water-based, liquid membrane-forming compound; complying with ASTM C309.
   1. Application: Use at all concrete slabs.
   2. Product dissipates within 4 to 6 weeks.
   3. VOC Content: Zero.
   4. Compressive Strength of Treated Concrete: Equal to or greater than strength after 28-day water cure when tested according to ASTM C39/C39M.
   5. Products: VC-5 by Sinak Corporation or an approved equal.

C. Moisture-Retaining Sheet: ASTM C171.
   1. White-burlap-polyethylene sheet, weighing not less than 3.8 ounces per square yard (1.71 kg/sq m).

D. Water: Potable, not detrimental to concrete.

2.8 CONCRETE MIX DESIGN

A. Proportioning Normal Weight Concrete: Comply with ACI 211.1 recommendations.

1. Replace as much Portland cement as possible with fly ash, ground granulated blast furnace slag, silica fume, or rice hull ash as is consistent with ACI recommendations.

B. Proportioning Structural Lightweight Concrete: Comply with ACI 211.2 recommendations.
   1. Replace as much Portland cement as possible with fly ash, ground granulated blast furnace slag, silica fume, or rice hull ash as is consistent with ACI recommendations.

C. Concrete Strength: Establish required average strength for each type of concrete on the basis of field experience or trial mixtures, as specified in ACI 301.
   1. For trial mixtures method, employ independent testing agency acceptable to Structural Engineer for preparing and reporting proposed mix designs.

D. Admixtures: Add acceptable admixtures as recommended in ACI 211.1 and at rates recommended or required by manufacturer.

E. Normal Weight Concrete:
   1. Compressive Strength, when tested in accordance with ASTM C39/C39M at 28 days: See structural drawings notes section D.
   2. Fly Ash Content: Maximum 20 percent of cementitious materials by weight.
   3. Water-Cement Ratio: Maximum 0.45 percent by weight except for slab on grade the maximum shall be 0.50.
   4. Total Air Content: 5% +/- 1% for footings and 6% +/- 1% for foundation walls and exterior concrete, determined in accordance with ASTM C173/C173M.
   5. Maximum Slump: 3 inches, additional workability may be achieved with an approved admixture that does not promote shrinkage of the concrete.
   6. Maximum Aggregate Size: 3/4 inch.
   7. Add Xypex C1000 at 12 lbs/cubic yard to concrete at elevator pit floor and walls (coordinate with Architect to potentially remove water proofing).

2.9 MIXING

A. On Project Site: Mix in drum type batch mixer, complying with ASTM C685/C685M. Mix each batch not less than 1-1/2 minutes and not more than 5 minutes.

B. Transit Mixers: Comply with ASTM C94/C94M.

C. Adding Water: Do not add water on site.

PART 3 EXECUTION

3.1 EXAMINATION

A. Verify lines, levels, and dimensions before proceeding with work of this section.

3.2 PREPARATION

A. Formwork: Comply with requirements of ACI 301. Design and fabricate forms to support all applied loads until concrete is cured, and for easy removal without damage to concrete.

B. Verify that forms are clean and free of rust before applying release agent.

C. Coordinate placement of embedded items with erection of concrete formwork and placement of form accessories.

D. Where new concrete is to be bonded to previously placed concrete, prepare existing surface by cleaning and applying bonding agent according to bonding agent manufacturer's instructions.
   1. Use epoxy bonding system for bonding to damp surfaces, for structural load-bearing applications, and where curing under humid conditions is required.
   2. Use latex bonding agent only for non-load-bearing applications.

E. Where new concrete with integral waterproofing is to be bonded to previously placed concrete, prepare surfaces to be treated in accordance with waterproofing manufacturer's instructions. Saturate cold joint surface with clean water, and remove excess water before application of coat of waterproofing admixture slurry. Apply slurry coat uniformly with semi-stiff bristle brush at rate recommended by waterproofing manufacturer.

3.3 UNDERSLAB VAPOR BARRIER:

A. Interior Slabs on Grade: Install vapor retarder under interior slabs on grade at locations where moisture sensitive flooring will be placed. Lap joints minimum 6 inches (150 mm). Seal joints, seams and penetrations watertight with manufacturer's recommended products and follow manufacturer's written instructions. Repair damaged vapor retarder before covering.
   1. Vapor Retarder Over Granular Fill: Install compactible granular fill before placing vapor retarder as indicated on drawings. Do not use sand.

B. Unroll vapor barrier with the longest dimension parallel with the direction of the concrete placement and face laps away from the expected direction of the placement whenever possible.

C. Place vapor retarder over subbase immediately prior to placing of slabs on grade. Install vapor retarder in accordance with ASTM E1643 and Manufacturer's printed instructions. Vapor retarder shall be continuous over entire floor area (where determined necessary due to floor finishes) and turned up a minimum of 2 inches at perimeter walls and penetrations. Tears, punctures and penetrations shall be taped to maintain the moisture vapor resistance integrity of vapor retarder.
   1. Repair damaged areas by cutting patches of vapor barrier, overlapping damaged area 6 inches and taping all sides with tape.

D. Coordinate placement of embedded items with erection of concrete formwork and placement of form accessories.

E. Extend vapor barrier to the perimeter of the slab. If practicable, terminate it at the top of the slab, otherwise (a) at a point acceptable to the structural engineer or (b) where obstructed by impediments, such as dowels, waterstops, or any other site condition requiring early termination of the vapor barrier. At the point of termination, seal vapor barrier to the foundation wall, grade beam or slab itself.

F. Extend vapor barrier over footings and grade beams to a distance acceptable to the Structural Engineer or stop at impediments such as dowels and waterstops.

G. Seal vapor barrier to foundation wall, grade beam, or slab at an elevation consistent with the top of the slab or terminate at impediments such as waterstops or dowels.

H. Overlap joints 6 inches and seal with manufacturer’s seam tape.

I. No penetration of the vapor barrier is allowed except for reinforcing steel and permanent utilities.

J. Repair damaged areas by cutting patches of vapor barrier, overlapping damaged area 6 inches and taping all sides with tape.

3.4 INSTALLING REINFORCEMENT AND OTHER EMBEDDED ITEMS

A. Comply with requirements of ACI 301. Clean reinforcement of loose rust and mill scale, and accurately position, support, and secure in place to achieve not less than minimum concrete coverage required for protection as specified on structural drawings.

B. Install welded wire reinforcement in maximum possible lengths, and offset end laps in both directions. Splice laps with tie wire.

C. Verify that anchors, seats, plates, reinforcement and other items to be cast into concrete are accurately placed, positioned securely, and will not interfere with concrete placement.

3.5 PLACING CONCRETE

A. Place concrete in accordance with ACI 304R.

B. Place concrete for floor slabs in accordance with ACI 302.1R.

C. Notify Architect and Structural Engineer not less than 24 hours prior to commencement of placement operations.

D. Maintain records of concrete placement. Record date, location, quantity, air temperature, and test samples taken.

E. Ensure reinforcement, inserts, waterstops, embedded parts, and formed construction joint devices will not be disturbed during concrete placement.

F. Place concrete continuously without construction (cold) joints wherever possible; where construction joints are necessary, before next placement prepare joint surface by removing laitance and exposing the sand and sound surface mortar, by sandblasting or high-pressure water jetting.

G. Finish floors level and flat, unless otherwise indicated, within the tolerances specified below.

3.6 SLAB JOINTING

A. Locate joints as indicated on drawings.

B. Anchor joint fillers and devices to prevent movement during concrete placement.

C. Isolation Joints: Use preformed joint filler with removable top section for joint sealant, total height equal to thickness of slab, set flush with top of slab.
   1. Install wherever necessary to separate slab from other building members, including columns, walls, equipment foundations, footings, stairs, manholes, sumps, and drains.

D. Load Transfer Construction and Control Joints: Install load transfer devices as indicated on structural drawings; saw cut joint at surface as indicated on structural drawings for control joints. Use slab joint protectors at intersections of all sawcut joints to prevent cross direction cut from spalling adjacent slab joint corner.

E. Saw Cut Contraction Joints: Saw cut joints before concrete begins to cool, immediately following finishing operations; use 3/16 inch thick blade and cut at least 1 inch deep but not less than one quarter (1/4) the depth of the slab.

F. Construction Joints: Diamond dowels per structural drawings.

G. Reinforcing shall be continuous through construction joints, Provide shear keys as detailed.

3.7 FLOOR FLATNESS AND LEVELNESS TOLERANCES

A. An independent testing agency, as specified in Section 014000, will inspect finished slabs for compliance with specified tolerances.

B. Maximum Variation of Surface Flatness:
   1. Exposed Concrete Floors: See below.
   2. Under All Flooring (covered slabs): F(F) of 35; F(L) of 25.

C. Correct the slab surface if tolerances are less than specified.

D. Minimum F(F) Floor Flatness and F(L) Floor Levelness Values:
   1. Exposed to View and Foot Traffic: F(F) of 50; F(L) of 40, on-grade.

E. Measure F(F) Floor Flatness and F(L) Floor Levelness in accordance with [HYPERLINK TEXT] ([HYPERLINK TEXT]), within 72 hours after slab installation; report both composite overall values and local values for each measured section.

F. Correct the slab surface if composite overall value is less than specified and if local value is less than two-thirds of specified value or less than F(F) 13/F(L) 10.

G. Correct defects by grinding or by removal and replacement of the defective work. Areas requiring corrective work will be identified. Re-measure corrected areas by the same process.

3.8 CONCRETE FINISHING

A. Repair surface defects, including tie holes, immediately after removing formwork.

B. Unexposed Form Finish: Rub down or chip off fins or other raised areas 1/4 inch (6 mm) or more in height. Rough wood float finish.

C. Exposed Form Finish: Rub down or chip off and smooth fins or other raised areas 1/4 inch (6 mm) or more in height. Provide finish as follows:
   1. Smooth Rubbed Finish: Wet concrete and rub with carborundum brick or other abrasive, not more than 24 hours after form removal.
   2. Cork Floated Finish: Immediately after form removal, apply grout with trowel or firm rubber float; compress grout with low-speed grinder, and apply final texture with cork float.

D. Concrete Slabs on Grade: Finish to requirements of ACI 302.1R, and as follows:
   1. All slabs-on-grade shall have a monolithic placement. Screed concrete to accurate level grades and float to a uniform level surface.
   2. Steel trowel with self-propelled troweling machines to a smooth, dense, hard finish. Do not burnish trowel or over-trowel surfaces with hardener. Surface shall be free from depressions, trowel marks, scale, and foreign deposits.
   3. Delay final troweling until after sheen has completely disappeared. Dusting will not be permitted under any circumstances.

4. Depress slabs where shown on Drawings. Coordinate with gym flooring.

E. Chemical Hardener: See Section 033511.

F. In areas with floor drains, maintain floor elevation at walls; pitch surfaces uniformly to drains at 1:100 nominal.

G. Concrete Polishing: See Section 033511.

3.9 CURING AND PROTECTION

A. Comply with requirements of ACI 308R. Immediately after placement, protect concrete from premature drying, excessively hot or cold temperatures, and mechanical injury.

B. Maintain concrete with minimal moisture loss at relatively constant temperature for period necessary for hydration of cement and hardening of concrete.
1. Normal concrete: Not less than seven days.
2. High early strength concrete: Not less than four days.

C. Formed Surfaces: Cure by moist curing with forms in place for full curing period.

D. Interior Floor Slabs – Slabs on Grade and Metal Deck:
1. Apply one coat of VC-5 by Sinak (or an approved equal) as soon as permitted by the manufacturer recommendations. Apply at a rate of 300 sf/gallon or as recommended by the manufacturer. Apply a second coat (perpendicular to the first coat to create a crosshatch pattern) immediately after the first coat is dry to the touch, consult manufacturer for all recommendations prior to product installation.

3.10 FOUNDATIONS FOR POLES

A. Concrete Pole Foundations:
1. Foundations shall be cast-in-place exterior concrete, having 4500 psi minimum, 28-day compressive strength.
2. Foundations shall be as detailed on the structural drawings.

B. Rub-finish and round all above-grade concrete edges to approximately 6 mm (0.25-inch) radius.

C. Anchor bolt assemblies and reinforcing of concrete foundations shall be as shown on the drawings. Anchor bolts shall be in a welded cage or properly positioned by the tiewire to stirrups.
1. Set anchor bolts according to anchor-bolt templates furnished by pole manufacturer.

D. Prior to concrete pour, install electrode per Section 260526 - Grounding and Bonding for Electrical Systems.

3.11 FIELD QUALITY CONTROL

A. An independent testing agency will perform field quality control tests, as specified on structural drawings.

B. Provide free access to concrete operations at project site and cooperate with appointed firm.

C. Submit proposed mix design of each class of concrete to inspection and testing firm for review prior to commencement of concrete operations.

D. Tests of concrete and concrete materials may be performed at any time to ensure compliance with specified requirements, refer toASTM C172.

E. Compressive Strength Tests: ASTM C39/C39M & ASTM C31/C31M, for each test, mold and cure four 6”x12” or five 4”x8” concrete test cylinders. Samples shall be obtained for each concrete class or mixture at least one per day, at least for each 150 cubic yards of concrete placed, and at least for each 5000 square feet of surface area for slabs or walls.

F. Take at least two additional 6”x12” or three 4”x8” test cylinders during cold weather concreting, cured on job site under same conditions as concrete they represent. Tested in accordance with and Field curing procedure in accordance with ASTM C39/C39M & ASTM C31/C31M, respectively.

G. Prior to the addition of plasticizer, perform one slump test for each set of test cylinders taken, following procedures of ASTM C143/C143M.

H. Entrained Air Tests: Freshly mixed concrete shall be tested for air content in accordance with ASTM C 231 and reported with compression test reports. Air, when required, is to be per section 2.8. Test air content for each exterior flatwork pour and any time the concrete mix is air-entrained.

I. Unit Weight and Yield Tests: ASTM C138/C138M, Perform unit weight test and yield test for each set of specimens obtained.

3.12 DEFECTIVE CONCRETE

A. Test Results: The testing agency shall report test results in writing to Architect and Contractor within 24 hours of test.

B. Defective Concrete: Concrete not complying with required lines, details, dimensions, tolerances or specified requirements in ACI, the specification or the contract documents..

C. Repair or replacement of defective concrete will be determined by the Architect and Structural Engineer. The cost of repair or replacement or additional testing shall be borne by Contractor when defective concrete is identified.

D. Do not patch, fill, touch-up, repair, or replace exposed concrete except upon express direction of Architect and Structural Engineer for each individual area.

3.13 PROTECTION

A. Do not permit traffic over unprotected concrete floor surface until fully cured.

END OF SECTION

SECTION 033000 - CAST-IN-PLACE CONCRETE

PART 1 GENERAL

1.1 SECTION INCLUDES

A. Concrete formwork.

B. Concrete for composite floor construction.

C. Elevated concrete slabs.

D. Floors and slabs on grade.

E. Concrete elevator pit and foundation walls.

F. Underslab Vapor Retarder.

G. Concrete reinforcement.

H. Joint devices associated with concrete work.

I. Miscellaneous concrete elements, including equipment pads, equipment pits, light pole bases, and flagpole bases.

J. Concrete curing.

1.2 RELATED REQUIREMENTS

A. Section 033511 - Concrete Floor Finishes: Densifiers, hardeners, applied coatings, and polishing.

B. Section 055100 - Metal Stairs: Concrete Stair Treads.

C. Section 072100 - Building Insulation: Underslab and perimeter insulation.

D. Section 079200 - Joint Sealants: Products and installation for sealants and joint fillers for saw cut joints and isolation joints in slabs.

1.3 REFERENCE STANDARDS

A. ACI 117 - Specification for Tolerances for Concrete Construction and Materials; 2010 (Reapproved 2015).

B. ACI 211.1 - Standard Practice for Selecting Proportions for Normal, Heavyweight, and Mass Concrete; 1991 (Reapproved 2009).

C. ACI 211.2 - Standard Practice for Selecting Proportions for Structural Lightweight Concrete; 1998 (Reapproved 2004).

D. ACI 301 - Specifications for Concrete Construction; 2020.

E. ACI 302.1R - Guide to Concrete Floor and Slab Construction; 2015.

F. ACI 304R - Guide for Measuring, Mixing, Transporting, and Placing Concrete; 2000 (Reapproved 2009).

G. ACI 305R - Guide to Hot Weather Concreting; 2020.

H. ACI 306R - Guide to Cold Weather Concreting; 2016.

I. ACI 308R - Guide to External Curing of Concrete; 2016.

J. ACI 318 - Building Code Requirements for Structural Concrete; 2019, with Errata (2021).

K. ACI 347R - Guide to Formwork for Concrete; 2014, with Errata (2017).

L. ASTM A615/A615M - Standard Specification for Deformed and Plain Carbon-Steel Bars for Concrete Reinforcement; 2020.

M. ASTM A767/A767M - Standard Specification for Zinc-Coated (Galvanized) Steel Bars for Concrete Reinforcement; 2019.

N. ASTM A1064/A1064M - Standard Specification for Carbon-Steel Wire and Welded Wire Reinforcement, Plain and Deformed, for Concrete; 2018a.

O. ASTM C31/C31M - Standard Practice for Making and Curing Concrete Test Specimens in the Field; 2021a.

P. ASTM C33/C33M - Standard Specification for Concrete Aggregates; 2018.

Q. ASTM C39/C39M - Standard Test Method for Compressive Strength of Cylindrical Concrete Specimens; 2021.

R. ASTM C94/C94M - Standard Specification for Ready-Mixed Concrete; 2021b.

S. ASTM C109/C109M - Standard Test Method for Compressive Strength of Hydraulic Cement Mortars (Using 2-in. or [50 mm] Cube Specimens); 2021.

T. ASTM C143/C143M - Standard Test Method for Slump of Hydraulic-Cement Concrete; 2020.

U. ASTM C150/C150M - Standard Specification for Portland Cement; 2021.

V. ASTM C171 - Standard Specification for Sheet Materials for Curing Concrete; 2020.

W. ASTM C172/C172M - Standard Practice for Sampling Freshly Mixed Concrete; 2017.

X. ASTM C173/C173M - Standard Test Method for Air Content of Freshly Mixed Concrete by the Volumetric Method; 2016.

Y. ASTM C260/C260M - Standard Specification for Air-Entraining Admixtures for Concrete; 2010a (Reapproved 2016).

Z. ASTM C309 - Standard Specification for Liquid Membrane-Forming Compounds for Curing Concrete; 2019.

AA. ASTM C330/C330M - Standard Specification for Lightweight Aggregates for Structural Concrete; 2017a.

AB. ASTM C494/C494M - Standard Specification for Chemical Admixtures for Concrete; 2019.

AC. ASTM C579 - Standard Test Methods for Compressive Strength of Chemical-Resistant Mortars, Grouts, Monolithic Surfacings, and Polymer Concretes; 2018.

AD. ASTM C618 - Standard Specification for Coal Fly Ash and Raw or Calcined Natural Pozzolan for Use in Concrete; 2019.

AE. ASTM C685/C685M - Standard Specification for Concrete Made by Volumetric Batching and Continuous Mixing; 2017.

AF. ASTM C827/C827M - Standard Test Method for Change in Height at Early Ages of Cylindrical Specimens of Cementitious Mixtures; 2016.

AG. ASTM C845/C845M - Standard Specification for Expansive Hydraulic Cement; 2018.

AH. ASTM C881/C881M - Standard Specification for Epoxy-Resin-Base Bonding Systems for Concrete; 2020a.

AI. ASTM C1059/C1059M - Standard Specification for Latex Agents for Bonding Fresh to Hardened Concrete; 2021.

AJ. ASTM C1107/C1107M - Standard Specification for Packaged Dry, Hydraulic-Cement Grout (Nonshrink); 2020.

AK. ASTM C1240 - Standard Specification for Silica Fume Used in Cementitious Mixtures; 2020.

AL. ASTM C1315 - Standard Specification for Liquid Membrane-Forming Compounds Having Special Properties for Curing and Sealing Concrete; 2019.

AM. ASTM C1582/C1582M - Standard Specification for Admixtures to Inhibit Chloride-Induced Corrosion of Reinforcing Steel in Concrete; 2011, with Editorial Revision (2017).

AN. ASTM D695 - Standard Test Method for Compressive Properties of Rigid Plastics; 2015.

AO. ASTM D1751 - Standard Specification for Preformed Expansion Joint Filler for Concrete Paving and Structural Construction (Nonextruding and Resilient Bituminous Types); 2018.

AP. ASTM D2103 - Standard Specification for Polyethylene Film and Sheeting; 2015.

AQ. ASTM E1155 - Standard Test Method for Determining FF Floor Flatness and FL Floor Levelness Numbers; 2020.

AR. ASTM E1643 - Standard Practice for Selection, Design, Installation and Inspection of Water Vapor Retarders Used in Contact with Earth or Granular Fill Under Concrete Slabs; 2018a.

AS. ASTM E1745 - Standard Specification for Plastic Water Vapor Retarders Used in Contact with Soil or Granular Fill under Concrete Slabs; 2017.

AT. COE CRD-C 48 - Handbook for Concrete and Cement Standard Test Method for Water Permeability of Concrete; 1992.

AU. COE CRD-C 513 - Handbook for Concrete and Cement Corps of Engineers Specifications for Rubber Waterstops; 1974.

AV. COE CRD-C 572 - Handbook for Concrete and Cement Corps of Engineers Specifications for Polyvinylchloride Waterstop; 1974.

AW. ICC-ES AC380 - Acceptance Criteria for Termite Physical Barrier Systems; 2014, with Editorial Revision (2017).

AX. ICC (IBC) - 2018 - International Building Code; 2018.
1. With Northern Nevada Amendments

1.4 SUBMITTALS

A. See Section 013300 - Submittal Requirements, for submittal procedures.

B. Product Data: Submit manufacturers' data on manufactured products showing compliance with specified requirements and installation instructions.
   1. For curing compounds, provide data on method of removal in the event of incompatibility with floor covering adhesives.

C. Mix Design: Submit proposed concrete mix design.
   1. Indicate proposed mix design complies with requirements of ACI 301, Section 4 - Concrete Mixtures.
   2. Indicate proposed mix design complies with requirements of ACI 318, Chapter 5 - Concrete Quality, Mixing and Placing.

D. Samples: Submit samples of underslab vapor retarder to be used.

E. Test Reports: Submit report for each test or series of tests specified.

F. Test Reports: Submit termite-resistant sheet manufacturer's summary of independent laboratory and field testing for effectiveness in subterranean termite exclusion.

G. Project Record Documents: Accurately record actual locations of embedded utilities and components that will be concealed from view upon completion of concrete work.

H. Warranty: Submit manufacturer warranty and ensure forms have been completed in Owner's name and registered with manufacturer.

1.5 QUALITY ASSURANCE

A. Perform work of this section in accordance with ACI 301 and ACI 318.

B. Follow recommendations of ACI 305R when concreting during hot weather.

C. Follow recommendations of ACI 306R when concreting during cold weather.

1.6 WARRANTY

A. See Section 017000 - Contract Closeout, for additional warranty requirements.

B. Slabs with Moisture Vapor Reducing Admixture (MVRA): Provide warranty to cover cost of flooring failures due to moisture migration from slabs for ten years.
   1. Include cost of repair or removal of failed flooring, placement of topical moisture remediation system, and replacement of flooring with comparable flooring system.

C. Moisture Emission-Reducing Curing and Sealing Compound, Membrane-Forming: Provide warranty to cover cost of flooring delamination failures for 10 years.
   1. Include cost of repair or removal of failed flooring, remediation with a moisture vapor impermeable surface coating, and replacement of flooring with comparable flooring system.

D. Moisture Emission-Reducing Curing and Sealing Compound, Penetrating: Provide non-prorated warranty to cover cost of flooring delamination failures for 20 years.
   1. Include cost of repair or removal of failed flooring, remediation with a moisture vapor impermeable surface coating, and replacement of flooring with comparable flooring system.

PART 2 PRODUCTS

2.1 FORMWORK

A. Formwork Design and Construction: Comply with guidelines of ACI 347R to provide formwork that will produce concrete complying with tolerances of ACI 117.

B. Form Materials: Contractor's choice of standard products with sufficient strength to withstand hydrostatic head without distortion in excess of permitted tolerances.
   1. Form Facing for Exposed Finish Concrete: Contractor's choice of materials that will provide smooth, stain-free final appearance.
   2. Earth Cuts: Do not use earth cuts as forms for vertical surfaces. Natural rock formations that maintain a stable vertical edge may be used as side forms.
   3. Form Coating: Release agent that will not adversely affect concrete or interfere with application of coatings.
   4. Form Ties: Cone snap type that will leave no metal within 1-1/2 inches of concrete surface.

2.2 REINFORCEMENT MATERIALS

A. Reinforcing Steel: ASTM A615/A615M, Grade 60 (60,000 psi). Reinforcing to be welded shall conform to ASTM A706/A706M, Grade 60 (60,000 psi).
   1. Type: Deformed billet-steel bars.
   2. Finish: Unfinished, unless otherwise indicated.
   3. Finish: Galvanized in accordance with ASTM A767/A767M, Class I, unless otherwise indicated.

B. Steel Welded Wire Reinforcement (WWR): Galvanized, plain type, ASTM A1064/A1064M.
   1. Form: Flat Sheets.
   2. WWR Style: 6 x 6-W1.4 x W1.4.

C. Reinforcement Accessories:
   1. Tie Wire: Annealed, minimum 16 gage, 0.0508 inch.
   2. Chairs, Bolsters, Bar Supports, Spacers: Sized and shaped for adequate support of reinforcement during concrete placement.
   3. Provide stainless steel, galvanized, plastic, or plastic coated steel components for placement within 1-1/2 inches of weathering surfaces.

2.3 CONCRETE MATERIALS

A. Cement: ASTM C150/C150M, Type II - Portland type.

B. Fine and Coarse Aggregates: ASTM C33/C33M.
   1. Acquire aggregates for entire project from same source.

C. Lightweight Aggregate: ASTM C330/C330M.

D. Fly Ash: ASTM C618, Class C or F.

E. Calcined Pozzolan: ASTM C618, Class N.

F. Silica Fume: ASTM C1240, proportioned in accordance with ACI 211.1.

G. Concrete Waterproofing: Xypex: Xypex C1000.

2.4 ADMIXTURES

A. Do not use chemicals that will result in soluble chloride ions in excess of 0.1 percent by weight of cement.

B. Air Entrainment Admixture: ASTM C260/C260M.

C. High Range Water Reducing and Retarding Admixture: ASTM C494/C494M Type G.

D. High Range Water Reducing Admixture: ASTM C494/C494M Type F.

E. Water Reducing and Accelerating Admixture: ASTM C494/C494M Type E.

F. Water Reducing and Retarding Admixture: ASTM C494/C494M Type D.

G. Accelerating Admixture: ASTM C494/C494M Type C.
   1. Manufacturers:
      a. W. R. Meadows, Inc; Hydraset: www.wrmeadows.com/#sle.

H. Retarding Admixture: ASTM C494/C494M Type B.

I. Water Reducing Admixture: ASTM C494/C494M Type A.
   1. Manufacturers:
      a. Euclid Chemical Company; EUCON NW: www.euclidchemical.com/#sle.

J. Shrinkage Reducing Admixture:
   1. ASTM C494/C494M, Type S.
   2. Manufacturers:
      a. Euclid Chemical Company; Eucon SRA Floor: www.euclidchemical.com/#sle.
      b. Euclid Chemical Company; Eucon SRA-XT: www.euclidchemical.com/#sle.
      c. GCP Applied Technologies; Eclipse 4500: www.gcpat.com/#sle.

K. Corrosion Inhibiting Admixture:
   1. ASTM C494/C494M, Type C.
   2. ASTM C1582/C1582M.

L. Microbiologically-Induced Corrosion Inhibiting Admixture: Resists growth of bacteria and fungi on or inside concrete.
   1. Manufacturers:
      a. ConShield Technologies, Inc; ConShield HD: www.conshield.com/#sle.

M. Moisture Vapor Reduction Admixture (MVRA): Liquid, inorganic admixture free of volatile organic compounds (VOCs) and formulated to close capillary systems formed during curing to reduce moisture vapor emission and transmission with no adverse effect on concrete properties or finish flooring.
   1. Provide admixture in slabs to receive adhesively applied flooring.

N. Waterproofing Admixture: Admixture formulated to reduce permeability to liquid water, with no adverse effect on concrete properties.
   1. Admixture Composition: Crystalline, functioning by growth of crystals in capillary pores.
   2. Permeability of Cured Concrete: No measurable leakage when tested in accordance with COE CRD-C 48 at 200 psi; provide test reports.
   3. Products:

a. Xypex Chemical Corporation: www.xypex.com.

O. Waterproofing Admixture System: Admixture formulated to reduce permeability to liquid water, with no adverse effect on concrete properties; includes manufacturer-provided field services and performance warranty.

P. Integral Hardening Admixture: Dry powder added to concrete during batching.

2.5 ACCESSORY MATERIALS

A. Underslab Vapor Retarder:
1. Sheet Material: ASTM E1745, Class A; stated by manufacturer as suitable for installation in contact with soil or granular fill under concrete slabs. Single ply polyethylene is prohibited.
2. Accessory Products: Vapor retarder manufacturer's recommended tape, adhesive, mastic, prefabricated boots, etc., for sealing seams and penetrations.
3. Manufacturers:
a. Basis of Design :Stego Industries, LLC; Stego Wrap Vapor Barrier 10-mil (Class A):: www.stegoindustries.com/#sle.
b. Poly-America; Husky Yellow Guard 10-mil Vapor Barrier: www.yellowguard.com/#sle.
c. ISI Building Products; Viper VaporCheck II 15-mil (Class A): www.isibp.com/#sle.

B. Non-Shrink Cementitious Grout: Premixed compound consisting of non-metallic aggregate, cement, water reducing and plasticizing agents.
1. Grout: Comply with ASTM C1107/C1107M.
2. Height Change, Plastic State; when tested in accordance with ASTM C827/C827M:
a. Maximum: Plus 0.06 percent.
b. Minimum: Plus 0.02 percent.
3. Minimum Compressive Strength at 24 Hours, ASTM C109/C109M: 4,500 pounds per square inch.
4. Minimum Compressive Strength at 28 Days, ASTM C109/C109M: 7,000 pounds per square inch (48 MPa) above fluid consistency.
5. Low-Slump, Dry Pack Products:

C. Non-Shrink Epoxy Grout: Moisture-insensitive, two-part; consisting of epoxy resin, non-metallic aggregate, and activator.
1. Composition: High solids content material exhibiting positive expansion when tested in accordance with ASTM C827/C827M.
a. Maximum Height Change: 0.06 percent.
b. Minimum Height Change: 0.02 percent.
2. Minimum Compressive Strength at 7 days, ASTM C579: 11,000 pounds per square inch.
3. Minimum Compressive Strength at 7 days, ASTM D695: 11,000 pounds per square inch (82.7 MPa).
4. Manufacturers:
a. Sika.
b. Euclid.
c. Or Equal.

2.6 BONDING AND JOINTING PRODUCTS

A. Latex Bonding Agent: Non-redispersable acrylic latex, complying with ASTM C1059/C1059M, Type II.

B. Epoxy Bonding System:
   1. Complying with ASTM C881/C881M and of Type required for specific application.

C. Waterstops: Rubber, complying with COE CRD-C 513.
   1. Configuration: As indicated on drawings.
   2. Size: As indicated on drawings.

D. Waterstops: PVC, complying with COE CRD-C 572.
   1. Configuration: As indicated on drawings.
   2. Size: As indicated on drawings.

E. Waterstops: Synthetic rubber; swells to 1000 percent of original size in clean water.
   1. Configuration: As indicated on drawings.
   2. Size: As indicated on drawings.

F. Reglets: Formed steel sheet, galvanized, with temporary filler to prevent concrete intrusion during placement.
   1. Size: As indicated on drawings.
   2. Size: 1/2 inch (13 mm) throat, 1/2 inch (13 mm) deep.

G. Slab Isolation Joint Filler: 1/2 inch (13 mm) thick, height equal to slab thickness, with removable top section that will form 1/2 inch (13 mm) deep sealant pocket after removal.
   1. Material: ASTM D1751, cellulose fiber.

H. Slab Control Joint Devices: Saw joints and doweled joints per structural drawings.

I. Slab Construction Joint Devices: Diamond dowel plates per structural drawings.

2.7 CURING MATERIALS

A. Evaporation Reducer: Liquid thin-film-forming compound that reduces rapid moisture loss caused by high temperature, low humidity, and high winds; intended for application immediately after concrete placement.

B. Curing Compound, Naturally Dissipating: Clear, water-based, liquid membrane-forming compound; complying with ASTM C309.
   1. Application: Use at all concrete slabs.
   2. Product dissipates within 4 to 6 weeks.
   3. VOC Content: Zero.
   4. Compressive Strength of Treated Concrete: Equal to or greater than strength after 28-day water cure when tested according to ASTM C39/C39M.
   5. Products: VC-5 by Sinak Corporation or an approved equal.

C. Moisture-Retaining Sheet: ASTM C171.
   1. White-burlap-polyethylene sheet, weighing not less than 3.8 ounces per square yard (1.71 kg/sq m).

D. Water: Potable, not detrimental to concrete.

2.8 CONCRETE MIX DESIGN

A. Proportioning Normal Weight Concrete: Comply with ACI 211.1 recommendations.

1. Replace as much Portland cement as possible with fly ash, ground granulated blast furnace slag, silica fume, or rice hull ash as is consistent with ACI recommendations.

B. Proportioning Structural Lightweight Concrete: Comply with ACI 211.2 recommendations.
   1. Replace as much Portland cement as possible with fly ash, ground granulated blast furnace slag, silica fume, or rice hull ash as is consistent with ACI recommendations.

C. Concrete Strength: Establish required average strength for each type of concrete on the basis of field experience or trial mixtures, as specified in ACI 301.
   1. For trial mixtures method, employ independent testing agency acceptable to Structural Engineer for preparing and reporting proposed mix designs.

D. Admixtures: Add acceptable admixtures as recommended in ACI 211.1 and at rates recommended or required by manufacturer.

E. Normal Weight Concrete:
   1. Compressive Strength, when tested in accordance with ASTM C39/C39M at 28 days: See structural drawings notes section D.
   2. Fly Ash Content: Maximum 20 percent of cementitious materials by weight.
   3. Water-Cement Ratio: Maximum 0.45 percent by weight except for slab on grade the maximum shall be 0.50.
   4. Total Air Content: 5% +/- 1% for footings and 6% +/- 1% for foundation walls and exterior concrete, determined in accordance with ASTM C173/C173M.
   5. Maximum Slump: 3 inches, additional workability may be achieved with an approved admixture that does not promote shrinkage of the concrete.
   6. Maximum Aggregate Size: 3/4 inch.
   7. Add Xypex C1000 at 12 lbs/cubic yard to concrete at elevator pit floor and walls (coordinate with Architect to potentially remove water proofing).

2.9 MIXING

A. On Project Site: Mix in drum type batch mixer, complying with ASTM C685/C685M. Mix each batch not less than 1-1/2 minutes and not more than 5 minutes.

B. Transit Mixers: Comply with ASTM C94/C94M.

C. Adding Water: Do not add water on site.

PART 3 EXECUTION

3.1 EXAMINATION

A. Verify lines, levels, and dimensions before proceeding with work of this section.

3.2 PREPARATION

A. Formwork: Comply with requirements of ACI 301. Design and fabricate forms to support all applied loads until concrete is cured, and for easy removal without damage to concrete.

B. Verify that forms are clean and free of rust before applying release agent.

C. Coordinate placement of embedded items with erection of concrete formwork and placement of form accessories.

D. Where new concrete is to be bonded to previously placed concrete, prepare existing surface by cleaning and applying bonding agent according to bonding agent manufacturer's instructions.
   1. Use epoxy bonding system for bonding to damp surfaces, for structural load-bearing applications, and where curing under humid conditions is required.
   2. Use latex bonding agent only for non-load-bearing applications.

E. Where new concrete with integral waterproofing is to be bonded to previously placed concrete, prepare surfaces to be treated in accordance with waterproofing manufacturer's instructions. Saturate cold joint surface with clean water, and remove excess water before application of coat of waterproofing admixture slurry. Apply slurry coat uniformly with semi-stiff bristle brush at rate recommended by waterproofing manufacturer.

3.3 UNDERSLAB VAPOR BARRIER:

A. Interior Slabs on Grade: Install vapor retarder under interior slabs on grade at locations where moisture sensitive flooring will be placed. Lap joints minimum 6 inches (150 mm). Seal joints, seams and penetrations watertight with manufacturer's recommended products and follow manufacturer's written instructions. Repair damaged vapor retarder before covering.
   1. Vapor Retarder Over Granular Fill: Install compactible granular fill before placing vapor retarder as indicated on drawings. Do not use sand.

B. Unroll vapor barrier with the longest dimension parallel with the direction of the concrete placement and face laps away from the expected direction of the placement whenever possible.

C. Place vapor retarder over subbase immediately prior to placing of slabs on grade. Install vapor retarder in accordance with ASTM E1643 and Manufacturer's printed instructions. Vapor retarder shall be continuous over entire floor area (where determined necessary due to floor finishes) and turned up a minimum of 2 inches at perimeter walls and penetrations. Tears, punctures and penetrations shall be taped to maintain the moisture vapor resistance integrity of vapor retarder.
   1. Repair damaged areas by cutting patches of vapor barrier, overlapping damaged area 6 inches and taping all sides with tape.

D. Coordinate placement of embedded items with erection of concrete formwork and placement of form accessories.

E. Extend vapor barrier to the perimeter of the slab. If practicable, terminate it at the top of the slab, otherwise (a) at a point acceptable to the structural engineer or (b) where obstructed by impediments, such as dowels, waterstops, or any other site condition requiring early termination of the vapor barrier. At the point of termination, seal vapor barrier to the foundation wall, grade beam or slab itself.

F. Extend vapor barrier over footings and grade beams to a distance acceptable to the Structural Engineer or stop at impediments such as dowels and waterstops.

G. Seal vapor barrier to foundation wall, grade beam, or slab at an elevation consistent with the top of the slab or terminate at impediments such as waterstops or dowels.

H. Overlap joints 6 inches and seal with manufacturer’s seam tape.

I. No penetration of the vapor barrier is allowed except for reinforcing steel and permanent utilities.

J. Repair damaged areas by cutting patches of vapor barrier, overlapping damaged area 6 inches and taping all sides with tape.

3.4 INSTALLING REINFORCEMENT AND OTHER EMBEDDED ITEMS

A. Comply with requirements of ACI 301. Clean reinforcement of loose rust and mill scale, and accurately position, support, and secure in place to achieve not less than minimum concrete coverage required for protection as specified on structural drawings.

B. Install welded wire reinforcement in maximum possible lengths, and offset end laps in both directions. Splice laps with tie wire.

C. Verify that anchors, seats, plates, reinforcement and other items to be cast into concrete are accurately placed, positioned securely, and will not interfere with concrete placement.

3.5 PLACING CONCRETE

A. Place concrete in accordance with ACI 304R.

B. Place concrete for floor slabs in accordance with ACI 302.1R.

C. Notify Architect and Structural Engineer not less than 24 hours prior to commencement of placement operations.

D. Maintain records of concrete placement. Record date, location, quantity, air temperature, and test samples taken.

E. Ensure reinforcement, inserts, waterstops, embedded parts, and formed construction joint devices will not be disturbed during concrete placement.

F. Place concrete continuously without construction (cold) joints wherever possible; where construction joints are necessary, before next placement prepare joint surface by removing laitance and exposing the sand and sound surface mortar, by sandblasting or high-pressure water jetting.

G. Finish floors level and flat, unless otherwise indicated, within the tolerances specified below.

3.6 SLAB JOINTING

A. Locate joints as indicated on drawings.

B. Anchor joint fillers and devices to prevent movement during concrete placement.

C. Isolation Joints: Use preformed joint filler with removable top section for joint sealant, total height equal to thickness of slab, set flush with top of slab.
   1. Install wherever necessary to separate slab from other building members, including columns, walls, equipment foundations, footings, stairs, manholes, sumps, and drains.

D. Load Transfer Construction and Control Joints: Install load transfer devices as indicated on structural drawings; saw cut joint at surface as indicated on structural drawings for control joints. Use slab joint protectors at intersections of all sawcut joints to prevent cross direction cut from spalling adjacent slab joint corner.

E. Saw Cut Contraction Joints: Saw cut joints before concrete begins to cool, immediately following finishing operations; use 3/16 inch thick blade and cut at least 1 inch deep but not less than one quarter (1/4) the depth of the slab.

F. Construction Joints: Diamond dowels per structural drawings.

G. Reinforcing shall be continuous through construction joints, Provide shear keys as detailed.

3.7 FLOOR FLATNESS AND LEVELNESS TOLERANCES

A. An independent testing agency, as specified in Section 014000, will inspect finished slabs for compliance with specified tolerances.

B. Maximum Variation of Surface Flatness:
   1. Exposed Concrete Floors: See below.
   2. Under All Flooring (covered slabs): F(F) of 35; F(L) of 25.

C. Correct the slab surface if tolerances are less than specified.

D. Minimum F(F) Floor Flatness and F(L) Floor Levelness Values:
   1. Exposed to View and Foot Traffic: F(F) of 50; F(L) of 40, on-grade.

E. Measure F(F) Floor Flatness and F(L) Floor Levelness in accordance with [HYPERLINK TEXT] ([HYPERLINK TEXT]), within 72 hours after slab installation; report both composite overall values and local values for each measured section.

F. Correct the slab surface if composite overall value is less than specified and if local value is less than two-thirds of specified value or less than F(F) 13/F(L) 10.

G. Correct defects by grinding or by removal and replacement of the defective work. Areas requiring corrective work will be identified. Re-measure corrected areas by the same process.

3.8 CONCRETE FINISHING

A. Repair surface defects, including tie holes, immediately after removing formwork.

B. Unexposed Form Finish: Rub down or chip off fins or other raised areas 1/4 inch (6 mm) or more in height. Rough wood float finish.

C. Exposed Form Finish: Rub down or chip off and smooth fins or other raised areas 1/4 inch (6 mm) or more in height. Provide finish as follows:
   1. Smooth Rubbed Finish: Wet concrete and rub with carborundum brick or other abrasive, not more than 24 hours after form removal.
   2. Cork Floated Finish: Immediately after form removal, apply grout with trowel or firm rubber float; compress grout with low-speed grinder, and apply final texture with cork float.

D. Concrete Slabs on Grade: Finish to requirements of ACI 302.1R, and as follows:
   1. All slabs-on-grade shall have a monolithic placement. Screed concrete to accurate level grades and float to a uniform level surface.
   2. Steel trowel with self-propelled troweling machines to a smooth, dense, hard finish. Do not burnish trowel or over-trowel surfaces with hardener. Surface shall be free from depressions, trowel marks, scale, and foreign deposits.
   3. Delay final troweling until after sheen has completely disappeared. Dusting will not be permitted under any circumstances.

4. Depress slabs where shown on Drawings. Coordinate with gym flooring.

E. Chemical Hardener: See Section 033511.

F. In areas with floor drains, maintain floor elevation at walls; pitch surfaces uniformly to drains at 1:100 nominal.

G. Concrete Polishing: See Section 033511.

3.9 CURING AND PROTECTION

A. Comply with requirements of ACI 308R. Immediately after placement, protect concrete from premature drying, excessively hot or cold temperatures, and mechanical injury.

B. Maintain concrete with minimal moisture loss at relatively constant temperature for period necessary for hydration of cement and hardening of concrete.
1. Normal concrete: Not less than seven days.
2. High early strength concrete: Not less than four days.

C. Formed Surfaces: Cure by moist curing with forms in place for full curing period.

D. Interior Floor Slabs – Slabs on Grade and Metal Deck:
1. Apply one coat of VC-5 by Sinak (or an approved equal) as soon as permitted by the manufacturer recommendations. Apply at a rate of 300 sf/gallon or as recommended by the manufacturer. Apply a second coat (perpendicular to the first coat to create a crosshatch pattern) immediately after the first coat is dry to the touch, consult manufacturer for all recommendations prior to product installation.

3.10 FOUNDATIONS FOR POLES

A. Concrete Pole Foundations:
1. Foundations shall be cast-in-place exterior concrete, having 4500 psi minimum, 28-day compressive strength.
2. Foundations shall be as detailed on the structural drawings.

B. Rub-finish and round all above-grade concrete edges to approximately 6 mm (0.25-inch) radius.

C. Anchor bolt assemblies and reinforcing of concrete foundations shall be as shown on the drawings. Anchor bolts shall be in a welded cage or properly positioned by the tiewire to stirrups.
1. Set anchor bolts according to anchor-bolt templates furnished by pole manufacturer.

D. Prior to concrete pour, install electrode per Section 260526 - Grounding and Bonding for Electrical Systems.

3.11 FIELD QUALITY CONTROL

A. An independent testing agency will perform field quality control tests, as specified on structural drawings.

B. Provide free access to concrete operations at project site and cooperate with appointed firm.

C. Submit proposed mix design of each class of concrete to inspection and testing firm for review prior to commencement of concrete operations.

D. Tests of concrete and concrete materials may be performed at any time to ensure compliance with specified requirements, refer toASTM C172.

E. Compressive Strength Tests: ASTM C39/C39M & ASTM C31/C31M, for each test, mold and cure four 6”x12” or five 4”x8” concrete test cylinders. Samples shall be obtained for each concrete class or mixture at least one per day, at least for each 150 cubic yards of concrete placed, and at least for each 5000 square feet of surface area for slabs or walls.

F. Take at least two additional 6”x12” or three 4”x8” test cylinders during cold weather concreting, cured on job site under same conditions as concrete they represent. Tested in accordance with and Field curing procedure in accordance with ASTM C39/C39M & ASTM C31/C31M, respectively.

G. Prior to the addition of plasticizer, perform one slump test for each set of test cylinders taken, following procedures of ASTM C143/C143M.

H. Entrained Air Tests: Freshly mixed concrete shall be tested for air content in accordance with ASTM C 231 and reported with compression test reports. Air, when required, is to be per section 2.8. Test air content for each exterior flatwork pour and any time the concrete mix is air-entrained.

I. Unit Weight and Yield Tests: ASTM C138/C138M, Perform unit weight test and yield test for each set of specimens obtained.

3.12 DEFECTIVE CONCRETE

A. Test Results: The testing agency shall report test results in writing to Architect and Contractor within 24 hours of test.

B. Defective Concrete: Concrete not complying with required lines, details, dimensions, tolerances or specified requirements in ACI, the specification or the contract documents..

C. Repair or replacement of defective concrete will be determined by the Architect and Structural Engineer. The cost of repair or replacement or additional testing shall be borne by Contractor when defective concrete is identified.

D. Do not patch, fill, touch-up, repair, or replace exposed concrete except upon express direction of Architect and Structural Engineer for each individual area.

3.13 PROTECTION

A. Do not permit traffic over unprotected concrete floor surface until fully cured.

END OF SECTION

SECTION 042000 - UNIT MASONRY

PART 1 GENERAL

1.1 SECTION INCLUDES

A. Concrete block.

B. Mortar and grout.

C. Reinforcement and anchorage.

D. Flashings.

E. Accessories.

F. Cleaning.

1.2 RELATED REQUIREMENTS

A. Section 055000 - Metal Fabrications: Fabricated steel items.

B. Section 072100 - Building Insulation: Insulation for cavity spaces.

C. Section 072726 - Fluid-Applied Membrane Air Barriers: Water-resistive barriers or air barriers applied to the exterior face of the backing sheathing or masonry.

D. Section 076200 - Sheet Metal Flashing and Trim: Through-wall masonry flashings.

E. Section 079200 - Joint Sealants: Sealing control and expansion joints.

F. Section 099600 - Anti-Graffiti Coatings for Waterproofing and anti-graffiti coating.

1.3 REFERENCE STANDARDS

A. ASTM A153/A153M - Standard Specification for Zinc Coating (Hot-Dip) on Iron and Steel Hardware; 2016a.

B. ASTM A615/A615M - Standard Specification for Deformed and Plain Carbon-Steel Bars for Concrete Reinforcement; 2020.

C. ASTM A706/A706M - Standard Specification for Deformed and Plain Low-Alloy Steel Bars for Concrete Reinforcement; 2016.

D. ASTM A951/A951M - Standard Specification for Steel Wire for Masonry Joint Reinforcement; 2016, with Editorial Revision (2018).

E. ASTM A1064/A1064M - Standard Specification for Carbon-Steel Wire and Welded Wire Reinforcement, Plain and Deformed, for Concrete; 2018a.

F. ASTM C90 - Standard Specification for Loadbearing Concrete Masonry Units; 2021.

G. ASTM C91/C91M - Standard Specification for Masonry Cement; 2018.

H. ASTM C129 - Standard Specification for Nonloadbearing Concrete Masonry Units; 2017.

I. ASTM C140/C140M - Standard Test Methods for Sampling and Testing Concrete Masonry Units and Related Units; 2022a.

J. ASTM C144 - Standard Specification for Aggregate for Masonry Mortar; 2018.

K. ASTM C150/C150M - Standard Specification for Portland Cement; 2021.

L. ASTM C207 - Standard Specification for Hydrated Lime for Masonry Purposes; 2018.

M. ASTM C270 - Standard Specification for Mortar for Unit Masonry; 2019a, with Editorial Revision.

N. ASTM C404 - Standard Specification for Aggregates for Masonry Grout; 2018.

O. ASTM C426 - Standard Test Method for Linear Drying Shrinkage of Concrete Masonry Units; 2016.

P. ASTM C476 - Standard Specification for Grout for Masonry; 2020.

Q. ASTM C780 - Standard Test Method for Preconstruction and Construction Evaluation of Mortars for Plain and Reinforced Unit Masonry; 2020.

R. ASTM C1072 - Standard Test Methods for Measurement of Masonry Flexural Bond Strength; 2019.

S. ASTM C1148 - Standard Test Method for Measuring the Drying Shrinkage of Masonry Mortar; 1992a (Reapproved 2014).

T. ASTM C1314 - Standard Test Method for Compressive Strength of Masonry Prisms; 2021.

U. ASTM C1714/C1714M - Standard Specification for Preblended Dry Mortar Mix for Unit Masonry; 2019a.

V. ASTM E154/E154M - Standard Test Methods for Water Vapor Retarders Used in Contact with Earth Under Concrete Slabs, on Walls, or as Ground Cover; 2008a (Reapproved 2019).

W. ASTM E514/E514M - Standard Test Method for Water Penetration and Leakage Through Masonry; 2020.

X. BIA Technical Notes No. 7 - Water Penetration Resistance – Design and Detailing; 2017.

Y. TMS 402/602 - Building Code Requirements and Specification for Masonry Structures; 2016.

1.4 SUBMITTALS

A. See Section 013300 - Submittal Requirements, for submittal procedures.

B. Product Data: Provide data for masonry units, reinforcement, mortar, grout and masonry accessories.

C. Shop Drawings: Indicate pertinent dimensions, materials, size and spacing of reinforcing, and layout.
   1. Include calculations or selections from the manufacturer's prescriptive design tables that indicate compliance with the applicable building code and project conditions.
   2. Include the design engineer's stamp or seal on each sheet of shop drawings.

D. Samples: Submit four samples of masonry units to Architect to illustrate color, texture, and extremes of color range.

E. Manufacturer's Certificate: Certify that masonry units meet or exceed specified requirements.

F. Manufacturer's Certificate: Certify that water repellent admixture manufacturer has certified masonry unit manufacturer as an approved user of water repellent admixture in the manufacture of concrete block.

G. Test Reports: Concrete masonry manufacturer's test reports for units with integral water repellent admixture.

H. Designer's Qualification Statement.

I. Manufacturer's Qualification Statement.

J. Installer's Qualification Statement.

K. Maintenance Materials: Furnish the following for Owner's use in maintenance of project.
   1. See Section 016000 - Material and Equipment, for additional provisions.

1.5 QUALITY ASSURANCE

A. Comply with provisions of TMS 402/602, except where exceeded by requirements of Contract Documents.

B. Manufacturer Qualifications: Company specializing in manufacturing the type of products specified in this section with minimum 10 years of documented experience.

C. Installer Qualifications: Company specializing in performing work of the type specified and with at least 5 years of documented experience.

1.6 MOCK-UP

A. Construct a masonry wall as a mock-up panel sized 8 feet long by 6 feet high; include mortar, accessories, structural backup, reinforcement, wall openings, flashings (with lap joint, corner, and end dam), weather barrier, wall insulation, and an expansion joint, a crossover location between alternating wall types and wall insulation in mock-up.

B. Location of mock up panel to be coordinated with Architect and Contractor.

C. Mock-up may remain as part of the Work.

1.7 FIELD CONDITIONS

A. Protection of Masonry: During construction, cover tops of walls, projections, and sills with waterproof sheeting at end of each day's work. Cover partially completed masonry when construction is not in progress.
   1. Extend cover a minimum of 24 inches down both sides of walls, and hold cover securely in place.

B. Do not apply uniform floor or roof loads for at least 12 hours and concentrated loads for at least three days after building masonry walls or columns.

C. Stain Prevention: Prevent grout, mortar, and soil from staining the face of masonry to be left exposed or painted. Immediately remove grout, mortar, and soil that come in contact with such masonry.
   1. Protect base of walls from rain-splashed mud and from mortar splatter by spreading coverings on ground and over wall surface.
   2. Protect sills, ledges, and projections from mortar droppings.

3. Protect surfaces of window and door frames, as well as similar products with painted and integral finishes, from mortar droppings.
4. Turn scaffold boards near the wall on edge at the end of each day to prevent rain from splashing mortar and dirt onto completed masonry.

D. Cold-Weather Requirements: Do not use frozen materials or materials mixed or coated with ice or frost. Do not build on frozen substrates. Remove and replace unit masonry damaged by frost or by freezing conditions. Comply with cold-weather construction requirements contained in TMS 602.
   1. Cold-Weather Cleaning: Use liquid cleaning methods only when air temperature is 40 deg F and higher and will remain so until masonry has dried, but not less than seven days after completing cleaning.

E. Hot-Weather Requirements: Comply with hot-weather construction requirements contained in TMS 602.

1.8 DELIVERY, STORAGE, AND HANDLING

A. Deliver, handle, and store masonry units by means that will prevent mechanical damage and contamination by other materials.

1.9 DESIGN STRENGTH

A. Masonry Design Strength: 8” block F’m = 2000 PSI, 12” block F’m = 2500 PSI

PART 2 PRODUCTS

2.1 MANUFACTURERS:

A. Source Limitations for Masonry Units: Obtain exposed masonry units of a uniform texture and color, or a uniform blend within the ranges accepted for these characteristics, from single source from single manufacturer for each product required.

B. Source Limitations for Mortar Materials: Obtain mortar ingredients of a uniform quality, including color for exposed masonry, from single manufacturer for each cementitious component and from single source or producer for each aggregate.

2.2 UNIT MASONRY, GENERAL

A. Masonry Standard: Comply with TMS 602 except as modified by requirements in the Contract
   1. Documents.

B. Defective Units: Referenced masonry unit standards may allow a certain percentage of units to contain chips, cracks, or other defects exceeding limits stated. Do not use units where such defects are exposed in the completed Work.

C. Fire-Resistance Ratings: Comply with requirements for fire-resistance-rated assembly designs indicated.
   1. Where fire-resistance-rated construction is indicated, units shall be listed and labeled by a qualified testing agency acceptable to authorities having jurisdiction.

2.3 CONCRETE MASONRY UNITS

A. Concrete Block Type: Comply with referenced standards and as follows:

1. Basis of Design: Type-CMU-1: Basalite, Price Tier 2.
2. Size: Standard units with nominal face dimensions of 16 by 8 inches and nominal depth of 8 and 12 inches as indicated on Drawings.
3. Special Shapes: Provide non-standard blocks configured for corners.
4. Load-Bearing Units: ASTM C90, medium weight. 8" block net area compressive strength 2000 PSI, 12" block net area compressive strength 3250 PSI.
   a. Hollow block, as indicated.
   b. Exposed Faces: Manufacturer's color's and texture's as indicated on architectural plans.
   c. Pattern: Running Bond unless otherwise noted on plans.
5. Non-Loadbearing Units: ASTM C129.
   a. Hollow block, as indicated.
   b. Medium weight.

B. Units with Integral Water Repellent: Concrete block units as specified in this section with polymeric liquid admixture added to concrete masonry units at the time of manufacture.
   1. Performance of Units with Integral Water Repellent:
      a. Water Permeance: When tested per ASTM E514/E514M and for a minimum of 72 hours.
         1) No water visible on back of wall above flashing at the end of 24 hours.
         2) No flow of water from flashing equal to or greater than 0.032 gallons per hour at the end of 24 hours.
         3) No more than 25 percent of wall area above flashing visibly damp at end of test.
      b. Flexural Bond Strength: ASTM C1072; minimum 10 percent increase.
      c. Compressive Strength: ASTM C1314; maximum 5 percent decrease.
      d. Drying Shrinkage: ASTM C1148; maximum 5 percent increase in shrinkage.
   2. Use only in combination with mortar that also has integral water repellent admixture.
   3. Use water repellent admixtures for masonry units and mortar by a single manufacturer.

2.4 MORTAR AND GROUT MATERIALS FOR BLOCK

A. General: Do not use admixtures, including pigments, air-entraining agents, accelerators, retarders, water-repellent agents, antifreeze compounds, or other admixtures unless otherwise indicated.
   1. Do not use calcium chloride in mortar or grout.
   2. Use Portland cement-lime masonry cement mortar unless otherwise indicated.
   3. Add cold-weather admixture (if used) at same rate for all mortar that will be exposed to view, regardless of weather conditions, to ensure that mortar color is consistent.

B. Masonry Cement: ASTM C91/C91M, Type S.

C. Portland Cement: ASTM C150/C150M, Type II; except Type III may be used for cold- weather construction, color as required to produce approved color sample.
   1. Not more than 0.10 percent alkali.

D. Hydrated Lime: ASTM C207, Type S.

E. Mortar Aggregate: ASTM C144.
   1. For mortar that is exposed to view, use washed aggregate consisting of natural sand or crushed stone.
   2. For joints less than 1/4 inch thick, use aggregate graded with 100 percent passing the No. 16 sieve.
   3. White-Mortar Aggregates: Natural white sand or crushed white stone.

4. Colored-Mortar Aggregates: Natural sand or crushed stone of color necessary to produce required mortar color.

F. Grout Aggregate: ASTM C404.

G. Water: Clean and potable.

H. Packaged Dry Material for Mortar for Unit Masonry: Premixed masonry cement and mason's sand; complying with ASTM C1714/C1714M and capable of producing mortar of the specified strength in accordance with ASTM C270 with the addition of water only.
   1. Type: Type M or S.
   2. Color: Standard gray.

I. Packaged Dry Material for Grout for Masonry: Premixed cementitious materials and dried aggregates; capable of producing grout of the specified strength in accordance with ASTM C476 with the addition of water only. Meet requirements for Coarse Grout. Grout shall attain a minimum compressive strength of 2000 PSI at 28 days and not less than specified F'm. For 12" block, the grout shall attain a minimum compressive strength of 2500 PSI at 28 days.
   1. Type: Coarse.

2.5 REINFORCEMENT AND ANCHORAGE

A. Reinforcing Steel: ASTM A615/A615M, Grade 60 (60,000 psi), deformed billet bars. Utilize ASTM A706/A706M, Grade 60 (60,000 psi), deformed bars where reinforcing is to be welded.

B. Two-Piece Wall Ties: Formed steel wire, 0.1875 inch thick, adjustable, eye and pintle type, hot dip galvanized to ASTM A 153/A 153M, Class B, sized to provide not less than 5/8 inch of mortar coverage from masonry face and to allow vertical adjustment of up to 1-1/4 in.

C. Masonry Veneer Anchors: 2-piece anchors that permit differential movement between masonry veneer and structural backup, hot dip galvanized to ASTM A 153/A 153M, Class B.
   1. Anchor plates: Not less than 0.075 inch thick, designed for fastening to structural backup through sheathing by two fasteners; provide design with legs that penetrate sheathing and insulation to provide positive anchorage.
   2. Wire ties: Manufacturer's standard shape, 0.1875 inch thick.
   3. Vertical adjustment: Not less than 3-1/2 inches.
   4. Seismic Feature: Provide lip, hook, or clip on end of wire ties to engage or enclose not less than one continuous horizontal joint reinforcement wire of 0.1483 inch diameter.

2.6 FLASHINGS

A. Metal Flashing Materials: Galvanized, as specified in Section 076200.

2.7 ACCESSORIES

A. Preformed Control Joints: Per Structural detail on plans.

B. Preformed Control-Joint Gaskets: Made from styrene-butadiene-rubber compound, complying with ASTM D2000, Designation M2AA-805 or PVC, complying with ASTM D2287, Type PVC- 65406 and designed to fit standard sash block and to maintain lateral stability in masonry wall; size and configuration as indicated.

2.8 MORTAR AND GROUT MIXING

A. Mortar for Unit Masonry: ASTM C270, using the Proportion Specification.
   1. Masonry mortar: Type M or S.

B. Grout: ASTM C476; consistency required to fill completely volumes indicated for grouting; utilize course grout.

C. Admixtures: Add to mixture at manufacturer's recommended rate and in accordance with manufacturer's instructions; mix uniformly.
   1. Cold-Weather Admixture: Nonchloride, noncorrosive, accelerating admixture complying with ASTM C494/C494M, Type C, and recommended by manufacturer for use in masonry mortar of composition indicated.

D. Mixing: Use mechanical batch mixer and comply with referenced standards.

2.9 CLEANING MATERIALS

A. Basis of Design Manufacturer:
   1. Diedrich Technologies, A Hohmann & Barnard Company, www.diedrichtechnologies.com.
   2. Product Name: Eco-Scrub™ Mineral Acid Free Masonry Cleaner

B. Acceptable Manufacturers:
   1. PROSOCO; Sure Klean cleaning and protective treatments for Masonry and Brick: www.prosoco.com/#sle.
   2. or Approved Equal.

C. Substitutions: See Section 016000 - Product Requirements.

D. Cleaning Agent: Detergent type.

E. Cleaning Solution: Non-acidic, not harmful to masonry work or adjacent materials.

PART 3 EXECUTION

3.1 EXAMINATION

A. Verify that field conditions are acceptable and are ready to receive masonry.

B. Verify that related items provided under other sections are properly sized and located.

C. Verify that built-in items are in proper location, and ready for roughing into masonry work.

3.2 PREPARATION

A. Direct and coordinate placement of metal anchors supplied for installation under other sections.

B. Provide temporary bracing during installation of masonry work as necessary and maintain bracing until masonry has cured to full design strength.

3.3 COLD AND HOT WEATHER REQUIREMENTS

A. Comply with requirements of TMS 402/602 or applicable building code, whichever is more stringent.

3.4 COURSING

A. Establish lines, levels, and coursing indicated. Protect from displacement.

B. Maintain masonry courses to uniform dimension. Form vertical and horizontal joints of uniform thickness.

C. Concrete Masonry Units:
   1. Bond: Running.
   2. Coursing: One unit and one mortar joint to equal 8 inches.
   3. Mortar Joints: Concave.

3.5 PLACING AND BONDING

A. Lay hollow masonry units with face shell bedding on head and bed joints.

B. Buttering corners of joints or excessive furrowing of mortar joints is not permitted.

C. Remove excess mortar and mortar smears as work progresses.

D. Remove excess mortar with water repellent admixture promptly. Do not use acids, sandblasting or high pressure cleaning methods.

E. Interlock intersections and external corners, except for units laid in stack bond.

F. Do not shift or tap masonry units after mortar has achieved initial set. Where adjustment must be made, remove mortar and replace.

G. Perform job site cutting of masonry units with proper tools to provide straight, clean, unchipped edges. Prevent broken masonry unit corners or edges.

H. Perform low lift construction with maximum grout pour height of 5'-4" unless proper cleanouts are planned and achieved for high lift grouting. Notify architect if high lift grouting is planned.

I. Cells shall be in vertical alignment. Dowels in footings shall be set to align with cores containing reinforcing steel.

J. Leave the top of grout pours recessed 1-½" and pour successive grout pour in the recess to achieve bonding.

3.6 CAVITY MORTAR CONTROL

A. Do not permit excessive mortar to drop or accumulate in grout void. Provide a minimum of ½" grout between main reinforcing and masonry units. Mortar fin projections larger than ¼" from the interior face of CMU block to be knocked off prior to grouting.

3.7 GROUTED COMPONENTS

A. Reinforce bond beams per Structural details.

B. Lap splices per structural drawings.

C. Support and secure reinforcing bars from displacement. Maintain position within 1/2 inch of dimensioned position.

D. Place and consolidate grout fill without displacing reinforcing.

3.8 CONTROL AND EXPANSION JOINTS

A. Do not continue horizontal joint reinforcement through control or expansion joints except as shown on structural drawings (at roof and floor level chords).

B. Install preformed control joint device in continuous lengths. Seal butt and corner joints in accordance with manufacturer's instructions.

C. Size control joints as indicated on drawings.

D. Form expansion joint as detailed on drawings.

3.9 REINFORCED UNIT MASONRY

A. Temporary Formwork and Shores: Construct formwork and shores as needed to support reinforced masonry elements during construction.
   1. Construct formwork to provide shape, line, and dimensions of completed masonry as indicated. Make forms sufficiently tight to prevent leakage of mortar and grout. Brace, tie, and support forms to maintain position and shape during construction and curing of reinforced masonry.
   2. Do not remove forms and shores until reinforced masonry members have hardened sufficiently to carry their own weight and other loads that may be placed on them during construction.

B. Placing Reinforcement: Comply with requirements in TMS 602/ACI 530.1/ASCE 6.

C. Grouting: Do not place grout until entire height of masonry to be grouted has attained enough strength to resist grout pressure.
   1. Comply with requirements in TMS 602/ACI 530.1/ASCE 6 for cleanouts and for grout placement, including minimum grout space and maximum pour height.
   2. Limit height of vertical grout pours to not more than 60 inches.

3.10 BUILT-IN WORK

A. As work progresses, install built-in metal door frames and other items to be built into the work and furnished under other sections.

B. Install built-in items plumb, level, and true to line.

C. Bed anchors of metal door frames in adjacent mortar joints. Fill frame voids solid with grout.
   1. Fill adjacent masonry cores with grout minimum 12 inches from framed openings.

D. Do not build into masonry construction organic materials that are subject to deterioration.

3.11 TOLERANCES

A. Install masonry within the site tolerances found in TMS 402/602.

B. Maximum Variation from Alignment of Columns: 1/4 inch.

C. Maximum Variation From Unit to Adjacent Unit: 1/16 inch.

D. Maximum Variation from Plane of Wall: 1/4 inch in 10 ft and 1/2 inch in 20 ft or more.

E. Maximum Variation from Plumb: 1/4 inch per story non-cumulative; 1/2 inch in two stories or more.

F. Maximum Variation from Level Coursing: 1/8 inch in 3 ft and 1/4 inch in 10 ft; 1/2 inch in 30 ft.

G. Maximum Variation of Mortar Joint Thickness: Head joint, minus 1/4 inch, plus 3/8 inch.

H. Maximum Variation from Cross Sectional Thickness of Walls: 1/4 inch.

3.12 CUTTING AND FITTING

A. Obtain approval prior to cutting or fitting masonry work not indicated or where appearance or strength of masonry work may be impaired.

3.13 FIELD QUALITY CONTROL

A. An independent testing agency will perform field quality control tests, as specified in on Structural Drawings.

B. Concrete Masonry Unit Tests: Test each variety of concrete unit masonry in accordance with ASTM C140/C140M for compliance with requirements of this specification.

C. Mortar Tests: Test each type of mortar in accordance with ASTM C780, testing with same frequency as masonry samples.

D. Prism Tests: Test each prism in accordance with ASTM C1314 or per structural drawings.
   1. A set of five masonry prisms shall be built and tested in accordance with ASTM C1314 or an approved equal ASTM standard test method prior to the start of construction. Materials used for the construction of the prisms shall be taken from those specified to be used in the Project. Prisms shall be constructed under the observation of the engineer or special inspector or an approved agency and tested by an approved agency.
   2. A set of three (3) prisms shall be built and tested during construction in accordance with ASTM C1314 or an approved equal ASTM standard test method for each 5,000 square feet of wall area, but not less than one (1) set of three (3) prisms for the Project.
   3. Make report of test results in writing and expedited to Contractor, Architect, Owner, and the Structural Engineer. Include in test reports the project identification name and number, date, name of subcontractor, name of testing service and identification number.

3.14 REPAIRING, POINTING, AND CLEANING

A. Remove and replace masonry units that are loose, chipped, broken, stained, or otherwise damaged or that do not match adjoining units. Install new units to match adjoining units; install in fresh mortar, pointed to eliminate evidence of replacement.

B. Pointing: During the tooling of joints, enlarge voids and holes, except weep holes, and completely fill with mortar. Point up joints, including corners, openings, and adjacent construction, to provide a neat, uniform appearance. Prepare joints for sealant application, where indicated.

C. In-Progress Cleaning: Clean unit masonry as work progresses by dry brushing to remove mortar fins and smears before tooling joints.
   1. Immediately remove stains, efflorescence, or other excess resulting from the work of this section.
   2. Remove excess mortar, smears, and droppings as work proceeds and upon completion.
   3. Clean surrounding surfaces.

D. Final Cleaning: After mortar is thoroughly set and cured, clean exposed masonry as follows:

1. Remove large mortar particles by hand with wooden paddles and nonmetallic scrape hoes or chisels.
2. Test cleaning methods on sample wall panel; leave one-half of panel uncleaned for comparison purposes. Obtain Architect's approval of sample cleaning before proceeding with cleaning of masonry.
3. Protect adjacent stone and non-masonry surfaces from contact with cleaner by covering them with liquid strippable masking agent or polyethylene film and waterproof masking tape.
4. Wet wall surfaces with water before applying cleaners; remove cleaners promptly by rinsing surfaces thoroughly with clear water.
5. Clean concrete masonry by applicable cleaning methods indicated in NCMA TEK 8-4A.
6. Scrub walls with cleaning agent solution using stiff brush. Thoroughly rinse and wash off cleaning solution, dirt and mortar crumbs using clean, pressurized water.
7. Protect area below cleaning operation and keep masonry soaked with water and flushed free of acid and dissolved mortar continuously for duration of cleaning.

3.15 PROTECTION

A. Without damaging completed work, provide protective boards at exposed external corners that are subject to damage by construction activities.

END OF SECTION

SECTION 051200 - STRUCTURAL STEEL FRAMING

PART 1 GENERAL

1.1 SECTION INCLUDES

A. Structural steel framing members.

B. Structural steel support members and struts.

C. Base plates, shear stud connectors and expansion joint plates.

D. Grouting under base plates.

1.2 RELATED REQUIREMENTS

A. Section 052100 - Steel Joist Framing.

B. Section 053100 - Steel Decking: Support framing for small openings in deck.

C. Section 055000 - Metal Fabrications: Steel fabrications affecting structural steel work.

1.3 REFERENCE STANDARDS

A. AISC (MAN) - Steel Construction Manual; 2017.

B. AISC 303 - Code of Standard Practice for Steel Buildings and Bridges; 2016.

C. ASTM A36/A36M - Standard Specification for Carbon Structural Steel; 2019.

D. ASTM A53/A53M - Standard Specification for Pipe, Steel, Black and Hot-Dipped, Zinc-Coated, Welded and Seamless; 2020.

E. ASTM A153/A153M - Standard Specification for Zinc Coating (Hot-Dip) on Iron and Steel Hardware; 2016a.

F. ASTM A307 - Standard Specification for Carbon Steel Bolts, Studs, and Threaded Rod 60 000 PSI Tensile Strength; 2021.

G. ASTM A500/A500M - Standard Specification for Cold-Formed Welded and Seamless Carbon Steel Structural Tubing in Rounds and Shapes; 2021a.

H. ASTM A529/A529M - Standard Specification for High-Strength Carbon-Manganese Steel of Structural Quality; 2019.

I. ASTM A992/A992M - Standard Specification for Structural Steel Shapes; 2020.

J. ASTM A1011/A1011M - Standard Specification for Steel, Sheet and Strip, Hot-Rolled, Carbon, Structural, High-Strength Low-Alloy, High-Strength Low-Alloy with Improved Formability, and Ultra-High Strength; 2018a.

K. AWS A2.4 - Standard Symbols for Welding, Brazing, and Nondestructive Examination; 2020.

L. IAS AC172 - Accreditation Criteria for Fabricator Inspection Programs for Structural Steel AC172; 2019.

M. RCSC (HSBOLT) - Specification for Structural Joints Using High-Strength Bolts; Research Council on Structural Connections; 2020.

1.4 SUBMITTALS

A. See Section 013300 - Submittal Requirements, for submittal procedures.

B. Shop Drawings:
   1. Indicate profiles, sizes, spacing, locations of structural members, openings, attachments, and fasteners. Indicate all bolt sizes, bolt holes, weld locations and sizes, and grades of all materials used.
   2. Verify all dimensions with architectural and structural drawings.
   3. Connections not detailed.
   4. Indicate cambers as shown on structural drawings.
   5. Indicate all connections as shown on structural drawings.

C. Manufacturer's Mill Certificate: Certify that products meet or exceed specified requirements.

D. Mill Test Reports: Indicate structural strength, destructive test analysis and non-destructive test analysis.

E. Fabricator Test Reports: Comply with ASTM A1011/A1011M.

F. Materials Test Reports: Submit independent test results or engineered performance analysis of structural thermal-break pad performance in bearing or slip-critical connections where shear and moment loads are applied if indicated on structural drawings.

G. Fabricator's Qualification Statement: Provide documentation showing steel fabricator is accredited under IAS AC172.

1.5 QUALITY ASSURANCE

A. Fabricate structural steel members in accordance with AISC (MAN) "Steel Construction Manual."

B. Fabricator: Company specializing in performing the work of this section with minimum 10 years of documented experience.

C. Fabricator Qualifications: A qualified steel fabricator that is accredited by the International Accreditation Service (IAS) Fabricator Inspection Program for Structural Steel in accordance with IAS AC172.

D. Erector: Company specializing in performing the work of this section with minimum 5 years of documented experience.

PART 2 PRODUCTS

2.1 MATERIALS

A. Steel Angles, Channels, Bars, and Plates: ASTM A36/A36M.

B. Steel W Shapes and WT Shapes: ASTM A992/A992M.

C. Steel Shapes, Plates, and Bars: ASTM A529/A529M high-strength, carbon-manganese structural steel, Grade 50 where indicated on Structural Drawings.

D. Structural HSS Tubing: ASTM A500/A500M, Grade C.

E. Pipe: ASTM A53/A53M, Grade B.

F. Shear Stud Connectors (Headed Studs): Nelson Stud Anchors (or approved equal). In compliance with ASTM A108. Fu = 65 ksi..

G. Structural Bolts and Nuts: Carbon steel, ASTM A307, Grade A and galvanized in compliance with ASTM A153/A153M, Class C.

H. Structural Bolts, Nuts, and Washers (designated A325N bolts on plans): All nuts and bolts in structural steel connections shall be Per ASTM F1852, twist off type tension control, with hardened washers.

I. Anchor Bolts: ASTM F1554 Gr. 36, unless noted otherwise on structural drawings.

J. Welding Materials: E70XX, low hydrogen electrodes.

K. Grout: See section 033000, 2.5.B.

L. Shop and Touch-Up Primer: Fabricator's standard, complying with VOC limitations of authorities having jurisdiction.

M. Touch-Up Primer for Galvanized Surfaces: Fabricator's standard, complying with VOC limitations of authorities having jurisdiction.

2.2 FABRICATION

A. Shop fabricate to greatest extent possible.

B. Space shear stud connectors as shown on Structural Drawings.

C. Continuously seal joined members by continuous welds. Grind exposed welds smooth.

D. Fabricate connections for bolt, nut, and washer connectors.

E. Develop required camber for members.

2.3 FINISH

A. Shop prime structural steel members. Do not prime surfaces that will be fireproofed, field welded, in contact with concrete, or high strength bolted.

2.4 SOURCE QUALITY CONTROL

A. Provide special inspection as shown on the structural drawings.

B. Testing and inspection shall be in accordance with AISC 360 and AWS standards.

PART 3 EXECUTION

3.1 EXAMINATION

A. Verify that conditions are appropriate for erection of structural steel and that the work may properly proceed.

3.2 ERECTION

A. Erect structural steel in compliance with AISC 303.

B. Allow for erection loads and provide sufficient temporary bracing to maintain structure in safe condition, plumb, and in true alignment until completion of erection and installation of permanent bracing.

C. Field weld components indicated on on shop drawings and structural drawings.

D. Use carbon steel bolts only for temporary bracing during construction, unless otherwise specifically permitted on drawings. Install high-strength bolts in accordance with RCSC (HSBOLT) "Specification for Structural Joints Using High-Strength Bolts".

E. Do not field cut or alter structural members without approval of Structural Engineer.

F. After erection, prime welds, abrasions, and surfaces not shop primed, except surfaces to be in contact with concrete.

G. Grout solidly between column plates and bearing surfaces, complying with manufacturer's instructions for nonshrink grout. Trowel grouted surfaces smooth, splaying neatly to 45 degrees.

3.3 TOLERANCES

A. Erection tolerances shall be in accordance with AISC standards and AISC 303.

3.4 FIELD QUALITY CONTROL

A. An independent testing agency will perform field quality control tests, as specified in Section 014000 - Quality Requirements and on the Structural Drawings.

END OF SECTION

SECTION 052100 - STEEL JOIST FRAMING

PART 1 GENERAL

1.1 SECTION INCLUDES

A. Open web steel joists and shear stud connectors, with bridging, attached seats and anchors.

B. Loose bearing members, such as plates or angles, and anchor bolts for site placement.

C. Supplementary framing for floor and roof openings greater than 18 inches.

1.2 RELATED REQUIREMENTS

A. Section 051200 - Structural Steel Framing: Grouting base plates and bearing plates. Superstructure framing.

B. Section 051200 - Structural Steel Framing: Superstructure framing.

C. Section 053100 - Steel Decking: Bearing plates and angles.

D. Section 053100 - Steel Decking: Support framing for openings less than 18 inches in decking.

E. Section 055000 - Metal Fabrications: Non-framing steel fabrications attached to joists.

1.3 REFERENCE STANDARDS

A. ASTM A36/A36M - Standard Specification for Carbon Structural Steel; 2019.

B. ASTM A108 - Standard Specification for Steel Bar, Carbon and Alloy, Cold-Finished; 2018.

C. ASTM F1852 - Standard Specification for "Twist Off" Type Tension Control Structural Bolt/Nut/Washer Assemblies, Steel, Heat Treated, 120/105 ksi Minimum Tensile Strength; 2011.

D. ASTM F436/F436M - Standard Specification for Hardened Steel Washers Inch and Metric Dimensions; 2019.

E. AWS D1.1/D1.1M - Structural Welding Code - Steel; 2020, with Errata (2021).

F. IAS AC172 - Accreditation Criteria for Fabricator Inspection Programs for Structural Steel AC172; 2019.

G. SJI 100 - Standard Specifications for K-Series, LH-Series, and DLH-Series Open Web Steel Joists, and for Joist Girders; 2020.

H. SJI Technical Digest No. 9 - Handling and Erection of Steel Joists and Joist Girders; 2008.

I. SSPC-Paint 15 - Steel Joist Shop Primer/Metal Building Primer; 2004.

J. SSPC-Paint 20 - Zinc-Rich Coating (Type I - Inorganic, and Type II - Organic); 2019.

1.4 SUBMITTALS

A. See Section 013300 - Submittal Requirements, for submittal procedures.

B. Shop Drawings: Indicate standard designations, joist coding, configurations, sizes, spacings, cambers, locations of joists, joist leg extensions, bridging, connections, and attachments. Indicate

special loading as designated on the structural drawings. Shop drawings shall be submitted to Architect and Structural Engineer for approval prior to any fabrication.

C. Engineering Calculations: Engineering calculations stamped by a Nevada licensed civil or structural engineer shall be submitted to Architect and Structural Engineer for approval prior to any fabrication.

D. Joist Design: See structural drawings for joist design criteria and joist loading requirements. Design joists for all loads as shown on structural drawings, including but not limited to top chord axial loads, vertical loading as shown, add live loads as shown, wind uplift as shown, joist seat wall anchorage axial loads and special loading from mechanical units and other items on or hung from roof structure.

E. Designer's Qualification Statement.

F. Manufacturer's Qualification Statement.

G. Fabricator's Qualification Statement.

H. Erector's Qualification Statement.

1.5 QUALITY ASSURANCE

A. Design joists and all bridging connections not detailed on drawings under direct supervision of a Professional Structural or Civil Engineer experienced in design of this work and licensed in Nevada.

B. Perform Work, including that for headers and other supplementary framing, in accordance with SJI 100 Standard Specifications Load Tables and SJI Technical Digest No. 9.

C. Manufacturer Qualifications: Company specializing in performing the work of this section with minimum 10 years documented experience.

D. Fabricator Qualifications: A qualified steel fabricator that is accredited by the International Accreditation Service (IAS) Fabricator Inspection Program for Structural Steel in accordance with IAS AC172.

E. Erector Qualifications: Company specializing in performing the work of this section with minimum 5 years documented experience.

1.6 DELIVERY, STORAGE, AND HANDLING

A. Transport, handle, store, and protect products to SJI requirements.

PART 2 PRODUCTS

2.1 MANUFACTURERS

A. Steel Joists:
1. Canam Group Inc: www.canam-steeljoists.ws
2. Nucor-Vulcraft Group: www.vulcraft.com.
3. New Millennium Building Systems: www.newmill.com
4. Valley Joist Inc. : valleyjoist.com
5. Substitutions: See Section 012500 - Substitution Procedures.

2.2 MATERIALS

A. Open Web Joists: SJI Type K Joists:
   1. Provide bottom chord extensions as indicated.
   2. Minimum End Bearing on Steel Supports: Comply with referenced SJI standard.
   3. Minimum End Bearing on Concrete or Masonry Supports: Comply with referenced SJI standard.
   4. Finish: Shop primed.
   5. Joist seat depths as indicated on structural drawings.

B. Open Web Joists: SJI 100 Type LH Joists:
   1. Provide bottom chord extensions as indicated.
   2. Minimum End Bearing on Steel Supports: Comply with referenced SJI standards.
   3. Minimum End Bearing on Masonry or Concrete Supports: Comply with referenced SJI standards.
   4. Finish: Shop primed.
   5. Joist seat depths as indicated on structural drawings.

C. Open Web Joists: SJI 100 Type DLH Joists:
   1. Provide bottom chord extensions as indicated.
   2. Minimum End Bearing on Steel Supports: Comply with referenced SJI standards.
   3. Minimum End Bearing on Masonry or Concrete Supports: Comply with referenced SJI standards.
   4. Finish: Shop primed.
   5. Joist seat depths as indicated on structural drawings.

D. Open Web Joists: SJI 100 Joist Girders:
   1. Provide bottom chord extensions as indicated.
   2. Minimum End Bearing on Steel Supports: Comply with referenced SJI standards.
   3. Minimum End Bearing on Masonry or Concrete Supports: Comply with referenced SJI standards.
   4. Finish: Shop primed.
   5. Joist seat depths as indicated on structural drawings.

E. High-Strength Structural Bolts, Nuts, and Washers: ASTM A325N with hardened washers.

F. Tension Control Bolts: Twist-off type; ASTM F1852.

G. Shear Stud Connectors: ASTM A108.

H. Structural Steel For Supplementary Framing and Joist Leg Extensions: ASTM A36/A36M.

I. Welding Materials: AWS D1.1/D1.1M; type required for materials being welded.

J. Shop and Touch-Up Primer: SSPC-Paint 15, complying with VOC limitations of authorities having jurisdiction.

K. Touch-Up Primer for Galvanized Surfaces: SSPC-Paint 20, Type I - Inorganic, complying with VOC limitations of authorities having jurisdiction.

2.3 FABRICATION

A. Fabricate joists to comply with the maximum depths as shown on the structural drawings.

B. All open web joists shall be shop painted and touched up in the field after erection.

2.4 FINISH

A. Provide shop coat as indicated. Touch up in the field after erection.

PART 3 EXECUTION

3.1 EXAMINATION

A. Verify existing conditions prior to beginning work.

3.2 ERECTION

A. Erect joists with correct bearing on supports.

B. Allow for erection loads. Provide sufficient temporary bracing to maintain framing safe, plumb, and in true alignment.

C. Coordinate the placement of anchors for securing loose bearing members furnished as part of the work of this section.

D. After joist alignment and installation of framing, field weld or bolt joist seats to steel bearing surfaces as shown on shop drawings and structural drawings.

E. Install supplementary framing for floor and roof openings greater than as indicated on Structural Drawings.

F. All joists shall have bridging as shown on the structural drawings and as recommended by the steel joist institute.

G. Do not permit erection of decking until joists are braced, bridged, and secured or until completion of erection and installation of permanent bridging and bracing.

H. Do not field cut or alter structural members without approval of joist manufacturer.

I. After erection, prime welds, damaged shop primer, and surfaces not shop primed, except surfaces specified not to be primed.

3.3 TOLERANCES

A. Erection tolerances shall be in accordance with AISC standards, SJI standards and AISC 303.

3.4 FIELD QUALITY CONTROL

A. An independent testing agency will perform field quality control tests, as specified in Section 014000 - Quality Requirements.

B. Erection tolerances shall be in accordance with AISC standards, SJI standards and AISC 303.

END OF SECTION

SECTION 053100 - STEEL DECKING

PART 1 GENERAL

1.1 SECTION INCLUDES

A. Acoustical steel roof deck.

B. Roof deck.

C. Supplementary framing for openings up to and including 18 inches.

D. Bearing plates and angles.

E. Stud shear connectors.

F. Acoustical insulation in roof deck flutes.

1.2 RELATED REQUIREMENTS

A. Section 033000 - Cast-in-Place Concrete: Concrete topping over metal deck.

B. Section 042000 - Unit Masonry: Placement of anchors for bearing plates embedded in unit masonry assemblies.

C. Section 051200 - Structural Steel Framing: Support framing for openings larger than 18 inches and shear stud connectors.

D. Section 051200 - Structural Steel Framing: Placement of embedded steel anchors for bearing plates in cast-in-place concrete.

E. Section 055000 - Metal Fabrications: Steel angle concrete stops at deck edges.

F. Section 260533.16 - Boxes for Electrical Systems: Electrical, telephone, floor outlets, sleeves, and gaskets.

1.3 REFERENCE STANDARDS

A. ASTM A36/A36M - Standard Specification for Carbon Structural Steel; 2019.

B. ASTM A108 - Standard Specification for Steel Bar, Carbon and Alloy, Cold-Finished; 2018.

C. ASTM A653/A653M - Standard Specification for Steel Sheet, Zinc-Coated (Galvanized) or Zinc-Iron Alloy-Coated (Galvannealed) by the Hot-Dip Process; 2020.

D. ASTM B633 - Standard Specification for Electrodeposited Coatings of Zinc on Iron and Steel; 2019.

E. AWS D1.3/D1.3M - Structural Welding Code - Sheet Steel; 2018.

F. IAS AC172 - Accreditation Criteria for Fabricator Inspection Programs for Structural Steel AC172; 2019.

G. SDI (DM) - Publication No.30, Design Manual for Composite Decks, Form Decks, and Roof Decks; 2007.

H. SSPC-Paint 15 - Steel Joist Shop Primer/Metal Building Primer; 2004.

I. SSPC-Paint 20 - Zinc-Rich Coating (Type I - Inorganic, and Type II - Organic); 2019.

1.4 SUBMITTALS

A. See Section 013000 - Administrative Requirements, for submittals procedures.

B. Product Data: Provide deck profile characteristics, dimensions, structural properties, and finishes.

C. Product Test Reports: Based on evaluation of comprehensive tests performed by a qualified testing agency, indicating that each of the following complies with requirements:
   1. Power-actuated mechanical fasteners.
   2. Acoustical roof deck.

D. Shop Drawings: Indicate deck plan, support locations, projections, openings, reinforcement, pertinent details, and accessories.

E. Certificates: Certify that products furnished meet or exceed specified requirements.

F. Submit manufacturer's installation instructions.

G. Designer's Qualification Statement.

H. Fabricator's Qualification Statement: Provide documentation showing steel fabricator is accredited under IAS AC172.

1.5 QUALITY ASSURANCE

A. Quality assurance shall be as indicated on structural drawings, unless noted otherwise.

B. Fabricator Qualifications: A qualified steel fabricator that is accredited by the International Accreditation Service (IAS) Fabricator Inspection Program for Structural Steel in accordance with IAS AC172.

C. Installer Qualifications: Company specializing in performing the work of this Section with minimum 5 years of experience.

1.6 DELIVERY, STORAGE, AND HANDLING

A. Cut plastic wrap to encourage ventilation.

B. Separate sheets and store deck on dry wood sleepers; slope for positive drainage.

PART 2 PRODUCTS

2.1 MANUFACTURERS

A. Steel Deck:
   1. ASC Steel Deck: www.ascsd.com.
   2. Nucor-Vulcraft Group: www.vulcraft.com/#sle.
   3. Verco Decking, Inc.: www.vercodeck.com.

B. Acoustical Deck:
   1. Epic Metals Corporation: www.epicmetals.com.

C. Substitutions: See Section 012500 - Substitution Procedures.

2.2 STEEL DECK

A. Acoustical Steel Roof Deck: Fabricate panels, without top-flange stiffening grooves, to comply with "SDI Specifications and Commentary for Steel Roof Deck," in SDI Publication No. 31, and with the following:
   1. Galvanized Steel Sheet: ASTM A653/A653M, Structural Steel (SS) Grade 33/230, with G60/Z180 galvanized coating.
   2. Primer: Shop coat of manufacturer's standard primer paint over cleaned and phosphatized substrate.
   3. Structural Properties:
      a. Section modulus: Positive, Sp=0.99 cubic inches per foot, Negative, Sn=1.03 cubic inches per foot.
      b. Span Design: Double minimum.
   4. Minimum Base Metal Thickness: 18 gauge, 0.0474 inch.
   5. Nominal Height: 3-1/2 inch.
   6. Profile: Epicore ER3.5A-18.
   7. Formed Sheet Width: 24 inch.
   8. Side Joints: Per Structural Drawings.
   9. End Joints: Per Structural Drawings.
   10. Acoustical Perforations: Deck units with manufacturer's standard perforated bottom.
      a. Non-Perforated Deck: to match description as indicated in this Section without perforations. Refer to Drawings for locations.
   11. Acoustical Insulation: Glass fiber type, minimum 1 lb./cu.ft. density, profiled to suit deck, meeting IBC requirements for exposed insulation material, factory installed into deck cells.

B. Roof Deck: Non-composite type, fluted steel sheet:
   1. Galvanized Steel Sheet: ASTM A653/A653M, Structural Steel (SS) Grade 33/230, with G60/Z180 galvanized coating.
   2. Primer: Shop coat of manufacturer's standard primer paint over cleaned and phosphatized substrate.
   3. Structural Properties:
      a. Section Modulus: +Seff=0.314 cubic inch per foot, -Seff=0.331 cubic inch per foot.
      b. Span Design: Double minimum.
   4. Minimum Base Metal Thickness: 18 gauge, 0.0474 inch.
   5. Nominal Height: 1-1/2 inch.
   6. Profile: PLB-36.
   7. Formed Sheet Width: 36 inch.
   8. Side Joints: Per Structural Drawings.
   9. End Joints: Per Structural Drawings.

2.3 ACCESSORY MATERIALS

A. Bearing Plates and Angles: ASTM A36/A36M steel, galvanized per ASTM A123/A123M.

B. Stud Shear Connectors: Made from ASTM A108 Grade 1015 bars.

C. Fasteners: Galvanized hardened steel, self- tapping where indicated on Structural Drawings.

D. Powder Actuated Mechanical Fasteners: Provide the fasteners with diameters, types and patterns as indicated on the structural drawings

E. Mechanical Fasteners: Provide the fasteners with diameters, types and patterns as indicated on the structural drawings.
   1. Design Requirements for Sidelap Connections: Provide the connections and patterns as indicated on the structural drawings
   2. Fasteners for Steel Roof Decks Protected with Waterproofing Membrane: ASTM B633, SC1, Type III zinc electroplate.
   3. Fasteners for Exposed Steel Roof Deck Application: Manufacturer's standard stainless steel with bonded neoprene washer.

F. Shop and Touch-Up Primer: SSPC-Paint 15, complying with VOC limitations of authorities having jurisdiction.

G. Touch-Up Primer for Galvanized Surfaces: SSPC-Paint 20, complying with VOC limitations of authorities having jurisdiction.

H. Flute Closures: Closed cell foam rubber, 1 inch thick; profiled to fit tight to the deck.

I. Acoustical Insulation: Glass fiber type, minimum 1.1 lb/cu ft density; profiled to suit deck. Only required at acoustical decking locations.

2.4 FABRICATED DECK ACCESSORIES

A. Sheet Metal Deck Accessories: Metal closure strips, wet concrete stops, and cover plates, 22 gauge, 0.0299 inch thick sheet steel; of profile and size as indicated; finished same as deck.

B. Cant Strips: Formed sheet steel, 20 gauge, 0.0358 inch minimum thickness, 45 degree slope, 3-1/2 inch nominal width and height, flange for attachment.

C. Roof Sump Pans: Formed sheet steel, 14 gauge, 0.0747 inch minimum thickness, flat bottom, sloped sides, recessed 1-1/2 inches below roof deck surface, bearing flange 3 inches wide, sealed watertight.

D. Floor Drain Pans: Formed sheet steel, 14 gauge, 0.0747 inch minimum thickness, flat bottom, sloped sides, recessed 1-1/2 inches below floor deck surface, bearing flange 3 inches wide, sealed watertight.

PART 3 EXECUTION

3.1 INSTALLATION

A. Erect metal deck in accordance with SDI Design Manual and manufacturer's instructions. Align and level.

B. On concrete and masonry surfaces provide minimum 4 inch bearing.

C. On steel supports provide minimum 2 inch bearing.

D. Fasten deck to steel support members.

E. Drive mechanical sidelap connectors completely through adjacent lapped sheets; positively engage adjacent sheets with minimum three-thread penetration.

F. Fasten side laps with mechanical fasteners where indicated on structural drawings.

G. Weld deck in accordance with AWS D1.3/D1.3M where required.

H. Reinforce deck openings as details on structural drawings indicate.

I. At floor edges, install concrete stops upturned to top surface of slab, to contain wet concrete. Provide stops as indicated on Structural Drawings.

J. At openings between deck and walls, columns, and openings, provide sheet steel closures and angle flashings to close openings.

K. Close openings above walls and partitions perpendicular to deck flutes with single row of foam cell closures.

L. Place metal cant strips in position and fusion weld.

M. Position roof drain pans with flange bearing on top surface of deck. Fusion weld at each deck flute.

N. Position floor drain pans with flange bearing on top surface of deck. Fusion weld at each deck flute.

O. Weld stud shear connectors through steel deck to structural members below with size and spacings as indicated on structural drawings.

P. Immediately after welding deck and other metal components in position, coat welds, burned areas, and damaged surface coating, with touch-up primer.

END OF SECTION

SECTION 054000 - COLD-FORMED METAL FRAMING

PART 1 GENERAL

1.1 SECTION INCLUDES

A. Formed steel stud exterior wall, interior wall, and soffit framing.

B. Formed steel joist and purlin framing and bridging.

1.2 RELATED REQUIREMENTS

A. Section 092116 - Gypsum Board Assemblies: Gypsum-based sheathing.

B. Section 092216 - Non-Structural Metal Framing.

C. Section 095100 - Acoustical Ceilings: Ceiling suspension system.

1.3 REFERENCE STANDARDS

A. ASTM A153/A153M - Standard Specification for Zinc Coating (Hot-Dip) on Iron and Steel Hardware; 2016a.

B. ASTM A653/A653M - Standard Specification for Steel Sheet, Zinc-Coated (Galvanized) or Zinc-Iron Alloy-Coated (Galvannealed) by the Hot-Dip Process; 2020.

C. ASTM A1008/A1008M - Standard Specification for Steel, Sheet, Cold-Rolled, Carbon, Structural, High-Strength Low-Alloy, High-Strength Low-Alloy with Improved Formability, Required Hardness, Solution Hardened, and Bake Hardenable; 2021a.

D. ASTM C955 - Standard Specification for Cold-Formed Steel Structural Framing Members; 2018, with Editorial Revision.

E. ASTM C1007 - Standard Specification for Installation of Load Bearing (Transverse and Axial) Steel Studs and Related Accessories; 2020.

F. AWS B2.1/B2.1M - Specification for Welding Procedure and Performance Qualification; 2014, with Amendment (2015).

G. AWS D1.1/D1.1M - Structural Welding Code - Steel; 2020, with Errata (2021).

H. AWS D1.3/D1.3M - Structural Welding Code - Sheet Steel; 2018.

I. ICC-ES AC38 - Acceptance Criteria for Water-Resistive Barriers; 2016, with Editorial Revision (2019).

J. PS 1 - Structural Plywood; 2009 (Revised 2019).

K. SSPC-Paint 20 - Zinc-Rich Coating (Type I - Inorganic, and Type II - Organic); 2019.

1.4 ADMINISTRATIVE REQUIREMENTS

A. Coordinate with work of other sections that is to be installed in or adjacent to the metal framing system, including but not limited to structural anchors, cladding anchors, utilities, insulation, and firestopping.

1.5 SUBMITTALS

A. See Section 013300 - Submittal Requirements for submittal procedures.

B. Product Data: Provide data on standard framing members; describe materials and finish, product criteria, and imitations.

C. Product Data: Provide manufacturer's data on factory-made framing connectors, showing compliance with requirements.

D. Shop Drawings: Indicate component details, framed openings, bearing, anchorage, loading, welds, and type and location of fasteners, and accessories or items required of related work.
   1. Indicate stud and ceiling joist layout.
   2. Describe method for securing studs to tracks and for bolted framing connections.
   3. Design data:
      a. Shop drawings signed and sealed by a professional structural engineer.
   4. Calculations for loadings and stresses of specially fabricated framing, signed and sealed by a professional structural engineer.
   5. Match detailing on structural drawings.

E. Manufacturer's Installation Instructions: Indicate special procedures, conditions requiring special attention.

F. Designer's Qualification Statement.

G. Manufacturer's Qualification Statement.

H. Welders' Qualification Statement: Welders' certificates in accordance with AWS B2.1/B2.1M and dated no more than 12 months before the start of scheduled welding work.

1.6 QUALITY ASSURANCE

A. Designer Qualifications: Design framing system under direct supervision of a Professional Structural Engineer experienced in design of this work and licensed in Nevada.

B. Manufacturer Qualifications: Company specializing in manufacturing the types of products specified in this section, and with minimum 10 years of documented experience.

C. Welder Qualifications: Welding processes and welding operators qualified in accordance with AWS D1.1/D1.1M and AWS D1.3/D1.3M and dated no more than 12 months before start of scheduled welding work.

D. Installer Qualifications: Company specializing in performing the work of this section with minimum 5 years documented experience.

PART 2 PRODUCTS

2.1 MANUFACTURERS

A. Metal Framing:
   1. CEMCO: www.cemcosteel.com/#sle.
   2. ClarkDietrich: www.clarkdietrich.com/#sle.
   3. SCAFCO Corporation: www.scafco.com/#sle.

B. Framing Connectors and Accessories:
   1. Same manufacturer as metal framing.

C. Substitutions: See Section 012500 - Substitution Procedures.

2.2 FRAMING SYSTEM

A. Provide primary and secondary framing members, bridging, bracing, plates, gussets, clips, fittings, reinforcement, and fastenings as required to provide a complete framing system.

B. Shop fabricate framing system to the greatest extent possible.

C. Deliver to project site in largest practical sections.

2.3 FRAMING MATERIALS

A. Studs and Track: ASTM C955; track in matching nominal width and compatible height.
   1. Gauge and Depth: As indicated on drawings.
   2. Galvanized in accordance with ASTM A653/A653M, G60/Z180 coating.
   3. Provide components fabricated from ASTM A1008/A1008M, Designation SS (structural steel).

B. Jamb Studs: Engineered, C-shaped with wide flanges, designed to replace conventional double-stud framing at openings.

C. Header: As indicated on drawings.
   1. Jamb Mounting Clips: Manufacturer's standard.
   2. Cripple Stud Clips: Manufacturer's standard.

D. Framing Connectors: Factory-made, formed steel sheet.
   1. Material: ASTM A653/A653M SS Grade 33 and 40 (minimum), with G90/Z275 hot dipped galvanized coating for base metal thickness less than 10 gauge, 0.1345 inch, and factory punched holes and slots.
   2. Movement Connections: Provide mechanical anchorage devices that accommodate movement using slotted holes, shouldered screws or screws and anti-friction or stepped bushings, while maintaining structural performance of framing. Provide movement connections where indicated on drawings.
      a. Where top of stud wall terminates below structural floor or roof, connect studs to structure in manner allowing vertical and horizontal movement of slab without affecting studs; allow for minimum movement of 1/2 inch.
      b. Provide top track with long leg track and head of wall movement connectors; minimum track length of 10 feet.
   3. Fixed Connections: Provide non-movement connections for tie-down to foundation, floor-to-floor tie-down, roof-to-wall tie-down, joist hangers, gusset plates, and stiffeners.
   4. Wall Stud Bridging Connections: Provide mechanical load-transferring devices that accommodate wind load torsion and weak axis buckling induced by axial compression loads. Provide bridging connections where indicated on the drawings.

2.4 FASTENERS

A. Self-Drilling, Self-Tapping Screws, Bolts, Nuts and Washers: Hot dip galvanized per ASTM A153/A153M.

B. Anchorage Devices: Powder actuated.

C. Welding: Comply with AWS D1.1/D1.1M.

2.5 WALL SHEATHING

A. Plywood; PS 1, Grade C-D, Exposure I.

B. Gypsum Board Wall Sheathing: See Section 092116.

2.6 ACCESSORIES

A. Bracing, Furring, Bridging: Formed sheet steel, thickness determined for conditions encountered; finish to match framing components.

B. Touch-Up Primer for Galvanized Surfaces: SSPC-Paint 20, Type I - Inorganic, complying with VOC limitations of authorities having jurisdiction.

C. Water-Resistive Barrier: ICC-ES AC38 Grade D and 60-minute plastic sheet.

PART 3 EXECUTION

3.1 EXAMINATION

A. Verify that substrate surfaces are ready to receive work.

3.2 INSTALLATION OF STUDS

A. Install components in accordance with manufacturers' instructions and ASTM C1007 requirements.

B. Align floor and ceiling tracks; locate to wall layout. Secure in place with fasteners per Structural Drawings. Coordinate installation of sealant with floor and ceiling tracks.

C. Place studs at spacings per Structural Drawings; not more than 16 inches from abutting walls and at each side of openings. Connect studs to tracks using clip and tie method per drawings.

D. Construct corners using minimum of three studs. Install studs at wall openings per drawings.

E. Install load-bearing studs full length in one piece. Splicing of studs is not permitted.

F. Coordinate placement of insulation in multiple stud spaces made inaccessible after erection.

G. Install intermediate studs above and below openings to align with wall stud spacing.

H. Provide deflection allowance in stud track, directly below horizontal building framing at non-load bearing framing.

I. Attach cross studs to studs for attachment of fixtures anchored to walls.

J. Install framing between studs for attachment of mechanical and electrical items, and to prevent stud rotation.

K. Touch-up field welds and damaged galvanized surfaces with primer.

3.3 INSTALLATION OF JOISTS AND PURLINS

A. Install framing components in accordance with manufacturer's instructions.

B. Make provisions for erection stresses. Provide temporary alignment and bracing.

C. Place joists at spacings per drawings and connect joists to supports using fastener method.

D. Locate joist end bearing directly over load-bearing studs or provide load distributing member to top of stud track.

E. Provide web stiffeners at framing where required on drawings.

F. Touch-up field welds and damaged galvanized surfaces with primer.

3.4 INSTALLATION OF WALL SHEATHING

A. Install wall sheathing with long dimension perpendicular to wall studs, with ends over firm bearing and staggered, using self-tapping screws.
   1. Provide steel diagonal bracing at corners with foam insulation or gypsum board wall sheathing.
   2. Place water-resistive barrier horizontally over wall sheathing, weather lapping edges, and ends.

3.5 TOLERANCES

A. Maximum Variation from True Position: 1/2 inch.

B. Maximum Variation of any Member from Plane: 1/2 inch.

END OF SECTION

SECTION 055000 - METAL FABRICATIONS

PART 1 GENERAL

1.1 SECTION INCLUDES

A. Shop fabricated steel and aluminum items.

1.2 RELATED REQUIREMENTS

A. Section 033000 - Cast-in-Place Concrete: Placement of metal fabrications in concrete.

B. Section 042000 - Unit Masonry: Placement of metal fabrications in masonry.

C. Section 051200 - Structural Steel Framing: Structural steel column anchor bolts.

D. Section 052100 - Steel Joist Framing: Structural joist bearing plates, including anchorage.

E. Section 053100 - Steel Decking: Bearing plates for metal deck bearing, including anchorage.

F. Section 055100 - Metal Stairs.

G. Section 055133 - Metal Ladders.

H. Section 055213 - Pipe and Tube Railings.

1.3 REFERENCE STANDARDS

A. AAMA 611 - Voluntary Specification for Anodized Architectural Aluminum; 2020.

B. AAMA 2604 - Voluntary Specification, Performance Requirements and Test Procedures for High Performance Organic Coatings on Aluminum Extrusions and Panels (with Coil Coating Appendix); 2021.

C. AAMA 2605 - Voluntary Specification, Performance Requirements and Test Procedures for Superior Performing Organic Coatings on Aluminum Extrusions and Panels (with Coil Coating Appendix); 2020.

D. ASTM A36/A36M - Standard Specification for Carbon Structural Steel; 2019.

E. ASTM A53/A53M - Standard Specification for Pipe, Steel, Black and Hot-Dipped, Zinc-Coated, Welded and Seamless; 2020.

F. ASTM A123/A123M - Standard Specification for Zinc (Hot-Dip Galvanized) Coatings on Iron and Steel Products; 2017.

G. ASTM A153/A153M - Standard Specification for Zinc Coating (Hot-Dip) on Iron and Steel Hardware; 2016a.

H. ASTM A283/A283M - Standard Specification for Low and Intermediate Tensile Strength Carbon Steel Plates; 2018.

I. ASTM A307 - Standard Specification for Carbon Steel Bolts, Studs, and Threaded Rod 60 000 PSI Tensile Strength; 2021.

J. ASTM A501/A501M - Standard Specification for Hot-Formed Welded and Seamless Carbon Steel Structural Tubing; 2021.

K. ASTM A653/A653M - Standard Specification for Steel Sheet, Zinc-Coated (Galvanized) or Zinc-Iron Alloy-Coated (Galvannealed) by the Hot-Dip Process; 2020.

L. ASTM A1011/A1011M - Standard Specification for Steel, Sheet and Strip, Hot-Rolled, Carbon, Structural, High-Strength Low-Alloy, High-Strength Low-Alloy with Improved Formability, and Ultra-High Strength; 2018a.

M. ASTM B210/B210M - Standard Specification for Aluminum and Aluminum-Alloy Drawn Seamless Tubes; 2019a.

N. ASTM B211/B211M - Standard Specification for Aluminum and Aluminum-Alloy Rolled or Cold Finished Bar, Rod, and Wire; 2019.

O. ASTM B209/B209M - Standard Specification for Aluminum and Aluminum-Alloy Sheet and Plate; 2021a.

P. ASTM B221 - Standard Specification for Aluminum and Aluminum-Alloy Extruded Bars, Rods, Wire, Profiles, and Tubes; 2021.

Q. ASTM F3125/F3125M - Standard Specification for High Strength Structural Bolts and Assemblies, Steel and Alloy Steel, Heat Treated, Inch Dimensions 120 ksi and 150 ksi Minimum Tensile Strength, and Metric Dimensions 830 MPa and 1040 MPa Minimum Tensile Strength; 2021.

R. AWS A2.4 - Standard Symbols for Welding, Brazing, and Nondestructive Examination; 2020.

S. AWS D1.1/D1.1M - Structural Welding Code - Steel; 2020, with Errata (2021).

T. AWS D1.2/D1.2M - Structural Welding Code - Aluminum; 2014, with Errata (2020).

U. IAS AC172 - Accreditation Criteria for Fabricator Inspection Programs for Structural Steel AC172; 2019.

V. SSPC-Paint 15 - Steel Joist Shop Primer/Metal Building Primer; 2004.

W. SSPC-Paint 20 - Zinc-Rich Coating (Type I - Inorganic, and Type II - Organic); 2019.

X. SSPC-SP 2 - Hand Tool Cleaning; 2018.

1.4 SUBMITTALS

A. See Section 013000 - Administrative Requirements, for submittal procedures.

B. Shop Drawings: Indicate profiles, sizes, connection attachments, reinforcing, anchorage, size and type of fasteners, and accessories. Include erection drawings, elevations, and details where applicable.
   1. Indicate welded connections using standard AWS A2.4 welding symbols. Indicate net weld lengths.
   2. Design data: Submit drawings and supporting calculations, signed and sealed by a qualified professional structural engineer.
      a. Include the following, as applicable:
         1) Design criteria.
         2) Engineering analysis depicting stresses and deflections.
         3) Member sizes and gauges.
         4) Details of connections.

5) Support reactions.
6) Bracing requirements.

C. Designer's Qualification Statement.

D. Fabricator's Qualification Statement: Provide documentation showing steel fabricator is accredited under IAS AC172.

1.5 QUALITY ASSURANCE

A. Design shall be under direct supervision of a Professional Structural Engineer experienced in design of this work and licensed in Nevada.

B. Fabricator Qualifications: A qualified steel fabricator that is accredited by IAS AC172.

PART 2 PRODUCTS

2.1 MATERIALS - STEEL

A. Steel Sections: ASTM A36/A36M.

B. Steel Tubing: ASTM A501/A501M hot-formed structural tubing.

C. Plates: ASTM A283/A283M.

D. Pipe: ASTM A53/A53M, Grade B Schedule 40, black finish.

E. Slotted Channel Framing: ASTM A653/A653M, Grade 33.

F. Slotted Channel Fittings: ASTM A1011/A1011M.

G. Mechanical Fasteners: Same material as or compatible with materials being fastened; type consistent with design and specified quality level.

H. Bolts, Nuts, and Washers: ASTM A307, Grade A, plain.

I. Bolts, Nuts, and Washers: ASTM F3125/F3125M, Type 1, plain.

J. Welding Materials: AWS D1.1/D1.1M; type required for materials being welded.

K. Shop and Touch-Up Primer: SSPC-Paint 15, complying with VOC limitations of authorities having jurisdiction.

L. Touch-Up Primer for Galvanized Surfaces: SSPC-Paint 20, Type I - Inorganic, complying with VOC limitations of authorities having jurisdiction.

2.2 MATERIALS - ALUMINUM

A. Extruded Aluminum: ASTM B221 (ASTM B221M), 6063 alloy, T6 temper.

B. Sheet Aluminum: ASTM B209/B209M, 5052 alloy, H32 or H22 temper.

C. Aluminum-Alloy Drawn Seamless Tubes: ASTM B210/B210M, 6063 alloy, T6 temper.

D. Aluminum-Alloy Bars: ASTM B211/B211M, 6061 alloy, T6 temper.

E. Bolts, Nuts, and Washers: Steel, galvanized to ASTM A153/A153M.

F. Welding Materials: AWS D1.2/D1.2M; type required for materials being welded.

2.3 FABRICATION

A. Fit and shop assemble items in largest practical sections, for delivery to site.

B. Fabricate items with joints tightly fitted and secured.

C. Grind exposed joints flush and smooth with adjacent finish surface. Make exposed joints butt tight, flush, and hairline. Ease exposed edges to small uniform radius.

D. Exposed Mechanical Fastenings: Flush countersunk screws or bolts; unobtrusively located; consistent with design of component, except where specifically noted otherwise.

E. Furnish components required for anchorage of fabrications. Fabricate anchors and related components of same material and finish as fabrication, except where specifically noted otherwise.

2.4 FABRICATED ITEMS

A. Bollards: Steel pipe, concrete filled, crowned cap, as detailed; prime paint finish.

B. Joist Hangers: Strap anchors, fabricated with sheet steel, 18 gauge, 0.0478 inch minimum base metal thickness; galvanized finish.

C. Ledge Angles, Shelf Angles, Channels, and Plates Not Attached to Structural Framing: For support of metal decking; prime paint finish.

D. Lintels: As detailed; prime paint finish.

E. Door Frames for Overhead Door Openings and Wall Openings: Channel and Angle sections; prime paint finish.

F. Elevator Hoistway Divider Beams: Beam sections; prime paint finish.

G. Toilet Partition Suspension Members: Steel channel sections; prime paint finish.

H. Slotted Channel Framing: Fabricate channels and fittings from structural steel complying with the referenced standards; factory-applied, rust-inhibiting thermoset acrylic enamel finish.

2.5 FINISHES - STEEL

A. Prime paint steel items.
   1. Exceptions: Galvanize items to be embedded in concrete and items to be embedded in masonry.
   2. Exceptions: Do not prime surfaces in direct contact with concrete, where field welding is required, and items to be covered with sprayed fireproofing.

B. Prepare surfaces to be primed in accordance with SSPC-SP2.

C. Clean surfaces of rust, scale, grease, and foreign matter prior to finishing.

D. Prime Painting: One coat.

E. Galvanizing of Structural Steel Members: Galvanize after fabrication to ASTM A123/A123M requirements. Provide minimum 1.7 oz/sq ft galvanized coating.

F. Galvanizing of Non-structural Items: Galvanize after fabrication to ASTM A123/A123M requirements.

2.6 FINISHES - ALUMINUM

A. Exterior Aluminum Surfaces: Class I color anodized.

B. Interior Aluminum Surfaces: Class I natural anodized.

C. Class I Natural Anodized Finish: AAMA 611 AA-M12C22A41 Clear anodic coating not less than 0.7 mils thick.

D. Class I Color Anodized Finish: AAMA 611 AA-M12C22A42 Integrally colored anodic coating not less than 0.7 mils thick; light bronze.

E. Class I Color Anodized Finish: AAMA 611 AA-M12C22A44 Electrolytically deposited colored anodic coating not less than 0.7 mils thick; light bronze.

F. High Performance Organic Coating System: AAMA 2604 multiple coat, thermally cured fluoropolymer system; color as indicated.

G. Superior Performance Organic Coating System: AAMA 2605 multiple coat, thermally cured polyvinylidene fluoride system; color as indicated.

H. Apply one coat of bituminous paint to concealed aluminum surfaces in contact with cementitious or dissimilar materials.

2.7 FABRICATION TOLERANCES

A. Squareness: 1/8 inch maximum difference in diagonal measurements.

B. Maximum Offset Between Faces: 1/16 inch.

C. Maximum Misalignment of Adjacent Members: 1/16 inch.

D. Maximum Bow: 1/8 inch in 48 inches.

E. Maximum Deviation From Plane: 1/16 inch in 48 inches.

PART 3 EXECUTION

3.1 EXAMINATION

A. Verify that field conditions are acceptable and are ready to receive work.

3.2 PREPARATION

A. Clean and strip primed steel items to bare metal where site welding is required.

B. Furnish setting templates to the appropriate entities for steel items required to be cast into concrete or embedded in masonry.

3.3 INSTALLATION

A. Install items plumb and level, accurately fitted, free from distortion or defects.

B. Provide for erection loads, and for sufficient temporary bracing to maintain true alignment until completion of erection and installation of permanent attachments.

C. Field weld components as indicated on drawings.

D. Perform field welding in accordance with AWS D1.1/D1.1M.

E. Obtain approval prior to site cutting or making adjustments not scheduled.

F. After erection, prime welds, abrasions, and surfaces not shop primed, except surfaces to be in contact with concrete.

3.4 TOLERANCES

A. Maximum Variation From Plumb: 1/4 inch per story, non-cumulative.

B. Maximum Offset From True Alignment: 1/4 inch.

C. Maximum Out-of-Position: 1/4 inch.

END OF SECTION

SECTION 055133 - METAL LADDERS

PART 1 GENERAL

1.1 SECTION INCLUDES

A. Shop-fabricated metal ladders.

B. Prefabricated ladders.

1.2 RELATED REQUIREMENTS

1.3 REFERENCE STANDARDS

A. 29 CFR 1910.23 - Ladders; current edition.

B. 29 CFR 1926.1053 - Ladders; Current Edition.

C. ANSI A14.3 - American National Standard for Ladders -- Fixed -- Safety Requirements; 2008 (Reaffirmed 2018).

D. ASTM A123/A123M - Standard Specification for Zinc (Hot-Dip Galvanized) Coatings on Iron and Steel Products; 2017.

E. ASTM A36/A36M - Standard Specification for Carbon Structural Steel; 2019.

F. ASTM A53/A53M - Standard Specification for Pipe, Steel, Black and Hot-Dipped, Zinc-Coated, Welded and Seamless; 2020.

G. ASTM A283/A283M - Standard Specification for Low and Intermediate Tensile Strength Carbon Steel Plates; 2018.

H. ASTM A501/A501M - Standard Specification for Hot-Formed Welded and Seamless Carbon Steel Structural Tubing; 2021.

I. ASTM B211/B211M - Standard Specification for Aluminum and Aluminum-Alloy Rolled or Cold Finished Bar, Rod, and Wire; 2019.

J. ASTM F3125/F3125M - Standard Specification for High Strength Structural Bolts and Assemblies, Steel and Alloy Steel, Heat Treated, Inch Dimensions 120 ksi and 150 ksi Minimum Tensile Strength, and Metric Dimensions 830 MPa and 1040 MPa Minimum Tensile Strength; 2021.

K. AWS A2.4 - Standard Symbols for Welding, Brazing, and Nondestructive Examination; 2020.

L. AWS B2.1/B2.1M - Specification for Welding Procedure and Performance Qualification; 2014, with Amendment (2015).

M. AWS D1.1/D1.1M - Structural Welding Code - Steel; 2020, with Errata (2021).

N. AWS D1.2/D1.2M - Structural Welding Code - Aluminum; 2014, with Errata (2020).

O. IAS AC172 - Accreditation Criteria for Fabricator Inspection Programs for Structural Steel AC172; 2019.

P. SSPC-Paint 15 - Steel Joist Shop Primer/Metal Building Primer; 2004.

Q. SSPC-Paint 20 - Zinc-Rich Coating (Type I - Inorganic, and Type II - Organic); 2019.

R. SSPC-SP 2 - Hand Tool Cleaning; 2018.

1.4 SUBMITTALS

A. See Section 013300 - Submittal Requirements, for submittal procedures.

B. Shop Drawings:
   1. Indicate profiles, sizes, connection attachments, reinforcing, anchorage, size and type of fasteners, and accessories. Include erection drawings, elevations, and details where applicable.
   2. Indicate welded connections using standard AWS A2.4 welding symbols. Indicate net weld lengths.

C. Welders' Qualification Statement: Welders' certificates in accordance with AWS B2.1/B2.1M and dated no more than 12 months before start of scheduled welding work.

D. Designer's Qualification Statement.

E. Fabricator's Qualification Statement: Provide documentation showing steel fabricator is accredited under IAS AC172.

1.5 QUALITY ASSURANCE

A. Design shall be under direct supervision of a Professional Structural Engineer experienced in design of this work and licensed in Nevada.

B. Welder Qualifications: Welding processes and welding operators qualified in accordance with AWS D1.1/D1.1M and AWS D1.2/D1.2M and dated no more than 12 months before start of scheduled welding work.

C. Fabricator Qualifications: A qualified steel fabricator that is accredited by IAS AC172.

PART 2 PRODUCTS

2.1 MATERIALS - STEEL

A. Steel Sections: ASTM A36/A36M.

B. Steel Tubing: ASTM A501/A501M hot-formed structural tubing.

C. Plates: ASTM A283/A283M.

D. Pipe: ASTM A53/A53M, Grade B Schedule 40, black finish.

E. Mechanical Fasteners: Same material or compatible with materials being fastened; type consistent with design and specified quality level.

F. Bolts, Nuts, and Washers: ASTM F3125/F3125M, Type 1, plain.

G. Welding Materials: AWS D1.1/D1.1M; type required for materials being welded.

H. Shop and Touch-Up Primer: SSPC-Paint 15, complying with VOC limitations of authorities having jurisdiction.

I. Touch-Up Primer for Galvanized Surfaces: SSPC-Paint 20, Type I - Inorganic, complying with VOC limitations of authorities having jurisdiction.

2.2 FABRICATION

A. Fit and shop assemble items in largest practical sections, for delivery to site.

B. Fabricate items with joints tightly fitted and secured.

C. Continuously seal joined members by intermittent welds and plastic filler.

D. Grind exposed joints flush and smooth with adjacent finish surface. Make exposed joints butt tight, flush, and hairline. Ease exposed edges to small uniform radius.

E. Supply components required for anchorage of fabrications. Fabricate anchors and related components of same material and finish as fabrication, except where specifically noted otherwise.

2.3 FABRICATED LADDERS

A. Ladders: Steel; in compliance with ANSI A14.3; with mounting brackets and attachments; prime paint finish.
   1. Side Rails: 3/8 by 2 inches members spaced at 20 inches.
   2. Rungs: One inch diameter solid round bar spaced 12 inches on center.
   3. Space rungs 7 inches from wall surface.

2.4 PREFABRICATED LADDERS

A. Prefabricated Ladder: Welded metal unit complying with ANSI A14.3; factory fabricated to greatest degree practical and in the largest components possible.
   1. Components: Manufacturer's standard rails, rungs, treads, handrails. returns, platforms and safety devices complying with the requirements of the MATERIALS article of this section.
   2. Materials: Aluminum; ASTM B211/B211M, 6063 alloy, T52 temper.
   3. Finish: Mill finish aluminum.
   4. Manufacturers:
      a. O'Keeffe's Inc: Model 531: www.okeeffes.com/#sle.

2.5 FINISHES - STEEL

A. Prime paint steel items.
   1. Do not prime surfaces in direct contact with concrete.
   2. Do not prime surfaces where field welding is required.

B. Prepare surfaces to be primed in accordance with SSPC-SP2.

C. Clean surfaces of rust, scale, grease, and foreign matter prior to finishing.

D. Prime Painting: One coat.

E. Galvanizing of Structural Steel Members: Galvanize after fabrication to ASTM A123/A123M requirements. Provide minimum 1.7 oz/sq ft galvanized coating.

F. Galvanizing of Non-structural Items: Galvanize after fabrication to ASTM A123/A123M requirements.

2.6 FABRICATION TOLERANCES

A. Squareness: 1/8 inch maximum difference in diagonal measurements.

B. Maximum Offset Between Faces: 1/16 inch.

C. Maximum Misalignment of Adjacent Members: 1/16 inch.

D. Maximum Bow: 1/8 inch in 48 inches.

E. Maximum Deviation From Plane: 1/16 inch in 48 inches.

PART 3 EXECUTION

3.1 EXAMINATION

A. Verify that field conditions are acceptable and are ready to receive work.

3.2 PREPARATION

A. Clean and strip primed steel items to bare metal where site welding is required.

B. Supply setting templates to the appropriate entities for steel items required to be cast into concrete or embedded in masonry.

3.3 INSTALLATION

A. Install items plumb and level, accurately fitted, free from distortion or defects.

B. Provide for erection loads, and for sufficient temporary bracing to maintain true alignment until completion of erection and installation of permanent attachments.

C. Obtain approval prior to site cutting or making adjustments not scheduled.

END OF SECTION

SECTION 061000 - ROUGH CARPENTRY

PART 1 GENERAL

1.1 SECTION INCLUDES

A. Sheathing.

B. Communications and electrical room mounting boards.

C. Concealed wood blocking, nailers, and supports.

1.2 RELATED REQUIREMENTS

A. Section 055000 - Metal Fabrications: Miscellaneous steel connectors and support angles for wood framing.

B. Section 061753 - Shop-Fabricated Wood Trusses.

C. Section 072500 - Weather Barriers: Water-resistive barrier over sheathing.

D. Section 076200 - Sheet Metal Flashing and Trim: Sill flashings.

E. Section 092116 - Gypsum Board Assemblies: Gypsum-based sheathing.

1.3 REFERENCE STANDARDS

A. ANSI A208.1 - American National Standard for Particleboard; 2016.

B. ASTM A153/A153M - Standard Specification for Zinc Coating (Hot-Dip) on Iron and Steel Hardware; 2016a.

C. ASTM E84 - Standard Test Method for Surface Burning Characteristics of Building Materials; 2021a.

D. ASTM G21 - Standard Practice for Determining Resistance of Synthetic Polymeric Materials to Fungi; 2015, with Editorial Revision (2021).

E. AWPA U1 - Use Category System: User Specification for Treated Wood; 2021.

F. ICC (IBC) - International Building Code; Most Recent Edition Adopted by Authority Having Jurisdiction, Including All Applicable Amendments and Supplements.

G. ICC (IECC) - International Energy Conservation Code; Most Recent Edition Adopted by Authority Having Jurisdiction, Including All Applicable Amendments and Supplements.

H. PS 1 - Structural Plywood; 2009 (Revised 2019).

I. PS 2 - Performance Standard for Wood Structural Panels; 2018.

J. PS 20 - American Softwood Lumber Standard; 2021.

K. WWPA G-5 - Western Lumber Grading Rules; 2021.

1.4 SUBMITTALS

A. See Section 013000 - Administrative Requirements for submittal procedures.

B. Product Data: Provide technical data on insulated sheathing, wood preservative materials, and application instructions.

C. Structural Composite Lumber: Submit manufacturer's published structural data including span tables, marked to indicate which sizes and grades are being used; if structural composite lumber is being substituted for dimension lumber or timbers, submit grading agency structural tables marked for comparison.

D. Manufacturer's Certificate: Certify that wood products supplied for rough carpentry meet or exceed specified requirements.

E. Warranty Documentation: Submit manufacturer warranty and ensure that forms have been completed in Owner's name and registered with manufacturer.

1.5 DELIVERY, STORAGE, AND HANDLING

A. General: Cover wood products to protect against moisture. Support stacked products to prevent deformation and to allow air circulation.

B. Fire Retardant Treated Wood: Prevent exposure to precipitation during shipping, storage, and installation.

1.6 WARRANTY

A. See Section 017800 - Closeout Procedures and Submittals for additional warranty requirements.

B. Correct defective work within a two-year period commencing on Date of Substantial Completion.

C. Manufacturer Warranty: Provide two-year manufacturer warranty for _____ commencing on Date of Substantial Completion.

PART 2 PRODUCTS

2.1 GENERAL REQUIREMENTS

A. Dimension Lumber: Comply with PS 20 and requirements of specified grading agencies.
   1. Species: Douglas Fir-Larch, unless otherwise indicated.
   2. If no species is specified, provide species graded by the agency specified; if no grading agency is specified, provide lumber graded by grading agency meeting the specified requirements.
   3. Grading Agency: Grading agency whose rules are approved by the Board of Review, American Lumber Standard Committee at www.alsc.org, and who provides grading service for the species and grade specified; provide lumber stamped with grade mark unless otherwise indicated.
   4. Lumber of other species or grades is acceptable provided structural and appearance characteristics are equivalent to or better than products specified.

2.2 DIMENSION LUMBER FOR CONCEALED APPLICATIONS

A. Grading Agency: Western Wood Products Association; WWPA G-5.

B. Sizes: Nominal sizes as indicated on drawings, S4S.

C. Moisture Content: S-dry or MC19.

D. Miscellaneous Framing, Blocking, Nailers, Grounds, and Furring:
   1. Lumber: S4S, No. 2 or Standard Grade.
   2. Boards: Standard or No. 3.

2.3 STRUCTURAL COMPOSITE LUMBER

A. At Contractor's option, structural composite lumber may be substituted for concealed dimension lumber and timbers.

B. Structural Composite Lumber: Factory fabricated beams, headers, and columns, of sizes and types indicated on drawings; structural capacity as published by manufacturer.

2.4 CONSTRUCTION PANELS

A. All sheathing shall conform to APA Standards and U.S. Product Standard PS-1. All pieces shall be grade stamped.

B. Roof Sheathing: Any PS 1 type, rated Structural I Sheathing.
   1. Roof sheathing shall be 23/32 inch, APA rated sheathing 48/24, tongue and groove.
   2. Bond Classification: Exposure 1.
   3. Span Rating: ___.
   4. Performance Category: ___ PERF CAT.

C. Wall Sheathing: Any PS 1 type.
   1. Wall sheathing shall be 19/32 inch APA rated sheathing 40/20.
   2. Bond Classification: Exposure 1.
   3. Grade: Structural I Sheathing.
   4. Span Rating: _____ inch.
   5. Performance Category: _____ PERF CAT.
   6. Edge Profile: Square edge.

D. Wall Sheathing: Particleboard, ANSI A208.1, Grade M-3 EXTERIOR GLUE.

E. Wall Sheathing: See Section 092116.

F. Soffit sheathing shall be 15/32 inch, Exposure I, durability classification.

G. Communications and Electrical Room Mounting Boards: PS 1 A-D plywood, or medium density fiberboard; 3/4 inch thick; flame spread index of 25 or less, smoke developed index of 450 or less, when tested in accordance with ASTM E84.

H. Other Applications:
   1. Plywood Concealed From View But Located Within Exterior Enclosure: PS 1, C-C Plugged or better, Exterior grade.
   2. Plywood Exposed to View But Not Exposed to Weather: PS 1, A-D, or better.
   3. Other Locations: PS 1, C-D Plugged or better.

2.5 ACCESSORIES

A. Fasteners and Anchors:
   1. Metal and Finish: Hot-dipped galvanized steel complying with ASTM A153/A153M for high humidity and preservative-treated wood locations, unfinished steel elsewhere.

2. Drywall Screws: Bugle head, hardened steel, power driven type, length three times thickness of sheathing.
3. Anchors: Toggle bolt type for anchorage to hollow masonry.

B. Sill Gasket on Top of Foundation Wall: 1/4 inch thick, plate width, closed cell plastic foam from continuous rolls.

C. Sill Flashing: See Section 076200.

D. Water-Resistive Barrier: See Section 072500.

2.6 FACTORY WOOD TREATMENT

A. Treated Lumber and Plywood: Comply with requirements of AWPA U1 - Use Category System for wood treatments determined by use categories, expected service conditions, and specific applications.
1. Fire-Retardant Treated Wood: Mark each piece of wood with producer's stamp indicating compliance with specified requirements.

PART 3 EXECUTION

3.1 PREPARATION

A. Where wood framing bears on cementitious foundations, install full width sill flashing continuous over top of foundation, lap ends of flashing minimum of 4 inches and seal.

B. Install sill gasket under sill plate of framed walls bearing on foundations; puncture gasket cleanly to fit tightly around protruding anchor bolts.

C. Coordinate installation of rough carpentry members specified in other sections.

3.2 INSTALLATION - GENERAL

A. Select material sizes to minimize waste.

B. Reuse scrap to the greatest extent possible; clearly separate scrap for use on site as accessory components, including: shims, bracing, and blocking.

C. Where treated wood is used on interior, provide temporary ventilation during and immediately after installation sufficient to remove indoor air contaminants.

3.3 BLOCKING, NAILERS, AND SUPPORTS

A. Provide framing and blocking members as indicated or as required to support finishes, fixtures, specialty items, and trim.

B. In framed assemblies that have concealed spaces, provide solid wood fireblocking as required by applicable local code, to close concealed draft openings between floors and between top story and roof/attic space; other material acceptable to authorities having jurisdiction may be used in lieu of solid wood blocking.

C. In metal stud walls, provide continuous blocking around door and window openings for anchorage of frames, securely attached to stud framing.

D. In walls, provide blocking attached to studs as backing and support for wall-mounted items, unless item can be securely fastened to two or more studs or other method of support is explicitly indicated.

E. Where ceiling-mounting is indicated, provide blocking and supplementary supports above ceiling, unless other method of support is explicitly indicated.

F. Provide the following specific nonstructural framing and blocking:
   1. Cabinets and shelf supports.
   2. Wall brackets.
   3. Handrails.
   4. Grab bars.
   5. Towel and bath accessories.
   6. Wall-mounted door stops.
   7. Chalkboards and marker boards.
   8. Wall paneling and trim.
   9. Joints of rigid wall coverings that occur between studs.

3.4 ROOF-RELATED CARPENTRY

A. Coordinate installation of roofing carpentry with deck construction, framing of roof openings, and roofing assembly installation.

B. Provide wood curb at each roof opening except where prefabricated curbs are specified and where specifically indicated otherwise; form corners by alternating lapping side members.

3.5 INSTALLATION OF CONSTRUCTION PANELS

A. Roof Sheathing: Secure panels with long dimension perpendicular to framing members, with ends staggered and over firm bearing.
   1. At long edges use sheathing clips where joints occur between roof framing members.
   2. Nail panels to framing; staples are not permitted.

B. Wall Sheathing: Secure with long dimension perpendicular to wall studs, with ends over firm bearing and staggered, using nails, screws, or staples.
   1. Use plywood or other acceptable structural panels at building corners, for not less than 96 inches, measured horizontally.
   2. Provide inlet diagonal bracing at corners.
   3. Place water-resistive barrier horizontally over wall sheathing, weather lapping edges and ends.

C. Communications and Electrical Room Mounting Boards: Secure with screws to studs with edges over firm bearing; space fasteners at maximum 24 inches on center on all edges and into studs in field of board.
   1. At fire-rated walls, install board over wall board indicated as part of the fire-rated assembly.
   2. Where boards are indicated as full floor-to-ceiling height, install with long edge of board parallel to studs.
   3. Install adjacent boards without gaps.
   4. Size and Location: As indicated on drawings.

D. Wall Sheathing and Roof Sheathing with Laminated Water-Resistive Barrier and Air Barrier: Secure to studs in accordance with manufacturer's installation instructions.

1. Install with laminated water-resistive and air barrier on exterior side of sheathing.
2. Do not bridge building expansion joints; cut and space edges of panels to match spacing of structural support elements.
3. Use only mechanically attached and drainable EIFS and exterior insulation with wall sheathing with laminated water-resistive and air barrier.
4. Apply manufacturer's standard seam tape to joints between sheathing panels; use tape gun or hard rubber roller in accordance with manufacturer's installation instructions.

3.6 TOLERANCES

A. Framing Members: 1/4 inch from true position, maximum.

B. Surface Flatness of Floor: 1/8 inch in 10 feet maximum, and 1/4 inch in 30 feet maximum.

C. Variation from Plane, Other than Floors: 1/4 inch in 10 feet maximum, and 1/4 inch in 30 feet maximum.

3.7 FIELD QUALITY CONTROL

A. See Section 014000 - Quality Requirements for additional requirements.

3.8 CLEANING

A. Waste Disposal: See Section 017419 - Construction Waste Management and Disposal.
   1. Comply with applicable regulations.
   2. Do not burn scrap on project site.
   3. Do not burn scraps that have been pressure treated.
   4. Do not send materials treated with pentachlorophenol, CCA, or ACA to co-generation facilities or “waste-to-energy” facilities.

B. Do not leave wood, shavings, sawdust, etc. on the ground or buried in fill.

C. Prevent sawdust and wood shavings from entering the storm drainage system.

END OF SECTION

SECTION 064100 - ARCHITECTURAL WOOD CASEWORK

PART 1 GENERAL

1.1 SECTION INCLUDES

A. Hardware.

B. Preparation for installing utilities.

C. Plastic Laminate.

D. Other furnishing and decorative items as indicated on Drawings and Material Schedule.

1.2 RELATED REQUIREMENTS

A. Section 061000 - Rough Carpentry: Support framing, grounds, and concealed blocking.

B. Section 066116 - Solid Surfacing Fabrications: Solid polymer fabrications.

1.3 REFERENCE STANDARDS

A. ASTM E84 - Standard Test Method for Surface Burning Characteristics of Building Materials; 2021a.

B. AWI (QCP) - Quality Certification Program; Current Edition.

C. GSA CID A-A-1936 - Adhesives, Contact, Neoprene Rubber; 1996a (Validated 2013).

D. NEMA LD 3 - High-Pressure Decorative Laminates; 2005.

1.4 ADMINISTRATIVE REQUIREMENTS

A. Preinstallation Meeting: Convene a preinstallation meeting not less than one week before starting work of this section; require attendance by all affected installers.

1.5 SUBMITTALS

A. See Section 013000 - Submittal Requirements, for submittal procedures.

B. Shop Drawings: Indicate materials, component profiles, fastening methods, jointing details, and accessories.
   1. Scale of Drawings: 1-1/2 inch to 1 foot, minimum.
   2. Provide the information required by AWI/AWMAC/WI (AWS).
   3. Include certification program label.

C. Product Data: Provide data for hardware accessories.
   1. Adhesive manufacturer’s product data for each adhesive used indicating that the adhesive contains no urea formaldehyde.

D. Provide UL approved identification on fire retardant treated material.

E. Samples: Submit actual samples of architectural cabinet construction, minimum 12 inches square, illustrating proposed cabinet, countertop, and shelf unit substrate and finish.

F. Samples: Submit actual sample items of proposed pulls, hinges, shelf standards, and locksets, demonstrating hardware design, quality, and finish.

1.6 QUALITY ASSURANCE

A. Fabricator Qualifications: Company specializing in fabricating the products specified in this section with minimum 10 years of documented experience.
   1. Company with at least one project in the past 5 years with value of woodwork within 20 percent of cost of woodwork for this Project.

B. Single-Source Responsibility for Fabrication and Installation: Engage qualified woodworking firm to assume undivided responsibility for fabricating, finishing, and installing woodwork specified in this Section.

C. Quality Certification:
   1. Provide labels or certificates indicating that the installed work complies with AWI/AWMAC/WI (AWS) requirements for grade or grades specified.
   2. Replace, repair, or rework all work for which certification is refused.

D. Regulatory Requirements:
   1. Flame Spread Index: Where fire-retardant treated wood is specified or required by IBC Chapter 8 requirements, provide materials that have been tested in accordance with ASTM E84 by a testing and inspecting agency acceptable to authorities having jurisdiction.
   2. Fire-retardant treated materials shall be identified with appropriate classification markings indicating rating on surfaces that will be concealed from view in the finished work or by separate removable label applied by the treated wood Manufacturer.

1.7 DELIVERY, STORAGE, AND HANDLING

A. Packing and Shipping: Deliver materials to site in Manufacturer's original unopened packaging with labels intact.

B. Storage: Adequately protect against damage and moisture while stored at the site.

C. Handling: Comply with Manufacturer's instructions.

D. Protect units from moisture damage.

1.8 FIELD CONDITIONS

A. During and after installation of custom cabinets, maintain temperature and humidity conditions in building spaces at same levels planned for occupancy.

B. Verify that field measurements are as indicated on Shop Drawings.

PART 2 PRODUCTS

2.1 MANUFACTURERS

A. Single Source Responsibility: Provide and install this work from single fabricator.

2.2 CABINETS

A. Quality Standard: Custom Grade, in accordance with AWI/AWMAC/WI (AWS), unless noted otherwise.

B. Plastic Laminate Faced Cabinets: Custom grade.

2.3 WOOD-BASED COMPONENTS

A. Wood fabricated from old growth timber is not permitted.

B. Medium Density Fiberboard: Pressed wood fiber with resin binder [standard] grade, 3/4 inch (20 mm) thick, with melamine laminate on each side.

C. Hardwood Lumber: Select hardwood lumber to meet the AWS Section 6 requirements for Premium or Custom Grade as specified, average moisture content of 6 percent; and as follows:
   1. Species and Cut: As indicated on Drawings and Material Schedule.

D. Hardwood Plywood: Core materials of particleboard, lumber, or MDF, type of glue recommended for application.

E. Birch Plywood: Type II Glue; Grade B where visible on the exterior of the cabinet, Grade BB at cabinet interior locations

2.4 WOOD TREATMENT PROCESS

A. Fire-Retardant Treatment:
   1. All architectural woodwork used in the interior of the building shall be fire retardant treated, except where allowed otherwise by Code.
   2. Fire Retardant: Chemically treated and pressure impregnated; capable of providing flame spread/smoke developed ratings as follows and in accordance with ASTM E84 and as defined by IBC Chapter 8 requirements.
      a. Interior Wall and Ceiling Finishes:
         1) Vertical Exits, Exit Access Corridors, Exit Passageways and Other Exitways: Class "B" (26-75) flame spread index, 0-450 smoke developed.
         2) Rooms and Enclosed Spaces: Class "C" (76-200) flame spread index, 0-450 smoke developed.
      b. Trim (moldings, chair rails, baseboards, handrails, wood door and window frames, and similar decorative items):
         1) All Areas: Class "C" 76-200 flame spread, 0-450 smoke developed.
   3. Where wood is indicated to be clear finished or stained, do not used fireretardant treatment with colorants, that would bleed through the finish, or that would otherwise adversely affect finish.

2.5 LAMINATE MATERIALS

A. Manufacturers:
   1. Formica Corporation: www.formica.com/#sle.
   2. Nevamar: www.nevamar.com
   3. Panolam Industries International, Inc; Nevamar: www.nevamar.com.
   4. Wilsonart: www.wilsonart.com.
   5. Other manufacturers specifically noted in Drawings and Material Schedule.
   6. Substitutions: 016310 - Translucent Sandwich Panel Skylights.

B. High Pressure Decorative Laminate (HPDL): NEMA LD 3, types as recommended for specific applications.

C. Provide specific types as indicated.

1. Finishes, colors, patterns and textures as indicated on the Drawings and Material Schedule, or as indicated on the drawings or selected by the Architect.
2. Laminate Backer: BKL, 0.020 inch nominal thickness, undecorated; for application to concealed backside of panels faced with high pressure decorative laminate.

2.6 COUNTERTOPS

A. Refer to Section 066116 - Solid Surfacing Fabrications.

B. Colors, Patterns, and Finishes:
   1. As indicated on Drawings and Material Schedules.

2.7 ACCESSORIES

A. Adhesive: Type recommended to meet AWS Adhesive Guidelines.
   1. All adhesive to be formaldehyde free/low VOC in fabrication of all casework.

B. Wall Adhesive: Cartridge type compatible with paneling and wall substrate.

C. Fasteners: Size and type to suit application. Inc conformance with WIC Laboratory grade.

D. Bolts, Nuts, Washers, Lags, Pins, and Screws: Of size and type to suit application; galvanized or chrome-plated finish in concealed locations and stainless steel or chrome-plated finish in exposed locations.

E. Concealed Joint Fasteners: Threaded steel. In conformance with WIC Laboratory grade.

F. Grommets: Standard plastic, painted metal, or rubber grommets for cut-outs, in color to match adjacent surface.

2.8 SHOP TREATMENT OF WOOD MATERIALS

A. Provide UL approved identification on fire retardant treated material at or before time of installation

B. Deliver fire retardant treated materials cut to required sizes. Minimize field cutting.

2.9 FABRICATION

A. Fabricate architectural woodwork and cabinets in conformance with AWI Premium Grade.

B. Exposed fasteners are not allowed in the finish Work on exposed and semi-exposed surfaces of the case goods.

C. Assembly: Shop assemble cabinets for delivery to site in units easily handled and to permit passage through building openings.

D. Edging: Fit shelves, doors, and exposed edges with specified edging or with material to match face species if not otherwise specified. Edgebanding shall be adhered with PUR or Type 2 Aliphatic Resin Do not use more than one piece for any single length.

E. Shelves: Fabricate shelves with 3/4 inch thick, formaldehyde free MDF or plywood cores, unless otherwise indicated.
   1. Laminate, Shelves within Casework: Melamine, thermally fused, PVC edge banding at all adjustable shelf edges, unless otherwise indicated.
   2. Shelf Supports: 32 mm system holes or as indicated on the Drawings.

F. Drawer Boxes: Fabricate drawer boxes from Birch plywood. Biscuit or blind dowel drawer boxes. Exposed faasteners are unacceptable.
   1. Fabricate sides and back from minimum 1/2 inch (9-ply) plywood.
   2. Fabricate bottoms from minimum 3/8 inch (7-ply) plywood.

G. Fitting: When necessary to cut and fit on site, provide materials with ample allowance for scribing. Scribe tolerance is 1/32" max. Scribe trim is not acceptable.

H. Door and Drawer Fronts: 3/4 inch, or as shown on Drawings, flush overlay style..

I. Semi-exposed Surfaces (Interior surfaces of wood and plastic laminate casework): Melamine, thermally fused.
   1. Color: Black.

J. Plastic Laminate: Apply plastic laminate finish in full uninterrupted sheets consistent with manufactured sizes. Fit corners and joints hairline; secure with concealed fasteners. Slightly bevel arises. Locate counter butt joints minimum 2 feet from sink cut-outs.
   1. Apply laminate backing sheet to reverse side of plastic laminate finished surfaces.
   2. Cap exposed plastic laminate finish edges with material of same finish and pattern.
   3. Edge Treatment: As detailed.

K. Mechanically fasten back splash to countertops as recommended by laminate manufacturer at 16 inches on center.

L. When necessary to cut and fit on site, provide materials with ample allowance for cutting and scribing to walls.

M. Provide cutouts for plumbing fixtures. Verify locations of cutouts from on-site dimensions. Seal cut edges. Extend J-boxes as required by NEC.

2.10 SHOP FINISHING

A. Sand work smooth and set exposed nails and screws.

B. For opaque finishes, apply wood filler in exposed nail and screw indentations and sand smooth.

C. On items to receive transparent finishes, use wood filler matching or blending with surrounding surfaces and of types recommended for applied finishes.

D. Finish work in accordance with AWI/AWMAC/WI Architectural Woodwork Standards, Section 5 - Finishing for Grade specified or as otherwise indicated on Drawings and as follows:
   1. Transparent:
      a. System - 12, Polyurethane, Water-based.
      b. Stain: As selected by Architect.
      c. Sheen: Satin.
      d. Products:
   2. Opaque:
      a. System - 12, Polyurethane, Water-based.
      b. Color: As selected by Architect.
      c. Sheen: Satin.
      d. Products:

E. Seal surfaces in contact with cementitious materials.

PART 3 EXECUTION

3.1 EXAMINATION

A. Verify adequacy of backing and support framing.

B. Verify location and sizes of utility rough-in associated with work of this section.

C. Coordination: Coordinate with other Work which affects, connects with, or will be concealed by this Work.

3.2 INSTALLATION

A. Install work in accordance with AWI/AWMAC/WI (AWS) requirements for grade indicated.

B. Set and secure custom cabinets in place, assuring that they are rigid, plumb, and level. Shim as required with concealed shims. Install to tolerance of 1/8-inch in 96-inches for plumb and level (including tops).

C. Use fixture attachments in concealed locations for wall mounted components.

D. Use concealed joint fasteners to align and secure adjoining cabinet units.

E. Carefully scribe casework abutting other components, with maximum gaps of 1/32 inch. Do not use additional overlay trim for this purpose. Refinish cut surfaces or repair damaged finish at cuts.

F. Secure cabinets to floor using appropriate angles and anchorages.

G. Countersink anchorage devices at exposed locations. Conceal with solid wood plugs of species to match surrounding wood; finish flush with surrounding surfaces. When exposed fastening is required to complete installation, exposed fasteners shall be set in quirks, reveals, and reliefs (to be least visible when installation iscomplete).

H. Install trim in single lengths without splices where possible.
   1. Splices should be cut at a 22.5 degree angle. Miter external corners and cope internal corners.
   2. Where blind nailing is not possible, drill pilot holes at locations best hidden in finished work.
   3. Use only finish or casing nails. Set nails for putty stopping in surfaced members

3.3 FIELD FINISHING

A. Field finish Architectural Woodwork indicated to have a painted finish.
   1. Sand Work smooth.
   2. Prime, fill, and finish Work of this Section in accordance with Section 099000 - Painting and Coating.

3.4 ADJUSTING

A. Test installed work for rigidity and ability to support loads.

B. Adjust moving or operating parts to function smoothly and correctly.

C. Repair damaged and defective woodwork where possible to eliminate functional and visual defects; where not possible to repair, replace woodwork. Adjust joinery for uniform appearance.

D. Clean, lubricate, and adjust hardware

3.5 CLEANING

A. Clean casework, counters, shelves, hardware, fittings, and fixtures.

B. During the course of the Work and on completion, remove and dispose of excess materials, equipment and debris away from premises. Leave Work in clean condition.

3.6 PROTECTION

A. Provide final protection and maintain conditions, in a manner acceptable to Owner that ensures that woodwork is without damage or deterioration at time of Substantial Completion.

END OF SECTION

SECTION 066113 - SOLID SURFACE SHEET WALL PANELING

PART 1 – GENERAL

1.1 SECTION INCLUDES

A. Solid Surface sheet shower wall paneling.

B. Panel accessories.

1.2 REFERENCE STANDARDS

A. ASTM E84 - Standard Test Method for Surface Burning Characteristics of Building Materials; 2021a.

B. ASTM G21 - Standard Practice for Determining Resistance of Synthetic Polymeric Materials to Fungi; 2015, with Editorial Revision (2021).

C. ISFA 2-01 - Classification and Standards for Solid Surfacing Material; 2013.

1.3 SYSTEM DESCRIPTION

A. Provide solid surface sheet that conforms to the following requirements of regulatory agencies and the quality control of Inpro® Corporation.
   1. Fungal and Bacterial Resistance: Solid Surface Sheet wall panelingthat does not support fungal or bacterial growth as tested in accordance with ASTM G21.
   2. Fire Performance Characteristics: Solid Surface Sheet wall panelingconforming to the NFPA class A fire rating as determined by ASTM E84.

1.4 SUBMITTALS

A. See Section 013300 - Submittal Requirements, for submittal procedures.

B. Shop Drawings: Indicate dimensions, thicknesses, required clearances, tolerances, materials, colors, finishes, fabrication details, field jointing, adjacent construction, methods of support, integration of plumbing components, and anchorages.

C. Product Data: Manufacturer’s printed product data for each type of sheet specified. Provide data on specified component products and connection requirements.

D. Samples: Submit two samples representative of shower wall paneling, 6 x 6 inch in size, illustrating color, texture, and finish.

E. Manufacturer's Installation Instructions: Indicate preparation of opening required, rough-in sizes; tolerances for item placement, temporary bracing of components.

F. Maintenance Data: Indicate list of approved cleaning materials and procedures required; list of substances that are harmful to the component materials.
   1. Include instructions for stain removal, surface and gloss restoration.

G. Warranty Documentation: Submit manufacturer warranty and ensure that forms have been completed in Owner's name and registered with manufacturer.

H. Maintenance Materials: Furnish the following for Owner's use in maintenance of project.
   1. See Section 016000 - Product Requirements, for additional provisions.

1.5 QUALITY ASSURANCE

A. Manufacturer Qualifications: Company specializing in manufacturing the products specified in this section with minimum ten years of documented experience.

B. Fabricator/Installer Qualifications:
   1. Certified or approved by the Manufacturer.
   2. Have adequate physical facilities and sufficient production capacity to produce, transport, deliver, and install the required units without causing delay in the work.
   3. Have a minimum of 5 years of fabrication experience.

C. Fire-Test-Response Characteristics: Provide solid surfacing fabrications with the following surface-burning characteristics as determined by testing identical products per ASTM E84 by UL 723 or another testing and inspecting agency acceptable to authorities having jurisdiction:
   1. Flame-Spread Index: 25 or less.
   2. Smoke-Developed Index: 450 or less.

1.6 DELIVERY STORAGE AND HANDLING

A. Deliver materials in unopened factory packaging to the jobsite.

B. Inspect materials at delivery to assure that specified products have been received.

C. Handle products to prevent damage to edges, ends, or surfaces.

D. Store in original packaging in an interior climate controlled location away from direct sunlight.

1.7 PROJECT CONDITIONS

A. Environmental Requirements: Products must be installed in an interior climate controlled environment.

1.8 WARRANTY

A. See Section 017836 - Warranties and Bonds, for additional warranty requirements.

B. Correct defective Work within a five year period after Date of Substantial Completion.

C. Standard Manufacturer Solid Surface Limited 10 Year Warranty against material and manufacturing defects.

PART 2 – PRODUCTS

2.1 MANUFACTURER

A. Basis of Design Manufacturer: Inpro® Corporation: PO Box 406 Muskego, WI 53150 USA, Telephone: 800.222.5556, Fax: 888.715.8407, www.inprocorp.com.

B. Acceptable Manufacturers
   1. Fibo USA: www.fibosystemusa.com, 707-628-5996
   2. Or Approved Equal.

C. Substitutions: 012500 - Substitution Procedures.

2.2 MANUFACTURED UNITS

A. Basis of Design Product: Solid Surface: BioPrism® Solid Surface material shall be manufactured from polyester/acrylic blended resins with natural filler material.

B. Solid Surface Sheet:
   1. 1/4" thickness:
      a. Sizes, width x length:
         1) Custom sizes: Refer to Drawings.
      b. Edge Options:
         1) Wavy Edge.

C. Panel Pattern:
   1. Smooth Panel: Standard - 3" (76mm) x 6" (152mm).

D. Color and Finish: As indicated on Drawings and Material Schedule by reference to Manufacturer's proprietary color designations.

E. Seaming Options:
   1. Hard Seam With Wavy Edge.

2.3 ACCESSORIES

A. Trim Options:
   1. Inside Corner Wedge Molding, 15/16"
   2. Inside Corner Molding - L-Shaped, 1" x 1"

2.4 ACCESSORY PRODUCTS

A. Primers:
   1. The following primers are recommended by Inpro® Corporation when adhering BioPrism® using BOSS 385, 100% silicone adhesive for BioPrism® Solid Surface vertical wall applications.
      a. Sherwin Williams PrepRite® Pro Block® Interior /Exterior, Latex Primer /Sealer.
      b. Sherwin Williams ProMar® 200 Zero VOC Interior Latex Primer.
      c. KILZ Clean Start® Primer/Sealer/Stain blocker.
      d. Using other paints or primers may cause discoloration or adhesion problems.
   2. It is the installers' responsibility to confrm that the silicone sealant/adhesive will adhere to the waterproof membrane.

B. Solid Surface Bonding Adhesive:
   1. Adhesive: As recommended by the manufacturer for application; not containing formaldehyde or other volatile organic compounds.
   2. Adhesive Cartridge Dispenser.
   3. Adhesive Mixing Tips.

C. Silicone Adhesive/Sealant:
   1. Pick Resistant Color Coordinated Caulk (Sealant).

2.5 FABRICATION

A. Fabricator should be familiar with the cutting, machining, sanding, polishing and seaming of solid surface materials.

B. Produce joints connecting components using manufacturer's joint adhesive. Joints shall be inconspicuous in appearance.

C. Finish: Finish all surfaces uniformly.

PART 3 – EXECUTION

3.1 EXAMINATION

A. Verify that field measurements are as indicated.

B. Verify that joint preparation and affected dimensions are acceptable.

C. Do not begin installation until substrates have been properly prepared.

D. If substrate preparation is the responsibility of another installer, notify Architect of unsatisfactory preparation before proceeding.

E. Verify plumbing mechanical, electrical, and building items affecting work of this section are placed and ready to receive this work.

F. Examine areas and conditions in which wall cladding will be installed.

3.2 PREPARATION

A. General: Prior to installation, clean area to remove dust, debris and loose particles.

B. Prepare surfaces using the methods recommended by the manufacturer for achieving the best result for the substrate under the project conditions.

C. Clean and prime wall substrate if needed before installing BioPrism® panels. Dark or uneven colors on the wall substrate may cause ghosting of the substrate through the wall panels.

3.3 INSTALLATION

A. General: Install components plumb and level, scribe adjacent finishes, in accordance with approved shop drawings and recommended installation instructions.

B. Install components in accordance with approved shop drawings and manufacturer's instructions.

C. Rigidly anchor to substrate to prevent misalignment.

3.4 TOLERANCES

A. Maximum Variation From True Dimension: 1/8 inch.

B. Maximum Offset From True Position: 1/8 inch.

3.5 CLEANING

A. At completion of the installation, clean surfaces in accordance with the Manufacturer's clean-up and maintenance instructions.

3.6 PROTECTION

A. Protect surfaces from damage until Date of Substantial Completion. Repair work or replace damaged work that cannot be repaired to Architect's satisfaction.

B. Do not permit construction near unprotected surfaces.

END OF SECTION

SECTION 066116 - SOLID SURFACING FABRICATIONS

PART 1 GENERAL

1.1 SUMMARY

A. Section Includes: Solid polymer fabrications, as indicated on Drawings and as specified, including, but not limited to:
   1. Solid Surface Countertops, backsplashes**.**

1.2 RELATED SECTIONS:

A. Section 064100 - Architectural Wood Casework, for sub-tops for solid polymer countertops.

B. Section 066413 - Resin Decorative Panels, for translucent decorative resin panels.

1.3 REFERENCE STANDARDS

A. ASTM E84 - Standard Test Method for Surface Burning Characteristics of Building Materials; 2021a.

B. ASTM G21 - Standard Practice for Determining Resistance of Synthetic Polymeric Materials to Fungi; 2015, with Editorial Revision (2021).

C. ISFA 2-01 - Classification and Standards for Solid Surfacing Material; 2013.

D. NEMA LD 3 - High-Pressure Decorative Laminates; 2005.

1.4 DESIGN REQUIREMENTS

A. Design Load: Deflection limited to 1/360.

B. Design items with sufficient strength for handling stresses.

1.5 SUBMITTALS

A. See Section 013300 - Submittal Requirements, for submittal requirements.

B. Shop Drawings: Indicate dimensions, thicknesses, required clearances, tolerances, materials, colors, finishes, fabrication details, field jointing, adjacent construction, design load parameters, methods of support, integration of plumbing components, and anchorages.

C. Product Data: Indicate product description, fabrication information and compliance with specified performance requirements.

D. Samples: Submit four (4), 6 inch x 6 inch samples of each color/finish of solid surfacing material required.

E. Manufacturer's Installation Instructions: Indicate preparation of opening required, rough-in sizes; provide templates for cast-in or placed frames or anchors; tolerances for item placement, temporary bracing of components.

F. Maintenance Data: Indicate list of approved cleaning materials and procedures required; list of substances that are harmful to the component materials.
   1. Include instructions for stain removal, surface and gloss restoration.

G. Warranty Documentation: Submit manufacturer warranty and ensure that forms have been completed in Owner's name and registered with manufacturer.

H. Maintenance Materials: Furnish the following for Owner's use in maintenance of project.
   1. See Section 016000 - Product Requirements, for additional provisions.
   2. Extra Polishing Cream: 16 oz.

1.6 QUALITY ASSURANCE

A. Manufacturer Qualifications: Company specializing in manufacturing the products specified in this section with minimum 10 years of documented experience.

B. Fabricator Qualifications:
   1. Certified or approved by the Manufacturer.
   2. Subject to approval by Architect.
   3. Have adequate physical facilities and sufficient production capacity to produce, transport, deliver, and install the required units without causing delay in the work.
   4. Have a minimum of 10 years of fabrication experience.

C. Installers: Provide work of this Section executed by competent installers with minimum five (5) years experience in the application of Products, systems and assemblies specified and with approval and training of the Product manufacturers.

D. Source Limitations: Obtain solid surfacing fabrications through one source.

E. Fire-Test-Response Characteristics: Provide solid surfacing fabrications with the following surface-burning characteristics as determined by testing identical products per ASTM E84 by UL 723 or another testing and inspecting agency acceptable to authorities having jurisdiction:
   1. Flame-Spread Index: 25 or less.
   2. Smoke-Developed Index: 450 or less.

1.7 COORDINATION

A. Submit coordination drawings indicating plumbing and miscellaneous steel work indicating locations of wall rated or non-rated, blocking requirements, locations and recessed wall items and similar items.

1.8 DELIVERY, STORAGE AND HANDLING

A. Deliver no components to project site until areas are ready for installation. Store indoors in a dry area on raised sleepers or pallets, and away from extreme temperatures.

B. Deliver materials and accessory products in manufacturer's unopened containers.

C. Handle materials to prevent damage to finished surfaces. Provide protective coverings to prevent physical damage or staining following installation for duration of project.

1.9 WARRANTY

A. Provide manufacturer's ten year limited warranty against visible defects and failure due to manufacturing defects. Damage caused by physical or chemical abuse or damage from excessive heat is excluded from warranty. Warranty shall provide material and labor to repair or replace defective materials.

PART 2 PRODUCTS

2.1 MANUFACTURERS

A. Solid Surfacing Materials: Provide solid surfacing materials of Manufacturers in this specification or scheduled on Drawings and Material Schedules, unless approved otherwise by Architect.

2.2 MATERIALS - SOLID SURFACE

A. Solid Surfacing Material: Manufacturer’s proprietary formulation of fully densified composite of modified polymer resins and mineral fillers.
   1. Basis of Design Product: As indicated on Drawings.
   2. UL Class 1 fire resistance rated.
   3. Color and Finish: As indicated on Drawings and Material Schedule by reference to Manufacturer’s proprietary color designations.
   4. Sheen on the material is a Semi-Gloss finish typical.
   5. Resin: Polyester type, with integral coloring, stain resistant to domestic chemicals and cleaners.
   6. Thickness: 3 cm (1 1/8").
   7. Edge Detail: 1-1/4" thick Ogee edge.
   8. Provide edge details as shown on the Drawings.
   9. Provide 4” backsplashes, where shown on the Drawings, to dimensions shown on the Drawings.

B. Accessories
   1. Joint Adhesive: Manufacturer's standard two-part adhesive kit to create inconspicuous, non-porous joints. Color to match fabrication material.
   2. Panel Adhesive: Manufacturer's standard neoprene-based panel adhesive meeting ANSI A136.1-1967 and UL(R) listed.
   3. Sealant:
      a. For conditions exposed to moisture; Manufacturer's standard mildew-resistant, FDA/UL(R) recognized silicone sealant in colors matching components.
      b. For conditions not exposed to moisture; Manufacturer's standard silicone sealant in colors matching polymer material.

C. Fabrication:
   1. Factory fabricate components to greatest extent practicable to sizes and shapes indicated, in accordance with approved shop drawings.
   2. Form joints between components using manufacturer's standard joint adhesive; without conspicuous joints.
   3. Provide factory cutouts for plumbing fittings and bath accessories as indicated on the drawings. Coordinate with scheduled and specified plumbing fixtures and toilet room accessories.
   4. Cut and finish component edges with clean, sharp returns. Route radii and contours to template. Repair or reject defective and inaccurate work.

PART 3 EXECUTION

3.1 EXAMINATION

A. Verification of Conditions: Examine sub-surfaces to receive Work and report detrimental conditions in writing to Architect. Commencement of Work will be construed as acceptance of sub-surfaces.

B. Coordination: Coordinate with other work which affects, connects with, or will be concealed by this Work.

3.2 INSTALLATION

A. Install components plumb and level, in accordance with approved shop drawings and product installation details.
   1. Tops:
      a. Flat and true to within 1/8" (3 mm) of a flat surface over a 10' length.
      b. Allow a minimum of 1/16" to a maximum of 1/8" (3 mm) clearance between surface and each wall.

B. Form field joints using manufacturer’s recommended adhesive, with joint widths no greater than 1/8" (3 mm) in finished work.
   1. Keep components and hands clean when making joints.

C. Sinks:
   1. Adhere undermount sinks/bowls to countertops using manufacturer’s recommended adhesive and mounting hardware.
   2. Adhere drop-in sinks/bowls to countertops using manufacturer-recommended adhesives and color-matched silicone sealant.

D. Provide backsplashes and end splashes as indicated on the drawings.
   1. Adhere to countertops using manufacturer’s standard color-matched silicone sealant.

E. Keep components and hands clean during installation.
   1. Remove adhesives, sealants and other stains.
   2. Components shall be clean on date of substantial completion.

F. Connections:
   1. Make plumbing connections in accordance with Division 22.
   2. Make electrical connections in accordance with Division 26.

G. Form field joints using manufacturer's recommended adhesive, with joints inconspicuous in finished work. Keep components and hands clean when making joints.

3.3 INSTALLATION TOLERANCES

A. Maximum variation from level and plumb: 1/8 inch in 10 feet, noncumulative.

B. Maximum variation in plane between adjacent pieces at joint: Plus or minus 1/16 inch.

3.4 PROTECTION

A. Keep components and hands clean during installation. Remove adhesives, sealants and other stains. Keep clean until Date of Substantial Completion. Replace stained components.

B. Protect surfaces from damage until Date of Substantial Completion. Repair work or replace damaged work that cannot be repaired to Architect's satisfaction.

3.5 CLEANING

A. During the course of the Work and on completion of the Work, remove and dispose of excess materials, equipment and debris away from premises. Leave Work in clean condition.

END OF SECTION

SECTION 066400 - FIBER REINFORCED PLASTIC (FRP) PANELING

PART 1 GENERAL

1.1 SUMMARY

A. Section Includes: Fiberglass reinforced plastic (FRP) paneling for wall and ceiling surfaces, including trim accessories as indicated in the Drawings.

1.2 RELATED SECTIONS:

A. Section 061000 - Rough Carpentry.

B. Section 092116 - Gypsum Board Assemblies:

1.3 REFERENCE STANDARDS

A. 9 CFR 416.2 - Regulatory Requirements Under the Federal Meat Inspection Act and the Poultry Products Inspection Act, Part 416-Sanitation; current edition.

B. ASTM D256 - Standard Test Methods for Determining the Izod Pendulum Impact Resistance of Plastics; 2010 (Reapproved 2018).

C. ASTM D2583 - Standard Test Method for Indentation Hardness of Rigid Plastics by Means of a Barcol Impressor; 2013a.

D. ASTM D3273 - Standard Test Method for Resistance to Growth of Mold on the Surface of Interior Coatings in an Environmental Chamber; 2021.

E. ASTM D5319 - Standard Specification for Glass-Fiber Reinforced Polyester Wall and Ceiling Panels; 2017.

F. ASTM E84 - Standard Test Method for Surface Burning Characteristics of Building Materials; 2021a.

G. FDA Food Code - Chapter 6 - Physical Facilities; Current Edition.

1.4 ADMINISTRATIVE REQUIREMENTS

A. Preinstallation Meetings: Conduct preinstallation meeting to clarify Project requirements, substrate conditions, manufacturer’s installation instructions and manufacturer’s warranty requirements.

1.5 SUBMITTALS

A. Refer to Section 013300 - Submittal Requirements, for submittal procedures.

B. Product Technical Data: For each type of product required, including product characteristics, accessoriesand limitations.

C. Shop Drawings: Showing layout, profiles and product components, including anchorage, accessories, finish colors, patterns and textures. Indicate location and dimension of joints and fastener attachment.

D. Samples: Selection and verification samples for finishes, colors and textures. Submit 4 samples of each type of panel, trim and fastener.

E. Certificates: Product certificates signed by manufacturer certifying materials comply with specified performance characteristics, criteria and physical requirements.

F. Test and Evaluation Reports: Showing compliance with specified performance characteristics and physical properties.

G. Manufacturer's Instructions: Manufacturer's Installation Guide for FRP.

H. Qualifications Statements: For manufacturer and installer.

I. Operation and Maintenance Data: For installed products including maintenance methods and precautions against cleaning materials and methods detrimental to finishes and performance.

J. Warranty: Warranty documents required in this section.

1.6 MAINTENANCE MATERIAL

A. Extra Materials: Deliver to Owner extra materials from same production run as products installed. Package products with protective covering and identify with descriptive labels. Comply with Division 01 Closeout Submittals Section.
   1. Quantity: Furnish quantity of units equal to 10% percent of amount installed.
   2. Delivery, Storage and Protection: Comply with Owner's requirements for delivery, storage and protection of extra materials.

1.7 QUALITY ASSURANCE

A. Manufacturer Qualifications:
   1. Minimum of 5 years experience manufacturing similar products.
   2. Provider of advanced installer training.

B. Installer Qualifications:
   1. At least five years experience in the installation of fiberglass reinforced plastic panels.
   2. Experience on at least five projects of similar size, type and complexity as this Project.
   3. Employer of workers for this Project who are competent in techniques required by manufacturer for installation indicated.

C. Surface-Burning Characteristics: Determined by testing identical products according to ASTM E84 by a testing agency acceptable to authorities having jurisdiction.
   1. Flame-Spread Index: 25 (Class A) or less.
   2. Smoke-Developed Index: 450 or less.

D. Meets USDA/FSIS requirements.

1.8 DELIVERY, STORAGE AND HANDLING

A. Delivery: Deliver materials in manufacturer's original, unopened, undamaged containers with identification labels intact. Package sheets on skids or pallets for shipment to project site.

B. Storage and Handling: Store materials protected from exposure to harmful weather conditions and at temperature and humidity conditions recommended by manufacturer. Store panels in a dry indoor location at Project site. Remove any foreign matter from face of panel by using a soft bristle brush, avoiding abrasive action.

1.9 PROJECT CONDITIONS

A. Ambient Conditions:
   1. Do not begin installation until building is enclosed, permanent heating and cooling equipment is in operation, and residual moisture from plaster, concrete or terrazzo work has dissipated.
   2. During installation, and within 48 hours prior to installation, maintain ambient temperature and relative humidity within limits required by type of panel adhesive used and recommendation of panel adhesive manufacturer.

1.10 WARRANTY

A. See Section 017836 - Product Warranties and Bonds, for additional warranty requirements.

B. Warranty Period: 1 year from date of purchase.

C. Special Warranty: Manufacturer's standard form in which manufacturer agrees to repair or replace FRP panels that fail within specified warranty period.
   1. Failures shall include, but not be limited to substantial defects in material and workmanship, rotting, rusting, corrosion, development of structural surface cracks, or requiring painting or refinishing.
   2. Warranty Period: Ten years from date of Substantial Completion.

D. Special Warranty: Installer's standard form in which installer agrees to repair or replace FRP panels that fail due to poor workmanship or faulty installation within the specified warranty period.
   1. Warranty Period: 5 years from date of Substantial Completion.

PART 2 PRODUCTS

2.1 MANUFACTURERS

A. Basis of Design Product: Contract Documents are based on products specified below to establish a standard of quality. Other acceptable manufacturers with products having equivalent characteristics may be considered, provided deviations are minor and design concept expressed in Contract Documents is not changed, as determined by the Architect.
   1. Marlite; 1 Marlite Drive, Dover, OH 44622. 800-377-1221 FAX (330) 343-4668 Email: info@marlite.com www.marlite.com.

B. Acceptable Manufacturers: Subject to compliance with requirements of Contract Documents, provide product by one of manufacturers listed alphabetically below. If not listed, submit as substitution according to Conditions of the Contract and DivIsion 1 Sections.
   1. Crane Composites, Inc.; Glasbord Fiberglass Reinforced Plastic (FRP) Panels,
   2. Panolam FRP by Panolam Industries International, Inc., 20 Progress Drive, Shelton, CT 06484. Tel: 877-726-6526, Fax: 203-225-0050. Web: www.panolam.com.
   3. Fibertech, 4110 Old Greenville Hwy, Central, SC, (864) 646-3000, www.fibertech.net

C. Substitutions: Refer to Section 012500 - Substitution Procedures.

2.2 FIBERGLASS REINFORCED PLASTIC (FRP) PANELS

A. Type FRP-1: Fiberglass reinforced thermosetting polyester resin panel sheets complying with ASTM D5319.

B. Product Options:
   1. Class A (I).
   2. Use: Walls.
   3. Color: P199 Bright White.
   4. Surface Finish: Pebbled embossed texture.
   5. Dimensions:
      a. Nominal Thickness: 0.09 inch.(2.3 mm).
      b. Width - 4'-0" (1.22m) nominal
      c. Wall Panel Size: As indicated on drawings.
   6. Surface Protection: Manufacturer's proprietary molecularly-bonded surface protection film for fiberglass reinforced plastic (FRP) panels.

C. Properties: Resistant to rot, corrosion, staining, denting, peeling, and splintering.
   1. Flexural Strength - 1.7 x 104 psi per ASTM D790.
   2. Flexural Modulus – 6.0 x 105 psi per ASTM D790.
   3. Tensile Strength – 8.0 x 103 psi per ASTM D638.
   4. Tensile Modulus – 9.43 x 105 psi per ASTM D638.
   5. Water Absorption - 0.17% per ASTM D570.
   6. Barcol Hardness (scratch resistance) of 30 as per ASTM D2583.
   7. Izod Impact Strength of 7.0 ft. lbs./in ASTM D256

2.3 ACCESSORIES

A. Fasteners: Non-staining nylon drive rivets.
   1. Match panel colors.
   2. Length to suit project conditions.

B. Moldings, Trim, and Caps: 1-piece extruded polypropylene, configured to cover panel edges and corners.
   1. Color: Match Panels
   2. Stainless Steel.

C. Panel Adhesive: As recommended by panel manufacturer for the required substrates, complying with ASTM C557.
   1. Adhesive shall have a VOC content of 50 g/L or less.

D. Panel Sealant: Bright white, 2-part urethane sealant, as recommended by FRP panel manufacturer.
   1. VOC Content: 0.0 g/L.

2.4 SOURCE QUALITY CONTROL

A. Obtain fiberglass reinforced panels, moldings and other accessories from a single manufacturer.

PART 3 EXECUTION

3.1 EXAMINATION

A. General: Comply with manufacturer's product data, including product technical bulletins, and installation instructions in product catalogs and product packaging.

B. Verify that substrates previously installed under other sections are acceptable for product installation in accordance with FRP manufacturer's instructions.
   1. Examine substrate surfaces to determine that corners are plumb and straight, that surfaces are smooth, sound and uniform, that nails or screw fasteners are countersunk, and that joints and cracks are filled flush and smooth with adjoining surfaces.
   2. Do not begin panel installation until substrate surfaces are in satisfactory condition.

3.2 PREPARATION

A. Clean substrates to remove substances that could impair bond of adhesive, including oil, grease, dirt, dust or other contamination.

B. Condition panels by unpacking and placing in installation space no less than 24 hours before installation.

C. Lay out paneling before beginning installation. Locate panel joints to provide equal panel widths at ends of walls and so that trimmed panels at corners are not less than 12 inches (300 mm) wide.

3.3 INSTALLATION

A. General: Comply with panel manufacturer's Installation Guide.

B. Cut and drill panels, finished face down, with carbide tipped saw blades or drill bits, or cut with snips.

C. Install panels with manufacturer's recommended gap for panel field and corner joints.
   1. Use fasteners in accordance with manufacturer's instructions to install FRP panels securely to supports.
   2. Pre-drill fastener holes in panels, 1/8 inch (3.2 mm) greater in diameter than fastener.
   3. Install panels in a full spread of adhesive. For trowel type and application of adhesive, follow adhesive manufacturer's recommendations.

D. Install trim accessories with adhesive and nails or staples. Do not fasten through panels.

E. Sealant:
   1. Fill grooves in trim accessories with sealant before installing panels and bed inside corner trim in a bead of sealant.
   2. Remove excess sealant and smears as paneling is installed. Clean with solvent recommended by sealant manufacturer and then wipe with clean dry cloths.

F. Tolerances:
   1. Width: ±1/8'' (±3.2 mm)
   2. Length: ±1/8'' (±3.2 mm) up to 12' (3.7 m)
   3. Squareness: ±1/8'' (3.2 mm) in 48'' (1.2 m) of width

3.4 FIELD QUALITY CONTROL

A. Manufacturer's Field Services: Provide manufacturer's field service consisting of product use recommendations and periodic site visits for inspection of product installation in accordance with manufacturer's instructions.

3.5 CLEANING

A. Remove temporary coverings and protection of adjacent work areas.

B. Repair or replace any installed products that have been damaged.

C. Remove excess sealant from panels and moldings. Clean installed panels in accordance with manufacturer's instructions.

D. Remove and lawfully dispose of construction debris from project site.

3.6 PROTECTION

A. Protect installed product and finish surfaces from damage during construction.

END OF SECTION

SECTION 066410 - FIBER REINFORCED LAMINATE PANELS (FRL)

PART 1 GENERAL

1.1 SECTION INCLUDES

A. Prefinished fiber reinforced laminate panels (FRL) for wall installation.

1.2 RELATED SECTIONS:

A. Section 079200 - Joint Sealants

B. Section 092116 - Gypsum Board Assemblies.

C. Section 096500 - Resilient Flooring, Wall Base and Accessories: Resilient Base.

1.3 REFERENCE STANDARDS

A. National Electrical Manufacturer's Association NEMA: NEMA LD3.13 - Wear Resistance.

B. ASTM D5319-17 - Standard Specification for Glass-Fiber Reinforced Polyester Wall and Ceiling Panels

C. 1 - Standard Test Method for Surface Burning Characteristics of Building Materials; 2017

1.4 SUBMITTALS

A. Refer to Section 013300 - Submittal Requirements, for Submittal procedures.

B. Product Data: Submit manufacturer's information describing physical and performance characteristics, patterns, attachment methods, colors and finishes available.

C. Samples: Submit five (5) samples 3 x 6 inches in size of panel and five (5) pieces of molding illustrating panel and molding color.

D. Manufacturer's Instructions: Submit installation instructions including preparation, application, termination and cleaning.

1.5 QUALITY ASSURANCE

A. Manufacturer: Minimum of 10 years experience manufacturing similar products.

1.6 DELIVERY, STORAGE AND HANDLING

A. Deliver materials and products in unopened factory labeled packages. Store and handle in strict compliance with manufacturer's instructions and recommendations.

1.7 WARRANTY

A. Refer to Section 017836 - Warranties and Bonds for additional warranty requirements.

B. Manufacturer's Warranty: Provide manufacturer's standard warranty against defects in manufacturing.

PART 2 PRODUCTS

2.1 MANUFACTURERS

A. Basis of Design Product: Contract Documents are based on products specified below to establish a standard of quality. Other acceptable manufacturers with products having equivalent characteristics may be considered, provided deviations are minor and design concept expressed in Contract Documents is not changed, as determined by the Architect.
   1. Panolam Industries International, Inc., 20 Progress Drive, Shelton, CT 06484. Tel: 888-375-9255. Web: www.panolam.com.

B. Acceptable Manufacturers: Subject to compliance with requirements of Contract Documents, provide product by one of manufacturers listed alphabetically below. If not listed, submit as substitution according to Conditions of the Contract and Division 1 Sections.
   1. Nevamar's FRL® Fiber Reinforced Laminate.

C. Substitutions: 012500 - Substitution Procedures.

2.2 FIBER REINFORCED LAMINATES

A. Color and Finish: Provide color, texture and finish as shown on Drawings and Material Schedules.

2.3 MATERIALS

A. Thermofused melamine overlay, decorative paper and Fire Rated phenolic paper with fiber reinforcing inner layers.

B. Thickness: 0.075 inches.

C. Size as required for installation.

D. IMO Certifed for marine use.

E. Wear Resistance (Cycles) NEMA 3.13: 3500 typical.

F. Flexural Strength ASTM D790: 20,148 psi typical.

G. Surface Burning Characteristics: US Standard UL-723/ASTM E84 Class A.

2.4 ACCESSORIES

A. Anodized Aluminum Molding Profiles: Outside corners flat, outside corners round, division bars, inside corners, standard end caps.

B. Joint Caulking: Color Sil by Color Rite or equal approved by panel manufacturer; 100 percent silicone based colored caulking.

C. Adhesive and mechanical anchors shall be as recommended by the panel manufacturer for the appropriate sub-strate.

PART 3 INSTALLATION

3.1 EXAMINATION

A. A. Examine substrates for compliance with requirements for installation tolerances and other conditions affecting performance. Proceed with installation only after unsatisfactory conditions have been corrected.

3.2 PREPARATION

A. Verify all work on substrate is completed including framing, blocking and backing for accessories and gypsum board.

B. Clean substrate of dirt, dust, waxes, and other bond breaking substances prior to beginning installation.

C. Beginning of installation means acceptance of substrate and preparation work by other trades.

3.3 INSTALLATION

A. Install panels as shown on drawings and in strict accordance with the manufacturer's instructions and approved submittals.

B. Install panels in vertical position. Maintain 4 foot module throughout. Cut panels where required to conform to substrate shall match 4 foot module.

C. Install panels full height without horizontal joints.

D. Place FRL panels in place leaving approximately 1/8 inch between panels.

E. Mount panels to substrate with manufacturer's recommended adhesive spread to an even constant thickness.

F. Provide manufacturer's recommend trim at vertical joints, interior and exterior corners, panel terminations at sides, bottom and top and cutouts as shown on drawings.

G. Where no trim is used, seal panel joints and top, side and bottom edges with colored sealant to match panel color. Wipe smooth and remove excess sealant from panel face.

H. Apply pressure to entire panel face with laminate type “J” roller, to remove trapped air and ensure proper adhesion between interior surfaces.

3.4 ADJUSTING AND CLEANING

A. Replace installations out of plumb and not aligned with adjacent panels and construction.

B. Clean panel face to remove soiling, stains, dust, and dirt using clean rags, and cleaning agents as instructed by manufacturer.

C. Leave installation clean, free of residue and debris resulting from work of this Section.

END OF SECTION

SECTION 072100 - BUILDING INSULATION

PART 1 GENERAL

1.1 SECTION INCLUDES

A. Board insulation as indicated on the drawings.

B. Batt insulation in wall, ceiling, and roof construction.

C. Batt insulation for filling perimeter window and door shim spaces and crevices in exterior wall and roof.

D. Acoustic insulation.

1.2 RELATED REQUIREMENTS

A. Section 075419 - PVC Thermoplastic Single-Ply Roofing: Insulation specified as part of roofing system.

1.3 REFERENCE STANDARDS

A. ASTM A653/A653M - Standard Specification for Steel Sheet, Zinc-Coated (Galvanized) or Zinc-Iron Alloy-Coated (Galvannealed) by the Hot-Dip Process; 2020.

B. ASTM C240 - Standard Test Methods for Testing Cellular Glass Insulation Block; 2021.

C. ASTM C518 - Standard Test Method for Steady-State Thermal Transmission Properties by Means of the Heat Flow Meter Apparatus; 2021.

D. ASTM C552 - Standard Specification for Cellular Glass Thermal Insulation; 2022.

E. ASTM C578 - Standard Specification for Rigid, Cellular Polystyrene Thermal Insulation; 2019.

F. ASTM C612 - Standard Specification for Mineral Fiber Block and Board Thermal Insulation; 2014 (Reapproved 2019).

G. ASTM C726 - Standard Specification for Mineral Wool Roof Insulation Board; 2017.

H. ASTM C1289 - Standard Specification for Faced Rigid Cellular Polyisocyanurate Thermal Insulation Board; 2022.

I. ASTM D2842 - Standard Test Method for Water Absorption of Rigid Cellular Plastics; 2019.

J. ASTM E84 - Standard Test Method for Surface Burning Characteristics of Building Materials; 2021a.

K. ASTM E96/E96M - Standard Test Methods for Gravimetric Determination of Water Vapor Transmission Rate of Materials; 2021.

L. ASTM E136 - Standard Test Method for Assessing Combustibility of Materials Using a Vertical Tube Furnace at 750°C; 2019a.

M. ASTM E2357 - Standard Test Method for Determining Air Leakage of Air Barrier Assemblies; 2018.

N. NFPA 255 - Standard Method of Test of Surface Burning Characteristics of Building Materials; 2006.

O. NFPA 285 - Standard Fire Test Method for Evaluation of Fire Propagation Characteristics of Exterior Wall Assemblies Containing Combustible Components; 2019.

P. UL 723 - Standard for Test for Surface Burning Characteristics of Building Materials; Current Edition, Including All Revisions.

1.4 SUBMITTALS

A. See Section 013300 - Submittal Requirements for submittal procedures.

B. Product Data: Provide data on product characteristics, performance criteria, and product limitations.

C. Manufacturer's Certificate: Certify that products meet or exceed specified requirements.

D. Manufacturer's Installation Instructions: Include information on special environmental conditions required for installation and installation techniques.

E. Manufacturer's Certificate: Certify that products meet or exceed specified requirements.

1.5 QUALITY ASSURANCE

A. Comply with regulatory agency requirements for fire resistance ratings and surface burning characteristics.

B. Provide certification that product conforms to the required fire resistive requirements.

1.6 DELIVERY AND STORAGE

A. Deliver materials to the project in Manufacturer's original packaging and labels. Protect against damage to the product.

1.7 FIELD CONDITIONS

A. Do not install insulation adhesives when temperature or weather conditions are detrimental to successful installation.

PART 2 PRODUCTS

2.1 APPLICATIONS

A. Insulation Under Concrete Slabs: Extruded polystyrene (XPS) board.

B. Insulation at Perimeter of Foundation: Extruded polystyrene (XPS) board.

C. Insulation Inside Masonry Cavity Walls: Expanded polystyrene (EPS) board.

D. Insulation Inside Prefabricated Wall Panels: Extruded polystyrene (XPS) board.

E. Insulation Over Metal Stud Framed Walls, Continuous: Extruded polystyrene (XPS) board.

F. Insulation on Inside of Framed Walls with Exposed Facer Providing Interior Finish: Rigid cellular polyisocyanurate with exposed facers.

G. Insulation on Inside of Concrete or Masonry Exterior Walls: Polyisocyanurate board.

H. Insulation in Metal Framed Walls: Unfaced Batt insulation.

I. Insulation in Wood Framed Walls: Batt insulation with no vapor retarder.

J. Insulation in Wood Framed Walls: Sound Batt insulation with no vapor retarder.

K. Insulation in Wood Framed Ceiling Structure: Batt insulation with no vapor retarder.

L. Insulation Above Lay-In Acoustical Ceilings: Unfaced Batt insulation.

M. Insulation Over Roof Deck: Polyisocyanurate board.

N. Insulation at Structural Connections: Rigid, high-strength polyurethane.

2.2 FOAM BOARD INSULATION MATERIALS

A. Expanded Polystyrene (EPS) Board Insulation: Comply with ASTM C578.
   1. Flame Spread Index (FSI): Class A - 0 to 25, when tested in accordance with ASTM E84.
   2. Smoke Developed Index (SDI): 450 or less, when tested in accordance with ASTM E84.
   3. Complies with fire resistance requirements indicated on drawings as part of an exterior non-load-bearing exterior wall assembly when tested in accordance with NFPA 285.
   4. Board Size: 48 inch by 96 inch.
   5. Board Thickness: 1-1/2 inch.
   6. Board Edges: Square.
   7. Type and Water Absorption: Type XI, 4.0 percent by volume, maximum, by total immersion.
   8. Board Density: 0.7 lb/cu ft.
   9. Type and Thermal Resistance, R-value: Type XI, 3.1 (0.55), minimum, per 1 inch thickness at 75 degrees F mean temperature.
   10. Thermal Conductivity (k factor) at 25 degrees F: 0.28.
   11. Products:

B. Extruded Polystyrene (XPS) Board Insulation: Comply with ASTM C578 with either natural skin or cut cell surfaces.
   1. Type and Compressive Resistance: Type IV, 25 psi (173 kPa), minimum.
   2. Flame Spread Index (FSI): Class A - 0 to 25, when tested in accordance with ASTM E84.
   3. Smoke Developed Index (SDI): 450 or less, when tested in accordance with ASTM E84.
   4. Type and Thermal Resistance, R-value: Type IV, 5.0 (0.88), minimum, per 1 inch thickness at 75 degrees F mean temperature.
   5. Complies with fire resistance requirements indicated on drawings as part of an exterior non-load-bearing exterior wall assembly when tested in accordance with NFPA 285.
   6. Board Edges: Square.
   7. Type and Water Absorption: Type XII, 0.3 percent by volume, maximum, by total immersion.
   8. Products:
      a. Dow Chemical Company: www.dow.com/sle.
      b. Basis of Design: Owens Corning Corporation; FOAMULAR® & FOAMULAR® NGX™ 250: www.ocbuildingspec.com/#sle.

C. Polyisocyanurate (ISO) Board Insulation: Rigid cellular foam, comply with ASTM C1289.
   1. Classifications:
      a. Type I: Faced with aluminum foil on both major surfaces of the core foam.
         1) Class 1 - Non-reinforced core foam.
         2) Compressive Strength: 16 psi, minimum.
         3) Thermal Resistance, R-value: At 1-1/2 inch thick; 9.0, minimum, at 75 degrees F.

b. Type II: Faced with either cellulosic facers or glass fiber mat facers on both major surfaces of the core foam.
   1) Class 1 - Faced with glass fiber reinforced cellulosic facers on both major surfaces of core foam.
   2) Compressive Strength: Classes 1-2-3, Grade 1 - 16 psi (110 kPa), minimum.
   3) Thermal Resistance, R-value: At 1-1/2 inch thick; Class 1, Grades 1-2-3 - 8.4 (1.48), minimum, at 75 degrees F.
c. Type III: Faced with perlite insulation board on one major surface of core foam and faced on the other major surface with any facer described in this specification.
   1) Compressive Strength: 16 psi, minimum.
   2) Thermal Resistance, R-value: At 1-1/2 inch thick; 7.0, minimum, at 75 degrees F.
d. Type IV: Faced with a cellulosic fiber insulating board on one major surface of the core foam and faced on the other major surface with any facer described in this specification.
   1) Compressive Strength: 16 psi, minimum.
   2) Thermal Resistance, R-value: At 1-1/2 inch thick; 6.9, minimum, at 75 degrees F.
e. Type V: Faced with oriented strand board (OSB) or plywood on one major surface of the core foam and faced on the other major surface with any facer described in this specification.
   1) Compressive Strength: 16 psi, minimum.
   2) Thermal Resistance, R-value: At 1-1/2 inch thick; 6.2, minimum, at 75 degrees F.
f. Type VII: Faced with glass mat faced gypsum board on one major surface of the core foam and faced on the other major surface with any facer described in this specification.
   1) Compressive Strength: 16 psi, minimum.
   2) Thermal Resistance, R-value: At 1-1/2 inch thick; 7.0, minimum, at 75 degrees F.

2. Flame Spread Index (FSI): Class A - 0 to 25, when tested in accordance with ASTM E84.
3. Smoke Developed Index (SDI): 450 or less, when tested in accordance with ASTM E84.
4. Water Vapor Permeance: 1.2 perm, maximum, at 1 inch thickness, and when tested in accordance with ASTM E96/E96M, desiccant method.
5. Comply with fire resistance requirements indicated on drawings as part of an exterior non-load-bearing exterior wall assembly when tested in accordance with NFPA 285.
6. Board Size: 48 inch by 96 inch.
7. Board Thickness: 1.5 inch.
8. Tapered Board: Slope as indicated; minimum thickness ____ inch; fabricate of fewest layers possible.
9. Board Edges: Square.
10. Products:

D. Rigid Cellular Polyisocyanurate (ISO) Thermal Insulation Board with Facers Both Sides and Providing Interior Finish System: Complying with ASTM C1289.
   1. Classification: Type I - Faced with aluminum foil on both major surfaces of the core foam, and Class 2 - Glass fiber reinforced or non-reinforced core foam.
   2. Compressive Strength: 16 psi, minimum.
   3. Thermal Resistance, R-value: Type I, Class 2, at 1-1/2 inch thick; 9.0, minimum, at 75 degrees F.
   4. Flame Spread Index (FSI): Class A - 0 to 25, when tested in accordance with ASTM E84.
   5. Smoke Developed Index (SDI): 450 or less, when tested in accordance with ASTM E84.
   6. Board Size: 48 inch by 96 inch.
   7. Board Thickness: 1 inch.

8. Board Edges: Square.
9. Exposed Facer: 4 mil, 0.004 inch embossed white thermoset-coated aluminum.
10. Non-Exposed Facer: 1.25 mil, 0.00125 inch embossed aluminum.
11. Water Absorption: 0.1 percent by volume, maximum, by total immersion.

E. Rigid Cellular Polyisocyanurate (ISO) Thermal Insulation Board with Facers Both Sides: Complying with ASTM C1289.
   1. Classifications:
      a. Type I: Faced with aluminum foil on both major surfaces of core foam.
         1) Class 2 - Glass fiber reinforced or non-reinforced core foam.
         2) Compressive Strength: 16 psi, minimum.
         3) Thermal Resistance, R-value: At 1-1/2 inch thick; 9.0, minimum, at 75 degrees F.
      b. Type II: Faced with either cellulosic facers or glass fiber mat facers on both major surfaces of the core foam.
         1) Class 1 - Faced with glass fiber reinforced cellulosic facers on both major surfaces of core foam.
         2) Compressive Strength: Classes 1-2-3, Grade 1 - 16 psi (110 kPa), minimum.
         3) Thermal Resistance, R-value: At 1-1/2 inch thick; Class 1, Grades 1-2-3 - 8.4 (1.48), minimum, at 75 degrees F.
   2. Flame Spread Index (FSI): Class A - 0 to 25, when tested in accordance with ASTM E84.
   3. Smoke Developed Index (SDI): 450 or less, when tested in accordance with ASTM E84.
   4. Comply with fire resistance requirements indicated on drawings as part of an exterior non-load-bearing exterior wall assembly when tested in accordance with NFPA 285.
   5. Board Size: 48 inch by 96 inch.
   6. Thermal Resistance: R-value of R-30 min..
   7. Board Edges: Square.
   8. Products:
      a. Carlisle SynTec; SecurShield Insulation: www.carlisle-syntec.com.

F. Rigid Cellular Polyisocyanurate (ISO) Thermal Insulation Board with Facers Both Sides and Water-Resistive Barrier: Complying with ASTM C1289.
   1. Classifications:
      a. Type II: Faced with either cellulosic facers or glass fiber mat facers on both major surfaces of the core foam.
         1) Class 1 - Faced with glass fiber reinforced cellulosic facers on both major surfaces of the core foam.
         2) Compressive Strength: Classes 1-2-3, Grade 1 - 16 psi (110 kPa), minimum.
         3) Thermal Resistance, R-value: At 1-1/2 inch thick; Class 1, Grades 1-2-3 - 8.4 (1.48), minimum, at 75 degrees F.
   2. Flame Spread Index (FSI): Class A - 0 to 25, when tested in accordance with ASTM E84.
   3. Smoke Developed Index (SDI): 450 or less, when tested in accordance with ASTM E84.
   4. Comply with fire resistance requirements indicated on drawings as part of an exterior non-load-bearing exterior wall assembly when tested in accordance with NFPA 285.
   5. Board Size: 48 by 96 inch.
   6. Board Thickness: 1 inch.
   7. Board Edges: Square.
   8. Water Vapor Permeance: 1.2 perm, maximum, at 1 inch thickness, and when tested in accordance with ASTM E96/E96M, desiccant method.

2.3 MINERAL FIBER BOARD INSULATION MATERIALS

A. Mineral Wool Roof Insulation Boards: Complying with ASTM C726, with higher density top layer.
   1. Face Coating: None, unfaced.
   2. Flame Spread Index: Zero, when tested with or without facing, in accordance with ASTM E84.
   3. Smoke Developed Index: Zero, when tested with or without facing, in accordance with ASTM E84.
   4. Board Size: 48 by 48 inches.
   5. Board Thickness: 2 inches.
   6. Board Edges: Square.
   7. Thermal Conductivity (k-factor): Btu inch/hr sq ft degrees F of 3.8 per inch, minimum, at 75 degrees F when tested in accordance with ASTM C518.
   8. Top Layer Density: 13.75 pcf, nominal.
   9. Bottom Layer Density: 9.36 pcf for thicknesses greater than 2-1/2 inches.

2.4 MINERAL FIBER BLANKET INSULATION MATERIALS

A. EcoTouch® Unfaced Batt Insulation: ASTM C665, Type I, preformed formaldehyde free glass fiber batt type, unfaced. Includes Unfaced SonoBatts and Sound Attenuation Batts.
   1. Noncombustible per ASTM E136.
   2. Flamespread less than 25, smoke developed less than 50 per ASTM E84.
   3. ICC Building Code Construction Classification: All types.
   4. Water vapor sorption, Maximum by weight: not more than 5 percent.

B. EcoTouch® Kraft Faced Batt Insulation: ASTM C665, Type II, Class C preformed formaldehyde free glass fiber batt type, Kraft paper faced one side. Includes Kraft faced SonoBatts and EcoTouch® ProPink FastBatt Insulation
   1. ICC Building Code Construction Classification: III, IV, V.
   2. Perm Rating: 1 perm maximum per ASTM E96.

C. EcoTouch® Foil Faced Batt Insulation: ASTM C665, Type III, Class C preformed formaldehyde free glass fiber batt type, foil faced one side.

D. Flamespread less than 75, smoke developed less than 150 per ASTM E84.
   1. ICC Building Code Construction Classification: III, IV, V.
   2. Perm Rating: 0.5 perm maximum per ASTM E96.

E. EcoTouch® FS-25 Batt Insulation: ASTM C665, Type II (PSK facing), Class A and Type III (FSK facing), Class A preformed formaldehyde free glass fiber batt, poly/scrim/Kraft (PSK) or foil/scrim/Kraft (FSK) faced on one side.

F. Performance Criteria:
   1. Flame spread less than 25, smoke developed index less than 50 per ASTM E84.
      a. ICC building construction classification: all types.
      b. Perm Rating: 0.02 maximum per ASTM E96.
   2. Flame Spread Index: 25 or less, when tested in accordance with ASTM E84.
   3. Smoke Developed Index: 450 or less, when tested in accordance with ASTM E84.
   4. Combustibility: Non-combustible, when tested in accordance with ASTM E136, except for facing, if any.
   5. Formaldehyde Content: Zero.

6. Thermal Resistance:
   a. Roofs and Soffits: R-38 min.
   b. Walls: R-20.
7. Thickness: As required in order to meet the R-Value specified..
8. Facing: Unfaced.
9. Products:
   a. Basis of Design:
      1) Owens Corning Corp: www.owenscorning.com.
   b. Acceptable Manufacturers:
      1) CertainTeed Corporation: www.certainteed.com.
      2) Johns Manville: www.jm.com.
      3) Or Approved Equal.

G. Sound Attenuation Batts:
1. Kraft faced glass fiber acoustical insulation, complying with ASTM C665, Type II, Class C.
2. Unfaced glass fiber acoustical insulation complying with ASTM C665, Type I.
3. Size:
   a. Thickness: 3½" (89mm), Width: 16" (406mm) or 24" (609mm), Length: 96" (2438mm).
4. Surface Burning Characteristics: ASTM E84.
   a. Maximum flame spread: Not Rated.
   b. Maximum smoke developed: Not Rated.
5. Surface Burning Characteristics:
   a. Maximum flame spread: 10
   b. Maximum smoke developed: 10
   c. When tested in accordance with ASTM E84.
6. Combustion Characteristics:
   a. Passes ASTM E136.
7. Fire Resistance Ratings:
   a. Passes ASTM E119 as part of a complete fire tested wall assembly.
8. Sound Transmission Class: STC 45 min.
9. Dimensional Stability:
   a. Linear Shrinkage less than 0.1%
10. Manufacturers:
    a. Basis of Design:
       1) Owens Corning Corp: www.owenscorning.com.
    b. Acceptable Manufacturers:
       1) Johns Manville Corporation: www.jm.com.
       2) CertainTeed Corporation: www.certainteed.com.

2.5 ACCESSORIES

A. Sheet Vapor Retarder: Specified in Section 072500.

B. Tape: Bright aluminum self-adhering type, mesh reinforced, 2 inch wide.

C. Tape joints of rigid insulation in accordance with roofing and insulation manufacturers' instructions.

D. Insulation Fasteners: Impaling clip of unfinished steel with washer retainer and clips, to be adhered to surface to receive insulation, length to suit insulation thickness and substrate, capable of securely and rigidly fastening insulation in place.

E. Insulation Fasteners: Appropriate for purpose intended.
   1. Length as required for thickness of insulation material and penetration of deck substrate.

F. Continuous Insulation (CI) Support Systems: Composite framing support (CFS) system consisting of insulated fiberglass reinforced plastic (FRP) girts that support CI and provide cladding attachment support integrated with metal wall panels, brick veneer, CMU veneer, or _____ exterior wall cladding.
   1. Substrate: Attach CFS system components to open metal stud framing without sheathing, open wood stud framing without sheathing, exterior sheathing over metal stud framing, exterior sheathing over wood stud framing, concrete masonry units (CMU), poured concrete, or _____.
   2. Depth of Girts: As required for thickness of insulation.
   3. Length: 6 inches for clips, and 96 inches for girts.
   4. Spacing of Girts: 16 inches on center, vertically.

G. Continuous Insulation (CI) Support Clips: Thermally-broken, with thermal spacer clip or steel support clip with thermal isolator pad for support of cladding z-girts, angles, channels, and other insulation framing.
   1. Thermal Spacer Clip: Pultruded glass fiber and thermoset polyester resin clip; 3/16 inch thick at top, base, and web.
   2. Galvanized Steel Support Clip: 14 gauge, 0.0747 inch, G90/Z275 galvanized support clip complying with ASTM A653/A653M, with integral glass fiber reinforced polyamide thermal isolator pad.
   3. Clip Depth: As indicated on drawings.

H. Nails or Staples: Steel wire; electroplated or galvanized; type and size to suit application.

I. Wire Mesh: Galvanized steel, hexagonal wire mesh.

J. Protection Board for Below Grade Insulation: Cementitious, 1/4 inch thick.

K. Adhesive: Type recommended by insulation manufacturer for application.

PART 3 EXECUTION

3.1 EXAMINATION

A. Verify that substrate, adjacent materials, and insulation materials are dry and that substrates are ready to receive insulation.

B. Verify substrate surfaces are flat, free of honeycomb, fins, irregularities, or materials or substances that may impede adhesive bond.

3.2 BOARD INSTALLATION AT FOUNDATION PERIMETER

A. Adhere a 6 inch wide strip of polyethylene sheet over construction, control, and expansion joints with double beads of adhesive each side of joint.
   1. Tape seal joints.

2. Extend sheet full height of joint.

B. Apply adhesive to back of boards:
   1. Three continuous beads per board length.
   2. Full bed 1/8 inch thick.

C. Install boards horizontally on foundation perimeter.
   1. Place boards to maximize adhesive contact.
   2. Install in running bond pattern.
   3. Butt edges and ends tightly to adjacent boards and to protrusions.

D. Extend boards over expansion joints, unbonded to foundation on one side of joint.

E. Cut and fit insulation tightly to protrusions or interruptions to the insulation plane.

F. Immediately following application of board insulation, place protective boards over exposed insulation surfaces.
   1. Apply adhesive in five continuous beads per board length.
   2. Install boards horizontally from base of foundation to top of insulation.
   3. Butt boards tightly, with joints staggered from insulation joints.

3.3 BOARD INSTALLATION AT EXTERIOR WALLS

A. Adhere 6 inches wide strip of polyethylene sheet over expansion joints with double beads of adhesive each side of joint.
   1. Tape seal joints between sheets.
   2. Extend sheet full height of joint.

B. Apply adhesive to back of boards:
   1. Three continuous beads per board length.
   2. Full bed 1/8 inch thick.

C. Install rigid insulation directly to steel studs or exterior grade sheathing at 16 inches on center with manufacturer recommended mechanical fasteners, and tape joints with manufacturer's minimum 4 inches wide sealant tape; comply with ASTM E2357.

D. Install boards horizontally on walls.
   1. Place boards to maximize adhesive contact.
   2. Install in running bond pattern.
   3. Butt edges and ends tightly to adjacent boards and protrusions.

E. Extend boards over expansion joints, unbonded to wall on one side of joint.

F. Cut and fit insulation tightly to protrusions or interruptions to the insulation plane.

G. Place 6 inches wide polyethylene sheet at perimeter of wall openings, from adhesive vapor retarder bed to window and door frames, and tape seal in place to ensure continuity of vapor retarder and air seal.

H. Tape insulation board joints.

3.4 BOARD INSTALLATION AT CAVITY WALLS

A. Secure impale fasteners to substrate at following frequency:
   1. Six (6) per insulation board.

B. Adhere a 6 inch wide strip of polyethylene sheet over expansion joints with double beads of adhesive each side of joint.
   1. Tape seal joints between sheets.
   2. Extend sheet full height of joint.

C. Install boards to fit snugly between wall ties.
   1. Place membrane surface against adhesive.
   2. Place membrane surface facing out, and tape seal board joints.

D. Install boards horizontally on walls.
   1. Place boards to maximize adhesive contact.
   2. Install in running bond pattern.
   3. Butt edges and ends tightly to adjacent boards and protrusions.
   4. Place impale fastener locking discs.

E. Cut and fit insulation tightly to protrusions or interruptions to the insulation plane.

F. Place 6 inches wide polyethylene sheet at perimeter of wall openings, from adhesive vapor retarder bed to window and door frames, and tape seal in place to ensure continuity of vapor retarder and air seal.

3.5 BOARD INSTALLATION USING COMPOSITE FRAMING SUPPORT (CFS) SYSTEM

A. Install CFS system in accordance with manufacturer's installation instructions.

B. Install CFS system in compliance with system orientation, sizes, and locations as indicated on drawings.

C. Install CFS system to fill-in exterior wall spaces without gaps or voids, and do not compress insulation boards.

D. Trim insulation neatly to fit spaces, and insulate miscellaneous gaps and voids with approved expandable foam sealant.

3.6 BOARD INSTALLATION UNDER CONCRETE SLABS

A. Place insulation under slabs on grade after base for slab has been compacted.

B. Cut and fit insulation tightly to protrusions or interruptions to the insulation plane.

C. Prevent insulation from being displaced or damaged while placing vapor retarder and placing slab.

3.7 BOARD INSTALLATION OVER LOW SLOPE ROOF DECK

A. Installation of board insulation over low slope roof deck is specified in Section 07 54 19.

B. Board Installation Over Roof Deck, General:
   1. See applicable roofing specification section for specific board installation requirements.
   2. Ensure vapor retarder is clean and dry, continuous, and ready for application of roofing system.
   3. Fasten insulation to deck in accordance with roofing manufacturer's written instructions and applicable Factory Mutual requirements.
   4. Do not apply more insulation than can be covered with roofing on the same day.

3.8 BATT INSTALLATION

A. Install insulation in accordance with manufacturer's instructions.

B. Install in exterior wall spaces without gaps or voids. Do not compress insulation.

C. Trim insulation neatly to fit spaces. Insulate miscellaneous gaps and voids.

D. Fit insulation tightly in cavities and tightly to exterior side of mechanical and electrical services within the plane of the insulation.

E. Install with factory-applied vapor retarder membrane facing warm side of building spaces. Lap ends and side flanges of membrane over framing members.

F. Tape insulation batts in place.

G. Retain insulation batts in place withstring wire of other method approved by the Archirect.

H. Tape seal butt ends, lapped flanges, and tears or cuts in membrane.

I. At wood framing, place vapor retarder on warm side of insulation by stapling at 6 inches on center. Lap and seal sheet retarder joints over face of member.

J. At metal framing, place vapor retarder on warm side of insulation; lap and seal sheet retarder joints over face of member

K. Tape seal tears or cuts in vapor retarder.

L. Extend vapor retarder tightly to full perimeter of adjacent window and door frames and other items interrupting the plane of the membrane; tape seal in place.

3.9 FIELD QUALITY CONTROL

A. See Section 014000 - Quality Requirements for additional requirements.

3.10 ACOUSTIC INSTALLATION

A. Acoustic Insulation: Place tightly within spaces, around cut openings, behind and around electrical and mechanical items within partitions, and tight to items passing through partitions.

B. Comply with manufacturer's instructions for particular conditions of installation in each case.

C. Batts may be friction fit in place until the interior finish is applied. Install batts to fill entire Stud cavity. If stud cavity is less than 96" in height, cut lengths to friction fit against floor and ceiling tracks, walls with penetrations require that insulation be carefully cut to fit around outlets, junction boxes and other irregularities.

D. Where walls are not finished on both sides or insulation does not fill the cavity depth, supplementary support must be provided to hold product in place.

E. Where insulation must extend higher than 8 feet, temporary support can be provided to hold product in place until the finish material is applied.

F. Acoustic Sealant: Refer to Section 079200 - Joint Sealants.

3.11 PROTECTION

A. Do not permit installed insulation to be damaged prior to its concealment.

END OF SECTION

SECTION 072500 - WEATHER BARRIERS

PART 1 - GENERAL

1.1 SECTION INCLUDES

A. Water-Resistive Barrier: Under exterior wall cladding, over sheathing or other substrate; not air tight or vapor retardant.

B. Seam Tape

C. Flashing

D. Fasteners

1.2 RELATED REQUIREMENTS

A. Section 03 3000 - Cast-in-Place Concrete: Vapor retarder under concrete slabs on grade.

B. Section 074646 - Fiber-Cement Siding: Water-resistive barrier under siding.

C. Section 07 6200 - Sheet Metal Flashing and Trim: Metal flashings installed in conjunction with weather barriers.

D. Section 07 9200 - Exterior Joint Sealants: Sealant materials and installation techniques.

E. Section 09 2116 - Gypsum Board Assemblies: Water-resistive barrier under exterior cladding.

1.3 REFERENCE STANDARDS

A. AATCC Test Method 30 - Test Method for Antifungal Activity, Assessment on Textile Materials: Mildew and Rot Resistance of Textile Materials; 2017, with Editorial Revision (2019).

B. AATCC Test Method 127 - Test Method for Water Resistance: Hydrostatic Pressure; 2018, with Editorial Revision (2019).

C. ASTM C1338 - Standard Test Method for Determining Fungi Resistance of Insulation Materials and Facings; 2019.

D. ASTM E84 - Standard Test Method for Surface Burning Characteristics of Building Materials; 2021a.

E. ICC-ES AC38 - Acceptance Criteria for Water-Resistive Barriers; 2016, with Editorial Revision (2019).

F. ICC-ES AC148 - Acceptance Criteria for Flexible Flashing Materials; 2017.

G. ICC-ES AC212 - Acceptance Criteria for Water-Resistive Coatings Used as Water-Resistive Barriers over Exterior Sheathing; 2015.

H. NFPA 285 - Standard Fire Test Method for Evaluation of Fire Propagation Characteristics of Exterior Wall Assemblies Containing Combustible Components; 2019.

1.4 DEFINITIONS

A. Weather Barrier: Assemblies that form either water-resistive barriers, air barriers, or vapor retarders.

B. Air Barrier: Air tight barrier made of material that is relatively air impermeable but water vapor permeable, both to the degree specified, with sealed seams and with sealed joints to adjacent surfaces. Note: For the purposes of this specification, vapor impermeable air barriers are classified as vapor retarders.

C. Vapor Retarder: Air tight barrier made of material that is relatively water vapor impermeable, to the degree specified, with sealed seams and with sealed joints to adjacent surfaces.
   1. Water Vapor Permeance: For purposes of conversion, 57.2 ng/(Pa s sq m) = 1 perm.

D. Water-Resistive Barrier: Water-shedding barrier made of material that is moisture-resistant, to the degree specified, intended to be installed to shed water without sealed seams.

1.5 SUBMITTALS

A. See Section 01 3300 - Submittal Requirements, for submittal procedures.

B. Product Data: Submit manufacturer current technical literature for each component.
   1. Include manufacturer's written instructions for evaluating, preparing, and treating substrate; technical data; and tests physical and performance properties of products.
   2. For building wrap, include data on air and water-vapor permeance based on testing according to referenced standards.
   3. Submit documentation from primary materials manufacturer indicating approval of products not manufactured by primary materials manufacturer.
   4. Include statement that materials are compatible with adjacent materials proposed for use.
   5. Submit letter from the sealant manufacturer indicating sealant adhesion to the water-resistant material meet the requirements of the project.

C. Shop Drawings: Provide drawings of special joint conditions.
   1. Show locations and extent of air barrier. Include details for substrate joints and cracks, counterflashing strips, penetrations, inside and outside corners, terminations, and tie-ins with adjoining construction.
   2. Include details of interfaces with other materials that form part of air barrier.

D. Samples: Weather Barrier Membrane, minimum 8-1/2 inches by 11 inch.

E. Quality Assurance Submittals
   1. Design Data, Test Reports: Provide manufacturer test reports indicating product compliance with indicated requirements.
   2. Manufacturer Instructions: Provide manufacturer's written installation instructions.
   3. Manufacturer's Field Service Reports: Provide site reports from authorized field service representative, indicating observation of weather barrier assembly installation.

F. Closeout Submittals
   1. Refer to Section 017800 - Closeout Procedures and Submittals, for submittal procedures.
   2. Weather Barrier Warranty: Manufacturer's executed warranty form with authorized signatures and endorsements indicating date of Substantial Completion.

1.6 QUALITY ASSURANCE

A. Qualifications
   1. Manufacturer Qualifications: Company specializing in manufacturing products specified in this section, with not less than 10 years of documented experience.

2. Installer Qualifications: Company specializing in performing the work of this section with minimum 5 years of experience.
   a. Installers and supervisors shall be trained and approved by manufacturer.
   b. Installer shall be licensed by ABAA according to ABAA's Quality Assurance Program and shall employ ABAA-certified installers and supervisors on Project.
3. Installation shall be in accordance with weather barrier manufacturer's installation guidelines and recommendations.
4. Source Limitations: Provide weather barrier and accessory materials produced by single manufacturer.

B. Mock-up
   1. Install mock-up using approved weather barrier assembly including fasteners, flashing, tape and related accessories per manufacturer's current printed instructions and recommendations.
      a. Mock-up size: 10 feet by 10 feet.
      b. Mock-up Substrate: Match wall assembly construction, including window opening.
      c. Mock-up may remain as part of the work.
   2. Contact manufacturer's designated representative prior to weather barrier assembly installation, to perform required mock-up visual inspection and analysis as required for warranty.

C. Pre-installation Meeting
   1. Hold a pre-installation conference, two weeks prior to start of weather barrier installation. Attendees shall include Contractor, Architect, Engineer, Consultant, Installer, Owner's Representative, and Weather Barrier Manufacturer's Designated Representative.
   2. Review all related project requirements and submittals, status of substrate work and preparation, areas of potential conflict and interface, availability of weather barrier assembly materials and components, installer's training requirements, equipment, facilities and scaffolding, and coordinate methods, procedures and sequencing requirements for full and proper installation, integration and protection.

1.7 DELIVERY, STORAGE AND HANDLING

A. Refer to Section 016000 - Product Requirements.

B. Deliver weather barrier materials and components in manufacturer's original, unopened, undamaged containers with identification labels intact.

C. Store weather barrier materials as recommended by weather barrier manufacturer.

1.8 SCHEDULING

A. Review requirements for sequencing of installation of weather barrier assembly with installation of windows, doors, louvers and flashings to provide a weather-tight barrier assembly.

B. Schedule installation of weather barrier materials and exterior cladding within nine months of weather barrier assembly installation.

1.9 FIELD CONDITIONS

A. Maintain temperature and humidity recommended by the materials manufacturers before, during and after installation.

1.10 WARRANTY

A. See Section 01 7839 - Warranty and Bonds, for additional warranty requirements.

B. Special Warranty
   1. Special weather-barrier manufacturer's warranty for weather barrier for a period of ten (10) years from date of final weather barrier installation.
   2. Pre-installation meetings and jobsite observations by weather barrier manufacturer for warranty is required prior to assembly installation.

PART 2 – PRODUCTS

2.1 MANUFACTURER

A. Basis of Design: Contract Documents are based on products specified below to establish a standard of quality. Other acceptable manufacturers with products having equivalent characteristics may be considered, provided deviations are minor and design concept expressed in Contract Documents is not changed, as determined by the Architect.
   1. DuPont; 4417 Lancaster Pike, Chestnut Run Plaza 728, Wilmington, DE 19805; 1-800-44-TYVEK (8-9835); www.construction.tyvek.com.

B. Acceptable Manufacturers: Subject to compliance with requirements of Contract Documents, provide product by one of manufacturers listed alphabetically below. If not listed, submit as substitution according to Conditions of the Contract and Division 1 Sections.
   1. James Hardie Building Products, Inc Engineered for ClimateTM HardieWrapTM weather barrier.: www.jameshardie.com.
   2. VaproShield, LLC; WrapShield: www.vaproshield.com.
   3. Pactiv Corporation; GreenGuard; RainDrop Building Wrap: greenguard.pactiv.com.

C. Substitutions: See Section 012500 - Substitution Procedures.

2.2 MATERIALS

A. Basis of Design: spunbonded polyolefin, non-woven, non-perforated, weather barrier is based upon DuPont™ Tyvek® CommercialWrap® and related assembly components.

B. Performance Characteristics:
   1. Air Penetration: 0.001 cfm/ft2 at 75 Pa, when tested in accordance with ASTM E2178. Type I per ASTM E1677. =0.04 cfm/ft2 at 75 Pa, when tested in accordance with ASTM E2357.
   2. Water Vapor Transmission: 28 perms, when tested in accordance with ASTM E96, Method B.
   3. Water Penetration Resistance: Minimum 280 cm when tested in accordance with AATCC Test Method 127.
   4. Water Resistance: Comply with applicable water-resistive requirements of ICC-ES Acceptance Criteria AC38.
   5. Basis Weight: Minimum 2.7 oz/yd2, when tested in accordance with TAPPI Test Method T-410.
   6. Air Resistance: Air infiltration at >1500 seconds, when tested in accordance with TAPPI Test Method T-460.
   7. Tensile Strength: Minimum 38/35 lbs/in., when tested in accordance with ASTM D882, Method A.
   8. Tear Resistance: 12/10 lbs., when tested in accordance with ASTM D1117.

9. Surface Burning Characteristics: Class A, when tested in accordance with ASTM E84. Flame Spread: 10, Smoke Developed: 10.

2.3 ACCESSORIES

A. Seam Tape: As recommended by the weather barrier manufacturer.

B. Fasteners:
   1. Wood Frame Construction
      a. Nail Caps: #4 nails with large 1-inch plastic cap fasteners, or 1-inch plastic cap staples with leg length sufficient to achieve a minimum penetration of 5/8-inch into the wood stud.

C. Sealants
   1. Provide sealants that comply with ASTM C920, elastomeric polymer sealant to maintain watertight conditions.
   2. Products: Sealants recommended by the weather barrier manufacturer.
   3. D. Adhesives:
   4. Provide adhesive recommended by weather barrier manufacturer.
   5. Products: Adhesives recommend by the weather barrier manufacturer.

D. Primers:
   1. Provide flashing manufacturer recommended primer to assist in adhesion between substrate and flashing.
   2. Products: Primers recommended by the flashing manufacturer.

E. Flashing
   1. Flexible membrane flashing materials for window openings and penetrations recommended by manufacturer.
   2. Straight flashing membrane materials for flashing windows and doors and sealing penetrations such as masonry ties, etc. recommended by manufacturer.
   3. Thru-Wall flashing membrane materials for flashing at changes in direction or elevation (shelf angles, foundations, etc.) and at transitions between different assembly materials.
   4. Preformed Inside and Outside Corners and End Dams: Preformed three-dimensional shapes to complete the flashing system used in conjunction with Thru-Wall Flashing.

PART 3 – EXECUTION

3.1 EXAMINATION

A. Verify substrate and surface conditions are in accordance with weather barrier manufacturer recommended tolerances prior to installation of weather barrier and accessories.

3.2 INSTALLATION – WEATHER BARRIER

A. Install weather barrier over exterior face of exterior wall substrate in accordance with manufacturer recommendations.

B. Install weather barrier prior to installation of windows and doors.

C. Start weather barrier installation at a building corner, leaving 6-12 inches of weather barrier extended beyond corner to overlap.

D. Install weather barrier in a horizontal manner starting at the lower portion of the wall surface with subsequent layers installed in a shingling manner to overlap lower layers. Maintain weather barrier plumb and level.

E. Sill Plate Interface: Extend lower edge of weather barrier over sill plate interface 3-6 inches. Secure to foundation with elastomeric sealant as recommended by weather barrier manufacturer.

F. Window and Door Openings: Extend weather barrier completely over openings.

G. Overlap weather barrier
   1. Exterior corners: minimum 12 inches.
   2. Seams: minimum 6 inches.

H. Apply flashing to weather barrier membrane prior to installing cladding anchors.

3.3 SEAMING

A. Seal seams of weather barrier with seam tape at all vertical and horizontal overlapping seams.

B. Seal any tears or cuts as recommended by weather barrier manufacturer.

3.4 OPENING PREPARATION (FOR USE WITH NON-FLANGED WINDOWS - ALL CLADDING TYPES)

A. Flush cut weather barrier at edge of sheathing around full perimeter of opening.

B. Cut a head flap at 45-degree angle in the weather barrier at window head to expose 8 inches of sheathing. Temporarily secure weather barrier flap away from sheathing with tape.

3.5 FLASHING (FOR USE WITH NON-FLANGED WINDOWS - ALL CLADDING TYPES)

A. Cut flexible flashing a minimum of 12 inches longer than width of sill rough opening.

B. Cover horizontal sill by aligning flexible flashing edge with inside edge of sill. Adhere to rough opening across sill and up jambs a minimum of 6 inches. Secure flashing tightly into corners by working in along the sill before adhering up the jambs.

C. Fan flexible flashing at bottom corners onto face of wall. Firmly press in place. Mechanically fasten fanned edges.

D. Apply 9-inch wide strips of flashing at jambs. Align flashing with interior edge of jamb framing. Start flashing at head of opening and lap sill flashing down to the sill.

E. Spray-apply primer to top 6 inches of jambs and exposed sheathing.

F. Install flexible flashing at opening head using same installation procedures used at sill. Overlap jamb flashing a minimum of 2 inches.

G. Coordinate flashing with window installation.

H. On exterior, install backer-rod in joint between window frame and flashed rough framing. Apply sealant at jambs and head, leaving sill unsealed. Apply sealants in accordance with sealant manufacturer’s instructions and ASTM C1193.

I. Position weather barrier head flap across head flashing. Adhere using flashing over the 45-degree seams.

J. Tape top of window in accordance with manufacturer recommendations.

K. On interior, install backer rod in joint between frame of window and flashed rough framing. Apply sealant around entire window to create air seal. Apply sealant in accordance with sealant manufacturer's instructions and ASTM C1193.

3.6 OPENING PREPARATION (FOR USE WITH FLANGED WINDOWS)

A. Cut weather barrier in an "-cut" pattern. A modified -cut is also acceptable.
   1. Cut weather barrier horizontally along the bottom and top of the window opening.
   2. From the top center of the window opening, cut weather barrier vertically down to the sill..
   3. 3, Fold side and bottom weather barrier flaps into window opening and fasten.

B. Cut a head flap at 45-degree angle in the weather barrier at window head to expose 8 inches of sheathing. Temporarily secure weather barrier flap away from sheathing with tape.

3.7 FLASHING (FOR USE WITH FLANGED WINDOWS)

A. Cut flexible flashing a minimum of 12 inches longer than width of sill rough opening.

B. Cover horizontal sill by aligning flexible flashing edge with inside edge of sill. Adhere to rough opening across sill and up jambs a minimum of 6 inches. Secure flashing tightly into corners by working in along the sill before adhering up the jambs.

C. Fan flexible flashing at bottom corners onto face of wall. Firmly press in place. Mechanically fasten fanned edges if necessary.

D. On exterior, apply continuous bead of sealant to wall or backside of window mounting flange across jambs and head. Do not apply sealant across sill.

E. Install window according to manufacturer's instructions.

F. Apply strips of flashing at jambs overlapping entire mounting flange. Extend jamb flashing 1-inch above top of rough opening and below bottom edge of sill flashing.

G. Apply strip of flashing as head flashing overlapping the mounting flange. Head flashing should extend beyond outside edges of both jamb flashings.

H. Position weather barrier head flap across head flashing. Adhere flashing over the 45-degree seams.

I. Tape head flap in accordance with manufacturer recommendations.

J. On interior, install backer rod in joint between frame of window and flashed rough framing. Apply sealant around entire window to create air seal. Apply sealant in accordance with sealant manufacturer's instructions and ASTM C 1193.

3.8 THRU-WALL FLASHING INSTALLATION

A. Apply primer per manufacturer's written instructions.

B. Install preformed corners and end dams bedded in sealant in appropriate locations along wall.

C. Starting at a corner, remove release sheet and apply membrane to primed surfaces in lengths of 8 to 10 feet.

D. Extend membrane through wall and leave ¼ inch minimum exposed to form drip edge.

E. Roll flashing into place. Ensure continuous and direct contact with substrate.

F. Lap ends and overlap preformed corners 4 inches minimum. Seal all laps with sealant.

G. Trim exterior edge of membrane 1-inch and secure metal drip edge per manufacturer's written instructions.

H. Terminate membrane on vertical wall. Terminate into counterflashing.

I. Apply sealant bead at each termination.

3.9 THRU-WALL FLASHING / WEATHER BARRIER INTERFACE AT BASE OF WALL

A. Overlap thru-wall flashing with weather barrier by 6-inches.

B. Mechanically fasten bottom of weather barrier through top of thru-wall flashing.

C. Seal vertical and horizontal seams with tape or sealing membrane.

3.10 THRU-WALL FLASHING / WEATHER BARRIER INTERFACE AT SHELF ANGLE

A. Seal weather barrier to bottom of shelf angle with sealing membrane.

B. Apply thru-wall flashing to top of shelf angle. Overlap thru-wall flashing with weather barrier by 6-inches.

C. Seal bottom of weather barrier to thru-wall flashing with tape or sealing membrane.

3.11 THRU-WALL FLASHING / WEATHER BARRIER INTERFACE AT WINDOW HEAD

A. Cut flap in weather barrier at window head.

B. Prime exposed sheathing.

C. Install lintel as required. Verify end dams extend 4 inches minimum beyond opening.

D. Install end dams bedded in sealant.

E. Adhere 2 inches minimum thru-wall flashing to wall sheathing. Overlap lintel with thru-wall flashing and extend ¼ inch minimum beyond outside edge of lintel to form drip edge.

F. Apply sealant along thru-wall flashing edges.

G. Fold weather barrier flap back into place and tape bottom edge to thru-wall flashing.

H. Tape diagonal cuts of weather barrier.

I. Secure weather barrier flap with fasteners.

3.12 FIELD QUALITY CONTROL

A. Notify manufacturer's designated representative to obtain required periodic observations of weather barrier assembly installation.

3.13 PROTECTION

A. Protect installed weather barrier from damage.

END OF SECTION

SECTION 074113 - METAL ROOF PANELS

PART 1 GENERAL

1.1 SECTION INCLUDES

A. Prefinished, prefabricated structural standing seam roof system with continuous interlocking field formed seams.

1.2 RELATED REQUIREMENTS

A. Section 051200 - Structural Steel Framing: Roof framing and purlins.

B. Section 072100 - Building Insulation: Rigid wall and roof insulation.

C. Section 079200 - Joint Sealants: Sealing joints between metal roof panel system and adjacent construction.

1.3 REFERENCE STANDARDS

A. ASCE 7 - Minimum Design Loads and Associated Criteria for Buildings and Other Structures; Most Recent Edition Cited by Referring Code or Reference Standard.

B. ASTM B209/B209M - Standard Specification for Aluminum and Aluminum-Alloy Sheet and Plate; 2021a.

C. ASTM D1970/D1970M - Standard Specification for Self-Adhering Polymer Modified Bituminous Sheet Materials Used as Steep Roofing Underlayment for Ice Dam Protection; 2021.

D. ASTM E84 - Standard Test Method for Surface Burning Characteristics of Building Materials; 2021a.

E. ASTM E1592 - Standard Test Method for Structural Performance of Sheet Metal Roof and Siding Systems by Uniform Static Air Pressure Difference; 2005 (Reapproved 2017).

F. ASTM E1680 - Standard Test Method for Rate of Air Leakage Through Exterior Metal Roof Panel Systems; 2016.

G. IAS AC472 - Accreditation Criteria for Inspection Programs for Manufacturers of Metal Building Systems; 2018.

H. UL 580 - Standard for Tests for Uplift Resistance of Roof Assemblies; Current Edition, Including All Revisions.

1.4 SUBMITTALS

A. See Section 013000 - Administrative Requirements for submittal procedures.

B. Product Data: Manufacturer's data sheets on each product to be used, including:
   1. Storage and handling requirements and recommendations.
   2. Installation methods.
   3. Specimen warranty.

C. Shop Drawings: Include layouts of roof panels, details of edge and penetration conditions, spacing and type of connections, flashings, underlayments, and special conditions.
   1. Show work to be field-fabricated or field-assembled.

2. Include structural analysis signed and sealed by qualified structural engineer, indicating compliance of roofing system to specified loading conditions.

D. Selection Samples: For each roofing system specified, submit color chips representing manufacturer's full range of available colors and patterns.

E. Verification Samples: For each roofing system specified, submit samples of minimum size 12 inches square, representing actual roofing metal, thickness, profile, color, and texture.
1. Include typical panel joint in sample.
2. Include typical fastening detail.

F. Manufacturer's qualification statement.

G. Installer's qualification statement.

H. Test Reports: Indicate compliance of metal roofing system to specified requirements.

I. Warranty: Submit specified manufacturer's warranty and ensure that forms have been completed in Owner's name and are registered with manufacturer.

1.5 QUALITY ASSURANCE

A. Manufacturer Qualifications: Company specializing in manufacturing products specified in this section and with at least ten years of documented experience.
1. Accredited by IAS in accordance with IAS AC472.

B. Installer Qualifications: Company specializing in performing work of the type specified and with at least five years of documented experience.

1.6 DELIVERY, STORAGE, AND HANDLING

A. Provide strippable plastic protection on prefinished roofing panels for removal after installation.

B. Store roofing panels on project site as recommended by manufacturer to minimize damage to panels prior to installation.

1.7 FIELD CONDITIONS

A. Do not install metal roof panels, eave protection membrane or underlayment when surface, ambient air, or wind chill temperatures are below 45 degrees F.

1.8 WARRANTY

A. See Section 017836 - Warranties and Bonds for additional warranty requirements.

B. Finish Warranty: Provide 5-year manufacturer warranty against excessive degradation of exterior finish. Include provision for replacement of units with excessive fading, chalking, or flaking. Complete forms in Owner's name and register with warrantor.

C. Special Warranty: Provide 2-year warranty for weathertightness of roofing system, including agreement to repair or replace metal roof panels that fail to keep out water commencing on the Date of Substantial Completion. Complete forms in Owner's name and register with warrantor.

PART 2 PRODUCTS

2.1 MANUFACTURERS

A. Basis of Design:
   1. AEP Span, a Division of ASC Profiles
      a. Roof Panels: Span-lok hp.

B. Acceptable Architectural Metal Roof Panel Manufacturers:
   1. Berridge Manufacturing Company: www.berridge.com/#sle.
   2. Metl-Span, a Nucor Company: www.metlspan.com/#sle.
   3. Morin Corporation: www.morincorp.com/#sle.
   4. Or Approved Equal.

2.2 PERFORMANCE REQUIREMENTS

A. Metal Roof Panels: Provide complete roofing assemblies, including roof panels, clips, fasteners, connectors, and miscellaneous accessories, tested for compliance with the following minimum standards:
   1. Structural Design Criteria: Provide panel assemblies designed to safely support design loads at support spacing indicated, with deflection not to exceed L/180 of span length(L) when tested in accordance with ASTM E1592.
      a. Dead Loads: Weight of roofing system.
      b. Live Loads: As required by ASCE 7.
   2. Overall: Complete weathertight system tested and approved in accordance with ASTM E1592.
   3. Wind Uplift: Class 90 wind uplift resistance of UL 580.
   4. Air Infiltration: Maximum 0.06 cfm/sq ft at air pressure differential of 6.24 lbf/sq ft, when tested according to ASTM E1680.
   5. Thermal Movement: Design system to accommodate without deformation anticipated thermal movement over ambient temperature range of 100 degrees F.

2.3 METAL ROOF PANELS

A. Metal Roof Panels: AEP Span, a Division of ASC Profiles, Inc.; Preformed Metal Standing Seam Roofing - Span-Lok hp - (SL2HP216). Provide complete roofing assemblies, including roof panels, clips, fasteners, connectors, and miscellaneous accessories, tested for compliance with the following minimum standards:
   1. FM Rating: Class 1-90 according to FM Approvals Standard 4471.
   2. Air Infiltration: Tested in accordance with ASTM E1680.
      a. 0.022 cfm per linear foot of joint at static test pressure differential of 12.00 psf.
   3. Water Infiltration Under Static Pressure: Tested with sidelap sealant per ASTM E1646.
      a. No leakage through panel joints at 20.00 psf.
   4. Water Penetration: No leakage through panel sideseams and endlaps after six hours when tested according to ASTM E2140 at a static water pressure head of 6.00 inches.
   5. Thermal Movements: Accommodate thermal movement without buckling, joint opening, overstressing components, failure of connections, or other detrimental effects, through the following temperature changes:
      a. 120 degrees F, ambient.

b. 180 degrees F, material surface.

B. Panels: Factory-formed panels with factory-applied finish.
1. Aluminum Panels:
a. Alloy: Aluminum complying with ASTM B209/B209M; temper as required for forming.
b. Thickness: Minimum 20 gauge, 0.032 inch.
2. Profile: Standing seam, with minimum 2.0 inch seam height; concealed fastener system for field seaming with special tool.
3. Texture: Smooth.
4. Length: Full length of roof slope, without lapped horizontal joints.
5. Width: Maximum panel coverage of 16 inches.

2.4 ATTACHMENT SYSTEM

A. Concealed System: Provide manufacturer's standard stainless steel concealed anchor clips designed for specific roofing system and engineered to meet performance requirements, including anticipated thermal movement.

2.5 FABRICATION

A. Panels: Provide field fabricated panels and accessory items, using manufacturer's standard processes as required to achieve specified appearance and performance requirements.

B. Joints: Provide captive gaskets, sealants, or separator strips at panel joints to ensure weathertight seals, eliminate metal-to-metal contact, and minimize noise from panel movements.

2.6 FINISHES

A. Panel Finish: Provide primer and top finish coat on exposed faces; provide primer and backer coat on concealed faces of panels.

B. Zincalume® Plus protective coating for unpainted aluminum-zinc alloy coating.

C. Exterior Panel Color: As scheduled.

D. Seam Sealant: Factory apply high-grade butyl mastic sealant within the confines of panel’s female leg, designed to seal against adjacent male panel leg.

2.7 ACCESSORIES

A. Miscellaneous Sheet Metal Items: Provide flashings, trim, moldings, closure strips, preformed crickets, caps, equipment curbs, and similar sheet metal items of the same material, thickness, and finish as used for the roofing panels. Items completely concealed after installation may optionally be made of stainless steel.
1. Downspouts: Open face, rectangular profile.

B. Rib and Ridge Closures: Provide prefabricated, close-fitting components of steel with corrosion resistant finish or combination steel and closed-cell foam.

C. Panel Penetration Flashings: As recommended by panel manufacturer; designed to provide sufficient movement to prevent creation of points of fixity at penetrations..

D. Fasteners: Per manufacturer recommendation.

E. Profile Closures: Polyethylene foam, die-cut or formed to panel configuration.

F. Sealants:
   1. Exposed Sealant: Elastomeric; silicone, polyurethane, or silyl-terminated polyether/polyurethane.
   2. Concealed Sealant: Non-curing butyl sealant or tape sealant.
   3. Seam Sealant: Factory-applied, non-skinning, non-drying type.

G. Thermal Insulation: Refer to Section 07 2100.
   1. Thickness: As required to meet required thermal resistance.

H. Underlayment: specifically designed to withstand temperatures up to 250°F high-tensile strength, SBS[1] modified rubberized asphalt underlayment
   1. Type: Woven polypropylene with anti-slip polyolefin coating on both sides.
   2. Self Sealability: Nail sealability in accordance with ASTM D1970/D1970M.
   3. Products:
      a. AEP Span; Underlayment HT: www.aepspan.com:

PART 3 EXECUTION

3.1 EXAMINATION

A. Do not begin installation of preformed metal roof panels until substrates have been properly prepared.

B. If substrate preparation is the responsibility of another installer, notify Architect of unsatisfactory preparation before proceeding.

3.2 PREPARATION

A. Coordinate roofing work with provisions for roof drainage, flashing, trim, penetrations, and other adjoining work to ensure that completed roof will be free of leaks.

B. Remove protective film from surface of roof panels immediately prior to installation; strip film carefully to avoid damage to prefinished surfaces.

C. Separate dissimilar metals by applying a bituminous coating, self-adhering rubberized asphalt sheet, or other permanent method approved by metal roof panel manufacturer.

D. At locations where metal will be in contact with wood or other absorbent material subject to wetting, seal joints with sealing compound and apply one coat of heavy-bodied bituminous paint.

3.3 INSTALLATION

A. Overall: Install roofing system in accordance with metal roof panel manufacturer's instructions and recommendations, as applicable to specific project conditions; securely anchor components of roofing system in place allowing for thermal and structural movement.
   1. Install roofing system with concealed clips and fasteners, except as otherwise recommended by manufacturer for specific circumstances.
   2. Minimize field cutting of panels. Where field cutting is required, use methods that will not distort panel profiles. Use of torches for field cutting is prohibited.

B. Accessories: Install all components required for a complete roofing assembly, including flashings, trim, closure strips, preformed crickets, caps, equipment curbs, rib closures, ridge closures, and similar roof accessory items.

C. Roof Panels: Install metal roof panels in accordance with manufacturer's installation instructions, minimizing transverse joints except at junction with penetrations.
   1. Form weathertight standing seams incorporating concealed clips, using an automatic mechanical seaming device approved by panel manufacturer.
   2. Provide concealed clips at panel joints, and apply snap-on battens to provide weathertight joints.
   3. Install sealant or sealant tape at end laps and side joints as recommended by metal roof panel manufacturer.

D. Insulation: Install insulation between roof covering and supporting members to present a neat appearance; fold, staple, and tape seams unless otherwise approved by Architect.
   1. Install rigid or semi-rigid insulation in areas exposed to view.

3.4 CLEANING

A. See Section 017300 - Execution Requirements for additional requirements.

B. Clean exposed sheet metal work at completion of installation. Remove grease and oil films, excess joint sealer, handling marks, and debris from installation, leaving the work clean and unmarked, free from dents, creases, waves, scratch marks, or other damage to the finish.

3.5 PROTECTION

A. Do not permit storage of materials or roof traffic on installed roof panels. Provide temporary walkways or planks as necessary to avoid damage to completed work. Protect roofing until completion of project.

B. Touch-up, repair, or replace damaged roof panels or accessories before Date of Substantial Completion.

END OF SECTION

SECTION 074213 - METAL WALL PANELS

PART 2 PRODUCTS

1.1 METAL WALL PANEL SYSTEM

A. Wall Panel System: Factory fabricated prefinished metal panel system, site assembled.
   1. Provide exterior wall panels, interior liner panels, soffit panels, and subgirt framing assembly.
   2. Design and size components to support assembly dead loads, and to withstand live loads caused by positive and negative wind pressure acting normal to plane of wall.
   3. Maximum Allowable Deflection of Panel: L/180 for length(L) of span.
   4. Movement: Accommodate movement within system without damage to components or deterioration of seals, movement between system and perimeter components when subject to seasonal temperature cycling; dynamic loading and release of loads; and deflection of structural support framing.
   5. Drainage: Provide positive drainage to exterior for moisture entering or condensation occurring within panel system.
   6. Fabrication: Formed true to shape, accurate in size, square, and free from distortion or defects; pieces of longest practical lengths.
   7. Corners: Factory-fabricated in one continuous piece with minimum 2-inch returns.

B. Exterior Wall Panels:
   1. Profile: Vertical; style as indicated.
   2. Side Seams: Double-interlocked, tight-fitting, sealed with continuous gaskets.
   3. Panel Width: ___ inches.

C. Interior Liner Panels:
   1. Profile: Vertical; style as indicated.
   2. Side Seams: Interlocking, sealed with continuous bead of sealant.
   3. Panel Width: ___ inch.

D. Soffit Panels:
   1. Profile: Style as indicated, with venting provided.

E. Subgirt Framing Assembly:

F. Internal and External Corners: Same material, thickness, and finish as exterior sheets; profile to suit system; shop cut and factory mitered to required angles.

G. Expansion Joints: Same material, thickness and finish as exterior sheets; ___ gauge, ___ inch thick; manufacturer's standard brake formed type, of profile to suit system.

H. Trim: Same material, thickness and finish as exterior sheets; brake formed to required profiles.

I. Anchors: Galvanized steel.

END OF SECTION

SECTION 075419 - POLYVINYL-CHLORIDE ROOFING

PART 1 GENERAL

1.1 SECTION INCLUDES

A. Adhered polyvinyl-chloride (PVC) single-ply membrane roofing, over insulation.

B. Roof boards.

C. Vapor retarder.

D. Insulation.

E. Flashings.

F. Walkway protection.

1.2 RELATED REQUIREMENTS

A. Section 053100 - Steel Decking: Placement of acoustical insulation for deck flutes.

1.3 REFERENCE STANDARDS

A. ASCE 7 - Minimum Design Loads and Associated Criteria for Buildings and Other Structures; Most Recent Edition Cited by Referring Code or Reference Standard.

B. ASTM A653/A653M - Standard Specification for Steel Sheet, Zinc-Coated (Galvanized) or Zinc-Iron Alloy-Coated (Galvannealed) by the Hot-Dip Process; 2020.

C. ASTM C1177/C1177M - Standard Specification for Glass Mat Gypsum Substrate for Use as Sheathing; 2017.

D. ASTM C1289 - Standard Specification for Faced Rigid Cellular Polyisocyanurate Thermal Insulation Board; 2022.

E. ASTM C1371 - Standard Test Method for Determination of Emittance of Materials Near Room Temperature Using Portable Emissometers; 2015.

F. ASTM C1549 - Standard Test Method for Determination of Solar Reflectance Near Ambient Temperature Using a Portable Solar Reflectometer; 2016.

G. ASTM D751 - Standard Test Methods for Coated Fabrics; 2019.

H. ASTM D4434/D4434M - Standard Specification for Poly(Vinyl Chloride) Sheet Roofing; 2021.

I. ASTM E84 - Standard Test Method for Surface Burning Characteristics of Building Materials; 2021a.

J. ASTM E96/E96M - Standard Test Methods for Gravimetric Determination of Water Vapor Transmission Rate of Materials; 2021.

K. FM (AG) - FM Approval Guide; current edition.

L. FM DS 1-28 - Wind Design; 2016.

M. NRCA (RM) - The NRCA Roofing Manual; 2022.

N. NRCA (WM) - The NRCA Waterproofing Manual; 2005.

O. UL (DIR) - Online Certifications Directory; Current Edition.

1.4 ADMINISTRATIVE REQUIREMENTS

A. Preinstallation Meeting: Convene one week before starting work of this section.
   1. Review preparation, installation procedures, coordinating, and scheduling required with related work.

1.5 SUBMITTALS

A. See Section 013000 - Administrative Requirements for submittal procedures.

B. Product Data: Provide data indicating membrane materials, flashing materials, insulation, vapor retarder, surfacing, and fasteners.

C. Shop Drawings: Submit roofing shop drawings for unusual conditions.

D. Manufacturer's Certificate: Certify that products meet or exceed specified requirements.

E. Manufacturer's Installation Instructions: Indicate membrane seaming precautions and perimeter conditions requiring special attention.

F. Manufacturer's Field Reports: Indicate procedures followed, ambient temperatures, humidity, wind velocity during application, and supplementary instructions given.

G. Manufacturer's qualification statement.

H. Installer's qualification statement.

I. Testing firm's qualification statement.

J. Sustainable Design Documentation: Test report showing solar reflectance index of membrane.

K. Executed warranty.

1.6 QUALITY ASSURANCE

A. Manufacturer Qualifications: Company specializing in manufacturing products specified in this section with minimum three years of documented experience.

B. Installer Qualifications: Company specializing in performing work of this section with at least three years of documented experience.

1.7 DELIVERY, STORAGE, AND HANDLING

A. Deliver materials in manufacturer's original containers, dry and undamaged, with seals and labels intact.

B. Store materials in weather protected environment, clear of ground and moisture.

C. Ensure storage and staging of materials do not exceed static and dynamic load-bearing capacities of roof decking.

D. Protect foam insulation from direct exposure to sunlight.

1.8 FIELD CONDITIONS

A. Do not apply roofing membrane during unsuitable weather.

B. Do not apply roofing membrane when ambient temperature is below 40 degrees F or above ____ degrees F.

C. Do not apply roofing membrane to damp or frozen deck surface or when precipitation is expected or occurring.

D. Do not expose materials vulnerable to water or sun damage in quantities greater than can be weatherproofed the same day.

E. Schedule applications so that no partially completed sections of roof are left exposed at end of the day.

1.9 WARRANTY

A. See Section 017800 - Closeout Procedures and Submittals for additional warranty requirements.

B. Manufacturer Warranty: Provide 2-year manufacturer warranty for replacement of materials having manufacturing defects. Complete forms in Owner's name and register with manufacturer.

C. Special Warranty: Provide 5-year manufacturer's system warranty for repair or replacement of roofing that leaks or is damaged due to wind or other natural causes commencing on the Date of Substantial Completion. Complete forms in Owner's name and register with warrantor.

PART 2 PRODUCTS

2.1 MANUFACTURERS

A. Sika Sarnafil & Sika Corporation - Roofing.
   1. Address: 100 Dan Road, Canton, MA 02021.
   2. Telephone: (800) 451-2504 & Sales (866) 255-3738.
   3. Website: usa.sika.com/sarnafil/#sle.

2.2 APPLICATIONS

A. Polyvinyl-Chloride (PVC) Single-Ply Membrane Roofing:
   1. Adhered, over insulation.

2.3 MEMBRANE ROOFING SYSTEMS

A. Polyvinyl-Chloride (PVC) Adhered Roofing Systems:
   1. Sika Sarnafil Inc; Sarnafil G 410 EnergySmart.

2.4 PERFORMANCE REQUIREMENTS

A. Thermoplastic Polyvinyl-Chloride (PVC) Roofing Membrane: Single-ply, fully-adhered membrane over insulation with vapor retarder and cover boards as indicated on drawings.

B. Roofing Membrane Materials:
   1. Polyvinyl Chloride (PVC): Comply with ASTM D4434/D4434M, Type II for Sarnafil G fiberglass-reinforced adhered membranes.
      a. Thickness: 72 mil, 0.072 inch, minimum, in accordance with ASTM D751 test method.

2. Sheet Width: As selected by Architect.
   a. Adhered Application: Limit width to 120 inches, maximum, when ambient temperatures are less than 40 degrees F for an extended period during installation.
3. Solar Reflectance for EnergySmart Membranes and Color: At least 0.84 - White for initial and 0.74 - White for 3 years in accordance with ASTM C1549 test method.
4. Thermal Emittance for EnergySmart Membranes and Color: At least 0.86 - White for initial and 0.85 - White for 3 years in accordance with ASTM C1371 test method.
5. Color: White.
6. Factory Mutual Classification: Class 1, with windstorm resistance of 1-75 in accordance with FM DS 1-28, and secure attachment of roof deck and above-deck components in accordance with FM DS 1-29.
7. Wind Uplift Resistance:
   a. Designed to withstand wind uplift forces calculated in accordance with ASCE 7.
   b. Design Wind Speed: In accordance with local building code and authorities having jurisdiction (AHJ).
8. Roof Covering External Fire Resistance Classification: Class A, comply with UL (DIR).

C. Roofing Assembly: Components, from bottom-up and installed in coordination with roofing system.
   1. Roof deck boards.
   2. Vapor retarder.
   3. Insulation.
   4. Roof cover boards.
   5. Roofing membrane.

D. Insulation Type - Constant Thickness Application:
   1. For Adhered PVC Membrane:
      a. Polyisocyanurate (ISO) insulation board.

2.5 VAPOR RETARDERS

A. Vapor Retarder: Low density polyethylene vapor retarder/air barrier.
   1. Thickness: 10 mil, 0.010 inch, nominal.
   2. Water Vapor Transmission: 0.019 perm in accordance with ASTM E96/E96M.
   3. Products:
      a. Sika Sarnafil Inc; Vapor Retarder PE 10.

2.6 INSULATION

A. Polyisocyanurate (ISO) Board Insulation with Facers on Both Sides: Rigid, closed-cell, ISO insulation board complying with ASTM C1289.
   1. Facers: Fiber reinforced felt facers.
   2. Classifications:
      a. Type II:
         1) Class 1 - Faced with glass fiber reinforced cellulosic felt facers on both major surfaces of core foam.
         2) Compressive Strength:
            a) Classes 1-2-3, Grade 3 - 25 psi, minimum.
         3) Thermal Resistance: R-value, at 1-1/2 inch thick and 75 degrees F mean temperature, as follows:

a) Class 1, Grades 1-2-3 - 8.4, minimum.

3. Flame Spread Index (FSI): Class A, 25 to 60, when tested in accordance with ASTM E84.
4. Smoke Developed Index (SDI): Class A, 50 to 170, when tested in accordance with ASTM E84.
5. Board Size: 48 by 48 inches.
6. Board Thickness: As indicated on drawings.
7. Board Edges: Square.
8. Water Vapor Permeance: Less than 1.5 perm at 1 inch thick, and tested in accordance with ASTM E96/E96M.
9. Products:
   a. Sika Sarnafil Inc; Sarnatherm ISO.

2.7 ROOF BOARDS

A. Gypsum Roof Boards: Gypsum roof boards with fiberglass-mat facers primed on one side, complying with ASTM C1177/C1177M for single-ply adhered roof systems.
   1. Flame Spread Index (FSI): Class A, Zero, when tested in accordance with ASTM E84.
   2. Smoke Developed Index (SDI): Class A, Zero, when tested in accordance with ASTM E84.
   3. Board Size: 48 by 48 inches.
   4. Board Thickness: 1/2 inch, nominal.
   5. Compressive Strength: 700 to 1,000 psi, nominal.

2.8 INSULATION/ROOF BOARD ADHESIVES

2.9 ADHERED MEMBRANE ADHESIVES

A. Water-based dispersion adhesive used to adhere feltback membrane to substrate.
   1. Products:
      a. Sika Sarnafil Inc; Sarnacol-2121.

2.10 ATTACHMENT COMPONENTS

A. Attachment Plates for Insulation and Roof Boards:
   1. Stress Plate: 26 gauge, 0.0179 inch thick, 3- by 3- inch square or 3-inch round steel plate with galvalume coating, used with #12, #14, and #15 Sarnafasteners to attach Sarnatherm insulation and roof boards, gypsum roof boards, or other boards to roof deck before installation of PVC mechanically-attached or adhered roof membrane.
      a. Products:
         1) Sika Sarnafil Inc; Sarnaplate.

B. Fasteners:
   1. #12 Screws: Corrosion-resistant carbon steel fastener used with Sarnaplates within Sarnafil roof systems to attach Sarnatherm insulation and roof boards, gypsum roof boards, or other boards into steel decking, wood plank, or wood sheathing.
      a. Thread Diameter: 0.220 inch, nominal.
      b. Length: As indicated on drawings.
      c. Products:
         1) Sika Sarnafil Inc; Sarnafastener #12.
   2. #14 Screws: Corrosion-resistant carbon steel fastener used with other attachment plates within Sarnafil roof systems to attach Sarnafil S 327 membrane or Sarnatherm insulation and

roof boards, gypsum roof boards, or other boards into structural concrete, wood plank, or wood sheathing.
   a. Thread Diameter: 0.245 inch, nominal.
   b. Length: As indicated on drawings.
   c. Products:
      1) Sika Sarnafil Inc; Sarnafastener #14.
3. #15 Screws: Corrosion-resistant carbon steel fastener used with other attachment plates within Sarnafil roof systems to attach Sarnatherm insulation and roof boards, gypsum roof boards, or other boards into steel decking, wood plank, or wood sheathing.
   a. Thread Diameter: 0.265 inch, nominal.
   b. Length: As indicated on drawings.
   c. Products:
      1) Sika Sarnafil Inc; Sarnafastener #15 XP.

2.11 FLASHING

A. Wall/Curb Flashing: PVC membrane flashings.
   1. Products:
      a. Sika Sarnafil Inc; Sarnafil G 410.
      b. Sika Sarnafil Inc; Sarnafil G 410 SA Flashing Membrane.
      c. Sika Sarnafil Inc; Sarnafil G 459 Flashing Membrane.
      d. Sika Sarnafil Inc; Detail Membrane PVC.

B. Sheet Metal Flashing: PVC-coated, heat-weldable sheet metal for use as perimeter edge, wall, or curb flashing.
   1. Metal Sheet: Galvanized steel complying with ASTM A653/A653M, with G90/Z275 zinc coating and at least 24-gauge, 0.0239-inch thick base metal, and 20 mil, 0.020 inch thick PVC coating laminated on one side.
   2. Color: White.
   3. Products:
      a. Sika Sarnafil Inc; Sarnaclad.

C. Metal Coping:
   1. Metal coping with hold-down cleats and metal drain chairs for capping a parapet and used with either an adhered or mechanically attached roof system to secure and protect membrane flashing.
      a. Metal and Thickness:
      b. Leg Length: As indicated on drawings.
      c. Color: As selected by Architect.
      d. Products:
         1) Sika Sarnafil Inc; Wall Grip Coping.
   2. Metal coping with hold-down cleats and metal drain chairs for capping a parapet and used with either an adhered or mechanically attached roof system to secure and protect membrane flashing in higher wind speed areas.
      a. Metal and Thickness:
      b. Leg Length: As indicated on drawings.
      c. Color: As selected by Architect.
      d. Products:
         1) Sika Sarnafil Inc; Wall Grip Coping Plus.

2.12 WALKWAY PROTECTION

A. Chevron Textured Mat: Polyester reinforced, 96 mil, 0.096 inch thick, weldable PVC membrane with chevron textured surface embossment, used as a protection layer from rooftop traffic.
   1. Color: Light gray.
   2. Width: 39 inches, nominal.
   3. Tensile Strength: 275 psi in accordance with ASTM D751 test method.
   4. Products:
      a. Sika Sarnafil Inc; Sarnatred-V.

PART 3 EXECUTION

3.1 EXAMINATION

A. Verify that surfaces and site conditions are ready to receive this work.

B. Verify that roof deck and existing roof construction are structurally sound and able to provide proper support for new roofing system.

C. Verify roof deck surfaces are clean and smooth, flat, free of flaws, depressions, sharp edges, loose and foreign material, waves, projections, properly sloped, and suitable for installation of roof system.

D. Verify roof deck surfaces are dry and free of snow or ice, oil, grease, and other contaminants.

E. Verify that roof deck openings, curbs, and penetrations through roof decking such as drains and scuppers are solidly set, and cant strips, nailing strips, and reglets are properly placed.

3.2 PREPARATION

A. Owner's representative to verify that roof deck is properly secured to structural framing in accordance with local building code, and capable of resisting anticipated loads to that location.

B. Metal Deck:
   1. Install preformed acoustical glass fiber insulation strips in roof deck flutes in accordance with manufacturer's instructions; see Section 053100.
   2. Install Deck Sheathing on Metal Deck:
      a. Lay with long side at right angle to flutes; stagger end joints; provide support at ends.
      b. Cut sheathing cleanly and accurately at roof breaks and protrusions to provide smooth surface.
      c. Tape joints.
      d. Mechanically fasten sheathing to roof deck, in accordance with Factory Mutual recommendations and roofing manufacturer's instructions.
         1) Over entire roof area, fasten sheathing using six fasteners with washers per sheathing board.
         2) At roof perimeter to a distance of 4 feet in from edges, fasten sheathing using six fasteners with washers per board.

3.3 INSTALLATION

A. Perform work in accordance with manufacturer's instructions, NRCA (RM), and NRCA (WM) applicable requirements.

B. Do not apply roofing membrane during cold or wet weather conditions.

C. Do not apply roofing membrane when ambient temperature is outside the temperature range recommended by manufacturer.

D. Do not apply roofing membrane to damp or frozen deck surface or when precipitation is expected or occurring.

E. Do not expose materials vulnerable to water or sun damage in quantities greater than can be weatherproofed the same day.

F. Vapor Retarders:
   1. Install vapor retarder over deck surface in accordance with manufacturer's instructions.
      a. Overlap edges of sheets as required by manufacturer.
      b. Apply primer to substrate as required by manufacturer.
      c. Extend vapor retarder under cant strips and blocking to deck edge.
      d. Install flexible flashing from vapor retarder to air seal material of wall construction, lap, and seal to provide continuity of the air barrier plane.
   2. Ensure vapor retarder is clean and dry, continuous, and ready for application of insulation.

G. Insulation:
   1. Attachment of Insulation:
      a. Mechanically fasten first layer of insulation to deck in accordance with roofing manufacturer's instructions and Factory Mutual FM DS 1-28 requirements.
      b. Embed the second layer of insulation into full bed of adhesive in accordance with roofing manufacturer's instructions.
   2. Comply with wind uplift rating requirements and associated fastener patterns.
   3. Lay subsequent layers of insulation with joints staggered at least 12 inches from joints of preceding layer.
   4. Place tapered insulation to the required slope pattern in accordance with roofing manufacturer's instructions.
   5. On metal deck, place boards parallel to flutes with insulation board edges bearing on deck flutes.
   6. Lay boards with edges in moderate contact without forcing, and cut insulation to fit neatly to perimeter blocking and around penetrations through roof.
   7. Tape joints of insulation in accordance with roofing and insulation manufacturer's instructions.
   8. At roof drains, use factory-tapered boards to slope down to roof drains over a distance of 18 inches, minimum.
   9. Do not install more insulation than can be covered with membrane on same day.
   10. Insulation Over Membrane:
      a. Place insulation boards; butt in close contact. Place channel cut face down. Bevel insulation to allow snug fit at cant strips. Cut neatly around protrusions through roof.
      b. Install and fit perimeter restraint to minimize movement of insulation boards.

H. Roof Deck/Cover Boards:
   1. Mechanically fasten roof deck/cover boards in accordance with roofing manufacturer's instructions and Factory Mutual FM (AG) requirements.

I. Membrane:

1. Adhered Membrane Attachment:
   a. Roll out membrane, free from wrinkles or tears. Place sheet into place without stretching.
   b. Shingle joints on sloped substrate in direction of drainage.
   c. Fully Adhered Application: Apply adhesive to substrate at rate of ___ gallons per square foot. Fully embed membrane in adhesive except in areas directly over or within 3 inches of expansion joints. Fully adhere one roll before proceeding to adjacent rolls.
2. At intersections with vertical surfaces:
   a. Extend membrane over cant strips and up a minimum of 4 inches onto vertical surfaces.
   b. Fully adhere flexible flashing over membrane and up to nailing strips.
   c. Secure flashing to nailing strips at 4 inches on center.
   d. Insert flashing into reglets and secure.

J. Flashing: Install flashings concurrently with roof membrane; temporary flashings are not allowed without the prior written approval of Owner's Representative and manufacturer.
   1. Membrane Flashing: Adhere membrane flashing onto compatible, dry, and smooth surfaces free of dirt, dust, and debris; use caution to ensure adhesive fumes are not drawn into the building.
      a. Extend flashings at least 8 inches above finished roofing level.
      b. Mechanically fasten flashing membranes along the counter-flashed top edge with Sarnastop or approved Sarnadisc at 6 to 12 inches on center.
      c. Provide adhered flashings that exceed 45 inches in height with additional securement, unless applying G 410 SA membrane to plywood, DensDeck Prime, concrete masonry units, or cast-in-place concrete.
      d. Refer to Typical Flashing Procedures section of Sika Sarnafil Roofing Applicator Handbook for detailed installation instructions.
   2. Liquid Flashing: Due to the strong odor of liquid flashing, take the necessary precautions to prevent odors and/or vapors from entering the building interior including, but not limited to, turning off and sealing air intake vents and other means of ingress for odors and/or vapors during product application and curing.
      a. Prepare flashing surfaces to be in extremely clean condition.
      b. Pre-cut liquid flashing fleece to fit around vertical and horizontal penetration with at least 2-inch overlaps.
      c. Apply catalyzed liquid flashing with at least 55 mil, 0.055 inch thick base layer, and place pre-cut fleece onto wet liquid flashing and ensure fleece is saturated, and apply at least 25 mil, 0.025 inch thick finish layer over fleece.

K. Walkway: Refer to Walkway Installation section of Sika Sarnafil Roofing Applicator Handbook for detailed installation instructions.
   1. Chevron Textured Mat: Examine existing deck membrane seams to be covered by Sarnatred-V mat, and install walkway mat in straight line by either adhering and welding or just welding to roof membrane in accordance with manufacturer's installation instructions.
   2. Pyramid Textured Mat: Examine existing deck membrane seams to be covered by Sikaplan Walkway-20 mat, and install walkway mat in straight line by either adhering and welding or just welding to roof membrane in accordance with manufacturer's installation instructions.
   3. Open Grid Mat: Examine existing deck membrane seams to be covered by Crossgrip XTRA mat, and install loose-laid using connecting clips to attach roll ends together in accordance with manufacturer's installation instructions.

L. Perimeter Warning: Ensure that perimeter warning installation substrates are extremely clean.
   1. Tape: Apply warning tape with hand pressure to top of PVC roofing membrane in areas as indicated on drawings.
   2. Membrane: Apply warning membrane using hot-air welding to top of PVC roofing membrane in areas as indicated on drawings.

3.4 FIELD QUALITY CONTROL

A. See Section 014000 - Quality Requirements for additional requirements.

B. Owner will provide testing and inspection services, and Contractor will provide temporary construction and materials for testing.

C. Provide daily on-site attendance of roofing and insulation manufacturer's representative during installation of this work.

3.5 CLEANING

A. See Section 017000 - Execution and Closeout Requirements for additional requirements.

B. Remove bituminous markings from finished surfaces.

C. In areas where finished surfaces are soiled by work of this section, consult manufacturer of surfaces for cleaning advice and comply with their documented instructions.

D. Repair or replace defaced or damaged finishes caused by work of this section.

3.6 PROTECTION

A. Protect installed roofing and flashings from construction operations.

B. Where traffic must continue over the finished roof membrane, protect surfaces using durable materials.

END OF SECTION

SECTION 076200 - SHEET METAL FLASHING AND TRIM

PART 1 GENERAL

1.1 SECTION INCLUDES

A. Fabricated sheet metal items, including flashings, counterflashings, gutters, downspouts, sheet metal roofing, exterior penetrations, and other items indicated in Schedule.

B. Sealants for joints within sheet metal fabrications.

C. Precast concrete splash pads.

1.2 RELATED REQUIREMENTS

1.3 REFERENCE STANDARDS

A. AAMA 2605 - Voluntary Specification, Performance Requirements and Test Procedures for Superior Performing Organic Coatings on Aluminum Extrusions and Panels (with Coil Coating Appendix); 2020.

B. ASTM A653/A653M - Standard Specification for Steel Sheet, Zinc-Coated (Galvanized) or Zinc-Iron Alloy-Coated (Galvannealed) by the Hot-Dip Process; 2020.

C. ASTM B209/B209M - Standard Specification for Aluminum and Aluminum-Alloy Sheet and Plate; 2021a.

D. ASTM C920 - Standard Specification for Elastomeric Joint Sealants; 2018.

E. ASTM D2178/D2178M - Standard Specification for Asphalt Glass Felt Used in Roofing and Waterproofing; 2015a (Reapproved 2021).

F. ASTM D4586/D4586M - Standard Specification for Asphalt Roof Cement, Asbestos-Free; 2007 (Reapproved 2018).

G. CDA A4050 - Copper in Architecture - Handbook; current edition.

H. SMACNA (ASMM) - Architectural Sheet Metal Manual; 2012.

1.4 ADMINISTRATIVE REQUIREMENTS

A. Preinstallation Meeting: Convene one week before starting work of this section.

1.5 SUBMITTALS

A. See Section 013300 - Submittal Requirements for submittal procedures.

B. Shop Drawings: Indicate material profile, jointing pattern, jointing details, fastening methods, flashings, terminations, and installation details.

1.6 QUALITY ASSURANCE

A. Perform work in accordance with SMACNA (ASMM) and CDA A4050 requirements and standard details, except as otherwise indicated.

B. Fabricator and Installer Qualifications: Company specializing in sheet metal work with five years of documented experience.

1.7 DELIVERY, STORAGE, AND HANDLING

A. See Section 017419 - Construction Waste Management and Disposal for packaging waste requirements.

B. Stack material to prevent twisting, bending, and abrasion, and to provide ventilation. Slope metal sheets to ensure drainage.

C. Prevent contact with materials that could cause discoloration or staining.

PART 2 PRODUCTS

2.1 MANUFACTURERS

A. Sheet Metal Flashing and Trim Manufacturers:
   1. Hickman Edge Systems: www.hickmanedgesystems.com/#sle.

2.2 SHEET MATERIALS

A. Galvanized Steel: ASTM A653/A653M, with G90/Z275 zinc coating; minimum 24-gauge, 0.0239-inch thick base metal.

B. Pre-Finished Galvanized Steel: ASTM A653/A653M, with G90/Z275 zinc coating; minimum 24-gauge, 0.0239-inch thick base metal, shop pre-coated with PVDF coating.
   1. Polyvinylidene Fluoride (PVDF) Coating: Superior performing organic powder coating, AAMA 2605; multiple coat, thermally cured fluoropolymer finish system.

C. Pre-Finished Aluminum: ASTM B209/B209M, 3005 alloy, H12 or H14 temper; 18 gauge, 0.040 inch thick; plain finish shop pre-coated with silicone modified polyester coating.
   1. Polyvinylidene Fluoride (PVDF) Coating: Superior performing organic powder coating, AAMA 2605; pretreated metal with two-coat system including primer and color coat with at least 70 percent PVDF coating.
   2. Color: As indicated on drawings.

2.3 FABRICATION

A. Form sections true to shape, accurate in size, square, and free from distortion or defects.

B. Form pieces in longest possible lengths.

C. Hem exposed edges on underside 1/2 inch; miter and seam corners.

D. Form material with flat lock seams, except where otherwise indicated; at moving joints, use sealed lapped, bayonet-type or interlocking hooked seams.

E. Fabricate corners from one piece with minimum 18-inch long legs; seam for rigidity, seal with sealant.

F. Fabricate flashings to allow toe to extend 2 inches over roofing gravel. Return and brake edges.

2.4 GUTTER AND DOWNSPOUT FABRICATION

A. Gutters: Profile as indicated.

B. Downspouts: Profile as indicated.

C. Gutters and Downspouts: Size for rainfall intensity determined by a storm occurrence of 1 in 10 years in accordance with SMACNA (ASMM).

D. Accessories: Profiled to suit gutters and downspouts.
   1. Anchorage Devices: In accordance with SMACNA (ASMM) requirements.
   2. Gutter Supports: Brackets.
   3. Downspout Supports: Brackets.

E. Splash Pads: Precast concrete type, of size and profiles indicated; minimum 3,000 psi at 28 days, with minimum 5 percent air entrainment.

F. Seal metal joints.

2.5 EXTERIOR PENETRATION FLASHING PANELS

A. Flashing Panels for Exterior Wall Penetrations: Premanufactured components and accessories as required to preserve integrity of building envelope; suitable for conduits and facade materials to be installed.

2.6 ACCESSORIES

A. Fasteners: Galvanized steel, with soft neoprene washers.

B. Underlayment: ASTM D2178/D2178M, glass fiber roofing felt.

C. Primer: Zinc chromate type.

D. Concealed Sealants: Non-curing butyl sealant.

E. Exposed Sealants: ASTM C920; elastomeric sealant, with minimum movement capability as recommended by manufacturer for substrates to be sealed; color to match adjacent material.

F. Asphalt Roof Cement: ASTM D4586/D4586M, Type I, asbestos-free.

PART 3 EXECUTION

3.1 EXAMINATION

A. Verify roof openings, curbs, pipes, sleeves, ducts, and vents through roof are solidly set, reglets in place, and nailing strips located.

B. Verify roofing termination and base flashings are in place, sealed, and secure.

3.2 PREPARATION

A. Install starter and edge strips, and cleats before starting installation.

B. Install surface mounted reglets true to lines and levels, and seal top of reglets with sealant.

C. Back paint concealed metal surfaces with protective backing paint to a minimum dry film thickness of 15 mil, 0.015 inch.

3.3 INSTALLATION

A. Secure flashings in place using concealed fasteners, and use exposed fasteners only where permitted..

B. Apply plastic cement compound between metal flashings and felt flashings.

C. Fit flashings tight in place; make corners square, surfaces true and straight in planes, and lines accurate to profiles.

D. Exterior Flashing Receivers: Install in accordance with manufacturer's recommendations, and in proper relationship with adjacent construction, and as follows:

E. Solder metal joints for full metal surface contact, and after soldering wash metal clean with neutralizing solution and rinse with water.

F. Install snow guards 24 inch upslope from eaves and valleys.

G. Secure gutters and downspouts in place with concealed fasteners.

H. Slope gutters 1/4 inch per 10 feet, minimum.

I. Set splash pads under downspouts.

3.4 FIELD QUALITY CONTROL

A. See Section 014000 - Quality Requirements for field inspection requirements.

B. Inspection will involve surveillance of work during installation to ascertain compliance with specified requirements.

END OF SECTION

SECTION 077113 - PREMANUFACTURED METAL COPING AND EDGE SYSTEMS

PART 1 GENERAL

1.1 SUMMARY

A. Work included: Factory fabricated and finished coping system and edge system.

B. Work shall be performed by Roofing Contractor as integral part of roofing system assembly and warranty.

1.2 RELATED DOCUMENTS:

A. Section 042000 - Unit Masonry

B. Section 074113 - Metal Roof Panels

C. Section 075419 - PVC Thermoplastic Single-Ply Roofing

D. Section 076200 - Sheet Metal Flashing and Trim

1.3 REFERENCE STANDARDS

A. Factory Mutual (FM Global) (www.fmglobal.com).

B. Single Ply Roofing Industry (SPRI) (www.spri.org):

C. ANSI/SPRI/FM 4435/ES-1 – Wind Design Standard for Edge Systems Used with Low Slope Roofing Systems.

1.4 PREINSTALLATION MEETINGS

A. Convene preinstallation meeting 1 week before start of installation of coping system.

B. Require attendance of parties directly affecting Work of this Section, including Contractor, Architect, installer, and manufacturer's representative.

C. Review the Following:
1. Materials.
2. Examination of roof edge areas.
3. Installation.
4. Cleaning.
5. Protection.
6. Coordination with other Work, including roofing installation.

1.5 SUBMITTALS

A. See Section 013300 - Submittal Requirements, for submittal procedures.

B. Product Data: Provide Manufacturer's product and complete installation data for all materials in this Specification.

C. Shop Drawings: Show profiles, joining method, accessory location, anchorage and flashing details, adjacent construction interface, and dimensions.

D. Color Samples: Submit manufacturer's color samples of snap-on coping cap, consisting of complete set of metal color chips representing manufacturer's full range of available colors.

E. Installation Guide: The product Manufacturer shall provide a written installation guide.

F. Warranty Documentation: Submit manufacturer's standard warranty.

1.6 QUALITY ASSURANCE

A. Manufacturer's Qualifications: Manufacturer regularly engaged in the manufacturing of coping systems of similar type to that specified for a minimum of 5 years.

B. Installer's Qualifications:
   1. Installer regularly engaged in installation of coping systems of similar type to that specified for a minimum of 5 years.
   2. Use persons trained for installation of coping systems.

C. IBC 2018 / 1504.5: ANSI/SPRI ES-1 Use the current edition of ANSI/SPRI ES-1 Wind Design Standard for Edge Systems Used with Low Slope Roofing Systems. All configurations, gauges, attachments and other items shall meet or exceed testing and design criteria related to ES-1 and IBC 1504.5.

1.7 DELIVERY, STORAGE, AND HANDLING

A. Delivery Requirements: Deliver materials to site in manufacturer's original, unopened containers and packaging, with labels clearly identifying product name and manufacturer.

B. Storage and Handling Requirements:
   1. Store and handle materials in accordance with manufacturer's instructions.
   2. Keep materials in manufacturer's original, unopened containers and packaging until installation.
   3. Store materials in clean, dry area indoors.
   4. Do not store materials directly on floor or ground.
   5. Protect materials and finish during storage, handling, and installation to prevent damage.
   6. The Contractor shall report damaged material immediately to the delivering carrier and note such damage on the carrier's freight bill of lading.

C. Remove protective plastic surface film immediately after installation.

1.8 JOB CONDITONS

A. Verify that other trades with related work are complete before mounting coping covers.

B. Mounting surfaces shall be straight and secure; substrates shall be of proper width.

C. Refer to the Construction Documents, shop drawings and Manufacturer's installation instructions.

D. Coordinate installation with roof membrane Manufacturer's installation instructions before starting.

1.9 WARRANTY

A. Refer to Section 017836 - Warranties and Bonds for additional warranty requirements.

B. Special Warranty: Warranted in wind conditions up to 110 mph with a 20-year wind warranty.
   1. PermaSnap Coping System: Coping system shall not blow off, leak, or cause membrane roofing failure when installed in accordance with manufacturer's instructions.

PART 2 PRODUCTS

2.1 MANUFACTURERS

A. Basis of Design: Contract Documents are based on products specified below to establish a standard of quality. Other acceptable manufacturers with products having equivalent characteristics may be considered, provided deviations are minor and design concept expressed in Contract Documents is not changed, as determined by the Architect.
   1. OMG EdgeSystems, 4 Commerce Way, Arden, North Carolina 28704. Toll Free 800-892-9173. Phone 828-676-1700. www.omgedgesystems.com. info@omgroofing.com.

B. Acceptable Manufacturers: Subject to compliance with requirements of Contract Documents, provide product by one of manufacturers listed alphabetically below. If not listed, submit as substitution according to Conditions of the Contract and Division 1 Sections.
   1. Metal-Era Inc.; www.metalera.com.
   2. or Approved Equal

C. If the roofing membrane Manufacturer can provide Systems that are in conformance with this Specification, then they shall be provided by the roofing Manufacturer and included as part of the roofing system warranty.

2.2 PARAPET COPING SYSTEM

A. Coping System Type CP-1: “PermaSnap”.
   1. Description:
      a. Snap-on coping with intermittent clips for capping parapet walls.
      b. Watertight.
      c. Maintenance free.
      d. Does not require exposed fasteners or joint sealants.
   2. Tested: ANSI/SPRI/FM 4435/ES-1 test pressures up to 139 psf vertical and 82 psf horizontal..
   3. Approvals:
      a. UL Classified.
   4. Performance Characteristics:
      a. Snap-on Coping Cap Sections:
         1) Capable of expanding and contracting freely, while mechanically locked in place on clips.
         2) Lock to clips by mechanical pressure from concealed splices.
      b. Snap-on Coping Cap Joints: Underlayed with concealed splices capable of draining water.
   5. Wall Width: Indicated on the Drawings.
      a. Minimum: 6 inches.
      b. Maximum: 24 inches.

B. Snap-on Coping Cap:
   1. Material: 22-gauge galvanized steel.
   2. Formed Lengths: 10’-0”.
   3. Finish: Prefinished Kynar
   4. Color: Refer to Material Schedule and Drawings.
   5. Face Dimension: Indicated on the Drawings.
      a. Minimum: 4 inches.

b. Maximum: 12 inches.

6. Back Dimension: Indicated on the Drawings.
   a. Minimum: 3-1/2 inches.
   b. Maximum: 4 inches.

C. Intermittent Clips:
   1. Material: 20-gauge galvanized steel.
   2. Width: 12 inches.
   3. Fastener Holes: Slotted.

D. Springs: Steel, 6 inches wide.

E. Concealed Splices:
   1. Material: Same as snap-on coping cap.
   2. Finish and Color: Same as snap-on coping cap.
   3. Width: 6 inches.
   4. Integral gutter to channel water back to roof.

F. Fasteners:
   1. Universal Fasteners: E-coated, corrosion-resistant.
   2. Suitable for intended substrate.
   3. Provided by coping system manufacturer.
   4. No exposed fasteners.

G. Factory-Fabricated Accessories:
   1. Miters.
   2. End caps.
   3. End terms.
   4. Material, Finish, and Color: Same as snap-on coping cap.
   5. Fabrication: Metal-Lok.

PART 3 EXECUTION

3.1 EXAMINATION

A. Examine roof edge areas, including roofing and blocking, to receive coping system.

B. Verify surfaces to support coping system are clean, dry, flat, level from front to back, secure, and of proper dimensions.

C. Verify that coping and edge installation will not disrupt other trades. Verify that substrate is dry, clean and free of foreign matter.

D. Fully coordinate installation with roofing system Manufacturer’s requirements and recommendations.

E. Correct defects prior to any installation.

3.2 INSTALLATION

A. Install coping system in accordance with manufacturer’s instructions at locations indicated on the Drawings.

B. Shim areas of walls not level from front to back.

C. Fasteners: Install coping system using concealed fasteners in accordance with manufacturer's instructions.

D. Install concealed splices at all clip locations.

E. Thermal Movement: Leave 1/4-inch gap between snap-on coping cap sections to allow for thermal expansion and contraction.

F. Do not use sealant at splices.

G. Review lengths of straight pieces of snap-on coping cap before cutting to avoid creating relatively short sections adjacent to full-length sections.

H. Isolate coping system from ACQ treated wood blocking or other galvanically incompatible material with appropriate membrane material.

3.3 CLEANING

A. Clean coping system promptly after installation in accordance with manufacturer's instructions.

B. Remove clear protective vinyl film.

C. Do not use harsh cleaning materials or methods that could damage finish.

3.4 PROTECTION

A. Protect installed coping system to ensure that, except for normal weathering, coping system will be without damage or deterioration at time of Substantial Completion.

END OF SECTION

SECTION 077200 - ROOF ACCESSORIES

PART 1 GENERAL

1.1 SECTION INCLUDES

A. Roof hatches with access ladders.

B. Snow guards.

1.2 RELATED REQUIREMENTS

1.3 REFERENCE STANDARDS

A. FM (AG) - FM Approval Guide; current edition.

1.4 SUBMITTALS

A. See Section 013300 - Submittal Requirements for submittal procedures.

B. Product Data: Manufacturer's data sheets on each product to be used.
   1. Preparation instructions and recommendations.
   2. Storage and handling requirements and recommendations.
   3. Installation methods.
   4. Maintenance requirements.

C. Shop Drawings: Submit detailed layout developed for this project and provide dimensioned location and number for each type of roof accessory.
   1. Non-penetrating Rooftop Supports: Submit design calculations for loadings and spacings.
   2. Snow Guards: Submit design calculations for loadings and spacings based on manufacturer testing.
   3. Submit shop drawings sealed and signed by a Professional Engineer experienced in design of this type of work and licensed in Nevada.

D. Warranty Documentation:
   1. Submit manufacturer warranty.
   2. Ensure that forms have been completed in Owner's name and registered with manufacturer.

1.5 DELIVERY, STORAGE, AND HANDLING

A. Store products in manufacturer's unopened packaging until ready for installation.

B. Store products under cover and elevated above grade.

1.6 WARRANTY

A. See Section 017800 - Closeout Procedures and Submittals for additional warranty requirements.

PART 2 PRODUCTS

2.1 ROOF HATCHES AND VENTS

A. Roof Hatch Manufacturers:
   1. Best Access Doors: www.bestaccessdoors.com/#sle.

2. Basis of Design: Bilco Company; Type E (ladder access, 3 ft square, solid cover): www.bilco.com/#sle.
3. Milcor, Inc: www.milcorinc.com/#sle.
4. Precision Ladders, LLC: www.precisionladders.com/#sle.

2.2 SNOW GUARDS

A. Fence Type Snow Guard: Continuous snow guard; manufacturer's standard pipe, bar, channel, or solid rod, set in brackets or posts, with optional plates and metal trim to match roof.
   1. Brackets: Stainless steel.
   2. Solid Rod: Aluminum, mill finish.
      a. Outside Diameter: 3/8 inch.
      b. Threaded Couplings: Aluminum, mill finish, manufacturers standard.
      c. Ice Flags: Manufacturer's standard material.
      d. End Collars and Caps: Manufacturer's standard material.
   3. Products:
      a. Alpine SnowGuards; LedgeGuard-1.5 Inch Snow Guard: www.alpinesnowguards.com/#sle.
      b. LMCurbs; SnowGuard System: www.lmcurbs.com/#sle.
      c. Rocky Mountain Snow Guards, Inc; Drift II Corrugated 2-Pipe Bolt-Down Fence-Style Snow Guard Bracket: www.rockymountainsnowguards.com/#sle.

PART 3 EXECUTION

3.1 EXAMINATION

A. Do not begin installation until substrates have been properly prepared.

B. If substrate preparation is the responsibility of another installer, notify Architect of unsatisfactory preparation before proceeding.

3.2 PREPARATION

A. Clean surfaces thoroughly prior to installation.

B. Prepare surfaces using methods recommended by manufacturer for achieving acceptable results for applicable substrate under project conditions.

3.3 INSTALLATION

A. Install in accordance with manufacturer's instructions, in manner that maintains roofing system weather-tight integrity.

3.4 CLEANING

A. Clean installed work to like-new condition.

3.5 PROTECTION

A. Protect installed products until completion of project.

B. Touch-up, repair or replace damaged products before Date of Substantial Completion.

END OF SECTION

SECTION 078400 - FIRESTOPPING

PART 1 GENERAL

1.1 SECTION INCLUDES

A. Penetrations for the passage of duct, cable, cable tray, conduit, piping, electrical busways and raceways through fire-rated vertical barriers (walls and partitions), horizontal barriers (floor/ceiling assemblies), and vertical service shaft walls and partitions.

B. Acoustical Fire Rated Outlet Backer Pads.

C. Firestopping of joints and penetrations in fire-resistance-rated and smoke-resistant assemblies, whether indicated on drawings or not, and other openings indicated.

1.2 SYSTEM PERFORMANCE REQUIREMENTS

A. Penetrations: Provide and install firestopping systems that are produced to resist the spread of fire, and the passage of smoke and other gases according to requirements indicated, including but not limited to the following:
   1. Firestop all penetrations passing through fire resistance rated wall and floor assemblies and other locations as indicated on the drawings.
   2. Provide and install complete penetration firestopping systems that have been tested and approved by third party testing agency.
   3. F - Rated Through-Penetration Firestop Systems: Provide through-penetration firestop systems with F ratings indicated, as determined per ASTM E 814, but not less than one hour or the fire-resistance rating of the construction being penetrated.
   4. T - Rated Through-Penetration Firestop Systems: Provide firestop systems with T ratings, in addition to F ratings, as determined per ASTM E 814, where indicated..
   5. L - Rated Through-Penetration Firestop Systems: Provide firestop systems with L ratings, in addition to F and T ratings, as determined per UL 1479, where indicated.
   6. (Optional) W - Rated Through-Penetration Firestop Systems: Provide firestop systems with W Water Resistance ratings, in addition to F, T and L ratings, as determined per UL 1479, where indicated.

B. Where there is no specific third party tested and listed, classified firestop system available for a particular firestop configuration, the firestopping contractor shall obtain from the firestop manufacturer, an Current Engineering Judgment (EJ) or Equivalent Fire Resistance Rated Assembly (EFRRA) for submittal.

1.3 SUBMITTALS

A. See Section 013300 - Submittal Requirements, for submittal procedures.

B. Schedule of Firestopping: Provide a list each type of penetration, fire rating of the penetrated assembly, and firestopping test or design number.
   1. All approved firestopping assemblies including engineering judgments shall be provided and organized by trade.

C. Product Data: Provide data on product characteristics, performance ratings, and limitations.

D. Manufacturer's Installation Instructions: Indicate preparation and installation instructions.

E. Manufacturer's Certificate: Certify that products meet or exceed specified requirements.

F. Manufacturer's engineering judgment identification number and document details when no qualified tested system is available for an application. Engineering judgment must include both project name and contractor's name who will install firestop system as described in document.

G. Certificate from authority having jurisdiction indicating approval of materials used, where applicable.

H. Manufacturer's qualification statement.

I. Installer's qualification statement.

1.4 QUALITY ASSURANCE

A. Fire Testing: Provide firestopping assemblies of designs that provide the scheduled fire ratings when tested in accordance with ASTM E814, ASTM E119, ASTM 1479, ASTM E2307, and UL 2079.
   1. Listing in UL (FRD), FM (AG), or ITS (DIR) will be considered as constituting an acceptable test report.
   2. Valid evaluation report published by ICC Evaluation Service, Inc. (ICC-ES) at www.icc-es.org will be considered as constituting an acceptable test report.
   3. Submission of actual test reports is required for assemblies for which none of the above substantiation exists.

B. For those firestop applications that exist for which no qualified tested system is available through a manufacturer, an engineering judgment derived from similar qualified tested system designs or other tests will be submitted to local authorities having jurisdiction for their review and approval prior to installation. Engineering judgment documents must follow requirements set forth by the International Firestop Council.

C. Single Source Responsibility: Obtain firestop systems for each kind of penetration and construction condition indicated from a single primary firestop systems manufacturer.
   1. Materials of different manufacture than allowed by the tested and listed system shall not be intermixed in the same firestop system or opening.
   2. Tested and listed, classified firestop systems are to be used. If another manufacturer has a tested and listed system, then that system shall be used prior to an Engineering Judgment (EJ) or Equivalent Fire Resistance Rated Assembly (EFRRA).

D. Manufacturer Qualifications: Company specializing in manufacturing the products specified in this section with minimum five years documented experience.

E. Installer Qualifications: Company specializing in performing the work of this section and:
   1. Trained by the direct representative of the manufacturer.
   2. Approved by Factory Mutual Research under FM Standard 4991, Approval of Firestop Contractors, Underwriters Laboratories (UL) Approved Contractor, or meeting any two of the following requirements:.
      a. Verification of minimum three years documented experience installing work of this type.
      b. Verification of at least five satisfactorily completed projects of comparable size and type.
      c. Licensed by local authorities having jurisdiction (AHJ).

1.5 FIELD CONDITIONS

A. Comply with firestopping manufacturer's recommendations for temperature and conditions during and after installation; maintain minimum temperature before, during, and for three days after installation of materials.

B. Provide ventilation in areas where solvent-cured materials are being installed.

PART 2 PRODUCTS

2.1 MANUFACTURERS

A. Basis of Design: Contract Documents are based on products specified below to establish a standard of quality. Other acceptable manufacturers with products having equivalent characteristics may be considered, provided deviations are minor and design concept expressed in Contract Documents is not changed, as determined by the Architect.
   1. Hilti, Inc: www.us.hilti.com., 800-879-8000.

B. Acceptable Manufacturers: Subject to compliance with requirements of Contract Documents, provide product by one of manufacturers listed alphabetically below. If not listed, submit as substitution according to Conditions of the Contract and Division 1 Sections.
   1. 3M Fire Protection Products: www.3m.com/firestop.
   2. Specified Technologies Inc: www.stifirestop.com/#sle.

C. Substitutions: Refer to Section 012500 - Substitution Procedures.

2.2 FIRESTOPPING - GENERAL REQUIREMENTS

A. Firestopping Materials: Any materials meeting requirements.

B. Provide firestopping composed of components that are compatible with each other, the substrates forming openings, and the items, if any, penetrating the firestopping under conditions of service and application, as demonstrated by the firestopping manufacturer based on testing and field experience.

C. Provide components for each firestopping system that are needed to install fill material. Use only components specified by the firestopping manufacturer and approved by the qualified testing agency for the designated fire-resistance-rated systems.

D. Volatile Organic Compound (VOC) Content: Provide products having VOC content lower than that required by SCAQMD 1168.

E. Mold and Mildew Resistance: Provide firestopping materials with mold and mildew resistance rating of zero(0) in accordance with ASTM G21.

F. Primers, Sleeves, Forms, Insulation, Packing, Stuffing, and Accessories: Provide type of materials as required for tested firestopping assembly.

G. Fire Ratings: Refer to Drawings for required systems and ratings.

2.3 FIRESTOPPING ASSEMBLY REQUIREMENTS

A. Perimeter Fire Containment Firestopping: Use any system that has been tested according to ASTM E2307 to have fire resistance F Rating equal to required fire rating of the floor assembly.

1. Movement: Provide systems that have been tested to show movement capability as indicated.
2. Temperature Rise: Provide systems that have been tested to show T Rating as indicated.
3. Air Leakage: Provide systems that have been tested to show L Rating as indicated.
4. Where floor assembly is not required to have a fire rating, provide systems that have been tested to show L Rating as indicated.

B. Head-of-Wall Firestopping at Joints Between Non-Rated Floor and Fire-Rated Wall: Use any system that has been tested according to ASTM E 2079 to have fire resistance F Rating equal to required fire rating of floor or wall, whichever is greater.
   1. Movement: Provide systems that have been tested to show movement capability as indicated.

C. Floor-to-Floor (FF), Floor-to-Wall (FW), Head-of-Wall (HW), and Wall-to-Wall (WW) Joints, Except Perimeter, Where Both Are Fire-Rated: Use system that has been tested according to ASTM E1966 or UL 2079 to have fire resistance F Rating equal to required fire rating of the assembly in which the joint occurs.
   1. Movement: Provide systems that have been tested to show movement capability as indicated.
   2. Air Leakage: Provide systems that have been tested to show L Rating as indicated.
   3. Watertightness: Provide systems that have been tested to show W Rating as indicated.
   4. Listing by FM (AG), ITS (DIR), UL (DIR), or UL (FRD) in their certification directories will be considered evidence of successful testing.

D. Through Penetration Firestopping: Use any system that has been tested according to ASTM E 814 to have fire resistance F Rating equal to required fire rating of penetrated assembly.
   1. Temperature Rise: Provide systems that have been tested to show T Rating as indicated.
   2. Air Leakage: In addition, provide systems that have been tested to show L Rating as indicated on drawings.
   3. Watertightness: In addition, provide systems that have been tested to show W Rating as indicated on drawings.
   4. Listing by FM (AG), ITS (DIR), UL (DIR), or UL (FRD) in their certification directories will be considered evidence of successful testing.

2.4 FIRESTOPPING SYSTEMS

A. Firestopping: Any material meeting requirements.
   1. Fire Ratings: Use system that is listed by FM (AG), ITS (DIR), or UL (FRD) and tested in accordance with ASTM E814, ASTM E119, or UL 1479 with F Rating equal to fire rating of penetrated assembly and minimum T Rating Equal to F Rating and in compliance with other specified requirements.

2.5 ACOUSTICAL FIRE-RATED PUTTY PADS:

A. Use only backer pads that have been UL 1479 or ASTM E814 tested for specific fire-rated construction conditions conforming to construction assembly type, penetrating item type, and fire-rating involved for each separate instance.

B. Wall opening protective materials for use with U.L. listed metallic and specified nonmetallic outlet boxes, the following products are acceptable:
   1. Kinetics Noise Control Model IsoBacker: Acoustical Fire Rated Outlet Backer Pad.

C. Manufacturers:
   1. Kinetics Noise Control, Dublin OH; 877-457-2695.
   2. 3M Fire Barrier Moldable Putty; 3M Fire Protection Products

PART 3 EXECUTION

3.1 EXAMINATION

A. Verify openings are ready to receive the work of this section.
   1. Verify penetrations are properly sized and in suitable condition for application of materials.
   2. Surfaces to which firestop materials will be applied shall be free of dirt, grease, oil, rust, laitance, release agents, water repellents, and any other substances that may affect proper adhesion.
   3. Provide masking and temporary covering to prevent soiling of adjacent surfaces by firestopping materials.
   4. Comply with manufacturer's recommendations for temperature and humidity conditions before, during and after installation of firestopping.
   5. Do not proceed until unsatisfactory conditions have been corrected.

3.2 PREPARATION

A. Clean substrate surfaces of dirt, dust, grease, oil, loose material, or other materials that could adversely affect bond of firestopping material.

B. Remove incompatible materials that could adversely affect bond.

C. Install backing materials to prevent liquid material from leakage.

3.3 COORDINATION

A. Coordinate construction of openings, penetrations and construction joints to ensure that the fire stop systems are installed according to specified requirements.

B. Coordinate sizing of sleeves, openings, core-drilled holes, or cut openings to accommodate through-penetration fire stop systems. Coordinate construction and sizing of joints to ensure that fire-resistive joint systems are installed according to specified requirements.

C. Coordinate fire stopping with other trades so that obstructions are not placed in the way prior to the installation of the fire stop systems.

D. Do not cover up through-penetration fire stop and joint system installations that will become concealed behind other construction until each installation has been examined by the building inspector.

3.4 INSTALLATION

A. Regulatory Requirements: Install firestop materials in accordance with UL Fire Resistance Directory or ITS Directory.

B. Install materials in manner described in fire test report and in accordance with manufacturer's instructions, completely closing openings.

C. Do not cover installed firestopping until inspected by authorities having jurisdiction.

D. Install labeling required by code.

3.5 FIELD QUALITY CONTROL

A. Independent Testing Agency: Inspection agency employed and paid by Owner, will examine penetration firestopping in accordance with ASTM E2174 and ASTM E2393.

B. Repair or replace penetration firestopping and joints at locations where inspection results indicate firestopping or joints do not meet specified requirements.

3.6 ACOUSTIC ACCESSORIES INSTALLATION

A. Apply acoustical putty pads completely around all electrical boxes and other items penetrating into acoustically rated walls, walls with acoustical insulation and all guestroom wall conditions.

3.7 FIELD QUALITY CONTROL

A. Examine sealed penetration areas to ensure proper installation before concealing or enclosing areas.

B. Keep areas of work accessible until inspection by applicable code authorities.

C. Inspection of through-penetration firestopping shall be performed in accordance with ASTM E2174, “Standard Practice for On-Site Inspection of Installed Fire Stops” and ASTM E2393 - 10a Standard Practice for On-Site Inspection of Installed Fire Resistive Joint Systems and Perimeter Fire Barriers. Inspection agency to examine firestopping and will determine, in general that firestopping has been installed in compliance with requirements of tested and listed firestop systems, and installation process conforms to FM 4911 - Standard for Approval of Firestop Contractors.
   1. The Inspector shall advise the Contractor of any deficiencies noted within one (1) working day.
   2. Do not proceed to enclose firestopping with other construction until inspection agency has verified that the firestop installation complies with the requirements.
   3. Where deficiencies are found, repair or replace the firestopping so that it complies with requirements of tested and listed systems.

D. Perform under this section patching and repairing of firestopping caused by cutting or penetrating of existing firestop systems already installed by other trades.

E. Manufacturer’s Field Services: During Installation, provide periodic destructive testing inspections to assure proper installation/application. After installation is complete, submit findings in writing indicating whether or not the installation of the tested system identified was installed correctly.

3.8 IDENTIFICATION & DOCUMENTATION

A. The firestop contractor is to supply documentation for each single application addressed. This documentation is to identify each penetration and joint location on the entire project.

B. Wall Identification: Where there is an accessible concealed floor, floor-ceiling or attic space, fire walls, fire barriers, fire partitions, smoke barriers and smoke partitions or any other wall required to have protected openings or penetrations shall be effectively and permanently identified with signs or stenciling in the concealed space. Such identification shall:
   1. Be in full compliance with Section 703.7 of the International Building Code; 2018.

2. Be located in accessible concealed floor, floor-ceiling or attic spaces.
   a. Height above the ceiling - from 6" to 12".
   b. Both Sides of the wall
3. Be located within 15 feet (4572 mm) of the end of each wall and at intervals not exceeding 30 feet (9144 mm) measured horizontally along the wall or partition.
4. Include lettering not less than 3 inch in height, with a minimum 3/8-inch (9.5 mm) stroke, incorporating the suggested wording: “FIRE AND/OR SMOKE BARRIER-PROTECT ALL OPENINGS,” or other wording indicating type of wall or partition.
   a. Color: bright orange or red.

3.9 CLEANING

A. Clean adjacent surfaces of firestopping materials.

3.10 PROTECTION

A. Protect adjacent surfaces from damage by material installation.

END OF SECTION

SECTION 079200 - JOINT SEALANTS

PART 1 GENERAL

1.1 SECTION INCLUDES

A. Nonsag gunnable joint sealants.

B. Self-leveling pourable joint sealants.

C. Joint backings and accessories.

D. Owner-provided field quality control.

1.2 RELATED REQUIREMENTS

A. Section 092116 - Gypsum Board Assemblies: Sealing acoustical and sound-rated walls and ceilings.

1.3 REFERENCE STANDARDS

A. ASTM C661 - Standard Test Method for Indentation Hardness of Elastomeric-Type Sealants by Means of a Durometer; 2015 (Reapproved 2022).

B. ASTM C794 - Standard Test Method for Adhesion-In-Peel of Elastomeric Joint Sealants; 2018.

C. ASTM C834 - Standard Specification for Latex Sealants; 2017.

D. ASTM C919 - Standard Practice for Use of Sealants in Acoustical Applications; 2022.

E. ASTM C920 - Standard Specification for Elastomeric Joint Sealants; 2018.

F. ASTM C1087 - Standard Test Method for Determining Compatibility of Liquid-Applied Sealants with Accessories Used in Structural Glazing Systems; 2016.

G. ASTM C1193 - Standard Guide for Use of Joint Sealants; 2016.

H. ASTM C1248 - Standard Test Method for Staining of Porous Substrate by Joint Sealants; 2018.

I. ASTM C1311 - Standard Specification for Solvent Release Sealants; 2014.

J. ASTM C1330 - Standard Specification for Cylindrical Sealant Backing for Use with Cold Liquid-Applied Sealants; 2018.

K. ASTM C1521 - Standard Practice for Evaluating Adhesion of Installed Weatherproofing Sealant Joints; 2019 (Reapproved 2020).

L. ASTM D2240 - Standard Test Method for Rubber Property--Durometer Hardness; 2015 (Reapproved 2021).

M. SCAQMD 1168 - Adhesive and Sealant Applications; 1989 (Amended 2017).

N. SWRI (VAL) - SWR Institute Validated Products Directory; Current Edition.

1.4 SUBMITTALS

A. See Section 013300 - Submittal Requirements, for submittal procedures.

B. Product Data: Submit manufacturer's technical datasheets for each product to be used; include the following:
   1. Physical characteristics, including movement capability, VOC content, hardness, cure time, and color availability.
   2. List of backing materials approved for use with the specific product.
   3. Substrates that product is known to satisfactorily adhere to and with which it is compatible.
   4. Substrates the product should not be used on.
   5. Substrates for which use of primer is required.
   6. Substrates for which laboratory adhesion and/or compatibility testing is required.
   7. Installation instructions, including precautions, limitations, and recommended backing materials and tools.
   8. Sample product warranty.
   9. Certification by manufacturer indicating that product complies with specification requirements.
   10. SWRI Validation: Provide currently available sealant product validations as listed by SWRI (VAL) for specified sealants.

C. Product Data for Accessory Products: Submit manufacturer's technical data sheet for each product to be used, including physical characteristics, installation instructions, and recommended tools.

D. Color Cards for Selection: Where sealant color is not specified, submit manufacturer's color cards showing standard colors available for selection.

E. Preconstruction Laboratory Test Reports: Submit at least four weeks prior to start of installation.

F. Installation Plan: Submit at least four weeks prior to start of installation.

G. Preinstallation Field Adhesion Test Plan: Submit at least two weeks prior to start of installation.

H. Field Quality Control Plan: Submit at least two weeks prior to start of installation.

I. Preinstallation Field Adhesion Test Reports: Submit filled out Preinstallation Field Adhesion Test Reports log within 10 days after completion of tests; include bagged test samples and photographic records.

J. Installation Log: Submit filled-out log for each length or instance of sealant installed.

K. Field Quality Control Log: Submit filled-out log for each length or instance of sealant installed, within 10 days after completion of inspections/tests; include bagged test samples and photographic records, if any.

L. Executed warranty.

1.5 QUALITY ASSURANCE

A. Maintain one copy of each referenced document covering installation requirements on site.

B. Manufacturer Qualifications: Company specializing in manufacturing the products specified in this section with minimum 10 years documented experience.

C. Installer Qualifications: Company specializing in performing the work of this section and with at least three years of documented experience.

D. Testing Agency Qualifications: Independent firm specializing in performing testing and inspections of the type specified in this section.

E. Preconstruction Laboratory Testing: Arrange for sealant manufacturer(s) to test each combination of sealant, substrate, backing, and accessories.
   1. Adhesion Testing: In accordance with ASTM C794.
   2. Compatibility Testing: In accordance with ASTM C1087.
   3. Allow sufficient time for testing to avoid delaying the work.
   4. Deliver sufficient samples to manufacturer for testing.
   5. Report manufacturer's recommended corrective measures, if any, including primers or techniques not indicated in product data submittals.

F. Installation Plan: Include schedule of sealed joints, including the following:
   1. Joint width indicated in Contract Documents.
   2. Joint depth indicated in Contract Documents; to face of backing material at centerline of joint.
   3. Method to be used to protect adjacent surfaces from sealant droppings and smears, with acknowledgment that some surfaces cannot be cleaned to like-new condition and therefore prevention is imperative.
   4. Approximate date of installation, for evaluation of thermal movement influence.
   5. Installation Log Form: Include the following data fields, with known information filled out.
      a. Unique identification of each length or instance of sealant installed.
      b. Location on project.
      c. Substrates.
      d. Sealant used.
      e. Stated movement capability of sealant.
      f. Primer to be used, or indicate no primer is used.
      g. Size and actual backing material used.
      h. Date of installation.
      i. Name of installer.
      j. Actual joint width; provide space to indicate maximum and minimum width.
      k. Actual joint depth to face of backing material at centerline of joint.
      l. Air temperature.

G. Preinstallation Field Adhesion Test Plan: Include destructive field adhesion testing of one sample of each combination of sealant type and substrate, except interior acrylic latex sealants, and include the following for each tested sample.
   1. Identification of testing agency.
   2. Name(s) of sealant manufacturer's field representatives who will be observing.
   3. Preinstallation Field Adhesion Test Log Form: Include the following data fields, with known information filled out.
      a. Substrate; if more than one type of substrate is involved in a single joint, provide two entries on form, for testing each sealant substrate side separately.
      b. Test date.
      c. Location on project.
      d. Sealant used.
      e. Stated movement capability of sealant.
      f. Test method used.

g. Date of installation of field sample to be tested.
h. Date of test.
i. Copy of test method documents.
j. Age of sealant upon date of testing.
k. Test results, modeled after the sample form in the test method document.
l. Indicate use of photographic record of test.

H. Field Quality Control Plan:
1. Visual inspection of entire length of sealant joints.
2. Nondestructive field adhesion testing of sealant joints, except interior acrylic latex sealants.
   a. Test the entire length of every sealant joint.
3. Destructive field adhesion testing of sealant joints, except interior acrylic latex sealant.
   a. For each different sealant and substrate combination, allow for one test every 100 feet in the first 1,000 linear feet, and one test per 1,000 linear feet thereafter, or once per floor on each elevation.
   b. If any failures occur in the first 1,000 linear feet, continue testing at frequency of one test per 500 linear feet at no extra cost to Owner.
4. Field testing agency's qualifications.
5. Field Quality Control Log Form: Show same data fields as on Preinstallation Field Adhesion Test Log, with known information filled out and lines for multiple tests per sealant/substrate combinations; include visual inspection and specified field testing; allow for possibility that more tests than minimum specified may be necessary.

I. Field Adhesion Test Procedures:
1. Allow sealants to fully cure as recommended by manufacturer before testing.
2. Have a copy of the test method document available during tests.
3. Record the type of failure that occurred, other information required by test method, and the information required on the Field Quality Control Log.
4. When performing destructive tests, also inspect the opened joint for proper installation characteristics recommended by manufacturer, and report any deficiencies.
5. Deliver the samples removed during destructive tests in separate sealed plastic bags, identified with project, location, test date, and test results, to Owner.
6. If any combination of sealant type and substrate does not show evidence of minimum adhesion or shows cohesion failure before minimum adhesion, report results to Architect.

J. Nondestructive Field Adhesion Test: Test for adhesion in accordance with ASTM C1521, using Nondestructive Continuous Method.
1. Record results on Field Quality Control Log.
2. Repair failed portions of joints.

K. Destructive Field Adhesion Test: Test for adhesion in accordance with ASTM C1521, using Destructive Tail Procedure.
1. Sample: At least 18 inches long.
2. Minimum Elongation Without Adhesive Failure: Consider the tail at rest, not under any elongation stress; multiply the stated movement capability of the sealant in percent by two; then multiply 1 inch by that percentage; if adhesion failure occurs before the 1-inch mark is that distance from the substrate, the test has failed.

3. If either adhesive or cohesive failure occurs before minimum elongation, take necessary measures to correct conditions and retest; record each modification to products or installation procedures.
4. Record results on Field Quality Control Log.
5. Repair failed portions of joints.

L. Field Adhesion Tests of Joints: Test for adhesion using most appropriate method in accordance with ASTM C1521, or another applicable method as recommended by manufacturer.

1.6 WARRANTY

A. See Section 017800 - Closeout Procedures and Submittals for additional warranty requirements.

B. Manufacturer Warranty: Provide 2-year manufacturer warranty for installed sealants and accessories that fail to achieve a watertight seal, exhibit loss of adhesion or cohesion, or do not cure. Complete forms in Owner's name and register with manufacturer.

C. Extended Correction Period: Correct defective work within 2-year period commencing on Date of Substantial Completion.

PART 2 PRODUCTS

2.1 MANUFACTURERS

A. Nonsag Sealants:
1. Dow Corning Corporation: www.dowcorning.com/construction/#sle.
2. Hilti, Inc: www.us.hilti.com/#sle.
3. Momentive Performance Materials, Inc (formerly GE Silicones): www.momentive.com.

B. Self-Leveling Sealants:
1. Dow; _____: www.dow.com/#sle.
2. Sika Corporation: www.usa-sika.com/#sle.
3. W.R. Meadows, Inc: www.wrmeadows.com.

C. Substitutions: Refer to Section 012500 - Substitution Procedures.

2.2 JOINT SEALANT APPLICATIONS

A. Scope:
1. Exterior Joints: Seal open joints, whether or not the joint is indicated on drawings, unless specifically indicated not to be sealed. Exterior joints to be sealed include, but are not limited to:
   a. Wall expansion and control joints.
   b. Joints between door, window, and other frames and adjacent construction.
   c. Joints between different exposed materials.
   d. Openings below ledge angles in masonry.
   e. Other joints indicated below.
2. Interior Joints: Do not seal interior joints unless specifically indicated to be sealed. Interior joints to be sealed include, but are not limited to, the following items.
   a. Joints between door, window, and other frames and adjacent construction.

b. In sound-rated wall and ceiling assemblies, gaps at electrical outlets, wiring devices, piping, and other openings; between wall/ceiling and other construction; and other flanking sound paths.
   1) Exception: Such gaps and openings in gypsum board, plaster, and _____ finished stud walls and suspended ceilings. See Section 092116 for additional information.
   2) Exception: Through-penetrations in sound-rated assemblies that are also fire-rated.
c. Other joints indicated below.

3. Do not seal the following types of joints:
   a. Intentional weep holes in masonry.
   b. Joints indicated to be treated with manufactured expansion joint cover, or some other type of sealing device.
   c. Joints where sealant is specified to be provided by manufacturer of product to be sealed.
   d. Joints where installation of sealant is specified in another section.
   e. Joints between suspended panel ceilings/grid and walls.

B. Exterior Joints: Use non-sag non-staining silicone sealant, unless otherwise indicated.
   1. Lap Joints in Sheet Metal Fabrications: Butyl rubber, non-curing.
   2. Lap Joints between Manufactured Metal Panels: Butyl rubber, non-curing.
   3. Control and Expansion Joints in Concrete Paving: Self-leveling polyurethane "traffic-grade" sealant.
   4. Wiring Slots in Concrete Paving: Self-leveling epoxy sealant.
   5. Cooling Tower and Fountain Basins: Non-sag polyurethane sealant for continuous immersion.

C. Interior Joints: Use non-sag polyurethane sealant, unless otherwise indicated.
   1. Wall and Ceiling Joints in Non-Wet Areas: Acrylic emulsion latex sealant.
   2. Wall and Ceiling Joints in Wet Areas: Non-sag polyurethane sealant for continuous liquid immersion.
   3. Floor Joints in Wet Areas: Non-sag polyurethane "non-traffic-grade" sealant suitable for continuous liquid immersion.
   4. Wall, Ceiling, and Floor Joints Where Tamper-Resistance is Required: Non-sag tamper-resistant silyl-terminated polyurethane sealant.
   5. Joints between Fixtures in Wet Areas and Floors, Walls, and Ceilings: Mildew-resistant silicone sealant; white.
   6. In Sound-Rated Assemblies: Acrylic emulsion latex sealant.
   7. Narrow Control Joints in Interior Concrete Slabs: Self-leveling epoxy sealant.
   8. Other Floor Joints: Self-leveling polyurethane "traffic-grade" sealant.

D. Interior Wet Areas: Bathrooms, restrooms, kitchens, food service areas, and food processing areas; fixtures in wet areas include plumbing fixtures, food service equipment, countertops, cabinets, and other similar items.

E. Sound-Rated Assemblies: Walls and ceilings identified as STC-rated, sound-rated, or acoustical.

F. Areas Where Tamper-Resistance is Required: As indicated on drawings.

2.3 JOINT SEALANTS - GENERAL

A. Sealants and Primers: Provide products having lower volatile organic compound (VOC) content than indicated in SCAQMD 1168.

B. Colors: As indicated on drawings.

2.4 NONSAG JOINT SEALANTS

A. Non-Staining Silicone Sealant: ASTM C920, Grade NS, Uses M and A; not expected to withstand continuous water immersion or traffic.
   1. Movement Capability: Plus 100 percent and minus 50 percent, minimum.
   2. Nonstaining to Porous Stone: Nonstaining to light-colored natural stone when tested in accordance with ASTM C1248.
   3. Dirt Pick-Up: Reduced dirt pick-up compared to other silicone sealants.
   4. Hardness Range: 15 to 35, Shore A, when tested in accordance with ASTM C661.
   5. Color: Match adjacent finished surfaces.
   6. Cure Type: Single-component, neutral moisture curing.
   7. Service Temperature Range: Minus 20 to 180 degrees F.
   8. Products:
      a. Dow; DOWSIL 756 SMS Building Sealant: www.dow.com/#sle.
      b. Dow; DOWSIL 790 Silicone Building Sealant: www.dow.com/#sle.
      c. Dow; DOWSIL 791 Silicone Weatherproofing Sealant: www.dow.com/#sle.
      d. Dow; DOWSIL 795 Silicone Building Sealant: www.dow.com/#sle.
      e. Momentive Performance Materials, Inc/GE Silicones; SCS9000 SilPruf NB - Non-Staining Silicone Weatherproofing Sealant: www.siliconeforbuilding.com/#sle.
      f. Pecora Corporation; Pecora 890 NST (Non-Staining Technology): www.pecora.com/#sle.
      g. Sika Corporation; Sikasil WS-295: www.usa.sika.com/#sle.

B. Silicone Sealant: ASTM C920, Grade NS, Uses M and A; not expected to withstand continuous water immersion or traffic.
   1. Movement Capability: Plus and minus 25 percent, minimum.
   2. Hardness Range: 15 to 35, Shore A, when tested in accordance with ASTM C661.
   3. Color: To be selected by Architect from manufacturer's standard range.
   4. Cure Type: Single component, neutral moisture curing.
   5. Service Temperature Range: Minus 65 to 180 degrees F.

C. Mildew-Resistant Silicone Sealant: ASTM C920, Grade NS, Uses M and A; single component, mildew resistant; not expected to withstand continuous water immersion or traffic.
   1. Color: White.

D. Silyl-Terminated Polyether (STPE) and Polyurethane (STPU) Sealant: ASTM C920, Grade NS, Uses M and A; single component; not expected to withstand continuous water immersion or traffic.
   1. Movement Capability: Plus and minus 50 percent, minimum.
   2. Color: To be selected by Architect from manufacturer's standard range.
   3. Service Temperature Range: Minus 75 to 300 degrees F.

E. Tamper-Resistant, Silyl-Terminated Polyurethane (STPU) Sealant: ASTM C920, Grade NS, Uses M and A; single component; not expected to withstand continuous water immersion or traffic.
   1. Movement Capability: Plus and minus ___ percent, minimum
   2. Hardness Range: 25 to 30, Shore A, when tested in accordance with ASTM C661.
   3. Color: To be selected by Architect from manufacturer's standard range.
   4. Products:

F. Polyurethane Sealant: ASTM C920, Grade NS, Uses M and A; single or multi-component; not expected to withstand continuous water immersion or traffic.
   1. Movement Capability: Plus and minus ____ percent, minimum.
   2. Hardness Range: 20 to 35, Shore A, when tested in accordance with ASTM C661.
   3. Color: To be selected by Architect from manufacturer's standard range.
   4. Service Temperature Range: Minus 40 to 180 degrees F.

G. Polyurethane Sealant for Continuous Water Immersion: ASTM C920, Grade NS, Uses M and A; single or multi-component; explicitly approved by manufacturer for continuous water immersion; suitable for traffic exposure when recessed below traffic surface .
   1. Movement Capability: Plus and minus 35 percent, minimum.
   2. Hardness Range: 20 to 35, Shore A, when tested in accordance with ASTM C661.
   3. Color: To be selected by Architect from manufacturer's standard range.
   4. Service Temperature Range: Minus 40 to 180 degrees F.

H. Tamper-Resistant Polyurethane Sealant: ASTM C920, Grade NS, Uses M, G, and A; single or multi-component; not expected to withstand continuous water immersion or traffic.
   1. Movement Capability: Plus and minus 12-1/2 percent, minimum.
   2. Hardness Range: 50 to 60, Shore A, when tested in accordance with ASTM C661.
   3. Color: To be selected by Architect from manufacturer's standard range.
   4. Service Temperature Range: Minus 40 to 180 degrees F.

I. Epoxy Sealant: ASTM C920, Grade NS, Uses M and A; single or multi-component; not expected to withstand continuous water immersion or traffic.
   1. Hardness Range: 65 to 75, Shore D, when tested in accordance with ASTM C661.
   2. Color: To be selected by Architect from manufacturer's standard range.
   3. Service Temperature Range: 40 to 120 degrees F.

J. Polysulfide Sealant: ASTM C920, Grade NS, Uses M and A; single component; not expected to withstand continuous water immersion or traffic.
   1. Movement Capability: Plus and minus 25 percent, minimum.
   2. Hardness Range: 20 to 35, Shore A, when tested in accordance with ASTM C661.
   3. Color: To be selected by Architect from manufacturer's standard range.

K. Acrylic Emulsion Latex: Water-based; ASTM C834, single component, non-staining, non-bleeding, non-sagging; not intended for exterior use.
   1. Color: Standard colors matching finished surfaces, Type OP (opaque).

L. Non-Curing Butyl Sealant: Solvent-based; ASTM C1311; single component, non-sag, non-skinning, non-hardening, non-bleeding; vapor-impermeable; intended for fully concealed applications.

2.5 SELF-LEVELING JOINT SEALANTS

A. Self-Leveling Silicone Sealant: ASTM C920, Grade P, Uses M and A; single or multicomponent, explicitly approved by manufacturer for traffic exposure when recessed below traffic surface; not expected to withstand continuous water immersion.
   1. Movement Capability: Plus 100 percent, minus 50 percent, minimum.
   2. Hardness Range: 0 to 15, Shore A, when tested in accordance with ASTM C661.
   3. Color: To be selected by Architect from manufacturer's standard range.
   4. Service Temperature Range: Minus 40 to 180 degrees F.

B. Self-Leveling Polyurethane Sealant: ASTM C920, Grade P, Uses M and A; single or multi-component; explicitly approved by manufacturer for traffic exposure; not expected to withstand continuous water immersion .
   1. Movement Capability: Plus and minus 25 percent, minimum.
   2. Hardness Range: 35 to 55, Shore A, when tested in accordance with ASTM C661.
   3. Color: To be selected by Architect from manufacturer's standard range.
   4. Service Temperature Range: Minus 40 to 180 degrees F.

C. Self-Leveling Polyurethane Sealant for Continuous Water Immersion: Polyurethane; ASTM C920, Grade P, Uses M and A; single or multi-component; explicitly approved by manufacturer for traffic exposure and continuous water immersion.
   1. Movement Capability: Plus and minus 25 percent, minimum.
   2. Hardness Range: 35 to 55, Shore A, when tested in accordance with ASTM C661.
   3. Color: To be selected by Architect from manufacturer's standard range.
   4. Service Temperature Range: Minus 40 to 180 degrees F.

D. Self-Leveling Silyl-Terminated Polyether/Polyurethane (STPE/STPU) Sealant: ASTM C920, Grade P, Uses M and A; single component; explicitly approved by manufacturer for traffic exposure; not expected to withstand continuous water immersion.
   1. Movement Capability: Plus and minus 35 percent.
   2. Hardness Range: 30 to 55, Shore A, when tested in accordance with ASTM C661.
   3. Color: To be selected by Architect from manufacturer's standard range.
   4. Service Temperature Range: Minus 40 to 180 degrees F.

E. Self-Leveling Polysulfide Sealant: ASTM C920, Grade P, Uses M and A; multicomponent; explicitly approved by manufacturer for traffic exposure and continuous water immersion.
   1. Movement Capability: Plus and minus 25 percent.
   2. Hardness Range: 30 to 55, Shore A, when tested in accordance with ASTM C661.
   3. Color: To be selected by Architect from manufacturer's standard range.
   4. Service Temperature Range: Minus 40 to 180 degrees F.

F. Rigid Self-Leveling Polyurethane Joint Filler: Two part, low viscosity, fast setting; intended for cracks and control joints not subject to significant movement.
   1. Hardness Range: Greater than 100, Shore A, and 50 to 80, Shore D, when tested in accordance with ASTM C661.

G. Semi-Rigid Self-Leveling Epoxy Joint Filler: Epoxy or epoxy/polyurethane copolymer; intended for filling cracks and control joints not subject to significant movement; rigid enough to support concrete edges under traffic.
   1. Composition: Multicomponent, 100 percent solids by weight.
   2. Durometer Hardness: Minimum of 85 for Type A or 35 for Type D, after seven days when tested in accordance with ASTM D2240.
   3. Color: To be selected by Architect from manufacturer's standard colors.
   4. Joint Width, Minimum: 1/8 inch.
   5. Joint Width, Maximum: 1/4 inch.
   6. Joint Depth: Provide product suitable for joints from 1/8 inch to 2 inches in depth including space for backer rod.

H. Semi-Rigid Self-Leveling Polyurea Joint Filler: Two-component, 100 percent solids; intended for filling cracks and control joints not subject to significant movement; rigid enough to support concrete edges under traffic.
   1. Durometer Hardness, Type A: 75, minimum, after seven days when tested in accordance with ASTM D2240.
   2. Color: To be selected by Architect from manufacturer's standard colors.
   3. Joint Width, Minimum: 1/8 inch.
   4. Joint Width, Maximum: 3/4 inch.
   5. Joint Depth: Provide product suitable for joints from 1/8 inch to 1 inch in depth excluding space for backer rod.

2.6 ACCESSORIES

A. Backer Rod: Cylindrical cellular foam rod with surface that sealant will not adhere to, compatible with specific sealant used, and recommended by backing and sealant manufacturers for specific application.
   1. Type for Joints Not Subject to Pedestrian or Vehicular Traffic: ASTM C1330; Type O - Open Cell Polyurethane.
   2. Type for Joints Subject to Pedestrian or Vehicular Traffic: ASTM C1330; Type B - Bi-Cellular Polyethylene.
   3. Open Cell: 40 to 50 percent larger in diameter than joint width.
   4. Closed Cell and Bi-Cellular: 25 to 33 percent larger in diameter than joint width.

B. Backing Tape: Self-adhesive polyethylene tape with surface that sealant will not adhere to and recommended by tape and sealant manufacturers for specific application.

C. Masking Tape: Self-adhesive, nonabsorbent, nonstaining, removable without adhesive residue, and compatible with surfaces adjacent to joints and sealants.

D. Joint Cleaner: Noncorrosive and nonstaining type, type recommended by sealant manufacturer; compatible with joint forming materials.

E. Primers: Type recommended by sealant manufacturer to suit application; nonstaining.

PART 3 EXECUTION

3.1 EXAMINATION

A. Verify that joints are ready to receive work.

B. Verify that backing materials are compatible with sealants.

C. Verify that backer rods are of the correct size.

D. Preinstallation Adhesion Testing: Install a sample for each test location indicated in the test plan.
   1. Test each sample as specified in PART 1 under QUALITY ASSURANCE article.
   2. Notify Architect of date and time that tests will be performed, at least seven days in advance.
   3. Arrange for sealant manufacturer's technical representative to be present during tests.
   4. Record each test on Preinstallation Adhesion Test Log as indicated.

5. If any sample fails, review products and installation procedures, consult manufacturer, or take other measures that are necessary to ensure adhesion; retest in a different location; if unable to obtain satisfactory adhesion, report to Architect.
6. After completion of tests, remove remaining sample material and prepare joints for new sealant installation.

3.2 PREPARATION

A. Remove loose materials and foreign matter that could impair adhesion of sealant.

B. Clean joints, and prime as necessary, in accordance with manufacturer's instructions.

C. Perform preparation in accordance with manufacturer's instructions and ASTM C1193.

D. Mask elements and surfaces adjacent to joints from damage and disfigurement due to sealant work; be aware that sealant drips and smears may not be completely removable.

E. Concrete Floor Joints That Will Be Exposed in Completed Work: Test joint filler in an inconspicuous area to verify that it does not stain or discolor slab.

3.3 INSTALLATION

A. Install this work in accordance with sealant manufacturer's requirements for preparation of surfaces and material installation instructions.

B. Provide joint sealant installations complying with ASTM C1193.

C. Install acoustical sealant application work in accordance with ASTM C919.

D. Measure joint dimensions and size joint backers to achieve the following, unless otherwise indicated:
   1. Width/depth ratio of 2:1.
   2. Neck dimension no greater than 1/3 of the joint width.
   3. Surface bond area on each side not less than 75 percent of joint width.

E. Install bond breaker backing tape where backer rod cannot be used.

F. Install sealant free of air pockets, foreign embedded matter, ridges, and sags, and without getting sealant on adjacent surfaces.

G. Do not install sealant when ambient temperature is outside manufacturer's recommended temperature range, or will be outside that range during the entire curing period, unless manufacturer's approval is obtained and instructions are followed.

H. Nonsag Sealants: Tool surface concave, unless otherwise indicated; remove masking tape immediately after tooling sealant surface.

I. Concrete Floor Joint Filler: After full cure, shave joint filler flush with top of concrete slab.

3.4 FIELD QUALITY CONTROL

A. See Section 014000 - Quality Requirements for additional requirements.

B. Perform field quality control inspection/testing as specified in PART 1 under QUALITY ASSURANCE article.

C. Non-Destructive Adhesion Testing: If there are any failures in first 100 linear feet, notify Architect immediately.

D. Destructive Adhesion Testing: If there are any failures in first 1,000 linear feet, notify Architect immediately.

E. Remove and replace failed portions of sealants using same materials and procedures as indicated for original installation.

F. Repair destructive test location damage immediately after evaluation and recording of results.

3.5 POST-OCCUPANCY

A. Post-Occupancy Inspection: Perform visual inspection of entire length of project sealant joints at a time that joints have opened to their greatest width, i.e., at low temperature in thermal cycle. Report failures immediately and repair them.

END OF SECTION

SECTION 081113 - HOLLOW METAL DOORS AND FRAMES

PART 1 GENERAL

1.1 SECTION INCLUDES

A. Non-fire-rated hollow metal doors and frames.

B. Hollow metal frames for wood doors.

C. Fire-rated hollow metal doors and frames.

D. Thermally insulated hollow metal doors with frames.

E. Hollow metal borrowed lites glazing frames.

F. Accessories, including glazing.

1.2 RELATED REQUIREMENTS

A. Section 081416 - Flush Wood Doors.

B. Section 087100 - Door Hardware.

C. Section 088000 - Glazing: Glass for doors and borrowed lites.

D. Section 099000 - Painting and Coating: Field painting of Doors and Frames.

E. Section 28 15 00 - Access Control Hardware Devices.

1.3 ABBREVIATIONS AND ACRONYMS

A. ANSI: American National Standards Institute.

B. ASCE: American Society of Civil Engineers.

C. HMMA: Hollow Metal Manufacturers Association.

D. NAAMM: National Association of Architectural Metal Manufacturers.

E. NFPA: National Fire Protection Association.

F. SDI: Steel Door Institute.

G. UL: Underwriters Laboratories.

1.4 REFERENCE STANDARDS

A. ADA Standards - Americans with Disabilities Act (ADA) Standards for Accessible Design; 2010.

B. ANSI/SDI A250.3 - Test Procedure and Acceptance Criteria for Factory Applied Finish Coatings for Steel Doors and Frames; 2019.

C. ANSI/SDI A250.4 - Test Procedure and Acceptance Criteria for Physical Endurance for Steel Doors, Frames and Frame Anchors; 2018.

D. ANSI/SDI A250.6 - Recommended Practice for Hardware Reinforcing on Standard Steel Doors and Frames; 2020.

E. ANSI/SDI A250.8 - Specifications for Standard Steel Doors and Frames (SDI-100); 2017.

F. ANSI/SDI A250.10 - Test Procedure and Acceptance Criteria for Prime Painted Steel Surfaces for Steel Doors and Frames; 2020.

G. ASCE 7 - Minimum Design Loads and Associated Criteria for Buildings and Other Structures; Most Recent Edition Cited by Referring Code or Reference Standard.

H. ASTM A653/A653M - Standard Specification for Steel Sheet, Zinc-Coated (Galvanized) or Zinc-Iron Alloy-Coated (Galvannealed) by the Hot-Dip Process; 2020.

I. ASTM A1008/A1008M - Standard Specification for Steel, Sheet, Cold-Rolled, Carbon, Structural, High-Strength Low-Alloy, High-Strength Low-Alloy with Improved Formability, Required Hardness, Solution Hardened, and Bake Hardenable; 2021a.

J. ASTM A1011/A1011M - Standard Specification for Steel, Sheet and Strip, Hot-Rolled, Carbon, Structural, High-Strength Low-Alloy, High-Strength Low-Alloy with Improved Formability, and Ultra-High Strength; 2018a.

K. ASTM C143/C143M - Standard Test Method for Slump of Hydraulic-Cement Concrete; 2020.

L. ASTM C476 - Standard Specification for Grout for Masonry; 2020.

M. ASTM E1408 - Standard Test Method for Laboratory Measurement of the Sound Transmission Loss of Door Panels and Door Systems; 1991 (Reapproved 2000).

N. ASTM E90 - Standard Test Method for Laboratory Measurement of Airborne Sound Transmission Loss of Building Partitions and Elements; 2009 (Reapproved 2016).

O. ASTM E413 - Classification for Rating Sound Insulation; 2016.

P. BHMA A156.115 - Hardware Preparation In Steel Doors And Steel Frames; 2016.

Q. ICC A117.1-2009 - Accessible and Usable Buildings and Facilities; 2009.

R. ITS (DIR) - Directory of Listed Products; current edition.

S. NAAMM HMMA 830 - Hardware Selection for Hollow Metal Doors and Frames; 2002.

T. NAAMM HMMA 831 - Hardware Locations for Hollow Metal Doors and Frames; 2011.

U. NAAMM HMMA 840 - Guide Specifications For Receipt, Storage and Installation of Hollow Metal Doors and Frames; 2017.

V. NAAMM HMMA 860 - Guide Specifications for Hollow Metal Doors and Frames; 2018.

W. NAAMM HMMA 861 - Guide Specifications for Commercial Hollow Metal Doors and Frames; 2014.

X. NFPA 80 - Standard for Fire Doors and Other Opening Protectives; 2022.

Y. NFPA 252 - Standard Methods of Fire Tests of Door Assemblies; 2022.

Z. SDI 117 - Manufacturing Tolerances for Standard Steel Doors and Frames; 2019.

AA. SDI 111 - Recommended Selection & Usage Guide for Standard Steel Doors, Frames and Accessories; 2009.

AB. UL (DIR) - Online Certifications Directory; Current Edition.

AC. SDI 105 - Recommended Erection Instructions for Steel frames.

AD. SDI 122 - Installation and Troubleshooting Guide for Standard Steel Doors and Frames.

AE. SDI 124 - Maintenance of Standard Steel Doors and Frames.

AF. UL 10B - Standard for Fire Tests of Door Assemblies; Current Edition, Including All Revisions.

AG. UL 10C - Standard for Positive Pressure Fire Tests of Door Assemblies; Current Edition, Including All Revisions.

AH. UL 1784 - Standard for Air Leakage Tests of Door Assemblies; Current Edition, Including All Revisions.

1.5 SUBMITTALS

A. Refer to Section 013300 - Submittal Requirements, for submittal procedures.

B. Product Data: Materials and details of design and construction, hardware locations, reinforcement type and locations, anchorage and fastening methods, and finishes; and one copy of referenced standards/guidelines.

C. Shop Drawings: Details of each opening, showing elevations, glazing, frame profiles, and any indicated finish requirements.

D. Installation Instructions: Manufacturer's published instructions, including any special installation instructions relating to this project.

E. Manufacturer's Certificate: Certification that products meet or exceed specified requirements.

F. Manufacturer's Qualification Statement.

G. Installer's Qualification Statement.

H. Warranty: Executed in Owner's name.

1.6 QUALITY ASSURANCE

A. Source Limitations: Obtain hollow metal doors and frames through one source from a single manufacturer wherever possible.

B. Quality Standard: In addition to requirements specified, comply with ANSI/SDI A250.8, latest edition, "Recommended Specifications for Standard Steel Doors and Frames".

C. Manufacturer Qualifications: Company specializing in manufacturing the products specified in this section with minimum 10 years documented experience.

D. Manufacturer Qualifications: Provide hollow metal doors and frames from SDI Certified manufacturer: https://steeldoor.org/sdi-certified/#sle.

E. Installer Qualifications: Company specializing in performing work of the type specified and with at least 5 years of documented experience.

F. Maintain at project site copies of reference standards relating to installation of products specified.

G. Provide a label for each fire rated and sound rated door indicating the testing agencies approval for the required rating. Do not cover or obscure the label in any way.

H. Energy Efficient Exterior Openings: Comply with minimum thermal ratings, based on ASTM C1363. Openings to be fabricated and tested as fully operable, thermal insulating door and frame assemblies.
   1. Thermal Performance (Exterior Openings): Independent testing laboratory certification for exterior door assemblies being tested in accordance with ASTM C1363 and meet or exceed the following requirements:
      a. Door Assembly Operable U-Factor and R-Value Ratings: U-Factor 0.34, R-Value 2.9, including insulated door, thermal-break frame and threshold.
   2. Air Infiltration (Exterior Openings): Independent testing laboratory certification for exterior door assemblies being tested in accordance with ASTM E283 to meet or exceed the following requirements:
      a. Rate of leakage of the door assembly shall not exceed 0.25 cfm per square foot of static differential air pressure of 1.567 psf (equivalent to 25 mph wind velocity).

1.7 MOCK-UPS

A. A. See Section 01 40 00 - Quality Requirements for additional requirements.

1.8 DELIVERY, STORAGE, AND HANDLING

A. Comply with NAAMM HMMA 840 or ANSI/SDI A250.8 (SDI-100) in accordance with specified requirements.

B. Protect with resilient packaging; avoid humidity build-up under coverings; prevent corrosion and adverse effects on factory applied painted finish.

1.9 WARRANTY

A. Refer to Section 01 78 36 - Warranties and Bonds, for additional warranty requirements.

B. Special Warranty
   1. Provide manufacturer's warranty for defects in material and workmanship for the life of the installation.
   2. Include removal of the defective door, hanging, hardware installation, finishing and labeling as required

PART 2 PRODUCTS

2.1 MANUFACTURERS

A. Basis of Design: Contract Documents are based on products specified below to establish a standard of quality. Other acceptable manufacturers with products having equivalent characteristics may be considered, provided deviations are minor and design concept expressed in Contract Documents is not changed, as determined by the Architect.
   1. Approved Steel Doors and Frames:
      a. Ceco Door, an Assa Abloy Group company: www.assaabloydss.com.
      b. Curries, an Assa Abloy Group company: www.assaabloydss.com.
      c. Republic Doors, an Allegion brand: www.republicdoor.com/#sle.
      d. Steelcraft, an Allegion brand: www.allegion.com/sle.

e. Or Equal.

B. Acceptable Manufacturers: Subject to compliance with requirements of Contract Documents, provide product by one of manufacturers listed alphabetically below. If not listed. submit as substitution according to Conditions of the Contract and Section 012500.

2.2 PERFORMANCE REQUIREMENTS

A. Requirements for Hollow Metal Doors and Frames:
1. Steel Sheet: Comply with one or more of the following requirements; galvannealed steel complying with ASTM A653/A653M, cold-rolled steel complying with ASTM A1008/A1008M, or hot-rolled pickled and oiled (HRPO) steel complying with ASTM A1011/A1011M, commercial steel (CS) Type B, for each.
2. Accessibility: Comply with ICC A117.1 and ADA Standards.
3. Exterior Door Top Closures: Flush end closure channel, with top and door faces aligned.
4. Door Edge Profile: Hinged edge square, and lock edge beveled.
5. Typical Door Face Sheets: Flush.
6. Glazed Lights: Non-removable stops on non-secure side; sizes and configurations as indicated on drawings. Style: Manufacturer's standard.
7. Hardware Preparations, Selections and Locations: Comply with NAAMM HMMA 830 and NAAMM HMMA 831 or BHMA A156.115 and ANSI/SDI A250.8 (SDI-100) in accordance with specified requirements.
8. Zinc Coating for Typical Interior and/or Exterior Locations: Provide metal components zinc-coated (galvanized) and/or zinc-iron alloy-coated (galvannealed) by the hot-dip process in accordance with ASTM A653/A653M, with manufacturer's standard coating thickness, unless noted otherwise for specific hollow metal doors and frames.
   a. Based on SDI Standards: Provide at least A40/ZF120 (galvannealed) when necessary, coating not required for typical interior door applications, and at least A60/ZF180 (galvannealed) for corrosive locations.

B. Combined Requirements: If a particular door and frame unit is indicated to comply with more than one type of requirement, comply with the specified requirements for each type; for instance, an exterior door that is also indicated as being sound-rated must comply with the requirements specified for exterior doors and for sound-rated doors; where two requirements conflict, comply with the most stringent.

2.3 DESIGN CLEARANCES

A. The clearance between the door and frame head and jambs shall be 1/8" (3.2 mm) in the case of both single swing and pairs of doors.

B. The clearance between the meeting edges of pairs of doors shall be 1/8" (3.2 mm) to 1/4" (6.3 mm), for fire rated doors 1/8" (3.2 mm) ± 1/16" (1.6 mm).

C. The clearance at the bottom shall be 3/8" (9.25 mm) above finish floor, ½" (12.7 mm) at doors with Auto Door Bottom seals.

D. The clearance between the face of the door and door stop shall be 1/16" (1.6 mm) to 1/8" (3.2 mm).

E. All clearances shall be, unless otherwise specified, subject to a tolerance of ± 1/32" (0.8 mm).

2.4 HOLLOW METAL DOORS

A. Exterior Doors: Thermally insulated.
   1. Wind resistant building components tested to the following windstorm or severe weather performance standards:
      a. ANSI A250.13
      b. ASTM E330/E1886/E1996
   2. Construction: Each wind resistant building component shall be constructed as detailed in the illustrations that follow. Doors over 3'-0" in width that have an exit device must have a horizontal steel stiffener located at centerline of device. When door height is over 7'-0" and design pressure is over 60 PSF and door has mortise lock (single door) or has an ANSI strike with bolts on inactive leaf of pair, vertical lock edge steel stiffeners must be installed.
   3. Based on SDI Standards: ANSI/SDI A250.8 (SDI-100).
      a. Level 2 - Heavy-duty.
      b. Physical Performance Level B, 500,000 cycles; in accordance with ANSI/SDI A250.4.
      c. Model 2 - Seamless.
      d. Door Face Metal Thickness: 20 gage, 0.032 inch, minimum.
      e. Zinc Coating: A60/ZF180 galvannealed coating; ASTM A653/A653M.
   4. Core Material: Manufacturers standard core material/construction and in compliance with requirements.
   5. Door Thermal Resistance: Min. R-Value of 10.
   6. Door Thickness: 1-3/4 inches, nominal.
   7. Weatherstripping: Refer to Section 087100.
   8. Door Finish: Factory primed and field finished.

B. Interior Doors, Non-Fire Rated:
   1. Based on SDI Standards: ANSI/SDI A250.8 (SDI-100).
      a. Level 2 - Heavy-duty.
      b. Physical Performance Level B, 500,000 cycles; in accordance with ANSI/SDI A250.4.
      c. Model 2 - Seamless.
      d. Door Face Metal Thickness: 20 gage, 0.032 inch, minimum.
   2. Door Core Material: Manufacturers standard core material/construction and in compliance with requirements.
   3. Door Thickness: 1-3/4 inches, nominal.
   4. Door Finish: Factory primed and field finished.

C. Fire-Rated Doors:
   1. Based on SDI Standards: ANSI/SDI A250.8 (SDI-100).
      a. Level 2 - Heavy-duty.
      b. Physical Performance Level B, 500,000 cycles; in accordance with ANSI/SDI A250.4.
      c. Model 2 - Seamless.
      d. Door Face Metal Thickness: 20 gage, 0.032 inch, minimum.
   2. Fire Rating: As indicated on Door Schedule, tested in accordance with UL 10C and NFPA 252 ("positive pressure fire tests").
      a. Temperature-Rise Rating (TRR) Across Door Thickness: In accordance with local building code and authorities having jurisdiction.
      b. Provide units listed and labeled by UL (DIR) or ITS (DIR).
      c. Attach fire rating label to each fire rated unit.

3. Core Material: Manufacturers standard core material/construction in compliance with requirements.
4. Door Thickness: 1-3/4 inches, nominal.
5. Door Finish: Factory primed and field finished.

2.5 HOLLOW METAL FRAMES

A. General:
   1. Comply with the requirements of grade specified for corresponding door, except:
      a. ANSI/SDI A250.8 (SDI-100), Level 1 Door Frames: 16 gage, 0.053 inch, minimum thickness.
      b. ANSI/SDI A250.8 (SDI-100), Level 2 and 3 Door Frames: 14 gage, 0.067 inch, minimum thickness.
      c. ANSI/SDI A250.8 (SDI-100), Level 4 Door Frames: 12 gage, 0.093 inch, minimum thickness.
      d. Frames for Wood Doors: Comply with frame requirements in accordance with ANSI/SDI A250.8 (SDI-100), Level 1, 18 gage, 0.042 inch, minimum thickness.
   2. Finish: Factory primed, for field finishing.
   3. Provide mortar guard boxes for hardware cut-outs in frames to be installed in masonry or to be grouted.
   4. Frames in Masonry Walls: Size to suit masonry coursing with head member 4 inches high to fill opening without cutting masonry units.
   5. Frames Wider than 48 Inches: Reinforce with steel channel fitted tightly into frame head, flush with top.
   6. Frames Installed Back-to-Back: Reinforce with steel channels anchored to floor and overhead structure.
   7. Door frames: unless specified as Knock-down, to be continuously fully welded, fill, grind and dress face; continuously back weld casing, stop, soffit and rabbet.

B. Comply with standards and/or custom guidelines as indicated for corresponding door in accordance with applicable door frame requirements.

C. Exterior Door Frames: Fully welded.
   1. Wind resistant building components tested to the following windstorm or severe weather performance standards:
      a. ANSI A250.13
      b. ASTM E330/E1886/E1996
   2. Frames may also be listed as fire door frames tested in accordance with UL 1 OB or UL 1 OC or ITSIWH. Frames may be fire rated up to and including three hours, except as noted where glass is installed in a frame.
   3. Galvanizing: Components hot-dipped zinc-iron alloy-coated (galvannealed) in accordance with ASTM A653/A653M, with A40/ZF120 coating.
   4. Frame Metal Thickness: 14 gage, 0.067 inch, minimum.
   5. Frame Finish: Factory primed and field finished.
   6. Weatherstripping: Separate, see Section 087100.

D. Interior Door Frames, Non-Fire-Rated: Fully welded type.
   1. Frame Metal Thickness: 16 gage, 0.053 inch, minimum.
   2. Frame Finish: Factory primed and field finished.

E. Interior Door Frames: Non-Fire Rated: Fully welded type.
   1. Frame Profile - Unequal Rabbet profile, standard with manufacturer.
      a. Series, 0.9 mm (16 gage) thick, closets, bathrooms, interior room areas.
      b. Series, 1.2 mm (14 gage) thick, with kerf for door seal/gasket for unit entry doors and fire rated frames.
   2. Finish: Factory primed, for field finishing.
      a. Frames for high humidity areas to be electro galvanized prior to pre-finishing.

F. Door Frames, Fire-Rated: Full profile/continuously welded type.
   1. Fire Rating: Same as door, labeled.
   2. Frame Metal Thickness: 16 gage, 0.053 inch, minimum.
   3. Frame Finish: Factory primed and field finished.
   4. Fire Rated Grade: Comply with frame requirements specified in ANSI A250.8 for Level 1, 16 gage
   5. Fire Rating: As indicated on Door and Frame Schedule, tested in accordance with UL 10C ("positive pressure").
      a. Provide units listed and labeled by UL.
      b. Attach fire rating label to each fire rated unit.
   6. Provide reinforcements shipped loose to project site for hardware application
   7. Casing: Provide a frame without casing retainer clips. Provide frames with nail holes and oval slots (NHOS) only.
      a. Refer to Drawings for casings.

2.6 SPECIAL FUNCTION HOLLOW METAL FRAMES

A. Frames for Wood Doors: Comply with frame requirements in accordance with corresponding door.

B. Borrowed Lites Glazing Frames: Construction and face dimensions to match door frames, and as indicated on drawings.

C. Provide mortar guard boxes for hardware cut-outs in frames to be installed in masonry or to be grouted.

D. Frames in Masonry Walls: Size to suit masonry coursing with head member 4 inches high to fill opening without cutting masonry units.

E. Frames Wider than 48 inches: Reinforce with steel channel fitted tightly into frame head, flush with top.

2.7 FINISHES

A. Primer: Rust-inhibiting, complying with ANSI/SDI A250.10, door manufacturer's standard.

2.8 ACCESSORIES

A. Door Window Frames: Door window frames with glazing securely fastened within door opening.
   1. Size: As indicated on drawings.
   2. Frame Material: 18 gauge, 0.0478 inch, galvanized steel.
   3. Metal Finish: _____ polyester powder coating.

B. Glazing: As specified in Section 08 80 00, factory installed.

C. Removable Stops: Formed sheet steel, shape as indicated on drawings, mitered or butted corners; prepared for countersink style tamper proof screws.

D. Astragals for Double Doors: Specified in Section 087100.

E. Mechanical Fasteners for Concealed Metal-to-Metal Connections: Self-drilling, self-tapping, steel with electroplated zinc finish.
   1. Manufacturers:
      a. ITW Commercial Construction North America; ITW CCNA-Buildex Teks Select Series: www.ITWBuildex.com/#sle.
      b. Or Equal.

F. Grout for Frames: Mortar grout complying with ASTM C476 with maximum slump of 4 inches as measured in accordance with ASTM C143/C143M for hand troweling in place; plaster grout and thinner pumpable grout are prohibited.

G. Silencers: Resilient rubber, fitted into drilled hole; provide three on strike side of single door, three on center mullion of pairs, and two on head of pairs without center mullions.

H. Temporary Frame Spreaders: Provide for factory- or shop-assembled frames.

2.9 FRAME ANCHORS

A. Jamb Anchors:
   1. Masonry Type: Adjustable strap-and-stirrup or T-shaped anchors to suit frame size, not less than 0.042 inch thick, with corrugated or perforated straps not less than 2 inches wide by 10 inches long; or wire anchors not less than 0.177 inch thick.
   2. Stud Wall Type: Designed to engage stud and not less than 0.042 inch thick.

B. Floor Anchors: Floor anchors to be provided at each jamb. Formed from same material as frames, not less than 0.0625 inches thick.
   1. Angle clip type, a minimum of 16 gauge, two fasteners per jamb and weld to bottom of each jamb.

C. Mortar Guards: Formed from same material as frames, not less than 0.016 inches thick.

2.10 FABRICATION

A. Fabricate hollow metal work to be rigid and free of defects, warp, or buckle. Accurately form metal to required sizes and profiles, with minimum radius for thickness of metal. Where practical, fit and assemble units in manufacturer's plant. When shipping limitations so dictate, frames for large openings are to be fabricated in sections for splicing or splining in the field by others.

B. Tolerances: Fabricate hollow metal work to tolerances indicated in ANSI/SDI A250.8.

C. Hollow Metal Doors:
   1. Exterior Doors: Provide weep-hole openings in bottom of exterior doors to permit moisture to escape.
   2. Glazed Lites: Factory cut openings in doors with applied trim or kits to fit. Factory install glazing where indicted.
   3. Astragals: Provide overlapping astragals as noted in door hardware sets in Division 08 Section "Door Hardware" on one leaf of pairs of doors where required by NFPA 80 for fire-

performance rating or where indicated. Extend minimum 3/4 inch beyond edge of door on which astragal is mounted.

4. Continuous Hinge Reinforcement: Provide welded continuous 12 gage strap for continuous hinges specified in hardware sets in Sections 08 71 00 - Door Hardware.

D. Electrical Raceways: Provide hollow metal doors to receive electrified hardware with concealed wiring harness and standardized Molex™ plug connectors on both ends to accommodate up to twelve wires. Coordinate connectors on end of the wiring harness to plug directly into the electrified hardware and the through-wire transfer hardware or wiring harness specified in hardware sets in Sections 08 71 00 - Door Hardware and 28 15 00 - Access Control Hardware Devices.. Wire nut connections are not acceptable.

E. Hollow Metal Frames:
   1. Shipping Limitations: Where frames are fabricated in sections due to shipping or handling limitations, provide alignment plates or angles at each joint, fabricated of same thickness metal as frames.
   2. Welded Frames: Weld flush face joints continuously; grind, fill, dress, and make smooth, flush, and invisible.
      a. Welded frames are to be provided with two steel spreaders temporarily attached to the bottom of both jambs to serve as a brace during shipping and handling. Spreader bars are for bracing only and are not to be used to size the frame opening.
   3. Sidelight and Transom Bar Frames: Provide closed tubular members with no visible face seams or joints, fabricated from same material as door frame. Fasten members at crossings and to jambs by butt welding.
   4. Equal Rabbet Frames: Provide frames with equal rabbet dimensions unless glazing and removable stops require wider dimensions on glass side of frame.
   5. High Frequency Hinge Reinforcement: Provide high frequency hinge reinforcements at door openings 48-inches and wider with mortise butt type hinges at top hinge locations.
   6. Continuous Hinge Reinforcement: Provide welded continuous 12 gage straps for continuous hinges specified in hardware sets in Section 08 71 00 - Door Hardware.
   7. Provide countersunk, flat- or oval-head exposed screws and bolts for exposed fasteners unless otherwise indicated for removable stops, provide security screws at exterior locations.
   8. Mortar Guards: Weld guard boxes to frame at back of hardware mortises in frames at all hinges and strike preps regardless of grouting requirements.
   9. Electrical Thru-Wiring: Provide hollow metal frames receiving electrified hardware with concealed wiring harness and standardized two-piece pin and socket connectors on one end to accommodate up to twelve wires. Coordinate connectors on end of the wiring harness to plug directly into the electric through-wire transfer hardware or wiring harness specified in hardware sets in Sections 08 71 00 - Door Hardware and 28 15 00 - Access Control Hardware Devices.
   10. Electrical Knock Out Boxes: Factory weld 18 gage electrical knock out boxes to frame for electrical hardware preps; including but not limited to, electric through wire transfer hardware, electrical raceways and wiring harnesses, door position switches, electric strikes, magnetic locks, and jamb mounted card readers as specified in hardware sets in Sections 08 71 00 - Door Hardware and 28 15 00 - Access Control Hardware Devices.
      a. Provide electrical knock out boxes with a dual 1/2-inch and 3/4-inch knockouts.

b. Conduit to be coordinated and installed in the field (Division 26) from middle hinge box and strike box to door position box.
c. Electrical knock out boxes to comply with NFPA requirements and fit electrical door hardware as specified in hardware sets in Section 08 71 00 - Door Hardware.
d. Electrical knock out boxes for continuous hinges should be located in the center of the vertical dimension on the hinge jamb.

11. Floor Anchors: Weld anchors to bottom of jambs and mullions with at least four spot welds per anchor.
12. Jamb Anchors: Provide number and spacing of anchors as follows:
    a. Masonry Type: Locate anchors not more than 18 inches from top and bottom of frame. Space anchors not more than 32 inches o.c. and as follows:
        1) Provide one anchor for every 30 inches of jamb or fraction thereof.
        2) Two anchors per jamb up to 60 inches high.
        3) Three anchors per jamb from 60 to 90 inches high.
        4) Four anchors per jamb from 90 to 120 inches high.
        5) Four anchors per jamb plus 1 additional anchor per jamb for each 24 inches or fraction thereof above 120 inches high.
    b. Stud Wall Type: Locate anchors not more than 18 inches from top and bottom of frame. Space anchors not more than 32 inches o.c. and as follows:
        1) Three anchors per jamb up to 60 inches high.
        2) Four anchors per jamb from 60 to 90 inches high.
        3) Five anchors per jamb from 90 to 96 inches high.
        4) Five anchors per jamb plus 1 additional anchor per jamb for each 24 inches or fraction thereof above 96 inches high.
        5) Two anchors per head for frames above 42 inches wide and mounted in metal stud partitions.
13. Door Silencers: Except on weatherstripped or gasketed doors, drill stops to receive door silencers. Silencers to be supplied by frame manufacturer regardless if specified in Section 087100 - Door Hardware.

F. Hardware Preparation: Factory prepare hollow metal work to receive template mortised hardware; include cutouts, reinforcement, mortising, drilling, and tapping according to the Door Hardware Schedule and templates furnished as specified in Division 08 Section 087100.
1. Locate hardware as indicated, or if not indicated, according to ANSI/SDI A250.8.
2. Reinforce doors and frames to receive non-template, mortised and surface mounted door hardware.
3. Comply with applicable requirements in ANSI/SDI A250.6 and ANSI/DHI A115 Series specifications for preparation of hollow metal work for hardware.
4. Coordinate locations of conduit and wiring boxes for electrical connections with Division 26 Sections.

PART 3 EXECUTION

3.1 EXAMINATION

A. Verify existing conditions before starting work.

B. Verify that opening sizes and tolerances are acceptable.

C. Verify that finished walls are in plane to ensure proper door alignment.

3.2 PREPARATION

A. Remove welded in shipping spreaders installed at factory. Restore exposed finish by grinding, filling, and dressing, as required to make repaired area smooth, flush, and invisible on exposed faces.

B. Prior to installation, adjust and securely brace welded hollow metal frames for squareness, alignment, twist, and plumbness.

C. Tolerances shall comply with SDI-117 "Manufacturing Tolerances Standard Steel Doors and Frames."

D. Drill and tap doors and frames to receive non-template, mortised, and surface-mounted door hardware.

E. Coat inside of frames to be installed in masonry, to be grouted or where sound deadening is specified, with bituminous coating, prior to installation.

3.3 INSTALLATION GENERAL

A. Install doors and frames in accordance with manufacturer's instructions and related requirements of specified door and frame standards or custom guidelines indicated.

B. Install fire rated units in accordance with NFPA 80.

C. Coordinate frame anchor placement with wall construction.

D. Grout frames in masonry construction, using hand trowel methods; brace frames so that pressure of grout before setting will not deform frames.

E. Install door hardware as specified in Section 087100.

F. Comply with glazing installation requirements of Section 088000.

G. Coordinate installation of electrical connections to electrical hardware items.

H. Touch up damaged factory finishes.

I. Hollow Metal Frames: Install hollow metal frames of size and profile indicated. Comply with ANSI/SDI A250.11 and NFPA 80 at fire rated openings.
   1. Set frames accurately in position, plumbed, aligned, and braced securely until permanent anchors are set. After wall construction is complete and frames properly set and secured, remove temporary braces, leaving surfaces smooth and undamaged. Shim as necessary to comply with installation tolerances.
   2. Floor Anchors: Provide floor anchors for each jamb and mullion that extends to floor, and secure with post-installed expansion anchors.
   3. Masonry Walls: Coordinate installation of frames to allow for solidly filling space between frames and masonry with mortar.
   4. Grout Requirements: Do not grout head of frames unless reinforcing has been installed in head of frame. Do not grout vertical or horizontal closed mullion members.

J. Hollow Metal Doors: Fit hollow metal doors accurately in frames, within clearances specified below. Shim as necessary.

1. Non-Fire-Rated Standard Steel Doors:
   a. Jambs and Head: 1/8 inch plus or minus 1/16 inch.
   b. Between Edges of Pairs of Doors: 1/8 inch plus or minus 1/16 inch.
   c. Between Bottom of Door and Top of Threshold: Maximum 3/8 inch.
   d. Between Bottom of Door and Top of Finish Floor (No Threshold): Maximum 3/4 inch.
2. Fire-Rated Doors: Install doors with clearances according to NFPA 80.

3.4 TOLERANCES

A. Clearances Between Door and Frame: Comply with related requirements of specified frame standards or custom guidelines indicated in accordance with SDI 117 or NAAMM HMMA 861.

B. Maximum Diagonal Distortion: 1/16 inch measured with straight edge, corner to corner.

3.5 ADJUSTING

A. Adjust for smooth and balanced door movement.

B. Adjust sound control doors so that seals are fully engaged when door is closed.

C. Test sound control doors for force to close, latch, and unlatch; adjust as necessary in compliance with requirements.

3.6 SCHEDULE

A. Refer to Door and Frame Schedule on the drawings.

END OF SECTION

SECTION 081416 - FLUSH WOOD DOORS

PART 1 GENERAL

1.1 SECTION INCLUDES

A. Flush wood doors; non-rated and acoustical.

B. Transom panels.

1.2 RELATED REQUIREMENTS

A. Section 081113 - Hollow Metal Doors and Frames.

B. Section 087100 - Door Hardware.

C. Section 088000 - Glazing.

1.3 REFERENCE STANDARDS

A. ANSI A135.4 - Basic Hardboard; 2012 (Reaffirmed 2020).

B. ANSI A208.1 - American National Standard for Particleboard; 2016.

C. ASTM C1048 - Standard Specification for Heat-Strengthened and Fully Tempered Flat Glass; 2018.

D. ASTM E413 - Classification for Rating Sound Insulation; 2016.

E. ASTM E2112 - Standard Practice for Installation of Exterior Windows, Doors and Skylights; 2019c.

F. AWI (QCP) - Quality Certification Program; Current Edition.

G. AWI/AWMAC/WI (AWS) - Architectural Woodwork Standards, 2nd Edition; 2014, with Errata (2016).

H. AWMAC/WI (NAAWS) - North American Architectural Woodwork Standards; 2021, with Errata.

I. FM (AG) - FM Approval Guide; current edition.

J. ICC (IBC) - International Building Code; Most Recent Edition Adopted by Authority Having Jurisdiction, Including All Applicable Amendments and Supplements.

K. ITS (DIR) - Directory of Listed Products; current edition.

L. NEMA LD 3 - High-Pressure Decorative Laminates; 2005.

M. NFPA 80 - Standard for Fire Doors and Other Opening Protectives; 2022.

N. NFPA 252 - Standard Methods of Fire Tests of Door Assemblies; 2022.

O. UL (BMD) - Building Materials Directory; current edition.

P. UL (DIR) - Online Certifications Directory; Current Edition.

Q. UL 10B - Standard for Fire Tests of Door Assemblies; Current Edition, Including All Revisions.

R. UL 10C - Standard for Positive Pressure Fire Tests of Door Assemblies; Current Edition, Including All Revisions.

S. UL 752 - Standard for Bullet-Resisting Equipment; Current Edition, Including All Revisions.

T. WDMA I.S. 1A - Interior Architectural Wood Flush Doors; 2013.

1.4 SUBMITTALS

A. See Section 013300 - Submittal Requirements, for submittal procedures.

B. Product Data: Indicate door core materials and construction; veneer species, type and characteristics.

C. Shop Drawings: Show doors and frames, elevations, sizes, types, swings, undercuts, beveling, blocking for hardware, factory machining, factory finishing, cutouts for glazing and other details.
   1. Provide information as required by AWI/AWMAC/WI (AWS) or AWMAC/WI (NAAWS).

D. Samples: Submit two samples of door construction, 12 by 12 inches in size cut from top corner of door.

E. Samples: Submit two samples of door veneer, 12 by 12 inches in size illustrating wood grain, stain color, and sheen.

F. Certificate: Submit labels and certificates required by quality assurance and quality control programs.

G. Test Reports: Show compliance with specified requirements for the following:
   1. Sound-retardant doors and frames; sealed panel tests are not acceptable.
   2. Certification that the fire door assembly complies with NFPA 252 and UL 10A, UL 10B and UL 10C as applicable.

H. Manufacturer's Installation Instructions: Indicate special installation instructions.

I. Manufacturer's qualification statement.

J. Installer's qualification statement.

K. Specimen warranty.

L. Warranty, executed in Owner's name.

1.5 QUALITY ASSURANCE

A. Maintain one copy of the specified door quality standard on site for review during installation and finishing.

B. Manufacturer Qualifications: Company specializing in manufacturing the products specified in this section, with not less than 10 years of documented experience.
   1. Company with at least one project within past five years with value of woodwork within at least 20 percent of cost of woodwork for this project.
   2. Accredited participant in the specified certification program prior to the commencement of fabrication and throughout the duration of the project.

C. Installer Qualifications: Company specializing in performing work of the type specified in this section, with not less than 5 years of documented experience.

D. Woodwork Quality Assurance Program:
   1. Provide labels indicating that the installed work complies with AWI/AWMAC/WI (AWS) or AWMAC/WI (NAAWS) requirements for grade or grades specified.

2. Provide designated labels on shop drawings as required by quality assurance program.
3. Provide designated labels on installed products as required by quality assurance program.
4. Submit documentation upon completion of installation that verifies this work is in compliance with specified requirements.

E. Provide a label for each fire rated and sound rated door indicating the testing agencies approval for the required rating. Do not cover or obscure the label in any way.

1.6 DELIVERY, STORAGE, AND HANDLING

A. Package, deliver and store doors in accordance with specified quality standard.

B. Accept doors on site in manufacturer's packaging, and inspect for damage.

C. Protect doors with resilient packaging sealed with heat shrunk plastic; do not store in damp or wet areas or areas where sunlight might bleach veneer; seal top and bottom edges with tinted sealer if stored more than one week, and break seal on site to permit ventilation.

1.7 WARRANTY

A. See Section 01 78 36 - Warranties and Bonds, for additional warranty requirements.

B. Manufacturer Warranty: Provide manufacturer's warranty on interior doors for 2 years. Complete forms in Owner's name and register with manufacturer.
1. Include coverage for delamination of veneer, warping beyond specified installation tolerances, defective materials, and telegraphing core construction.

C. Special Warranty
1. Include removal of the defective door, hanging, hardware installation, finishing and labeling as required.

PART 2 PRODUCTS

2.1 MANUFACTURERS

A. Wood Veneer Faced Doors:
1. Algona: www.algomahardwoods.com
2. Graham Wood Doors: www.grahamdoors.com.
3. Marshfield Door Systems, Inc: www.marshfielddoors.com.
4. VT Industries, Inc: www.vtindustries.com/#sle.
5. Or Approved Equal.

2.2 DOORS AND PANELS

A. Doors: See drawings for locations and additional requirements.
1. Quality Standard: Premium Grade, Heavy Duty performance, in accordance with AWI/AWMAC/WI (AWS), AWMAC/WI (NAAWS) or WDMA I.S. 1A.
2. Wood Veneer Faced Doors: 5-ply or 7-ply unless otherwise indicated.
a. Use minimum 1/50-inch thick for wood door face.

B. Interior Doors: 1-3/4 inches thick unless otherwise indicated; flush construction.
1. Provide solid core doors at each location.

2. Fire Rated Doors: Tested to ratings indicated on drawings in accordance with UL 10C - Positive Pressure; Underwriters Laboratories Inc (UL) or Intertek/Warnock Hersey (WHI) labeled without any visible seals when door is open.
3. Sound Retardant Doors: Specified STC ratings as indicated on drawings and calculated in accordance with ASTM E413, tested in accordance with ASTM E1408. Provide acoustical core for doors to mechanical and electrical rooms and other scheduled locations.
4. Wood veneer facing for field transparent finish as indicated on drawings.

C. Transom Panels: Same construction and finish as door; same performance rating as door.

2.3 DOOR AND PANEL CORES

A. Provide particleboard core complying to ANSI/A208.1 Grade 1-LD-2 bonded to outer stiles and rails, adding to Door Performance, for non-rated and 20 minute rated door core.

B. Vertical stiles for non-rated and 20 minute rated doors to be an overall 1 3/8 wide after factory trim, bonded to core.

C. For rail edges, non-rated and 20 minute rated, provide mill option, softwood, hardwood or engineered lumber meeting NWWDA IS1-A standards, bonded to core

D. Use six-inch top rail required for listed door closers for non-rated and 20 minute rated doors.

E. Non-Rated Solid Core and 20 Minute Rated Doors: Type staved lumber core (SLC), plies and faces as indicated.

F. Fire-Rated Doors: Mineral core type, with fire resistant composite core (FD), plies and faces as indicated above; with core blocking as required to provide adequate anchorage of hardware without through-bolting.

G. Sound-Rated Doors: Equivalent to type, with particleboard core (PC) construction as required to achieve STC rating specified; plies and faces as indicated above.

2.4 DOOR FACINGS

A. Veneer Facing for Transparent Finish: Quarter sliced, select white maple, uniform color and grain for transparent finish, veneer grade in accordance with quality standard indicated, quarter cut, with book match between leaves of veneer, running match of spliced veneer leaves assembled on door or panel face.
1. Vertical Edges: Same species as face veneer.
2. "Running Match" each pair of doors and doors in close proximity to each other.
3. "Pair Match" each pair of doors; "Set Match" pairs of doors within 10 feet of each other when doors are closed.
4. Transoms: End match to doors.

B. Facing Adhesive: Type I - waterproof.

2.5 DOOR CONSTRUCTION

A. Fabricate doors in accordance with door quality standard specified.

B. Cores Constructed with stiles and rails:
1. Provide solid blocks at lock edge for hardware reinforcement.
2. Provide solid blocking for other throughbolted hardware.

C. Where supplementary protective edge trim is required, install trim after veneer facing has been applied full-width.

D. Glazed Openings: Non-removable stops on non-secure side; sizes and configurations as indicated on drawings.

E. Factory machine doors for hardware other than surface-mounted hardware, in accordance with hardware requirements and dimensions.

F. Factory fit doors for frame opening dimensions identified on shop drawings, with edge clearances in accordance with specified quality standard.
   1. Exception: Doors to be field finished.

G. Provide edge clearances in accordance with the quality standard specified.

2.6 FINISHES - WOOD VENEER DOORS

A. Finish work in accordance with AWI/AWMAC/WI (AWS), Section 5 - Finishing for grade specified and as follows:
   1. Transparent:
      a. System - 11, Polyurethane, Catalyzed.
      b. Stain: As specified in Drawings and Material Schedule.
      c. Sheen: per approved sample.

B. Factory finish doors in accordance with approved sample.

C. Seal door top edge with transparent wood sealer to match door facing.

2.7 ACCESSORIES

A. Hollow Metal Door Frames: See Section 081113.

B. Glazing: See Section 088000.

C. Glazing Stops: Rolled steel channel shape, butted corners; prepared for countersink style tamper proof screws.

D. Astragals for Non-Rated Double Doors: Steel, T shaped, overlapping and recessed at face edge.

PART 3 EXECUTION

3.1 EXAMINATION

A. Verify existing conditions before starting work.

B. Verify that opening sizes and tolerances are acceptable.

C. Do not install doors in frame openings that are not plumb or are out-of-tolerance for size or alignment.

3.2 INSTALLATION

A. Install doors in accordance with manufacturer's instructions and specified quality standard.
   1. Install fire-rated doors in accordance with NFPA 80 requirements.

B. Factory-Finished Doors: Do not field cut or trim; if fit or clearance is not correct, replace door.

C. Field-Finished Doors: Trimming to fit is acceptable.
   1. Adjust width of non-rated doors by cutting equally on both jamb edges.
   2. Trim maximum of 1/2 inch off bottom edges unless otherwise required.
   3. Trim fire-rated doors in strict compliance with fire rating limitations.

D. To the greatest extent possible, factory (shop) prepare doors for hardware.

E. Use machine tools to cut or drill for hardware.

F. Coordinate installation of doors with installation of frames and hardware.

G. Coordinate installation of glazing.

H. Install door louvers plumb and level.

3.3 TOLERANCES

A. Comply with specified quality standard for fit and clearance tolerances.

B. Comply with specified quality standard for telegraphing, warp, and squareness.

3.4 ADJUSTING

A. Adjust doors for smooth and balanced door movement.

B. Adjust closers for full closure.

3.5 SCHEDULE

A. See Door and Frame Schedule appended to this section.

END OF SECTION

SECTION 083100 - ACCESS DOORS AND PANELS

PART 1 GENERAL

1.1 SECTION INCLUDES

A. Wall- and ceiling-mounted access units.

B. Draft-stop, partition-mounted access units.

1.2 RELATED REQUIREMENTS

1.3 REFERENCE STANDARDS

A. ADA Standards - Americans with Disabilities Act (ADA) Standards for Accessible Design; 2010.

B. FM (AG) - FM Approval Guide; current edition.

1.4 SUBMITTALS

A. See Section 013000 - Administrative Requirements for submittal procedures.

B. Product Data: Provide sizes, types, finishes, hardware, scheduled locations, and details of adjoining work.

C. Shop Drawings: Indicate exact position of each access door and/or panel unit.

D. Manufacturer's Installation Instructions: Indicate installation requirements.

E. Manufacturer's qualification statement.

F. Installer's qualification statement.

G. Project Record Documents: Record actual locations of each access unit.

1.5 QUALITY ASSURANCE

A. Manufacturer Qualifications: Company specializing in manufacturing the products specified in this section with minimum three years documented experience.

B. Installer Qualifications: Company specializing in performing work of the type specified and with at least five years documented experience.

PART 2 PRODUCTS

2.1 ACCESS DOORS AND PANELS ASSEMBLIES

A. Wall-Mounted Units with Return Air Grille:
   1. Location: As indicated on drawings.
   2. Panel Material: Aluminum extrusions with gypsum board inlay.
   3. Size: As indicated on Drawings.
   4. Door/Panel: Hinged, standard duty, with tool-operated spring or cam lock and no handle.
   5. Wall Mounting Criteria: Provide surface-mounted face frame and door surface flush with frame surface.
   6. Gypsum Board Mounting Criteria: Provide drywall bead frame with door surface flush with wall surface.

B. Wall-Mounted Units in Wet Areas:
   1. Location: As indicated on drawings.
   2. Panel Material: Steel, hot-dipped zinc, or zinc-aluminum-alloy coated.
   3. Size: ___ by ___ inches.
   4. Door/Panel: Hinged, standard duty, with tool-operated spring or cam lock and no handle.
   5. Wall Mounting Criteria: Provide surface-mounted face frame and door surface flush with frame surface.
   6. Gypsum Board Mounting Criteria: Provide drywall bead frame with door surface flush with wall surface.

C. Ceiling-Mounted Units:
   1. Location: As indicated on drawings.
   2. Panel Material: Aluminum extrusion with gypsum board inlay.
   3. Size - Lay-In Grid Ceilings: To match module of ceiling grid.
   4. Size - Other Ceilings: As indicated on Drawings.
   5. Door/Panel: Hinged, standard duty, with tool-operated spring or cam lock and no handle.

D. Draft-Stop, Partition-Mounted Units:
   1. Location: As indicated on drawings.
   2. Panel Material: Steel.
   3. Finish: Powder-coated primer.
   4. Size: 36 by 36 inches.
   5. Door/Panel: Hinged, self-latching, standard duty.
      a. Ingress Side Operation: Key-operated cylinder latch.
      b. Egress Side Operation: Manufacturer's standard release mechanism.
   6. Gasketing: Manufacturer's standard neoprene gasket.

2.2 WALL- AND CEILING-MOUNTED ACCESS UNITS

A. Manufacturers:
   1. Activar Construction Products Group, Inc. - JL Industries: www.activarcpg.com/#sle.
      a. Multipurpose Access Panel: Activar/JL Industries TM.
   2. ACUDOR Products Inc: www.acudor.com/#sle.
      a. Airtight, Watertight, Wall and Ceiling Mounted Units: ACUDOR ADWT.
      b. Ceiling-Mounted Units: ACUDOR GFRG - R.
      c. Wall- and Ceiling-Mounted Units: ACUDOR DW-5058.
   3. Best Access Doors: www.bestaccessdoors.com/#sle.

B. Wall- and Ceiling-Mounted Units: Factory-fabricated door and frame, fully assembled units with corner joints welded, filled and ground flush; square and without rack or warp; coordinate requirements with type of installation assembly being used for each unit.
   1. Style: Exposed frame with door surface flush with frame surface.
      a. Gypsum Board Mounting Criteria: Use drywall bead type frame.
   2. Door Style: Single thickness with rolled or turned in edges.
   3. Frames: 16 gauge, 0.0598 inch, minimum thickness.
   4. Door Panels to Receive Wall/Ceiling Finish: Surface recessed 5/8 inch back from wall face.
   5. Insulation: Non-combustible mineral wool or glass fiber.
   6. Steel Finish: Primed.
   7. Aluminum Finish: Natural brushed.

8. Primed and Factory Finish: Polyester powder coat; color as selected by Architect from manufacturer's standard colors.
9. Door/Panel Size: As indicated on the drawings.
10. Hardware:
    a. Hinges for Non-Fire-Rated Units: Concealed, constant force closure spring type.
    b. Handle: Handle operated cam latch.
    c. Latch/Lock: Tamperproof tool-operated cam latch.
    d. Number of Locks/Latches Required: As recommended by manufacturer for size of unit.
    e. Inside Latch Release: Mechanism that allows door/panel to be opened from inside.
    f. Gasketing: Extruded neoprene, around perimeter of door panel.

PART 3 EXECUTION

3.1 EXAMINATION

A. Verify that rough openings are correctly sized and located.

B. Begin installation only after substrates have been properly prepared, and if the responsibility of another installer, notify Architect of unsatisfactory preparation before proceeding.

3.2 PREPARATION

A. Clean surfaces thoroughly prior to proceeding with this work.

B. Prepare surfaces using methods recommended by manufacturer for applicable substrates in accordance with project conditions.

3.3 INSTALLATION

A. Install units in accordance with manufacturer's instructions.

B. Install frames plumb and level in openings, and secure units rigidly in place.

C. Position units to provide convenient access to concealed equipment when necessary.

END OF SECTION

SECTION 084313 - ALUMINUM ENTRANCES AND STOREFRONT SYSTEMS

PART 1 GENERAL

1.1 SECTION INCLUDES

A. Interior Aluminum Storefront Framing and Entrances.

B. Exterior Aluminum Storefront Framing and Entrances.

1.2 RELATED REQUIREMENTS

A. Section 051200 - Structural Steel Framing: Steel attachment members.

B. Section 055000 - Metal Fabrications: Steel attachment devices.

C. Section 079200 - Joint Sealants: Sealing joints between frames and adjacent construction.

D. Section 087100 - Door Hardware: Hardware items other than specified in this section.

E. Section 088000 - Glazing: Glass and glazing accessories.

1.3 REFERENCE STANDARDS

A. AAMA 611 - Voluntary Specification for Anodized Architectural Aluminum; 2020.

B. AAMA 501.2 - Quality Assurance and Diagnostic Water Leakage Field Check of Installed Storefronts, Curtain Walls, and Sloped Glazing Systems; 2015.

C. AAMA 609 & 610 - Cleaning and Maintenance Guide for Architecturally Finished Aluminum (Combined Document); 2015.

D. ASCE 7 - Minimum Design Loads and Associated Criteria for Buildings and Other Structures; Most Recent Edition Cited by Referring Code or Reference Standard.

E. ASTM E283 - Standard Test Method for Determining the Rate of Air Leakage Through Exterior Windows, Curtain Walls, and Doors Under Specified Pressure Differences Across the Specimen; 2004 (Reapproved 2012).

F. ASTM E330/E330M - Standard Test Method for Structural Performance of Exterior Windows, Doors, Skylights and Curtain Walls by Uniform Static Air Pressure Difference; 2014 (Reapproved 2021).

G. ASTM E331 - Standard Test Method for Water Penetration of Exterior Windows, Skylights, Doors, and Curtain Walls by Uniform Static Air Pressure Difference; 2000 (Reapproved 2016).

H. ASTM E1105 - Standard Test Method for Field Determination of Water Penetration of Installed Exterior Windows, Skylights, Doors, and Curtain Walls, by Uniform or Cyclic Static Air Pressure Difference; 2015.

1.4 SYSTEM DESCRIPTION

A. Aluminum entrances and storefront system includes self-supporting, reinforced, tubular aluminum sections, shop fabricated, factory pre-finished, related flashings, anchorage and attachment devices.

B. System layout shall be as shown on drawings including custom and non-standard configurations.

C. Door hardware and glazing are specified in other sections.

1.5 PERFORMANCE REQUIREMENTS

A. Design and size exterior components to withstand dead and live loads caused by pressure and suction of wind in accordance with IBC and requirements as shown on Structural Drawings.

B. Seismic Loads: Design and size exterior components to withstand seismic loads and sway displacement as calculated in accordance with IBC and requirements as shown on Structural Drawings.

C. Limit mullion windload deflection of L/175 with full recovery of glazing materials, when measured in accordance with ASTM E330.

D. System to accommodate, without damage to components or deterioration of seals, movement within system, movement between system and peripheral construction, dynamic loading and release of loads, deflection of structural support framing.
   1. System shall not deflect more than 1/8” at the center point, or 1/16” at the center point of a horizontal member, once deadload points have been established.

E. Thermal Performance – When tested in accordance with AAMA 1503.1 the following results should be attained: U-Maximum .63/CRF – minimum of 59.

F. Limit air leakage through assembly to 0.06 cfm/min/sq ft of wall area as measured in accordance with ANSI/ASTM E283.

G. Water Resistance: No water leakage when measured in accordance with ASTM E331 with a static test pressure of 8 PSF(383 Pa).

H. Drain water entering joints, condensation occurring in glazing channels, or migrating moisture occurring within system, to the exterior by a weep drainage network.

I. System to provide for expansion and contraction within system components caused by cycling temperatures without causing detrimental affect to system components.

J. Seismic testing shall conform to AAMA recommended static test method for evaluating performance of curtain walls and storefront wall systems due to horizontal displacements associated with seismic movements and building sway.

1.6 SUBMITTALS

A. See Section 013300 - Submittals, for submittal procedures.

B. Product Data: Provide component dimensions; describe components within assembly, anchorage and fasteners, hardware reinforcing and internal drainage details.

C. Shop Drawings:
   1. Indicate system dimensions, framed opening requirements and tolerances, anticipated deflection under load, affected related Work and expansion and contraction joint location and details.
   2. Shop drawings shall be prepared by and stamped by a Professional Engineer, registered in the State of Nevada.

D. Delegated Engineering Calculations: Engineering calculations, sealed by delegated engineering professional in the State of Nevada, for portion of work designated as delegated engineering.
   1. Test reports not acceptable substitute for calculations.
   2. Certification of conformance with structural test pressures and design pressures indicated; submit product test reports with notations as required by professional engineer.

E. Submit four (4) samples 6 inches in size illustrating pre-finished aluminum surface.

1.7 QUALITY ASSURANCE

A. Designer Qualifications: Design structural support framing components under direct supervision of a Professional Structural Engineer experienced in design of this Work and licensed in Nevada.

B. Manufacturer Qualifications: Company specializing in performing work of type specified and with at least 10 years of documented experience.

C. Installer Qualifications: Company specializing in performing work of type specified and with at least 5 years of documented experience.

D. Perform Work in accordance with AAMA SFM-1 and AAMA - Metal Curtain Wall, Window, Store Front and Entrance - Guide Specifications Manual and AAMA - Aluminum Curtain Wall Design Guide Manual.

E. Single Source Responsibility:
   1. Obtain entrances, storefronts, ribbon walls, window walls, curtain walls, window systems, and finish through one source from a single manufacturer.

1.8 DELIVERY, STORAGE, AND HANDLING

A. Handle work of this section in accordance with AAMA - Curtain Wall Manual #10.

B. Protect pre-finished aluminum surfaces with stripable coating. Do not use adhesive papers or sprayed coatings which bond when exposed to sunlight or weather.

1.9 FIELD CONDITIONS

A. Do not install sealants when ambient temperature is less than 40 degrees F. Maintain this minimum temperature during and 48 hours after installation.

1.10 WARRANTY

A. See Section 017836 - Warranties and Bonds, for additional warranty requirements.

B. Sealed Insulating Glass Units: Provide a five (5) year warranty to include coverage for seal failure, interpane dusting or misting, including replacement of failed units.

C. Special Warranty
   1. The manufacturer of the insulated glass shall warrant and guarantee direct to the Owner each insulating glass unit installed to be free from material obstructions of vision as a result of dust or film formation on the internal glass surfaces caused by failure of the hermetic seal other than glass breakage, and that spacer bars shall not "walk up" into the cavity between the glass lites, for a period of ten years.

2. The manufacturer of units with coated glass shall warrant and guarantee direct to the Owner each unit be free from discoloration, mottling or deteriorating of the coating regardless of loss of insulating glass seal, for a period of ten years.
3. The manufacturer of the laminated glass shall warrant and guarantee direct to the Owner each unit installed to be free from delamination or other defects for a period of ten years.
4. The Contractor shall guarantee glazing occurring on the building to be weather and watertight for a period of five years after date of Substantial Completion.
5. All warranties shall agree to replace the glass F.O.B. project site, including labor, at no cost to the Owner, provided the manufacturer's instructions for protection and maintenance have been adhered to during the warranty period and failure is not due to vandalism or glass breakage caused by external projectiles.

PART 2 PRODUCTS

2.1 MANUFACTURERS

A. Basis of Design: Contract Documents are based on products specified below to establish a standard of quality. Other acceptable manufacturers with products having equivalent characteristics may be considered, provided deviations are minor and design concept expressed in Contract Documents is not changed, as determined by the Architect.
   1. Arcadia, Inc., 2301 E Vernon, Vernon, CA. Telephone 323/269-7300, Fax 323/269-7390.

B. Acceptable Manufacturers: Subject to compliance with requirements of Contract Documents, provide product by one of manufacturers listed alphabetically below. If not listed, submit as substitution according to Conditions of the Contract and Division 1 Sections.
   1. U.S. Aluminum Corp.
   2. Kawneer Company, Inc.
   3. Or Approved Equal

C. Substitutions: 012500 - Product Substitutions.

2.2 SWINGING DOORS

A. Exterior Doors:
   1. Arcadia, Inc., WS512 HD Series, Heavy Duty Door 1-3/4".
      a. Vertical Stiles: 5 inches.
      b. Top Rail: 5-5/16 inches.
      c. Bottom Rail: 10/12 inches.
      d. Glazing Stops: Beveled snap-in type for 1" infill.

B. Interior Doors:
   1. Arcadia, Inc., WS512 Series, Wide Stile Door 1-3/4".
      a. Vertical Stiles: 5 inches.
      b. Top Rail: 5-1/8 inches.
      c. Bottom Rail: 10/12 inches.
      d. Glazing Stops: Square snap-in type for 1/4" infill.

C. Major portions of the door stiles a nominal .188 inches and glass stops .050 inches thick.

D. Screws, fastening devices, and internal components: Aluminum, stainless steel, or zinc plated steel in accordance with ASTM A164. Shall be aluminum or steel, providing the steel is properly isolated from aluminum.

E. Glass and Glazing: As specified in Section 08 8000 - Glazing.
   1. Glazing Gasket (compression-type design).

F. Extruded aluminum 6063-T5 alloy and temper (ASTM B221-Alloy G.S. 10a T6) with concealed reinforcement at corners.

G. Hardware: As specified in Section 08 7100 - Door Hardware.
   1. Hardware furnished and installed by the door manufacturer, and include the following standard hardware (as selected).
      a. Weatherstripping: Hard-backed poly pile in door and/or frame. Meeting stile of all pair of doors have a double line hard-backed poly-pile astragal.
      b. Threshold: Extruded Aluminum with ribbed surface.
      c. Sill Sweeps: Brush strip (exposed, concealed).
      d. Pivoting/Hinging: (Center, offset pivot; butt, continuous.)
      e. Closers: (Overhead concealed, surface, concealed floor.)
      f. Latches/Strike: (Dead-latch combination, two-point.)
      g. Latch Handle: (Lever, eurostyle/ w/return, paddle.)
      h. Electric Release: (Offset strike, center hung strike.)
      i. Locks/Strike: (Maximum security hooklock, deadbolt.)
      j. Auxiliary Locks: (Two-point, three-point, flushbolts.)
      k. Cylinders: (Mortise, rim, dummy, thumbturn.)
      l. Panic Devices: (Cross, touch bar, flush mid panel.)
      m. Push/Pulls: (Standard, offset radius, straight radius.)
      n. Cylinder Guard: (Security ring/retainer ring.)
      o. Exit Indicator: (Message panel.)
      p. Transom Decal: (This door to remain . . .)
      q. Door Stop/Holder:

H. Finishes:
   1. Class I Natural Anodized Finish: AAMA 611 AA-M12C22A41 Clear anodic coating not less than 0.7 mils thick.

I. Door Fabrication
   1. Stiles and rails shall be tubular sections accurately joined, flush and hairline at corners with heavy concealed reinforcement brackets secured with machine bolts, with optional MIG weld. Exposed screws not permitted.
   2. Each door leaf equipped with an adjusting mechanism, located in the top rail near the lock stile.
   3. Prepare internal reinforcement for door hardware.
   4. Custom hardware templates and physical hardware must be submitted prior to any fabrication.

2.3 EXTERIOR FRAMING FOR INSULATING GLAZING

A. Basis of Design:

1. Arcadia, Inc., AFG451T Series, 2” x 4-1/2” Thermally broken; offset glazed system, screw spline, shear block, compensating stick or punched opening fabrication for 1” insulated or laminated glass.

B. Framing members, transition members, mullions, adaptors, and mounting: Extruded 6063-T6 aluminum alloy (ASTM B221 – Alloy G.S. 10a T6).

C. Framing shall be 2 inch wide by 4-1/2 inch deep. Provide 4 inch frame headers where shown at exterior doors where shown on drawings.

D. Screws, fastening devices, and internal components: Aluminum, stainless steel, or zinc-plated steel in accordance with ASTM A164. Perimeter anchors shall be aluminum or steel, providing the steel is properly isolated from aluminum.

E. Provide manufacturer’s standard polyurethane structural thermal barrier within system.

F. Glass and Glazing: As shown on drawings and as specified in Section 08 8000 - Glazing.
   1. Insulated glazing system shall be designed for maximum glass thicknesses.
   2. Glazing Gasket
      a. Compression-type design, replaceable, molded or extruded, or ethylene propylene diene monomer (EPDM).
      b. Shall be of type that locks securely into the glazing reglet to prevent glazing gaskets from disengaging.

G. Design system for inside glazing with an outside set.

H. Anchors: Manufacturer's standard aluminum or stainless steel, appropriate for the substrate involved.

I. Flashing: Aluminum of configuration shown on drawings and finished to match frames.

J. Finishes:
   1. Class I Natural Anodized Finish: AAMA 611 AA-M12C22A41 Clear anodic coating not less than 0.7 mils thick.
   2. Protection of Finish: Protect exposed surfaces from damage by applying a strippable, temporary protective covering prior to shipment.
   3. Touch-Up Materials: As recommended by coating manufacturer for field application.

K. System Fabrication
   1. Continuous sub-sill shall be provided under sill members to collect water infiltration and divert from the interior of the system.
   2. Framing members shall be internally reinforced and secured at head and sill as necessary for structural performance requirements, for hardware attachment, and as indicated.
   3. Fasteners shall be so located as to ensure concealment from view in the final assembly.
   4. System shall be internally flashed with weep holes to allow continuous drainage of moisture to exterior face.
   5. Finishing: Apply factory finish to all surfaces that will be exposed in completed assemblies.
   6. Touch-up surfaces cut during fabrication so that no natural aluminum is visible in completed assemblies, including joint edges.

2.4 INTERIOR FRAMING FOR 1/4" GLAZING

A. Basis of Design:

1. Arcadia, Inc., AF450 Series, 2” x 4½” Non-Thermal; center glazed, screw spline, shear block, compensating stick or punched opening fabrication for ¼” glass.

B. Framing members, transition members, mullions, adaptors, and mounting: Extruded 6063-T6 aluminum alloy (ASTM B221 – Alloy G.S. 10a T6).Screws, fastening devices, and internal components: Aluminum, stainless steel, or zinc-plated steel in accordance with ASTM.A-164. Perimeter anchors shall be aluminum or steel, providing the steel is properly isolated from aluminum.

C. Glass and Glazing: As shown on drawings and as specified in Section 088000 - Glazing.
   1. Flush glazing stops, sized for glazing specified.
   2. Glazing Gasket
      a. Compression-type design, replaceable, molded or extruded, or ethylene propylene diene monomer (EPDM).
      b. Shall be of type that locks securely into the glazing reglet to prevent glazing gaskets from disengaging.

D. Anchors: Manufacturer's standard aluminum or stainless steel, appropriate for the substrate involved.

E. Finishes:
   1. Class I Natural Anodized Finish: AAMA 611 AA-M12C22A41 Clear anodic coating not less than 0.7 mils thick.
   2. Protection of Finish: Protect exposed surfaces from damage by applying a strippable, temporary protective covering prior to shipment.
   3. Touch-Up Materials: As recommended by coating manufacturer for field application.

2.5 SEALANT MATERIALS

A. Sealant and Backing Materials: As specified in Section 07 9200 - Joint Sealants.

PART 3 EXECUTION

3.1 EXAMINATION

A. Verify dimensions, tolerances, and method of attachment with other work.

B. Verify wall openings and adjoining air and vapor seal materials are ready to receive work of this Section.

3.2 INSTALLATION

A. Install systems in accordance with manufacturer's instructions and AAMA - Metal Curtain Wall, Window, Store Front and Entrance - Guide Specifications Manual.

B. Attach to structure to permit adjustment to accommodate construction tolerances and other irregularities.

C. Provide alignment attachments and shims to permanently fasten system to building structure.

D. Prevent galvanic action and other forms of corrosion by isolating metals from direct contact with incompatible surfaces.

E. Align assembly plumb and level, free of warp or twist. Maintain assembly dimensional tolerances and alignment with adjacent work.

F. Provide thermal isolation where components penetrate or disrupt building insulation.

G. Pack fibrous insulation in shim spaces at perimeter of assembly to maintain continuity of thermal barrier.

H. Install hardware in accordance with manufacturer's instructions using templates provided.

I. Install glazing in accordance with Section 08 8000 - Glazing using glazing method required to achieve performance criteria.
   1. No “smash glazing” practices are allowed. All field-glazed applications shall be able to be caulked after the glass is set, no exceptions.

J. Install perimeter sealant in accordance with Section 07 9200 - Joint Sealants.

3.3 FIELD QUALITY CONTROL

A. See Section 01 4000 - Quality Requirements, for independent testing and inspection requirements. Inspection will monitor quality of installation and glazing.

B. Pre-Testing Conference: Before beginning testing and inspections, conduct conference at Project to comply with requirements of appropriate Division 01 Sections.

C. Field Testing and Inspections: Owner will engage a qualified independent testing agency to perform field quality control testing and inspections to determine if installed work complies with specified requirements. Contractor to provide powered scaffold, hose, water supply, communication system and manpower to perform tests.
   1. Required Attendees:
      a. Owner.
      b. Architect.
      c. All Exterior Finish Consultants, including supervisors.
      d. General Contractor, including supervisor.
      e. Installers of adjacent work, including supervisors.
      f. Testing agency personnel, including supervisors.
      g. Storefront Manufacturer’s technical representative.
   2. Minimum Agenda:
      a. Tour areas representative of assemblies to be tested, discuss and evaluate for compliance with Contract Documents.
      b. Review specified inspection and testing.
      c. Review forecasted weather conditions and procedures for coping with unfavorable conditions.
   3. Reports: Record discussions and decisions, prepare and certify report, and distribute.

D. Air Infiltration Test:
   1. Method: ASTM E783.
   2. Locations: At locations determined by Architect.
   3. Size: Minimum of one structural bay wide by one story tall, including a stack joint or splice at curtain wall areas.
   4. Frequency:
      a. Test 1: At initial installation.

b. Test 2: 50 percent completion.
c. Test 3: 80 percent completion.

5. Procedure: Test at 1.5 times rate specified under PART 1, but not more than 0.09 cfm/sf (0.03 L/s per sq m) at each location.

E. Water Spray Test:
1. Method: AAMA 501.2. or modified ASTM E1105 (only when not subjected to an artificial pressure differential)
2. Locations: At locations determined by Architect.
3. Size: Minimum of one structural bay wide by one story tall, including a stack joint or splice at curtain wall areas.
4. Frequency:
a. Test 1: At initial installation.
b. Test 2: 10 percent completion.
c. Test 3: 25 percent completion.
d. Test 3: 45 percent completion.
e. Test 3: 65 percent completion.
f. Test 3: 90 percent completion.
5. Procedure: Test at rate specified under PART 1 for 15 minutes at each location.
6. Reports: Record testing and inspection results and prepare certified reports according to ASTM E575 format.

F. Re-testing and Re-inspections Due to Failures: Contractor is responsible for expenses incurred, without additional cost to Owner, due to failure of work to pass testing and inspections.

G. Weepage System: Mask weeps and introduce water to interior areas to demonstrate weepage performance.
1. Fill gutters to average ¾ inch height and hold for 30 minutes.
2. No leakage to interior spaces is allowed.

3.4 TOLERANCES: CONFORM TO FOLLOWING NON-CUMULATIVE TOLERANCES:

A. Maximum Variation from Plumb: 0.06 inches every 3 ft non-cumulative or 1/16 inches per 10 ft, whichever is less.
1. Variation for Vertical Members:
a. Not more than 1/8 inch in 26 ft.
b. Not more than 1/4 inch in 52 ft.
2. Variation for Horizontal Members: Not more than 1/8 inch in 25 ft in any direction.

B. Maximum Misalignment of Two Adjoining Members Abutting in Plane: 1/32 inch.

C. Offset from Alignment of Members End to End: Not more than 1/32 inch

D. Gap Between Removable Members: Not more than 1/16 inch, or not more than 1/32 inch at each end of single member.

E. Variation in Plane: One of following:
1. Not more than 1/16 inch in 10 ft at any location.
2. Not more than 1/8 inch over entire face or area.

F. Sealant joint width between Mullions and adjacent construction: minimum of 1/4 inch.

3.5 ADJUSTING

A. Adjust operating hardware for smooth operation.

3.6 CLEANING

A. Remove protective material from pre-finished aluminum surfaces.

B. Wash down surfaces with a solution of mild detergent in warm water, applied with soft, clean wiping cloths. Take care to remove dirt from corners. Wipe surfaces clean.

3.7 PROTECTION OF FINISHED WORK

A. Protect finished Work from damage with padding or rigid board.

END OF SECTION

SECTION 084413 - GLAZED ALUMINUM CURTAIN WALLS

PART 2 PRODUCTS

1.1 CURTAIN WALL

A. Aluminum-Framed Curtain Wall: Factory fabricated, factory finished aluminum framing members with infill, and related flashings, anchorage and attachment devices.
   1. Finish: Class I natural anodized.
      a. Factory finish surfaces that will be exposed in completed assemblies.
      b. Coat concealed metal surfaces that will be in contact with cementitious materials or dissimilar metals with bituminous paint.
   2. Provide flush joints and corners, weathersealed, accurately fitted and secured; prepared to receive anchors; fasteners and attachments concealed from view; reinforced as required for imposed loads.
   3. Construction: Eliminate noises caused by wind and thermal movement, prevent vibration harmonics, and prevent "stack effect" in internal spaces.
   4. System Internal Drainage: Drain to the exterior by means of a weep drainage network any water entering joints, condensation occurring in glazing channel, and migrating moisture occurring within system.

B. Structural Performance Requirements: Design and size components to withstand the following load requirements without damage or permanent set.
   1. Design Wind Loads: Comply with the following:
      a. Positive Design Wind Load: ____ lbf/sq ft.
      b. Negative Design Wind Load: ____ lbf/sq ft.
      c. Measure performance by testing in accordance with ASTM E330/E330M, using test loads equal to 1.5 times the design wind loads and 10 second duration of maximum pressure.
   2. Movement: Accommodate the following movement without damage to components or deterioration of seals:
      a. Expansion and contraction caused by 180 degrees F surface temperature.
      b. Expansion and contraction caused by cycling temperature range of 170 degrees F over a 12 hour period.
      c. Movement of curtain wall relative to perimeter framing.
      d. Deflection of structural support framing, under permanent and dynamic loads.

C. Water Penetration Resistance on Manufactured Assembly: No uncontrolled water on indoor face when tested as follows:
   1. Test Pressure Differential: 10 psf.

D. Air Leakage: 0.06 cfm/sq ft maximum leakage of wall area when tested in accordance with ASTM E283/E283M at 6.27 psf pressure difference across assembly.

1.2 COMPONENTS

A. Aluminum Framing Members: Tubular aluminum sections, thermally broken with interior section insulated from exterior, drainage holes and internal weep drainage system.

B. Glazing: See Section 088000.

END OF SECTION

SECTION 087100 - DOOR HARDWARE

GENERAL

1.1 SUMMARY

A. Section includes:
   1. Mechanical and electrified door hardware
      a. Electronic access control system components
   2. Section excludes:
      a. Windows
      b. Cabinets (casework), including locks in cabinets
      c. Signage
      d. Toilet accessories
      e. Overhead doors

1.2 RELATED SECTIONS:

A. Division 01 Section ''Alternates'' for alternates affecting this section.

B. Division 06 Section ''Rough Carpentry''

C. Division 06 Section ''Finish Carpentry''

D. Division 07 Section ''Joint Sealants'' for sealant requirements applicable to threshold installation specified in this section.

E. Division 08 Sections:
   1. ''Hollow Metal Doors and Frames''
   2. ''Flush Wood Doors''
   3. ''Aluminum-Framed Entrances and Storefronts''

F. Division 26 ''Electrical'' sections for connections to electrical power system and for low-voltage wiring.

G. Division 28 ''Electronic Safety and Security'' sections for coordination with other components of electronic access control system and fire alarm system.

1.3 REFERENCES

A. UL LLC
   1. UL 10B - Fire Test of Door Assemblies
   2. UL 10C - Positive Pressure Test of Fire Door Assemblies
   3. UL 1784 - Air Leakage Tests of Door Assemblies
   4. UL 305 - Panic Hardware

B. DHI - Door and Hardware Institute
   1. Sequence and Format for the Hardware Schedule
   2. Recommended Locations for Builders Hardware
   3. Keying Systems and Nomenclature
   4. Installation Guide for Doors and Hardware

C. NFPA – National Fire Protection Association
   1. NFPA 70 – National Electric Code

2. NFPA 80 – 2016 Edition – Standard for Fire Doors and Other Opening Protectives
3. NFPA 101 – Life Safety Code
4. NFPA 105 – Smoke and Draft Control Door Assemblies
5. NFPA 252 – Fire Tests of Door Assemblies

D. ANSI - American National Standards Institute
1. ANSI A117.1 – 2017 Edition – Accessible and Usable Buildings and Facilities
2. ANSI/BHMA A156.1 - A156.29, and ANSI/BHMA A156.31 - Standards for Hardware and Specialties
3. ANSI/BHMA A156.28 - Recommended Practices for Keying Systems
4. ANSI/WDMA I.S. 1A - Interior Architectural Wood Flush Doors
5. ANSI/SDI A250.8 - Standard Steel Doors and Frames

1.4 SUBMITTALS

A. General:
1. Submit in accordance with Conditions of Contract and Division 01 Submittal Procedures.
2. Prior to forwarding submittal:
a. Review drawings and Sections from related trades to verify compatibility with specified hardware.
b. Highlight, encircle, or otherwise specifically identify on submittals: deviations from Contract Documents, issues of incompatibility or other issues which may detrimentally affect the Work.

B. Action Submittals:
1. Product Data: Submit technical product data for each item of door hardware, installation instructions, maintenance of operating parts and finish, and other information necessary to show compliance with requirements.
2. Riser and Wiring Diagrams: After final approval of hardware schedule, submit details of electrified door hardware, indicating:
a. Wiring Diagrams: For power, signal, and control wiring and including:
1) Details of interface of electrified door hardware and building safety and security systems.
2) Schematic diagram of systems that interface with electrified door hardware.
3) Point-to-point wiring.
4) Risers.
3. Samples for Verification: If requested by Architect, submit production sample of requested door hardware unit in finish indicated and tagged with full description for coordination with schedule.
a. Samples will be returned to supplier. Units that are acceptable to Architect may, after final check of operations, be incorporated into Work, within limitations of key coordination requirements.
4. Door Hardware Schedule:
a. Submit concurrent with submissions of Product Data, Samples, and Shop Drawings. Coordinate submission of door hardware schedule with scheduling requirements of other work to facilitate fabrication of other work critical in Project construction schedule.
b. Submit under direct supervision of a Door Hardware Institute (DHI) certified Architectural Hardware Consultant (AHC) or Door Hardware Consultant (DHC) with hardware sets in

vertical format as illustrated by Sequence of Format for the Hardware Schedule published by DHI.

c. Indicate complete designations of each item required for each opening, include:
   1) Door Index: door number, heading number, and Architect's hardware set number.
   2) Quantity, type, style, function, size, and finish of each hardware item.
   3) Name and manufacturer of each item.
   4) Fastenings and other pertinent information.
   5) Location of each hardware set cross-referenced to indications on Drawings.
   6) Explanation of all abbreviations, symbols, and codes contained in schedule.
   7) Mounting locations for hardware.
   8) Door and frame sizes and materials.
   9) Degree of door swing and handing.
   10) Operational Description of openings with electrified hardware covering egress, ingress (access), and fire/smoke alarm connections.

5. Key Schedule:
   a. After Keying Conference, provide keying schedule that includes levels of keying, explanations of key system's function, key symbols used, and door numbers controlled.
   b. Use ANSI/BHMA A156.28 ''Recommended Practices for Keying Systems'' as guideline for nomenclature, definitions, and approach for selecting optimal keying system.
   c. Provide 3 copies of keying schedule for review prepared and detailed in accordance with referenced DHI publication. Include schematic keying diagram and index each key to unique door designations.
   d. Index keying schedule by door number, keyset, hardware heading number, cross keying instructions, and special key stamping instructions.
   e. Provide one complete bitting list of key cuts and one key system schematic illustrating system usage and expansion. Forward bitting list, key cuts and key system schematic directly to Owner, by means as directed by Owner.
   f. Prepare key schedule by or under supervision of supplier, detailing Owner's final keying instructions for locks.

C. Informational Submittals:
   1. Provide Qualification Data for Supplier, Installer and Architectural Hardware Consultant.
   2. Provide Product Data:
      a. Certify that door hardware approved for use on types and sizes of labeled fire-rated doors complies with listed fire-rated door assemblies.
      b. Include warranties for specified door hardware.

D. Closeout Submittals:
   1. Operations and Maintenance Data: Provide in accordance with Division 01 and include:
      a. Complete information on care, maintenance, and adjustment; data on repair and replacement parts, and information on preservation of finishes.
      b. Catalog pages for each product.
      c. Final approved hardware schedule edited to reflect conditions as installed.
      d. Final keying schedule
      e. Copy of warranties including appropriate reference numbers for manufacturers to identify project.
      f. As-installed wiring diagrams for each opening connected to power, both low voltage and 110 volts.

E. Inspection and Testing:
   1. Submit written reports to the Owner and Authority Having Jurisdiction (AHJ) of the results of functional testing and inspection for:
      a. Fire door assemblies, in compliance with NFPA 80.
      b. Required egress door assemblies, in compliance with NFPA 101.

1.5 QUALITY ASSURANCE

A. Qualifications and Responsibilities:
   1. Supplier: Recognized architectural hardware supplier with a minimum of 5 years documented experience supplying both mechanical and electromechanical door hardware similar in quantity, type, and quality to that indicated for this Project. Supplier to be recognized as a factory direct distributor by the manufacturer of the primary materials with a warehousing facility in the Project's vicinity. Supplier to have on staff, a certified Architectural Hardware Consultant (AHC) or Door Hardware Consultant (DHC) available to Owner, Architect, and Contractor, at reasonable times during the Work for consultation.
   2. Installer: Qualified tradesperson skilled in the application of commercial grade hardware with experience installing door hardware similar in quantity, type, and quality as indicated for this Project.
   3. Architectural Hardware Consultant: Person who is experienced in providing consulting services for door hardware installations that are comparable in material, design, and extent to that indicated for this Project and meets these requirements:
      a. For door hardware: DHI certified AHC or DHC.
      b. Can provide installation and technical data to Architect and other related subcontractors.
      c. Can inspect and verify components are in working order upon completion of installation.
      d. Capable of producing wiring diagram and coordinating installation of electrified hardware with Architect and electrical engineers.
   4. Single Source Responsibility: Obtain each type of door hardware from single manufacturer.

B. Certifications:
   1. Fire-Rated Door Openings:
      a. Provide door hardware for fire-rated openings that complies with NFPA 80 and requirements of authorities having jurisdiction.
      b. Provide only items of door hardware that are listed products tested by UL LLC, Intertek Testing Services, or other testing and inspecting organizations acceptable to authorities having jurisdiction for use on types and sizes of doors indicated, based on testing at positive pressure and according to NFPA 252 or UL 10C and in compliance with requirements of fire-rated door and door frame labels.
   2. Smoke and Draft Control Door Assemblies:
      a. Provide door hardware that meets requirements of assemblies tested according to UL 1784 and installed in compliance with NFPA 105
      b. Comply with the maximum air leakage of 0.3 cfm/sq. ft. (3 cu. m per minute/sq. m) at tested pressure differential of 0.3-inch wg (75 Pa) of water.
   3. Electrified Door Hardware
      a. Listed and labeled as defined in NFPA 70, Article 100, by testing agency acceptable to authorities having jurisdiction.
   4. Accessibility Requirements:

a. Comply with governing accessibility regulations cited in ''REFERENCES'' article 087100, 1.02.D3 herein for door hardware on doors in an accessible route. This project must comply with all Federal Americans with Disability Act regulations and all Local Accessibility Regulations.

C. Pre-Installation Meetings
1. Keying Conference
a. Incorporate keying conference decisions into final keying schedule after reviewing door hardware keying system including:
1) Function of building, flow of traffic, purpose of each area, degree of security required, and plans for future expansion.
2) Preliminary key system schematic diagram.
3) Requirements for key control system.
4) Requirements for access control.
5) Address for delivery of keys.
2. Pre-installation Conference
a. Review and finalize construction schedule and verify availability of materials, Installer's personnel, equipment, and facilities needed to make progress and avoid delays.
b. Inspect and discuss preparatory work performed by other trades.
c. Inspect and discuss electrical roughing-in for electrified door hardware.
d. Review sequence of operation for each type of electrified door hardware.
e. Review required testing, inspecting, and certifying procedures.
f. Review questions or concerns related to proper installation and adjustment of door hardware.
3. Electrified Hardware Coordination Conference:
a. Prior to ordering electrified hardware, schedule and hold meeting to coordinate door hardware with security, electrical, doors and frames, and other related suppliers.

1.6 DELIVERY, STORAGE, AND HANDLING

A. Inventory door hardware on receipt and provide secure lock-up for hardware delivered to Project site. Promptly replace products damaged during shipping.

B. Tag each item or package separately with identification coordinated with final door hardware schedule, and include installation instructions, templates, and necessary fasteners with each item or package. Deliver each article of hardware in manufacturer's original packaging.

C. Maintain manufacturer-recommended environmental conditions throughout storage and installation periods.

D. Provide secure lock-up for door hardware delivered to Project. Control handling and installation of hardware items so that completion of Work will not be delayed by hardware losses both before and after installation.

E. Handle hardware in manner to avoid damage, marring, or scratching. Correct, replace or repair products damaged during Work. Protect products against malfunction due to paint, solvent, cleanser, or any chemical agent.

F. Deliver keys to manufacturer of key control system for subsequent delivery to Owner.

1.7 COORDINATION

A. Coordinate layout and installation of floor-recessed door hardware with floor construction. Cast anchoring inserts into concrete.

B. Installation Templates: Distribute for doors, frames, and other work specified to be factory or shop prepared. Check Shop Drawings of other work to confirm that adequate provisions are made for locating and installing door hardware to comply with indicated requirements.

C. Security: Coordinate installation of door hardware, keying, and access control with Owner's security consultant.

D. Electrical System Roughing-In: Coordinate layout and installation of electrified door hardware with connections to power supplies and building safety and security systems.

1.8 WARRANTY

A. Manufacturer's standard form in which manufacturer agrees to repair or replace components of door hardware that fail in materials or workmanship within published warranty period.
   1. Warranty does not cover damage or faulty operation due to improper installation, improper use or abuse.
   2. Warranty Period: Beginning from date of Substantial Completion, for durations indicated in manufacturer's published listings.
      a. Mechanical Warranty
         1) Locks
            a) Falcon: 10 years
         2) Exit Devices
            a) Falcon: 10 years
         3) Closers
            a) Falcon SC Series: 10 years

1.9 MAINTENANCE

A. Furnish complete set of special tools required for maintenance and adjustment of hardware, including changing of cylinders.

B. Turn over unused materials to Owner for maintenance purposes.

PART 2 PRODUCTS

2.1 MANUFACTURERS

A. The Owner requires use of certain products for their unique characteristics and project suitability to ensure continuity of existing and future performance and maintenance standards. After investigating available product offerings, the Awarding Authority has elected to prepare proprietary specifications. These products are specified with the notation: ''No Substitute.''
   1. Where ''No Substitute'' is noted, submittals and substitution requests for other products will not be considered.

B. Where specified hardware is not adaptable to finished shape or size of members requiring hardware, furnish suitable types having same operation and quality as type specified, subject to Architect's approval.

2.2 MATERIALS

A. Fabrication
   1. Provide door hardware manufactured to comply with published templates generally prepared for machine, wood, and sheet metal screws. provide screws according to manufacturer's recognized installation standards for application intended.
   2. Finish exposed screws to match hardware finish, or, if exposed in surfaces of other work, to match finish of this other work including prepared for paint surfaces to receive painted finish.
   3. Provide concealed fasteners wherever possible for hardware units exposed when door is closed. Coordinate with "Metal Doors and Frames", "Flush Wood Doors", "Stile and Rail Wood Doors" to ensure proper reinforcements. Advise the Architect where visible fasteners, such as thru bolts, are required.

B. Provide screws, bolts, expansion shields, drop plates and other devices necessary for hardware installation.
   1. Where fasteners are exposed to view: Finish to match adjacent door hardware material.

C. Cable and Connectors:
   1. Where scheduled in the hardware sets, provide each item of electrified hardware and wire harnesses with number and gage of wires enough to accommodate electric function of specified hardware.
   2. Provide Molex connectors that plug directly into connectors from harnesses, electric locking and power transfer devices.
   3. Provide through-door wire harness for each electrified locking device installed in a door and wire harness for each electrified hinge, electrified continuous hinge, electrified pivot, and electric power transfer for connection to power supplies.

2.3 HINGES

A. Manufacturers and Products:
   1. Scheduled Manufacturer and Product:
      a. Ives 5BB series
   2. Acceptable Manufacturers:
      a. No Substitute

B. Requirements:
   1. Provide hinges conforming to ANSI/BHMA A156.1.
   2. Provide five knuckle, ball bearing hinges.
   3. 1-3/4 inch (44 mm) thick doors, up to and including 36 inches (914 mm) wide:
      a. Exterior: Standard weight, bronze or stainless steel, 4-1/2 inches (114 mm) high
      b. Interior: Standard weight, steel, 4-1/2 inches (114 mm) high
   4. 1-3/4 inch (44 mm) thick doors over 36 inches (914 mm) wide:
      a. Exterior: Heavy weight, bronze/stainless steel, 5 inches (127 mm) high
      b. Interior: Heavy weight, steel, 5 inches (127 mm) high
   5. Adjust hinge width for door, frame, and wall conditions to allow proper degree of opening.
   6. Provide three hinges per door leaf for doors 90 inches (2286 mm) or less in height, and one additional hinge for each 30 inches (762 mm) of additional door height.
   7. Hinge Pins: Except as otherwise indicated, provide hinge pins as follows:
      a. Steel Hinges: Steel pins

b. Non-Ferrous Hinges: Stainless steel pins
c. Out-Swinging Exterior Doors: Non-removable pins
d. Out-Swinging Interior Lockable Doors: Non-removable pins

2.4 CONTINUOUS HINGES

A. Manufacturers:
1. Scheduled Manufacturer:
a. Ives
2. Acceptable Manufacturers:
a. No Substitute

B. Requirements:
1. Provide aluminum geared continuous hinges conforming to ANSI/BHMA A156.26, Grade 1.
2. Provide aluminum geared continuous hinges, where specified in the hardware sets, fabricated from 6063-T6 aluminum.
3. Provide split nylon bearings at each hinge knuckle for quiet, smooth, self-lubricating operation.
4. Provide hinges capable of supporting door weights up to 450 pounds, and successfully tested for 1,500,000 cycles.
5. On fire-rated doors, provide aluminum geared continuous hinges classified for use on rated doors by testing agency acceptable to authority having jurisdiction.
6. Provide aluminum geared continuous hinges with electrified option scheduled in the hardware sets. Provide with number and gage of wires enough to accommodate electric function of specified hardware.
7. Provide hinges 1 inch (25 mm) shorter in length than nominal height of door, unless otherwise noted or door details require shorter length and with symmetrical hole pattern.

2.5 FLUSH BOLTS

A. Manufacturers:
1. Scheduled Manufacturer:
a. Ives
2. Acceptable Manufacturers:
a. No Substitute

B. Requirements:
1. Provide automatic, constant latching, and manual flush bolts with forged bronze or stainless-steel face plates, extruded brass levers, and with wrought brass guides and strikes. Provide 12 inch (305 mm) steel or brass rods at doors up to 90 inches (2286 mm) in height. For doors over 90 inches (2286 mm) in height increase top rods by 6 inches (152 mm) for each additional 6 inches (152 mm) of door height. Provide dust-proof strikes at each bottom flush bolt.

2.6 SURFACE BOLTS

A. Manufacturers:
1. Scheduled Manufacturer:
a. Ives
2. Acceptable Manufacturers:
a. No Substitute

B. Requirements:
   1. Surface bolt s to have 1'' throw for maximum security with concealed mounting that prevents vandalism. Units to be constructed of heavy-duty steel and UL listed up to three (3) hours when used on the inactive door of a pair up to 8' in height.

2.7 COORDINATORS

A. Manufacturers:
   1. Scheduled Manufacturer:
      a. Ives
   2. Acceptable Manufacturers:
      a. No Substitute

B. Requirements:
   1. Where pairs of doors are equipped with automatic flush bolts, an astragal, or other hardware that requires synchronized closing of the doors, provide bar-type coordinating device, surface applied to underside of stop at frame head.
   2. Provide filler bar of correct length for unit to span entire width of opening, and appropriate brackets for parallel arm door closers, surface vertical rod exit device strikes, or other stop mounted hardware. Factory-prepared coordinators for vertical rod devices as specified.

2.8 MORTISE LOCKS

A. Manufacturers and Products:
   1. Scheduled Manufacturer and Product:
      a. Falcon MA series
   2. Acceptable Manufacturers:
      a. No Substitute

B. Requirements:
   1. Provide mortise locks conforming to ANSI/BHMA A156.13 Series 1000, Grade 1, and UL Listed for 3-hour fire doors.
   2. Provide locks manufactured from heavy gauge steel, containing components of steel with a zinc dichromate plating for corrosion resistance.
   3. Provide lock case that is multi-function and field reversible for handing without opening case. Cylinders: Refer to ''KEYING'' article, herein.
   4. Provide locks with standard 2-3/4 inches (70 mm) backset with full 3/4 inch (19 mm) throw stainless steel mechanical anti-friction latchbolt. Provide deadbolt with full 1-inch (25 mm) throw, constructed of stainless steel.
   5. Provide standard ASA strikes unless extended lip strikes are necessary to protect trim.
   6. Lever Trim: Solid brass, bronze, or stainless steel, cast or forged in design specified, with wrought roses and external lever spring cages. Provide thru-bolted levers with 2-piece spindles.
      a. Lever Design: DANE

2.9 CYLINDRICAL LOCKS – GRADE 1

A. Manufacturers and Products:
   1. Scheduled Manufacturer and Product:
      a. Falcon T series
   2. Acceptable Manufacturers:

a. No Substitute

B. Requirements:
1. Provide cylindrical locks conforming to ANSI/BHMA A156.2 Series 4000, Grade 1, and UL Listed for 3-hour fire doors.
2. Cylinders: Refer to ''KEYING'' article, herein.
3. Provide locks with standard 2-3/4 inches (70 mm) backset, unless noted otherwise, with 1/2-inch latch throw. Provide proper latch throw for UL listing at pairs.
4. Provide locksets with separate anti-rotation thru-bolts, and no exposed screws.
5. Provide independently operating levers with two external return spring cassettes mounted under roses to prevent lever sag.
6. Provide standard ASA strikes unless extended lip strikes are necessary to protect trim.
7. Lever Trim: Solid cast levers without plastic inserts and wrought roses on both sides.
a. Lever Design: DANE

2.10 DEADBOLTS

A. Manufacturers and Products:
1. Scheduled Manufacturer and Product:
a. Falcon D100 Series
2. Acceptable Manufacturers:
a. No Substitute

B. Requirements:
1. Provide grade 1 deadbolt series conforming to ANSI/BHMA A156.
2. Cylinders: Refer to ''KEYING'' article, herein.
3. Provide deadbolts with standard 2-3/4 inches (70 mm) backset. Provide 2-3/8 inches (60 mm) where noted or if door or frame detail requires. Provide deadbolt with full 1-inch (25 mm) throw, constructed of steel alloy.
4. Provide manufacturer's standard strike.

2.11 EXIT DEVICES

A. Manufacturers and Products:
1. Scheduled Manufacturer and Product:
a. Falcon 25 series
2. Acceptable Manufacturers:
a. No Substitute

B. Requirements:
1. Provide exit devices tested to ANSI/BHMA A156.3 Grade 1 and UL listed for Panic Exit or Fire Exit Hardware.
2. Cylinders: Refer to ''KEYING'' article, herein.
3. Provide touchpad type exit devices, fabricated of brass, bronze, stainless steel, or aluminum, plated to standard architectural finishes to match balance of door hardware.
4. Touchpad must extend a minimum of one half of door width. No plastic inserts are allowed in touchpads.
5. Provide exit devices with deadlatching feature for security and for future addition of alarm kits and/or other electrified requirements.
6. Provide flush end caps for exit devices.
7. Provide exit devices with manufacturer's approved strikes.

8. Provide exit devices cut to door width and height. Install exit devices at height recommended by exit device manufacturer, allowable by governing building codes, and approved by Architect.
9. Mount mechanism case flush on face of doors or provide spacers to fill gaps behind devices. Where glass trim or molding projects off face of door, provide glass bead kits.
10. Provide cylinder or hex-key dogging as specified at non fire-rated openings.
11. Removable Mullions: 2 inches (51 mm) x 3 inches (76 mm) steel tube. Where scheduled as keyed removable mullion, provide type that can be removed by use of a keyed cylinder, which is self-locking when re-installed.
12. Provide factory drilled weep holes for exit devices used in full exterior application, highly corrosive areas, and where noted in hardware sets.
13. Provide exit devices with optional trim designs to match other lever and pull designs used on the project.

2.12 ACCESS CONTROL READER

A. Manufacturers and Products:
   1. Scheduled Manufacturer and Product:
      a. Schlage MTB Series

B. Requirements:
   1. Provide access control card readers manufactured by a global company who is a recognized leader in the production of access control devices. Card reader manufactured for non-access control applications are not acceptable.
   2. Provide multi-technology contactless readers complying with ISO 14443.
   3. Provide access control card readers capable of reading the following technologies:
      a. CSN - DESFire® CSN, HID iCLASS® CSN, Inside Contactless PicoTag® CSN, ST Microelectronics® CSN, Texas Instruments Tag-It®, CSN, Phillips I-Code® CSN
      b. 125 KHz proximity - Schlage® Proximity, HID® Proximity, GE/CASI® Proximity, AWID® Proximity, LenelProx®
      c. 13.56 MHz Smart card - Schlage smart cards using MIFARE Classic® EV1/EV3, Schlage smart cards using MIFARE Plus®, Schlage smart cards using MIFARE® DESFire® EV1/EV3, Schlage smart cards using MIFARE® DESFire® EV2/EV3
      d. 13.56 MHz NFC (mobile), 2.45 GHz Bluetooth (mobile) - Mobile means compatible with Bluetooth and NFC-enabled smartphones.

2.13 ELECTRIC STRIKES

A. Manufacturers and Products:
   1. Scheduled Manufacturer and Product:
      a. Von Duprin 6000 Series
   2. Acceptable Manufacturers:
      a. No Substitute

B. Requirements:
   1. Provide electric strikes designed for use with type of locks shown at each opening.
   2. Provide electric strikes UL Listed as burglary resistant that are tested to a minimum endurance test of 1,000,000 cycles.
   3. Where required, provide electric strikes UL Listed for fire doors and frames.

4. Provide transformers and rectifiers for each strike as required. Verify voltage with electrical contractor.

2.14 POWER SUPPLIES

A. Manufacturers and Products:
   1. Scheduled Manufacturer and Product:
      a. Schlage/Von Duprin PS900 Series
   2. Acceptable Manufacturers:
      a. No Substitute

B. Requirements:
   1. Provide power supplies approved by manufacturer of supplied electrified hardware.
   2. Provide appropriate quantity of power supplies necessary for proper operation of electrified locking components as recommended by manufacturer of electrified locking components with consideration for each electrified component using power supply, location of power supply, and approved wiring diagrams. Locate power supplies as directed by Architect.
   3. Provide regulated and filtered 24 VDC power supply, and UL class 2 listed.
   4. Provide power supplies with the following features:
      a. 12/24 VDC Output, field selectable.
      b. Class 2 Rated power limited output.
      c. Universal 120-240 VAC input.
      d. Low voltage DC, regulated and filtered.
      e. Polarized connector for distribution boards.
      f. Fused primary input.
      g. AC input and DC output monitoring circuit w/LED indicators.
      h. Cover mounted AC Input indication.
      i. Tested and certified to meet UL294.
      j. NEMA 1 enclosure.
      k. Hinged cover w/lock down screws.
      l. High voltage protective cover.

2.15 CYLINDERS

A. Manufacturers and Products:
   1. Scheduled Manufacturer and Product:
      a. Schlage Everest 29 S
   2. Acceptable Manufacturers:
      a. No Substitute

B. Requirements:
   1. Provide cylinders/cores compliant with ANSI/BHMA A156.5; latest revision; cylinder face finished to match lockset; manufacturer's series as indicated. Refer to "KEYING" article, herein.
   2. Provide cylinders in the below-listed configuration(s), distributed throughout the Project as indicated.
      a. Patented Open: cylinder with interchangeable core with open keyway.
   3. Patent Protection: Cylinders/cores requiring use of restricted, patented keys, patent protected.
   4. Nickel silver bottom pins.

2.16 KEYING

A. Scheduled System:
   1. New factory registered system:
      a. Provide a factory registered keying system, complying with guidelines in ANSI/BHMA A156.28, incorporating decisions made at keying conference.

B. Requirements:
   1. Permanent Keying:
      a. Provide permanent cylinders/cores keyed by the manufacturer according to the following key system.
         1) Master Keying system as directed by the Owner.
      b. Forward bitting list and keys separately from cylinders, by means as directed by Owner. Failure to comply with forwarding requirements will be cause for replacement of cylinders/cores involved at no additional cost to Owner.
      c. Provide keys with the following features:
         1) Material: Nickel silver; minimum thickness of .107-inch (2.3mm)
         2) Patent Protection: Keys and blanks protected by one or more utility patent(s).
         3) Geographically Exclusive: Where High Security or Security cylinders/cores are indicated, provide nationwide, geographically exclusive key system complying with the following restrictions.
      d. Identification:
         1) Mark permanent cylinders/cores and keys with applicable blind code for identification. Do not provide blind code marks with actual key cuts.
         2) Identification stamping provisions must be approved by the Architect and Owner.
         3) Stamp cylinders/cores and keys with Owner's unique key system facility code as established by the manufacturer; key symbol and embossed or stamped with "DO NOT DUPLICATE" along with the "PATENTED" or patent number to enforce the patent protection.
         4) Failure to comply with stamping requirements will be cause for replacement of keys involved at no additional cost to Owner.
         5) Forward permanent cylinders/cores to Owner, separately from keys, by means as directed by Owner.
      e. Quantity: Furnish in the following quantities.
         1) Change (Day) Keys: 3 per cylinder/core.
         2) Permanent Control Keys: 3.
         3) Master Keys: 6.

2.17 KEY CONTROL SYSTEM

A. Manufacturers:
   1. Scheduled Manufacturer:
      a. Telkee

B. Requirements:
   1. Provide key control system, including envelopes, labels, tags with self-locking key clips, receipt forms, 3-way visible card index, temporary markers, permanent markers, and standard metal cabinet, all as recommended by system manufacturer, with capacity for 150% of number of locks required for Project.

a. Provide complete cross index system set up by hardware supplier, and place keys on markers and hooks in cabinet as determined by final key schedule.
b. Provide hinged-panel type cabinet for wall mounting.

2.18 DOOR CLOSERS

A. Manufacturers and Products:
1. Scheduled Manufacturer and Product:
a. Falcon SC70A series
2. Acceptable Manufacturers:
a. No Substitute

B. Requirements:
1. Provide door closers conforming to ANSI/BHMA A156.4 Grade 1 requirements by BHMA certified independent testing laboratory. ISO 9000 certify closers. Stamp units with date of manufacture code.
2. Provide door closers with fully hydraulic, full rack and pinion action with aluminum cylinder.
3. Closer Body: 1-1/2-inch (38 mm) diameter with 5/8-inch (16 mm) diameter heat-treated pinion journal.
4. Hydraulic Fluid: Fireproof, passing requirements of UL10C, and requiring no seasonal closer adjustment for temperatures ranging from 120 degrees F to -30 degrees F.
5. Spring Power: Continuously adjustable over full range of closer sizes, and providing reduced opening force as required by accessibility codes and standards.
6. Hydraulic Regulation: By tamper-proof, non-critical valves, with separate adjustment for latch speed, general speed, and backcheck.
7. Pressure Relief Valve (PRV) Technology: Not permitted.
8. Provide special templates, drop plates, mounting brackets, or adapters for arms as required for details, overhead stops, and other door hardware items interfering with closer mounting.

2.19 DOOR CLOSERS

A. Manufacturers and Products:
1. Scheduled Manufacturer and Product:
a. Falcon SC80A series
2. Acceptable Manufacturers:
a. No Substitute

B. Requirements:
1. Provide door closers conforming to ANSI/BHMA A156.4 Grade 1 requirements by BHMA certified independent testing laboratory.
2. Provide door closers with fully hydraulic, full rack and pinion action with aluminum cylinder.
3. Closer Body: 1-1/4-inch (32 mm) diameter, with 5/8-inch (16 mm) diameter heat-treated pinion journal.
4. Hydraulic Fluid: Fireproof, passing requirements of UL10C, and requiring no seasonal closer adjustment for temperatures ranging from 120 degrees F to -30 degrees F.
5. Spring Power: Continuously adjustable over full range of closer sizes, and providing reduced opening force as required by accessibility codes and standards.
6. Hydraulic Regulation: By tamper-proof, non-critical valves, with separate adjustment for latch speed, general speed, and backcheck.
7. Pressure Relief Valve (PRV) Technology: Not permitted.

8. Provide special templates, drop plates, mounting brackets, or adapters for arms as required for details, overhead stops, and other door hardware items interfering with closer mounting.

2.20 DOOR TRIM

A. Manufacturers:
   1. Scheduled Manufacturer:
      a. Ives
   2. Acceptable Manufacturers:
      a. No Substitute

B. Requirements:
   1. Provide push plates, push bars, pull plates, pulls, and hands-free reversible door pulls with diameter and length as scheduled.

2.21 PROTECTION PLATES

A. Manufacturers:
   1. Scheduled Manufacturer:
      a. Ives
   2. Acceptable Manufacturers:
      a. No Substitute

B. Requirements:
   1. Provide protection plates with a minimum of 0.050 inch (1 mm) thick, beveled four edges as scheduled. Furnish with sheet metal or wood screws, finished to match plates.
   2. Sizes plates 2 inches (51 mm) less width of door on single doors, pairs of doors with a mullion, and doors with edge guards. Size plates 1 inch (25 mm) less width of door on pairs without a mullion or edge guards.
   3. At fire rated doors, provide protection plates over 16 inches high with UL label.

2.22 OVERHEAD STOPS AND OVERHEAD STOP/HOLDERS

A. Manufacturers:
   1. Scheduled Manufacturers:
      a. Glynn-Johnson
   2. Acceptable Manufacturers:
      a. No Substitute

B. Requirements:
   1. Provide overhead stop at any door where conditions do not allow for a wall stop or floor stop presents tripping hazard.
   2. Provide friction type at doors without closer and positive type at doors with closer.

2.23 DOOR STOPS AND HOLDERS

A. Manufacturers:
   1. Scheduled Manufacturer:
      a. Ives
   2. Acceptable Manufacturers:
      a. No Substitute

B. Provide door stops at each door leaf:

1. Provide wall stops wherever possible. Provide concave type where lockset has a push button of thumbturn.
2. Where a wall stop cannot be used, provide universal floor stops.
3. Where wall or floor stop cannot be used, provide overhead stop.
4. Provide roller bumper where doors open into each other and overhead stop cannot be used.

2.24 THRESHOLDS, SEALS, DOOR SWEEPS, AUTOMATIC DOOR BOTTOMS, AND GASKETING

A. Manufacturers:
   1. Scheduled Manufacturer:
      a. Zero International
   2. Acceptable Manufacturers:
      a. No Substitute

B. Requirements:
   1. Provide thresholds, weather-stripping, and gasketing systems as specified and per architectural details. Match finish of other items.
   2. Smoke- and Draft-Control Door Assemblies: Where smoke- and draft-control door assemblies are required, provide door hardware that meets requirements of assemblies tested according to UL 1784 and installed in compliance with NFPA 105.
   3. Provide door sweeps, seals, astragals, and auto door bottoms only of type where resilient or flexible seal strip is easily replaceable and readily available.
   4. Size thresholds 1/2 inch (13 mm) high by 5 inches (127 mm) wide by door width unless otherwise specified in the hardware sets or detailed in the drawings.

2.25 DOOR POSITION SWITCHES

A. Manufacturers:
   1. Scheduled Manufacturer:
      a. Schlage
   2. Acceptable Manufacturers:
      a. No Substitute

B. Requirements:
   1. Provide recessed or surface mounted type door position switches as specified.
   2. Coordinate door and frame preparations with door and frame suppliers. If switches are being used with magnetic locking device, provide minimum of 4 inches (102 mm) between switch and magnetic locking device.

2.26 COAT HOOKS

A. Manufacturers:
   1. Scheduled Manufacturer:
      a. Ives
   2. Acceptable Manufacturers:
      a. No Substitute

B. Provide coat hooks as specified.

2.27 FINISHES

A. FINISH: BHMA 626/652 (US26D); EXCEPT:
   1. Hinges at Exterior Doors: BHMA 630 (US32D)

2. Aluminum Geared Continuous Hinges: BHMA 628 (US28)
3. Push Plates, Pulls, and Push Bars: BHMA 630 (US32D)
4. Protection Plates: BHMA 630 (US32D)
5. Overhead Stops and Holders: BHMA 630 (US32D)
6. Door Closers: Powder Coat to Match
7. Wall Stops: BHMA 630 (US32D)
8. Latch Protectors: BHMA 630 (US32D)
9. Weatherstripping: Clear Anodized Aluminum
10. Thresholds: Mill Finish Aluminum

PART 3 EXECUTION

3.1 EXAMINATION

A. Prior to installation of hardware, examine doors and frames, with Installer present, for compliance with requirements for installation tolerances, labeled fire-rated door assembly construction, wall and floor construction, and other conditions affecting performance. Verify doors, frames, and walls have been properly reinforced for hardware installation.

B. Examine roughing-in for electrical power systems to verify actual locations of wiring connections before electrified door hardware installation.

C. Submit a list of deficiencies in writing and proceed with installation only after unsatisfactory conditions have been corrected.

3.2 INSTALLATION

A. Mount door hardware units at heights to comply with the following, unless otherwise indicated or required to comply with governing regulations.
   1. Standard Steel Doors and Frames: ANSI/SDI A250.8.
   2. Custom Steel Doors and Frames: HMMA 831.
   3. Interior Architectural Wood Flush Doors: ANSI/WDMA I.S. 1A
   4. Installation Guide for Doors and Hardware: DHI TDH-007-20

B. Install door hardware in accordance with NFPA 80, NFPA 101 and provide post-install inspection, testing as specified in section 1.03.E unless otherwise required to comply with governing regulations.

C. Install each hardware item in compliance with manufacturer's instructions and recommendations, using only fasteners provided by manufacturer.

D. Do not install surface mounted items until finishes have been completed on substrate. Protect all installed hardware during painting.

E. Set units level, plumb and true to line and location. Adjust and reinforce attachment substrate as necessary for proper installation and operation.

F. Drill and countersink units that are not factory prepared for anchorage fasteners. Space fasteners and anchors according to industry standards.

G. Install operating parts so they move freely and smoothly without binding, sticking, or excessive clearance.

H. Hinges: Install types and in quantities indicated in door hardware schedule but not fewer than quantity recommended by manufacturer for application indicated.

I. Lock Cylinders:
   1. Install construction cores to secure building and areas during construction period.
   2. Replace construction cores with permanent cores as indicated in keying section.
   3. Furnish permanent cores to Owner for installation.

J. Wiring: Coordinate with Division 26, ELECTRICAL and Division 28 ELECTRONIC SAFETY AND SECURITY sections for:
   1. Conduit, junction boxes and wire pulls.
   2. Connections to and from power supplies to electrified hardware.
   3. Connections to fire/smoke alarm system and smoke evacuation system.
   4. Connection of wire to door position switches and wire runs to central room or area, as directed by Architect.
   5. Connections to panel interface modules, controllers, and gateways.
   6. Testing and labeling wires with Architect's opening number.

K. Key Control System: Tag keys and place them on markers and hooks in key control system cabinet, as determined by final keying schedule.

L. Door Closers: Mount closers on room side of corridor doors, inside of exterior doors, and stair side of stairway doors from corridors. Mount closers so they are not visible in corridors, lobbies and other public spaces unless approved by Architect.

M. Closer/Holders: Mount closer/holders on room side of corridor doors, inside of exterior doors, and stair side of stairway doors.

N. Power Supplies: Locate power supplies as indicated or, if not indicated, above accessible ceilings or in equipment room, or alternate location as directed by Architect.

O. Thresholds: Set thresholds in full bed of sealant complying with requirements specified in Division 07 Section ''Joint Sealants.''

P. Stops: Provide floor stops for doors unless wall or other type stops are indicated in door hardware schedule. Do not mount floor stops where they may impede traffic or present tripping hazard.

Q. Perimeter Gasketing: Apply to head and jamb, forming seal between door and frame.

R. Meeting Stile Gasketing: Fasten to meeting stiles, forming seal when doors are closed.

S. Door Bottoms and Sweeps: Apply to bottom of door, forming seal with threshold when door is closed.

3.3 ADJUSTING

A. Initial Adjustment: Adjust and check each operating item of door hardware and each door to ensure proper operation or function of every unit. Replace units that cannot be adjusted to operate as intended. Adjust door control devices to compensate for final operation of heating and ventilating equipment and to comply with referenced accessibility requirements.
   1. Spring Hinges: Adjust to achieve positive latching when door can close freely from an open position of 30 degrees.

2. Electric Strikes: Adjust horizontal and vertical alignment of keeper to properly engage lock bolt.
3. Door Closers: Adjust sweep period to comply with accessibility requirements and requirements of authorities having jurisdiction.

B. Occupancy Adjustment: Approximately three to six months after date of Substantial Completion, examine and readjust each item of door hardware, including adjusting operating forces, as necessary to ensure function of doors and door hardware.

3.4 CLEANING AND PROTECTION

A. Clean adjacent surfaces soiled by door hardware installation.

B. Clean operating items per manufacturer's instructions to restore proper function and finish.

C. Provide final protection and maintain conditions that ensure door hardware is without damage or deterioration at time of Substantial Completion.

3.5 DOOR HARDWARE SCHEDULE

A. The intent of the hardware specification is to specify the hardware for interior and exterior doors, and to establish a type, continuity, and standard of quality. However, it is the door hardware supplier's responsibility to thoroughly review existing conditions, schedules, specifications, drawings, and other Contract Documents to verify the suitability of the hardware specified.

B. Discrepancies, conflicting hardware, and missing items are to be brought to the attention of the architect with corrections made prior to the bidding process. Omitted items not included in a hardware set should be scheduled with the appropriate additional hardware required for proper application.

C. Hardware items are referenced in the following hardware schedule. Refer to the above specifications for special features, options, cylinders/keying, and other requirements.

D. Hardware Sets:

Abbreviation	Name
B/O	By Others
BYO	By Others
FAL	Falcon
GLY	Glynn-Johnson Corp
IVE	H.B. Ives
SCE	Schlage Electronic Security
SCH	Schlage Lock Company
VON	Von Duprin
ZER	Zero International Inc

HARDWARE GROUP NO. 01

For use on Door #(s):

139A 141A 142A 143A 145A

Provide each SGL door(s) with the following:

QTY		DESCRIPTION	CATALOG NUMBER	FINISH	MFR
1	EA	CONT. HINGE	112HD	628	IVE
1	EA	STOREROOM LOCK	T581CP6 DAN	626	FAL
1	EA	SURFACE CLOSER	SC71A SS PROVIDE MTG BRKT, SPCR & PLATE AS REQ'D	689	FAL
1	EA	WEATHER STRIPPING	ALL SEALS & WEATHER STRIPPING WILL BE PROVIDED BY ALD/ALF CONTRACTOR		
1	EA	DOOR SWEEP	39A	A	ZER
1	EA	THRESHOLD	653A OR PER SILL DETAIL	A	ZER

HARDWARE GROUP NO. 02

For use on Door #(s):

116A	131A	149A	149B	149C	149D

Provide each PR door(s) with the following:

QTY		DESCRIPTION	CATALOG NUMBER	FINISH	MFR
2	EA	CONT. HINGE	112HD	628	IVE
1	EA	REMOVABLE MULLION	KR4023 STAB	689	FAL
1	EA	PANIC HARDWARE	25-R-EO	626	FAL
1	EA	PANIC HARDWARE	25-R-NL-OP	626	FAL
1	EA	RIM CYLINDER	20-057	626	SCH
1	EA	MORTISE CYLINDER	20-061	626	SCH
2	EA	90 DEG OFFSET PULL	8190EZHD 12" O	630-316	IVE
2	EA	OH STOP	100S	630	GLY
2	EA	SURFACE CLOSER	SC71A HDPA PROVIDE MTG BRKT, SPCR & PLATE AS REQ'D	689	FAL
1	EA	MULLION SEAL	8780NBK PSA	BK	ZER
1	EA	WEATHER STRIPPING	ALL SEALS & WEATHER STRIPPING WILL BE PROVIDED BY ALD/ALF CONTRACTOR		
2	EA	DOOR SWEEP	39A	A	ZER
1	EA	THRESHOLD	653A OR PER SILL DETAIL	A	ZER

HARDWARE GROUP NO. 03

For use on Door #(s):

110B

Provide each SGL door(s) with the following:

QTY		DESCRIPTION	CATALOG NUMBER	FINISH	MFR
1	EA	CONT. HINGE	112HD	628	IVE
1	EA	PANIC HARDWARE	25-R-NL-OP	626	FAL
1	EA	RIM CYLINDER	20-057	626	SCH
1	EA	90 DEG OFFSET PULL	8190EZHD 12" O	630-31 6	IVE
1	EA	SURFACE CLOSER	SC71A RW/PA PROVIDE MTG BRKT, SPCR & PLATE AS REQ'D	689	FAL
1	EA	FLOOR STOP	FS17	626	IVE
1	EA	WEATHER STRIPPING	ALL SEALS & WEATHER STRIPPING WILL BE PROVIDED BY ALD/ALF CONTRACTOR		
1	EA	DOOR SWEEP	39A	A	ZER
1	EA	THRESHOLD	653A OR PER SILL DETAIL	A	ZER

HARDWARE GROUP NO. 04

For use on Door #(s):

108B 130A

Provide each SGL door(s) with the following:

QTY		DESCRIPTION	CATALOG NUMBER	FINISH	MFR
1	EA	CONT. HINGE	112HD	628	IVE
1	EA	PANIC HARDWARE	25-R-NL-OP	626	FAL
1	EA	RIM CYLINDER	20-057	626	SCH
1	EA	90 DEG OFFSET PULL	8190EZHD 12" O	630-31 6	IVE
1	EA	OH STOP	100S	630	GLY
1	EA	SURFACE CLOSER	SC71A RW/PA PROVIDE MTG BRKT, SPCR & PLATE AS REQ'D	689	FAL

1	EA	WEATHER STRIPPING	ALL SEALS & WEATHER STRIPPING WILL BE PROVIDED BY ALD/ALF CONTRACTOR		
1	EA	DOOR SWEEP	39A	A	ZER
1	EA	THRESHOLD	653A OR PER SILL DETAIL	A	ZER

HARDWARE GROUP NO. 05

For use on Door #(s):

130B

Provide each SGL door(s) with the following:

QTY		DESCRIPTION	CATALOG NUMBER	FINISH	MFR
1	EA	CONT. HINGE	112HD	628	IVE
1	EA	DUMMY PUSH BAR	250DT LENGTH AS REQ	626	FAL
1	EA	90 DEG OFFSET PULL	8190EZHD 12" O	630-31 6	IVE
1	EA	SURFACE CLOSER	SC71A RW/PA PROVIDE MTG BRKT, SPCR & PLATE AS REQ'D	689	FAL
1	EA	WALL STOP	WS406/407CCV	626	IVE
1	EA	GASKETING	ALL SEALS WILL BE PROVIDED BY ALD/ALF CONTRACTOR		BYO

HARDWARE GROUP NO. 06

For use on Door #(s):

107A 107B 108A

Provide each PR door(s) with the following:

QTY		DESCRIPTION	CATALOG NUMBER	FINISH	MFR
2	EA	CONT. HINGE	112HD	628	IVE
1	EA	PANIC HARDWARE	25-V-EO-LBR	626	FAL
1	EA	PANIC HARDWARE	25-V-L-LBR-DANE	626	FAL
1	EA	MORTISE CYLINDER	20-061	626	SCH
2	EA	OH STOP	100S	630	GLY
2	EA	SURFACE CLOSER	SC71A RW/PA PROVIDE MTG BRKT, SPCR & PLATE AS REQ'D	689	FAL

1	EA	GASKETING	ALL SEALS WILL BE PROVIDED BY ALD/ALF CONTRACTOR		BYO

HARDWARE GROUP NO. 07

For use on Door #(s):

116B 131B 147A

Provide each PR door(s) with the following:

QTY		DESCRIPTION	CATALOG NUMBER		FINISH	MFR
2	EA	CONT. HINGE	112HD		628	IVE
1	EA	REMOVABLE MULLION	KR4854B STAB		689	VON
1	EA	PANIC HARDWARE	25-R-EO		626	FAL
1	EA	PANIC HARDWARE	25-R-NL-OP		626	FAL
1	EA	RIM CYLINDER	20-057		626	SCH
1	EA	MORTISE CYLINDER	20-061		626	SCH
1	EA	ELECTRIC STRIKE	6300 FSE 12/24 VAC/VDC	~	630	VON
1	EA	90 DEG OFFSET PULL	8190EZHD 12" O		630-316	IVE
2	EA	OH STOP	100S		630	GLY
2	EA	SURFACE CLOSER	SC71A HDPA PROVIDE MTG BRKT, SPCR & PLATE AS REQ'D		689	FAL
1	EA	MULLION SEAL	8780NBK PSA		BK	ZER
1	EA	WEATHER STRIPPING	ALL SEALS & WEATHER STRIPPING WILL BE PROVIDED BY ALD/ALF CONTRACTOR			
2	EA	DOOR SWEEP	39A		A	ZER
1	EA	THRESHOLD	653A OR PER SILL DETAIL		A	ZER
1	EA	WIRE HARNESS	CON-XXP (LENGTH AS REQUIRED)			VON
1	EA	MULTITECH READER	MTB15 5VDC - 28VDC	~	BLK	SCE
2	EA	DOOR CONTACT	679-05 TYPE AS REQ	~	WHT	SCE
1	EA	POWER SUPPLY	PS902 120/240 VAC	~	LGR	SCE
1		WIRING DIAGRAM	CUSTOM FACTORY ELEVATION/POINT TO POINT			

NOTE: POWER SUPPLY, CONDUIT, WIRING, ELEVATION, AND POINT TO POINT DIAGRAM TO BE COORDINATED WITH DIVISION 28.

ELECTRICAL OPERATIONAL DESCRIPTION:

DOOR NORMALLY CLOSED AND LOCKED. FROM THE SECURE SIDE PRESENTING VALID CREDENTIAL TO CARD READER RELEASES ELECTRIC STRIKE ALLOWING ENTRY. AFTER ENTRY THE DOOR RETURNS TO THE CLOSED AND LATCHED POSITION. A KEY OVERRIDE WILL ALSO ENABLE ENTRY. FROM THE NON-SECURE SIDE, PRESSING THE PUSHPAD RETRACTS LATCH

ALLOWING EGRESS. DURING A POWER OUTAGE, THE DOOR WILL REMAIN LOCKED AND WILL CONTINUE TO ALLOW FREE EGRESS AT ALL TIMES.
DOOR POSITION SWITCH MONITORS DOOR FOR OPEN/CLOSED POSITION.

HARDWARE GROUP NO. 08

For use on Door #(s):

100

Provide each PR door(s) with the following:

QTY		DESCRIPTION	CATALOG NUMBER	FINISH	MFR
2	EA	CONT. HINGE	112HD	628	IVE
2	EA	PUSH/PULL BAR	9103EZHD-12"-NS	630-31 6	IVE
2	EA	SURFACE CLOSER	SC71A RW/PA PROVIDE MTG BRKT, SPCR & PLATE AS REQ'D	689	FAL
2	EA	FLOOR STOP	FS17	626	IVE
1	EA	GASKETING	ALL SEALS WILL BE PROVIDED BY ALD/ALF CONTRACTOR		BYO

HARDWARE GROUP NO. 09

For use on Door #(s):

107C

Provide each PR door(s) with the following:

QTY		DESCRIPTION	CATALOG NUMBER	FINISH	MFR
2	EA	CONT. HINGE	112HD	628	IVE
2	EA	PUSH/PULL BAR	9103EZHD-12"-NS	630-31 6	IVE
2	EA	OH STOP	100S	630	GLY
2	EA	SURFACE CLOSER	SC71A RW/PA PROVIDE MTG BRKT, SPCR & PLATE AS REQ'D	689	FAL
1	EA	GASKETING	ALL SEALS WILL BE PROVIDED BY ALD/ALF CONTRACTOR		BYO

NOTE: PROVIDE IVES WALL STOP (WS406/407CCV) OR FLOOR STOP (FS17) IN LIEU OF GLYN JOHNSON OVERHEAD STOP (100S). PLEASE VERIFY.

HARDWARE GROUP NO. 10

For use on Door #(s):

104

Provide each SGL door(s) with the following:

QTY		DESCRIPTION	CATALOG NUMBER	FINISH	MFR
3	EA	HINGE	5BB1 4.5 X 4.5 NRP	630	IVE
1	EA	STOREROOM LOCK	T581CP6 DAN	626	FAL
1	EA	SURFACE CLOSER	SC71A SS	689	FAL
1	EA	KICK PLATE	8400 10" X 2" LDW B-CS	630	IVE
1	EA	RAIN DRIP	142AA(IF EXPOSED ABOVE)	AA	ZER
1	EA	GASKETING	8303AA	AA	ZER
1	EA	DOOR SWEEP	111AA	AA	ZER
1	EA	THRESHOLD	653A OR PER SILL DETAIL	A	ZER

HARDWARE GROUP NO. 11

For use on Door #(s):

103A 111A

Provide each PR door(s) with the following:

QTY		DESCRIPTION	CATALOG NUMBER	FINISH	MFR
6	EA	HINGE	5BB1HW 5 X 4.5 NRP	630	IVE
1	EA	AUTO FLUSH BOLT	FB31P	630	IVE
1	EA	DUST PROOF STRIKE	DP2	626	IVE
1	EA	STOREROOM LOCK	T581CP6 DAN	626	FAL
1	EA	COORDINATOR	COR X FL X MB AS REQUIRED	628	IVE
2	EA	SURFACE CLOSER	SC71A SS	689	FAL
2	EA	KICK PLATE	8400 10" X 1" LDW B-CS	630	IVE
1	EA	RAIN DRIP	142AA(IF EXPOSED ABOVE)	AA	ZER
1	EA	GASKETING	8303AA	AA	ZER
2	EA	DOOR SWEEP	111AA	AA	ZER
1	EA	ASTRAGAL	43SP X 188SBK	SP	ZER
1	EA	THRESHOLD	653A OR PER SILL DETAIL	A	ZER

HARDWARE GROUP NO. 12

For use on Door #(s):

110A

Provide each SGL door(s) with the following:

QTY		DESCRIPTION	CATALOG NUMBER	FINISH	MFR
3	EA	HINGE	5BB1HW 4.5 X 4.5 NRP	630	IVE
1	EA	PANIC HARDWARE	25-R-L-NL-DANE	626	FAL
1	EA	MORTISE CYLINDER	20-061	626	SCH
1	EA	SURFACE CLOSER	SC71A SS	689	FAL
1	EA	KICK PLATE	8400 10" X 2" LDW B-CS	630	IVE
1	EA	RAIN DRIP	142AA(IF EXPOSED ABOVE)	AA	ZER
1	EA	GASKETING	8303AA	AA	ZER
1	EA	DOOR SWEEP	111AA	AA	ZER
1	EA	THRESHOLD	653A OR PER SILL DETAIL	A	ZER

HARDWARE GROUP NO. 13

For use on Door #(s):

101

Provide each SGL door(s) with the following:

QTY		DESCRIPTION	CATALOG NUMBER	FINISH	MFR
3	EA	HINGE	5BB1 4.5 X 4.5	652	IVE
1	EA	STOREROOM LOCK	T581CP6 DAN	626	FAL
1	EA	SURFACE CLOSER	SC81A RW/PA	689	FAL
1	EA	KICK PLATE	8400 10" X 2" LDW B-CS	630	IVE
1	EA	WALL STOP	WS406/407CCV	626	IVE
1	EA	GASKETING	188SBK PSA (USE SILENCERS @ NON-RATED DOORS)	BK	ZER

HARDWARE GROUP NO. 14

For use on Door #(s):

102

Provide each SGL door(s) with the following:

QTY	DESCRIPTION	CATALOG NUMBER	FINISH	MFR

3	EA	HINGE	5BB1HW 5 X 4.5 NRP	652	IVE
1	EA	STOREROOM LOCK	T581CP6 DAN	626	FAL
1	EA	SURFACE CLOSER	SC81A SS	689	FAL
1	EA	KICK PLATE	8400 10" X 2" LDW B-CS	630	IVE
1	EA	GASKETING	188SBK PSA (USE SILENCERS @ NON-RATED DOORS)	BK	ZER

HARDWARE GROUP NO. 15

For use on Door #(s):

154

Provide each SGL door(s) with the following:

QTY		DESCRIPTION	CATALOG NUMBER	FINISH	MFR
3	EA	HINGE	5BB1HW 5 X 4.5	652	IVE
1	EA	STOREROOM LOCK	T581CP6 DAN	626	FAL
1	EA	WALL STOP	WS406/407CCV	626	IVE
1	EA	GASKETING	188SBK PSA (USE SILENCERS @ NON-RATED DOORS)	BK	ZER

HARDWARE GROUP NO. 16

For use on Door #(s):

105 115 128 161

Provide each SGL door(s) with the following:

QTY		DESCRIPTION	CATALOG NUMBER	FINISH	MFR
3	EA	HINGE	5BB1 4.5 X 4.5	652	IVE
1	EA	STOREROOM LOCK	T581CP6 DAN	626	FAL
1	EA	WALL STOP	WS406/407CCV	626	IVE
1	EA	GASKETING	188SBK PSA (USE SILENCERS @ NON-RATED DOORS)	BK	ZER

HARDWARE GROUP NO. 17

For use on Door #(s):

135B

Provide each SGL door(s) with the following:

QTY		DESCRIPTION	CATALOG NUMBER	FINISH	MFR
3	EA	HINGE	5BB1 4.5 X 4.5 NRP	652	IVE
1	EA	STOREROOM LOCK	T581CP6 DAN	626	FAL
1	EA	WALL STOP	WS406/407CCV	626	IVE
1	EA	GASKETING	188SBK PSA (USE SILENCERS @ NON-RATED DOORS)	BK	ZER

HARDWARE GROUP NO. 18

For use on Door #(s):

103B

Provide each SGL door(s) with the following:

QTY		DESCRIPTION	CATALOG NUMBER	FINISH	MFR
3	EA	HINGE	5BB1HW 5 X 4.5 NRP	652	IVE
1	EA	STOREROOM LOCK	T581CP6 DAN	626	FAL
1	EA	SURFACE CLOSER	SC81A RW/PA	689	FAL
1	EA	KICK PLATE	8400 10" X 2" LDW B-CS	630	IVE
1	EA	WALL STOP	WS406/407CCV	626	IVE
1	EA	GASKETING	188SBK PSA (USE SILENCERS @ NON-RATED DOORS)	BK	ZER

HARDWARE GROUP NO. 19

For use on Door #(s):

148A 148B

Provide each PR door(s) with the following:

QTY		DESCRIPTION	CATALOG NUMBER	FINISH	MFR
6	EA	HINGE	5BB1HW 5 X 4.5	652	IVE
1	EA	CONST LATCHING BOLT	FB51P	630	IVE
1	EA	DUST PROOF STRIKE	DP2	626	IVE
1	EA	STOREROOM LOCK	T581CP6 DAN	626	FAL
2	EA	OH STOP	450S	630	GLY
1	EA	SURFACE CLOSER	SC71A RW/PA	689	FAL
2	EA	KICK PLATE	8400 10" X 1" LDW B-CS	630	IVE

1	EA	GASKETING	188SBK PSA (USE SILENCERS @ NON-RATED DOORS)	BK	ZER

HARDWARE GROUP NO. 20

For use on Door #(s):

137

Provide each PR door(s) with the following:

QTY		DESCRIPTION	CATALOG NUMBER	FINISH	MFR
6	EA	HINGE	5BB1 4.5 X 4.5 NRP	652	IVE
1	EA	CONST LATCHING BOLT	FB51P	630	IVE
1	EA	DUST PROOF STRIKE	DP2	626	IVE
1	EA	STOREROOM LOCK	T581CP6 DAN	626	FAL
1	EA	SURFACE CLOSER	SC81A SS	689	FAL
2	EA	KICK PLATE	8400 10" X 1" LDW B-CS	630	IVE
1	EA	WALL STOP	WS406/407CCV	626	IVE
1	EA	GASKETING	188SBK PSA (USE SILENCERS @ NON-RATED DOORS)	BK	ZER

HARDWARE GROUP NO. 21

For use on Door #(s):

120

Provide each PR door(s) with the following:

QTY		DESCRIPTION	CATALOG NUMBER	FINISH	MFR
8	EA	HINGE	5BB1 4.5 X 4.5 NRP	652	IVE
2	EA	DUTCH DOOR BOLT	054	626	IVE
2	EA	SURFACE BOLT	SB453 8" TB	652	IVE
1	EA	STOREROOM LOCK	T581CP6 DAN	626	FAL
2	EA	OH STOP	450S	630	GLY
1	EA	GASKETING	188SBK PSA (USE SILENCERS @ NON-RATED DOORS)	BK	ZER

HARDWARE GROUP NO. 22

For use on Door #(s):

110C

Provide each SGL door(s) with the following:

QTY		DESCRIPTION	CATALOG NUMBER	FINISH	MFR
3	EA	HINGE	5BB1HW 4.5 X 4.5	652	IVE
1	EA	CLASSROOM SEC LOCK	T381CP6 DAN	626	FAL
1	EA	OH STOP	90S	630	GLY
1	EA	SURFACE CLOSER	SC71A RW/PA	689	FAL
1	EA	KICK PLATE	8400 10" X 2" LDW B-CS	630	IVE
1	EA	GASKETING	188SBK PSA (USE SILENCERS @ NON-RATED DOORS)	BK	ZER

HARDWARE GROUP NO. 23

For use on Door #(s):

110D 118 121 123 126 141B 142B

Provide each SGL door(s) with the following:

QTY		DESCRIPTION	CATALOG NUMBER	FINISH	MFR
3	EA	HINGE	5BB1HW 4.5 X 4.5	652	IVE
1	EA	CLASSROOM SEC LOCK	T381CP6 DAN	626	FAL
1	EA	SURFACE CLOSER	SC71A RW/PA	689	FAL
1	EA	KICK PLATE	8400 10" X 2" LDW B-CS	630	IVE
1	EA	WALL STOP	WS406/407CCV	626	IVE
1	EA	GASKETING	188SBK PSA (USE SILENCERS @ NON-RATED DOORS)	BK	ZER

HARDWARE GROUP NO. 24

For use on Door #(s):

139B

Provide each SGL door(s) with the following:

QTY		DESCRIPTION	CATALOG NUMBER	FINISH	MFR
3	EA	HINGE	5BB1HW 4.5 X 4.5 NRP	652	IVE
1	EA	CLASSROOM SEC LOCK	T381CP6 DAN	626	FAL
1	EA	SURFACE CLOSER	SC71A RW/PA	689	FAL

1	EA	KICK PLATE	8400 10" X 2" LDW B-CS	630	IVE
1	EA	WALL STOP	WS406/407CCV	626	IVE
1	EA	GASKETING	188SBK PSA (USE SILENCERS @ NON-RATED DOORS)	BK	ZER

HARDWARE GROUP NO. 25

For use on Door #(s):

143B 145B

Provide each SGL door(s) with the following:

QTY		DESCRIPTION	CATALOG NUMBER	FINISH	MFR
3	EA	HINGE	5BB1HW 4.5 X 4.5 NRP	652	IVE
1	EA	CLASSROOM SEC LOCK	T381CP6 DAN	626	FAL
1	EA	SURFACE CLOSER	SC71A RW/PA	689	FAL
1	EA	KICK PLATE	8400 10" X 2" LDW B-CS	630	IVE
1	EA	WALL STOP	WS406/407CCV	626	IVE
1	EA	GASKETING	ALL SEALS WILL BE PROVIDED BY ALD/ALF CONTRACTOR		BYO

HARDWARE GROUP NO. 26

For use on Door #(s):

113 134

Provide each SGL door(s) with the following:

QTY		DESCRIPTION	CATALOG NUMBER	FINISH	MFR
3	EA	HINGE	5BB1 4.5 X 4.5	652	IVE
1	EA	CLASSROOM LOCK	T561CP6 DAN	626	FAL
1	EA	SURFACE CLOSER	SC81A RW/PA PROVIDE MTG BRKT, SPCR & PLATE AS REQ'D	689	FAL
1	EA	KICK PLATE	8400 10" X 2" LDW B-CS	630	IVE
1	EA	WALL STOP	WS406/407CCV	626	IVE
1	EA	GASKETING	188SBK PSA (USE SILENCERS @ NON-RATED DOORS)	BK	ZER

HARDWARE GROUP NO. 27

For use on Door #(s):

111D 135A

Provide each SGL door(s) with the following:

QTY		DESCRIPTION	CATALOG NUMBER	FINISH	MFR
3	EA	HINGE	5BB1 4.5 X 4.5	652	IVE
1	EA	CLASSROOM LOCK	T561CP6 DAN	626	FAL
1	EA	OH STOP	450S	630	GLY
1	EA	SURFACE CLOSER	SC81A RW/PA	689	FAL
1	EA	KICK PLATE	8400 10" X 2" LDW B-CS	630	IVE
1	EA	GASKETING	188SBK PSA (USE SILENCERS @ NON-RATED DOORS)	BK	ZER

HARDWARE GROUP NO. 28

For use on Door #(s):

112 138 155

Provide each SGL door(s) with the following:

QTY		DESCRIPTION	CATALOG NUMBER	FINISH	MFR
3	EA	HINGE	5BB1 4.5 X 4.5	652	IVE
1	EA	PRIVACY LOCK	MA301 OCCUPIED/VACANT DGM	626	FAL
1	EA	SURFACE CLOSER	SC81A RW/PA	689	FAL
1	EA	KICK PLATE	8400 10" X 2" LDW B-CS	630	IVE
1	EA	WALL STOP	WS406/407CCV	626	IVE
1	EA	GASKETING	188SBK PSA (USE SILENCERS @ NON-RATED DOORS)	BK	ZER
1	EA	COAT AND HAT HOOK	582	626	IVE

HARDWARE GROUP NO. 29

For use on Door #(s):

129

Provide each SGL door(s) with the following:

QTY		DESCRIPTION	CATALOG NUMBER	FINISH	MFR
3	EA	HINGE	5BB1 4.5 X 4.5	652	IVE

1	EA	PRIVACY LOCK	MA301 OCCUPIED/VACANT DGM	626	FAL
1	EA	OH STOP	450S	630	GLY
1	EA	SURFACE CLOSER	SC81A RW/PA	689	FAL
1	EA	KICK PLATE	8400 10" X 2" LDW B-CS	630	IVE
1	EA	GASKETING	188SBK PSA (USE SILENCERS @ NON-RATED DOORS)	BK	ZER
1	EA	COAT AND HAT HOOK	582	626	IVE

HARDWARE GROUP NO. 30

For use on Door #(s):

106A	106B	106C	106D	106E	106F
109A	109B	109C	109D	119	122
124	125A	125B	125C	125D	125E
127					

Provide each SGL door(s) with the following:

QTY		DESCRIPTION	CATALOG NUMBER	FINISH	MFR
3	EA	HINGE	5BB1 4.5 X 4.5	652	IVE
1	EA	PRIVACY LOCK	T301S DAN	626	FAL
1	EA	WALL STOP	WS406/407CCV	626	IVE
1	EA	GASKETING	188SBK PSA (USE SILENCERS @ NON-RATED DOORS)	BK	ZER
1	EA	COAT AND HAT HOOK	582	626	IVE

HARDWARE GROUP NO. 31

For use on Door #(s):

114	136

Provide each SGL door(s) with the following:

QTY		DESCRIPTION	CATALOG NUMBER	FINISH	MFR
3	EA	HINGE	5BB1 4.5 X 4.5	652	IVE
1	EA	ENTRY LOCK	T501CP6 DAN	626	FAL
1	EA	WALL STOP	WS406/407CCV	626	IVE
1	EA	GASKETING	188SBK PSA (USE SILENCERS @ NON-RATED DOORS)	BK	ZER

HARDWARE GROUP NO. 32

For use on Door #(s):

147B

Provide each PR door(s) with the following:

QTY		DESCRIPTION	CATALOG NUMBER		FINISH	MFR
6	EA	HINGE	5BB1HW 4.5 X 4.5 NRP		652	IVE
1	EA	REMOVABLE MULLION	KR4854B STAB		689	VON
1	EA	PANIC HARDWARE	25-R-EO		626	FAL
1	EA	PANIC HARDWARE	25-R-L-NL-DANE		626	FAL
2	EA	MORTISE CYLINDER	20-061		626	SCH
1	EA	ELECTRIC STRIKE	6300 FSE 12/24 VAC/VDC	~	630	VON
2	EA	SURFACE CLOSER	SC71A SS		689	FAL
2	EA	KICK PLATE	8400 10" X 2" LDW B-CS		630	IVE
1	EA	GASKETING	188SBK PSA (USE SILENCERS @ NON-RATED DOORS)		BK	ZER
2	SET	MEETING STILE	328AA-S		AA	ZER
1	EA	MULLION SEAL	8780NBK PSA		BK	ZER
2	EA	DOOR SWEEP	39A		A	ZER
1	EA	THRESHOLD	653A OR PER SILL DETAIL		A	ZER
1	EA	WIRE HARNESS	CON-XXP (LENGTH AS REQUIRED)			VON
1	EA	MULTITECH READER	MTB15 5VDC - 28VDC	~	BLK	SCE
2	EA	DOOR CONTACT	679-05 TYPE AS REQ	~	WHT	SCE
1	EA	POWER SUPPLY	PS902 120/240 VAC	~	LGR	SCE
1		WIRING DIAGRAM	CUSTOM FACTORY ELEVATION/POINT TO POINT			

NOTE: POWER SUPPLY, CONDUIT, WIRING, ELEVATION, AND POINT TO POINT DIAGRAM TO BE COORDINATED WITH DIVISION 28.

ELECTRICAL OPERATIONAL DESCRIPTION:

DOOR NORMALLY CLOSED AND LOCKED. FROM THE SECURE SIDE PRESENTING VALID CREDENTIAL TO CARD READER RELEASES ELECTRIC STRIKE ALLOWING ENTRY. AFTER ENTRY THE DOOR RETURNS TO THE CLOSED AND LATCHED POSITION. A KEY OVERRIDE WILL ALSO ENABLE ENTRY. FROM THE NON-SECURE SIDE, PRESSING THE PUSHPAD RETRACTS LATCH ALLOWING EGRESS. DURING A POWER OUTAGE, THE DOOR WILL REMAIN LOCKED AND WILL CONTINUE TO ALLOW FREE EGRESS AT ALL TIMES.

DOOR POSITION SWITCH MONITORS DOOR FOR OPEN/CLOSED POSITION.

HARDWARE GROUP NO. 33

For use on Door #(s):

111B 111C

Provide each SGL door(s) with the following:

QTY		DESCRIPTION	CATALOG NUMBER	FINISH	MFR
3	EA	HINGE	5BB1HW 4.5 X 4.5	652	IVE
1	EA	SGL CYL X TURN DB	D141CP6	626	FAL
1	EA	PUSH PLATE	8200 6" X 16"	630	IVE
1	EA	PULL PLATE	8303 10" 6" X 16"	630	IVE
1	EA	OH STOP	90S	630	GLY
1	EA	SURFACE CLOSER	SC71A RW/PA	689	FAL
1	EA	KICK PLATE	8400 10" X 2" LDW B-CS	630	IVE
1	EA	GASKETING	188SBK PSA (USE SILENCERS @ NON-RATED DOORS)	BK	ZER

HARDWARE GROUP NO. 34

For use on Door #(s):

150 151

Provide each SGL door(s) with the following:

QTY		DESCRIPTION	CATALOG NUMBER	FINISH	MFR
3	EA	HINGE	5BB1HW 4.5 X 4.5	652	IVE
1	EA	CLASSRM DEADBOLT	D111CP6	626	FAL
1	EA	PUSH PLATE	8200 6" X 16"	630	IVE
1	EA	PULL PLATE	8303 10" 6" X 16"	630	IVE
1	EA	SURFACE CLOSER	SC71A RW/PA	689	FAL
1	EA	KICK PLATE	8400 10" X 2" LDW B-CS	630	IVE
1	EA	WALL STOP	WS406/407CCV	626	IVE
1	EA	GASKETING	188SBK PSA (USE SILENCERS @ NON-RATED DOORS)	BK	ZER

NOTE: PROVIDE GLYN JOHNSON OVERHEAD STOP (450S) IN LIEU OF IVES WALL STOP (WS406/407CCV) AS REQUIRED TO SUIT DOOR SWING CONDITIONS.

HARDWARE GROUP NO. 35

For use on Door #(s):

152 153

Provide each PR door(s) with the following:

QTY		DESCRIPTION	CATALOG NUMBER	FINISH	MFR
1	EA		ALL HARDWARE BY GATE DOOR MANUFCATURER		B/O

END OF SECTION

SECTION 088000 - GLAZING

PART 1 GENERAL

1.1 SECTION INCLUDES

A. Insulating glass units.

B. Glazing units.

C. Glazing compounds.

1.2 RELATED REQUIREMENTS

A. Section 064100 - Architectural Wood Casework: Cabinets with requirements for glass shelves and _____.

B. Section 081113 - Hollow Metal Doors and Frames: Glazed lites in doors and borrowed lites.

C. Section 081416 - Flush Wood Doors: Glazed lites in doors.

D. Section 084313 - Aluminum Entrances and Storefront Systems: Glazing provided as part of storefront assembly.

1.3 REFERENCE STANDARDS

A. 16 CFR 1201 - Safety Standard for Architectural Glazing Materials; Current Edition.

B. AAMA 501.6 - Recommended Dynamic Test Method for Determining the Seismic Drift Causing Glass Fallout from Window Wall, Curtain Wall and Storefront Systems; 2018.

C. ANSI Z97.1 - American National Standard for Safety Glazing Materials Used in Buildings - Safety Performance Specifications and Methods of Test; 2015 (Reaffirmed 2020).

D. ASCE 7 - Minimum Design Loads and Associated Criteria for Buildings and Other Structures; Most Recent Edition Cited by Referring Code or Reference Standard.

E. ASTM C864 - Standard Specification for Dense Elastomeric Compression Seal Gaskets, Setting Blocks, and Spacers; 2005 (Reapproved 2019).

F. ASTM C920 - Standard Specification for Elastomeric Joint Sealants; 2018.

G. ASTM C1036 - Standard Specification for Flat Glass; 2021.

H. ASTM C1048 - Standard Specification for Heat-Strengthened and Fully Tempered Flat Glass; 2018.

I. ASTM C1172 - Standard Specification for Laminated Architectural Flat Glass; 2019.

J. ASTM C1193 - Standard Guide for Use of Joint Sealants; 2016.

K. ASTM C1376 - Standard Specification for Pyrolytic and Vacuum Deposition Coatings on Flat Glass; 2021a.

L. ASTM E1300 - Standard Practice for Determining Load Resistance of Glass in Buildings; 2016.

M. ASTM E2190 - Standard Specification for Insulating Glass Unit Performance and Evaluation; 2019.

N. GANA (GM) - GANA Glazing Manual; 2008.

O. GANA (SM) - GANA Sealant Manual; 2008.

P. GANA (LGRM) - Laminated Glazing Reference Manual; 2009.

Q. ICC (IBC) - 2018 - International Building Code; 2018.

R. IGMA TM-3000 - North American Glazing Guidelines for Sealed Insulating Glass Units for Commercial & Residential Use; 1990 (2016).

S. NFRC 100 - Procedure for Determining Fenestration Product U-factors; 2020.

T. NFRC 200 - Procedure for Determining Fenestration Product Solar Heat Gain Coefficient and Visible Transmittance at Normal Incidence; 2020.

U. NFRC 300 - Test Method for Determining the Solar Optical Properties of Glazing Materials and Systems; 2020.

1.4 PERFORMANCE REQUIREMENTS

A. General: Provide glazing systems capable of withstanding normal thermal movement and wind and impact loads (where applicable) without failure, including loss or glass breakage attributable to defective manufacture, fabrication or installation

B. Glass Design
   1. Vertical glazing shall have a statistical factor of 2.5 (8 lites per 1,000 lites probability of breakage) at design wind pressure. Load duration of 60 seconds or less.
   2. Sloped glazing shall have a probability of breakage of 1 lite per 1,000 lites. Load duration of 30 days.
   3. Glass thicknesses indicated are minimums and are for detailing only. Confirm actual project glass thicknesses by analyzing specified loads and in service conditions.
   4. Provide glass lites for various size openings in normal thicknesses indicated, but not less than thicknesses and in strengths (annealed or heat treated) required to meet or exceed the criteria under “Glass Thickness” below.
   5. Limit glass deflection to 1/200 or flexure limit of glass, whichever is less, with full recovery of glazing materials.
   6. Glass Thickness: Select minimum thickness, fabrication and heat treatment to comply with ASTM E1300, according to the following requirements or ¼ inch, whichever is greater:
   7. Specified Design Wind Loads: Determine design wind loads applicable to Project from IBC; 2012, Structural Engineer. Provide glass in adjacent windows or glazed panels of the same thickness unless indicated otherwise.
   8. Sound Transmission Control: The design of the exterior wall system on this project is subject to specific Sound Transmission Control (STC) requirements. Those conditions are indicated in the Contract Documents and specified herein.
   9. Edge Preparation: Conform to manufacturer’s printed standards and the latest standards of GANA.

C. Thermal Movements: Provide glazing that allows for thermal movements resulting from the following maximum range in ambient and surface temperatures acting on glass framing members and glazing components. Base engineering calculation on surface temperatures of materials due to both solar heat gain and night heat loss:
   1. Temperature range: 120 degrees F, ambient, 180 degrees F, material surfaces.

D. Thermal and Optical Performance Properties: Provide glass with performance properties specified based on manufacturer's published test data, as determined according to procedures indicated below:
   1. For monolithic glass lites, properties are based on units with lites ¼ inch (6mm) thick.
   2. For laminated glass lites, properties are based on products of construction indicated.
   3. For insulated glass units, properties are based on units with lites ¼ inch (6mm) thick and a nominal ½ inch (~12mm) wide air space.
   4. Center of glass U Values: NFRC 100 methodology using LBL-35298 WINDOW 4.1 computer program, expressed in Btu/sq. ft. x h x degree F.
   5. Center of glass Solar Heat Gain Coefficient: NFRC 200 methodology using LBL-35298 WINDOW 4.1 computer program.
   6. Solar Optical Properties: NFRC 300.

1.5 DEFINITIONS

A. Sealed Insulating Glass Unit Surfaces:
   1. Surface No. 1: Exterior surface of outer lite.
   2. Surface No. 2: Interior surface of outer lite.
   3. Surface No. 3: Exterior surface of inner lite.
   4. Surface No. 4: Interior surface of inner lite.

1.6 ADMINISTRATIVE REQUIREMENTS

A. Preinstallation Meeting: Convene a preinstallation meeting one week before starting work of this section; require attendance by each of the affected installers.

1.7 SUBMITTALS

A. See Section 013000 - Administrative Requirements for submittal procedures.

B. Product Data:
   1. Submit manufacturer's published data for glazing material specified and recommended installation requirements.
   2. Product Data on Insulating Glass Unit and Glazing Unit Glazing Types: Provide structural, physical and environmental characteristics, size limitations, special handling and installation requirements.
   3. Product Data on Glazing Compounds and Accessories: Provide chemical, functional, and environmental characteristics, limitations, special application requirements, and identify available colors.

C. Shop Drawings
   1. Elevations.
   2. Submit shop drawings showing details of each type of glazing system indicating sizes, shapes, material and quantity. Show details indicating sealant thickness and profile, bite on glass, glass edge clearance, depth of rabbet and thickness of glass. Identify gasket materials, side spacer blocks, and setting blocks. Show weepage system in glass pockets. Details shall be full scale and fully drawn, not outlined.

D. Samples:
   1. Submit the following samples for review or testing:

a. Submit (4)samples of each type of glass specified. Minimum size of glass shall be 12" by 12” inches. All submittals shall identify thickness and type of glass (annealed, heat strengthened, or tempered) and the maximum design wind load it can accommodate based upon the maximum sizes required for that glass type.
b. Submit (4) - 12” long glazing gaskets, including molded corners.
c. Submit samples of setting blocks, spacers, edge blocks, tapes, rods, etc.
d. Before any glass is delivered to the job site, submit mock-up corner joinery sections and samples of glass installation into these framing members.

E. Glass Analysis
1. Submit calculations demonstrating the structural integrity of the glass in meeting the design load pressures which are specified in the respective glass framing systems. Calculations shall be performed by the glass manufacturer.
2. Submit wind and thermal stress analysis calculations by glass manufacturer including center deflection and probabilities of breakage.
3. Glass shall be designed using the probability of breakage of 8 lites per 1000 for vertically glazed areas, and one lite per 1000 for sloped glazed areas.
4. Where glass manufacturer cannot assure adequate structural performance of insulating glass units based upon combination of inner/outer lite, assume outer lite alone must satisfy structural requirements.
5. Provide certification from glass producer/fabricator that glass producer/fabricator has reviewed all glazing details, project conditions and thicknesses and compositions of all glass and finds same suitable for the purpose intended in accordance with these specifications.
6. Submit certification from manufacturer stating that insulated glass units meet standards specified herein.

F. Certificate: Certify that products of this section meet or exceed specified requirements.

G. Manufacturer's qualification statement.

H. Installer's qualification statement.

I. Warranty Documentation: Submit manufacturer warranty and ensure that forms have been completed in Owner's name and registered with manufacturer.

1.8 QUALITY ASSURANCE

A. Perform Work in accordance with GANA (GM), GANA (SM), GANA (LGRM), and IGMA TM-3000 for glazing installation methods. Maintain one copy on site.

B. The Contractor shall assume undivided responsibility for the glass and glazing and coordination with the components of related work. This firm must demonstrate not less than five years successful experience at work similar to the work of this project. Provide at least one person who shall be thoroughly trained and experienced in the skills required, who shall be completely familiar with the referenced standards and the requirements of this work, and who shall personally direct all installation performed under this Section of these specifications.

C. Each glass type is to match the approved samples, be uniform in appearance, free from irregularities and differences in appearance when viewed from exterior as judged by the Architect, Owner or their representatives. Glass not complying with this requirement to be replaced with conforming glass at no additional cost to the Owner.

D. Insulating-Glass Certification Program: Permanently marked either on spacers or on at least one component lite of units with appropriate certification label of the following testing and inspecting agency:
   1. Insulating Glass Certification Council.
   2. Associated Laboratories, Inc.

E. Safety Glazing Products: Comply with testing requirements in 16 CFR 1201 and, for wired glass, ANSI Z97.1.
   1. Subject to compliance with requirements, obtain safety glazing products permanently marked with certification label of the Safety Glazing Certification Council or another certification agency acceptable to authorities having jurisdiction.
   2. Lites more than 9 square feet (sf) (0.84 sq. m) in area are required to be Category II materials.
   3. Where glazing units, including Kind FT glass and laminated glass, are specified in Part 2 articles for glazing lites more than 9 sf in area, provide glazing products that comply with Category II materials, and for lites 9 sf. or less in area, provide glazing products that comply with Category I or II materials.

F. Code and Standard Compliance:
   1. Comply with all building, fire, and safety codes relating to the work, and the codes and standards cited herein. Provide certification that the glazing used conforms to the referenced standards.
   2. Use tempered glass for safety glazing unless shown otherwise. Safety glazing shall conform to the requirements of CPSC 16 CFR Part 1201 "Safety Standards for Architectural Glazing Materials" and ANSI Z97.1. Provide certification that the glazing used conforms to the referenced standards.
   3. Submit manufacturer's certified identification, showing strength, grade, thickness, type and quality for each type of glass used. Mark tempered, heat strengthened and laminated glass with permanent identification labels.

G. Labels: Each Individual Piece of Glass: Bear label designating type, thickness and quality. Do not remove labels until reviewed by Architect.

H. Manufacturer Qualifications: Company specializing in manufacturing the products specified in this section with minimum ten years of documented experience.
   1. Provide certified glass products through ANSI accredited certifications that include plant audits and independent laboratory performance testing.
      a. Insulating Glass Certification Council (IGCC).
      b. Safety Glazing Certification Council (SGCC).

I. Installer Qualifications: Company specializing in performing work of the type specified and with at least five years documented experience.
   1. Provide company, field supervisors, and installers that hold active ANSI accredited certifications in appropriate categories for work specified.
      a. North American Contractor Certification (NACC) for glazing contractors.
      b. Equivalent independent third-party ANSI accredited certification.

J. Testing Agency Qualifications: Independent firm specializing in performing testing and inspections of the type specified in this section.

1.9 DRAWINGS AND SPECIFICATIONS

A. The character of these requirements is intended to provide a performance type specification for the design, fabrication and installation of the glass and glazing. The Contractor is responsible for the engineering and design of all components and materials as well as the fabrication, installation and performance of the glass and glazing.

B. Drawings are diagrammatic. The details shown are intended as a guide for the aesthetic and interfacing requirements of the glass and glazing to and with other work. The requirements shown by the details are intended to establish basic dimensions, locations of glass panels and locations of different glass types. The Contractor is responsible for the design and engineering of the glass and glazing within these aesthetic parameters. The drawings are not to be construed as engineering design, or adequate to meet the engineering design requirements.

C. It is recognized that the design details do not cover some conditions or modifications, which may be required. It is, however, intended that conditions not detailed shall be developed through the Contractor's shop drawings to the same level of aesthetics and in compliance with performance criteria as indicated for detailed areas and as stipulated in these specifications. The Contractor, by accepting a contract for the work, acknowledges this and agrees that the Architect, Owner and their representatives have the final say as to all matters whether detailed or not on the design details.

D. If conflicts exist between this section of the specification and the glass framing specifications, the more stringent specification shall apply.

1.10 PROJECT CONDITIONS

A. Do not install glazing when ambient temperature is less than 40 degrees F.

B. Prior to beginning of installation, meet with the Architect, Owner and their representatives, Contractor and other trades affected by glass installation. Review all material selections, handling, storage, sealant work, glass pocket alignment tolerances, bedding of gaskets, protection, cleaning, and weather conditions under which glazing can be performed.

C. Do not perform work under adverse weather or job conditions, especially when it can cause frost or moisture condensation on framing.

D. Install liquid sealants when temperatures are within lower or middle third of temperature range recommended by manufacturer.

E. Field measure openings before ordering glass products. Be responsible for proper fit of field measured products.

F. Maintain minimum ambient temperature before, during and 24 hours after installation of glazing compounds.

1.11 DELIVERY, STORAGE AND HANDLING

A. Schedule delivery to coincide with glazing schedules so minimum handling of crates is required. Do not open crates excepts as required for inspection for shipping damage.

B. Deliver glass to site with manufacturer's labels showing thickness, quality and type, floor location, and/or other denotations that identify where glass is to be used.

C. Deliver glazing compound and other glazing items to site in manufacturer's original unopened packages or containers.

D. Remove from the job site and replace with acceptable material all cracked, broken, chipped or otherwise damaged glass, and all glazing and sealing materials unfit for use.

E. Store glass in dry, well-vented location at a temperature maintained above dew point. Minimize the handling of glass and protect from soiling, atmospheric condensation and other moisture.

F. All delivered items, whether F.O.B. job site for unloading and installation by others, or whether fabricated and installed by the Contractor shall be properly crated. Crates shall be marked with installation location and fabrication/piece numbers, shop drawing references, etc. as applicable.

1.12 WARRANTY

A. See Section 017836 - Warranties and Bonds for additional warranty requirements.

B. Special Warranty
   1. The manufacturer of the insulated glass shall warrant and guarantee direct to the Owner each insulating glass unit installed to be free from material obstructions of vision as a result of dust or film formation on the internal glass surfaces caused by failure of the hermetic seal other than glass breakage, and that spacer bars shall not "walk up" into the cavity between the glass lites, for a period of ten years.
   2. The manufacturer of units with coated glass shall warrant and guarantee direct to the Owner each unit be free from discoloration, mottling or deteriorating of the coating regardless of loss of insulating glass seal, for a period of ten years.
   3. The manufacturer of the laminated glass shall warrant and guarantee direct to the Owner each unit installed to be free from delamination or other defects for a period of ten years.
   4. The Contractor shall guarantee glazing occurring on the building to be weather and watertight for a period of five years after date of Substantial Completion.
   5. All warranties shall agree to replace the glass F.O.B. project site, including labor, at no cost to the Owner, provided the manufacturer’s instructions for protection and maintenance have been adhered to during the warranty period and failure is not due to vandalism or glass breakage caused by external projectiles.

C. Insulating Glass Units: Provide a five (5) year manufacturer warranty to include coverage for seal failure, interpane dusting or misting, including providing products to replace failed units.

PART 2 PRODUCTS

2.1 MANUFACTURERS

A. Float Glass Manufacturers:
   1. Cardinal Glass Industries: www.cardinalcorp.com/#sle.
   2. Guardian Glass, LLC: www.guardianglass.com/#sle.
   3. Pilkington North America Inc: www.pilkington.com/na/#sle.
   4. Vitro Architectural Glass (formerly PPG Glass): www.vitroglazings.com/#sle.
   5. Or Equal.

2.2 PERFORMANCE REQUIREMENTS - EXTERIOR GLAZING ASSEMBLIES

A. Provide type and thickness of exterior glazing assemblies to support assembly dead loads, and to withstand live loads caused by positive and negative wind pressure acting normal to plane of glass.
   1. Design Pressure: Calculated in accordance with ASCE 7.
   2. Comply with ASTM E1300 for design load resistance of glass type, thickness, dimensions, and maximum lateral deflection of supported glass.
   3. Seismic Loads: Design and size glazing components to withstand seismic loads and sway displacement in accordance with the requirements of ASCE 7.
   4. Provide glass edge support system sufficiently stiff to limit the lateral deflection of supported glass edges to less than 1/175 of their lengths under specified design load.
   5. Glass thicknesses listed are minimum.

B. Thermal and Optical Performance: Provide exterior glazing products with performance properties as indicated. Performance properties are in accordance with manufacturer's published data as determined with the following procedures and/or test methods:
   1. Center of Glass U-Value: Comply with NFRC 100 using Lawrence Berkeley National Laboratory (LBNL) WINDOW 6.3 computer program.
   2. Center of Glass Solar Heat Gain Coefficient (SHGC): Comply with NFRC 200 using Lawrence Berkeley National Laboratory (LBNL) WINDOW 6.3 computer program.
   3. Solar Optical Properties: Comply with NFRC 300 test method.

2.3 GLASS MATERIALS

A. Float Glass: Provide float glass based glazing unless otherwise indicated.
   1. Annealed Type: ASTM C1036, Type I - Transparent Flat, Class 1 - Clear, Quality - Q3.
   2. Kind HS - Heat-Strengthened Type: Complies with ASTM C1048.
   3. Kind FT - Fully Tempered Type: Complies with ASTM C1048.
   4. Fully Tempered Safety Glass: Complies with ANSI Z97.1 or 16 CFR 1201 criteria for safety glazing used in hazardous locations.
   5. Thicknesses: As indicated; provide greater thickness as required for exterior glazing wind load design.

B. Low E Coating: Equal to Guardian “SunGuard” Low E Coating System SNR35.
   1. Basis of Design: "SunGuard" SNR 35 with IS 20 Coating on #2 Surface (where indicated in Glass Types).
   2. Visible Light
      a. Transmittance: 33 %
      b. Reflectance outside: 35 %
      c. Reflectance inside: 19 %
      d. General Color Rendering Index (CRI): 89.8
   3. Ultraviolet
      a. Transmittance UV: 11 %
   4. Solar Energy
      a. Solar transmittance: 13 %
      b. Reflectance outside: 47 %
      c. Reflectance inside: 44 %
      d. Solar absorptance: 39 %

e. Solar Heat Gain Coefficient (SHGC): 0.17
f. Shading Coefficient: 0.20

5. Thermal Properties
   a. Winter night U-Value: 0.289 Btu/hr·ft²·F
   b. Summer day U-value: 0.270 Btu/hr·ft²·F
6. Light to Solar Gain
   a. Light to Solar Gain (LSG): 1.92

C. Laminated Glass: Float glass laminated in accordance with ASTM C1172.
   1. Laminated Safety Glass: Complies with ANSI Z97.1 - Class A or 16 CFR 1201 - Category I impact test requirements.
   2. Polyvinyl Butyral (PVB) Interlayer: 0.030 inch thick, minimum.

2.4 INSULATING GLASS UNITS

A. Manufacturers:
   1. Cardinal Glass Industries: www.cardinalcorp.com/#sle.
   2. Basis of Design - Guardian Glass, LLC: www.guardianglass.com/#sle.
   3. Vitro Architectural Glass (formerly PPG Glass): www.vitroglazings.com/#sle.
   4. Or Equal.

B. Fabricator: Certified by glass manufacturer for type of glass, coating, and treatment involved and capable of providing specified warranty.

C. Insulating Glass Units: Types as indicated.
   1. Durability: Certified by an independent testing agency to comply with ASTM E2190.
   2. Coated Glass: Comply with requirements of ASTM C1376 for pyrolytic (hard-coat) or magnetic sputter vapor deposition (soft-coat) type coatings on flat glass; coated vision glass, Kind CV; coated overhead glass, Kind CO; or coated spandrel glass, Kind CS.
   3. Metal-Edge Spacers: Aluminum, bent and soldered corners.
   4. Spacer Color: Black.
   5. Edge Seal:
      a. Dual-Sealed System: Provide polyisobutylene sealant as primary seal applied between spacer and glass panes, and silicone, polysulfide, or polyurethane sealant as secondary seal applied around perimeter.
      b. Color: Black.
   6. Purge interpane space with dry air, hermetically sealed.
   7. Breather Tubes: Provide tubes from air space for insulating glass units without inert type gas that have a change of altitude greater than 2500 feet between point of fabrication and point of installation to permit pressure equalization of air space.
      a. Breather Tubes: Seal or crimp breather tubes upon installation in accordance with insulating glass fabricator's requirements.

2.5 GLASS TYPES

A. Glass Type G1: Exterior 1" Low-E Insulated Tempered Safety Glazing (SNR35 + IS20)
   1. 1/4” Fully Tempered clear float glass with Low-E Coating: SunGuard SNR 35 on #2 surface
   2. 1/2” air space
   3. 1/4” Fully Tempered clear glass, SunGuard IS 20 on #4 surface.

B. Glass Type G2: Interior 1/4" Fully Tempered Safety Glazing.

2.6 GLAZING COMPOUNDS

A. Type GC-1 - Glazing Putty: Polymer modified latex recommended by manufacturer for outdoor use, knife grade consistency; gray color.

B. Type GC-5 - Silicone Sealant: Single component; neutral curing; capable of water immersion without loss of properties; nonbleeding, nonstaining; ASTM C920, Type S, Grade NS, Class 25, Uses M, A, and G; with cured Shore A hardness range of 15 to 25; color as selected.

C. Manufacturers:
   1. Dow Corning Corporation; _____: www.dowcorning.com/construction/#sle.
   2. Momentive Performance Materials, Inc: www.momentive.com/#sle.
   3. Pecora Corporation: www.pecora.com/#sle.
   4. Or Equal

2.7 ACCESSORIES

A. Setting Blocks: Silicone, with 80 to 90 Shore A durometer hardness; ASTM C864 Option II. Length of 0.1 inch for each square foot of glazing or minimum 4 inch by width of glazing rabbet space minus 1/16 inch by height to suit glazing method and pane weight and area.

B. Glazing Tape, Back Bedding Mastic Type: Preformed, butyl-based, 100 percent solids compound with integral resilient spacer rod applicable to application indicated; 5 to 30 cured Shore A durometer hardness; coiled on release paper; black color.

C. Glazing Splines: Resilient silicone extruded shape to suit glazing channel retaining slot; ASTM C864 Option II; color black.

D. Glazing Clips: Manufacturer's standard type.

2.8 SOURCE QUALITY CONTROL

A. See Section 014000 - Quality Requirements for additional requirements.

PART 3 EXECUTION

3.1 VERIFICATION OF CONDITIONS

A. Verify that openings for glazing are correctly sized and within tolerances, including those for size, squareness, and offsets at corners.

B. Verify that the minimum required face and edge clearances are being provided.

C. Verify that surfaces of glazing channels or recesses are clean, free of obstructions that may impede moisture movement, weeps are clear, and support framing is ready to receive glazing system.

D. Verify that sealing between joints of glass framing members has been completed effectively.

E. Proceed with glazing system installation only after unsatisfactory conditions have been corrected.

3.2 PREPARATION

A. Clean contact surfaces with appropriate solvent and wipe dry within maximum of 24 hours before glazing. Remove coatings that are not tightly bonded to substrates.

B. Seal porous glazing channels or recesses with substrate compatible primer or sealer.

C. Prime surfaces scheduled to receive sealant where required for proper sealant adhesion.

3.3 INSTALLATION, GENERAL

A. Install glazing in compliance with written instructions of glass, gaskets, and other glazing material manufacturers, unless more stringent requirements are indicated, including those in glazing referenced standards.

B. Install glazing sealants in accordance with ASTM C1193, GANA (SM), and manufacturer's instructions.

C. Do not exceed edge pressures around perimeter of glass lites as stipulated by glass manufacturer.

D. Set glass lites of system with uniform pattern, draw, bow, and similar characteristics.

E. Set glass lites in proper orientation so that coatings face exterior or interior as indicated.

F. Prevent glass from contact with any contaminating substances that may be the result of construction operations such as, and not limited to the following; weld splatter, fire-safing, plastering, mortar droppings, etc.

3.4 INSTALLATION - DRY GLAZING METHOD (GASKET GLAZING)

A. Application - Exterior and/or Interior Glazed: Set glazing infills from either the exterior or the interior of the building.

B. Place setting blocks at 1/4 points with edge block no more than 6 inch from corners.

C. Rest glazing on setting blocks and push against fixed stop with sufficient pressure on gasket to attain full contact.

D. Install removable stops without displacing glazing gasket; exert pressure for full continuous contact.

3.5 INSTALLATION - DRY GLAZING METHOD (TAPE AND GASKET SPLINE GLAZING)

A. Application - Exterior Glazed: Set glazing infills from the exterior of the building.

B. Cut glazing tape to length; install on glazing pane. Seal corners by butting tape and sealing junctions with butyl sealant.

C. Place setting blocks at 1/4 points with edge block no more than 6 inch from corners.

D. Rest glazing on setting blocks and push against fixed stop with sufficient pressure to attain full contact.

E. Install removable stops without displacing glazing spline. Exert pressure for full continuous contact.

F. Carefully trim protruding tape with knife.

3.6 INSTALLATION - DRY GLAZING METHOD (TAPE AND TAPE)

A. Application - Interior Glazed: Set glazing infills from the interior of the building.

B. Cut glazing tape to length and set against permanent stops, projecting 1/16 inch above sight line.

C. Place setting blocks at 1/4 points with edge block no more than 6 inch from corners.

D. Rest glazing on setting blocks and push against tape for full contact at perimeter of pane or unit.

E. Place glazing tape on free perimeter of glazing in same manner described above.

F. Install removable stop without displacement of tape. Exert pressure on tape for full continuous contact.

G. Carefully trim protruding tape with knife.

3.7 INSTALLATION - WET GLAZING METHOD (SEALANT AND SEALANT)

A. Application - Exterior Glazed: Set glazing infills from the exterior of the building.

B. Place setting blocks at 1/4 points and install glazing pane or unit.

C. Install removable stops with glazing centered in space by inserting spacer shims both sides at 24 inch intervals, 1/4 inch below sight line.

D. Fill gaps between glazing and stops with sealant to depth of bite on glazing, but not more than 3/8 inch below sight line to ensure full contact with glazing and continue the air and vapor seal.

E. Apply sealant to uniform line, flush with sight line. Tool or wipe sealant surface smooth.

3.8 INSTALLATION - WET GLAZING METHOD (COMPOUND AND COMPOUND)

A. Application - Interior Glazed: Set glazing infills from the interior of the building.

B. Install glazing resting on setting blocks. Install applied stop and center pane by use of spacer shims at 24 inch centers, kept 1/4 inch below sight line.

C. Locate and secure glazing pane using glazers' clips.

D. Fill gaps between glazing and stops with glazing compound until flush with sight line. Tool surface to straight line.

3.9 INSTALLATION - WET/DRY GLAZING METHOD (PREFORMED TAPE AND SEALANT)

A. Application - Exterior Glazed: Set glazing infills from the exterior of the building.

B. Cut glazing tape to length and set against permanent stops, 3/16 inch below sight line. Seal corners by butting tape and dabbing with butyl sealant.

C. Apply heel bead of butyl sealant along intersection of permanent stop with frame ensuring full perimeter seal between glass and frame to complete the continuity of the air and vapor seal.

D. Place setting blocks at 1/4 points with edge block no more than 6 inch from corners.

E. Rest glazing on setting blocks and push against tape and heel bead of sealant with sufficient pressure to attain full contact at perimeter of pane or glass unit.

F. Install removable stops, with spacer strips inserted between glazing and applied stops 1/4 inch below sight lines.
   1. Place glazing tape on glazing pane of unit with tape flush with sight line.

G. Fill gap between glazing and stop with sealant to depth equal to bite of frame on glazing, but not more than 3/8 inch below sight line.

H. Apply cap bead of sealant along void between the stop and the glazing, to uniform line, flush with sight line. Tool or wipe sealant surface smooth.

3.10 INSTALLATION - WET/DRY GLAZING METHOD (TAPE AND SEALANT)

A. Application - Interior Glazed: Set glazing infills from the interior of the building.

B. Cut glazing tape to length and install against permanent stops, projecting 1/16 inch above sight line.

C. Place setting blocks at 1/4 points with edge block no more than 6 inch from corners.

D. Rest glazing on setting blocks and push against tape to ensure full contact at perimeter of pane or unit.

E. Install removable stops, spacer shims inserted between glazing and applied stops at 24 inch intervals, 1/4 inch below sight line.

F. Fill gaps between pane and applied stop with _____ type sealant to depth equal to bite on glazing, to uniform and level line.

G. Carefully trim protruding tape with knife.

3.11 INSTALLATION - BUTT JOINT GLAZING METHOD (SEALANT ONLY)

A. Application - Exterior Glazed: Set glazing infills from exterior side of building.

B. Temporarily brace glass in position for duration of glazing process; mask edges of glass at adjoining glass edges and between glass edges and framing members.

C. Temporarily secure a small diameter nonadhering foamed rod on back side of joint.

D. Apply sealant to open side of joint in continuous operation; thoroughly fill joint without displacing foam rod, and then tool sealant surface smooth to concave profile.

E. Permit sealant to cure then remove foam backer rod, and then apply sealant to opposite side, tool smooth to concave profile.

F. Remove masking tape.

3.12 FIELD QUALITY CONTROL

A. See Section 014000 - Quality Requirements for additional requirements.

B. Glass and Glazing product manufacturers to provide field surveillance of the installation of their products.

C. Monitor and report installation procedures and unacceptable conditions.

3.13 CLEANING

A. Remove excess glazing materials from finish surfaces immediately after application using solvents or cleaners recommended by manufacturers.

B. Remove nonpermanent labels immediately after glazing installation is complete.

C. Clean glass and adjacent surfaces after sealants are fully cured.

D. Clean glass on both exposed surfaces not more than 4 days prior to Date of Substantial Completion in accordance with glass manufacturer's written recommendations.

3.14 PROTECTION

A. After installation, mark pane with an 'X' by using removable plastic tape or paste; do not mark heat absorbing or reflective glass units.

B. Remove and replace glass that is damaged during construction period prior to Date of Substantial Completion.

END OF SECTION

SECTION 090561 - COMMON WORK RESULTS FOR FLOORING PREPARATION

PART 1 GENERAL

1.1 SECTION INCLUDES

A. This section applies to floors identified in Contract Documents that are receiving the following types of floor coverings:
   1. Resilient tile and sheet.
   2. Carpet tile.

B. Preparation of new concrete floor slabs for installation of floor coverings.

C. Testing of concrete floor slabs for moisture and alkalinity (pH).

1.2 RELATED REQUIREMENTS

1.3 REFERENCE STANDARDS

A. ASTM F1869 - Standard Test Method for Measuring Moisture Vapor Emission Rate of Concrete Subfloor Using Anhydrous Calcium Chloride; 2016a.

B. ASTM F2170 - Standard Test Method for Determining Relative Humidity in Concrete Floor Slabs Using in situ Probes; 2019a.

1.4 ADMINISTRATIVE REQUIREMENTS

A. Coordinate scheduling of cleaning and testing, so that preliminary cleaning has been completed for at least 24 hours prior to testing.

1.5 SUBMITTALS

A. See Section 013000 - Administrative Requirements for submittal procedures.

B. Floor Covering and Adhesive Manufacturers' Product Literature: For each specific combination of substrate, floor covering, and adhesive to be used; showing:
   1. Moisture and alkalinity (pH) limits and test methods.
   2. Manufacturer's required bond/compatibility test procedure.

C. Testing Agency's Report:
   1. Description of areas tested; include floor plans and photographs if helpful.
   2. Summary of conditions encountered.
   3. Moisture and alkalinity (pH) test reports.
   4. Copies of specified test methods.
   5. Recommendations for remediation of unsatisfactory surfaces.
   6. Submit report to Architect.
   7. Submit report not more than two business days after conclusion of testing.

D. Adhesive Bond and Compatibility Test Report.

1.6 QUALITY ASSURANCE

A. Moisture and alkalinity (pH) testing shall be performed by an independent testing agency employed and paid by Contractor.

B. Testing Agency Qualifications: Independent testing agency experienced in the types of testing specified.
   1. Submit evidence of experience consisting of at least 3 test reports of the type required, with project Owner's project contact information.

C. Contractor's Responsibility Relating to Independent Agency Testing:
   1. Provide access for and cooperate with testing agency.
   2. Confirm date of start of testing at least 10 days prior to actual start.
   3. Allow at least 4 business days on site for testing agency activities.
   4. Achieve and maintain specified ambient conditions.
   5. Notify Architect when specified ambient conditions have been achieved and when testing will start.

1.7 DELIVERY, STORAGE, AND HANDLING

A. Deliver, store, handle, and protect products in accordance with manufacturer's instructions and recommendations.

B. Deliver materials in manufacturer's packaging; include installation instructions.

C. Keep materials from freezing.

1.8 FIELD CONDITIONS

A. Maintain ambient temperature in spaces where concrete testing is being performed, and for at least 48 hours prior to testing, at not less than 65 degrees F or more than 85 degrees F.

B. Maintain relative humidity in spaces where concrete testing is being performed, and for at least 48 hours prior to testing, at not less than 40 percent and not more than 60 percent.

PART 2 PRODUCTS

PART 3 EXECUTION

3.1 CONCRETE SLAB PREPARATION

A. Follow recommendations of testing agency.

B. Perform following operations in the order indicated:
   1. Preliminary cleaning.
   2. Moisture vapor emission tests; 3 tests in the first 1000 square feet and one test in each additional 1000 square feet, unless otherwise indicated or required by flooring manufacturer.
   3. Internal relative humidity tests; in same locations as moisture vapor emission tests, unless otherwise indicated.
   4. Alkalinity (pH) tests; in same locations as moisture vapor emission tests, unless otherwise indicated.
   5. Specified remediation, if required.
   6. Patching, smoothing, and leveling, as required.
   7. Other preparation specified.
   8. Adhesive bond and compatibility test.

9. Protection.

3.2 PRELIMINARY CLEANING

A. Clean floors of dust, solvents, paint, wax, oil, grease, asphalt, residual adhesive, adhesive removers, film-forming curing compounds, sealing compounds, alkaline salts, excessive laitance, mold, mildew, and other materials that might prevent adhesive bond.

B. Do not use solvents or other chemicals for cleaning.

3.3 MOISTURE VAPOR EMISSION TESTING

A. Where the floor covering manufacturer's requirements conflict with either the referenced test method or this specification, comply with the manufacturer's requirements.

B. Where this specification conflicts with the referenced test method, comply with the requirements of this section.

C. Test in accordance with ASTM F1869 and as follows.

D. Plastic sheet test and mat bond test may not be substituted for the specified ASTM test method, as those methods do not quantify the moisture content sufficiently.

E. In the event that test values exceed floor covering manufacturer's limits, perform remediation as indicated. In the absence of manufacturer limits, perform remediation if test values exceed 3 pounds per 1000 square feet per 24 hours.

F. Report: Report the information required by the test method.

3.4 INTERNAL RELATIVE HUMIDITY TESTING

A. Where the floor covering manufacturer's requirements conflict with either the referenced test method or this specification, comply with the manufacturer's requirements.

B. Where this specification conflicts with the referenced test method, comply with the requirements of this section.

C. Test in accordance with ASTM F2170 Procedure A and as follows.

D. Testing with electrical impedance or resistance apparatus may not be substituted for the specified ASTM test method, as the values determined are not comparable to the ASTM test values and do not quantify the moisture content sufficiently.

E. In the event that test values exceed floor covering manufacturer's limits, perform remediation as indicated. In the absence of manufacturer limits, perform remediation if any test value exceeds 75 percent relative humidity.

F. Report: Report the information required by the test method.

3.5 ALKALINITY TESTING

A. Where the floor covering manufacturer's requirements conflict with either the referenced test method or this specification, comply with the manufacturer's requirements.

B. In the event that test values exceed floor covering manufacturer's limits, perform remediation as indicated. In the absence of manufacturer limits, perform remediation if alkalinity (pH) test value is over 10.

3.6 PREPARATION

A. See individual floor covering section(s) for additional requirements.

B. Comply with requirements and recommendations of floor covering manufacturer.

C. Fill and smooth surface cracks, grooves, depressions, control joints and other non-moving joints, and other irregularities with patching compound.

D. Do not fill expansion joints, isolation joints, or other moving joints.

3.7 ADHESIVE BOND AND COMPATIBILITY TESTING

A. Comply with requirements and recommendations of floor covering manufacturer.

3.8 PROTECTION

A. Cover prepared floors with building paper or other durable covering.

END OF SECTION

SECTION 092116 - GYPSUM BOARD ASSEMBLIES

PART 1 GENERAL

1.1 SECTION INCLUDES

A. Performance criteria for gypsum board assemblies.

B. Exterior gypsum sheathing.

C. Tile backing board.

D. Gypsum wallboard.

E. Joint treatment and accessories.

1.2 RELATED REQUIREMENTS

A. Section 061000 - Rough Carpentry: Building framing and sheathing.

B. Section 061000 - Rough Carpentry: Wood blocking product and execution requirements.

C. Section 072100 - Building Insulation: Acoustic insulation.

D. Section 072500 - Weather Barriers: Water-resistive barrier over sheathing.

E. Section 078400 - Firestopping: Top-of-wall assemblies at fire rated walls.

F. Section 079200 - Joint Sealants: Sealing acoustical gaps in construction other than gypsum board or plaster work.

1.3 REFERENCE STANDARDS

A. ANSI A108.11 - American National Standard Specifications for Interior Installation of Cementitious Backer Units; 2018.

B. ANSI A118.9 - American National Standard Specifications for Test Methods and Specifications for Cementitious Backer Units; 2019.

C. ASTM C475/C475M - Standard Specification for Joint Compound and Joint Tape for Finishing Gypsum Board; 2017.

D. ASTM C514 - Standard Specification for Nails for the Application of Gypsum Board; 2004 (Reapproved 2020).

E. ASTM C754 - Standard Specification for Installation of Steel Framing Members to Receive Screw-Attached Gypsum Panel Products; 2020.

F. ASTM C834 - Standard Specification for Latex Sealants; 2017.

G. ASTM C840 - Standard Specification for Application and Finishing of Gypsum Board; 2020.

H. ASTM C954 - Standard Specification for Steel Drill Screws for the Application of Gypsum Panel Products or Metal Plaster Bases to Steel Studs From 0.033 in. (0.84 mm) to 0.112 in. (2.84 mm) in Thickness; 2018.

I. ASTM C1002 - Standard Specification for Steel Self-Piercing Tapping Screws for Application of Gypsum Panel Products or Metal Plaster Bases to Wood Studs or Steel Studs; 2020.

J. ASTM C1047 - Standard Specification for Accessories for Gypsum Wallboard and Gypsum Veneer Base; 2019.

K. ASTM C1177/C1177M - Standard Specification for Glass Mat Gypsum Substrate for Use as Sheathing; 2017.

L. ASTM C1178/C1178M - Standard Specification for Coated Glass Mat Water-Resistant Gypsum Backing Panel; 2018.

M. ASTM C1278/C1278M - Standard Specification for Fiber-Reinforced Gypsum Panel; 2017.

N. ASTM C1280 - Standard Specification for Application of Exterior Gypsum Panel Products for Use as Sheathing; 2018.

O. ASTM C1325 - Standard Specification for Fiber-Mat Reinforced Cementitious Backer Units; 2021.

P. ASTM C1396/C1396M - Standard Specification for Gypsum Board; 2017.

Q. ASTM C1629/C1629M - Standard Classification for Abuse-Resistant Nondecorated Interior Gypsum Panel Products and Fiber-Reinforced Cement Panels; 2019.

R. ASTM C1658/C1658M - Standard Specification for Glass Mat Gypsum Panels; 2019, with Editorial Revision (2020).

S. ASTM D3273 - Standard Test Method for Resistance to Growth of Mold on the Surface of Interior Coatings in an Environmental Chamber; 2021.

T. ASTM D6329 - Standard Guide for Developing Methodology for Evaluating the Ability of Indoor Materials to Support Microbial Growth Using Static Environmental Chambers; 1998 (Reapproved 2015).

U. ASTM E84 - Standard Test Method for Surface Burning Characteristics of Building Materials; 2021a.

V. ASTM E90 - Standard Test Method for Laboratory Measurement of Airborne Sound Transmission Loss of Building Partitions and Elements; 2009 (Reapproved 2016).

W. ASTM E119 - Standard Test Methods for Fire Tests of Building Construction and Materials; 2020.

X. ASTM E413 - Classification for Rating Sound Insulation; 2016.

Y. ASTM E1264 - Standard Classification for Acoustical Ceiling Products; 2019.

Z. ASTM G21 - Standard Practice for Determining Resistance of Synthetic Polymeric Materials to Fungi; 2015, with Editorial Revision (2021).

AA. GA-214 - Levels of Finish for Gypsum Panel Products; 2021.

AB. GA-216 - Application and Finishing of Gypsum Panel Products; 2016, with Errata.

AC. GA-226 - Application of Gypsum Board to Form Curved Surfaces; 2008.

AD. GA-600 - Fire Resistance Design Manual Sound Control; 2021.

AE. ICC (IBC) - International Building Code; Most Recent Edition Adopted by Authority Having Jurisdiction, Including All Applicable Amendments and Supplements.

AF. UL (FRD) - Fire Resistance Directory; Current Edition.

1.4 SUBMITTALS

A. See Section 013000 - Administrative Requirements for submittal procedures.

B. Shop Drawings: Indicate special details associated with fireproofing and acoustic seals.

C. Product Data: Provide data on gypsum board, glass mat faced gypsum board, accessories, and joint finishing system.

D. Product Data: Provide manufacturer's data on partition head to structure connectors, showing compliance with requirements.

E. Test Reports: For stud framing products that do not comply with ASTM C645 or ASTM C754, provide independent laboratory reports showing maximum stud heights at required spacings and deflections.

1.5 QUALITY ASSURANCE

A. Manufacturer Qualifications: Company specializing in manufacturing products specified in this section, with not less than 25 years of documented experience.

B. Installer Qualifications: Company specializing in performing, with minimum 5 years of documented experience and approved by manufacturer.

C. Regulatory Requirements: Comply with the applicable codes relating to the fire rated assemblies as shown on the drawings.

D. Copies of Documents at Site: Maintain at the project site a copy of each referenced document that prescribes execution requirements.

1.6 MOCK-UP

A. Provide a jobsite mock-up shall serve as a benchmark for the purpose of acceptance of the related widespread work for all appearance areas finished to a Level 3, 4, or 5. A completed mock-up will be the visual project standard that will enable the design professional, contractors and building owners to agree upon the final appearance prior to beginning any widespread finish work.

1.7 DELIVERY, STORAGE AND HANDLING

A. Comply with GA-216 and Manufacturer's instructions.

1.8 SCHEDULING

A. Provide schedule that will allow products to be installed per the manufacturer's requirements. Specifically for Exterior Gypsum Sheathing; sheathing will not be left exposed longer than 180 days prior to the weather barrier or cladding being installed.

1.9 WARRANTY

A. See Section 017836 - Warranties and Bonds for additional warranty requirements.

B. Special Warranty

1. Exterior Gypsum Sheathing: Provide manufacturer's limited warranty for 10 years covering defects in the manufacturing and in the materials.
2. Include warranty coverage for a minimum of 6 months exposure; clearly state that the product will remain free of defects and suitable for its intended use after installation and before the exterior weather barrier or cladding is installed.

PART 2 PRODUCTS

2.1 GYPSUM BOARD ASSEMBLIES

A. Provide completed assemblies complying with ASTM C840 and GA-216.
   1. See PART 3 for finishing requirements.

B. Interior Partitions, Indicated as Acoustic: Provide completed assemblies with the following characteristics:
   1. Acoustic Attenuation: STC of 45-62 calculated in accordance with ASTM E413, based on tests conducted in accordance with ASTM E90.

C. Fire-Resistance-Rated Assemblies: Provide completed assemblies with the following characteristics:
   1. ICC IBC Item Numbers: Comply with applicable requirements of ICC IBC for the particular assembly.
   2. Gypsum Association File Numbers: Comply with requirements of GA-600 for the particular assembly.
   3. UL Assembly Numbers: Provide construction equivalent to that listed for the particular assembly in the current UL (FRD).

2.2 MANUFACTURERS

A. Basis of Design: Contract Documents are based on products specified below to establish a standard of quality. Other acceptable manufacturers with products having equivalent characteristics may be considered, provided deviations are minor and design concept expressed in Contract Documents is not changed, as determined by the Architect.
   1. Georgia-Pacific Gypsum: www.gpgypsum.com.

B. Acceptable Manufacturers: Subject to compliance with requirements of Contract Documents, provide product by one of manufacturers listed alphabetically below. If not listed. submit as substitution according to Conditions of the Contract and Division 1 Sections.
   1. Manufacturers - Gypsum-Based Board:
      a. CertainTeed Corporation: www.certainteed.com/#sle.
      b. National Gypsum Company: www.nationalgypsum.com/#sle.
      c. USG Corporation: www.usg.com/#sle.

C. Substitutions: Refer to Section 012500 - Substitution Procedures.

2.3 MATERIALS

A. Gypsum Wallboard:
   1. Application: Use for vertical surfaces and ceilings, unless otherwise indicated.
   2. Glass mat faced gypsum panels, as defined in ASTM C1658/C1658M, suitable for paint finish, of the same core type and thickness may be substituted for paper-faced board.
   3. Mold Resistance: Score of 10, when tested in accordance with ASTM D3273.

a. Mold-resistant board is required whenever board is being installed before the building is enclosed and conditioned.
b. Mold resistant board is required at all locations.

4. At Assemblies Indicated with Fire-Resistance Rating: Use type required by indicated tested assembly; if no tested assembly is indicated, use Type X board, UL or WH listed.
5. Thickness:
   a. Vertical Surfaces: 5/8 inch.
   b. Ceilings: 5/8 inch.
   c. Multi-Layer Assemblies: Thicknesses as indicated on drawings.
6. Mold Resistant Paper Faced Products:
   a. Georgia-Pacific Gypsum; ToughRock Mold-Guard: www.gpgypsum.com/#sle.
7. Glass Mat Faced Products:
   a. Georgia-Pacific Gypsum; DensArmor Plus: www.gpgypsum.com/#sle.
   b. Georgia-Pacific Gypsum; DensArmor Plus Fireguard C: www.gpgypsum.com/#sle.

B. Abuse Resistant Wallboard:
1. Application: High-traffic areas indicated.
2. Surface Abrasion: Level 2, minimum, when tested in accordance with ASTM C1629/C1629M.
3. Indentation: Level 1, minimum, when tested in accordance with ASTM C1629/C1629M.
4. Soft Body Impact: Level 1, minimum, when tested in accordance with ASTM C1629/C1629M.
5. Mold Resistance: Score of 10, when tested in accordance with ASTM D3273.
6. Glass Mat-Faced Type: Gypsum wallboard, as defined in ASTM C1658/C1658M.
7. Type: Fire-resistance-rated Type X, UL or WH listed.
8. Thickness: 5/8 inch.
9. Edges: Tapered.

C. Backing Board For Wet Areas:
1. Application: Surfaces behind tile and FRL/FRP in wet areas including drinking fountains.
2. Mold Resistance: Score of 10, when tested in accordance with ASTM D3273.
3. ANSI Cement-Based Board: Non-gypsum-based; aggregated Portland cement panels with glass fiber mesh embedded in front and back surfaces complying with ANSI A118.9 or ASTM C1325.
   a. Thickness: 1/2 inch.
   b. Products:
      1) USG Corporation; Fiberock Brand Aqua-Tough AR Interior Panels Regular 5/8 in. (15.9 mm): www.usg.com/#sle.
      2) National Gypsum Company; PermaBase Flex Brand Cement Board.
4. ASTM Cement-Based Board: Non-gypsum-based, cementitious board complying with ASTM C1288.
   a. Thickness: 5/8 inch.
   b. Products:
      1) James Hardie Building Products, Inc: www.jameshardie.com/#sle.
      2) National Gypsum Company, Permabase Cement Board: www.nationalgypsum.com.
      3) USG Corporation; DUROCK Cement Board: www.usg.com.
5. Glass Mat Faced Board: Coated glass mat water-resistant gypsum backing panel as defined in ASTM C1178/C1178M.
   a. Standard Type: Thickness 1/4 or 5/8 inch.

b. Fire-Resistance-Rated Type: Type X core, thickness 5/8 inch.
c. Products:
1) Georgia-Pacific Gypsum; DensShield Tile Backer: www.gpgypsum.com/#sle.

D. Backing Board For Non-Wet Areas: Water-resistant gypsum backing board as defined in ASTM C1396/C1396M; sizes to minimum joints in place; ends square cut.
1. Application: Vertical surfaces behind thinset tile, except in wet areas.
2. Mold Resistance: Score of 10, when tested in accordance with ASTM D3273.
3. At Assemblies Indicated with Fire-Resistance Rating: Use type required by indicated tested assembly; if no tested assembly is indicated, use Type X board, UL or WH listed.
4. Type: Regular and Type X, in locations indicated.
5. Type X Thickness: 5/8 inch.
6. Regular Board Thickness: 5/8 inch.
7. Edges: Tapered.
8. Products:
a. Georgia-Pacific Gypsum; DensShield Tile Backer.

E. Ceiling Board: Special sag resistant gypsum ceiling board as defined in ASTM C1396/C1396M; sizes to minimize joints in place; ends square cut.
1. Application: Ceilings, unless otherwise indicated.
2. Thickness: 5/8 inch.
3. Edges: Tapered.
4. Products:
a. Georgia-Pacific Gypsum; ToughRock Span 24 Ceiling Board: www.gpgypsum.com/#sle.

F. Exterior Sheathing Board: Sizes to minimize joints in place; ends square cut.
1. Application: Exterior sheathing, unless otherwise indicated.
2. Mold Resistance: Score of 10, when tested in accordance with ASTM D3273.
3. Glass Mat Faced Sheathing: Glass mat faced gypsum substrate as defined in ASTM C1177/C1177M.
4. At Assemblies Indicated with Fire-Resistance Rating: Use type required by indicated tested assembly; if no tested assembly is indicated, use Type X board, UL or WH listed.
5. Core Type: Regular and Type X, as indicated.
6. Type X Thickness: 5/8 inch.
7. Regular Board Thickness: 5/8 inch.
8. Edges: Square.
9. Glass Mat Faced Products:
a. Georgia-Pacific Gypsum; DensGlass Sheathing: www.gpgypsum.com/#sle.

2.4 GYPSUM BOARD ACCESSORIES

A. Acoustic Insulation: See Section 072100.

B. Acoustic Sealant: Refer to Section 079200 - Joint Sealants.

C. Water-Resistive Barrier: See Section 072500.

D. Finishing Accessories: ASTM C1047, extruded aluminum alloy (6063 T5) or galvanized steel sheet ASTM A924/A924M G90, unless noted otherwise.
1. Types: As detailed or required for finished appearance.

2. Special Shapes: In addition to conventional corner bead and control joints, provide U-bead at exposed panel edges.
3. Products:
   a. Same manufacturer as framing materials.
   b. Phillips Manufacturing Co: www.phillipsmfg.com/#sle.
   c. U.S. Gypsum.

E. Moisture Guard Trim: ASTM C1047, rigid plastic, 48 inch length, applied to bottom edge of gypsum board.
1. Height: 1/2 inch.
2. Depth: 1/2 inch.

F. Joint Materials: ASTM C475/C475M and as recommended by gypsum board manufacturer for project conditions.
1. Fiberglass Tape: 2 inch wide, coated glass fiber tape for joints and corners, except as otherwise indicated.
2. Paper Tape: 2 inch wide, creased paper tape for joints and corners, except as otherwise indicated.
3. Joint Compound: Drying type, vinyl-based, ready-mixed.
4. Joint Compound: Setting type, field-mixed.

G. High Build Drywall Surfacer: Vinyl acrylic latex-based coating for spray application, designed to take the place of skim coating and separate paint primer in achieving Level 5 finish.
1. Products:
   a. Product: SHEETROCK® Brand TUFF-HIDE™ Primer-Surfacer manufactured by United States Gypsum Company, USG. www.USG.com..

H. Concrete Finishing Compounds: Vinyl-based compound; plain. For fill and finish coats over concrete.
1. Product: Cover Coat® Compound manufactured by United States Gypsum Company, USG. www.USG.com.

I. Corner Beads: GA216; Type CB; electro-galvanized steel.

J. Edge Trim: GA216; Type L bead; electro-galvanized steel and Type LC rolled-formed zinc. Milcore No. 66 J-metal edge, or as approved by Architect, at unfinished gypsum board edges against other finish materials.

K. Control Joint: U.S. Gypsum No. 093, roll-formed zinc.

L. Screws: ASTM C1002 for steel drill screws. Type G for fastening to gypsum board and Type S for fastening to light gauge steel framing.

M. Wall Texture: As manufactured by USG, multi-purpose, pre-packaged, non-asbestos type.

N. Screws for Fastening of Gypsum Panel Products to Cold-Formed Steel Studs Less than 0.033 inches in Thickness and Wood Members: ASTM C1002; self-piercing tapping screws, corrosion-resistant.

O. Screws for Fastening of Gypsum Panel Products to Steel Members from 0.033 to 0.112 inch in Thickness: ASTM C954; steel drill screws, corrosion-resistant.

P. Drywall Primer:

1. Paint material specifically formulated to fill the pores and equalize the suction difference between gypsum board surface paper and the compound used on finished joints, angles, fastener heads and accessories and over skim coatings.
2. Drywall primer which is applied to the finished surface of the work specified in this section shall be provided as specified under Sections 09 90 00 as applicable.
3. A good quality, white latex drywall primer formulated with high binder solids, applied undiluted, and shall be applied to gypsum board surfaces prior to the application of texture materials.

Q. Accessories for Tile Backer Units:
   1. Fasteners: Stainless steel drill screws of size and type recommended by tile backer unit manufacturer for fastening tile backer units to metal studs as indicated.
   2. Joint Tape for Cementitious Backer Units: As recommended by cementitious backer unit manufacturer and complying with ANSI A118.9 and ANSI A108.11.

R. Nails for Attachment to Wood Members: ASTM C514.

S. Staples For Attachment of Base Ply of Two-Ply Assembly to Wood Members: Flattened galvanized wire type as specified in ASTM C840.

T. Anchorage to Substrate: Tie wire, nails, screws, and other metal supports, of type and size to suit application; to rigidly secure materials in place.

PART 3 EXECUTION

3.1 EXAMINATION

A. Verify that project conditions are appropriate for work of this section to commence.

3.2 ACOUSTIC ACCESSORIES INSTALLATION

A. Acoustic Insulation: Place tightly within spaces, around cut openings, behind and around electrical and mechanical items within partitions, and tight to items passing through partitions.

B. Acoustic Sealant: Install in accordance with manufacturer's instructions.
   1. Place one bead continuously on substrate before installation of perimeter framing members.
   2. Place continuous bead at perimeter of each layer of gypsum board.
   3. Seal around all penetrations by conduit, pipe, ducts, and rough-in boxes.

3.3 BOARD INSTALLATION

A. Comply with ASTM C840, GA-216, and manufacturer's instructions. Install to minimize butt end joints, especially in highly visible locations.

B. Single-Layer Nonrated: Install gypsum board in most economical direction, with ends and edges occurring over firm bearing.
   1. Exception: Tapered edges to receive joint treatment at right angles to framing.

C. Fire-Resistance-Rated Construction: Install gypsum board in strict compliance with requirements of assembly listing.

D. Exposed Gypsum Board in Interior Wet Areas: Seal joints, cut edges, and holes with water-resistant sealant.

E. Exterior Sheathing: Comply with ASTM C1280. Install sheathing vertically, with edges butted tight and ends occurring over firm bearing.
   1. Seal joints, cut edges, and holes with water-resistant sealant.
   2. Paper-Faced Sheathing: Immediately after installation, protect from weather by application of water-resistive barrier.

F. Cementitious Backing Board: Install over steel framing members and plywood substrate where indicated, in accordance with ANSI A108.11 and manufacturer's instructions.

G. Installation on Wood Framing: For rated assemblies, comply with requirements of listing authority. For nonrated assemblies, install as follows:
   1. Single-Layer Applications: Screw attachment.

H. Curved Surfaces: Apply gypsum board to curved substrates in accordance with GA-226.

I. Moisture Protection: Treat cut edges and holes in moisture resistant gypsum board and exterior gypsum soffit board with sealant.

J. Apply acoustical putty pads completely around all electrical boxes and other items penetrating into acoustically rated walls, walls with acoustical insulation and all guestroom wall conditions.
   1. Refer to Section 07 84 00 - Firestopping.

3.4 INSTALLATION OF TRIM AND ACCESSORIES

A. Control Joints: Place control joints consistent with lines of building spaces and as indicated.
   1. Not more than 30 feet apart on walls and ceilings over 50 feet long.
   2. At exterior soffits, not more than 30 feet apart in both directions.

B. Corner Beads: Install at external corners, using longest practical lengths.

C. Edge Trim: Install at locations where gypsum board abuts dissimilar materials.

D. Moisture Guard Trim: Install on bottom edge of gypsum board according to manufacturer's instructions and in locations indicated on drawings.

E. Resilient Furring Channels: Attachment to substrate through one leg only.

3.5 JOINT TREATMENT

A. Glass Mat Faced Gypsum Board and Exterior Glass Mat Faced Sheathing: Use fiberglass joint tape, embed and finish with setting type joint compound.

B. Paper Faced Gypsum Board: Use paper joint tape, embed with drying type joint compound and finish with drying type joint compound.

3.6 FINISHES

A. Refer to GA-214-2022 Recommended Levels of Finish for Gypsum Panel Products

B. Finish gypsum board in accordance with levels defined in ASTM C840, as follows:
   1. Level 5: Recommended for areas where severe lighting conditions exist and areas that are to receive gloss, semi-gloss, enamel or non-textured flat paints. Level 5 requires all the operations in Level 4. Additionally, a thin skim coat of joint compound, or material manufactured especially for this purpose, is applied to the entire surface. A skim coat of joint compound is intended to conceal small imperfections in joints and on the surface of the

gypsum board to help conceal joints and create the appearance of flatness. A skim coat will also smooth the texture of the paper, minimize differences in surface porosity, and create a more uniform surface to which the final decoration can be applied.

a. Joints and interior angles shall have tape embedded in joint compound and 2 separate coats of joint compound applied over flat joints and one separate coat applied over interior angles.
b. Fastener heads and accessories shall be covered with 3 separate coats of joint compound.
c. A thin skim coat of joint compound, or a material manufactured especially for this purpose, shall be applied to the entire surface to fill imperfections in the joint work, smooth the paper texture and provide a uniform surface for decorating. Excess compound shall be immediately sheared off, leaving a film of skim coating compound completely covering the paper.
d. The surface shall be smooth and free of tool marks and ridges.
e. Surface to be coated with Drywall Primer as specified herein prior to application of texture.
f. Untextured surfaces to be coated with Drywall Primer prior to application of final finishes as specified in Sections 09 90 00 as applicable.

2. Level 4: Typically specified in appearance areas where smooth wall designs are decorated with flat paints, light textures, non-continuous textures, or wallcoverings are to be applied. The design professional shall clearly indicate the areas that meet these criteria on the finish schedule and/or plans, specify the mock-up procedure and mock-up construction details within the project documents. Non-flat or dark/deep tone paints are not recommended; refer to Level 5. In critical lighting areas, flat paints applied over light continuous textures may reduce joint photographing. The weight, texture, and sheen level of wallcoverings applied over this level of finish should be carefully evaluated. Joints and fasteners must be adequately concealed if the wallcovering used is of lightweight construction, contains limited pattern, has a sheen level other than flat, or any combination thereof. Unbacked vinyl wallcoverings are not recommended over this level of finish.
   a. Joints and interior angles shall have tape embedded in joint compound and 2 separate coats of joint compound applied over flat joints and one separate coat of joint compound applied over interior angles.
   b. Fastener heads and accessories shall be covered with 3 separate coats of joint compound..
   c. Joint compound shall be smooth and free of tool marks and ridges.
   d. Surface to be coated with Drywall Primer as specified herein prior to application of texture.
   e. Untextured surfaces to be coated with Drywall Primer prior to application of final finishes as specified in Sections 09 90 00 as applicable.
3. Level 3: (Utility and Mechanical Spaces) (Appearance areas to receive heavy or medium texture (spray or hand applied) finishes before final painting, or where heavy grade wallcoverings are to be applied as final decoration. This level of finish is not to be used where smooth painted surface or light to medium wallcoverings are to be applied.):
   a. Joints and interior angles shall have tape embedded in joint compound and one additional coat of joint compound applied over joints and interior angles.
   b. Fastener heads and accessories shall be covered with 2 separate coats of joint compound.

c. Joint compound shall be smooth and free of tool marks and ridges.
d. Surface to be coated with Drywall Primer as specified herein prior to application of texture.
e. Untextured surfaces to be coated with Drywall Primer prior to application of final finishes as specified in Sections 09 90 00 as applicable.

4. Level 2: In utility areas, behind cabinetry, and on backing board to receive tile finish.(Areas to receive applied wall panels, wood paneling, applied products, etc.):
   a. Joints and interior angles shall have tape embedded in joint compound and wiped with a joint knife leaving a thin coating joint compound over joints and interior angles.
   b. Fastener heads and accessories shall be covered with a coat of joint compound.
   c. Surface shall be free of excess joint compound.
   d. Tool marks and ridges are acceptable.
   e. Joint compound applied over the body of the tape at the time of tape embedment shall be considered a separate coat of joint compound and shall satisfy the conditions of this level.
5. Level 1: Fire rated wall areas above finished ceilings, in attics, in areas where the assembly will be concealed or in building service corridors and other areas not normally open to public view whether or not accessible in the completed construction.
   a. Joints and interior angles shall have tape embedded in joint compound.
   b. Surface shall be free of excess joint compound.
   c. Tool marks and ridges are acceptable.
6. Level 0: Temporary partitions and surfaces indicated to be finished in later stage of project.No taping, finishing, or accessories required.

C. Tape, fill, and sand exposed joints, edges, and corners to produce smooth surface ready to receive finishes.
   1. Feather coats of joint compound so that camber is maximum 1/32 inch.
   2. Taping, filling, and sanding are not required at surfaces behind adhesive applied ceramic tile and fixed cabinetry.
   3. Taping, filling, and sanding are not required at base layer of double-layer applications.

D. Where Level 5 finish is indicated, spray apply high build drywall surfacer over entire surface after joints have been properly treated; achieve a flat and tool mark-free finish.

E. Fill and finish joints and corners of cementitious backing board as recommended by manufacturer.

3.7 TEXTURE FINISH

A. Apply finish texture coating by means of spraying apparatus in accordance with manufacturer's instructions and to match approved sample.

3.8 TOLERANCES

A. Maximum Variation of Finished Gypsum Board Surface from True Flatness: 1/8 inch in 10 feet in any direction.

END OF SECTION

SECTION 092216 - NON-STRUCTURAL METAL FRAMING

PART 1 GENERAL

1.1 SECTION INCLUDES

A. Metal partition, ceiling, and soffit framing.

B. Drywall Suspension Systems

C. Framing accessories.

D. Sheet Metal Backing

1.2 RELATED REQUIREMENTS

A. Section 052100 - Steel Joists: Execution requirements for anchors for attaching work of this section.

B. Section 054000 - Cold-Formed Metal Framing: Requirements for structural, load-bearing, metal stud framing and exterior wall stud framing.

C. Section 054000 - Cold-Formed Metal Framing, for exterior non-loading bearing structural metal stud framing, interior wall openings greater than 8 feet wide, and headers, interior soffits and ceilings where;
   1. Load is greater than 20 psf transverse
   2. Load is greater than 200 lbs axial.

D. Section 054000 - Cold-Formed Metal Framing: Execution requirements for anchors for attaching work of this section.

E. Section 055000 - Metal Fabrications: Metal fabrications attached to stud framing.

F. Section 055000 - Metal Fabrications: Execution requirements for anchors for attaching work of this section.

G. Section 072100 - Thermal Insulation: Acoustic insulation.

H. Section 076200 - Sheet Metal Flashing and Trim: Head and sill flashings

I. Section 078400 - Firestopping: Sealing top-of-wall assemblies at fire-resistance-rated walls.

J. Section 079200 - Joint Sealants: Sealing acoustical gaps in construction other than gypsum board or plaster work.

K. Section 092116 - Gypsum Board Assemblies: Execution requirements for anchors for attaching work of this section.

1.3 REFERENCE STANDARDS

A. AISI S100 - North American Specification for the Design of Cold-Formed Steel Structural Members; 2016, with Supplement (2018).

B. ASTM A36/A36M - Standard Specification for Carbon Structural Steel; 2019.

C. ASTM A1011/A1011M - Standard Specification for Steel, Sheet and Strip, Hot-Rolled, Carbon, Structural, High-Strength Low-Alloy, High-Strength Low-Alloy with Improved Formability, and Ultra-High Strength; 2018a.

D. ASTM A653/A653M - Standard Specification for Steel Sheet, Zinc-Coated (Galvanized) or Zinc-Iron Alloy-Coated (Galvannealed) by the Hot-Dip Process; 2020.

E. ASTM A1003/A1003M - Standard Specification for Steel Sheet, Carbon, Metallic- and Nonmetallic-Coated for Cold-Formed Framing Members; 2015.

F. ASTM C645 - Standard Specification for Nonstructural Steel Framing Members; 2018.

G. ASTM C754 - Standard Specification for Installation of Steel Framing Members to Receive Screw-Attached Gypsum Panel Products; 2020.

H. ASTM C1002 - Standard Specification for Steel Self-Piercing Tapping Screws for Application of Gypsum Panel Products or Metal Plaster Bases to Wood Studs or Steel Studs; 2020.

I. ASTM E84 - Standard Test Method for Surface Burning Characteristics of Building Materials; 2021a.

J. ASTM E90 - Standard Test Method for Laboratory Measurement of Airborne Sound Transmission Loss of Building Partitions and Elements; 2009 (Reapproved 2016).

K. ASTM E413 - Classification for Rating Sound Insulation; 2016.

L. ASTM F1267 - Standard Specification for Metal, Expanded, Steel; 2018.

M. SSPC-Paint 20 - Zinc-Rich Coating (Type I - Inorganic, and Type II - Organic); 2019.

N. Steel Stud Manufacturers Association (SSMA).

O. Steel Framing Industry Association (SFIA).

1.4 SUBMITTALS

A. See Section 013300 - Submittal Requirements for submittal procedures.

B. Shop Drawings:
   1. Indicate prefabricated work, component details, stud layout, framed openings, anchorage to structure, acoustic details, type and location of fasteners, accessories, and items of other related work.
   2. Describe method for securing studs to tracks, splicing, and for blocking and reinforcement of framing connections.
   3. Provide shop drawings and calculations prepared by an engineer registered in the State of Nevada as required in this Section including:
      a. Suspension systems.
      b. Ceiling framing and soffits.
      c. Engineering analysis depicting stress and deflection requirements for each framing application.
      d. Selection of framing components, accessories, fasteners, and welded connection requirements.

C. Product Data: Provide data describing framing member materials and finish, product criteria, load charts, and limitations.
   1. Provide manufacturer's data on partition head to structure connectors, showing compliance with requirements.

D. Manufacturer's Installation Instructions: Indicate special procedures and perimeter conditions requiring special attention.

1.5 QUALITY ASSURANCE

A. Installer Qualifications: Company specializing in performing the work of this section with minimum 5 years experience and approved by manufacturer.

B. Fire-Test-Response Characteristics: For fire-resistance-rated assemblies that incorporate non-structural steel framing, provide materials and construction identical to those tested in assembly indicated according to ASTM E119 by, and displaying a classification label from, an independent testing agency acceptable to authority having jurisdiction.
   1. Construct fire-resistance-rated partitions in compliance with tested assembly requirements indicated on the Drawings.
   2. Rated assemblies to be substantiated from applicable testing using the proposed products, by Contractor.
   3. Both metal framing and wallboard manufacturers must submit written confirmation that they accept the other manufacturer’s product as a suitable component in the assembly. Acceptance is as follows:
      a. If installation of both products is proper, no adverse effect will result in the performance of one manufacturer's product by the other's products.
      b. Combining products can be substantiated by required assembly tests.

C. STC-Rated Assemblies: For STC-rated assemblies, provide materials and construction identical to those tested in assembly indicated according to ASTM E90 and classified according to ASTM E413 by an independent testing agency.

D. Sound test reports must be from an independent laboratory accredited by the National Institute of Standards and Technology (NIST) under the National Voluntary Laboratory Accreditation Program (NVLAP).

PART 2 PRODUCTS

2.1 MANUFACTURERS

A. Furnish products as Manufactured by a Manufacturing member of the Steel Stud Manufacturers Association (SSMA) www.ssma.com, or Steel Framing Industry Association (SFIA) and subject to compliance with Specification requirements.
   1. Metal Framing, Connectors, and Accessories:
      a. CEMCO: www.cemcosteel.com/#sle.
      b. ClarkDietrich Building Systems: www.clarkdietrich.com.
      c. SCAFCO Corporation: www.scafco.com/#sle.
      d. Approved Equal.

B. Substitutions: 012500 - Product Substitutions.

2.2 FRAMING MATERIALS

A. Fire-Resistance-Rated Assemblies: Comply with applicable code and as follows:

B. Loadbearing Studs: As specified in Section 054000.

C. Non-Loadbearing (Interior) Framing System Components: ASTM C645; (min. G40), galvanized sheet steel, of size and properties necessary to comply with ASTM C754 for the spacing indicated, with maximum deflection of wall framing of L/240 at 5 psf.
   1. Interior Studs @ Wet Walls: C shaped with flat or formed webs, punched, and size as indicated on the drawings with knurled faces, hot-dipped galvanized steel with a protective coating equal to G60 min.
   2. Curved Stud and Track Components: 2-1/2 inch, 3-5/8 inch and 6 inc hand shapeable, pivotal track components manufactured of structural Grade 22, hot-dipped galvanized steel with a protective coating equal to G-60, as manufactured by:
      a. Basis of Design: Flex-C Trac by Flex-Ability Concepts, Edmond, OK (405) 302-0611
      b. Custom curved stud and track components as manufactured by RadiusTrack Corporation, 6612 Lyndale Avenue South, Suite 2, Richfield, MN 55423 (888) 872-3487.
   3. Runners: U-shaped, sized to match studs.
   4. Ceiling Channels: C shaped, cold-rolled.
   5. Furring: Hat-shaped sections, minimum depth of 7/8 inch.

D. Sound isolation clips
   1. Manufacturer:Kinetics Noise Control, Dublin, Ohio: Product:Model Iso-Max Sound Isolation Clips. http://www.kineticsnoise.com/arch/isomax.html
   2. Vertical Load capacity. Clips shall have sufficient capacity to support wall or ceiling weights as constructed. In a vertical load test comparible to a ceiling installation, the clip shall have a minimum design load capacity of 36 lbs. using 25 gauge furring channel. The minimum design load capacity when using 22 gauge furring channel shall be 48 lbs. Design Load capacity shall be based on a safety factor where the load to failure, defined as pullout of the channel from the clip, is a minimum 2.5 times the allowable maximum Design Load. Anchors for attachment of the clips to the substructure shall be selected to support wall and/or ceiling weights at each clip.
   3. The isolation clips shall consist of a rubber element into which a standard galvanized steel furring channel, 7/8 in. x minimum 25 gauge, is captured. The channel legs snap fit into the rubber element without any metal-to-metal or other rigid contact with building elements.

E. Shaft Wall Studs and Accessories: ASTM C645; galvanized sheet steel, of size and properties necessary to comply with ASTM C754 and specified performance requirements.
   1. Coordinate materials found in this section with applications and materials found in Section 092116. Non-Load bearing gypsum wall assemblies for use in the following areas:
      a. Shaft Wall Application: Mechanical Shafts.
      b. Shaft Wall Width; CH-Stud & E-Stud with J-Runner: As indicated on Drawings.
         1) Providing continuous edge support for Liner Panel edges.
         2) Hot-dipped galvanized, lengths as required.
      c. Shaft Wall Material Thickness: As indicated on Drawings.
      d. Shaft Wall Deflection: L/240.
   2. Manufacturers - Shaft Wall Studs and Accessories:
      a. Same manufacturer as other framing materials.

3. Substitutions: See Section 016000 - Product Requirements.

F. Drywall Suspension System:
   1. Framing system for gypsum board panels consisting of cold-rolled steel members conforming to ASTM C635, with exposed surfaces finished in manufacturer's standard enamel paint finish.
   2. Fire rating: 1, 1-1/2, 2, 3, or __ hour rating in accordance with UL assembly indicated.
   3. Components: Main tees, furring cross channels, furring cross tees, and cross tees.
   4. Accessories:
      a. U-shaped channel molding.
      b. Galvanized carbon steel (12 ga.) hanger wire.
   5. Acceptable product: Equivalent to Drywall Suspension System by USG.

G. Ceiling Isolation Hangers: Provide hangers and accessories as manufactured by Kinetics Noise Control, Inc., Dublin, Ohio.

H. Compression Struts: C- shape steel studs. in minimum thickness as required to adequately resist the vertical component induced by the bracing wires in suspended ceiling applications.

I. Partition Head to Structure Connections: Provide mechanical anchorage devices that accommodate deflection using slotted holes, screws, and anti-friction bushings, preventing rotation of studs while maintaining structural performance of partition.
   1. Structural Performance: Maintain lateral load resistance and vertical movement capacity required by applicable code, when evaluated in accordance with AISI S100.
   2. Material: ASTM A653/A653M steel sheet, SS Grade 50, with G60/Z180 hot-dipped galvanized coating.
   3. Provide components UL-listed for use in UL-listed fire-resistance-rated head of partition joint systems indicated on drawings.
   4. Provide top track preassembled with connection devices spaced to fit stud spacing indicated on drawings; minimum track length of 12 feet.

J. Non-Loadbearing Framing Accessories:
   1. Ceiling Hangers: Type and size as specified in ASTM C754 for spacing required.
   2. Partial Height Wall Framing Support: Provides stud reinforcement and anchored connection to floor.
      a. Materials: ASTM A36/A36M formed sheet steel support member with factory-welded ASTM A1003/A1003M steel plate base.
   3. Blocking: Install mechanically fastened steel channel blocking for support of:
      a. Framed openings.
      b. Wall-mounted cabinets.
      c. Plumbing fixtures.
      d. Toilet partitions.
      e. Toilet accessories.
      f. Wall-mounted door hardware.
      g. Other wall mounted items
   4. Sheet Metal Backing: 1/16 inch thick, galvanized.
      a. 16 gauge minimum galvanized steel sheet.
      b. 16 gauge minimum c-shaped steel stud.
      c. "Notch-Tite" and "Flush Mount" as manufactured by Metal Lite, Inc., 3070 E. Miraloma Avenue, Anaheim, CA 92806 (800) 886-6824.

5. Fasteners: ASTM C1002 self-piercing tapping screws.
   a. GA 203, self-drilling, self-tapping screws.
6. Anchorage Devices: Powder actuated.
7. Acoustic Insulation: See Section 072100.

K. Clips, Brackets: ASTM A653 Galvanized wire or sheet metal designed for attachment of framing, furring and bridging members.
   1. Deflection Clips: If acceptable to Building Official, VertiClip™ as manufactured by Signature Industries, LLC, P.O. Box 68005, Raleigh, NC 27613 (919) 844-0789 may be provided for attachment of framing to roof and floor construction at head and slip conditions. Provide sizes as required for stud depth(s). Clips shall be manufactured of steel conforming to ASTM A 653 Prime Certified G60 galvanized material or better, 50 ksi yield strength and 65 ksi ultimate strength. Deflection clips to have positive attachment to structure and stud material while allowing for frictionless movement.
   2. Bridging Clips: If acceptable to Building Official, BridgeClip™ as manufactured by Signature Industries, LLC, P. O. Box 68005, Raleigh, NC 27613 (919) 844-0789 may be provided for attachment of bridging to studs.

2.3 FABRICATION

A. Fabricate assemblies of framed sections to sizes and profiles required.

B. Fit, reinforce, and brace framing members to suit design requirements.

PART 3 EXECUTION

3.1 EXAMINATION

A. Verify existing conditions before starting work.

B. Verify that rough-in utilities are in proper location.

3.2 INSTALLATION OF STUD FRAMING

A. Comply with requirements of ASTM C754.

B. Extend partition framing to structure where indicated and to ceiling in other locations as indicated on the drawings.

C. Partitions Terminating at Ceiling: Attach ceiling runner securely to ceiling track in accordance with manufacturer's instructions.

D. Partitions Terminating at Structure: Attach top runner to structure, maintain clearance between top of studs and structure, and connect studs to track using specified mechanical devices in accordance with manufacturer's instructions; verify free movement of top of stud connections; do not leave studs unattached to track.

E. Align and secure top and bottom runners at 24 inches on center and within 6 inches from the end.

F. At partitions indicated with an acoustic rating:
   1. Provide components and install as required to produce STC ratings as indicated, based on published tests by manufacturer conducted in accordance with ASTM E90 with STC rating calculated in accordance with ASTM E413.

2. Place two beads of acoustic sealant between runners and substrate, studs and adjacent construction.
3. Place two beads of acoustic sealant between studs and adjacent vertical surfaces.At exterior wall conditions, install felt strips between the stud and wall.

G. At partitions indicated with a fire rating: Install framing and furring indicated for the required rating.

H. Fit runners under and above openings; secure intermediate studs to same spacing as wall studs.

I. Install studs vertically at spacing indicated on drawings.

J. Align stud web openings horizontally.

K. Secure studs to bottom track using fastener method. Do not weld.

L. Stud splicing is permissible; splice studs with 8 inch nested lap, secure each stud flange with flush head screw.

M. Fabricate corners using a minimum of three studs.

N. Install double studs at wall openings, door and window jambs, not more than 2 inches from each side of openings.

O. Brace stud framing system rigid.

P. Coordinate erection of studs with requirements of door frames and window frames; install supports and attachments.

Q. Coordinate installation of bucks, anchors, and blocking with electrical, mechanical, and other work to be placed within or behind stud framing.

R. Blocking: Use steel channels secured to studs. Provide blocking for support of plumbing fixtures, toilet partitions, wall cabinets, toilet accessories, and hardware.

S. Sound Isolation Clips: Mechanically attach to framing or structure with fasteners recommended by clip manufacturer. Install at spacing indicated on drawings.

T. Furring: Coordinate with sound isolation clip spacing and locations. Lap splices a minimum of 6 inches.

U. Use sheet metal backing, 16 gauge minimum for reinforcement of all wall mounted items and items requiring backing per manufacturer's instructions..

3.3 CEILING AND SOFFIT FRAMING

A. Comply with requirements of ASTM C754.

B. Install furring after work above ceiling or soffit is complete. Coordinate the location of hangers with other work.

C. Install furring independent of walls, columns, and above-ceiling work.

D. Securely anchor hangers to structural members or embed them in structural slab. Space hangers as required to limit deflection to criteria indicated. Use rigid hangers at exterior soffits.

E. Space main carrying channels at maximum 72 inch on center, and not more than 6 inches from wall surfaces. Lap splice securely.

F. Securely fix carrying channels to hangers to prevent turning or twisting and to transmit full load to hangers.

G. Place furring channels perpendicular to carrying channels, not more than 2 inches from perimeter walls, and rigidly secure. Lap splices securely.

H. Reinforce openings in suspension system that interrupt main carrying channels or furring channels with lateral channel bracing. Extend bracing minimum 24 inches past each opening.

I. Laterally brace suspension system.

J. Provide separate support members on each side of control or expansion joints. Do not bridge.

3.4 SOUND ISOLATION CLIP INSTALLATION

A. General – Install work in accordance with the manufacturer's approved product installation procedures.

B. Spacing and location of sound isolation clips shall be determined by the manufacturer based on wall or ceiling type. Installation drawing details shall be provided by the manufacturer to assure optimum sound control and structural integrity of the system.

3.5 TOLERANCES

A. Maximum Variation From True Position: 1/8 inch in 10 feet.

B. Maximum Variation From Plumb: 1/8 inch in 10 feet.

END OF SECTION

SECTION 093000 - TILING

PART 1 GENERAL

1.1 SECTION INCLUDES

A. Tile for wall applications.

B. Non-ceramic trim.

1.2 RELATED REQUIREMENTS

A. Section 079200 - Joint Sealants: Sealing joints between tile work and adjacent construction and fixtures.

B. Section 092116 - Gypsum Board Assemblies: Tile backer board.

C. Section 096500 - Resilient Flooring, Wall Base and Accessories: for additional metal and vinyl transitions.

1.3 REFERENCE STANDARDS

A. ANSI A108.1a - American National Standard Specifications for Installation of Ceramic Tile in the Wet-Set Method, with Portland Cement Mortar; 2017.

B. ANSI A108.1b - American National Standard Specifications for Installation of Ceramic Tile on a Cured Portland Cement Mortar Setting Bed with Dry-Set or Latex-Portland Cement Mortar; 2017.

C. ANSI A108.1c - Contractor's Option: Installation of Ceramic Tile in the Wet-Set Method with Portland Cement Mortar or Installation of Ceramic Tile on a Cured Portland Cement Mortar Setting Bed with Dry-Set or Latex-Portland Cement Mortar; 1999 (Reaffirmed 2021).

D. ANSI A108.4 - American National Standard Specifications for Installation of Ceramic Tile with Organic Adhesive or Water Cleanable Tile-Setting Epoxy Adhesive; 2019.

E. ANSI A108.5 - American National Standard Specifications for Installation of Ceramic Tile with Dry-Set Portland Cement Mortar or Latex-Portland Cement Mortar; 2021.

F. ANSI A108.6 - American National Standard Specifications for Installation of Ceramic Tile with Chemical Resistant, Water Cleanable Tile-Setting and -Grout Epoxy; 1999 (Reaffirmed 2019).

G. ANSI A108.9 - American National Standard Specifications for Installation of Ceramic Tile with Modified Epoxy Emulsion Mortar/Grout; 1999 (Reaffirmed 2019).

H. ANSI A108.10 - American National Standard Specifications for Installation of Grout in Tilework; 2017.

I. ANSI A108.11 - American National Standard Specifications for Interior Installation of Cementitious Backer Units; 2018.

J. ANSI A108.12 - American National Standard for Installation of Ceramic Tile with EGP (Exterior Glue Plywood) Latex-Portland Cement Mortar; 1999 (Reaffirmed 2019).

K. ANSI A108.13 - American National Standard for Installation of Load Bearing, Bonded, Waterproof Membranes for Thin-Set Ceramic Tile and Dimension Stone; 2005 (Reaffirmed 2021).

L. ANSI A118.4 - American National Standard Specifications for Modified Dry-Set Cement Mortar; 2019.

M. ANSI A118.6 - American National Standard Specifications for Standard Cement Grouts for Tile Installation; 2019.

N. ANSI A118.7 - American National Standard Specifications for High Performance Cement Grouts for Tile Installation; 2019.

O. ANSI A118.10 - American National Standard Specifications for Load Bearing, Bonded, Waterproof Membranes For Thin-Set Ceramic Tile And Dimension Stone Installation; 2014 (Reaffirmed 2019).

P. ANSI A118.15 - American National Standard Specifications for Improved Modified Dry-Set Cement Mortar; 2019.

Q. ANSI A136.1 - American National Standard for Organic Adhesives for Installation of Ceramic Tile; 2020.

R. ANSI A137.1 - American National Standard Specifications for Ceramic Tile; 2021.

S. ANSI A137.2 - American National Standard Specifications for Glass Tile; 2021.

T. ASTM C150/C150M - Standard Specification for Portland Cement; 2021.

U. ASTM C1178/C1178M - Standard Specification for Coated Glass Mat Water-Resistant Gypsum Backing Panel; 2018.

V. TCNA (HB) - Handbook for Ceramic, Glass, and Stone Tile Installation; 2021.

1.4 ADMINISTRATIVE REQUIREMENTS

A. Preinstallation Meeting: Convene a preinstallation meeting one week before starting work of this section; require attendance by affected installers.

1.5 SUBMITTALS

A. See Section 01 3300 - Submittals, for submittal procedures.

B. Product Data: Provide manufacturers' data sheets on tile, mortar, grout, and accessories. Include instructions for using grouts and adhesives.

C. Shop Drawings: Indicate tile layout, patterns, color arrangement, perimeter conditions, junctions with dissimilar materials, control and expansion joints, thresholds, ceramic accessories, and setting details.

D. Samples: Mount tile and apply grout on two plywood panels, minimum 18 by 18 inches in size illustrating pattern, color variations, and grout joint size variations.

E. Submit manufacturer's certification under provisions of this Section that the materials supplied conform to ANSI A137.1.

F. Manufacturer's Certificate: Certify that products meet or exceed specified requirements.

G. Submit proof of warranty.

H. Maintenance Data: Include recommended cleaning methods, cleaning materials, stain removal methods, and polishes and waxes.

I. Maintenance Materials: Furnish the following for Owner's use in maintenance of project.
   1. Extra Materials: Furnish one (1) square foot of tile for each 100 square feet of each color and size of tile and grouting materials used in the Project. If less than 100 square feet is installed, provide a minimum of one square foot of extra stock. Extra materials shall be furnished in original packaging.

J. Maintenance Materials: Furnish the following for Owner's use in maintenance of project.
   1. See Section 016000 - Product Requirements, for additional provisions.
   2. Extra Tile: 1 percent of each size, color, and surface finish combination, but not less than 10 of each type.
   3. Grout: Furnish quantity of grout equal to 3 percent of amount installed for each type, composition, and color indicated.

1.6 QUALITY ASSURANCE

A. Manufacturer Qualifications: Company specializing in manufacturing the types of products specified in this section, with minimum five years of documented experience.

B. Installer Qualifications:
   1. Company specializing in performing tile installation, with minimum of five years of documented experience.

C. Dynamic Coefficient of Friction (DCOF): Provide floor tile products and finished floor tile installation with a wet DCOF of 0.42 minimum for level surfaces and treads of stairs, per ANSI 137.1.

1.7 DELIVERY, STORAGE, AND HANDLING

A. Protect adhesives from freezing or overheating in accordance with manufacturer's instructions.

1.8 FIELD CONDITIONS

A. Do not install solvent-based products in an unventilated environment.

B. Maintain ambient and substrate temperature above 50 degrees F and below 100 degrees F during installation and curing of setting materials.

1.9 WARRANTY

A. See Section 01 7836 - Warranties Procedures, for additional warranty requirements.

B. Correct defective Work within a five year period after Date of Substantial Completion.

C. The Contractor warrants the work of this Section to be in accordance with the Contract Documents and free from faults and defects in materials and workmanship for a period of 25 years. The manufacturer of adhesives, mortars, grouts and other installation materials shall provide a written twenty five (25) year warranty, which covers materials and labor. .

PART 2 PRODUCTS

2.1 MANUFACTURERS (NON-TILE)

A. Basis of Design: Contract Documents are based on products specified below to establish a standard of quality. Other acceptable manufacturers with products having equivalent

characteristics may be considered, provided deviations are minor and design concept expressed in Contract Documents is not changed, as determined by the Architect.

1. Basis of Design Manufacturer: LATICRETE International, Inc.: www.laticrete.com.

B. Acceptable Manufacturers: Subject to compliance with requirements of Contract Documents, provide product by one of manufacturers listed alphabetically below. If not listed. submit as substitution according to Conditions of the Contract and Division 1 Sections.
   1. Custom Building Products: www.custombuildingproducts.com.
   2. Mapei Corporation: www.mapei.com.

C. Single Source Responsibility:
   1. Source Limitations for Setting Materials: Obtain ingredients of a uniform quality for each mortar, adhesive, and grout from single manufacturer and each aggregate from single source or producer.
      a. Obtain setting materials, waterproof membrane, and crack isolation membrane, from single manufacturer.
   2. Source Limitations for Other Products: Obtain each of the following products specified in this Section from a single manufacturer:
      a. Metal edge strips.

D. Substitutions: 01 25 00 - Substitution Procedures.

2.2 TILE

A. General: Provide tile that complies with ANSI A137.1 for types, compositions and other characteristics indicated. Provide tile in the locations and of the types colors and pattern indicated on the Drawings and identified in the Material Schedule.

B. Porcelain: As scheduled on Drawings and Material Schedules.

C. Manufacturers: All products by the same manufacturer.
   1. Basis of Design: Emser Tile, LLC: www.emser.com/#sle.
   2. Or Approved Equal.
   3. Substitutions: See Section 016000 - Product Requirements.

2.3 TRIM AND ACCESSORIES

A. Metal Trim: Brushed stainless steel, style and dimensions to suit application, for setting using tile mortar or adhesive.
   1. Applications: As indicated on Drawings.
      a. Open edges of wall tile.
      b. Floor to wall joints.

2.4 SETTING MATERIALS

A. Provide setting and grout materials from same manufacturer.

B. Latex-Portland Cement Mortar Bond Coat: ANSI A118.4.
   1. Products:
      a. Custom Building Products; ProLite Premium Rapid Setting Large Format Tile Mortar, with Multi-Surface Bonding Primer: www.custombuildingproducts.com/#sle.
      b. LATICRETE International, Inc; 257 TITANIUM: www.laticrete.com/#sle.

C. Improved Latex-Portland Cement Mortar Bond Coat: ANSI A118.15.
   1. Applications: Use this type of bond coat where indicated, and where no other type of bond coat is indicated.
   2. Products:
      a. Custom Building Products; Porcelain Tile Fortified Thin-Set Mortar: www.custombuildingproducts.com/#sle.
      b. LATICRETE International, Inc; LATICRETE 254 Platinum: www.laticrete.com/#sle.
      c. Or Approved Equal.

2.5 ADHESIVE MATERIALS

A. Manufacturers:
   1. LATICRETE International, Inc; Laticrete 15 Premium Mastic: www.laticrete.com.
   2. Custom Building Products; OmniGrip: www.custombuildingproducts.com.
   3. Mapei Corporation: www.mapei.com.

B. Epoxy Adhesive: ANSI A118.3, thinset bond type.

2.6 GROUTS

A. Approved Manufacturers:
   1. Basis of Design: LATICRETE International, Inc; LATICRETE PERMACOLOR Grout: www.laticrete.com/#sle.
   2. Custom Building Products; Fusion Pro® Single Component® Grout: www.custombuildingproducts.com.
   3. Mapei Corporation: www.mapei.com.
   4. Substitutions: 012500 - Substitution Procedures.

B. High Performance Polymer Modified Grout: ANSI A118.7 polymer modified cement grout.
   1. Applications: Use this type of grout where indicated and where no other type of grout is indicated with built-in with Microban antimicrobial protection to fight the growth of mild and mildew on the grout surface.
   2. Use sanded grout for joints 1/8 inch wide and larger; use unsanded grout for joints less than 1/8 inch wide.
   3. Color(s): As indicated on drawings.
   4. Products:
      a. Custom Building Products; Fusion Pro® Single Component® Grout: www.custombuildingproducts.com/#sle.
      b. LATICRETE International, Inc; LATICRETE PERMACOLOR Select Grout: www.laticrete.com/#sle.
      c. Mapei Corporation: Ultracolor Plus: www.mapei.com.
      d. Substitutions: 012500 - Substitution Procedures.

2.7 MAINTENANCE MATERIALS

A. Tile Sealant: Gunnable, silicone, siliconized acrylic, or urethane sealant; moisture and mildew resistant type.
   1. Applications: Between tile and plumbing fixtures.
   2. Color(s): As selected by Architect from manufacturer's full line.
   3. Products:

a. Custom Building Products; Commercial 100% Silicone Caulk: www.custombuildingproducts.com/#sle.
b. LATICRETE International, Inc; LATICRETE LATASIL: www.laticrete.com/#sle.

B. Grout Sealer: Liquid-applied, moisture and stain protection for existing or new Portland cement grout.
1. Composition: Water-based colorless silicone.
2. Products:

C. Tile Sealer: Stain protection for porcelain tile tile.
1. Products:
a. Custom Building Products; Aqua Mix Enrich 'N' Seal: www.custombuildingproducts.com/#sle.
b. STONETECH, a division of LATICRETE international, Inc; STONETECH Heavy Duty Stone Sealer: www.laticrete.com/#sle.

2.8 ACCESSORY MATERIALS

A. Waterproofing Membrane: Specifically designed for bonding to cementitious substrate under thick mortar bed or thin-set tile; complying with ANSI A118.10.
1. Fluid or Trowel Applied Type:
a. Material: Synthetic rubber.
b. Thickness: 25 mils, minimum, dry film thickness.
c. Products:
1) LATICRETE International, Inc; LATICRETE HYDRO BAN: www.laticrete.com/#sle.

B. Mesh Tape: 2 inch wide self-adhesive fiberglass mesh tape.

PART 3 EXECUTION

3.1 EXAMINATION

A. Verify that wall surfaces are smooth and flat within the tolerances specified for that type of work, are dust-free, and are ready to receive tile.

B. Verify that required floor-mounted utilities are in correct location.

3.2 PREPARATION

A. Protect surrounding work from damage.

B. Vacuum clean surfaces and damp clean.

C. Seal substrate surface cracks with filler. Level existing substrate surfaces to acceptable flatness tolerances.

D. Install backer board in accordance with ANSI A108.11 and board manufacturer's instructions. Tape joints and corners, cover with skim coat of setting material to a feather edge.

E. Install cementitious backer board in accordance with ANSI A108.11 and board manufacturer's instructions. Tape joints and corners, cover with skim coat of dry-set mortar to a feather edge.

F. Prepare substrate surfaces for adhesive installation in accordance with adhesive manufacturer's instructions.

3.3 INSTALLATION - GENERAL

A. Install tile and grout in accordance with applicable requirements of ANSI A108.1a through ANSI A108.13, manufacturer's instructions, and TCNA (HB) recommendations.

B. Cut and fit tile to penetrations through tile, leaving sealant joint space. Form corners neatly.

C. Place tile joints uniform in width, subject to variance in tolerance allowed in tile size. Make grout joints without voids, cracks, excess mortar or excess grout, or too little grout.

D. Form internal angles square and external angles bullnosed.

E. Install non-ceramic trim in accordance with manufacturer's instructions.

F. Keep control and expansion joints free of mortar, grout, and adhesive.

G. Prior to grouting, allow installation to completely cure; minimum of 48 hours.

H. Grout tile joints unless otherwise indicated.

3.4 INSTALLATION - SHOWERS.

A. At tiled shower receptors install in accordance with The Tile Council of North America Handbook Method B420, mortar bed floor, and W245, thin-set over coated glass mat backer board walls.

B. At bathtub walls install in accordance with TCNA (HB) Method B412, over cementitious backer units with waterproofing membrane.

C. Grout with latex-Portland cement grout.

3.5 INSTALLATION - WALL TILE

A. Over cementitious backer units on studs, install in accordance with TCNA (HB) Method W244, using membrane at toilet rooms.

B. Over coated glass mat backer board on studs, install in accordance with The Tile Council of North America Handbook Method W245, using membrane at toilet rooms and showers.

3.6 TILE AND GROUT SEALING

A. Grout Sealer: Apply grout sealer (if required) to cementitious grout joints in tile floors according to grout-sealer manufacturer's written instructions. As soon as grout sealer has penetrated grout joints, remove excess sealer and sealer from tile faces by wiping with soft cloth.

B. Surface should be dry, clean and free of waxes, sealers or finishes. New installations need to be dry 48 hours before application. Protect surrounding surfaces. Test product in an inconspicuous area to ensure desirable results.

C. Pre-Grout Sealer/Grout Release:
   1. Porous tile and stone can be stained by grout during installation. Sealing the tile before grouting.
   2. Apply sealer according to directions after tile has been bonded for a minimum of 24 hours, or apply to front face of tile before installation.
   3. Wait a minimum of 2 hours before grouting.
   4. Allow 30 minutes drying time between applications.

D. Tile industry experts recommend periodic testing of sealed surfaces.
   1. Refer to Close-out Requirements regarding periodic resealing of porous tile and grout surfaces.

3.7 FIELD QUALITY CONTROL

A. Testing: Engage a qualified testing agency to perform the following field tests and inspections and prepare test reports:
   1. Samples of material delivered to Project site shall be taken, identified, sealed, and certified in presence of Contractor.
   2. Testing agency shall perform tests for characteristics specified, using applicable referenced testing procedures.

3.8 CLEANING

A. Clean tile and grout surfaces.

B. Remove and replace material that is stained or otherwise damaged or that does not match adjoining tile. Provide new matching units, installed as specified and in a manner to eliminate evidence of replacement.

C. Clean tiles after setting and grouting is complete; use procedures recommended by manufacturer for types of application indicated.
   1. Remove latex-Portland cement mortar (thin set) and polymer-modified tile grout residue from stone tile surfaces as soon as possible.
   2. Clean grout smears and haze from tile according to grout manufacturer's written instructions for the type of stone tile installed. Use only cleaners recommended by grout manufacturer and determine that cleaners are safe to use on installed tile and other surfaces by testing on samples of stone tile and other surfaces to be cleaned prior to using cleaners on installed materials. Protect metal surfaces, plumbing and electrical fixtures from effects of cleaning. Flush surfaces with clean water before and after cleaning.

3.9 PRODUCT MAINTENANCE

A. Do not use cleaners containing ammonia, acids or bleach. Use an appropriate neutral cleaner.

B. Prior to using any cleaning material on a tile, test a discrete area or scrap piece of tile to insure desired results.

3.10 PROTECTION

A. Do not permit traffic over finished floor surface for 4 days after installation.

B. Protect installed tile work with kraft paper or other heavy covering during construction period to prevent staining, damage, and wear. If recommended by tile manufacturer, apply coat of neutral protective cleaner to completed tile walls and floors.

C. Before final inspection, remove protective coverings and rinse neutral protective cleaner from tile surfaces.

3.11 CLOSEOUT ACTIVITIES

A. See Section 017800 - Closeout Procedures and Submittals, for closeout submittals.

END OF SECTION

SECTION 095100 - ACOUSTICAL CEILINGS

PART 1 GENERAL

1.1 SECTION INCLUDES

A. Suspended metal grid ceiling system.

B. Acoustical units.

C. Acoustical ceiling panels (Clouds).

1.2 RELATED REQUIREMENTS

1.3 REFERENCE STANDARDS

A. ASCE 7 - Minimum Design Loads and Associated Criteria for Buildings and Other Structures; Most Recent Edition Cited by Referring Code or Reference Standard.

B. ASTM A653/A653M - Standard Specification for Steel Sheet, Zinc-Coated (Galvanized) or Zinc-Iron Alloy-Coated (Galvannealed) by the Hot-Dip Process; 2020.

C. ASTM C635/C635M - Standard Specification for the Manufacture, Performance, and Testing of Metal Suspension Systems for Acoustical Tile and Lay-in Panel Ceilings; 2017.

D. ASTM C636/C636M - Standard Practice for Installation of Metal Ceiling Suspension Systems for Acoustical Tile and Lay-In Panels; 2019.

E. ASTM E84 - Standard Test Method for Surface Burning Characteristics of Building Materials; 2021a.

F. ASTM E580/E580M - Standard Practice for Installation of Ceiling Suspension Systems for Acoustical Tile and Lay-in Panels in Areas Subject to Earthquake Ground Motions; 2020.

G. ASTM E1264 - Standard Classification for Acoustical Ceiling Products; 2019.

1.4 ADMINISTRATIVE REQUIREMENTS

A. Sequence work to ensure acoustical ceilings are not installed until building is enclosed, sufficient heat is provided, dust generating activities have terminated, and overhead work is completed, tested, and approved.

B. Do not install acoustical units until after interior wet work is dry.

1.5 SUBMITTALS

A. See Section 013300 - Submittal Requirements for submittal procedures.

B. Shop Drawings: Indicate grid layout and related dimensioning.

C. Product Data: Provide data on suspension system components and acoustical units.

D. Manufacturer's Installation Instructions: Indicate special procedures and perimeter conditions requiring special attention.

1.6 QUALITY ASSURANCE

A. Designer Qualifications for Seismic Design: Perform under direct supervision of a Professional Structural Engineer experienced in design of this work and licensed at Nevada.

B. Suspension System Manufacturer Qualifications: Company specializing in manufacturing the products specified in this section with minimum three years documented experience.

C. Acoustical Unit Manufacturer Qualifications: Company specializing in manufacturing the products specified in this section with minimum three years documented experience.

1.7 FIELD CONDITIONS

A. Maintain uniform temperature of minimum 60 degrees F, and maximum humidity of 40 percent prior to, during, and after acoustical unit installation.

PART 2 PRODUCTS

2.1 MANUFACTURERS

A. Acoustic Tiles/Panels:
   1. Armstrong World Industries, Inc: www.armstrongceilings.com/#sle.
   2. CertainTeed Corporation: www.certainteed.com/ceilings-and-walls/#sle.
   3. Rockfon: www.rockfon.com/#sle.
   4. Basis of Design: USG Corporation: www.usg.com/ceilings/#sle.

B. Suspension Systems:
   1. Same as for acoustical units.

2.2 PERFORMANCE REQUIREMENTS

A. Seismic Performance: Ceiling systems designed to withstand the effects of earthquake motions determined according to ASCE 7 for Seismic Design Category D, E, or F and complying with the following:
   1. Local authorities having jurisdiction.

2.3 ACOUSTICAL UNITS

A. Acoustical Panels, Type C-1: Mineral fiber with membrane-faced overlay, with the following characteristics:
   1. Application(s): As indicated on Drawings.
   2. Classification: ASTM E1264 Type IV.
      a. Form: 2, water felted.
      b. Pattern: "E" - lightly textured.
   3. Size: 24 by 24 inches.
   4. Thickness: 3/4 inch.
   5. Panel Edge: Square.
   6. Color: White.
   7. Suspension System Type _____: Exposed grid.
   8. Products:
      a. USG Corporation; Mars Acoustical Panels: www.usg.com/ceilings/#sle.
      b. _____.

B. Acoustical Panels, Type C-2: Mineral fiber with scrubbable finish, with the following characteristics:
   1. Application(s): As indicated on Drawings.
   2. Classification: ASTM E1264 Type IX.
      a. Form: 1, nodular.
      b. Pattern: "G" - smooth.
   3. Size: 24 by 48 inches.
   4. Thickness: 3/4 inch.
   5. Panel Edge: Square.
   6. Color: White.
   7. Suspension System Type _____: Exposed grid.
   8. Products:
      a. USG Corporation; Kitchen Lay-In Panels: www.usg.com/ceilings/#sle.

2.4 SUSPENSION SYSTEM(S)

A. Metal Suspension Systems - General: Complying with ASTM C635/C635M; die cut and interlocking components, with perimeter moldings, hold down clips, stabilizer bars, clips, and splices as required.
   1. Materials:
      a. Steel Grid: ASTM A653/A653M, G30 coating, unless otherwise indicated.

B. Exposed Suspension System, Type G-1: Hot-dip galvanized steel grid and cap.
   1. Application(s): As indicated on Drawings.
   2. Structural Classification: Intermediate-duty, when tested in accordance with ASTM C635/C635M.
   3. Profile: Tee; 15/16 inch face width.
   4. Finish: Baked enamel.
   5. Products:
      a. USG Corporation; Donn Brand DX/DXL 15/16 inch Acoustical Suspension System: www.usg.com/ceilings/#sle.

2.5 ACCESSORIES

A. Support Channels and Hangers: Galvanized steel; size and type to suit application, seismic requirements, and ceiling system flatness requirement specified.

B. Hanger Wire: 12 gauge, 0.08 inch galvanized steel wire.

C. Hold-Down Clips: Manufacturer's standard clips to suit application.

D. Seismic Clips: Manufacturer's standard clips for seismic conditions and to suit application.

E. Perimeter Moldings: Same metal and finish as grid.
   1. Size: As required for installation conditions and specified Seismic Design Category.
   2. Angle Molding: L-shaped, for mounting at same elevation as face of grid.
   3. Gaskets For Perimeter Moldings: Closed-cell foam, factory-applied to molding.

F. Metal Edge Trim for "Cloud" Suspension Systems: Steel or extruded aluminum; provide attachment clips, splice plates, and preformed corner pieces for complete trim system.
   1. Trim Height: 6 inch.
   2. Finish: Baked enamel.

3. Color: _____.

G. Gypsum Board: Fire rated type; 5/8 inch thick, ends and edges square, paper faced.

H. Touch-up Paint: Type and color to match acoustical and grid units.

PART 3 EXECUTION

3.1 EXAMINATION

A. Verify existing conditions before starting work.

B. Verify that layout of hangers will not interfere with other work.

3.2 PREPARATION

A. Install after major above-ceiling work is complete.

B. Coordinate the location of hangers with other work.

C. Provide hanger clips during steel deck erection. Provide additional hangers and inserts as required.

3.3 INSTALLATION - SUSPENSION SYSTEM

A. Install suspension system in accordance with ASTM C636/C636M, ASTM E580/E580M, and manufacturer's instructions and as supplemented in this section.

B. Rigidly secure system, including integral mechanical and electrical components, for maximum deflection of 1:360.

C. Lay out system to a balanced grid design with edge units no less than 50 percent of acoustical unit size.

D. Perimeter Molding: Install at intersection of ceiling and vertical surfaces and at junctions with other interruptions.
1. Install in bed of acoustical sealant.
2. Use longest practical lengths.
3. Overlap and rivet corners.

E. Suspension System, Non-Seismic: Hang suspension system independent of walls, columns, ducts, pipes and conduit. Where carrying members are spliced, avoid visible displacement of face plane of adjacent members.

F. Seismic Suspension System, Seismic Design Categories D, E, F: Hang suspension system with grid ends attached to the perimeter molding on two adjacent walls; on opposite walls, maintain a 3/4 inch clearance between grid ends and wall.

G. Where ducts or other equipment prevent the regular spacing of hangers, reinforce the nearest affected hangers and related carrying channels to span the extra distance.

H. Do not support components on main runners or cross runners if weight causes total dead load to exceed deflection capability.

I. Support fixture loads using supplementary hangers located within 6 inches of each corner, or support components independently.

J. Do not eccentrically load system or induce rotation of runners.

K. Install light fixture boxes constructed of gypsum board above light fixtures in accordance with fire rated assembly requirements and light fixture ventilation requirements.

3.4 INSTALLATION - ACOUSTICAL UNITS

A. Install acoustical units in accordance with manufacturer's instructions.

B. Fit acoustical units in place, free from damaged edges or other defects detrimental to appearance and function.

C. Fit border trim neatly against abutting surfaces.

D. Install acoustical units level, in uniform plane, and free from twist, warp, and dents.

E. Cutting Acoustical Units:
   1. Cut to fit irregular grid and perimeter edge trim.
   2. Make field cut edges of same profile as factory edges.
   3. Double cut and field paint exposed reveal edges.

F. Where round obstructions occur, provide preformed closures to match perimeter molding.

G. Install hold-down clips on panels within 20 ft of an exterior door.

3.5 TOLERANCES

A. Maximum Variation from Flat and Level Surface: 1/8 inch in 10 feet.

B. Maximum Variation from Plumb of Grid Members Caused by Eccentric Loads: 2 degrees.

3.6 CLEANING

A. Clean surfaces.

B. Replace damaged or abraded components.

END OF SECTION

SECTION 096500 - RESILIENT FLOORING, WALL BASE AND ACCESSORIES

PART 1 GENERAL

1.1 SECTION INCLUDES

A. Static control resilient tile flooring.

B. LVT Plank Flooring.

C. Resilient base.

1.2 RELATED REQUIREMENTS

A. Section 033000 - Cast-in-Place Concrete: Restrictions on curing compounds for concrete slabs and floors to receive adhesive-applied resilient flooring.

B. Section 090561 - Common Work Results for Flooring Preparation: Concrete slab moisture and alkalinity testing and remediation procedures.

1.3 REFERENCE STANDARDS

A. ASTM D6329 - Standard Guide for Developing Methodology for Evaluating the Ability of Indoor Materials to Support Microbial Growth Using Static Environmental Chambers; 1998 (Reapproved 2015).

B. ASTM E648 - Standard Test Method for Critical Radiant Flux of Floor-Covering Systems Using a Radiant Heat Energy Source; 2019a, with Editorial Revision (2020).

C. ASTM F710 - Standard Practice for Preparing Concrete Floors to Receive Resilient Flooring; 2021.

D. ASTM F1066 - Standard Specification for Vinyl Composition Floor Tile; 2004 (Reapproved 2018).

E. ASTM F1861 - Standard Specification for Resilient Wall Base; 2021.

F. ASTM F2170 - Standard Test Method for Determining Relative Humidity in Concrete Floor Slabs Using in situ Probes; 2019a.

G. NFPA 253 - Standard Method of Test for Critical Radiant Flux of Floor Covering Systems Using a Radiant Heat Energy Source; 2019.

1.4 SUBMITTALS

A. See Section 013300 - Submittal Requirements, for submittal procedures.

B. Product Data: Provide data on specified products, describing physical and performance characteristics; including sizes, patterns and colors available; and installation instructions.
   1. Include information stating Static Coefficient of Friction.
   2. MSDS
      a. Submit Material Safety Data Sheets (MSDS) available for flooring products, adhesives, patching/leveling compounds, floor finishes (polishes) and cleaning agents.
   3. For resilient products. Use same designations indicated on Drawings.

C. Shop Drawings: Indicate seaming plans and floor patterns.

D. Verification Samples: Submit 4 samples, 6 by 6 inch in size illustrating color and pattern for each resilient product specified.

E. Concrete Subfloor Test Report: Submit a copy of the moisture and alkalinity (pH) test reports.

F. Certification: Prior to installation of flooring, submit written certification by flooring manufacturer and adhesive manufacturer that condition of subfloor is acceptable.

G. Maintenance Data: Include maintenance procedures, recommended maintenance materials, and suggested schedule for cleaning, stripping, and re-waxing.

H. Maintenance Materials: Furnish the following for Owner's use in maintenance of project.
   1. See Section 016000 - Product Requirements, for additional provisions.
   2. Extra Flooring Material: 100 square feet of each type and color.
   3. Extra Wall Base: 100 linear feet of each type and color.

1.5 QUALITY ASSURANCE

A. Manufacturer Qualifications: Company specializing in manufacturing specified flooring with minimum 10 years documented experience.

B. Installer Qualifications: Company specializing in installing specified flooring with minimum 5 years documented experience.

C. Testing Agency Qualifications: Independent firm specializing in performing concrete slab moisture testing and inspections of the type specified in this section.

1.6 QUALITY ASSURANCE AND REGULATORY REQUIREMENTS

A. Single-Source Responsibility: provide types of flooring and accessories supplied by one manufacturer, including leveling and patching compounds, and adhesives.

B. Select an installer who is competent in the installation of resilient and static dissipative resilient tile flooring.

C. Provide static dissipative resilient tile, static dissipative adhesive, copper grounding strips, and static dissipative floor finish supplied by the manufacturer.

D. Provide flooring material to meet the following fire test performance criteria as tested by a recognized independent testing laboratory:
   1. ASTM E648 Critical Radiant Flux of 0.45 watts per sq. cm. or greater, Class I.
   2. ASTM E662 (Smoke Generation) Maximum Specific Optical Density of 450 or less.

E. Provide flooring material to meet the following electrical properties when installed according to manufacturer’s instructions with the required adhesive:
   1. ANSI/ESD S7.1 :Floor Materials-Resistive Characterization of Materials results between 106 and 109 ohms
   2. ASTM F150 (Electrical Resistance of Flooring) between 106 and 109 ohms.
   3. ANSI/ESD STM 97.1: Floor Materials and Footwear-Resistance in Combination with a Person results between 106 and 109 ohms
   4. ANSI/ESD STM 97.2: Floor Materials and Footwear Voltage Measurement in Combination with a Person) - less than 10 volts with dissipative footwear at 20% relative humidity.

5. Static Dissipation @ 12% RH: Flooring in combination with a person wearing dissipative footwear - 1000 to 100 volts:0.2 seconds average

F. Slip resistance of floor surfaces and changes in level shall be in accordance with applicable law.

1.7 DELIVERY, STORAGE, AND HANDLING

A. Upon receipt, immediately remove any shrink-wrap and check materials for damage and the correct style, color, quantity and run numbers.

B. Store all materials off of the floor in an acclimatized, weather-tight space.

C. Maintain temperature in storage area between 55 degrees F and 90 degrees F.

D. Protect roll materials from damage by storing on end.

E. Do not double stack pallets.

1.8 FIELD CONDITIONS

A. Store materials for not less than 48 hours prior to installation in area of installation at a temperature of 70 degrees F to achieve temperature stability. Thereafter, maintain conditions above 55 degrees F.

B. Install flooring and accessories after the other finishing operations, including painting, have been completed. Close spaces to traffic during the installation of the flooring. Do not install flooring over concrete slabs until they are sufficiently dry to achieve a bond with the adhesive, in accordance with the manufacturer's recommended bond and moisture tests.

1.9 WARRANTY

A. See Section 01 78 36 - Warranties and Bonds, for additional warranty requirements.

B. Resilient Products:
   1. Resilient Base: Submit a written warranty executed by the manufacturer, agreeing to repair or replace resilient base that fails within the warranty period.

C. Warranty Period
   1. Warranty Period: 2 years

PART 2 PRODUCTS

2.1 MANUFACTURERS:

A. Basis of Design: Contract Documents are based on products specified below to establish a standard of quality. Other acceptable manufacturers with products having equivalent characteristics may be considered, provided deviations are minor and design concept expressed in Contract Documents is not changed, as determined by the Architect.
   1. Approved Manufacturer(s): Refer to Drawings and Material Schedules.
      a. As specified in this section for other products.

B. Substitutions: Refer to Section 012500 - Substitution Procedures.

2.2 TILE FLOORING

A. Static Control Tile - Type F-5: Homogeneous; color and pattern throughout thickness.

1. Manufacturers:
   a. Basis of Design: Armstrong Flooring Inc., 2500 Columbia Avenue, Lancaster, PA 17604, www.armstrongflooring.com/commercial
   b. Roppe Corporation; ESD Vinyl Static Control Tile: www.roppe.com/#sle.
   c. Or Approved Equal.
2. Basis of Design Product: Excelon SDT™ Static Dissipative Tile Flooring.
   a. Description: Static dissipative vinyl tile composed of polyvinyl chloride resin, plasticizers, fillers, pigments, and antistatic additive with colors and texture dispersed uniformly throughout its thickness.
   b. Tile shall meet size, thickness, indentation, impact, deflection, dimensional stability, resistance to chemicals, squareness, and resistance to heat requirements of ASTM F1066 Standard Specification for Vinyl Composition Tile, Class 2, through pattern.
3. Electrical Resistance:
   a. Dissipative Tile: Resistance between 1.0 megohms and 1000 megohms as tested in accordance with ASTM F150.
4. Critical Radiant Flux (CRF): Minimum 0.45 watt per square centimeter, when tested in accordance with ASTM E648 or NFPA 253.
5. Tile Size: 12 by 12 inch.
6. Total Thickness: 0.125 inch.
7. Color: As indicated on drawings.

B. Provide Armstrong S-202 Static Dissipative Tile Adhesive with 2 in. (5.08 cm) wide x 24 in. (60.96 cm) long copper ground-connection strips for under the tile and Armstrong S-725 Wall Base Adhesive at the wall base as recommended by the flooring manufacturer.

C. Priming:
   1. For priming porous substrates to aid in adhesive bond strength and reducing subfloor porosity, provide S-454 Prime Strong™ acrylic primer for porous substrates.

D. Provide transition/reducing strips tapered to meet abutting materials.

E. Provide Armstrong S-392 Static Dissipative Tile Polish for application as initial and on-going static dissipative maintenance finish.

F. Provide resilient edge strips of width shown on the drawings, of equal gauge to the flooring, homogeneous vinyl or rubber composition, tapered or bullnose edge, with color to match or contrast with the flooring, or as selected by the Architect from standard colors available.

2.3 RESILIENT BASE

A. Resilient Base Type B-1, B-2 : ASTM F1861, Type TP, rubber, thermoplastic; Group 1 top set Style A, Straight.
   1. Approved Manufacturers:
      a. Basis of Design: Armstrong Flooring: www.ArmstrongFlooring.com
   2. Acceptable Manufacturers:
      a. Johnsonite, a Tarkett Company: www.johnsonite.com.
      b. Or Approved Equal.
   3. Style: Sculpture 1.
   4. Height: 4.5 inch.
   5. Thickness: 0.125 inch.
   6. Finish: Satin.

7. Length: 4 foot sections.
8. Color: As indicated on drawings.
9. Accessories: Premolded external corners and internal corners.

2.4 TRANSITION AND EDGE STRIPS

A. Carpet Reducer 5/16"; Type T-1: Model #:144VS by Shaw Contract.
   1. Description: Thermoplastic Rubber Tile Carpet Reducer.
   2. This product is used to transition from carpet tile or broadloom to concrete or bare floor.

B. Resilient Carpet Reducer 1/8"; Type T-2: Model #:146VS by Shaw Contract.
   1. Description: Thermoplastic Rubber Tile Carpet Reducer.
   2. This product is used to transition from carpet tile or broadloom to LVT

C. Tile Carpet Reducer 1/8"; Type T-3: Model #:143VS by Shaw Contract.
   1. Description: Thermoplastic Rubber Tile Carpet Reducer.
   2. This product is used when transitioning from LVT to carpet tile or broadloom, just like the Resilient Carpet Reducer 1?8” but it is wider and made specifically for 1?8” (0.125”) thick LVT.

D. Type TR-4: Schluter®-RENO-T.
   1. Description: T-shaped profile with 1/16" (1 mm) thick beveled exposed surface and 11/32" (9 mm) tall integrated vertical anchoring leg.
   2. This product is used to provide transitions between same-height, hard-surface floor coverings
   3. Material and Finish:
      a. E - Stainless Steel Type 304 = V2A
   4. Width:
      a. 1" (25 mm)

2.5 ACCESSORIES

A. Subfloor Filler: White premix latex; type recommended by adhesive material manufacturer.

B. Primers, Adhesives, and Seam Sealer: Waterproof; types recommended by flooring manufacturer.

C. Adhesive for Vinyl Flooring: : Solvent free no VOC as recommended by manufacturer.

D. Copper Grounding Strips: Type and size as recommended by static control flooring manufacturer.

E. Filler for Coved Base: Plastic.

PART 3 EXECUTION

3.1 EXAMINATION

A. Verify that surfaces are flat to tolerances acceptable to flooring manufacturer, free of cracks that might telegraph through flooring, clean, dry, and free of curing compounds, surface hardeners, and other chemicals that might interfere with bonding of flooring to substrate.

B. Verify that wall surfaces are smooth and flat within the tolerances specified for that type of work, are dust-free, and are ready to receive resilient base.

C. Cementitious Subfloor Surfaces: Verify that substrates are ready for resilient flooring installation by testing for moisture and alkalinity (pH).
   1. Test in accordance with Section 090561.
   2. Obtain instructions if test results are not within limits recommended by resilient flooring manufacturer and adhesive materials manufacturer.
   3. Follow moisture and alkalinity remediation procedures in Section 090561.

D. Verify that required floor-mounted utilities are in correct location.

3.2 PREPARATION

A. Prepare floor substrates for installation of flooring in accordance with Section 090561.

3.3 INSTALLATION - GENERAL

A. Starting installation constitutes acceptance of subfloor conditions.

B. Install in accordance with manufacturer's written instructions.

C. Adhesive-Applied Installation:
   1. Spread only enough adhesive to permit installation of materials before initial set.
   2. Place copper grounding strip in conductive adhesive and apply additional adhesive to top side of strip before installing static control flooring. Allow strip to extend beyond flooring in accordance with static control flooring manufacturer's instructions. Refer to Section 260526 for grounding and bonding to building grounding system.
   3. Fit joints and butt seams tightly.
   4. Set flooring in place, press with heavy roller to attain full adhesion.

D. Where type of floor finish, pattern, or color are different on opposite sides of door, terminate flooring under centerline of door.

E. Install edge strips at unprotected or exposed edges, where flooring terminates, and where indicated.
   1. Metal Strips: Attach to substrate before installation of flooring using stainless steel screws.
   2. Resilient Strips: Attach to substrate using adhesive.

F. Scribe flooring to walls, columns, cabinets, floor outlets, and other appurtenances to produce tight joints.

3.4 INSTALLATION - LVT FLOORING

A. Install flooring in strict accordance with the latest edition of Armstrong Flooring Guaranteed Installation Systems manual, F-5061. Failure to comply may result in voiding the manufacturer’s warranty listed in Section 1.08.

B. Install flooring wall to wall before the installation of floor-set cabinets, casework, furniture, equipment, movable partitions, etc. Extend flooring into toe spaces, door recesses, closets, and similar openings as shown on the drawings.

C. If required, install flooring on pan-type floor access covers. Maintain continuity of color and pattern within pieces of flooring installed on these covers. Adhere flooring to the subfloor around covers and to covers.

D. Scribe, cut, and fit to permanent fixtures, columns, walls, partitions, pipes, outlets, and built-in furniture and cabinets.

E. Roll with a 100-pound (45.36 kilogram) roller in the field areas. Refer to specific rolling instructions of the flooring manufacturer

F. Install flooring with adhesives, tools, and procedures in strict accordance with the manufacturer's written instructions. Observe the recommended adhesive trowel notching, open times, and working times.

3.5 INSTALLATION - RESILIENT BASE

A. Fit joints tightly and make vertical. Maintain minimum dimension of 18 inches between joints.

B. Miter internal corners. At external corners, use premolded units. At exposed ends, use premolded units.

C. Install base on solid backing. Bond tightly to wall and floor surfaces.

D. Scribe and fit to door frames and other interruptions.

3.6 CLEANING

A. Remove excess adhesive from floor, base, and wall surfaces without damage.

B. Clean in accordance with manufacturer's written instructions.

3.7 PROTECTION

A. Prohibit traffic on resilient flooring for 48 hours after installation.

END OF SECTION

SECTION 096566 - RESILIENT ATHLETIC FLOORING

PART 1 GENERAL

1.1 SECTION INCLUDES

A. Rubber sheet flooring, adhesively installed.

B. Painted game lines.

1.2 RELATED REQUIREMENTS

A. Section 090561 - Common Work Results for Flooring Preparation: Removal of existing floor coverings, cleaning, and preparation.

1.3 REFERENCE STANDARDS

A. ASTM D412 - Standard Test Methods for Vulcanized Rubber and Thermoplastic Elastomers--Tension; 2016 (Reapproved 2021).

B. ASTM D2240 - Standard Test Method for Rubber Property--Durometer Hardness; 2015 (Reapproved 2021).

C. DIN EN 14904 - Surfaces for Sports Areas – Indoor Surfaces for Multi-Sports Use – Specification; 2006.

1.4 ADMINISTRATIVE REQUIREMENTS

A. Preinstallation Meeting: Convene a preinstallation meeting one week before starting work of this section; _____ attendance by all affected installers; review preparation and installation procedures and coordination and scheduling necessary for related work.

1.5 SUBMITTALS

A. See Section 013300 - Submittal Requirements, for submittal procedures.

B. Product Data: Manufacturer's printed data sheets for products specified.

C. Shop Drawings: Fabrication and installation details, and layout, colors, and widths of game lines and equipment locations.

D. Selection Samples: Manufacturer's color charts for flooring materials specified and game line paints, indicating full range of colors and textures available.

E. Test Reports: Submit test reports showing compliance with DIN EN 14904.

F. Concrete Subfloor Test Report: Submit a copy of the moisture and alkalinity (pH) test reports.

G. Manufacturer's Instructions: Indicate standard and special installation procedures.

H. Installer's qualification statement.

I. Maintenance Materials: Furnish the following for Owner's use in maintenance of project.
   1. See Section 016000 - Product Requirements, for additional provisions.
   2. Extra Flooring Material: 10 square yards matching installed flooring.

1.6 QUALITY ASSURANCE

A. Manufacturer Qualifications: Company specializing in manufacturing products specified in this section, with at least three years of documented experience.

B. Installer Qualifications: Company specializing in performing work of the type specified and with at least three years of documented experience.

1.7 DELIVERY, STORAGE, AND HANDLING

A. See Section 017419 - Construction Waste Management and Disposal for packaging waste requirements.

B. Deliver materials to project site in unopened containers clearly labeled with manufacturer's name and identification of contents.

C. Store materials in dry and clean location until needed for installation. During installation, handle in a manner that will prevent marring and soiling of finished surfaces.

1.8 FIELD CONDITIONS

A. Maintain temperature in spaces to receive adhesively installed resilient flooring within range of 70 to 95 degrees F for not less than 48 hours before the beginning of installation and for not less than 48 hours after installation has been completed. Subsequently, do not allow temperature in installed spaces to drop below 50 degrees F or to go above 100 degrees F.

PART 2 PRODUCTS

2.1 PREFORMED ATHLETIC FLOORING

A. Vinyl Sheet Flooring:
   1. Wearing Surface: Pure polyvinyl chloride, mechanically extruded and uniformly resilient material with uniform color throughout thickness.
   2. Backing: None.
   3. VOC Content: Certified as Low Emission by one of the following :
   4. Sheet Thickness: Minimum 9/32 inch, nominal.
   5. Sheet Width: Minimum 48 inches.
   6. Sheet Lengths: As necessary to minimize transverse seams.
   7. Tensile Strength: Minimum 1000 psi, per ASTM D412.
   8. Durometer Hardness, Type A: Minimum of 65, when tested in accordance with ASTM D2240.
   9. Seaming Method: Welding with heat or chemical.
   10. Surface Texture: Smooth.
   11. Color: As selected from manufacturer's standard range.
   12. Game Lines: Paint as approved by manufacturer of vinyl sheet flooring.
   13. Top Coat: If required by manufacturer for additional UV protection, a clear polyurethane coating that protects game lines and wearing surface.
   14. Products:
      a. Basis of Design: Gerflor USA, Inc; Taraflex Multi-Use 6.2: www.gerflorusa.com/#sle.

2.2 ACCESSORIES

A. Leveling Compound: Latex-modified cement formulation as recommended by flooring manufacturer for substrate conditions.

B. Flooring Adhesive: Waterproof; types recommended by flooring manufacturer.

PART 3 EXECUTION

3.1 EXAMINATION

A. Examine substrates for conditions detrimental to installation of athletic flooring. Proceed with installation only after unsatisfactory conditions have been corrected.

B. Verify that surfaces are flat to tolerances acceptable to flooring manufacturer, free of cracks that might telegraph through flooring, clean, dry, and free of curing compounds, surface hardeners, and other chemicals that might interfere with bonding of athletic flooring to substrate.

C. Cementitious Subfloor Surfaces: Verify that substrates are ready for resilient flooring installation by testing for moisture and alkalinity (pH).
   1. Test in accordance with Section 090561.
   2. Obtain instructions if test results are not within limits recommended by resilient flooring manufacturer and adhesive materials manufacturer.

3.2 PREPARATION

A. Prepare floor substrates for installation of flooring in accordance with Section 090561.

3.3 INSTALLATION

A. Starting installation constitutes acceptance of subfloor conditions.

B. Install in accordance with manufacturer's written instructions.

C. Resilient Sheet Flooring:
   1. Unroll flooring and allow to relax before beginning installation.
   2. Mix adhesive thoroughly and apply to substrate with notched trowel. Roll flooring into fresh adhesive, overlapping end seams and double cutting, butting factory edges and compression fitting.
   3. Roll entire flooring surface with steel roller to assure adhesion to substrate and eliminate air bubbles.
   4. Immediately remove any adhesive from flooring surface, using chemical recommended by flooring manufacturer.
   5. Weld seams using techniques and equipment recommended by manufacturer.
   6. Lay out game lines using tape and taping machine approved by flooring manufacturer. Apply game line paint with roller, and allow to dry before removing tape.
   7. Apply transparent top coat over flooring if recommended by manufacturer, to achieve a uniform finished appearance.

3.4 CLEANING

A. Clean flooring using methods recommended by manufacturer.

3.5 PROTECTION

A. Protect finished athletic flooring from construction traffic to ensure that it is without damage upon Date of Substantial Completion.

END OF SECTION

SECTION 096723 - RESINOUS FLOORING SYSTEMS

PART 1 GENERAL

1.1 SUMMARY

A. This section includes the following:
   1. Resinous flooring system as shown on the drawings and in schedules

1.2 SYSTEM DESCRIPTION

A. The work shall consist of preparation of the substrate, the furnishing and application of a cementitious urethane based self-leveling seamless flooring system with decorative chip broadcast and Epoxy broadcast and topcoats.

B. The system shall have the color and texture as specified by the Owner with a nominal thickness of 3/16 inch. It shall be applied to the prepared area(s) as defined in the plans strictly in accordance with the Manufacturer's recommendations.

C. Coved seamless wall base.

1.3 RELATED REQUIREMENTS

A. Section 033000 - Cast-in-Place Concrete.

B. Section 079200 - Joint Sealants.

C. Section 090561 - Common Work Results for Flooring Preparation.

1.4 REFERENCE STANDARDS

A. ASTM D4541 - Standard Test Method for Pull-Off Strength of Coatings Using Portable Adhesion Testers; 2017.

B. ANSI/ESD STM7.1 - The Protection of Electrostatic Discharge Susceptible Items Flooring Systems Resistive Characterization; 2021.

C. ASTM D570 - Standard Test Method for Water Absorption of Plastics; 1998 (Reapproved 2018).

D. ASTM D638 - Standard Test Method for Tensile Properties of Plastics; 2014.

E. ASTM D695 - Standard Test Method for Compressive Properties of Rigid Plastics; 2015.

F. ASTM E96/E96M - Standard Test Methods for Gravimetric Determination of Water Vapor Transmission Rate of Materials; 2021.

G. ASTM F710 - Standard Practice for Preparing Concrete Floors to Receive Resilient Flooring; 2021.

H. ASTM F1869 - Standard Test Method for Measuring Moisture Vapor Emission Rate of Concrete Subfloor Using Anhydrous Calcium Chloride; 2016a.

I. ASTM F2170 - Standard Test Method for Determining Relative Humidity in Concrete Floor Slabs Using in situ Probes; 2019a.

J. ICRI 310.2R - Selecting and Specifying Concrete Surface Preparation for Sealers, Coatings, Polymer Overlays, and Concrete Repair; 2013.

1.5 SUBMITTALS

A. See Section 013300 - Submittal Requirements, for submittal requirements.

B. Product Data: Submit manufacturer's technical data, installation instructions, and general recommendations for each resinous flooring material required. Include certification indicating compliance of materials with requirements.

C. Surfacing applicator shall submit samples of color and textures for Architect's approval.

D. Samples: Submit, for verification purposes, 6 x 6 inch square samples of each type of resinous decking required, applied to a rigid backing, in color and finish indicated.
   1. For initial selection of colors and finishes, submit manufacturer's color charts showing full range of colors and finishes available.

E. Prior to commencing work, at architect’s discretion, applicator shall install a 100 square foot sample on the job of desired color and texture and when approved, this will serve as the standard for the entire project.

1.6 QUALITY ASSURANCE

A. Single Source Responsibility: Obtain primary resinous flooring materials including primers, resins, hardening agents, finish or sealing coats from a single manufacturer with not less than ten years of successful experience in manufacturing and installing principal materials described in this section. Contractor shall have completed at least five projects of similar size and complexity; Stonhard or approved equal. Provide secondary materials only of type and from source recommended by manufacturer of primary materials.

B. Surfacing shall be applied by a surfacing applicator approved by the Architect, with a minimum of seven (7) years experience installing the brand of surfacing in similar size and function projects. A list of ten (10) completed projects using the specified materials must be submitted proving seven (7) years experience by the lead mechanic.

C. Surfacing applicator shall provide to the architect a completed list of jobs including the names of the Architect, General Contractor, and Owner, telephone numbers of all concerned, materials used, quantity installed and date completed on similar projects.

D. Surfacing applicator must provide a written joint guarantee for materials and workmanship between applicator and surfacing manufacturer for one (1) year.

E. Surfacing applicator or manufacturer seeking approval of products other than what is specified must supply samples, full product information, technical data with specifications, certification from an independent testing laboratory that the product being submitted for approval meets all requirements of the performance properties specified within this specification, installation instructions and comply with the above quality assurances in writing fourteen (14) days before bid letting.
   1. Omission of any item will result in an automatic rejection.
   2. Bidders will be notified by addendum of substitute surfacing materials, if approved.

F. Static Coefficient of Friction: Provide floor products and finished floor installations with a wet and dry static coefficient of friction of 0.6 minimum for level surfaces and treads of stairs and 0.8 minimum for ramp surfaces as tested.

1.7 DELIVERY, STORAGE AND HANDLING

A. Material shall be delivered to job site and checked by flooring contractor for completeness and shipping damage prior to job start.

B. All materials used shall be factory pre-weighed and pre-packaged in single, easy to manage batches to eliminate on site mixing errors. No on site weighing or volumetric measurements allowed.

C. Material shall be stored in a dry, enclosed area protected from exposure to moisture. Temperature of storage area shall be maintained between 60 and 85°F/16 and 30°C.

D. Material temperatures shall be a minimum of 55°F before use.

E. Work on seamless flooring shall not commence until the building can be maintained at a minimum temperature of 55 °F for 48 hours before, during and 48 hours after application. Areas shall also be broom clean and reasonably dust free and shall have adequately controlled ventilation with bright, uniform lighting.

1.8 PROJECT CONDITIONS

A. Before commencing work, ensure environmental and site conditions are suitable for application and curing.

B. Site Requirements
   1. Application may proceed while air, material and substrate temperatures are between 60 F and 85 F providing the substrate temperature is above the dew point. Outside of this range, the Manufacturer shall be consulted.
   2. The relative humidity in the specific location of the application shall be less than 85 % and the surface temperature shall be at least 5 F above the dew point.
   3. The Applicator shall ensure that adequate ventilation is available for the work area. This shall include the use of manufacturer's approved fans, smooth bore tubing and closure of the work area.
   4. The Applicator shall be supplied with adequate lighting equal to the final lighting level during the preparation and installation of the system.

C. Conditions of new concrete to be coated with cementitious urethane material.
   1. Concrete shall be moisture cured for a minimum of 3 days and have fully cured a minimum of 5 days in accordance with ACI-308 prior to the application of the coating system pending moisture tests.
   2. Concrete shall have a flat rubbed finish, float or light steel trowel finish (a hard steel trowel finish is neither necessary nor desirable).
   3. Sealers and curing agents should not to be used.
   4. Concrete shall have minimum design strength of 3.500 psi. and a maximum water/cement ratio of 0.45
   5. Concrete surfaces on grade shall have been constructed with a vapor barrier to protect against the effects of vapor transmission and possible delamination of the system.

D. Safety Requirements
   1. All open flames and spark-producing equipment shall be removed from the work area prior to commencement of application.
   2. "No Smoking" signs shall be posted at the entrances to the work area.

3. The Owner shall be responsible for the removal of foodstuffs from the work area.
4. Non-related personnel in the work area shall be kept to a minimum.

1.9 PROTECTION

A. Protect adjacent surfaces from damage resulting from work of this trade. If necessary, mask and/or cover adjacent surfaces, fixtures, cabinet work, equipment, etc. by suitable means.

1.10 WARRANTY

A. See Section 017836 - Warranties and Bonds, for additional warranty requirements.

B. Dur-A-Flex, Inc. warrants that material shipped to buyers at the time of shipment substantially free from material defects and will perform substantially to Dur-A-Flex, Inc. published literature if used in accordance with the latest prescribed procedures and prior to the expiration date.

C. Dur-A-Flex, Inc. liability with respect to this warranty is strictly limited to the value of the material purchase.

PART 2 PRODUCTS

2.1 MANUFACTURER:

A. Basis of Design: Contract Documents are based on products specified below to establish a standard of quality. Other acceptable manufacturers with products having equivalent characteristics may be considered, provided deviations are minor and design concept expressed in Contract Documents is not changed, as determined by the Architect.
   1. Dur-A-Flex, Inc., 95 Goodwin Street, East Hartford, CT 06108, Phone: (860) 528-9838, Fax: (860) 528-2802

B. Acceptable Manufacturers: Subject to compliance with requirements of Contract Documents, provide product by one of manufacturers listed alphabetically below. If not listed. submit as substitution according to Conditions of the Contract and Division 1 Sections.
   1. Stonhard, 1000 East Park Avenue, Maple Shade, NJ 08052, 800.257.7953
   2. Flowcrete Americas, which is located at: 616 Spring Hill Dr. Suite 100; Spring, TX 77386; Tel: 936 539 6700; Fax: 936 539 6701; Email: request; Web:www.flowcreteamericas.com.

C. Substitutions: Refer to Section 012500 - Substitution Procedures.

2.2 MATERIALS:

A. Type F-4: Dur-A-Flex, Inc, Dur-A-Chip, Epoxy-Based seamless flooring system

B. System Materials:
   1. Primer: Dur-A-Flex, Inc, Dur-A-Glaze #4 WB resin and hardener.
   2. First Broadcast Coat: Dur-A-Flex, Inc, Dur-A-Gard OPF resin and hardener.
      a. Chips: Dur-A-Flex, Inc. Macro Decorative Colored Chips.
   3. Second Broadcast and Grout Coat: Dur-A-Flex, Inc. Dur-A-Glaze #4 resin and Water Clear hardener.
      a. Chips: Dur-A-Flex, Inc. Macro Decorative Colored Chips.
   4. Grout coat: Dur-A-Flex, Inc. Dur-A-Glaze #4 resin and Water Clear hardener.
   5. Topcoat: Dur-A-Flex, Inc. Armor Top resin, hardener and grit.
   6. Patch Materials

a. Shallow Fill and Patching: Use Dur-A-Flex, Inc. Dur-A-Glaze #4 Cove Rez.
b. b. Deep Fill and Sloping Material (over ¼ inch): Use Dur-A-Flex, Inc. Dur-A-Crete.

C. Cove Base - Type B-2: Provide 6" high turned up coved base with 1" radius cove as indicated on drawings, for an integral seal at the joint between the floor and the wall.

2.3 PRODUCT REQUIREMENTS

A.	Primer	Dur-A-Glaze #4 WB
1.	Percent Solids	56 %
2.	VOC	2 g/L
3.	Bond Strength to Concrete ASTM D 4541	550 psi, substrates fails
4.	Hardness, ASTM D 3363	3H
5.	Elongation, ASTM D 2370	9 %
6.	Flexibility (1/4: Cylindrical mandrel), ASTM D 1737	Pass
7.	Impact Resistance, MIL D-2794	>160
8.	Abrasion Resistance ASTM D 4060, CS 17 wheel, 1,000 g Load	30 mg loss
B.	Broadcast Coat	Dur-A-Gard OPF
1.	Percent Solids	100 %
2.	VOC	59 g/L
3.	Compressive Strength, ASTM D 695	16,000 psi
4.	Tensile Strength, ASTM D 638	3,800 psi
5.	Flexural Strength, ASTM D 790	4,000 psi
6.	Abrasion Resistance, ASTM D 4060 C-10 Wheel, 1,000 gm load, 1,000 cycles	35 mg loss
7.	Flame Spread/NFPA-101, ASTM E 84	Class A
8.	Impact Resistance MIL D-3134	0.025 inch Max
9.	Water Absorption. MIL D-3134	Pass
10.	Potlife @ 70 F minutes	20-25
C.	C. Broadcast Coat and Grout Coat	Dur-A-Glaze #4 Water Clear
1.	Percent Solids	100 %
2.	VOC	3.8 g/L
3.	Compressive Strength, ASTM D 695	11,200 psi
4.	Tensile Strength, ASTM D 638	2,100 psi
5.	Flexural Strength, ASTM D 790	5,100 psi
6.	Abrasion Resistance, ASTM D 4060 C-10 Wheel, 1,000 gm load, 1,000 cycles	29 mg loss
7.	Flame Spread/NFPA-101, ASTM E 84	Class A
8.	Impact Resistance MIL D-24613	0.0007 inches, no cracking or delamination
9.	Water Absorption. MIL D-24613	Nil
10.	Potlife @ 70 F	20 minutes
D.	Topcoat	Armor Top
1.	Percent Solids	95 %
2.	VOC	0 g/L
3.	Tensile Strength, ASTM D 2370	7,000 psi

4. Adhesion, ASTM 4541		Substrate Failure
5. Hardness, ASTM D 3363		4H
6. 600 Gloss ASTM D 523		70
7. Abrasion Resistance, ASTM D4060	Gloss	Satin
a. CS 17 wheel (1,000 g load) 1,000 cycles	4	8 mg loss with grit
	10	12 mg loss without grit
8. Pot Life, 70 F, 50% RH		2 Hours
9. Full Chemical Resistance		7 days

PART 3 - EXECUTION

3.1 EXAMINATION

A. Examine substrates, areas and conditions, with Applicator present, for compliance with requirements for maximum moisture content, installation tolerances and other conditions affecting flooring performance.

B. Verify that substrates and conditions are satisfactory for flooring installation and comply with requirements specified.

3.2 PREPARATION

A. General
1. New and existing concrete surfaces shall be free of oil, grease, curing compounds, loose particles, moss, algae growth, laitance, friable matter, dirt, and bituminous products.
2. Moisture Testing: Perform tests recommended by manufacturer and as follows.
a. Perform anhydrous calcium chloride test ASTM F1869. Application will proceed only when the vapor/moisture emission rates from the slab is less than and not higher than 20 lbs/1,000 sf/24 hrs.
b. Perform relative humidity test using is situ probes, ASTM F2170. Proceed with installation only after substrates have a maximum 99% relative humidity level measurement.
c. If the vapor drive exceeds 99% relative humidity or 20 lbs/1,000 sf/24 hrs then the Owner and/or Engineer shall be notified and advised of additional cost for the possible installation of a vapor mitigation system that has been approved by the manufacturer or other means to lower the value to the acceptable limit.
3. Mechanical surface preparation
a. Shot blast all surfaces to receive flooring system with a mobile steel shot, dust recycling machine (Blastrac or equal). All surface and embedded accumulations of paint, toppings hardened concrete layers, laitance, power trowel finishes and other similar surface characteristics shall be completely removed leaving a bare concrete surface having a minimum profile of CSP 4-5 as described by the International Concrete Repair Institute.
b. Floor areas inaccessible to the mobile blast machines shall be mechanically abraded to the same degree of cleanliness, soundness and profile using diamond grinders, needle guns, bush hammers, or other suitable equipment.
c. Where the perimeter of the substrate to be coated is not adjacent to a wall or curb, a minimum 1/4 inch key cut shall be made to properly seat the system, providing a smooth transition between areas. The

   d. Cracks and joints (non-moving) greater than 1/8 inch wide are to be chiseled or chipped-out and repaired per manufacturer's recommendations.
4. At spalled or worn areas, mechanically remove loose or delaminated concrete to a sound concrete and patch per manufactures recommendations.

3.3 APPLICATION

A. General
   1. The system shall be applied in five distinct steps as listed below:
      a. Substrate preparation
      b. Topping/overlay application with chip broadcast.
      c. Resin application with chip broadcast.
      d. Topcoat application
      e. Second topcoat application.
   2. Immediately prior to the application of any component of the system, the surface shall be dry and any remaining dust or loose particles shall be removed using a vacuum or clean, dry, oil-free compressed air.
   3. The handling, mixing and addition of components shall be performed in a safe manner to achieve the desired results in accordance with the Manufacturer's recommendations.
   4. The system shall follow the contour of the substrate unless pitching or other leveling work has been specified by the Architect.
   5. A neat finish with well-defined boundaries and straight edges shall be provided by the Applicator.

B. Primer
   1. The primer shall be Dur-A-Glaze #4 WB Primer that is mixed at the ratio of 1 part resin to 4 parts hardener per the manufacturer's instructions.
   2. The primer shall be applied by 1/8 inch notched squeegee and back rolled at the rate of 200 sf/gal to yield a dry film thickness of 4 mils.

C. Broadcast
   1. The broadcast coat shall be applied as a double broadcast system as specified by the Architect.
   2. The broadcast coat shall be comprised of two components, a resin, and hardener as supplied by the Manufacturer and mixed in the ratio of 2 parts resin to 1 part hardener.
   3. The resin shall be added to the hardener and thoroughly mixed by suitably approved mechanical means.
   4. The first broadcast coat shall be applied over horizontal surfaces using the dip and roll, and back roll method at the rate of 300 sf/gal using the Dur-A-Gard OPF material.
   5. Chips shall be broadcast to excess into the wet material, Macro chips at the rate of 0.1 lbs/sf.
   6. Allow material to fully cure. Vacuum, sweep and/or blow to remove all loose aggregate.
   7. Scrape the floor with a trowel or floor scraper. Sweep and vacuum the floor again.
   8. Apply a second broadcast coat of resin shall be applied by flat squeegee then back rolled with a coverage rate of 150 sf/gal with the Dur-A-Glaze #4 Water Clear epoxy.
   9. Chips shall be broadcast to excess, Macro chips at the rate of 0.1 lbs/sf.
   10. Allow material to fully cure. Vacuum, sweep and/or blow to remove all loose chips.
   11. Scrape the floor with a trowel or floor scraper. Sweep and vacuum the floor again.

D. Grout Coat

1. The grout coat shall be comprised of a Dur-A-Glaze # 4 Water Clear epoxy that is mixed in the ratio of 1 part hardener to 2 parts resin and installed per the manufacturer's recommendations.
2. The grout coat shall be squeegee applied and back rolled with a coverage rate of 100 sf/gal.

E. Topcoat
1. The topcoat of Armor Top shall be roller applied at the rate of 500 sf/gal to yield a dry film thickness of 3 mils.
2. The finish floor will have a nominal thickness of 60 mils.

3.4 FIELD QUALITY CONTROL

A. Tests, Inspection
1. The following tests shall be conducted by the Applicator:
   a. Temperature
      1) Air, substrate temperatures and, if applicable, dew point.
   b. Coverage Rates
      1) Rates for all layers shall be monitored by checking quantity of material used against the area covered.

3.5 CLEANING AND PROTECTION

A. Cure flooring material in compliance with manufacturer's directions, taking care to prevent their contamination during stages of application and prior to completion of the curing process.
1. Remove masking. Perform detail cleaning at floor termination, to leave cleanable surface for subsequent work of other sections.

END OF SECTION

SECTION 096813 - TILE CARPETING

PART 1 GENERAL

1.1 SECTION INCLUDES

A. Carpet tile, fully adhered.

1.2 RELATED REQUIREMENTS

A. Section 033000 - Cast-in-Place Concrete: Restrictions on curing compounds for concrete slabs and floors to receive adhesive-applied flooring.

B. Section 090561 - Common Work Results for Flooring Preparation: Concrete slab moisture and alkalinity testing and remediation procedures.

C. Section 096500 - Resilient Flooring, Wall Base and Accessories for resilient base, reducer strips, and other accessories installed with carpet.

1.3 REFERENCE STANDARDS

A. ASTM D2859 - Standard Test Method for Ignition Characteristics of Finished Textile Floor Covering Materials; 2016 (Reapproved 2021).

B. ASTM E648 - Standard Test Method for Critical Radiant Flux of Floor-Covering Systems Using a Radiant Heat Energy Source; 2019a, with Editorial Revision (2020).

C. ASTM F710 - Standard Practice for Preparing Concrete Floors to Receive Resilient Flooring; 2021.

D. ASTM F1869 - Standard Test Method for Measuring Moisture Vapor Emission Rate of Concrete Subfloor Using Anhydrous Calcium Chloride; 2016a.

E. ASTM F2170 - Standard Test Method for Determining Relative Humidity in Concrete Floor Slabs Using in situ Probes; 2019a.

F. CRI 104 - Standard for Installation of Commercial Carpet; 2015.

G. CRI (GLP) - Green Label Plus Testing Program - Certified Products; Current Edition.

H. NFPA 253 - Standard Method of Test for Critical Radiant Flux of Floor Covering Systems Using a Radiant Heat Energy Source; 2019.

1.4 SUBMITTALS

A. See Section 013000 - Administrative Requirements, for submittal procedures.

B. Product Data: Provide data on specified products, describing physical and performance characteristics; sizes, patterns, colors available, and method of installation.

C. Shop Drawings: Indicate layout of joints.

D. Samples: Submit two carpet tiles illustrating color and pattern design for each carpet color selected.

E. Manufacturer's Installation Instructions: Indicate special procedures and perimeter conditions requiring special attention.

F. Concrete Subfloor Test Report: Submit a copy of the moisture and alkalinity (pH) test reports.

G. Testing: Verification elevator cab flooring meets ASTM E648 - Standard Test Method for Critical Radiant Flux Floor Covering Systems.

H. Installer's Qualification Statement.

I. Operation and Maintenance Data: Include maintenance procedures, recommended maintenance materials, and suggested schedule for cleaning.

J. Maintenance Materials: Furnish the following for Owner's use in maintenance of project.
   1. See Section 01 6000 - Material and Equipment, for additional provisions.
   2. Extra Carpet Tiles: Quantity equal to 5 percent of total installed of each color and pattern installed, but not less than 10 sq. yd.

1.5 QUALITY ASSURANCE

A. Manufacturer Qualifications: Company specializing in manufacturing specified carpet tile with minimum 10 years documented experience.

B. Installer Qualifications: Company specializing in installing carpet tile with minimum 5 years documented experience and approved by carpet tile manufacturer.

1.6 PROJECT CONDITIONS

A. Store materials in area of installation for minimum period of 24 hours prior to installation.

B. Comply with CRI 104, Section 7.2, "Site Conditions? Temperature and Humidity" and Section 7.12,"Ventilation”.

C. Environmental Limitations: Do not install entry mat carpet tiles until wet work in spaces is complete and dry, and ambient temperature and humidity conditions are maintained at the levels indicated for Project when occupied for its intended use.

1.7 DELIVERY, STORAGE, AND HANDLING

A. Comply with CRI 104, Section 5, "Storage and Handling."

1.8 WARRANTY

A. Special Warranty for Entry Mat Carpet Tiles: Manufacturer's standard form in which manufacturer agrees to repair or replace components of carpet tile installation that fail in materials or workmanship within specified warranty period.
   1. Warranty does not include deterioration or failure of carpet tile due to unusual traffic, failure of substrate, vandalism, or abuse.
   2. Warranty Period: Start at date of Substantial Completion.

PART 2 PRODUCTS

2.1 MANUFACTURERS

A. Basis of Design: Contract Documents are based on products specified below to establish a standard of quality. Other acceptable manufacturers with products having equivalent

characteristics may be considered, provided deviations are minor and design concept expressed in Contract Documents is not changed, as determined by the Architect.

1. Approved Manufacturer(s): Refer to Drawings and Material Schedules.
   a. As specified in this section for other products.
2. Modular Carpeting: Tandus Centiva, a Tarkett Company: www.commercial.tarkett.com
   a. Interface, Inc: www.interfaceinc.com.

B. Acceptable Manufacturers: Subject to compliance with requirements of Contract Documents, provide product by one of manufacturers listed alphabetically below. If not listed, submit as substitution according to Conditions of the Contract and Division 1 Sections.

C. Tile Carpeting:
1. Mannington Commercial: www.manningtoncommercial.com#sle.
2. Milliken & Company: www.milliken.com/#sle.
3. Mohawk Group: www.mohawkgroup.com/#sle.

D. Substitutions: Not permitted.

2.2 MATERIALS

A. Tile Carpeting, Type F-1: _____, manufactured in one color dye lot.
1. Product: _____ manufactured by _____.
2. Tile Size: ____by____ inch, nominal.
3. Thickness: ____ inch.
4. Color: TBD.
5. Pattern: TBD.
6. Critical Radiant Flux: Minimum of 0.22 watts/sq cm, when tested in accordance with ASTM E648 or NFPA 253.
7. Surface Flammability Ignition: Pass ASTM D2859 (the "pill test").
8. VOC Content: Provide CRI (GLP) certified product; in lieu of labeling, independent test report showing compliance is acceptable.

2.3 ACCESSORIES

A. Subfloor Filler: White premix latex; type recommended by flooring material manufacturer.

B. Adhesives:
1. Compatible with materials being adhered; maximum VOC content of 50 g/L; CRI (GLP) certified; in lieu of labeled product, independent test report showing compliance is acceptable.

C. Carpet Tile Adhesive: Recommended by carpet tile manufacturer; releasable type.

PART 3 EXECUTION

3.1 EXAMINATION

A. Verify that subfloor surfaces are smooth and flat within tolerances specified for that type of work and are ready to receive carpet tile.

B. Verify that wall surfaces are smooth and flat within the tolerances specified for that type of work, are dust-free, and are ready to receive carpet tile.

C. Verify that subfloor surfaces are dust-free and free of substances that could impair bonding of adhesive materials to subfloor surfaces.

D. Cementitious Subfloor Surfaces: Verify that substrates are ready for flooring installation by testing for moisture and alkalinity (pH).
   1. Test in accordance with Section 090561.
   2. Obtain instructions if test results are not within limits recommended by flooring material manufacturer and adhesive materials manufacturer.
   3. Follow moisture and alkalinity remediation procedures in Section 090561.

E. Verify that required floor-mounted utilities are in correct location.

3.2 PREPARATION

A. Prepare floor substrates for installation of flooring in accordance with Section 090561.

3.3 INSTALLATION

A. Starting installation constitutes acceptance of subfloor conditions.

B. Install carpet tile in accordance with manufacturer's instructions.

C. Blend carpet from different cartons to ensure minimal variation in color match.

D. Cut carpet tile clean. Fit carpet tight to intersection with vertical surfaces without gaps.

E. Locate change of color or pattern between rooms under door centerline.

F. Fully adhere carpet tile to substrate.

G. Trim carpet tile neatly at walls and around interruptions.

H. Complete installation of edge strips, concealing exposed edges.

3.4 CLEANING

A. Remove excess adhesive without damage, from floor, base, and wall surfaces.

B. Clean and vacuum carpet surfaces.

END OF SECTION

SECTION 097213 - DIGITAL PRINTED VINYL WALLCOVERING

PART 1 - GENERAL

1.1 SUMMARY

A. Provide digitally printed wallcovering vinyl wallcovering, complete.

1.2 RELATED SECTIONS

A. Section 092116 - Gypsum Board Assemblies: Wall Substrates. Level 5 Finish requirements.

B. Section 099000 - Painting and Coating: Preparation and priming of substrate surfaces.

1.3 REFERENCE STANDARDS

A. ASTM D751 - Standard Test Methods for Coated Fabrics; 2019.

B. ASTM D1308 - Standard Test Method for Effect of Household Chemicals on Clear and Pigmented Coating Systems; 2020.

C. ASTM E84 - Standard Test Method for Surface Burning Characteristics of Building Materials; 2021a.

D. ASTM G21 - Standard Practice for Determining Resistance of Synthetic Polymeric Materials to Fungi; 2015, with Editorial Revision (2021).

E. ASTM F793/F793M - Standard Classification of Wall Coverings by Use Characteristics; 2020.

F. NFPA 101 - Life Safety Code; Most Recent Edition Adopted by Authority Having Jurisdiction, Including All Applicable Amendments and Supplements.

G. NFPA 286 - Standard Methods of Fire Tests for Evaluating Contribution of Wall and Ceiling Interior Finish to Room Fire Growth; 2019.

H. UL 723 - Standard for Test for Surface Burning Characteristics of Building Materials; Current Edition, Including All Revisions.

I. Wallcovering Association (WA):
   1. WA-101 - Quality Standard for Polymer Coated Fabric Wallcovering; 2017.

J. Federal Specifications (FedSpec):
   1. CCC-W-408 - Wallcovering, Vinyl Coated, Revision D, January 14, 1994.

1.4 SUBMITTALS

A. See Section 013300 - Submittal Requirements, for submittal procedures.

B. Product Data:
   1. Product data for vinyl film, overlay film and inks.
   2. Installation and maintenance instructions, including removal of graffiti.
   3. Submit MSDS sheets for adhesives, sealants, adhesives, primers, paints and cleaning agents used on the application of the films.

C. Submit one Color Proof for approval prior to manufacture of a full size miniature mural.

D. Submit one full size miniature strike-off for approval prior to the manufacture of full size mural.

1. Submit manufacturers' product data and installation instructions for each digitally printed wallcovering mural, adhesive and accessory required.
   a. Include data on physical properties, fire hazard classification and fire detection characteristics of wallcovering.
   b. Include manufacturer's recommendations for maximum permissible moisture content of substrates.
2. Submit full-size samples, 54 inches wide by 36 inches long, cut from current production of each ground wallcovering selected to demonstrate quality, weight, color and embossing.

E. Submit manufacturer's written product certification that all furnished wallcovering ground meets or exceeds the specification requirements. Include certified copies of tests specified.

F. Submit wallcovering ground manufacturer's written instructions for recommended maintenance of each type of wallcovering required.

1.5 QUALITY ASSURANCE

A. Manufacturer: Provide each type of digitally printed vinyl wallcovering mural required produced by one manufacturer whose published product literature clearly indicates compliance of wallcovering ground with specified requirements.

B. Applicator: Installation by skilled commercial wallcovering applicators with no less than three years of documented experience installing wallcovering murals of the types and extent specified for the project.

C. Material Standards: Provide materials that meet or exceed Federal Specification CCC-W-408A and WA- 101 Quality Standard for Polymer Coated Fabric Wallcovering for Type I and Type II wallcovering.

D. Physical Properties: Provide wallcovering with the following physical properties when tested in accordance with ASTM D751.
   1. Total weight: 21 oz./lin. yd
   2. Tensile Strength: 50 X 55 Minimum (W x F)
   3. Tear Strength: 25 X 25 Minimum (W x F)
   4. Fire Hazard Classification: Provide materials that comply with Class A fire rating when tested in accordance with ASTM E84.
   5. Underwriters Laboratories approval: Provide materials that have been tested and approved by Underwriters Laboratories.
   6. Smoke Toxicity: Provide materials that have been tested for smoke toxicity and approved for use by New York City Materials and Equipment Acceptance Division (MEA).
   7. Fire Detection Characteristics: Provide materials that have been laboratory tested for the Early Warning Effect® in accordance with ASTM E603. Submit test results certifying that when one square foot section of the material is heated to 300 degrees F, the wallcovering emits an odorless, colorless non-toxic vapor that will activate an ionization smoke detector.
   8. Low Emissions: Provide materials that meet the requirements of California Integrated Waste Management Board’s Special Environmental Requirements Specification CA 01350 for low emitting materials.

1.6 PRODUCT DELIVERY, STORAGE AND HANDLING

A. Deliver digitally printed vinyl wallcovering mural to the project site in unbroken and undamaged wrappings and clearly labeled with the manufacturer's identification label, quality or grade, UL label and sidemark.

B. Store materials in a clean, dry storage area with temperature maintained above 55 degrees with normal humidity.

C. Store material in a flat position to prevent damage to roll-ends. Do not cross stack material. Support material off the floor in a manner to prevent sagging and warping.

1.7 PROJECT CONDITIONS

A. Do not apply digitally printed wallcovering mural when surface and ambient temperatures are outside the temperature ranges required by the wallcovering manufacturer.

B. Provide continuous ventilation and heating facilities to maintain substrate surface and ambient temperatures above 60 degrees F unless required otherwise by manufacturer's instructions.

C. Apply adhesive only when substrate surface temperature or ambient temperature is above 60 degrees F, or relative humidity is below 40 percent.
   1. Maintain constant recommended temperature and humidity for at least 72 hours prior to, throughout the installation period and for 72 hours after wallcovering installation completion.
   2. Provide not less than an 80 foot candles per square foot lighting level minimum measured mid height at substrate surfaces.

1.8 WARRANTY

A. See Section 017836 - Warranties and Bonds for additional warranty requirements.

B. Film manufacturer shall provide a five year warranty against manufacturing defects, premature failure, excessive dimensional change and loss of adhesion for interior applications and a three year warranty for exterior applications.

C. Graphic Fabricator and Installer shall provide a five year fabrication and installation warranty against product failure, adhesion and fading for interior applications and a three year warranty for exterior applications.

D. Submit manufacturer’s 5 year written warranty against manufacturing defects.

PART 2 - PRODUCTS

2.1 MANUFACTURERS

A. Basis of Design: Contract Documents are based on products specified below to establish a standard of quality. Other acceptable manufacturers with products having equivalent characteristics may be considered, provided deviations are minor and design concept expressed in Contract Documents is not changed, as determined by the Architect.
   1. Digitally Printed Wallcovering Mural: Koroseal Digitally Printed Wallcovering Murals manufactured by Koroseal Interior Products, LLC. Contact sales representative .

B. Acceptable Manufacturers: Subject to compliance with requirements of Contract Documents, provide product by one of manufacturers listed alphabetically below. If not listed, submit as substitution according to Conditions of the Contract and Division 1 Sections.
   1. 3M Commercial Solutions 3M Center, Building 220-12E-04 St. Paul, MN 55144 USA.

C. Substitutions: Refer to Section 012500 - Substitution Procedures.

2.2 MATERIALS

A. Wallcovering: Koroseal Digital Surfaces Wallcovering , Pattern: Type II conforming to Federal Specification CCC-W-408D and WA-101 using test methods given in Federal Specification CCC-T-191 b excepted as otherwise specified.
   1. Total Weight: 21 ounces per linear yard.
   2. Backing Weight: 3.1 ounces per linear yard.
   3. Vinyl Weight: 17.9 ounces per linear yard
   4. Thickness: 0.018 to 0.026 inches
   5. Fabric backing and content: Poly-Cotton Woven
   6. Digital Image: Owner/Architect to provide PDF file of image to be digitally printed with UV inks on Koroseal Digital Surfaces Type II Wallcovering.

2.3 ACCESSORIES

A. Adhesive: Koroseal A-848-B Heavy-Duty Premixed vinyl adhesive.

B. Substrate Primer/Sealer: White pigmented alkyd or acrylic/latex base primer specifically formulated for use with vinyl wallcoverings.

C. Metal Moldings: Extruded aluminum, alloy 6063-T5, long lengths, with fine satin mechanical finish and class 2 clear architectural anodic coating conforming to AA M21A31 designed for use with vinyl wallcoverings.

PART 3 - EXECUTION

3.1 EXAMINATION

A. Examine substrates and installation conditions.

B. Test substrates with a suitable moisture meter and verify that moisture content does not exceed 4 percent

C. Verify substrate surfaces are clean, dry, smooth, structurally sound and free from surface defects and imperfections that would show through the finished surface.

D. Evaluate all painted surfaces for the possibility of pigment bleed-through.

E. Notify the contractor and architect in writing of any conditions detrimental to the proper and timely completion of the installation. Beginning of installation means acceptance of surface conditions.

3.2 WALL PREPARATION

A. Comply with Manufacturer’s requirements for surface preparation.

B. Repair wall damages, such as holes, loose joints, chipped or peeling paint, remove nails and staples, etc. and return wall to acceptable surface condition to receive graphic.

C. Clean substrate of substances that can impair the product bond, such as oil, grease, dirt, dust, etc., utilizing OEHS approved cleaning products.

D. Prime and paint wall per Section 099000 - Painting and Coating. Paint the wall with a semi gloss top coat. Do not use matte paint or paint with silicone, graffiti resistant or texturizing additives. Allow the final coat of paint to dry for at least five days prior to installing the graphic.

E. Perform adhesion test at each wall location to which a graphic will be applied.

F. Temporarily remove wall applied items for the installation of wall graphic. Reinstall removed items after wall graphic has been applied.

3.3 INSTALLATION

A. Allow digitally printed vinyl wallcovering mural to acclimatize to the area of installation a minimum of 24 hours before installation.

B. Before cutting, examine image and color and determine that they are the correct image and color as specified for the correct location.

C. Read and follow the instructions in the manufacturer's installation sheet contained in each roll of the digitally printed vinyl wallcovering mural.

D. Use adhesive recommended by the wallcovering manufacturer.

E. Install each panel in sequence as indicated on the drawings.

F. If there are variations in color or image that are considered to be excessive, notify the manufacturer's representative for an inspection before any further wallcovering is installed.

G. Smooth wallcovering to the hanging surface using a stiff bristled sweep brush to eliminate air bubbles, wrinkles, gaps and overlaps.

H. Remove excess adhesive along finished seams immediately after each wallcovering strip applied. Use clean warm water, a natural sponge and clean towels. Change water often to maintain water cleanliness.

3.4 PROTECTION

A. Protect the Work of this section until Substantial Completion.

3.5 CLEAN-UP COMPLETION

A. Upon completion of the work, remove surplus materials, rubbish and debris resulting from the wallcovering installation. Leave areas in neat clean and orderly condition.

END OF SECTION

SECTION 099000 - PAINTING AND COATING

PART 1 GENERAL

1.1 SECTION INCLUDES

A. Surface preparation.

B. Interior painting and coating systems.

C. Exterior painting and coating systems.

D. Scope:
   1. Finish surfaces exposed to view, unless fully factory-finished and unless otherwise indicated, including the following:
      a. Exterior:
         1) Concrete: Cementitious siding, Flexboard, Transite, non-roof shingles, common brick, stucco, tilt-up concrete, precast, and cast-in-place concrete.
         2) Metal: Aluminum, galvanized.
      b. Interior:
         1) Drywall: Walls, ceilings, gypsum board, and similar items.

1.2 RELATED REQUIREMENTS

1.3 REFERENCE STANDARDS

A. 40 CFR 59, Subpart D - National Volatile Organic Compound Emission Standards for Architectural Coatings; U.S. Environmental Protection Agency; current edition.

B. CARB (SCM) - Suggested Control Measure for Architectural Coatings; California Air Resources Board; 2020.

C. SCAQMD 1113 - Architectural Coatings; 1977 (Amended 2016).

1.4 SUBMITTALS

A. See Section 013000 - Administrative Requirements for submittal procedures.

B. Product Data: Provide complete list of products to be used, with the following information for each:
   1. Product characteristics.
   2. Surface preparation instructions and recommendations.
   3. Primer requirements and finish specification.
   4. Storage and handling requirements and recommendations.
   5. Application methods.
   6. Clean-up information.

C. Samples: Submit four paper draw down samples, 8-1/2 by 11 inches in size, illustrating range of colors available for each finishing product specified.

D. Certification: By manufacturer that paints and finishes comply with VOC limits specified.

E. Applicator's qualification statement.

F. Maintenance Data: Submit coating maintenance manual including finish schedule showing where each product/color/finish was used, product technical data sheets, safety data sheets (SDS), care and cleaning instructions, touch-up procedures, repair of painted and finished surfaces, and color samples of each color and finish used.

G. Maintenance Materials: Furnish the following for Owner's use in maintenance of project.
   1. See Section 016000 - Product Requirements for additional provisions.
   2. Extra Paint and Finish Materials: 1 gallon of each color; from the same product run, store where directed.
   3. Label each container with color in addition to manufacturer's label.

1.5 QUALITY ASSURANCE

A. Applicator Qualifications: Company specializing in performing the type of work specified with minimum 3 years documented experience and approved by manufacturer.

1.6 DELIVERY, STORAGE, AND HANDLING

A. Deliver products to site in sealed and labeled containers; inspect to verify acceptability.

B. Container Label: Include manufacturer's name, type of paint, product name, product code, color designation, VOC content, batch date, environmental handling, surface preparation, application, and use instructions.

C. Paint Materials: Store at a minimum of 45 degrees F and a maximum of 90 degrees F, in ventilated area, and as required by manufacturer's instructions.

D. Handling: Maintain a clean, dry storage area to prevent contamination or damage to materials.

1.7 FIELD CONDITIONS

A. Do not apply materials when environmental conditions are outside the ranges required by manufacturer.

B. Follow manufacturer's recommended procedures for producing the best results, including testing substrates, moisture in substrates, and humidity and temperature limitations.

PART 2 PRODUCTS

2.1 MANUFACTURERS

A. Basis of Design Products: Subject to compliance with requirements, provide Sherwin-Williams Company (The) products indicated; www.sherwin-williams.com/#sle.

B. Comparable Products: Products of approved manufacturers will be considered in accordance with 016000 - Product Requirements, and the following:
   1. Manufacturer approves products in writing for application specified.
   2. Products that meet or exceed performance and physical characteristics of basis of design products.
   3. Other Acceptable Manufacturers:

2.2 PAINTINGS AND COATINGS

A. General:

1. Provide factory-mixed coatings unless otherwise indicated.
2. When required, mix coatings to correct consistency in accordance with manufacturer's instructions before application.
3. Do not reduce, thin, or dilute coatings or add materials to coatings unless specifically indicated in manufacturer's instructions.

B. Volatile Organic Compound (VOC) Content:
   1. Provide paints and finishes that comply with the most stringent requirements specified in the following:
      a. 40 CFR 59, Subpart D--National Volatile Organic Compound Emission Standards for Architectural Coatings.
      b. SCAQMD 1113 Rule.
      c. CARB (SCM).
      d. Ozone Transport Commission (OTC) Phase II Model Rule, Architectural and Industrial Maintenance Coatings; www.otcair.org.
      e. Architectural coatings VOC limits of State in which the project is located.
   2. Determination of VOC Content: Testing and calculation in accordance with 40 CFR 59, Subpart D (EPA Method 24), exclusive of colorants added to a tint base and water added at project site, or other method acceptable to authorities having jurisdiction.

C. Accessory Materials: Provide primers, sealers, cleaning agents, cleaning cloths, sanding materials, and clean-up materials as required for final completion of painted surfaces.

2.3 PAINT SYSTEMS - EXTERIOR

A. Concrete: Cementitious siding, Flexboard, Transite, non-roof shingles, common brick, stucco, tilt-up, precast, and poured-in-place cement.

2.4 PAINT SYSTEMS - INTERIOR

A. Drywall: Walls, ceilings, gypsum board, and similar items.
   1. Latex Systems:
      a. Semi-Gloss Finish High Performance (HP):
         1) 1st Coat: Sherwin-Williams ProMar 200 Zero VOC Interior Latex Primer, B28W2600: www.sherwin-williams.com/#sle.
            a) 4 mils wet, 1.5 mils dry per coat.
         2) 2nd and 3rd Coat: Sherwin-Williams ProMar 200 HP Zero VOC Latex Semi-Gloss, B31-1950 Series: www.sherwin-williams.com/#sle.
            a) 4 mils wet, 1.6 mils dry per coat.
      b. Semi-Gloss Finish Scuff Resistant Waterbase Enamel:
         1) 1st Coat: Sherwin-Williams ProMar 200 Zero VOC Interior Latex Primer, B28W2600: www.sherwin-williams.com/#sle.
            a) 4 mils wet, 1.5 mils dry per coat.
         2) 2nd and 3rd Coat: Sherwin-Williams Scuff Tuff Interior Waterbased Enamel, Semi-Gloss, S26-50 Series: www.sherwin-williams.com/#sle.
            a) 4 mils wet, 1.2 mils dry per coat.
      c. Eg-Shel Finish Scuff Resistant Waterbase Enamel:
         1) 1st Coat: Sherwin-Williams ProMar 200 Zero VOC Interior Latex Primer, B28W2600: www.sherwin-williams.com/#sle.

2) 2nd and 3rd Coat: Sherwin-Williams Scuff Tuff Interior Waterbased Enamel, Matte, S24-50 Series: www.sherwin-williams.com/#sle.

END OF SECTION

SECTION 099600 - ANTI-GRAFFITI COATINGS

PART 1 GENERAL

1.1 SECTION INCLUDES

A. Anti-graffiti coating to exterior exposed masonry surfaces not scheduled to receive other surface coatings or treatments.

1.2 RELATED SECTIONS

A. Section 04 20 00 - Unit Masonry.

1.3 SUBMITTALS

A. See Section 013300 - Submittal Requirements, for submittal procedures.

B. Product Data: Provide manufacturer’s data sheets on all products. Include:
   1. Product description,
   2. Tests performed,
   3. Limitations to coating,
   4. Cautionary procedures required during application
   5. Chemical properties.

C. Manufacturer's Instructions: Include manufacturer's storage, handling, and application instruction for the type of system and applicable details as well as all special precautions required.

D. Mock-Up: Apply graffiti resistant coating to field mock-up sample representing exterior wall surface to be coated. Apply coating system over a minimum 3 ft x 3 ft test area of each material to receive coating and test removal of applied spray paint in presence of Owner for approval using removal methods recommended by the manufacturer. Coordinate mock-up with 01 40 00 Quality Requirements.

1.4 QUALITY ASSURANCE

A. Manufacturer: Company specializing in manufacturing the Products specified in this section with a minimum of five (5) years experience.

B. Installer Qualifications:
   1. Successful experience in application of similar finish systems.
   2. Employ persons trained for application of finish systems.

C. Mock-Up: Provide a mock-up for evaluation of surface preparation techniques and application workmanship.
   1. Area shall be the Unit Masonry mock-up panel specified in Section 04 20 00 - Unit Masonry unless another location is designated by Architect.
   2. Do not proceed with remaining work until workmanship, color, and sheen are approved by Architect.
   3. Refinish mock-up area as required to produce acceptable work.

D. Single Source Responsibility: Materials shall be products of a single manufacturer.

E. Pre-installation Meeting:

1. Convene a meeting before the start of the application of. Require attendance of parties directly affecting work of this section, including Contractor, Architect, and applicator.
2. Review surface preparation, application, protection, and coordination with other work.

1.5 MOCK-UPS:

A. Area shall be the Unit Masonry mock-up panel specified in Section 04 20 00 - Unit Masonry unless another location is designated by Architect.

B. Do not proceed with remaining work until workmanship, color, and sheen are approved by Architect.

C. Verify with stone panel/terra cotta panel manufacturer to to verify that the applied product doesn't void any warranty.

D. Refinish mock-up area as required to produce acceptable work.

1.6 DELIVERY, STORAGE, AND HANDLING

A. Deliver to job site in manufacturers container, with seals unbroken. Containers shall be properly labeled including product name and ID number.

B. Keep material protected from the elements and in original unopened containers to prevent contamination by foreign materials.

C. Protection: Install temporary coverings and protection, and do not allow any coating to contact plastic, planting soil, plants, asphaltic paving, roofing membranes, or other materials that are likely to be damaged by coating.

D. Weather Conditions: Do not install coating during windy, wet, or excessively hot or dry weather conditions.

E. Store products in manufacturer's unopened packaging until ready for installation.

F. Handling: Protect materials during handling and application to prevent damage or contamination.

1.7 PROJECT CONDITIONS

A. Maintain environmental conditions (temperature, humidity, and ventilation) within limits recommended by manufacturer for optimum results.

B. Do not install products under environmental conditions outside manufacturer's recommended limits.

C. Sealer Coordination:
   1. Verify compatibility with curing compounds, patching materials, repair mortar, paints, sealants, to be used on masonry surfaces to ensure compatibility with the anti-graffiti coating.

D. Exterior Surfaces: Do not apply materials in wet weather.

1.8 EXTRA MATERIALS

A. Furnish extra graffiti removal materials in quantities described below. Package coating materials in unopened, factory-sealed containers for storage and identify with labels describing contents.
   1. Quantity: (1) 5 gallon pail.

1.9 WARRANTY

A. See Section 017836 - Warranties and Bonds, for additional warranty requirements.

B. Manufacturer shall provide a 10 year material warranty as long as the substrate, application, and removal methods meet their guidelines. For the duration of the warranty, no additional graffiti coatings will need to be applied, and after each graffiti removal the warranty protects against yellowing, shadowing, ghosting, or chemical staining.

PART 2 PRODUCTS

2.1 ANTI-GRAFFITI COATING

A. Anti-Graffiti coating shall be a clear, non-sacrificial graffiti resistant coating which provides protection for exterior vertical surfaces from permanent graffiti staining and damage caused by spray paint and marking pens. Coating shall be suitable for application to painted and unpainted surfaces including masonry, concrete, metals, and stucco. Product shall be of type such that recoating with the underlying paint is possible without removal of the graffiti resistant coating. Product shall be a coating that dries clear, non-yellowing, with a low luster.
   1. Manufacturers:
      a. Prosoco: Sure Klean ® Weather Seal Blok-Guard ® & Graffiti Control 15; www.prosoco.com.

B. Acceptable Manufacturers: Subject to compliance with requirements of Contract Documents, provide product by one of manufacturers listed alphabetically below. If not listed, submit as substitution according to Conditions of the Contract and Division 01 Sections.PRO Industrial Anti-Graffiti Coating: www.sherwin-williams.com.
   1. Permashield Premium 5600 over Aquaseal ME 12 by Monopole Inc.
   2. ND Graffiti Shield System by New Dimensions Solutions.
   3. VandlGuard System by Rainguard Pro.
   4. Or Approved Equal

2.2 GRAFFITI REMOVER:

A. Manufacturer's standard graffiti remover or other product as recommended by the manufacturer.

B. Non-caustic, biodegradable and recyclable, allowing graffiti removal without the use of blasting equipment, hot water, or high-pressure wash equipment.

C. 100% biodegradable, suitable for vertical, porous and nonporous surfaces.

D. Substitutions: Refer to Section 012500 - Substitution Procedures.

2.3 MATERIAL

A. Solvent based silicone elastomer masonry sealer formulated to weatherproof exterior masonry.

B. Penetrates and fills pores to prevent water penetration through exterior walls exposed to normal weathering.

C. Shall have UV stability and provide long-lasting protection against water penetration and many types of graffiti.

D. Clear, colorless liquid which produces a water repellent effect without altering color or texture of substrate.

PART 3 EXECUTION

3.1 EXAMINATION

A. Verify all surfaces are ready to receive coating in accordance with manufacturer's printed requirements. Beginning of installation indicates acceptance of substrate.

3.2 PREPARATION

A. Surface shall be free of dirt, dust, contaminants such as curing compounds, hardeners, bond breakers, and form release. Allow painted surfaces to cure properly. Do not water blast painted surfaces. Assure surfaces are clean and dry.

B. Mask or otherwise protect adjacent surfaces not scheduled to receive coating. If applied on unscheduled surfaces such as glass, remove immediately, by approved method.

C. Protect landscaping, property, and vehicles from over spray and drift.

3.3 APPLICATION

A. Apply coating in accordance with manufacturer's published instructions.

B. Application Rate: Apply each coat at the manufacturers published application rate.

3.4 SURFACES TO BE COATED

A. Apply graffiti resistant coating to all exterior exposed building surfaces visible from the ground level, including concrete, masonry, sheet metal items, and stucco. Apply coating to painted and unpainted surfaces. Exclude horizontal surfaces subject to wheel or foot traffic.

B. Apply to exterior non-building vertical surfaces including solid or semi-solid fencing, segmental block or concrete panel retaining walls, and masonry screening as applicable.

C. On building surfaces, apply coating system full height building, (UNO) including exterior overhead or coiling door surfaces. Apply to top of building if no definitive continuous horizontal demarcation lines exist. Exclude wall and door surfaces behind fenced enclosures.

3.5 MAINTENANCE

A. Deliver cleaning products to the Owner for storage and subsequent use for graffiti removal.

B. Apply cleaning instructions label to interior wall location as directed by the Construction Manager.

3.6 FIELD QUALITY CONTROL

A. Owner reserves the right to invoke the following procedure at any time and as often as Owner deems necessary during the period when coatings are being applied:
   1. Contractor will engage the services of a qualified testing agency to sample coating material being used. Samples of material delivered to Project site will be taken, identified, sealed, and certified in presence of Contractor.

2. Testing agency will perform appropriate tests for the following characteristics as required by Owner:
   a. Quanitive materials analysis.
   b. Absorption
   c. Accelerated weathering.
   d. Accelerated yellowness.
   e. Alkali and mildew resistance.
   f. Abrasion resistance.
   g. Washability.
3. Owner may direct Contractor to stop applying coatings if test results show materials being used do not comply with specified requirements. Contractor shall remove noncomplying coating materials from Project site, pay for testing, and recoat surfaces coated with rejected materials. If necessary, Contractor may be required to remove rejected materials from previously coated surfaces if, on recoating with specified materials, the two coatings are not compatible.

B. Verify application rate by periodic on-site inspection and calculation of area covered compared to consumption of coating material used. Document inspections showing total area covered and number and volume of coating containers used.

3.7 CLEANUP AND PROTECTION:

A. During process of work, remove discarded coating materials, rubbish, cans, and rags at end of each workday.

B. Protect work of other trades, whether to be coated or not, against damage by coating and finish work. Correct any damage by cleaning, repairing or replacing, and recoating, as acceptable to Architect.
   1. Provide "Wet Paint" signs to protect newly coated finishes. After completing coating operations, remove temporary protective wrappings provided by others to protect their work.
   2. At completion of construction activities of other trades, touch up and restore damaged or defaced coated surfaces. Comply with procedures specified in PDCA P1.

END OF SECTION

SECTION 101400 - SIGNAGE

PART 2 PRODUCTS

1.1 SIGNAGE APPLICATIONS

A. Accessibility Compliance: Signs are required to comply with ADA Standards and ICC A117.1 _____, unless otherwise indicated; in the event of conflicting requirements, comply with the most comprehensive and specific requirements.

1.2 SIGN TYPES

A. Color and Font: Unless otherwise indicated:
   1. Character Font: Helvetica, Arial, or other sans serif font.
   2. Character Case: Upper case only.
   3. Background Color: Clear.
   4. Character Color: Contrasting color.

END OF SECTION

SECTION 102113.17 - PHENOLIC TOILET COMPARTMENTS

PART 1 GENERAL

1.1 SECTION INCLUDES

A. Phenolic toilet compartments.

B. Urinal screens.

1.2 RELATED REQUIREMENTS

A. Section 055000 - Metal Fabrications: Concealed steel support members.

1.3 REFERENCE STANDARDS

A. ASTM A666 - Standard Specification for Annealed or Cold-Worked Austenitic Stainless Steel Sheet, Strip, Plate, and Flat Bar; 2015.

B. NFPA 286 - Standard Methods of Fire Tests for Evaluating Contribution of Wall and Ceiling Interior Finish to Room Fire Growth; 2019.

1.4 ADMINISTRATIVE REQUIREMENTS

A. Coordination: Coordinate the work with placement of support framing and anchors in walls and ceilings.

1.5 SUBMITTALS

A. See Section 013300 - Submittal Requirements, for submittal procedures.

B. Product Data: Provide data on panel construction, hardware, and accessories.

C. Shop Drawings: Indicate partition plan, elevation views, dimensions, details of wall supports, door swings.

D. Samples: Submit two samples of partition panels, ____by____ inch in size illustrating panel finish, color, and sheen.

PART 2 PRODUCTS

2.1 MANUFACTURERS

A. Phenolic Toilet Compartments:

2.2 PHENOLIC TOILET COMPARTMENTS

A. Toilet Compartments: Factory fabricated doors, pilasters, and divider panels made of solid phenolic core panels with integral melamine finish, floor-mounted unbraced.

B. Doors:
   1. Thickness: 3/4 inch.
   2. Width: 24 inch.
   3. Width for Handicapped Use: 36 inch, out-swinging.
   4. Height: 58 inch.

C. Panels:
   1. Thickness: 1/2 inch.
   2. Height: 58 inch.
   3. Depth: As indicated on drawings.

D. Pilasters:
   1. Thickness: 3/4 inch.
   2. Width: As required to fit space; minimum 3 inch.

E. Screens: Without doors; to match compartments; mounted to wall with two panel brackets with vertical support/bracing same as compartments.

2.3 ACCESSORIES

A. Pilaster Shoes: Formed ASTM A666, Type 304 stainless steel with No. 4 finish, 3 inch high, concealing floor fastenings.
   1. Provide adjustment for floor variations with screw jack through steel saddles integral with pilaster.

B. Head Rails: Hollow anodized aluminum, 1 inch by 1-1/2 inch size, with anti-grip profile and cast socket wall brackets.

C. Wall and Pilaster Brackets: Polished stainless steel; manufacturer's standard type for conditions indicated on drawings.

D. Attachments, Screws, and Bolts: Stainless steel, tamper proof type.

E. Hardware: Polished stainless steel:
   1. Pivot hinges, gravity type, adjustable for door close positioning; two per door.
   2. Door Latch: Slide type with exterior emergency access feature.
   3. Door strike and keeper with rubber bumper; mounted on pilaster in alignment with door latch.
   4. Coat hook with rubber bumper; one per compartment, mounted on door.
   5. Provide door pull for outswinging doors.

PART 3 EXECUTION

3.1 EXAMINATION

A. Verify that field measurements are as indicated.

B. Verify correct spacing of and between plumbing fixtures.

C. Verify correct location of built-in framing, anchorage, and bracing.

3.2 INSTALLATION

A. Install partitions secure, rigid, plumb, and level in accordance with manufacturer's instructions.

B. Maintain 3/8 inch to 1/2 inch space between wall and panels and between wall and end pilasters.

C. Attach panel brackets securely to walls using anchor devices.

D. Attach panels and pilasters to brackets. Locate head rail joints at pilaster center lines.

3.3 TOLERANCES

A. Maximum Variation From True Position: 1/4 inch.

B. Maximum Variation From Plumb: 1/8 inch.

3.4 ADJUSTING

A. Adjust and align hardware to uniform clearance at vertical edge of doors, not exceeding 3/16 inch.

B. Adjust hinges to position doors in partial opening position when unlatched. Return out-swinging doors to closed position.

C. Adjust adjacent components for consistency of line or plane.

END OF SECTION

SECTION 102601 - WALL AND CORNER GUARDS

PART 1 GENERAL

1.1 SECTION INCLUDES

A. Extruded Corner guards.

B. Corner Guards

1.2 RELATED REQUIREMENTS

A. Section 055000 - Metal Fabrications: Anchors for attachment of work of this section, concealed in wall.

1.3 REFERENCE STANDARDS

A. ADA Standards - Americans with Disabilities Act (ADA) Standards for Accessible Design; 2010.

B. ICC A117.1 - Accessible and Usable Buildings and Facilities; 2017.

C. ASTM E84 - Standard Test Method for Surface Burning Characteristics of Building Materials; 2021a.

D. ASTM E119 - Standard Test Methods for Fire Tests of Building Construction and Materials; 2020.

1.4 SUBMITTALS

A. See Section 013300 - Submittal Requirements, for submittal procedures.

B. Product Data: Indicate physical dimensions, features, wall mounting brackets with mounted measurements, anchorage details, and rough-in measurements.

C. Samples: Submit two sections of corner guard, 12 inch long, illustrating component design, configuration, color and finish.

D. Manufacturer's Instructions: Indicate special procedures, perimeter conditions requiring special attention.

1.5 QUALITY ASSURANCE

A. Manufacturer Qualifications: Company specializing in manufacturing products specified in this section, with not less than 10 years of documented experience.

B. Installer Qualifications: Company specializing in performing the work of this section with minimum 5 years of experience.

C. Comply with NFPA 101® for interior finish materials. Smoke developed less than 450 and flame spread of 25 or less in accordance with ASTM E84.

1.6 DELIVERY, STORAGE AND HANDLING

A. Delivery: Deliver materials to site in manufacturer’s original, unopened containers and packaging with labels clearly indicating manufacturer and material.

B. Storage: Store materials indoors in a clean, dry area protected from damage and in accordance with manufacturer’s instructions.

C. Handling: Protect materials during handling and installation to prevent damage.

PART 2 PRODUCTS

2.1 MANUFACTURERS

A. Basis of Design: Contract Documents are based on products specified below to establish a standard of quality. Other acceptable manufacturers with products having equivalent characteristics may be considered, provided deviations are minor and design concept expressed in Contract Documents is not changed, as determined by the Architect.
   1. Construction Specialties, Inc: www.c-sgroup.com.
   2. As specified in this section for other products.

B. Acceptable Manufacturers: Subject to compliance with requirements of Contract Documents, provide product by one of manufacturers listed alphabetically below. If not listed. submit as substitution according to Conditions of the Contract and Division 1 Sections.
   1. Wall and Corner Guards:
      a. Koroseal Wall Protection Systems; A Division of RJF International Corporation: (310)988-8520.
      b. Arden Architectural Specialties, Inc: www.ardenarch.com.

C. Substitutions: Refer to Section 012500 - Substitution Procedures.

2.2 EXTRUDED CORNER GUARDS

A. Corner Guards - Flush Mounted:
   1. Material: Polyethylene terephthalate (PET or PETG); PVC-free with full height extruded aluminum retainer.
   2. Performance: Resist lateral impact force of 100 lbs at any point without damage or permanent set.
   3. Fire Resistance: Where fire rating is specified for the wall in which the guard is mounted, provide assemblies that have been tested in accordance with ASTM E119 for the same rating as the wall.
   4. Surface Burning Characteristics: Provide assemblies with flame spread index of 25 or less and smoke developed index of 450 or less, when tested in accordance with ASTM E84.
   5. Width of Wings: 2 inches.
   6. Corner: Radiused.
   7. Fire Rating: One Hour.
   8. Color: As selected from manufacturer's standard colors.
   9. Length: One piece.

B. Corner Guards - Surface Mounted:
   1. Material: High impact vinyl with full height extruded aluminum retainer.
   2. Material: Polyethylene terephthalate (PET or PETG); PVC-free with full height extruded aluminum retainer.
   3. Material: Type 304 stainless steel, No. 4 finish, _____ gage, _____ inch thick.
   4. Material: Rubber, UV-resistant, black, uniform in color, smooth texture.

5. Material: Clear polycarbonate.
6. Performance: Resist lateral impact force of 100 lbs at any point without damage or permanent set.
7. Surface Burning Characteristics: Provide assemblies with flame spread index of 25 or less and smoke developed index of 450 or less, when tested in accordance with ASTM E84.
8. Width of Wings: 2 inches.
9. Corner: Radiused.
10. Color: As selected from manufacturer's standard colors.
11. Projection From Wall to Outside of Guard: ____ inch.
12. Length: One piece.
13. Preformed end caps.

C. Corner Guards: Surface mounted.
   1. Materials
      a. Engineered PETG: Extruded material should be high impact Acrovyn 4000 with shadowgrain texture. Chemical and stain resistance should be per ASTM D543 standards as established by the manufacturer.
   2. Surface mounted guards consisting of continuous cover.
      a. Model VA-250N with 2-½" (64mm) legs.
      b. Refer to Drawings for locations and odd angle occurences.
      c. Color: Refer to Drawings and Material Schedule.
   3. Accessories:
      a. Adhesive tape: VHB Tape by 3M. www.3M.com/vhb.

2.3 STAINLESS STEEL CORNER GUARDS:

A. Stainless Steel:
   1. Stainless steel corner guards to be CS Acrovyn: Surface mounted guards to be 16 gauge stainless steel.
      a. Type WG-1: Model CO-8: 90° stainless steel corner guard with 3/16" (4.8mm) radius and 3 1/2" (88.9mm) standard legs.
   2. Materials:
      a. Stainless steel: To be type 304 alloy with #4 satin finish.
   3. Mounting: Surface Mounted
      a. Mounted with construction adhesive standard.
      b. Hardware: Provide attachment hardware for complete and secure assembly. Flush mounted screws.
      c. All necessary fasteners to be supplied by the manufacturer.
   4. Height: As indicated on Drawings.
   5. Locations: As indicated on Drawings.

2.4 ACCESSORIES

A. Mounting Brackets and Attachment Hardware: Appropriate to component and substrate.

B. Adhesive: Manufacturer recommended contact

C. Wall backing: Provide horizontal backing . See Section 05 50 00 - Metal Fabrications for supply of anchor devices to be installed as work of this section.

2.5 FABRICATION

A. Fabricate components with tight joints, corners and seams.

B. Pre-drill holes for attachment.

C. Form end trim closure by capping and finishing smooth.

PART 3 EXECUTION

3.1 EXAMINATION

A. Verify that rough openings, concealed blocking, and anchors are correctly sized and located.

B. Verify that field measurements are as indicated on drawings.

3.2 INSTALLATION

A. Install the work of this section in strict accordance with the manufacturer's recommendations, using only approved adhesive or mounting hardware and locating all components firmly into position, level and plumb.

B. Position corner guard 4 inches above finished floor to 72 inches high.

3.3 TOLERANCES

A. Maximum Variation From Required Height: 1/4 inch.

B. Maximum Variation From Level or Plane For Visible Length: 1/4 inch.

3.4 CLEANING

A. General: Immediately upon completion of installation, clean material in accordance with manufacturer's recommended cleaning method.

END OF SECTION

SECTION 102800 - TOILET ROOM ACCESSORIES

PART 1 GENERAL

1.1 SECTION INCLUDES

A. Commercial toilet accessories.

B. Commercial shower and bath accessories.

C. Utility room accessories.

1.2 RELATED REQUIREMENTS

A. Section 079200 - Joint Sealants: Sealant around grab bars and accessories.

1.3 REFERENCE STANDARDS

A. ADA Standards - Americans with Disabilities Act (ADA) Standards for Accessible Design; 2010.

B. ASTM A123/A123M - Standard Specification for Zinc (Hot-Dip Galvanized) Coatings on Iron and Steel Products; 2017.

C. ASTM A269/A269M - Standard Specification for Seamless and Welded Austenitic Stainless Steel Tubing for General Service; 2015a (Reapproved 2019).

D. ASTM A653/A653M - Standard Specification for Steel Sheet, Zinc-Coated (Galvanized) or Zinc-Iron Alloy-Coated (Galvannealed) by the Hot-Dip Process; 2020.

E. ASTM A666 - Standard Specification for Annealed or Cold-Worked Austenitic Stainless Steel Sheet, Strip, Plate, and Flat Bar; 2015.

F. ASTM B456 - Standard Specification for Electrodeposited Coatings of Copper Plus Nickel Plus Chromium and Nickel Plus Chromium; 2017.

G. ASTM C1036 - Standard Specification for Flat Glass; 2021.

H. ASTM C1048 - Standard Specification for Heat-Strengthened and Fully Tempered Flat Glass; 2018.

I. ASTM F2285 - Standard Consumer Safety Performance Specification for Diaper Changing Tables for Commercial Use; 2004, with Editorial Revision (2016).

1.4 ADMINISTRATIVE REQUIREMENTS

A. Coordinate the work with the placement of internal wall reinforcement, concealed ceiling supports, and reinforcement of toilet partitions to receive anchor attachments.

1.5 SUBMITTALS

A. See Section 013300 - Epoxy Flooring and Wall Systems, for submittal procedures.

B. Product Data: Submit data on accessories describing size, finish, details of function, and attachment methods.

C. Samples: Submit two samples of each accessory, illustrating color and finish.

D. Manufacturer's Installation Instructions: Indicate special procedures and conditions requiring special attention.

1.6 DELIVERY, STORAGE, AND HANDLING

A. Deliver, store and handle materials and products in strict compliance with manufacturer's instructions and recommendations. Protect from damage.

1.7 WARRANTY

A. See Section 017836 - Product Warranties and Bonds, for additional warranty requirements.

B. Manufacturer’s Warranty for Washroom Accessories: Manufacturer’s standard 1 year warranty for materials and workmanship.

PART 2 PRODUCTS

2.1 MANUFACTURERS

A. Refer to Drawings - Toilet Accessory Schedule and Interior Elevations.

B. Basis of Design: Contract Documents are based on products specified below to establish a standard of quality. Other acceptable manufacturers with products having equivalent characteristics may be considered, provided deviations are minor and design concept expressed in Contract Documents is not changed, as determined by the Architect.
   1. Basis of Design: Bobrick Washroom Equipment, Inc..

C. Acceptable Manufacturers: Subject to compliance with requirements of Contract Documents, provide product by one of manufacturers listed alphabetically below. If not listed, submit as substitution according to Conditions of the Contract and Division 1 Sections.
   1. American Specialties, Inc: www.americanspecialties.com.
   2. Bradley Corporation: www.bradleycorp.com.

D. Substitutions: See Section 012500 - Substitution Procedures.

E. Provide products of each category type by single manufacturer.

2.2 MATERIALS

A. Accessories - General: Shop assembled, free of dents and scratches and packaged complete with anchors and fittings, steel anchor plates, adapters, and anchor components for installation.
   1. Grind welded joints smooth.
   2. Fabricate units made of metal sheet of seamless sheets with flat surfaces.

B. Keys: Provide 6 keys for each accessory to Owner; master key lockable accessories.

C. Stainless Steel Sheet: ASTM A666, Type 304.

D. Stainless Steel Tubing: ASTM A269/A269M, Grade TP304 or TP316.

E. Galvanized Sheet Steel: Hot-dipped galvanized steel sheet, ASTM A653/A653M, with G90/Z275 coating.

F. Mirror Glass: Tempered safety glass, ASTM C1048; and ASTM C1036 Type I, Class 1, Quality Q2, with silvering as required.

G. Adhesive: Two component epoxy type, waterproof.

H. Fasteners, Screws, and Bolts: Hot dip galvanized; tamper-proof; security type.

I. Expansion Shields: Fiber, lead, or rubber as recommended by accessory manufacturer for component and substrate.

2.3 FINISHES

A. Stainless Steel: Satin finish, unless otherwise noted.

B. Chrome/Nickel Plating: ASTM B456, SC 2, polished finish, unless otherwise noted.

C. Galvanizing for Items Other than Sheet: Comply with ASTM A123/A123M; galvanize ferrous metal and fastening devices.

D. Shop Primed Ferrous Metals: Pretreat and clean, spray apply one coat primer and bake.

E. Back paint components where contact is made with building finishes to prevent electrolysis.

2.4 COMMERCIAL TOILET ACCESSORIES

A. Refer to Drawings - Toilet Accessory Schedule and Interior Elevations.

B. Mirrors: Stainless steel framed, 1/4 inch thick annealed float glass; ASTM C1036.
   1. Refer also to Section 088300 - Mirrors.

2.5 ADA PIPING PROTECTION SYSTEMS

A. Undersink Piping Protective Covers:
   1. General: Comply with requirements of (ADAAG), ANSI/ICC A117.1, and as follows:
      a. Contractor to provide one of the following types.
      b. Lavatory P-traps and angle valve assemblies shall be covered with undersink protective pipe cover assemblies.
         1) Cover assemblies shall include P-trap cover, two angle valve covers, offset grid drain cover, tailpiece cover, and extensions as necessary to cover all undersink piping and valves.
      c. Covers shall be secured with snap-clip flush reusable fasteners, and angle stop shall have locking access cover. Cable ties or baggie tie fasteners are not acceptable.
      d. Covers shall be installable and removable without requiring disassembly of P-trap or angle stop.
      e. Covers shall allow for emergency and maintenance access to the plumbing P-trap clean-out and angle stop valve without removing piping covers.

OR

B. Undersink Piping Protective Covers - Type PPC-1 : Product: Soft Guard Plus.
   1. Provide under sink pipe protection to all drainage piping including hot and cold water valves and supplies under lavatories to meet ADA compliance.
   2. Material: 1/8" Pliable PVC Shell Finish.
   3. 1-1/2" Schedule 40 Plastic with Swivel Nuts.
   4. Furnished custom fit snap-to-lock fasteners may be used for improved tamper resistance.
   5. Burning Characteristics: PVC Base Insulation Material complies with 25 Flame Spread/450 Smoke Index.
   6. Bacteria/Fungus Resistance ASTM G21 — Result: 0 growth.

C. Basis of Design Manufacturer: TrueBro, Inc.; 7 Main Street, Ellington, CT 06029; Tel. 860-875-2868 or 800-340-5969; Fax. 860-872-0300; internet:www.truebro.com.
   1. TrueBro Lav-Guard Undersink Protective Pipe Covers.

D. Substitutions: See Section 01600 - Product Requirements.

2.6 COMMERCIAL SHOWER AND BATH ACCESSORIES

A. Shower Curtain Rod: Stainless steel tube, 1 inch outside diameter, 0.04 inch wall thickness, satin-finished, with 3 inch outside diameter, minimum 0.04 inch thick satin-finished stainless steel flanges, for concealed mounting.
   1. Products:
      a. American Specialties, Inc: www.americanspecialties.com/#sle.

B. Shower Curtain: Refer to Toilet Accessory Schedule and Drawings.
   1. Material: Cotton, machine washable, and mildew-resistant.
   2. Size: _____ inches, hemmed edges.
   3. Grommets: Stainless steel; pierced through top hem on 6 inch centers.
   4. Color: White.
   5. Shower Curtain Hooks: Chrome-plated or stainless steel spring wire designed for snap closure.

C. Folding Shower Seat: Wall-mounted surface; welded tubular seat frame, structural support members, swing-down legs, hinges, and mechanical fasteners of Type 304 stainless steel, L-shaped, right hand seat.
   1. Seat: Phenolic or polymeric composite one-piece seat or seat slats, of ____ color.
   2. Configuration: L-shaped seat, designed for wheelchair access.
   3. Size: ADA Standards compliant.
   4. Dimensions: 33” wide and projects 22 5/16” from wall.

2.7 DIAPER CHANGING STATIONS

A. Diaper Changing Station: Wall-mounted folding diaper changing station for use in commercial toilet facilities, meeting or exceeding ASTM F2285.
   1. Material: Stainless steel.
   2. Mounting: Surface.
   3. Color: Gray.
   4. Minimum Rated Load: 250 pounds.
   5. Products:
      a. Refer to Toilet Accessory Schedule in Drawings.

B. Accessories: Liners For Diaper Changing Station.

2.8 UTILITY ROOM ACCESSORIES

A. Combination Utility Shelf/Mop and Broom Holder: 0.05 inch thick stainless steel, Type 304, with 1/2 inch returned edges, 0.06 inch steel wall brackets.
   1. Drying rod: Stainless steel, 1/4 inch diameter.
   2. Hooks: Two, 0.06 inch stainless steel rag hooks at shelf front.
   3. Mop/broom holders: Three spring-loaded rubber cam holders at shelf front.
   4. Length: Manufacturer's standard length for number of holders/hooks.
   5. Products:

a. Refer to Toilet Accessory Schedule in Drawings.

PART 3 EXECUTION

3.1 EXAMINATION

A. Verify existing conditions before starting work.

B. Verify exact location of accessories for installation.

C. For electrically-operated accessories, verify that electrical power connections are ready and in the correct locations.

D. Verify that field measurements are as indicated on drawings.

E. See Sections 06 1000 for installation of blocking, reinforcing plates, and concealed anchors in walls and ceilings.

3.2 PREPARATION

A. Deliver inserts and rough-in frames to site for timely installation.

B. Provide templates and rough-in measurements as required.

3.3 INSTALLATION

A. Install accessories in accordance with manufacturers' instructions in locations indicated on drawings.

B. Install plumb and level, securely and rigidly anchored to substrate in locations and at heights indicated on Drawings.

C. Mounting Heights and Locations: As required by accessibility regulations and as indicated on drawings

3.4 ADJUSTING AND CLEANING

A. Adjust accessories for unencumbered, smooth operation. Replace damaged or defective items.

B. Remove temporary labels and protective coatings.

C. Clean and polish exposed surfaces according to manufacturer's written recommendations

3.5 PROTECTION

A. Protect installed accessories from damage due to subsequent construction operations.

END OF SECTION

SECTION 104300 - EMERGENCY AID SPECIALTIES

PART 1 GENERAL

1.1 SECTION INCLUDES

A. Automated external defibrillators (AEDs).

B. Automated external defibrillator (AED) cabinets.

C. Accessories.

1.2 RELATED REQUIREMENTS

A. Section 061000 - Rough Carpentry: Wood blocking product and execution requirements.

1.3 DEFINITIONS

1.4 REFERENCE STANDARDS

A. ASTM E814 - Standard Test Method for Fire Tests of Penetration Firestop Systems; 2013a (Reapproved 2017).

1.5 SUBMITTALS

A. See Section 013000 - Administrative Requirements for submittal procedures.

B. Product Data: Provide AED operational features, color and finish, anchorage details, and installation instructions.

C. Shop Drawings: Indicate locations of cabinets and cabinet physical dimensions.

D. Manufacturer's Installation Instructions: Indicate special criteria and wall opening coordination requirements.

E. Manufacturer's Certificate: Certify that products meet or exceed specified requirements.

F. Maintenance Data: Include test schedules and recertification requirements.

PART 2 PRODUCTS

2.1 MANUFACTURERS

A. Automated External Defibrillators (AEDs):
   1. Philips Medical Systems: www.usa.philips.com/#sle.
   2. Stryker Corporation; _____: www.stryker.com/#sle.

B. Emergency Aid Cabinets and Accessories:
   1. Activar Construction Products Group, Inc. - JL Industries; LifeStart 1400 Series AED Cabinet: www.activarcpg.com/#sle.

2.2 AUTOMATED EXTERNAL DEFIBRILLATORS (AEDS)

A. Automated External Defibrillators (AEDs) - General: FDA approval required.

2.3 EMERGENCY AID CABINETS

A. Type: Automated external defibrillator (AED).

B. Fire Rating: Listed and labeled in accordance with ASTM E814 requirements for fire resistance rating of walls where being installed.

C. Fire-Rated Cabinet Construction: One-hour fire rated.

D. Cabinet Configuration: Recessed type.
   1. Size to accommodate AED.
   2. Trimless type.
   3. Provide cabinet enclosure with right angle inside corners and seams, and with formed perimeter trim and door stiles.

E. Door: 0.036 inch metal thickness, reinforced for flatness and rigidity with wire pull handle and nylon catch. Hinge door for 180 degree opening with two butt hinges.

F. Cabinet Mounting Hardware: Appropriate to cabinet, with predrilled holes for placement of anchors.

G. Finish of Cabinet Interior: White powder coat.

2.4 ACCESSORIES

A. Cabinet Door Signage: "AED decal, or vinyl self-adhering, prespaced black lettering and identifying graphic in accordance with authorities having jurisdiction (AHJ).

B. Plastic Wall Signage: Flat style.

PART 3 EXECUTION

3.1 EXAMINATION

A. Verify existing conditions before starting work.

B. Verify rough openings for cabinet are correctly sized and located.

3.2 INSTALLATION

A. Install in accordance with manufacturer's instructions.

B. Install cabinets plumb and level in wall openings, 48 inches from finished floor to inside bottom of cabinet.

C. Secure rigidly in place.

D. Place AEDs in cabinets.

E. Wall Signs:
   1. Location: Where shown.
   2. Apply on walls after field painting is completed and has been accepted.

F. Cabinet Lettering:
   1. Location: Face of door framing.

2. Apply lettering on factory-finished cabinets either at the factory or just prior to Substantial Completion.

3.3 ADJUSTING AND CLEANING

A. Remove temporary protective coverings and strippable films, if any, as cabinets are installed unless otherwise indicated in manufacturer's written installation instructions.

B. Adjust cabinet doors to operate smoothly without binding. Verify that alarms and integral locking devices operate properly.

C. On completion of cabinet installation, clean interior and exterior surfaces as recommended by manufacturer.

D. Touch up marred finishes. Replace cabinets that cannot be restored to factory-finished appearance. Use materials and procedures recommended by cabinet manufacturer.

3.4 CLOSEOUT ACTIVITIES

A. Demonstrate proper operation of AED to Owner's designated representative.

END OF SECTION

SECTION 104400 - FIRE PROTECTION SPECIALTIES

PART 1 GENERAL

1.1 SECTION INCLUDES

A. Fire extinguishers.

B. Fire extinguisher cabinets.

C. Accessories.

1.2 RELATED REQUIREMENTS

A. Section 061000 - Rough Carpentry: Wood blocking product and execution requirements.

1.3 REFERENCE STANDARDS

A. ASTM E814 - Standard Test Method for Fire Tests of Penetration Firestop Systems; 2013a (Reapproved 2017).

B. FM (AG) - FM Approval Guide; current edition.

C. NFPA 10 - Standard for Portable Fire Extinguishers; 2022.

D. UL (DIR) - Online Certifications Directory; Current Edition.

1.4 SUBMITTALS

A. See Section 013300 - Submittal Requirements, for submittal procedures.

B. Product Data: Provide extinguisher operational features, extinguisher ratings and classifications, color and finish, anchorage details, and installation instructions.

C. Shop Drawings: Indicate locations of cabinets, cabinet physical dimensions, rough-in measurements for recessed cabinets, locations of individual fire extinquishers, mounting measurements for wall bracket, installation procedures, and accessories required for complete installation.

D. Samples for Verification: For each type of exposed finish required, prepared on Samples of size indicated below:
   1. Size: 6 by 6 inches (150 by 150 mm) square.

E. Manufacturer's Installation Instructions: Indicate special criteria and wall opening coordination requirements.

F. Manufacturer's Certificate: Certify that products meet or exceed specified requirements.

G. Maintenance Data: Include test, refill or recharge schedules and re-certification requirements.

1.5 COORDINATION

A. Coordinate size of fire protection cabinets to ensure that type and capacity of fire extinguishers indicated are accommodated.

B. Coordinate sizes and locations of fire protection cabinets with wall depths.

1.6 FIELD CONDITIONS

A. Do not install extinguishers when ambient temperature may cause freezing of extinguisher ingredients.

PART 2 PRODUCTS

2.1 MANUFACTURERS

A. Fire Extinguishers:
   1. Activar Construction Products Group, Inc. - JL Industries; Cosmic Extinguisher - Multipurpose Chemical: www.activarcpg.com/#sle.
   2. Potter-Roemer: www.potterroemer.com.
   3. Or Approved Equal.

B. Fire Extinguisher Cabinets and Accessories:
   1. Basis of Design: Activar Construction Products Group, Inc. - JL Industries; Ambassador Series: www.activarcpg.com/#sle.
   2. Larsen's Manufacturing Co: www.larsensmfg.com.
   3. Potter-Roemer: www.potterroemer.com.

C. Substitutions: Refer to Section 012500 - Substitution Procedures.

2.2 FIRE EXTINGUISHERS

A. Fire Extinguishers - General: Comply with product requirements of NFPA 10 and applicable codes, whichever is more stringent.
   1. Provide extinguishers labeled by UL (DIR) or FM (AG) for purpose specified and as indicated.

B. Multipurpose Dry Chemical Type Fire Extinguishers: Carbon steel tank, with pressure gauge.
   1. Construction: Heavy duty steel cylinder with metal valve and siphon tube, O-ring seal, replaceable valve stem seal, visual pressure gage, pull pin and upright squeeze grip.
   2. Class: 5E; 3A-40BC type.
   3. Size: 5 pound.
   4. Monoammonium phosphate-based dry chemical.
   5. Finish: Baked polyester powder coat, red color.
   6. Valves: Manufacturer's standard.
   7. Handles and Levers: Manufacturer's standard.
   8. Instruction Labels: Include pictorial marking system complying with NFPA 10, Appendix B and bar coding for documenting fire extinguisher location, inspections, maintenance, and recharging.
   9. Temperature range: Minus 40 degrees F to 120 degrees F.

2.3 FIRE EXTINGUISHER CABINETS - (JR INDUSTRIES)

A. Type FEC-1: Cabinet Configuration: Recessed, Flat Trim.
   1. Basis of Design: Ambassador Series.
   2. Model #: 1015.
   3. Door Style: Style W: Vertical Duo Panel with SAF-T-LOK™; narrow vertical glazing full height of door; theft-deterrent, pull handle.
   4. Trim Style and Depth:

a. Recessed Cabinet: 3/8 inch (9.53 mm) flat trim.

5. Form cabinet enclosure with right angle inside corners and seams. Form perimeter trim and door stiles.
6. Door and Trim Construction:
   a. Cold-rolled steel with white powder-coated finish standard. Flush cabinet doors with a 5/8" door stop are attached by a continuous hinge and equipped with zinc-plated handle and roller catch. All models have 1-3/4" wide trim on frame and 1-1/4 trim on doors with glazing.
   b. Finish:
      1) Standard Color: White.
7. Door Glazing: Type 17: Clear tempered glass.
8. Tub: The tub is constructed of CRS with white powder-coat finish standard.
9. Cabinet Mounting Hardware: Appropriate to cabinet. Pre-drill for anchors.
10. Weld, fill, and grind components smooth.

B. Type FEC-2: Cabinet Configuration: Semi-recessed type.
   1. Basis of Design: Ambassador Series.
   2. Model #: 1017.
   3. Door Style: Style W: Vertical Duo Panel with SAF-T-LOK™; narrow vertical glazing full height of door; theft-deterrent, pull handle.
   4. Trim Style and Depth: Semi-recessed Cabinet:
      a. Rolled Edge: 3 inch (76.20 mm), as required for specified extinguisher.
   5. Door and Trim Construction:
      a. Cold-rolled steel with white powder-coated finish standard. Flush cabinet doors with a 5/8" door stop are attached by a continuous hinge and equipped with zinc-plated handle and roller catch. All models have 1-3/4" wide trim on frame and 1-1/4 trim on doors with glazing.
      b. Finish:
         1) Standard Color: White.
      c. Finish of Cabinet Interior: White enamel.
   6. Door Glazing: Type 17: Clear tempered glass.
   7. Tub: The tub is constructed of CRS with white powder-coat finish standard.
   8. Cabinet Mounting Hardware: Pre-drill for anchors.
   9. Door Hardware: Manufacturer's standard door-operating hardware of proper type for cabinet type, trim style, and door material and style indicated.
      a. Provide ADA flush door pull and friction latch.
      b. Provide manufacturer's standard hinge permitting door to open 180 degrees.
   10. Weld, fill, and grind components smooth.

C. Type FEC-3: Cabinet Configuration: Surface type.
   1. Basis of Design: Ambassador Series.
   2. Model #: 1013
   3. Door Style: Style W: Vertical Duo Panel with SAF-T-LOK™; narrow vertical glazing full height of door; theft-deterrent, pull handle.
   4. Trim Style and Depth: Surface-Mount Cabinet:
      a. Standard Profile: Square Edge or Rolled Edge (optional).
      b. Trim Dimensions: 1-3/4 inch (44.45 mm) face trim on frame and 1-1/4 inch (31.75 mm) face trim on door.

5. Door and Trim Construction:
   a. Cold-rolled steel with white powder-coated finish standard. Flush cabinet doors with a 5/8" door stop are attached by a continuous hinge and equipped with zinc-plated handle and roller catch.
   b. Finish:
      1) Standard Color: White.
   c. Finish of Cabinet Interior: White enamel.
6. Door Glazing: Type 17: Clear tempered glass.
7. Tub (Surface mount cabinets): The tub is constructed of CRS with white powder-coat finish standard.
8. Cabinet Mounting Hardware: Appropriate to cabinet. Pre-drill for anchors.
9. Door Hardware: Manufacturer's standard door-operating hardware of proper type for cabinet type, trim style, and door material and style indicated.
   a. Provide ADA flush door pull and friction latch.
   b. Provide manufacturer's standard hinge permitting door to open 180 degrees.
10. Weld, fill, and grind components smooth.

D. Fire-Rated Cabinets: Listed and labeled to meet requirements of ASTM E814 for fire-resistance rating of wall where it is installed. Construct fire-rated cabinets with double walls fabricated from 0.0478 inch (1.2-mm) thick, cold-rolled steel sheet lined with minimum (16-mm) thick, fire-barrier material. Provide factory drilled mounting holes.

2.4 ACCESSORIES

A. Break-Glass Strike: Manufacturer's standard metal strike, complete with chain and mounting clip, secured to cabinet.

B. Identification: Lettering complying with authorities having jurisdiction for letter style, size, spacing, and location.
   1. Identify fire extinguisher in fire-protection cabinet with the words "FIRE EXTINGUISHER."
      a. Location: Applied to cabinet door.
      b. Application Process: Pressure-sensitive vinyl letters.
      c. Lettering Color: Red.
      d. Orientation: Vertical.

C. Extinguisher Brackets: Formed steel, chrome-plated.

PART 3 EXECUTION

3.1 EXAMINATION

A. Verify existing conditions before starting work.

B. Verify rough openings for cabinet are correctly sized and located.

3.2 INSTALLATION

A. Install in accordance with manufacturer's instructions.

B. Install cabinets plumb and level, 60 inches from finished floor to the top of the extinguisher, or as indicated on Drawings.

C. Secure rigidly in place.

D. Place extinguishers in cabinets.

E. Wall Signs:
   1. Location: Where shown or directed.
   2. Apply on walls after field painting is completed and has been accepted.

F. Position cabinet signage as indicated.

3.3 MAINTENANCE - SELF-SERVICE FIRE EXTINGUISHERS

A. Monthly Inspections: Inspect self-service fire extinguishers on monthly basis in accordance with manufacturer's instructions, and requirements of the authorities having jurisdiction (AHJ).

B. Annual Inspections: Inspect self-service fire extinguishers on annual basis in accordance with manufacturer92s instructions, and requirements of the authorities having jurisdiction (AHJ).

C. Inspection Certification Tag: Provide new tag indicating acceptable condition of fire extinguisher, date of inspection, and name of self-service inspector for each inspection.

END OF SECTION

SECTION 107500 - FLAGPOLES

PART 1 GENERAL

1.1 SECTION INCLUDES

A. Aluminum Flagpoles.

1.2 RELATED REQUIREMENTS

A. Section 033000 - Cast-in-Place Concrete: Concrete base and foundation construction.

1.3 REFERENCE STANDARDS

A. AASHTO M 36 - Standard Specification for Corrugated Steel Pipe, Metallic-Coated, for Sewers and Drains; 2016 (Reapproved 2020).

B. ASTM A123/A123M - Standard Specification for Zinc (Hot-Dip Galvanized) Coatings on Iron and Steel Products; 2017.

C. ASTM B241/B241M - Standard Specification for Aluminum and Aluminum-Alloy Seamless Pipe and Seamless Extruded Tube; 2016.

D. NAAMM FP 1001 - Guide Specifications for Design Loads of Metal Flagpoles; 2007.

1.4 SUBMITTALS

A. See Section 013300 - Submittal Requirements, for submittal procedures.

B. Product Data: Provide data on pole, accessories, and configurations.

C. Shop Drawings: Indicate detailed dimensions, base details, anchor requirements, and imposed loads.

D. Designer's Qualification Statement.

1.5 QUALITY ASSURANCE

A. Designer Qualifications: Design flagpole foundation under direct supervision of a Professional Structural Engineer experienced in design of this Work and licensed Nevada.

1.6 DELIVERY, STORAGE, AND HANDLING

PART 2 PRODUCTS

2.1 MANUFACTURERS

A. Flagpoles:
   1. Concord American Flagpole; External - Continental: www.concordamericanflagpole.com/#sle.
   2. Pole-Tech Co, Inc; ____: www.poletech.com/#sle.
   3. Substitutions: See Section 016000 - Product Requirements.

2.2 FLAGPOLES

A. Flagpoles: Designed in accordance with NAAMM FP 1001.

1. Material: Aluminum.
2. Design: Cone tapered.
3. Mounting: Ground mounted type.
4. Outside Butt Diameter: ____ inches.
5. Outside Tip Diameter: ____ inches.
6. Nominal Wall Thickness: ____ inches.
7. Nominal Height: ____ ft; measured from nominal ground elevation.
8. Halyard: Internal type, manual winch operation.

B. Performance Requirements:
   1. Wind Pressure Loading on Flagpole with Flag: Resistant without permanent deformation to ____ miles/hr wind speed, in accordance with NAAMM FP 1001; the factor of safety used is 2.5.

2.3 POLE MATERIALS

A. Aluminum: ASTM B241/B241M, 6063 alloy, T6 temper.

2.4 ACCESSORIES

A. Finial Ball: Aluminum, 6 inch diameter.

B. Truck Assembly: Cast aluminum; revolving, stainless steel ball bearings, non-fouling.

C. Flag: _____ design, 5 ft by 8 ft size, nylon fabric, brass grommets, hemmed edges.

D. Halyard: 5/16 inch diameter nylon, braided, white.

E. Connecting Sleeve For Multiple Section Poles: Same material as pole, precision fit for field assembly of pole, concealed fasteners.

F. Primer: Zinc chromate type.

2.5 OPERATORS

A. Hand Crank: Removable _____ type.

2.6 MOUNTING COMPONENTS

A. Foundation Tube Sleeve: AASHTO M 36, corrugated 16 gauge, 0.0598 inch steel, galvanized, depth of ____ inches as indicated.

B. Pole Base Attachment: Tube; steel base with base cover.

C. Lighting Ground Rod: ____ inch long copper rod, 3/4 inch diameter.

D. Lightning Ground Cable: Copper No. 6 AWG, soft drawn.

2.7 FINISHING

A. Metal Surfaces in Contact With Concrete: Asphaltic paint.

B. Concealed Steel Surfaces: Prime painted.

C. Exposed to View Steel Surfaces: Galvanized to ASTM A123/A123M requirements.

D. Aluminum: Mill finish.

PART 3 EXECUTION

3.1 EXAMINATION

A. Verify that concrete foundation is ready to receive work and dimensions are as indicated on shop drawings.

3.2 PREPARATION

A. Coat metal sleeve surfaces below grade and surfaces in contact with dissimilar materials with asphaltic paint.

3.3 INSTALLATION

A. Install flagpole, base assembly, and fittings in accordance with manufacturer's instructions.

B. Electrically ground flagpole installation.

C. Fill foundation tube sleeve with concrete specified in Section 033000.

3.4 TOLERANCES

A. Maximum Variation From Plumb: 1 inch.

3.5 ADJUSTING

A. Adjust operating devices so that halyard and flag function smoothly.

END OF SECTION

SECTION 114000 - FOODSERVICE EQUIPMENT

PART 1 - GENERAL

1.1 SUMMARY

A. Foodservice Equipment, including storage, preparation and serving equipment, as indicated on the Foodservice Equipment drawings and in ARTICLE 3.6 - EQUIPMENT SCHEDULE, herein. The Foodservice Equipment drawings form part of these specifications.

B. Stainless steel fabrications, including countertops, cabinetry and corner guards

C. Plumbing, including faucets, drains and fittings for sinks built into Foodservice Equipment

D. Exhaust Hoods and related Ventilation

E. Walk-In Cooler and Freezer

1.2 RELATED SECTIONS

A. Section 016000 - Product Requirements: Conditions for acceptance of products by manufacturers and for substitutions. Unless specifically noted, no substitutions will be considered.

B. Section 017836 - Warranty and Bonds

C. Section 033000 - Cast-In-Place Concrete: Concrete curbs, pads and depressions

D. Section 055000 - Metal Fabrications: Metal supports and anchors to concrete and masonry

E. Section 079200 - Joint Sealers/Sealants: Joint sealing for weather tightness, waterproofing and acoustical seals

F. Divisions 22 & 23 Section - Basic Mechanical Requirements: General requirements, in addition to those specified, as applicable to plumbing, fire protection and ventilating work associated with foodservice equipment

G. Divisions 22 & 23 Section - Supports, Anchors and Seals: General requirements for supports and anchors for pipe and duct systems for foodservice equipment

H. Division 26 Section - Basic Electrical Requirements: General requirements, in addition to those specified, as applicable to electrical work associated with foodservice equipment

1.3 REFERENCE STANDARDS

A. ASME BPVC-IV - Boiler and Pressure Vessel Code, Section IV - Rules for Construction of Heating Boilers; 2016.

B. ASTM A1011/A1011M - Standard Specification for Steel, Sheet and Strip, Hot-Rolled, Carbon, Structural, High-Strength Low-Alloy, High-Strength Low-Alloy with Improved Formability, and Ultra-High Strength; 2018a.

C. ASTM A554 - Standard Specification for Welded Stainless Steel Mechanical Tubing; 2021.

D. ASTM A653/A653M - Standard Specification for Steel Sheet, Zinc-Coated (Galvanized) or Zinc-Iron Alloy-Coated (Galvannealed) by the Hot-Dip Process; 2016.

E. ASTM A666 - Standard Specification for Annealed or Cold-Worked Austenitic Stainless Steel Sheet, Strip, Plate, and Flat Bar; 2022.

F. ASTM A924/A924M - Standard Specification for General Requirements for Sheet Steel, Metallic-Coated by the Hot-Dip Process; 2022.

G. ASTM B209 - Standard Specification for Aluminum and Aluminum-Alloy Sheet and Plate; 2021a.

H. ASTM B221 - Standard Specification for Aluminum and Aluminum-Alloy Extruded Bars, Rods, Wire, Profiles, and Tubes; 2021.

I. ASTM C920 - Standard Specification for Elastomeric Joint Sealants; 2018.

J. NFPA 54 - National Fuel Gas Code; 2021.

K. NFPA 70 - National Electrical Code; Most Recent Edition Adopted by Authority Having Jurisdiction, Including All Applicable Amendments and Supplements.

L. NFPA 96 - Standard for Ventilation Control and Fire Protection of Commercial Cooking Operations; 2021.

M. NHLA G-101 - Rules for the Measurement & Inspection of Hardwood & Cypress; 2019.

N. NSF 2 - Food Equipment; 2021.

O. NSF 51 - Plastic Materials and Components Used in Food Equipment; 2021.

P. NSF 7 - Commercial Refrigerators and Freezers; 2021.

1.4 SUBMITTALS

A. General: The Foodservice Design Consultant's design documents are not acceptable as submittal set.
   1. Submit electronic version of each Drawing document. Prepare drawings at the following minimum scales:
      a. Plans: 1/4-inches = 1-foot-0-inches
      b. Elevations: 1/2-inches = 1-foot-0-inches
      c. Sections: 1/2-inches = 1-foot-0-inches
      d. Submit electronic set of Product Data.
      e. Forward complete submittal package to expedite review and avoid construction delay. Incomplete submittals will not be reviewed.
      f. After return of reviewed submittal, make revisions as necessary and resubmit as required.
      g. Submit certification of operational tests per PART 3.2 - FIELD QUALITY CONTROL, herein.

B. Drawings:
   1. Submit dimensioned rough-in drawings of the project site showing Plumbing, HVAC and Electrical Service requirements. Drawings to indicate rough-in data for services based on specified equipment. Provide final exact locations, dimensions and characteristics of service and connections to suit requirements of Foodservice Equipment to be provided.
   2. Submit dimensioned fabrication drawings for custom fabricated equipment including plans, elevations, and sections, showing materials and gauges used.

3. Wiring Diagrams: Submit details of wiring for power and control systems; differentiate between Manufacturer Installed wiring and Field Installed wiring.

C. Product Data:
   1. Cover Sheet: The Cover Sheet must contain the following information to be valid and complete:
      a. Item number
      b. Manufacturer
      c. Model number
      d. Quantity
      e. Performance data
      f. Construction methods and materials
      g. Furnished accessories
      h. Installation methods and instructions, including curbs, legs, casters, etc.
      i. Power and fuel requirements with BTU ratings
      j. Water and drainage requirements, including required PSI
      k. Service connection requirements
      l. Exterior finishes
      m. Coordination notes to the Contractors not within the FSEC's scope of work
   2. Cut Sheets: A catalog Cut Sheet or brochure of all stock manufactured equipment (buy-outs) shall be collated with the aforementioned cover sheets.
      a. Cut Sheet shall be an original or first-generation copy.
      b. Fax copies will not be accepted.
      c. If a Cut Sheet or brochure is not obtainable for a specific buy-out item, insert a filler sheet with all required information in typewritten form.
   3. Maintenance Data: Provide operation manuals and maintenance data for Foodservice Equipment for inclusion in the Operation and Maintenance Manual.
   4. For District Furnished Equipment: The Contractor shall be responsible for providing the operation manuals and maintenance data. The Contractor shall coordinate with the District who will receive District Furnished Equipment.

D. Samples: Submit 8-inch squares of materials and 12-inch lengths of running members and trim for all exposed finishes, and for custom fabricated equipment.

1.5 QUALITY ASSURANCE

A. Manufacturers' Qualifications: Firms shall have been regularly engaged in the manufacture of Foodservice Equipment of the types, capacities, and sizes required, whose products have been in satisfactory use in similar service for no fewer than five (5) projects.

B. Installer's Qualifications: Installer shall have completed no fewer than five (5) Foodservice Installations similar in material, design, and extent to that indicated for this Project, which have resulted in satisfactory in-service performance.

C. Codes and Standards:
   1. NSF Standards: Comply with applicable National Sanitation Foundation (NSF) standards and recommended criteria including NSF 2 and NSF 7. Provide each principal item of Foodservice Equipment with a NSF Seal of Approval.

2. UL Labels: Provide Underwriters Laboratories, Inc. (UL) labels on prime electrical components of Foodservice Equipment. Provide UL "recognized marking" on other items with electrical components, signifying listing by UL, where available.
3. ANSI Standards: Comply with applicable American National Standards Institute (ANSI) standards for electric-powered and gas-burning appliances, for piping to compressed-gas cylinders, and for plumbing fittings including vacuum breakers and air gaps to prevent siphonage in water piping.
4. NFPA Codes: Install Foodservice Equipment in accordance with the following National Fire Protection Association (NFPA) codes:
   a. NFPA 54 - National Fuel Gas Code.
   b. NFPA 70 - National Electrical Code current adopted edition with State amendments.
   c. NFPA 96 - Removal of Smoke and Grease-Laden Vapors from Commercial Cooking Equipment.
5. ASME Boiler Code: Construct steam-generating and closed steam-heating equipment to comply with American Society of Mechanical Engineers (ASME BPVC-IV) Boiler and Pressure Vessel Code; Section IV for units not exceeding 15 psi or 250 degrees F, or Section I for higher pressure/temperature units.
6. Refrigeration: Use current refrigeration on all self-contained and remote refrigerated items including, but not limited to ice machines, refrigerators and freezers. The refrigerant shall be current, new (not recycled), and readily available for a minimum of ten (10) years. For further clarification refer to PART 2.6 - REFRIGERATION EQUIPMENT, herein.
7. Accessibility
   a. Where provided, check-out aisles, sales counters, food service lines, queues, and waiting lines shall comply with IBC Section 11B-227 and 11B-904.
   b. Foodservice aisles shall be a minimum of 36 inches wide.
   c. The top of tray slides shall be 28 inches minimum and 34 inches maximum above the finish floor or ground.
   d. Foodservice equipment required to be accessible shall conform to all reach requirements in IBC Figures 11B-308.2.1 - 11B-308.3.2 (IBC Section11B-308).
8. Space and elements within foodservice employee work areas shall meet the requirements of IBC Section 11B-203.9.
9. Lockers shall have latch and locking hardware that does not require tight grasping, tight pinching, or twisting of the wrist to operate. Provide shelf and pole at 48” max AFF and lower shelf at 15” min AFF (Reach requirements). Provide AT LEAST 5% of total lockers BUT NO FEWER THAN ONE OF EACH TYPE OF LOCKERS SHALL BE ACCESSIBLE per IBC Section 11B-811.
10. Guidelines for Seismic Restraint of Kitchen Equipment as published by SMACNA .
11. Welding per Nevada Fire Code

1.6 DELIVERY, STORAGE, AND HANDLING

A. Delivery: Deliver Foodservice Equipment in containers designed to protect the equipment and finish until installation. Make arrangements to receive equipment, when required, at the project site or to hold in a warehouse until delivery can be made to the job site.

B. Storage: Store Foodservice Equipment in the original containers and in a location to provide adequate protection to equipment while not interfering with other construction operations.

C. Handling: Handle Foodservice Equipment carefully to avoid damage to components, enclosures, and finish. Do not install damaged Foodservice Equipment. Replace and return damaged components to the Manufacturer.

D. District Furnished Equipment: The Contractor shall receive, accept, and store the District Furnished Equipment until installation. The Contractor shall assume responsibility for the equipment and its condition upon receipt of the equipment by him or his representative.

1.7 PROJECT CONDITIONS

A. Field Measurements: Take field measurements before ordering and fabrication, to assure accurate fit of fabricated equipment.

B. Available Services: Verify electrical service characteristics and water, steam, and gas service pressures. Provide pressure-regulating valves where required for proper operation of equipment.

1.8 SUBSTITUTION

A. Substitution of Materials and Equipment: Whenever a material, article, or piece of equipment is identified on the Drawings or in the Specifications by reference to manufacturers' or vendors' names, trade name, catalog numbers, or the like, it is so identified for the purpose of establishing a standard. Substitute items shall be submitted to District at least ten days before bid date for review and consideration. Items that are acceptable (with City's written approval) shall be so stated in an Addendum.

1.9 WARRANTIES

A. Special Project Warranty: The Contractor shall ensure that the Manufacturer of Refrigeration Compressors shall provide a written warranty signed by the Manufacturer, agreeing to replace or repair, within a five-year warranty period, Refrigeration Compressors with inadequate and/or defective materials and/or workmanship, including leakage, breakage, improper assembly, or failure to perform as required, provided Manufacturer's instructions for handling, installing, protecting, and maintaining units have been adhered to during warranty period. Two-year Labor warranty shall also be provided.

B. All Other Warranties: The warranty period for all items furnished (other than the aforementioned) shall be guaranteed against defects in workmanship and material for a minimum period of two (2) years. This warranty shall include both Parts and Labor.

C. The Contractor shall be responsible for returning all warranty cards to the Manufacturers as required. Should he fail to return the warranty cards, the Contractor shall be responsible for providing the same warranty to the District as required by the Manufacturer.

D. Refer to Section 017836 - Warranty and Bonds for warranty format.

PART 2 - PRODUCTS

2.1 MATERIALS

A. Stock Manufactured Items: Refer to ARTICLE 3.6 - EQUIPMENT SCHEDULE, herein.

B. Stainless Steel: Provide ASTM A666 / AISI Type 304 non-magnetic sheets, free of buckles, waves, and surface imperfections; Blend and regrain as required to effect matching and continuous finished product.
   1. Finish for exposed surfaces to be No. 4 polished, unless specified otherwise.
   2. Protective covering shall be provided on all polished surfaces of stainless-steel sheet work, and retained and maintained until time of final testing, cleaning, start-up, and Substantial Completion.

C. Galvanized Sheet Steel: Use only if specified; comply with ASTM specifications for 'zinc-coated' (galvanized) iron or steel sheets, coils and cut lengths; it shall be mild, low carbon steel, zinc coated; ASTM A653/A653M, except for extensive forming; ASTM A924/A924M, G90 zinc coating, chemical treatment. A-98 coating shall be 1.25 oz per square foot coating class, also known as 'commercial'.

D. Sheet Steel: Provide ASTM A1011/A1011M hot-rolled carbon steel.

E. Stainless Steel Tube: Provide ASTM A554, Type 304 with No. 4 polished finish. All tubing shall be round unless specified otherwise.

F. Aluminum: Provide ASTM B209 sheet and plate, ASTM B221 extrusions, 0.40-mil clear anodized finish where exposed, unless specified otherwise.

G. White Metal: Provide corrosion-resistant metal containing not less than 21 percent nickel. Make castings free from pit marks, runs, checks, burrs, and other imperfections; rough grind, polish, and buff to bright luster.
   1. In lieu of white metal castings, Type 302 18-8 stainless steel diecast or stamped may be used.

H. Plastic Materials and Components: Except for Plastic Laminate, provide plastic materials and components that comply with NSF 51.

I. Hardwood Work Surfaces: Provide laminated edge-grained hard maple (Acer Saccharum), NHLA G-101 First Grade with knots, holes, and other blemishes culled out, kiln dried at 8 percent or less moisture, waterproof glued, machined, sanded, and finished with NSF-approved oil sealer. Provide minimum 2-1/4-inch thickness unless specified otherwise.

J. Sound Deadening: Provide coating of sound deadening material at underside of all stainless-steel tops, drainboards, dishtables, and sinks. Sound deadening material to consist of NSF component smooth flowing Latex Sound Deadener, which is non-aging, does not become brittle and may be painted when dry.

K. Sealants: Provide ASTM C920, Type S, Grade NS, Class 25, Use NT. When fully cured and washed, sealant shall meet the requirements of the Food and Drug Administration Regulation 21 CFR 177.2600 for use in areas where sealant comes in contact with food.
   1. The District will select the color from the manufacturer's standard colors.
   2. Backer Rod shall be closed-cell polyethylene rod stock, larger than joint width.

L. Gaskets: Provide solid or hollow (not cellular) neoprene or PVC light gray gaskets, minimum 40 Shore A hardness, self-adhesive or prepared for either adhesive application or mechanical anchorage.

2.2 WELDING

A. Welding must comply with Nevada Fire Code

B. All welding shall utilize the heliarc method with welding rod of the same composition as the sheets or parts to be joined.

C. Welds shall be complete, strong, and ductile with all excess metal ground and joints finished smooth to match adjoining surfaces.

D. Welds shall be free of mechanical imperfections such as gas holes, pits, cracks, etc., and shall be continuously welded so that the fixtures shall appear as one-piece construction.

E. Butt welds made by spot solder and finished by grinding shall not be acceptable.

F. Spot welds shall have a maximum space of at least 1/4-inch length of the welding material at a maximum space of 4-inches from center to center. Weld spacing at the ends of the channel battens shall not exceed 2-inch centers.

G. In no case shall soldering be considered as a replacement for welding, nor shall any soldering operation be done where dependence is placed on stability and strength of the joint.

H. Welds made of spot-welding straps under seams and filling in with solder will not be acceptable.

I. Fixtures shall be shop fabricated of one piece and shipped to the job completely assembled whenever possible. Equipment too large to transport or enter the building as one piece shall be constructed so that the field joints can be welded at the job site.

J. All body joints made in the field shall be closely butted together, pulled together in the field and tightly belted on the inside or a concealed location.

K. All exposed joints shall be ground flush with adjoining material and finished to harmonize therewith.

L. Whenever material has been sunk or depressed by welding operation, such depression shall be suitably hammered and peened flush with the adjoining surface and, if necessary, again ground to eliminate low spots. In all cases, the grain of rough grinding shall be removed by successive fine polishing operations.

M. All unexposed welded joints on undershelves of tables or counters in stainless steel construction shall be suitably coated at the factory with an approved metallic based paint.

N. After galvanized steel members have been welded, all welds and areas where galvanizing has been damaged shall have a zinc dust coating applied.

O. Butt joints and contact joints, wherever they occur, shall be close fitting and shall not require a filler. Wherever sheared edges occur, they shall be free of burrs, fins, and irregular projections, and shall be finished to obviate all danger of cutting or laceration when the hand is drawn over them. In no case shall overlapping materials be acceptable where miters or bull nosed corners occur.

P. The grain of polishing shall run in the same direction on all horizontal and on all vertical surfaces of each item of fabricated equipment except in the case where the finish of the horizontal sections of each shall terminate in a mitered edge. Where sinks and adjacent drainboards are

equipped with a splash, the grain of polishing shall be consistent in the direction throughout the length of the splash and sink compartment.

Q. Bolts, screws, nuts and washers shall be of steel, except where brass or stainless steel is fastened, in which case they shall be of brass or stainless steel, respectively. Screws shall be 2-inch long, pan head Philips No. 12. Where dissimilar metals are fastened, nuts, bolts, screws and washers shall be of similar grade metal. The spacing and extent of bolts and screws shall be such as to ensure suitable fastening and prevent buckling of the metals fastened.

2.3 ELECTRICAL

A. Electrical Requirements: Confirm available Electrical Services, such as actual voltages available, number of phases, and number of wires, at the project site, before submitting product data and placing orders.
   1. Should requirements indicated on Drawings and in ARTICLE 3.6 - EQUIPMENT SCHEDULE, herein, be of larger sizes or higher standards than are required by manufacturer or by governing authorities having jurisdiction, requirements indicated on Drawings and in ARTICLE 3.6 - EQUIPMENT SCHEDULE, herein, shall govern.
   2. Should requirements indicated on Drawings and in ARTICLE 3.6 - EQUIPMENT SCHEDULE, herein, be of smaller sizes or lower standards than are required by manufacturer or by governing authorities having jurisdiction, requirements of manufacturer or of governing authorities having jurisdiction shall govern.
   3. All costs for compliance with requirements of manufacturer and of governing authorities having jurisdiction shall be included in the Contract Sum. Rulings and interpretations of code enforcing agencies shall be included in such requirements.

B. Circuits and Rough-Ins:
   1. Permanent connections to the project site's Electrical Service shall be made in accordance with requirements as specified in DIVISION 26 - ELECTRICAL and shall comply with Nevada Electrical Code.
   2. Make connections only at a junction box, by conductors in metallic conduit. Minimum size of junction boxes (unless specified otherwise) shall be 4-11/16-inches square and 1-1/2-inches deep, with 1/2-inch and 3/4-inch knockouts.
   3. Utility chase areas accommodating junction and pull boxes shall be a minimum of 18-inches square.
   4. Coordinate exact locations, types, and quantities of conductors and sealing of fittings with Electrical Drawings and with ARTICLE 3.6 - EQUIPMENT SCHEDULE, herein.
   5. In cases where equipment is directly connected, provide a length of flexible steel, neoprene-jacketed, Seal-Tite conduit, Anaconda Type UA, or equal, complete with approved liquid-tight contactors on each end, designed to provide electrical grounding continuity; make input connection as short as possible, not to exceed 36-inches.
   6. Provide proper and complete grounding of all metallic Foodservice Equipment.

C. Wiring:
   1. Exposed wet area applications shall be rigid galvanized steel conduit except for flexible connections. Thin wall conduit (EMT) shall not be used for wet area application. Exposed outlet boxes shall be Stainless steel with threaded hubs.
   2. Exposed flexible connections shall be flexible steel, neoprene-jacketed, Seal-Tite conduit, Anaconda Type UA, or equal, complete with approved liquid-tight contactors on each end, designed to provide electrical grounding continuity.

3. Wiring for built-in strip heaters and immersion type elements shall have UL-listed insulation, not less than 300 volt rated, with listed nickel wire. Extend wiring in raceways or conduits to the junction or pull boxes with not less than 600-volt rated insulated wire.
4. Refrigerator and freezer cabinets: Provide conduit as necessary to connect internal components to the junction or pull boxes, and as follows.
   a. Internal wiring shall be UL-listed, rubber-covered 600-volt rated conductor, except for door heaters which shall be chrome wire with silicone braided jacket having resistance of 10.4 watts per lineal foot.
   b. For freezer applications, provide wiring in rigid or flexible Seal-Tite Flex or equal (no known equal) EMT.
5. Outlets, including all convenience outlets, lighting receptacles (rubber or porcelain), and door switches shall be mounted within approved boxes. Convenience outlets for evaporators shall be twist-lock type. Solid connections for freezer evaporators shall be vapor tight.
6. Door switches for hinged doors shall be Arrowhart No. 4039 or equal (no known equal); for sliding doors, provide UL-listed toggle switches.
7. Heating element controls for custom fabricated equipment, such as custom fabricated plate warmers shall be provided as follows.
   a. Uninsulated cabinets with or without doors: provide 3-level switch.
   b. Open front cabinets with or without insulation: provide variable controller.
   c. Insulated cabinets with doors: provide thermostat.

D. Starters, Switches and Controls: Provide starters, motor controls, switches, remote controls, and transformers as necessary.
   1. All switches shall be located out of the heat zone. If ambient temperature will be above 100 degrees Fahrenheit, provide for adequate ventilation.
   2. Each motor driven appliance or electrical heating unit shall have a heavy-duty control switch, magnetic contactor or starter. Provide electrical controls, switches or other components being furnished loose by the manufacturer.
   3. Provide starters for across-the-line start, with thermal overload protection and manual overload reset. Push button stations shall be mounted in starter covers, except where necessary for starters to be mounted in a remote location.

E. Convenience and Power Outlets: Provide all cut-outs, outlet boxes, cover plates, and all service fittings as necessary in Custom Fabricated Foodservice Equipment as shown on document drawings and in ARTICLE 3.6 - EQUIPMENT SCHEDULE, herein; provide necessary conduits to extend to the junction box or pull box of the project site's Electrical System.
   1. Outlets having a specific voltage for a single purpose application shall be of such design that plugs designed for other applications will not fit.
   2. Verify that outlets will match appliance plugs as indicated on Electrical Drawings and in ARTICLE 3.6 - EQUIPMENT SCHEDULE, herein. Replace cords and plugs if necessary.
   3. Electrical outlet devices shall be National Electrical Manufacturers Association (NEMA) Specification Grade and manufactured by Hubbell, Square D, Bryant, General Electric, Pass and Seymour, Arrowhart or equal.

F. Cords and Plugs: Provide UL-listed cords and plugs for stock manufactured and for custom fabricated equipment.
   1. Cords are to be rubber-covered, three-wire cord of appropriate current capacity and appropriate length to suit use.

2. Plugs are to be three-prong, ground type of appropriate NEMA configuration for electrical characteristics of equipment and serving outlet.

G. Light Fixtures: Where light fixtures are specified as integral with Foodservice Equipment, provide sockets, lamps and ballasts as appropriate. For fluorescent fixtures, provide DeLuxe Warm White lamps, unless specified otherwise.

H. Internal Wiring of Custom Fabricated Fixtures or Equipment:
1. Obtain and pay for all Permits and Fees for inspection and approval of Electrical Work built into custom fabricated fixtures or equipment, for which a permit is required. Proof of inspection shall be attached to, and visible on, fixture.
2. All internal wiring built into, or forming an integral part of, a unit of custom fabricated fixtures or equipment shall be completely wired to a junction box built into the unit, ready for final connection to the project site's Electrical System as specified herein.
3. Licensed Electricians shall perform all internal wiring of fixtures and equipment.

I. The Electrical Contractor shall be responsible for all inter-connections between systems and the foodservice equipment. Refer to PART 3.1.H - FINAL CONNECTIONS, herein.

2.4 PLUMBING

A. All dishwashers, hose reels, janitor sinks, garbage disposals, pre-rinse sprays and water supply units are to be fitted with mixing valve and pressure-reducing valve (per manufacturer requirements), to be supplied by the FSEC and installed by the Plumbing Contractor.

B. All counter-top equipment requiring water connections must be provided with pressure-reducing valve per 2018 Nevada Plumbing Code

C. Provide charcoal water filter for all ice and water stations, ice machines, tea and coffee machines.

D. The Plumbing Contractor shall be responsible for all inter-connections between systems and the foodservice equipment. Refer to PART 3.1.H - FINAL CONNECTIONS, herein.

E. The Plumbing Contractor shall install electrical shut-off gas valve(s), provided by the FSEC, in an accessible location above the ceiling.

2.5 HEATING EQUIPMENT

A. Gas-Heated Appliances: All Gas-Operated and -Heated Equipment shall conform to applicable American Gas Association (AGA) standards and to all applicable Local and State Health Department regulations.

B. Steam-Heated Appliances: All Steam-Heated Equipment shall be a self-contained assembly complete with control valves located in a readily accessible position.

C. Heating Equipment Controls: Wherever Thermostatic Controls for Gas-, Electric-, or Steam-Heating Equipment are indicated or necessary, provide controls complete and of materials, size, or rating as required.

D. Cleaning Provisions: Heating Equipment shall be readily removable for cleaning.

2.6 REFRIGERATION EQUIPMENT

A. Refrigeration Equipment, General: Provide refrigeration condensing units of size and capacities as indicated, consisting of compressors, condensers, receivers, motors, mounting bases, vibration

isolators, refrigeration components, safety devices, electrical controls, refrigerant, and protective controls. Units are to be charged with refrigerant, all factory assembled and tested.

1. Refrigerant: Utilize refrigerant with an ozone depleting potential of 0. All refrigerants to meet all current codes. The following refrigerants are listed as minimums:
2. R-448 Low to medium temperature
3. R-448 Medium temperature
4. R-448 High temperature
5. R-448 Food grade
6. Connections: Provide quick-connect-type piping connections to receive piping from evaporator coils.
7. Outdoor Mounting: Provide weather-tight housing and low ambient controls for units mounted outdoors.

B. Refrigerant Piping: Type ACR copper tubing, hard temper, with wrought fittings and silver solder joints. Insulate suction lines with 1/2-inch pre-molded foamed plastic insulation. Use a closed cell Armaflex with a 3/4" wall. Ensure the Heat Trace is installed prior to the insulation installation.

C. Electrical Wiring: Provide required wiring between electrical rough-in and refrigeration units for proper operation.

D. Plumbing Piping: Provide required water and drain piping between plumbing rough-in and refrigeration units for proper operation.

E. Refrigeration Specialties: Provide as indicated refrigerant dryer, liquid line solenoid valve, suction line filter, expansion valve, and water regulating valve (for water-cooled condensers only).
1. Provide pump down control circuit consisting of thermostat and solenoid valve.
2. Maintain box temperature from thermostat and liquid line solenoid valve; control compressor from suction pressure.

2.7 EXHAUST HOODS

A. Fabricated Exhaust Hoods: Fabricate to specified UL-listed manufacturers specifications. All hoods must comply with Nevada Mechanical Code.

B. Grease Removal: Provide removable grease baffles, with drip-channel gutters, drains, and collection basins unless specified otherwise.

C. Light Fixtures: Provide LED light fixtures, with vapor-tight sealed lens, and stainless steel conduit where exposed for wiring.

D. Exhaust Duct: Stainless steel with finish to match hood finish where exposed and galvanized steel where concealed. Provide one-hour rated shaft or equal for Type 1 hoods.

E. Stainless Steel Wall Flashing: Provide floor-to-ceiling, full width wall flashing under all exhaust hoods where a non-combustible wall surface is required.
1. Where walls enclose hoods, those walls shall be fully wrapped with stainless steel wall flashing.
2. Wall flashing shall be a minimum Type 304, 18-gauge stainless steel.
3. Sheets shall be set vertically with seams running perpendicular to the ceiling and floor.
4. Joints shall be butt joints.
5. Seams and ends shall be capped with appropriate stainless-steel T-Molding or End Molding.

6. Wall flashing shall extend a minimum of 3-inches above hood line and to below top of base molding.
7. The FSEC shall provide appropriate holes (by hydraulic knockout) and utility cutouts no greater than 1/4-inch of stub-out size.
8. Where electrical outlets require a square or rectangle cutout, the opening must be fully covered by the faceplate.
9. Attach to walls with approved mastic.

F. Trim: Provide and install stainless steel trim to ceiling and adjacent walls, fabricated of the same gauge and finish as the Exhaust Hood.

G. The FSEC shall provide and install any additional support membrane to provide a complete installation of the exhaust hood. He shall also be responsible to weld collars to exhaust ducts.

H. If make-up air duct is integral to exhaust hood, FSEC shall be responsible for final connection from ductwork to make-up air collar.

2.8 MANUFACTURED PRODUCTS

A. Manufactured Products, General: Provide Manufacturer's standard materials and equipment as specified, complete with all necessary and recommended fittings, fixtures, and accessories.
1. Manufactured items shall comply with applicable Seismic requirements.
2. Manufactured items shall conform to applicable NSF standards and to all applicable Local and State Health Department regulations.
3. Comply with all applicable rules and regulations pertaining to adequate protection from and guarding of moving parts of otherwise hazardous equipment.
4. Electric-Operated and Electric-Heated Equipment shall conform to NEMA standards and be UL-listed and UL-labeled.
5. Standard Steam-Heated Equipment shall be manufactured in accordance with ASME code requirements and bear the ASME label.
6. Gas-Burning Equipment shall be manufactured in compliance with applicable AGA standards and bear the AGA label. Burners for gas-heated equipment shall be equipped with automatic lighters. Oven burners and other concealed burners shall have automatic safety pilots.
7. Provide Pressure Regulators for all Gas-Operated and Gas-Heated Equipment as recommended by the manufacturer and to suit service pressures.

B. Refrigerator Hardware: Heavy-duty die-cast zinc, chrome-plated and polished.
1. Hinges shall be edge mounted, self-closing type.
2. Latches shall be edge mounted, arranged for locking devices.

C. Handles and Pulls: Provide stainless steel Handles with No. 4 finish, or die-cast zinc with polished chrome-plated finish. Provide die-stamped stainless steel Pulls, recessed rectangular type, with beveled edge frame.

D. Door Slides: Provide stainless steel Door Slides with minimum load capacity of 100 lbs. per pair, and with positive doorstop. Provide stainless steel ball-bearing rollers.

E. Hinges: Provide stainless steel Hinges, continuous type or butt type as indicated.

F. Sliding Door Hardware: Provide extruded aluminum Door Track. Provide galvanized steel Door Sheave with nylon surface and ball-bearing inner races. Provide stainless steel Bottom Guide Pins, spring loaded.

G. Adjustable Shelf Supports: Provide stainless steel Shelf Supports, snap-in type, and stainless steel Brackets with countersunk mounting holes.

H. Catches: For hinged doors, provide permanent magnetic Catch of sufficient strength to hold door shut.

I. Locks: Provide Manufacturer's standard brass 5-pin cabinet-type lock; provide two keys for each lock, keyed separately.

J. Lever Drains: Provide 2-inch, heavy cast-bronze body, removable flat stainless steel strainer, twist handle waste outlet with support bracket and one-piece connected chrome-plated brass overflow.

K. Casters: Provide minimum 5-inch diameter wheel casters, with 1-1/8-inch tread width, complying with NSF standards. Provide sealed, self-lubricating bearings bright zinc-plated steel disc wheels, and solid neoprene or polyurethane non-marking tires. Provide foot brakes on two (2) casters of four (4) required per unit unless specified otherwise.

2.9 CUSTOM FABRICATED EQUIPMENT AND FIXTURES

A. Custom fabricated items shall comply with applicable Seismic requirements.

B. General:
1. Fasteners: No exposed screw or bolt heads will be acceptable. Rivets, if specified, shall be countersunk and ground flush, and of the same material as the pieces joined together. Butt joints made by riveting straps under seams and then filling with solder will not be accepted.
2. Rolled Edges: Rolled Edges shall be approximately 1-1/2-inch diameter, with corners bull nosed, ground and polished.
3. Bends: All horizontal and vertical corners shall be coved with radius bends of 1/2-inches or larger.
4. Corners: All corners shall be mitered and fully welded, ground, and polished. Butt joints at corners will not be accepted unless specified otherwise.
5. Closures: Provide formed stainless steel to close and finish all fixtures, backsplashes, or shelves, or entire rear of unit, or the ends flush to walls or adjoining fixtures. Closures shall be no greater than 1/8-inch gap between splash and wall.

C. Framing:
1. Mount tops on 1-1/2-inch by 1-1/2-inch by 1/8-inch galvanized angle iron, or 4-inch wide by 12-gauge galvanized channels.
2. Mount dishtables and drainboards on 4-inch wide by 14-gauge stainless steel channels.
3. Run framework around entire perimeter of unit, and cross brace on 30-inch centers.
4. For dishtables and drainboards, run framing from front to back at each leg location, and run additional channel lengthwise, located at center of table width and welded to leg channels.
5. Fasten framing to underside of top surfaces with 1/4-inch studs welded at approximately 12-inch centers.
6. Provide each stud with suitable chrome-plated lock washers and cap nuts, and make stud lengths such that cap nuts can be made up tight bringing top down snugly to framing.

D. Legs and Cross Rails:
   1. Construct legs of 1-5/8-inch Outer Diameter, 16-gauge stainless steel tubing.
   2. Provide fully enclosed stainless steel bullet shaped adjustable feet of Type 302 or Type 304 stainless-steel exterior, not less than 1-1/2-inches in diameter, threaded for adjustment of 1-inch up or down without any threads showing.
   3. Fasten leg to 4-inch-high stainless-steel enclosed gusset, with top completely sealed by means of stainless steel plate.
   4. Fasten legs to sinks by means of stainless steel enclosed gussets welded in place, sanitary type, stainless-steel, reinforced with bushings and having set screws for securing legs.
   5. Fasten legs to metal tops and dishtables with stainless steel enclosed gussets, as above, welded to stainless-steel channels 14-gauge or heavier.
   6. Fasten legs to wood top tables by means of welding to stainless-teel channels anchored to top with screws.
   7. Weld gussets continuously to bottom of unit framing.
   8. All equipment longer than seven (7) feet shall be provided with a minimum of six (6) legs.

E. Metal Tops:
   1. Fabricate of 14-gauge stainless steel, one-piece welded construction, with exposed edges rolled and with corners bull nosed.
   2. Reinforce on underside with galvanized steel channels welded in place so tops can support heavy weights without deflection. Provide cross braces at not more than 30-inches on center.
   3. Where tops are adjacent to walls or adjoining equipment, provide integral splashes with all corners, both vertical and horizontal, coved a minimum of 1/2-inch radius.
   4. Splashes shall be a minimum of 6-inches high including a 1-inch horizontal return to wall and 1-inch vertical drop (for 'Z' clip installation) and enclosed ends.
   5. Field joints in tops are to be sanitary, tight and without open seams, by means of welding or by properly designed draw fastenings, or commercial joint material to suit the purpose required; 1/8-inch tolerance for silicone maximum.
   6. For countertop equipment, provide hydraulic knock out and grommet for utility lines at countertop or sides or rear.

F. Cabinet Bodies:
   1. Fabricate of 18-gauge stainless steel, with end panels formed with round corners for free-standing units, and square corners for fixtures that adjoin walls or other fixtures.
   2. Provide 90-degree retentions on end panels at front and rear, turned in toward body of cabinet and welded for reinforcement.
   3. For cabinets with open shelving, provide double-wall inner panels.
   4. Weld ends to horizontal angle or channel members to form integral cabinet base.
   5. Provide backs of same material as ends, with vertical edges turned in to match edges of ends.
   6. Weld, making flush joints.
   7. Provide all cabinets with full-height corner bumpers, wrapped around corner 2" each side, and crimped to cabinet face.

G. Dishtables and Drainboards:
   1. Fabricate of 14-gauge stainless steel, with exposed edges formed into 1-1/2-inch by 190-degree rolled rim approximately 3-inches high.

2. Provide built-in pitch to tubs of 1/2-inch minimum.
3. Provide minimum 10-inch high backsplashes including 2-inch return on 45-degree angle, 1-inch horizontal return to wall and 1-inch vertical drop with offset (for 'Z' clip installation) and enclosed ends, or 1-1/2-inch diameter rolled rim, as indicated.
4. Construct the front rim and backsplash of the drainboard on a continuous level plane with the sink it adjoins.
5. Support drainboards 36-inches and longer with 1-5/8 inch outer diameter legs and gusset.
6. Cove all corners, both vertical and horizontal, a minimum of 3/4-inch radius.

H. Sinks:
1. Fabricate from 14-gauge stainless steel, with interior corners rounded to a 1-inch radius, both horizontally and vertically, forming cove in bottom.
2. Construct sink with butt-edge joints welded, ground smooth and polished so joints are imperceptible.
3. Finish sinks to match stainless steel top. Where sink bowls are exposed below countertop, finish sink exterior to match top.
4. Divide multiple compartment sinks with double-wall, 16-gauge stainless steel partitions rounded to 1/2-inch radius on top and having corners rounded the same as other corners in sinks. Provide multiple compartment sinks with continuous face at exposed front.
5. Provide back, bottom, and front of one continuous piece with no overlapping joints or open spaces between compartments.
6. Pitch bottom of each compartment, and crease to die-stamped recess to receive lever-type drain, without use of solder, rivets, or welding.
7. Finish front and exposed ends of sink countertop with 1-1/2-inch, 190-degree rolled edge.
8. Finish back and ends adjacent to walls or other fixtures with backsplash.
9. Punch backsplash to receive wall-mounted faucets.
10. For sinks in worktops, construct as above but omit roll edges and backsplashes. Fabricate bowl to be flush with work surface.
11. Provide stainless steel wall flashing from finished floor to ceiling behind all sinks where FRP or ceramic tile is not indicated.
12. Sink covers to be constructed of 14ga S/S construction with grommet finger hole. Covers will be fabricated to accommodate any overflow drain in sink and will fit flush over sink.

I. Drains, Wastes and Faucets:
1. Provide 2-inch, heavy cast bronze body, with removable flat stainless steel strainer, twist handle waste outlet with support bracket and one-piece connected chrome-plated brass overflow.
2. Provide 3-1/2-inch crumb cup waste outlets in all die-drawn inset type sinks.
3. Faucets: As specified.
4. Dipperwells: As specified.

J. Undershelves:
1. Construct of 16-gauge stainless steel.
2. Open Base Shelving: Edges shall be rolled down on open sides, with a 2-inch turn-up on rear and ends where adjacent to walls and other equipment.
   a. Neatly notch corners and weld to legs.
   b. Reinforce shelving longitudinally with 14-gauge formed channel welded to underside.
   c. In fixtures with open bases, provide shelves notched a full 90 degrees and welded tightly to legs, with tight joints at all intersections of shelf and leg.

3. Bottom Shelves: Extend forward and turn down at front so as to be flush with front facing of cabinet.
4. Fixed Intermediate Shelves: Weld to front stiles and to 16-gauge stainless steel brackets so that shelf is 1-inch away from back and ends of cabinet.
5. Adjustable Shelves: Channel on all four (4) sides, weld corners, and mount on removable stainless steel standards.
6. Construct removable shelves as above, fit over cross rails and do not exceed shelving sections of 30-inches long; where one section abuts another, turn down edges 1-inch.
7. Enclosed Base Shelving: Turn up at back and sides and feather slightly to insure a tight fit to enclosure panels.

K. Overshelves:
1. Construct of 16-gauge stainless steel.
2. Set shelves mounted over equipment not adjacent to walls on 1-5/8-inch by 16-gauge stainless steel tubular standards fitted with stainless steel base flanges.
3. Completely weld top of tubular standards to 16-gauge stainless support channels; run channels full width of overshelf.
4. Where overshelves are mounted above tables, run 1/2-inch steel tension rods through counter-tops, stanchions, and reinforcing angle framing, and secure with nuts and lock washers to assure stable sway-free structure.
5. Where shelves are mounted over drainboards or dishtables, mount on upturned rolled edges omitting flanges, and scribe lower end of tube to match contour of roll. Secure as in table-mounted method.

L. Cabinet Doors:
1. General:
   a. Fabricate with double-pan construction of stainless steel with edges formed into a channel extending around all sides, forming doors 3/4-inch thick.
   b. Fabricate outer pans of 18-gauge stainless steel with corners welded, ground smooth, and polished.
   c. Include wood fiber sound deadening material within door assembly.
   d. Fabricate inner pans of minimum 20-gauge stainless steel, fitted tightly into outer 18-gauge pan.
   e. Fully weld pans together.
   f. Where single pan-type doors are indicated, fabricate of 16-gauge stainless steel, reinforced and stiffened with closed hat sections to prevent flexing.
2. Sliding Doors:
   a. Mount doors on large ball bearing, quiet rollers in 14-gauge stainless overhead tracks. Provide resilient stops.
   b. Construct sliding doors to be removable without use of tools, for cleaning purposes.
   c. Provide U-shaped or Loop stainless steel handle on each door.
   d. Where specified, provide doors with locks.
   e. Exterior doors shall be provided with weatherproof cover.
   f. All sliding doors to be provide with pushbutton activator.
3. Hinged Doors:
   a. Mount hinged doors on stainless steel, continuous-type hinges.
   b. Construct hinged doors so that face is flush with cabinet body.

c. Provide each door with U-shaped or Loop stainless steel surface door pull and magnetic catches.
d. Where indicated, provide doors with locks.
e. Provide permanent magnetic catch of sufficient strength (5 lb max opening force) to hold door shut.

M. Drawers:
1. Construct front of double-pan stainless steel, 16-gauge exterior and minimum 20-gauge interior.
2. Size: Minimum 5-inches deep, 1-inch thick, with other dimensions as specified and to suit installation.
3. Provide cylinder lock for drawers, unless specified otherwise.
4. Fasten drawer suspension guides to 18-gauge stainless steel housing suspended from angle framing under fixed top.
5. Mount drawers on fabricated 16-gauge stainless steel interlocking channel supports with large size, quiet ball-bearing wheel suspension and stops to prevent drawers from being pulled out of fixture.
6. Construct support slides so that drawers may be pulled out minimum of two-thirds of drawer length and support heavy loads without deflection. Drawers shall be easily removable without the use of tools.
7. Support slide to have minimum load capacity of 150 lbs per pair.
8. Provide recessed full-length stainless steel handle for each drawer.
9. For removable pan-type drawers, fabricate as a rigid self-supporting unit. Drawer body shall have flanged top for support in drawer frame and shall be as specified above. Provide replaceable, full neoprene bumpers.
10. For drawers in refrigerated sections, provide removable-type, perforated body, mounted on large ball-bearing wheels in flat tracks. Wheels shall be similar to heavy-duty urethane roller skate wheels. Wheels and bearings shall be corrosion-resistant, longwearing material, grease packed before assembly. For drawers in refrigerated sections, provide full-perimeter, soft gaskets.
11. Liner to be lift-out type, one-piece construction, and die stamped of 20-gauge stainless steel, with inside radiused corners.
12. Drawer pans shall be removable without removing frame from fixture.

N. Wall Shelves:
1. Construct of 16-gauge stainless steel with 1-1/2-inch roll on front and exposed ends, and with 2-inch turn-up on back and ends where adjacent to walls or other fixtures.
2. Miter and weld all corners.
3. Construct wall brackets of 14-gauge stainless steel with 1-1/2-inch flange at wall and completely welded to underside of shelf.
4. Fasten each bracket to wall with a minimum of two stainless steel pan head screws, Philips No. 12, 2-inch long.
5. Install so that shelf sets 1-inch away from wall.
6. Adjustable shelf supports shall be snap-in type with stainless steel brackets with countersunk mounting holes.
7. Wall backing is required.

O. Wall Backing: Where indicated on Foodservice Consultant's drawings, provide wall backing to run six inches beyond full length of equipment item at each side.

1. For Wood Frame Construction: The General Contractor shall provide and install wood blocking. Secure wall blocking in between studs.
2. For Metal Frame Construction: The FSEC shall provide and the General Contractor shall install metal backing. Metal backing shall be at least 14-ga galvanized steel. Secure wall backing to studs.

P. Cold Pans:
1. Fabricate from 16-gauge stainless steel lining and 20-gauge stainless steel casing.
2. Cove interior vertical and horizontal corners.
3. Insulate sides, ends, and bottom with material thermally equal to 2-inch thickness of fiberglass.
4. Sweat 1/2-inch-diameter copper cooling coils to underside cold pan, and seal in thermomastic material.
5. Turn down countertop (and/or flange) 1-inch into pan; install completely concealed 1-inch-wide plastic breaker strip; install 1-inch chrome-plated drain with plug.
6. Provide 1/2-inch high false bottom of 16-gauge perforated stainless steel in removable sections.
7. All cold pans, ice pans, refrigerated pans and cabinets shall be provided with breaker strips where adjoining top of cabinet face materials to prevent transfer of cold.
8. Where cold pans and other inserts are to be installed in cabinet bases, provide apron the full depth of insert and of same material as cabinet body with reinforced openings as required; form in openings on all sides.

Q. Insert Pans:
1. Include standard pans and adaptive dividers on all custom-fabricated insert pans (refrigerated, ambient and hot) to provide optimal use of the insert pans. Standard pan size to be determined prior to submittal of shop drawings.

R. Casters:
1. Heavy-duty, NSF-approved, sealed wheel and swivel ball bearings, solid or disc wheel, with greaseproof neoprene or polyurethane tire, and bright chrome plated finish on steel.
2. Wheel diameter: 5-inch, minimum.
3. Tread width: 1-3/16 inch, minimum.
4. Capacity per caster: 250 pounds, minimum.
5. Include stainless steel rotating wheel guard.
6. A minimum of two (2) casters shall have brakes.

S. Corner Guards: All exposed corners shall be provided with 14-gauge S/S corner guard, full height to ceiling. Guards to be full height corner bumpers, wrapped around corner 2 inches each side, and crimped to the face of the wall or fixture.

T. Curbs: Construct of 16-gauge galvanized steel, fully welded and reinforced where necessary.

U. Sneeze Guards:
1. Frame to be constructed of 1-1/2" Outer Diameter, stainless steel tubing; stainless steel fittings to be welded, ground smooth and polished; no exposed screw heads, bolt heads, or solder joints permitted.
2. Front and end panels to consist of 1/4" tempered glass trimmed by glazing into a 3/8" by 3/8" U-shaped stainless steel channel; panels to be removable from frame without tools.

3. Shelves to consist of 3/8" tempered glass trimmed by a snug-fitting gasket seated firmly against round tubing frame.

V. Wall Flashings: Provide wall flashings where indicated on Foodservice Consultant's drawings.
1. Wall flashing shall be a minimum Type 304, 18-gauge stainless- steel.
2. Sheets shall be set vertically with seams running perpendicular to the ceiling and floor.
3. Joints shall be butt joints.
4. Seams and ends shall be capped with appropriate stainless steel T-Molding or End Molding.
5. Wall flashing shall extend a minimum of 12-inches below splash.
6. The FSEC shall provide appropriate holes (by hydraulic knockout) and utility cutouts no greater than 1/4-inch of stub-out size.
7. Where electrical outlets require a square or rectangle cutout, the opening must be fully covered by the faceplate.
8. Attach to walls with approved mastic.
9. Provide and install stainless steel trim to ceiling and adjacent walls, fabricated of the same gauge and finish.
10. Where it is necessary to remove all or part of an existing wall flashing to allow modification work, replace with stainless steel wall flashing with appropriate molding.

PART 3 - EXECUTION

3.1 INSTALLATION

A. Installation, General: Set each item of non-mobile and non-portable equipment securely in place, level, and adjust to correct height.
1. All items shall comply with applicable Seismic requirements.
2. Anchor products to supporting substrate where indicated and where required for sustained operation and use without shifting or dislocation.
3. Conceal anchorages where possible.
4. Adjust countertops and other work surfaces to level tolerance of 1/16-inch maximum offset, and maximum variation from level or indicated slope of 1/16-inch per ft.
5. Where indicated or required for safety of equipment operator, anchor equipment to floor or wall. Provide legs with adjustable flanged foot where equipment is indicated to be anchored to floor. Install two (2) anchors on each foot and cap off with stainless steel acorn nuts.

B. Field Joints: Complete field-assembly joints (joints that cannot be completed in shop) by welding, bolting-and-gasketing, or similar methods as indicated.
1. Grind welds smooth and restore finish.
2. Set or trim gaskets flush, except for T-gaskets as indicated.

C. Enclosed Spaces: Treat spaces that are inaccessible after equipment installation by covering horizontal surfaces with powdered borax at rate of four (4) ounces per square foot.

D. Closure Plates and Strips: Install where required, with joints coordinated with units of equipment.

E. Knock outs: Provide hydraulic knock outs in foodservice equipment, where required, to run plumbing, electric, gas, or steam lines through equipment items for final connections.

F. Sealants and Gaskets: Install completely around each unit to make joints airtight, watertight, vermin-proof, and sanitary for cleaning purposes.

1. In general, make sealed joints not more than 1/8-inch wide, and stuff backer rod to shape sealant bead properly, at 1/4-inch depth.
2. Shape exposed surfaces of sealant slightly concave, with edges flush with faces of materials at joint.
3. At internal-corner joints, apply sealant or gaskets to form a sanitary cove, of not less than 3/8-inch radius.
4. Provide sealant-filled or sealant-gasketed joints up to 1/2-inch joint width and metal closure strips for wider joints with sealant application each side of strip.
5. Anchor gaskets mechanically or with adhesives to prevent displacement.
6. All fixtures adjacent to wall shall be sealed to wall as specified.

G. Final Connections:
1. Final hook-ups are not part of the scope of work of the FSEC. All final hook-ups (plumbing, mechanical and electrical) shall be part of the General Contractor's area of responsibility. The General Contractor shall make allowances for elbows, traps, etc., and shall make final connections on the job, supply all necessary valves, traps, steam traps, faucets, starting switches for motors, etc., except where specifically noted otherwise in the written specifications.
2. The Contractor shall be responsible for all inter-connections between systems and the foodservice equipment.

H. Installers shall be responsible for verifying dimensions.

3.2 FIELD QUALITY CONTROL

A. Testing: Coordinate start-up of Foodservice Equipment when service lines have been tested, balanced, and adjusted for pressure, voltage, and similar considerations. Do not operate steam lines until they have been cleaned and treated for sanitation. Before testing, lubricate each equipment item in accordance with manufacturer's recommendations.

B. Test each item of operational equipment to demonstrate that it is operating properly and that controls and safety devices are functioning.

C. Repair or replace equipment found to be defective in its operation, including units that are below capacity or operating with excessive noise or vibration.

D. Testing is to include any service charges due to improper installation, lack of proper connectors, or missing equipment.

3.3 CLEANING

A. After completion of installation and other major work in Foodservice areas, remove protective coverings, if any, and clean Foodservice Equipment, internally and externally.
1. Restore exposed and semi-exposed finishes to remove abrasions and other damages; polish and buff exposed-metal surfaces and touch-up painted surfaces.
2. Replace work that cannot be successfully restored.

B. Final Cleaning: After testing and start-up, and before time of Substantial Completion, clean Foodservice Equipment, and leave in condition ready for use in Foodservice.

3.4 ADJUSTMENT OF EQUIPMENT AND DEMONSTRATION

A. Turn on all mechanical equipment, test for leaks, poor connections, inadequate or faulty performance and correct if necessary; adjust for proper operation.
   1. All thermostatically controlled equipment and equipment with automatic features shall be operated for a sufficient length of time to prove controls are functioning as intended.

B. At a time and date selected by the District, the FSEC shall arrange for a demonstration of all new mechanical equipment for the District and his appointed representatives. These demonstrations are to be conducted by factory-trained engineers of the various equipment manufacturers and shall be done in two stages: one for the operations people and the second for maintenance personnel. A representative of the FSEC must be in attendance at all demonstrations.

C. The FSEC shall provide the District with one copy of a video film in DVD format depicting the operations and maintenance on each piece of new foodservice equipment.

D. The FSEC shall provide all necessary instructional training for all emergency equipment, gas turn-offs, fire extinguishers, high-temperature alarm system, etc., including, if any, emergency generating equipment.

E. The FSEC shall provide all necessary instructional training for all safety equipment.

3.5 CLOSEOUT PROCEDURES

A. Start-up of Foodservice Equipment
   1. Utilities (lighting of pilot lights, etc.) by General Contractor
   2. FSEC shall provide for Manufacturer's Service Agent to ensure systems are properly connected and are operational per manufacturer's required specification.
   3. FSEC shall provide for Manufacturer's Representative to demonstrate how to properly operate all new foodservice equipment.
   4. FSEC shall provide manufacturer inspection certification for all new items for District's acceptance, otherwise will consider not meeting the project specifications.

B. Provide services of the Contractor's technical representative and the Manufacturer's technical representative (where required) to instruct District personnel in the operation and maintenance of new foodservice equipment
   1. Schedule training with the District.
   2. Provide at least 7-day notice of training date to the District.

C. O&M Manuals: Provide a compact disk with electronic version of all Operation & Maintenance Manuals for new foodservice equipment.

D. The Contractor shall provide a walk-through with the District prior to turning the project over to the District for operation.

E. FSEC to provide a complete list of all authorized service providers, names and contact information, including phone numbers and email, for all food service equipment in the contract

3.6 EQUIPMENT SCHEDULE

A. All dimensions are for reference only. Dimensions and site conditions must be field verified.

B. All equipment shall comply with applicable Nevada State Seismic requirements.

C. Foodservice Equipment drawings are part of these specifications.

D. Warranties: Five-year Compressor Warranty. Two-year Parts & Labor Warranty for all new equipment.

E. All roll-in or roll-thru cabinets shall be trim to the wall with 6”H 16ga S/S cove base, 3/8” radius.

F. All plumbing, electrical and gas lines shall be concealed within the building structure to the greatest extent possible. Exposed wiring to be enclosed in S/S casing.

G. It shall be the responsibility of the FSEC to provide S/S covers for all exposed conduit, piping and refrigeration lines in the kitchen spaces.

H. Outdoor Mounting: Provide weather-tight housing and low ambient controls for units mounted outdoors.

I. Where indicated, or required for safety of equipment operator, anchor equipment to floor or wall. Provide legs with adjustable flanged foot where equipment is indicated to be anchored to floor. Install two (2) anchors on each foot and cap off with S/S acorn nuts.

J. All gas appliances shall have gas hose with quick disconnect and seismic restraint (seismic restraints where applicable).

K. All gas appliances with open burners installed in schools shall have Battery spark ignition

L. All mobile units with water lines shall have water hose with quick disconnect and seismic restraint (seismic restraints where applicable).

M. NSF Standards: Comply with applicable National Sanitation Foundation (NSF) standards and recommended criteria including NSF 2 and NSF 7. Provide each principal item of Foodservice Equipment with a NSF Seal of Approval.

N. All Walk-In penetrations to be sealed and insulated with foamed insulation.

O. Where screws are exposed, Stainless Steel Pan Head Screws are to be used. No round head screws to be utilized.

ITEM # 1 AIR COOLED ROOF MTD. REFRIGERATION RACK

Quantity: One (1)

Manufacturer: Coldzone

Model: MPL-2

SIS No.: D709

1. One (1) Model MPL-2 Furnish and install Mini Pak Refrigeration System per Plan, Details and Specifications FSEC to verify size of Suction and Liquid Line required.
2. MINI-PAK REFRIGERATION SYSTEM
   a. The outdoor air-cooled, refrigeration system is to be U.L. Listed and will be located on the roof of the building. This unit includes the outdoor painted weather housing, compressors, copper core aluminum finned condenser, electrical control panel, all housed within a single assembly and the evaporator coil assemblies, all with the required options and accessories. All of the component parts, options and accessories will be provided, mounted, piped and wired, as required by the manufacturer.

b. The outdoor weather housing shall include a welded, de-burred and cleaned structural steel frame made of 12 gauge. The exterior housing and access doors will be manufactured of a minimum of 16 gauge galvanized steel which has been assembled and cleaned. The frame and shall be painted with a primer coat of epoxy based paint and finished with a coat of polyurethane acrylic enamel.
c. All of the component parts, options and accessories will be provided, mounted, piped and wired, as required by the manufacturer. The system shall be manufactured to operate at: 208-230 volts, 3 phase, 60 hertz.

3. COMPRESSOR AND CONDENSER SYSTEMS
   a. All compressors will be Copeland hermetic, scroll, digital scroll, Copelematic or discus. All compressors will be manufactured to operate with R-448A refrigerant. Each Compressor system shall be filled with refrigerant compatible oil and will include discharge and suction line vibration protection for Copelametic and Discus compressors, dual pressure control with stainless steel braided piping, liquid line filter-dryer, moisture indicating sight glass, flooded head pressure control valve and crankcase heater.
   b. Each of these systems shall also include a receiver tank capable of accepting the entire systems refrigerant charge without exceeding 90% of its volumetric capacity. Each receiver will be provided with a pressure relief vent and, at its inlet and outlet and an isolation valve with a service port. Additionally, all compressor systems that will operate at suction temperatures below 0°F shall include a suction line accumulator.
   c. The condenser system shall include the Multi-Circuited condenser rated for 95 F ambient, 12 fins per inch, ECM condenser fan motors with 24 inch fan blades mounted in a venturi contoured air-scoop protected by plastic coated fan guards, and flooded head pressure controls. The compressors and condenser circuits shall be sized to operate at an average temperature differential between the ambient and condensing temperatures of 20°F.
4. CONTROL PANEL
   a. The control panel shall be protected include circuit breakers, start capacitors, and fan cycle control thermostats for each of the condenser fan motors. A fused disconnect will be located on the rack system. A wiring diagram of the refrigeration system shall be provided and mounted inside of the refrigerated system. All internal wiring shall be shown on the wiring diagram.
5. EVAPORATOR COILS WITH EcoNet INTELLIGENT CONTROL
   a. Evaporator coils shall be direct expansion type fabricated of copper tubes with aluminum fins.
   b. All evaporator coils shall be provided with solenoid valve, electronic thermostatic expansion valve, thermostat for medium temp evaporators (thermostat for low-temp evaporators is part of the demand defrost system), and suction "P" trap piped and wired to the junction box for positive pump-down. Evaporators come standard in a dual voltage configuration, include ECM type fan motors that will operate at the dual speeds of 1,550 rpm max and 900 rpm min, and are designed to function with new “wide glide” refrigerants.
   c. EcoNet® Enabled Unit Coolers are electronically controlled evaporators designed for energy efficiency and easier installation. EcoNet Enabled Unit Coolers save energy in refrigeration systems through precise superheat and space temperature control, fan cycling, and controlling how often the system goes into defrost based on compressor runtime. It eliminates unnecessary defrosts, maximizes energy efficiency with less compressor runtime, reduces liability by eliminating icing issues, reduces fan speed to

50% during off cycle to save energy, and reduces temperature fluctuations by regulating defrosts for improved product quality.

d. No inter-wiring is required between the Mini-Pak and low-temp evaporator coils with EcoNet.

6. GENERAL NOTES
   a. GENERAL CONTRACTOR
      1) Contractors shall verify all dimensions and coordinate with other trades.
      2) General contractor shall prepare the platform, curbed openings and weatherproofing the same after installation.
   b. REFRIGERATION CONTRACTOR
      1) The complete system shall be evacuated with vacuum pump.
      2) Charge, test and adjust each unit to assure proper operation.
      3) All copper tubing to be refrigerant grade ACR. or type "l".
      4) Silver solder and/or sil-fos shall be used for all refrigerant piping. Soft solder is not acceptable.
      5) All piping to be pressure tested with nitrogen at 3oo psi. After the condensing unit and coil have been connected, the balance of the system shall be leak tested with all valves open.
      6) Refrigeration contractor to provide and install drain line heater in freezer to be connected by electrical contractor.
   c. ELECTRICAL CONTRACTOR
      1) Electrical contractor to connect drain line heater in freezer.
      2) Electrical contractor to provide power for refrigeration package and evaporator coils.
      3) All electrical wiring and installation shall be in accordance with the wiring diagram and local codes.
   d. PLUMBING CONTRACTOR
      1) Plumbing contractor to provide ACR or type "l" copper drain lines for walk-in refrigeration and freezer, pitched 1/2" per foot of run. In freezer, unheated drain line must be outside of insulation to prevent freezing. Trap drain line outside of refrigerated space to avoid entrance of warm and moist air.
      2) Plumbing contractor to provide individual drain line for each evaporator unless otherwise called for.
      3) All plumbing installation shall be in accordance with local codes.
      4) One (1) Model ECONET To include EcoNet Smart Temperature Control Command Center.
      5) The HTPG Eco Net Command Control Center is an intelligent device that provides remote local monitoring and control over HTPG EcoNEt enabled evaporators in cooler or freezer applications. It's designed to be simple to operation with an inututivbe touchscreen interface for seamless control of both groups and standalone systems

ITEM # 2 FLOOR MTD. MOP SINK W/FAUCET - PROVIDED BY THE PLUMBING CONTRACTOR

Quantity: One (1)

Manufacturer: IMC/Teddy

Model: FS-L

SIS No.: D709

1. One (1) Model FS-L Service Utility Sink per Plumbing Engineer's specifications.
2. One (1) Model SSF Wall Faucet
3. Note: MFR, MODEL AND CUTSHEET ARE FOR REFERENCE ONLY.

ITEM # 3 WALL-MTD SHELF

Quantity: One (1)

Manufacturer: Custom S/S

Model: WALL SHELF

SIS No.: D709

1. One (1) Model WALL SHELF Furnish and install Wall Shelf per Plan, Details and General Specifications on Part 2 to Part 3 herein, including: 16ga #304 S/S with 1-1/2" sanitary downward rolled rim on front and 2" turn up edge where adjacent to wall. Mount 60" AFF. 14ga #304 S/S wall brackets, tac weld to the underside of the shelf.

ITEM # 4 WALL MTD. MOP HOLDER

Quantity: One (1)

Manufacturer: IMC/Teddy

Model: MH3

SIS No.: D709

1. One (1) Model MH3 Mop/Broom Holder, 3-position, stainless steel

ITEM # 5 SPARE NO.

ITEM # 6 42" WALL MTD. AIR CURTAIN

Quantity: Two (2)

Manufacturer: Berner

Model: SHD07-1042A

SIS No.: D709

1. Two (2) Model SHD07-1042A Sanitation Certified Series High Performance Air Curtain, 42" long, unheated, (1) 3/4 hp motor, for doors up to 7-feet high, specify exterior, indoor or exterior mounting, cULus, UL EPH Classified, MADE IN USA
2. Two (2) If special freight fees are requested, (See below) all applicable fees will be added to the invoice; fees subject to change; contact factory for addition information.
3. Two (2) Model A 120v/60/1-ph
4. Two (2) Model 9503SD020-P Automatic Door Switch, plunger type, activates air door when door opens, single phase only & max. amp draw of 20 amps, 120-240V
5. Two (2) White powder coat exterior finish standard
6. Two (2) Model 66ADS000DMB Mounting Bracket, for plunger door switch used with manual swing doors (field mounted)

ITEM # 7 CURB MTD. EMPLOYEE LOCKERS

Quantity: One (1)

Manufacturer: Penco Lockers

Model: 6231R

SIS No.: D709

1. One (1) Model 6231R (LOT) Vanguard, Classic III Recessed Handle, 2-tier lockers 12"L x 12"W x 36"H per opening. Size per plan x 72"H, mount on galvanized curb. Manufacturer's standard model with Slope Top, Padlock attachment (padlocks not included).
2. ACCESSORIES: (1) ADA-compliant locker - assign bottom center section and provide appropriate symbol sign on the door.
3. NOTE: Latch and locking hardware shall not require tight grasping, tight pinching, or twisting of the wrist to operate. Provide shelf and pole at 48" max AFF and lower shelf at 15" min AFF (Reach requirements). Provide 5% of total lockers or one minimum accessible locker per IBC Section 11B-811.
4. Powder coat baked enamel finish - Color selection by the A.

ITEM # 8 500 LB ICE MAKER W/ BIN - REMOTE

Quantity: One (1)

Manufacturer: Manitowoc

Model: IDF0500N

SIS No.: D709

1. One (1) Model IDF0500N Indigo NXT™ Series Ice Maker, cube-style, air-cooled, designed for remote refrigeration (vertical condenser and lines sold separately), 30"W x 24"D x 21-1/2"H, production capacity up to 510 lb./24 hours at 70°/50° (445 lb. AHRI certified at 90°/70°), easyTouch display with 13 different language options, date/time stamp display, automatic reminder/alert icon, one touch asset information, automatic detection of accessories, continuous operating status, programmable production options (time, weight, day or night), one touch cleaning with displayed instructions, Alpha-San anti-microbial protection, acoustical ice sensing probe, self-diagnostic technology, DuraTech™ exterior, dice size cubes, R404a refrigerant, NSF, cULus, CE
2. One (1) (-161A) 115v/60/1ph, 13.7 amps
3. One (1) NOTE: Tubing required for installation, must select length required
4. One (1) Model D400 Ice Bin, 30"W x 34"D x 38"H, with side-hinged front-opening door, side grips, 365 lbs. application capacity, AHRI certified 12.3 cu. ft., for top-mounted ice maker, Duratech exterior, NSF
5. One (1) Model K00463 Ice Scoop, 85 oz (5.3 lbs.) capacity, thumb & knuckle guard, rubber handle, internal or external bin mounting (compatible with D Bins), cast aluminum, NSF
6. One (1) Model K00461 External Scoop Holder, wall or bin mount, metal frame with plastic shield, NSF
7. One (1) Legs, 6" adjustable stainless steel, standard

ITEM # 9 REMOTE CONDENSER UNIT- FOR ITEM #8

Quantity: One (1)

Manufacturer: Manitowoc

Model: JCF0500-161

SIS No.: D709

1. One (1) Model JCF0500-161 Remote Condensing Unit, Vertical Discharge, air-cooled, for salt spray environments specify coated coils, IF-0500N series, AHRI, cULus, CE
2. One (1) (-161) 115v/60/1-ph, 1.82 amps, standard
3. One (1) Model RT50R404 Remote Tubing Kit, 50 ft. tubing length (pre-charged), for 500, 600, 850, 1000 series
4. One (1) Model K00129 Remote Coupling Kit

ITEM # 10 WATER FILTRATION SYSTEM FOR ICE MACHINES

Quantity: One (1)

Manufacturer: Manitowoc

Model: AR-10000-P

SIS No.: D709

1. One (1) Model AR-10000-P Arctic Pure® Plus Primary Water Filter Assembly, includes head, shroud, hardware, mounting assembly, & (1) filter cartridge, 15,000 gallon capacity, 0-600 lbs./ice per day

ITEM # 11 FLOOR TROUGH WITH GRATE

Quantity: One (1)

Manufacturer: Custom

Model: FLOOR TROUGH

SIS No.: D709

1. One (1) Model FLOOR TROUGH Custom Floor Trough, Size per Plan x 6" deep, S/S subway grate & removable basket, with center drain, NSF
2. One (1) 14-ga brushed finish type 304 S/S, completely welded and coved. All welds to be ground and polished smooth.
3. Trough to have built-in pitch towards wastes for complete drainage and anchor straps for securing. To be fitted with special S/S waste cup with removable perforated S/S basket to accommodate up to 3" waste pipes. Center drain.
4. One (1) 3/16" x 1" S/S Subway Grate. S/S bar stock, set in vertical position with open front and back for ease of draining, connected by (2) 1/2" S/S rods, inset 3" from each end, heli-arc welded to each bar with 13/16" clearance between each bar. Each grating section shall be 20"L max.

ITEM # 12 SPARE NO.

ITEM # 13 CORNER GUARDS & END CAPS

Quantity: One (1)

Manufacturer: Custom S/S

SIS No.: D709

1. One (1) Furnish and install Corner Guards & End Caps per Plan, Details and General Specifications on Part 2 to Part 3 herein, including: 14ga S/S angle construction.

2. One (1) (LOT) CORNER GUARDS 2" x 2" angle x full height to ceiling. Provide for all exposed corners; mount bottom flush with top of coved base.
3. One (1) (LOT) END CAPS 2" x 2" angle x full wall height, similar to Corner Guards but shall extend to cover the full exposed face of the wall.

ITEM # 14 MOBILE 5-TIER DRY STORAGE SHELVING

Quantity: Nine (9)

Manufacturer: Metro

Model: NC

SIS No.: D709

1. Nine (9) Model NC Super Adjustable Super Erecta® Shelf, wire, sizes per plan, chrome plated finish, plastic split sleeves are included in each carton, corner release system, NSF
2. SIZES PER PLAN x 74"H. Each unit to have (4) 74UP Posts, (2) 5MP swivel casters, (2) 5MPB casters with brake
3. Provide all necessary components for complete installation.

ITEM # 15 WALK IN FREEZER W/ TRIM

Quantity: One (1)

Manufacturer: Thermalrite Refrigeration

Model: WIF

SIS No.: D709

1. One (1) Model WIF Furnish and Install Thermalrite Walk In Freezer with Trim size per Plan x 8'11" High O.D. A.F.F. UL-listed, NSF No. 7 approved prefabricated modular construction to hold -10 degrees F.
2. Panel insulation: 4” DURATHANE, high density all-urethane foamed-in-place (Class 1). Provide necessary labor, equipment and tools for complete installation to conform with drawings and written specifications including:
3. Entire assembly to be provided as floorless with flat bottom wall panels installed in a 9” building floor depression and held in place with wall anchors. Walls to be installed with (9" floor depression with 6" insulation). (3) layers of 2” urethane slab insulation with 10 mil polyethylene sheeting vapor barrier to be installed by FSEC. 15# tar paper to be provided (supplied by FSEC).
4. Wearing floor by GC (install after assembly of walk-in box): Poured Epoxy by General Contractor. Provide 6” high continuously coved base with NSF 3/8” radius for the interior of the walk-in freezer
5. Metal Finishes: Interior walls & exposed exterior shall be 20 GA. White Smooth Galvanized.; Unexposed exterior to be 26 Ga. Stucco Embossed Galvanized Steel. Exposed exterior walls to the interior of the building to be 20 GA Stainless.
6. Exposed exterior to the Kitchen to be provided with 48” high AFF 14 Ga. S/S wainscot. Wainscot shall be mounted with adhesive and sealed with silicone. No external fasteners such as screws or pop rivets shall be applied as fastening for the wainscot.
7. (1) 36” x 80” High 20 Ga. S/S flush mounted entrance door with hardware – NSF Listed. An armored anti-sweat heater cable shall be run in a breaker strip located behind a removable

heavy gauge stainless steel trim for easy access to heater cable. Heater cable shall be run under threshold

8. One (1) Kason Model K27C K27C handle with Mortise deadbolt latch & inside Safety Release.
9. Three (3) Kason Model K1248 Doors provided with (3) spring-loaded hinges.
10. One (1) Kason Model K1094 Hydraulic rack and pinion door closer.
11. One (1) Kason Model 1806 LED light fixture w/ bulb, mounted at door
12. 48” High AFF 14 Ga. Stainless Steel interior & exterior kickplates.
13. 14"x24" heated peep window with heated frame, 43" max mounting height
14. Vinyl strip curtains provided at doors, 8"W x .080" thick of overlapping strips, heavy-duty transparent PVC material.
15. One (1) Model AL-TP45WYYK4FT (LOT) 48” LED 45 Watt Vapor Tight light fixtures with bulbs. Quantities per plans. Wire thru door monitor/switch by EC.
16. Seismic support package to be provided as detailed on provided plans
17. Trim matching the walk-in finish and fabricated to fit building conditions shall be supplied to close all joints between walk-in and building walls. Enclosure panels matching the walk-in finish shall be supplied to close off space between top of walk-in and building ceiling.
18. Exposed exterior to be provided with 42” high AFF 14 Ga. stainless steel wainscot. Wainscot shall be mounted with adhesive and sealed with silicone. No external fasteners such as screws or pop rivets shall be applied as fastening for the wainscot. Provide 14GA corner guards at corners.
19. One (1) Modularm Model 75LC Walk-in shall be equipped with Modularm 75LC hi/low temperature alarm with light manager. The alarm will activate when temperature rises or falls above/below desired settings. Alarm to also have door open alarm and auto-off light manager that shuts lights off if left on longer than 15 minutes. Alarm sensor is to be located in the return air stream of evaporator coil. Control panel shall be located at front of walk-in or at other pre-specified location. Alarm will also be equipped with IP-1 panic switch and motion detector. EC to provide connection to District's monitoring control panel.
20. The walk-ins shall be supplied with a complete set of installation, operational and maintenance instructions to cover erection of the walk-in, installation operating procedures and routine maintenance schedule. It is the responsibility of the installation contractor to follow the complete instructions to ensure proper installation of the walk-in panels.
21. Walk-ins shall be set up at the manufacturer’s facility prior to shipment and a quality control inspection performed on the product. A digital photograph of the walk-ins set up must be included at the manufacturer’s facility shall be provided for the Food Equipment Contractor’s permanent records.
22. NOTE: Verify field dimensions and site conditions prior to fabrication.

ITEM # 16 EVAP. COIL/REFRIGERATION SYSTEM - PART OF REFRIGERATION RACK

Quantity: One (1)

Manufacturer: Coldzone

Model: CL6A117ADARE

SIS No.: D709

1. One (1) Model CL6A117ADARE Furnish and install WIF Evaporator Coil with Reverse Cycle Defrost per Plan, Details and Specifications on sheet FS.05.0. FSEC to verify size of Suction and Liquid Line required.

2. A drain line heater shall be provided for each evaporator coil located within a compartment with an operating temperature at or below +32 degree F

ITEM # 17 MOBILE STORAGE SHELVING UNIT (4-TIER)

Quantity: Nine (9)

Manufacturer: Metro

Model: NK3

SIS No.: D709

1. Nine (9) Model NK3 Super Adjustable Super Erecta® Shelf, wire, Size per Plan x 62-9/16"H. Each unit to contain (4) 63UPK3 posts, (2) 5PC & (2) 5PCB casters.

Provide all necessary components for complete installation.

ITEM # 18 SPARE NO.

ITEM # 19 SPARE NO.

ITEM # 20 WALK IN COOLER W/ TRIM

Quantity: One (1)

Manufacturer: Thermalrite Refrigeration

Model: WIC

SIS No.: D709

1. One (1) Model WIC Cooler size per Plan x 8'-11"H (O.D. height). UL-listed, NSF7-approved prefabricated Modular Thermal Barrier Panel Room to hold +36°F. Provide necessary labor, material, equipment and tools for complete installation to conform to drawings and specifications, including:
2. Panel insulation: 4” DURATHANE, high density all-urethane foamed-in-place (Class 1). Provide necessary labor, equipment and tools for complete installation to conform with drawings and written specifications including:
3. Entire assembly to be provided as floorless with flat bottom wall panels installed in a 9” building floor depression and held in place with wall anchors. Walls to be installed with (9" floor depression with 6" insulation). (3) layers of 2” urethane slab insulation with 10 mil polyethylene sheeting vapor barrier to be installed by FSEC. 15# tar paper to be provided (supplied by FSEC).
4. Wearing floor by GC (install after assembly of walk-in box): Poured Epoxy by General Contractor. Provide 6” high continuously coved base with NSF 3/8” radius for the interior of the walk-in freezer
5. Metal Finishes: Interior walls & exposed exterior shall be 20 GA. White Smooth Galvanized.; Unexposed exterior to be 26 Ga. Stucco Embossed Galvanized Steel. Exposed exterior walls to the interior of the building to be 20 GA Stainless.
6. Exposed exterior to the Kitchen to be provided with 48” high AFF 14 Ga. S/S wainscot. Wainscot shall be mounted with adhesive and sealed with silicone. No external fasteners such as screws or pop rivets shall be applied as fastening for the wainscot.
7. (1) 36” x 80” High 20 Ga. S/S flush mounted entrance door with hardware – NSF Listed. An armored anti-sweat heater cable shall be run in a breaker strip located behind a removable

heavy gauge stainless steel trim for easy access to heater cable. Heater cable shall be run under threshold

8. One (1) Kason Model K27C K27C handle with Mortise deadbolt latch & inside Safety Release.
9. Three (3) Kason Model K1248 Doors provided with (3) spring-loaded hinges.
10. One (1) Kason Model K1094 Hydraulic rack and pinion door closer.
11. One (1) Kason Model 1806 LED light fixture w/ bulb, mounted at door
12. 48” High AFF 14 Ga. Stainless Steel interior & exterior kickplates.
13. 14"x24" heated peep window with heated frame, 43" max mounting height
14. Vinyl strip curtains provided at doors, 8"W x .080" thick of overlapping strips, heavy-duty transparent PVC material.
15. One (1) Model AL-TP45WYYK4FT (LOT) 48” LED 45 Watt Vapor Tight light fixtures with bulbs. Quantities per plans. Wire thru door monitor/switch by EC.
16. Seismic support package to be provided as detailed on provided plans
17. Trim matching the walk-in finish and fabricated to fit building conditions shall be supplied to close all joints between walk-in and building walls. Enclosure panels matching the walk-in finish shall be supplied to close off space between top of walk-in and building ceiling.
18. Exposed exterior to be provided with 42” high AFF 14 Ga. stainless steel wainscot. Wainscot shall be mounted with adhesive and sealed with silicone. No external fasteners such as screws or pop rivets shall be applied as fastening for the wainscot. Provide 14GA corner guards at corners.
19. One (1) Modularm Model 75LC Walk-in shall be equipped with Modularm 75LC hi/low temperature alarm with light manager. The alarm will activate when temperature rises or falls above/below desired settings. Alarm to also have door open alarm and auto-off light manager that shuts lights off if left on longer than 15 minutes. Alarm sensor is to be located in the return air stream of evaporator coil. Control panel shall be located at front of walk-in or at other pre-specified location. Alarm will also be equipped with IP-1 panic switch and motion detector. EC to provide connection to District's monitoring control panel.
20. The walk-ins shall be supplied with a complete set of installation, operational and maintenance instructions to cover erection of the walk-in, installation operating procedures and routine maintenance schedule. It is the responsibility of the installation contractor to follow the complete instructions to ensure proper installation of the walk-in panels.
21. Walk-ins shall be set up at the manufacturer’s facility prior to shipment and a quality control inspection performed on the product. A digital photograph of the walk-ins set up must be included at the manufacturer’s facility shall be provided for the Food Equipment Contractor’s permanent records.
22. NOTE: Verify field dimensions and site conditions prior to fabrication.

ITEM # 21 EVAP. COIL- REFRIGERATION SYSTEM-PART OF REFRIGERATION RACK

Quantity: One (1)

Manufacturer: Coldzone

Model: CL6E105DDARE

SIS No.: D709

1. One (1) Model CL6E105DDARE Furnish and Install WIC Evaporator Coil per Plan, Details and Specifications on sheet FS.05.0
2. FSEC to verify size of Suction and Liquid Line required.

3. A drain line heater shall be provided for each evaporator coil located within a compartment with an operating temperature at or below +32 degree F

ITEM # 22 MOBILE STORAGE SHELVING UNIT (4-TIER)

Quantity: Nine (9)

Manufacturer: Metro

Model: NK3

SIS No.: D709

1. Nine (9) Model NK3 Super Adjustable Super Erecta® Shelf, wire, Size per Plan x 62-9/16"H. Each unit to contain (4) 63UPK3 posts, (2) 5PC & (2) 5PCB casters.

Provide all necessary components for complete installation.

ITEM # 23 SPARE NO.

ITEM # 24 4-TIER MOBILE DRYING RACK W/ DRIP TRAY

Quantity: Two (2)

Manufacturer: Metro

Model: PR48VX3-XDR

SIS No.: D709

1. Two (2) Model PR48VX3-XDR MetroMax® i Mobile Drying Rack Unit with Drip Tray, 48"W x 24"D x 68"H, 4-tier, for bulk drying & trays/cutting boards/sheet pans, includes: (3) open shelf frames, (1) shelf, (4) 63" mobile posts, (2) drop-ins, (1) cutting board/tray drying rack, (1) adjustable drip tray, (4) polymer swivel casters (2 with brakes), built in Microban® antimicrobial product protection, NSF

ITEM # 25 POTWASH ASSEMLY

Quantity: One (1)

Manufacturer: Custom S/S

Model: CUSTOM

SIS No.: D709

1. One (1) Model CUSTOM Furnish and install Potwash assembly per Plan, Details and General Specifications on Part 2 to Part 3 herein, including: 14ga #304 S/S top with raised rolled edge. 10"H x 2" thick backsplash. 16ga #304 S/S tubular legs, 1-5/8" dia with 1" adjustable S/S bullet feet.
2. To include item #27 -3-Compartment Sink
3. INDIRECT WASTE

ITEM # 26 WALL-MTD SHELF

Quantity: One (1)

Manufacturer: Custom S/S

Model: WALL SHELF

SIS No.: D709

1. One (1) Model WALL SHELF Furnish and install Wall Shelf per Plan, Details and General Specifications on Part 2 to Part 3 herein, including: 16ga #304 S/S with 1-1/2" sanitary downward rolled rim on front and 2" turn up edge where adjacent to wall. Mount 60" AFF. 14ga #304 S/S wall brackets, tac weld to the underside of the shelf.

ITEM # 27 3-COMPARTMENT POT & PAN SINK-PART OF ITEM 25

Quantity: One (1)

Manufacturer: Custom S/S

Model: CUSTOM

SIS No.: 709

1. One (1) Model CUSTOM Furnish and install 3-Compartment Sink per plans, details and general specifications in parts 2 to 3 herein, including: 14ga #304 S/S, with coved interior corners, horizontal and vertical. Pitch to center drain. Provide drain and removable crumb cup. All welds to be ground smooth and polished. Able to accommodate 18" x 26" bun pans.
2. INDIRECT WASTE

ITEM # 28 TWIST WASTE W/OVERFLOW

Quantity: Three (3)

Manufacturer: T&S Brass

Model: B-3952-01

SIS No.: D709

1. Three (3) Model B-3952-01 Waste Valve, twist handle, 3-1/2" sink opening, 2" drain outlet with overflow assembly (replaces B-3917-01)

ITEM # 29 SPLASH-MTD FAUCETS

Quantity: Two (2)

Manufacturer: T&S Brass

Model: B-0290-04

SIS No.: D709

1. Two (2) Model B-0290-04 Big-Flo Mixing Faucet, wall mount, 8" adjustable centers, 12" swing nozzle with plain end outlet, 4" wrist handles with color coded indexes, low-lead, 3/4" female NPT, ANSI, NSF, ADA Compliant

ITEM # 30 DISHWASHER, UNDERCOUNTER

Quantity: One (1)

Manufacturer: Champion

Model: UL-130

SIS No.: D709

1. One (1) Model UL-130 Dishwasher, undercounter, 24"W x 25"D x 33-3/4"H, low temperature chemical sanitizing, (21) racks/hour capacity, top mounted controls, air glide door with safely switch, upper & lower interchangeable wash/rinse spray arms, pumped drain operation, built-in detergent/rinse-air/sanitizer dispensing pumps, fill & dump operation, electric tank heater with low-water protection, stainless steel top & side panels, 1 HP wash pump motor, includes: (1) peg rack & (1) flat rack, voltage 115v/60/1ph, UL, cETLus, NSF
2. One (1) Fuel Surcharge (NET/NET)
3. One (1) Champion ION scale prevention system, shipped un-mounted
4. One (1) Model 101273 Flat Bottom Dishrack, 20" x 20", additional
5. One (1) Model 101285 Peg Dishrack, 20" x 20", additional
6. One (1) Model ROLLER KIT Roller Kit, 1", set of (4) casters

ITEM # 31 DISPOSER W/ 18" CONE & MANUAL SWITCH

Quantity: One (1)

Manufacturer: InSinkErator

Model: SS-200-18A-MS

SIS No.: D709

1. One (1) Model SS-200-18A-MS SS-200™ Complete Disposer Package, with 18" diameter bowl, 6-5/8" diameter inlet, with removable splash baffle & reversible bowl cover, 2 HP motor, stainless steel construction, includes syphon breaker, solenoid valve, flow control valve, manual switch, single direction, adjustable leg kit
2. One (1) Short disposer body height, 1" shorter than standard
3. One (1) 208v/60/1-ph, 7.7 amps
4. One (1) Model SYPHON STD Syphon breaker standard, 1/2" (11477)
5. One (1) Model DEJAMWRENCH Dejamming wrench, fits 6-5/8" opening only (Not for use with throat guard) (13993)

ITEM # 32 HOSE REEL W/ WALL MTD. CONTROL CABINET, DUAL CHECK VALVES & VACUUM BREAKER

Quantity: One (1)

Manufacturer: T&S Brass

Model: B-2339-7122C01J

SIS No.: D709

1. One (1) Model B-2339-7122C01J Hose Reel Assembly, enclosed,3/8" x 30' hose (rated to 300 PSI), flush mount stainless steel rinse control cabinet, adjustable hose bumper, loose key mixing valve with compression spindles, dual check valves, shut-off valve, 1.07 GPM spray valve with swivel, thermometer, water hammer arrestor, includes multi-fit bracket, 1/2" NPT female inlets
2. One (1) Model B-0963 Vacuum Breaker, 1/2" NPT inlet & outlet, continuous pressure, quarter-turn ball valves

ITEM # 33 HAND SINK W/FAUCET, SOAP & TOWEL DISPENSERS & SIDE SPLASHES

Quantity: One (1)

Manufacturer: Advance Tabco

Model: 7-PS-80

SIS No.: D709

1. One (1) Model 7-PS-80 Hand Sink, wall mounted, 14" wide x 10" front-to-back x 5" deep bowl, 20 gauge 304 stainless steel, splash mounted faucet, lever drain with overflow, P-trap, soap & towel dispenser, wall bracket, NSF, cCSAus
2. One (1) Model 7-PS-15 Welded Side Splash, 12"H (installed height), both sides, for hand sinks with 14" wide x 10" front-to-back bowl, splash mounted faucets

ITEM # 34 SPARE NO.

ITEM # 35 2-SECTION ROLL-IN REFRIGERATOR

Quantity: One (1)

Manufacturer: Traulsen

Model: RRI232LUT-FHS

SIS No.: D709

1. One (1) Model RRI232LUT-FHS Spec-Line Refrigerator, Roll-in, two-section, self-contained refrigeration, StayClear™ Condenser, stainless steel exterior and interior, standard depth cabinet, full-height doors, accepts 66" high racks (by others) with microprocessor controls, 1/2 HP, cULus, NSF
2. One (1) 115v/60/1-ph, 11.4 amps, NEMA 5-15P, standard
3. One (1) Standard refrigerant, standard
4. One (1) Left door hinged left/right hinged right, standard
5. One (1) Locking hasps, padlock supplied by others, per each
6. F.S.E.C. to provide and install 16 GA 6"H S/S coved base, 3/8" radius.

ITEM # 36 UNIVERSAL PAN RACK

Quantity: Two (2)

Manufacturer: FWE / Food Warming Equipment Co., Inc.

Model: OTR-UA-12

SIS No.: D709

1. Two (2) Model OTR-UA-12 Universal Tray-Pan Rack, mobile, 65"H, open sides, capacity (12) 18" x 26" or (24) 12" x 20" or (12) oval trays-pans, adjustable 1-1/2" OC, welded aluminum construction, 5" casters (2 swivel)

ITEM # 37 MOBILE HEATED WARMING CABINET

Quantity: One (1)

Manufacturer: Cres Cor

Model: H137UA12D

SIS No.: D709

1. One (1) Model H137UA12D Cabinet, Mobile Heated, insulated, top-mount heater assembly, recessed push/pull handles, (12) sets of chrome plated wire universal angle slides aon 4-1/2" centers adjustable 1-1/2" centers, solid state electronic control, LED digital display, field reversible dutch doors, (4) heavy duty 5" swivel casters (2) braked, anti-microbial latches, aluminum exterior & interior, NSF, cCSAus
2. One (1) 120v/60/1-ph, 1.5 kW, 12.0 amp, 10 ft power cord, NEMA 5-15P, standard
3. One (1) Right-hand door swing (top & bottom doors), standard
4. One (1) Cord Wrap for insulated cabinet, standard
5. One (1) Model 1405 159 Perimeter Bumper, add 2" to OA dimensions, non-marking, gray
6. One (1) Model 1087 000 Push Handle
7. One (1) 6" polyurethane casters, set of 4

ITEM # 38 MOBILE HEATED CABINET

Quantity: One (1)

Manufacturer: Cres Cor

Model: H1381834D

SIS No.: D709

1. One (1) Model H1381834D Cabinet, Mobile Heated, insulated, top-mount heater assembly, recessed push/pull handle, channel pan slides hold (32) 18" x 26" pans on 1-1/2" centers, anti-microbial latches, dutch doors, aluminum exterior & interior, (4) heavy duty 5" swivel casters (2) braked
2. One (1) 120v/60/1-ph, 1.5 kW, 12.0 amp, 10 ft power cord, NEMA 5-15P, standard
3. One (1) Right-hand door swing (top & bottom doors), standard
4. One (1) Model 1405 159 Perimeter Bumper, add 2" to OA dimensions, non-marking, gray
5. One (1) Model 1087 101 Rear Push Handle
6. One (1) 6" polyurethane casters, set of 4

ITEM # 39 TYPE I EXHAUST HOOD

Quantity: One (1)

Manufacturer: Spring Air Systems

Model: FN-B-MB-15/5

SIS No.: D709

1. One (1) Model FN-B-MB-15/5 Furnish and install per plans, details and general specification in parts 2 to 3 herein, including:
2. The exhaust hood shall be a Spring Air Systems model no. FN-B-MB-15/5, box canopy, oven hood.
3. The unit casing shall be a minimum 18 GA. stainless steel on all exposed surfaces.
4. The hood shall have one exhaust duct collar and stainless steel flange.
5. The hood shall have LED lights evenly spaced along the length of the hood. All lights common to one section of the hood to be inter-wired by Spring Air Systems.
6. The DynaFlow fresh air plenum provides all the fresh air required for the commercial kitchen. The fresh air is routed to three (3) regions within the boundaries of the appliances. Each region includes an aerodynamically designed s/s perforated discharge panel.

7. The first (1) region discharges through a full length s/s panel located at the bottom of the DynaFlow plenum. Fresh air is directed through the Comfort Tuning Blade (CTB) towards the appliances providing maximum exhaust air reduction. The second (2) Region discharges through a full length s/s angular panel located at the bottom front of the DynaFlow plenum. The fresh air is directed towards the chef to provide a more comfortable work environment in front of the hood. The third (3) region provides horizontal discharge of fresh air through a s/s perforated panel out the front of the hood into the kitchen. The third region provides the exact amount of fresh air to balance the kitchen and ensure optimum capture.
8. The s/s front makeup air plenum shall include multiple MB FRONT s/s perforated panels every 33” (838mm) to 41” (1040mm) across the hood. The MB FRONT grills shall include a manually operated Adjustable Blade damper for individual adjustment over each appliance. The CTB damper is easily adjusted by the chef at the lower discharge to provide local adjustment of airflow to the chef by the chef. The hood shall have 3 LED lights evenly spaced along the length of the hood. All lights common to one section of the hood to be inter-wired by Spring Air Systems.
9. HOOD ENGINEERING DATA
    a. Model Number: FN-B-MB-15/5
    b. Hood Length: 180"
    c. Hood Width: 65.25"
    d. Left Overhang: 6"
    e. Right Overhang: 6"
    f. Service Chase: None
    g. Top Jacket(s): None
    h. Hood Weight: 825 lbs
    i. Hood Volume: 245 cubic feet
    j. Lights: 5
    k. Interconnect Lights: Yes
    l. Filter type: Cartridge
    m. Number of Filters: 6, 20"x25"
10. Exhaust Specifications
    a. Exhaust Volume/Duct: 2805 CFM
    b. No. of Duct Collars: 1
    c. Size of Duct Collar: 10" x 27"
    d. Static Pressure: 0.63" W.C.
    e. - Supply Specifications -
    f. Supply Volume: 1335 CFM Each
    g. No. of Supply Duct Collars: 2
    h. Size of Supply Duct Collar: 8" x 34"
    i. Supply Static Pressure: 0.2" W.C.
    j. Hood bottom to be at 7'-0" AFF.

ITEM # 40 EXHAUST SYSTEM - PROVIDED BY HVAC

Quantity: One (1)

Manufacturer: Custom

SIS No.: D709

1. One (1) Per Mechanical Engineer's specifications. EC to interconnect exhaust fan on roof with switch at hood, verify electrical requirements with HVAC.

ITEM # 41 MAKE-UP AIR SYSTEM - PROVIDED BY HVAC

Quantity: One (1)

Manufacturer: Custom

SIS No.: D709

1. One (1) Per Mechanical Engineer's specifications. EC to interconnect supply fan on roof with switch at hood, verify electrical requirement with HVAC.

ITEM # 42 FIRE SUPPRESSION SYSTEM (PIPING SYSTEM)

Quantity: One (1)

Manufacturer: Ansul Fire Protection

Model: R-102 ASEF-3T

SIS No.: D709

1. One (1) Model R-102 ASEF-3T Chemical Fire Protection System with Automan Regulated Release Assembly furnished and installed by hood manufacturer. Install in accordance with NFPA Bulletin 96, including all current amendments to protect hood and surface protection as required. All piping and conduit shall be run concealed in walls or above ceiling, except where exposure is necessary for functional reasons. Exposed piping shall be chrome plated. Include reset relay and manual remote pull station. System shall connect to electrical shut-off gas valve. All contactors are furnished by EC for shut down of electrical supply to all equipment in the event of system activation. System control cabinet shall be installed in location shown.
2. ELECTRICAL: 120V/1ph. Shunt trip breaker for power shut down of all appliances below the exhaust hood shall be provided as part of EC work. If required by the District, EC to provide connection to the District's monitoring control panel.
3. MECHANICAL: PC to install the electrical shut-off gas valve provided by FSEC.

ITEM # 43 FIRE SUPPRESSION SYSTEM CONTROL AUTOMAN - PART OF #42

Quantity: One (1)

Manufacturer: Ansul Fire Protection

SIS No.: D709

1. One (1) 120V/1ph

ITEM # 44 FIRE SUPPRESSION SYSTEM MANUAL PULL - PART OF #42

Quantity: One (1)

Manufacturer: Ansul Fire Protection

SIS No.: D709

1. One (1) Manual fire alarm boxes shall comply with CBC Section 907.4.2, 1117B.6 and 1118B.

ITEM # 45 18 GA S/S WALL FLASHING & HOOD TRIM

Quantity: One (1)

Manufacturer: Custom S/S

SIS No.: D709

1. One (1) Furnish and install Wall Flashing & Hood Trim per Plan, Details and General Specifications on Part 2 to Part 3 herein, including: Minimum 18ga #304 S/S construction. Sheets shall be set vertically with seams running perpendicular to the ceiling and floor. Seams and ends shall be capped with appropriate S/S T-molding or End molding. Attach to wall with approved mastic. Clad back wall and provide trim as required.

ITEM # 46 MOBILE DOUBLE CONVECTION OVEN

Quantity: One (1)

Manufacturer: Blodgett

Model: DFG-100 DBL

SIS No.: D709

1. One (1) Model DFG-100 DBL Convection Oven, gas, double-deck, standard depth, capacity (5) 18" x 26" pans per compartment, (SSD) solid state digital controls, 2-speed fans, interior light, simultaneous operated doors with glass, stainless steel front, sides & top, 6" stainless steel legs, flue connector, (2) 1/2 HP, 55,000 BTU each, cETL, NSF, CE
2. F.S.E.C. to provide and install 48" long Gas quick disconnects & seismic restraining device
3. One (1) Natural gas
4. Two (2) 115v/60/1-ph, 6.0 amps, 1/2 hp, 2-wire with ground, NEMA 5-15P (per deck), standard
5. One (1) Model SSD Top Oven: Solid State digital with Pulse Plus® and Cook & Hold, standard
6. One (1) Model SSD Bottom Oven: Solid State digital with Pulse Plus® and Cook & Hold, standard
7. One (1) 6" plate casters (set)
8. One (1) Gas manifold
9. One (1) F.S.E.C. to install 48" flexible gas hose with quick disconnect & restraining device

ITEM # 47 24" 4 OPEN BURNER RANGE

Quantity: One (1)

Manufacturer: Vulcan

Model: V4B24

SIS No.: D709

1. One (1) Model V4B24 V Series Heavy Duty Range, gas, 24", modular, (4) 35,000 BTU open burners, cast iron grates, manual controls, stainless steel front, front top ledge, sides, base, burner box & stub back, 4" flanged feet, 140,000 BTU, CSA, NSF
2. One (1) Natural gas (specify elevation if over 2,000 ft.)
3. One (1) Model PRESREG-NA11/4 1-1/4" NPT pressure regulator (Natural gas)
4. One (1) 1-1/4" rear gas connection, standard
5. One (1) Rear gas connection: cap & cover, both ends

6. One (1) Model VOVER-72ST Stub Riser, 4", overlapping, for 72" ranges

ITEM # 48 24" THERMOSTATIC GRIDDLE

Quantity: One (1)

Manufacturer: Vulcan

Model: VGT24

SIS No.: D709

1. One (1) Model VGT24 V Series Heavy Duty Range, gas, 24", modular, griddle, 3/4" thick polished steel plate, snap action thermostatic controls, stainless steel front, front top ledge, side, base, burner box & stub back, 4" flanged feet, 60,000 BTU, CSA Flame, CSA Star, NSF
2. One (1) Natural gas (specify elevation if over 2,000 ft.)
3. One (1) Model PRESREG-NA11/4 1-1/4" NPT pressure regulator (Natural gas)
4. One (1) 1-1/4" rear gas connection, standard
5. One (1) Rear gas connection: cap & cover, both ends

ITEM # 49 MOBILE 72" REFRIGERATED BASE

Quantity: One (1)

Manufacturer: Vulcan

Model: VSC72

SIS No.: D709

1. One (1) Model VSC72 Refrigerated Base, 72", self-contained, (4) drawers, flat top, stainless steel front & sides, electric condensate evaporator, casters, cULus, NSF
2. One (1) 115v/60/1-ph, 6.7 amps, NEMA 5-15P, standard
3. One (1) Compressor on left, standard
4. mount 47,48 and 50 on item 49. Unitized

ITEM # 50 24" CHARBROILER

Quantity: One (1)

Manufacturer: Vulcan

Model: VCBB24

SIS No.: D709

1. One (1) Model VCBB24 V Series Heavy Duty Range, gas, 24", modular, charbroiler, cast iron grates & char-radiants, stainless steel front, front top ledge, side, base, burner box & stub back, 4" flanged feet, 65,000 BTU, CSA, NSF
2. One (1) Gas type to be specified
3. One (1) 3/4" rear gas connection, standard
4. One (1) Rear gas connection: cap & cover, both ends

ITEM # 51 FULL SIZE COMBI OVEN WITH RACKS AND WATER FILTER

Quantity: One (1)

Manufacturer: RATIONAL

Model: ICP 20-FULL NG 208/240V 1 PH (LM100GG)

SIS No.: D709

1. One (1) Model ICP 20-FULL NG 208/240V 1 PH (LM100GG) (CG1GRRA.0000245) iCombi Pro® 20-Full Size Combi Oven, natural gas, (20) 18" x 26" sheet pan or (40) 12" x 20" steam pan or (20) 2/1 GN pan capacity, mobile oven rack & (10) stainless steel grids included, intelligent cooking system with (4) assistants; iDensityControl, iCookingSuite, iProductionManager, & iCareSystem, (6) operating modes, (5) cooking methods, (3) manual operating modes, 85° to 572°F temperature range, quick clean, care control, eco mode, 6-point core temperature probe, retractable hand shower, Ethernet interface, Wi-Fi enabled, 303,500 BTU, 208/240v/60/1-ph, 6 ft. cord, 2.2 kW, CE, IPX5, cCSAus, NSF, ENERGY STAR-®
2. One (1) NOTE: All discounts subject to approval by manufacturer
3. One (1) Model CAP Chef Assistance Program, a RATIONAL certified Chef conducts 4 hours/location specialized application training with personnel, no charge
4. One (1) Model 1900.1154US Water Filtration Single Cartridge System, for any iVario, single Combi model, or XS or half-size Combi-Duos, includes: (1) single head with pressure gauge, R95H filter & filter installation kit
5. One (1) Model 9999.2271 RCI RATIONAL Certified Installation, additional installation cost for a RATIONAL Water Filter System is available when purchased with Certified Installation of RATIONAL unit THIS ITEM IS NON-DISCOUNTABLE, USA ONLY (NET)
6. One (1) NOTE: The RATIONAL Water Filtration Systems helps provide consistent high quality water to your RATIONAL cooking systems. The patented carbon block technology reduces the effects of sediment, chloramines and chlorine while providing the required flow rates
7. One (1) Model 1900.1155US Water Filtration Cartridge, replacement or add on with additional Modular Head to Double Cartridge System, includes: (1) R95HF filter
8. One (1) Model 56.01.535 Active Green Cleaner Tabs, for all iCombi Pro/Classic, 150 pieces/bucket (minimum order quantity- 2 ea, unless ordered with a unit)
9. Three (3) Model 56.00.562 Care Tabs, bucket of 150 packets for all iCombi Pro/Classic models and SelfCooking Center® units from 10/2008, with CareControl - Serial SG, SH or SI series (minimum order quantity: 2pcs, unless ordered with a unit)
10. One (1) Model 60.76.318 External Core Temperature Probe, USB connection, 20-half and full size
11. One (1) Model 8700.0317 Floor Fixing Set (contains 2 pieces), for 201/202 and stands (one set comes with floor units. Two sets will be needed for base cabinets), may be used for seismic applications
12. One (1) Model 42.00.162 RATIONAL USB Data Memory Stick, for transferring of cooking programs and HACCP data between units & computers (NET)
13. One (1) Model 60.22.490 (Mobile Oven Rack, type 20-full size Pro/Classic, (20) 24" x 20" pan capacity, 2-1/2" spacing (Grid Shelves sold separately)
14. One (1) Model 60.22.392 Sheet Pan Adapter, top, for 20-full size mobile racks with (20) racks, allows use of full size sheet pans without stainless steel grid
15. One (1) Model 60.22.393 Sheet Pan Adapter, below, for 20-full size mobile racks with (20) racks, allows use of full size sheet pans without stainless steel grid

ITEM # 52 ACCESSIBLE HAND SINK W/ SOAP & TOWEL DISPENSER

Quantity: One (1)

Manufacturer: John Boos

Model: PBHS-ADA-P-STD

SIS No.: D709

1. One (1) Model PBHS-ADA-P-STD Pro-Bowl Hand Sink, wall mount, 14"W x 16" front-to-back x 5" deep bowl, (1) set of splash mount faucet holes with 4" centers, 1-7/8" drain, drain basket included, soap & towel dispenser, removable front panel, includes mounting bracket, stainless steel construction, ADA compliant, NSF, CSA-Sanitation (Goose neck faucet included)
2. One (1) Model PB-SMMK-90 Splash Mount Faucet Mounting Kit, includes (2) 1/2" supply nipples, (2) retainer nuts, (2) lock washers, (2) rubber washers and (2) male & female short 90° elbows
3. One (1) Model PB-PT1.5 P-Trap, 1-1/2" & tail pipe

ITEM # 53 SPARE NO.

ITEM # 54 SPARE NO.

ITEM # 55 PREP TABLE W/MARINE EDGE AND DRAWERS

Quantity: One (1)

Manufacturer: Custom S/S

SIS No.: D709

1. One (1) Furnish and install Prep Table per Plan, Details and General Specifications on Part 2 to Part 3 herein and to include: 14ga S/S top with marine edge. 8"H x 2" thick integral back and side splashes where adjacent to wall. 16ga S/S undershelves. 16ga #304 S/S tubular legs, 1-5/8" dia with 1" adjustable S/S bullet feet. All welds to be ground smooth and polished.
2. Two (2) Model CUSTOM Furnish and install Drawer Assembly per Plan, Details and General Specifications on Part 2 to Part 3 herein, including: Self-closing drawer with (4) 2" dia ball bearing rollers traveling on 16ga S/S slides. Support slide to have minimum load capacity of 150 lbs per pair. Provide 18ga S/S enclosure, cylinder lock, recessed full-length S/S handle, and removable 20ga #304 S/S drawer pan, with coved corners.
3. INDIRECT WASTE

ITEM # 56 WALL-MTD SHELF

Quantity: One (1)

Manufacturer: Custom S/S

Model: CUSTOM

SIS No.: D709

1. One (1) Model CUSTOM Furnish and install Wall Shelf per Plan, Details and General Specifications on Part 2 to Part 3 herein, including: 16ga #304 S/S with 1-1/2" sanitary downward rolled rim on front and 2" turn up edge where adjacent to wall. Mount 60" AFF. 14ga #304 S/S wall brackets, tac weld to the underside of the shelf.

ITEM # 57 PREP SINKS W/ S/S COVERS- PART OF ITEM #55

Quantity: One (1)

Manufacturer: Custom

Model: CUSTOM

SIS No.: D709

1. One (1) Model CUSTOM Part of item #78: 2-Compartment Sink: 14ga #304 S/S with coved interior corners, horizontal and vertical. Pitch to center drain. Provide drain and removable crumb cup.
2. Two (2) CSS Model CUSTOM Furnish and Install Sink Covers per Plan, Details and General Specifications on Part 2 to 3 hereing, including: 14ga S/S construction with grommet finger hole.
3. One (1) CSS Sink Cover Storage: Covers will store below in a storage slot above the lower shelf.

ITEM # 58 TWIST WASTE W/ OVERFLOW

Quantity: Two (2)

Manufacturer: T&S Brass

Model: B-3952-01

SIS No.: D709

1. Two (2) Model B-3952-01 Waste Valve, twist handle, 3-1/2" sink opening, 2" drain outlet with overflow assembly (replaces B-3917-01)

ITEM # 59 12" SPLASH MOUNT FAUCET W/ WRIST HANDLES

Quantity: One (1)

Manufacturer: T&S Brass

Model: B-0231

SIS No.: D709

1. One (1) Model B-0231 Sink Mixing Faucet, 12" swing nozzle, wall mounted, 8" centers on sink faucet with 1/2" IPS eccentric flanged female inlets
2. Two (2) Model B-WH4 Wrist Action Handle
3. One (1) Model B-0199-01 Aerator, non-splash, 55/64" -27 female aerator threads, fits goosenecks & nozzles
4. One (1) Model B-0230-K Installation Kit , (2) 1/2" NPT nipples, lock nuts and washers, (2) short "Ell" 1/2" NPT female x male

ITEM # 60 TRASH CANS W/DOLLY & LID

Quantity: Three (3)

Manufacturer: Rubbermaid Commercial Products

Model: FG262000GRAY

SIS No.: D709

1. Three (3) Model FG262000GRAY ProSave BRUTE Container, without lid, 20 gallon, 19-1/2"D x 22-7/8"H, round, reinforced rims, built in handles, double rimmed base, high-impact plastic construction, gray, NSF

2. Three (3) Model FG261960GRAY BRUTE Container Lid, 19-7/8"D x 1-1/4"H, gray
3. Three (3) Model FG264043BLA Quiet Dolly with Red Casters to distinguish from standard casters.
4. Reduces noise on uneven surfaces.
5. Perfect for schools, nursing homes, offices
6. 18 1/4" x 6 5/8"
7. Capacity 250 lb

ITEM # 61 MOBILE TABLE W/ DRAWER

Quantity: One (1)

Manufacturer: Custom S/S

Model: CUSTOM

SIS No.: D709

1. One (1) Model CUSTOM Furnish and install Mobile Table per Plan, Details and General Specifications on Part 2 to Part 3 herein, including: 14ga S/S top with integral 2" sanitary rolled edges and eased corners. 16ga S/S undershelves. (4) 16ga #304 S/S cross bracing and tubular legs, 1-5/8" dia with S/S gussets. (4) Swivel casters with brake. All welds to be ground smooth and polished.

One (1) Self-closing drawer with (4) 2" dia ball bearing rollers traveling on 16ga S/S slides, 18ga S/S enclosure, cylinder lock, recessed full-length S/S handle, and removable 20ga #304 S/S drawer pan, 20"x20"x5" deep, with coved corners.

ITEM # 62 SPARE NO.

ITEM # 63 2-SECTION ROLL-THRU HEATED CABINET

Quantity: One (1)

Manufacturer: Traulsen

Model: RIH232LP-FHS

SIS No.: D709

1. One (1) Model RIH232LP-FHS Spec-Line Heated Cabinet, Roll-thru, two-section, stainless steel exterior and interior, standard depth cabinet, full-height doors, accepts 66" high rack (by others) with microprocessor controls, cULus, NSF, ENERGY STAR®
2. One (1) 208-230/115v/60/1-ph, 15.5 amps, 3000 watts, direct, standard
3. One (1) Thermometer side: Left door hinged left/right hinged right, standard
4. One (1) Rear: Left door hinged left/right hinged right, standard
5. F.S.E.C. to provide and install 16 GA 6"H S/S coved base, 3/8" radius.

ITEM # 64 UNIVERSAL PAN RACK

Quantity: Two (2)

Manufacturer: FWE / Food Warming Equipment Co., Inc.

Model: OTR-UA-12

SIS No.: D709

1. Two (2) Model OTR-UA-12 Universal Tray-Pan Rack, mobile, 65"H, open sides, capacity (12) 18" x 26" or (24) 12" x 20" or (12) oval trays-pans, adjustable 1-1/2" OC, welded aluminum construction, 5" casters (2 swivel)

ITEM # 65 MOBILE WORK TABLE W/ACCESSIBLE STATION & SHEET PAN STORAGE

Quantity: One (1)

Manufacturer: Custom S/S

Model: MOB TBL 4LG-ADA

SIS No.: D709

1. One (1) Model MOB TBL 4LG-ADA Furnish and install Mobile Table with Accessible Station per Plan, Details and General Specifications on Part 2 to Part 3 herein, including:
2. 14ga S/S top with integral 2" sanitary rolled edges and eased corners. Provide an accessible section with open space below. 16ga #304 S/S cross bracing and 1-5/8" dia tubular legs with S/S gussets. (4) Legs with swivel casters, all with brake. All welds to be ground smooth and polished.
3. One (1) Self-closing drawer with (4) 2" dia ball bearing rollers traveling on 16ga S/S slides, 18ga S/S enclosure, cylinder lock, recessed full-length S/S handle, and removable 20ga #304 S/S drawer pan, 20"x20"x5" deep, with coved corners.
4. One (1) Sheet Pan Storage: Provide sheet pan storage slots above the lower shelf.

ITEM # 66 MICROWAVE OVEN

Quantity: One (1)

Manufacturer: Panasonic

Model: NE-1064F

SIS No.: D709

1. One (1) Model NE-1064F PRO Commercial Microwave Oven, 1000 Watts, 0.8 cu. ft. capacity, (6) power levels, 2- & 3-stage cooking, 20 program memory capacity, touch control pad with Braille, 99-minute timer, programmable and manual operation, program list/cycle counter, self diagnostics, tone control, bottom energy feed, interior light, see-through door with "grab & go" handle, stainless steel front, cabinet & cavity, 120v/60/1-ph, 13.4 amps, cord, NEMA 5-15P, cULus, NSF

ITEM # 67 TABLE MTD. CAN OPENER

Quantity: One (1)

Manufacturer: Edlund

Model: S-11L

SIS No.: D709

1. One (1) Model S-11L Can Opener, manual, stainless steel, with long bar and cast stainless steel base, (for cans up to 17" high), NSF certified
2. One (1) Model ST-93 Rustproof Can Opener Cleaning Tool, stainless steel bristles and stainless scraper

ITEM # 68 MOBILE TABLE W/ DRAWER

Quantity: One (1)

Manufacturer: Custom S/S

Model: CUSTOM

SIS No.: D709

1. One (1) Model CUSTOM Furnish and install Mobile Table per Plan, Details and General Specifications on Part 2 to Part 3 herein, including: 14ga S/S top with integral 2" sanitary rolled edges and eased corners. 16ga S/S undershelves. (4) 16ga #304 S/S cross bracing and tubular legs, 1-5/8" dia with S/S gussets. (4) Swivel casters with brake. All welds to be ground smooth and polished.
2. One (1) Self-closing drawer with (4) 2" dia ball bearing rollers traveling on 16ga S/S slides, 18ga S/S enclosure, cylinder lock, recessed full-length S/S handle, and removable 20ga #304 S/S drawer pan, 20"x20"x5" deep, with coved corners.

ITEM # 69 1-SECTION ROLL-THRU REFRIGERATOR

Quantity: One (1)

Manufacturer: Traulsen

Model: RRI132LPUT-FHS

SIS No.: D709

1. One (1) Model RRI132LPUT-FHS Spec-Line Refrigerator, Roll-thru, one-section, self-contained refrigeration, StayClear™ Condenser, stainless steel exterior and interior, standard depth cabinet, full-height doors, accepts 66" high racks (by others) with microprocessor controls, 1/3 HP, cULus, NSF
2. One (1) 115v/60/1-ph, 11.6 amps, NEMA 5-15P, standard
3. One (1) Thermometer side door: hinged on right, standard
4. One (1) Rear door: hinged on left
5. F.S.E.C. to provide and install 16 GA 6"H S/S coved base, 3/8" radius.

ITEM # 70 UNIVERSAL PAN RACK

Quantity: One (1)

Manufacturer: FWE / Food Warming Equipment Co., Inc.

Model: OTR-UA-12

SIS No.: D709

1. One (1) Model OTR-UA-12 Universal Tray-Pan Rack, mobile, 65"H, open sides, capacity (12) 18" x 26" or (24) 12" x 20" or (12) oval trays-pans, adjustable 1-1/2" OC, welded aluminum construction, 5" casters (2 swivel)

ITEM # 71 MOBILE HEATED CABINET

Quantity: Three (3)

Manufacturer: Cres Cor

Model: H1381834D

SIS No.: D709

1. Three (3) Model H1381834D Cabinet, Mobile Heated, insulated, top-mount heater assembly, recessed push/pull handle, channel pan slides hold (32) 18" x 26" pans on 1-1/2" centers, anti-microbial latches, dutch doors, aluminum exterior & interior, (4) heavy duty 5" swivel casters (2) braked
2. Three (3) 120v/60/1-ph, 1.5 kW, 12.0 amp, 10 ft power cord, NEMA 5-15P, standard
3. Three (3) Right-hand door swing (top & bottom doors), standard
4. Three (3) Model 1405 159 Perimeter Bumper, add 2" to OA dimensions, non-marking, gray
5. Three (3) Model 1087 101 Rear Push Handle
6. Three (3) 6" polyurethane casters, set of 4

ITEM # 72 SPARE NO.

ITEM # 73 HAND SINK W/FAUCET, SOAP & TOWEL DISPENSERS & SIDE SPLASHES

Quantity: One (1)

Manufacturer: Advance Tabco

Model: 7-PS-80

SIS No.: D709

1. One (1) Model 7-PS-80 Wall-mtd Hand Sink, 14"W x 10" front-to-back x 5" deep bowl, 20ga 304 series S/S, splash mounted faucet, lever drain with overflow, P-trap, soap & towel dispenser, wall bracket, NSF
2. One (1) Model 7-PS-15 Welded Side Splash, 12" tall, both sides, for hand sinks with 14" wide x 10" front-to-back bowl, splash mounted faucets
3. Replace Faucet with _____.

ITEM # 74 PREP TABLE W/MARINE EDGE AND DRAWERS

Quantity: One (1)

Manufacturer: Custom S/S

SIS No.: D709

1. One (1) Furnish and install Prep Table per Plan, Details and General Specifications on Part 2 to Part 3 herein and to include: 14ga S/S top with marine edge. 8"H x 2" thick integral back and side splashes where adjacent to wall. 16ga S/S undershelves. 16ga #304 S/S tubular legs, 1-5/8" dia with 1" adjustable S/S bullet feet. All welds to be ground smooth and polished.
2. Two (2) Model CUSTOM Furnish and install Drawer Assembly per Plan, Details and General Specifications on Part 2 to Part 3 herein, including: Self-closing drawer with (4) 2" dia ball bearing rollers traveling on 16ga S/S slides. Support slide to have minimum load capacity of 150 lbs per pair. Provide 18ga S/S enclosure, cylinder lock, recessed full-length S/S handle, and removable 20ga #304 S/S drawer pan, with coved corners.
3. INDIRECT WASTE

ITEM # 75 WALL-MTD SHELF

Quantity: One (1)

Manufacturer: Custom S/S

Model: CUSTOM

SIS No.: D709

One (1) Model CUSTOM Furnish and install Wall Shelf per Plan, Details and General Specifications on Part 2 to Part 3 herein, including: 16ga #304 S/S with 1-1/2" sanitary downward rolled rim on front and 2" turn up edge where adjacent to wall. Mount 60" AFF. 14ga #304 S/S wall brackets, tac weld to the underside of the shelf.

ITEM # 76 PREP SINKS W/ S/S COVERS- PART OF ITEM #74

Quantity: One (1)

Manufacturer: Custom

Model: CUSTOM

SIS No.: D709

1. One (1) Model CUSTOM Part of item #78: 2-Compartment Sink: 14ga #304 S/S with coved interior corners, horizontal and vertical. Pitch to center drain. Provide drain and removable crumb cup.
2. Two (2) CSS Model CUSTOM Furnish and Install Sink Covers per Plan, Details and General Specifications on Part 2 to 3 hereing, including: 14ga S/S construction with grommet finger hole.
3. One (1) CSS Sink Cover Storage: Covers will store below in a storage slot above the lower shelf.

ITEM # 77 TWIST WASTE W/ OVERFLOW

Quantity: Two (2)

Manufacturer: T&S Brass

Model: B-3952-01

SIS No.: D709

1. Two (2) Model B-3952-01 Waste Valve, twist handle, 3-1/2" sink opening, 2" drain outlet with overflow assembly (replaces B-3917-01)

ITEM # 78 12" SPLASH MOUNT FAUCET W/ WRIST HANDLES

Quantity: One (1)

Manufacturer: T&S Brass

Model: B-0231

SIS No.: D709

1. One (1) Model B-0231 Sink Mixing Faucet, 12" swing nozzle, wall mounted, 8" centers on sink faucet with 1/2" IPS eccentric flanged female inlets
2. Two (2) Model B-WH4 Wrist Action Handle
3. One (1) Model B-0199-01 Aerator, non-splash, 55/64" -27 female aerator threads, fits goosenecks & nozzles

4. One (1) Model B-0230-K Installation Kit , (2) 1/2" NPT nipples, lock nuts and washers, (2) short "Ell" 1/2" NPT female x male

ITEM # 79 SPARE NO.

ITEM # 80 SPARE NO.

ITEM # 81 MOBILE ACCESSIBLE CASH REGISTER STAND

Quantity: One (1)

Manufacturer: G.A. Systems Inc.

Model: D3136A

SIS No.: D709

1. One (1) Model D3136A Cashier Stand Cabinet, 31-1/8"W x 36-3/8"D x 34"H, open understorage, (1) locking pin, stainless steel trim, galvanized steel body, (4) 3" plate non-marking swivel casters with brakes, ADA Compliant, ETL-Sanitation
2. One (1) High pressure laminate exterior finish, available in custom colors - contact factory for color options

ITEM # 82 POINT-OF-SALE UNIT - BY OWNER

Quantity: One (1)

Manufacturer: Custom

Model: CUSTOM

SIS No.: D709

1. One (1) Model CUSTOM Provided by Owner, Installed by General Contractor

ITEM # 83 CARD READER - BY OWNER

Quantity: One (1)

Manufacturer: Custom

Model: CUSTOM

SIS No.: D709

1. One (1) Model CUSTOM Provided by Owner, Installed by General Contractor

ITEM # 84 MOBILE DUAL ACCESS MILK COOLER

Quantity: One (1)

Manufacturer: Beverage Air

Model: STF58HC-1-S

SIS No.: D709

1. One (1) Model STF58HC-1-S School Milk Cooler, forced air, 58"W x 34"D x 47-3/4"H, 24.3 cu. ft., dual access, flat top carton capacities, (16) 13" x 13" x 11" or (10) 19" x 13" x 11 case capacities, self-latching doors/lids with safety bumpers, cylinder lock, exterior digital thermometer, epoxy coated steel wire floor racks, electronic control, auto defrost, stainless

steel interior & exterior, floor drain, R290 Hydrocarbon refrigerant, 1/3 HP, cULus, UL EPH Classified, UL-Sanitation, Made in USA
2. One (1) Self-Contained refrigeration
3. One (1) 115v/60/1-ph, 3.3 amps, cord with NEMA 5-15P
4. One (1) Model 00C01-011A Wrap around bumper, for SMF58 series (field installation required)
5. One (1) Model 401-127A-- Plate Caster, 5" standard, with brake, for STF 49/58 models (each)

ITEM # 85 STUDENT'S HOT/ COLD SERVING COUNTER

Quantity: One (1)

Manufacturer: Duke Manufacturing

Model: TST-74SS

SIS No.: D709

1. One (1) Model TST-74SS Thurmaduke™ Solid Top Unit, mobile utility counter, 74"W x 32"D x 36"H, 16ga stainless steel top, 20ga stainless steel body & undershelves, 5" dia. gray poly swivel casters & brakes, NSF
2. One (1) Model MOD-14-5 14ga stainless steel top, in lieu of standard
3. One (1) Model MOD-12-74 Extend width of top up to 12", for a 44" or less overall top, with stainless steel fixed brackets **7" extended on customer side with (2) 1/8" die-formed rubbing tracks**
4. One (1) Model ILD Internal Locking Device (on both ends), stainless steel pin & latch line up device under countertop, per unit price (Note: Units required to be portable)
5. One (1) Model P-LAM Veneer plastic laminate on body (NOTE: Manufacturer's standard colors ONLY, metallics, color-core & raised textures may incur additional cost)
6. One (1) Model MOD-5P Veneer on customer's side
7. Two (2) Model MOD-P-END Veneer on end, each
8. One (1) Model CORD-8 8 ft. cord & plug
9. One (1) Model E-OP2 Electric outlet, mounted in base, with galvanized junction box, duplex or single receptacle & stainless steel cover, wired to existing power source
10. One (1) Model CUT-OP2 Rectangular cutout with raw edge, must be 12" or less, in counter top, body panel or a shelf (specify cutout size & location) ** In rail**
11. One (1) Model CUT-OP3 Rectangular cutout with reinforced edges, in counter top, body panel or a shelf, counter top max. right to left is 4" less than unit length (specify cutout size & location) **For drop in #86**
12. One (1) Model TDST-MOD For special height rail
13. One (1) Model LOUVER Stainless louvered panel at customer side for drop-in ventilation
14. One (1) hinged louvered grille on operator side
15. One (1) Model CUSTOM Installation of guard supplied by dealer Installed by Duke , item#87

ITEM # 86 4-PAN HOT / COLD FOOD WELL UNIT, DROP-IN UNIT-PART OF ITEM #85

Quantity: One (1)

Manufacturer: Duke Manufacturing

Model: HCF-4

SIS No.: D709

1. One (1) Model HCF-4 Hot/Cold/Freeze Drop-In Food Well Unit, heated & refrigerated, 65" long, (4) 12" x 20" individual pans, 300 series stainless steel top rim, 5" deep 300 series stainless steel interior liners, steel exterior housing, individual wired remote digital controls for hot or cold operation, air-cooled condensing unit, individual drains manifolded to a valve, 6' cord & plug, UL, cULus, NSF #4 & 7
2. One (1) Model HCF-4-208 120/208v/60/1-ph, 16.0 amps, NEMA L14-20P

ITEM # 87 ADJUSTABLE SNEEZE GUARD W/ S/S PASS SHELF & END GLASS

Quantity: One (1)

Manufacturer: English Manufacturing

Model: AMA-101A/101-3

SIS No.: D709

1. One (1) Model AMA-101A/101-3 Furnish and Install sneeze guard per plans, details and specifications including:
2. Adjustaguard sneeze guard combo
3. Length per plans, 18" High
4. Full or Self Service
5. Two (2) Model AMA-101A END POSTS END POSTS WITH F-4 MOUNTING W/ S/S BEVEL
6. Tubing: 1" Round S/S tubing w/ brushed #4 S/S finish
7. One (1) Model AMA-101 CENTER POST AMA-101 CENTER POST WITH MOUNTING TO BE DETERMINED
8. Tubing: 1" Round S/S tubing w/ brushed #4 S/S finish
9. One (1) Model S/S PASS SHELF ONE PIECE 16GA #304 S/S
10. Two (2) Model GLASS PANEL 3/8"Clear tempered glass with 1" radius corners
11. Two (2) Model AMA-101A END PANEL 1/4" clear tempered glass panel

ITEM # 88 SERVING COUNTER W/ ACCESSIBLE STATION

Quantity: One (1)

Manufacturer: Duke Manufacturing

Model: TST-74SS

SIS No.: D709

1. One (1) Model TST-74SS Thurmaduke™ Solid Top Unit, mobile utility counter, 74"W x 32"D x 36"H, 16ga stainless steel top, 20ga stainless steel body & undershelves, 5" dia. gray poly swivel casters & brakes, NSF
2. Open undercounter area without shelving for access per drawings
3. One (1) Model MOD-14-5 14ga stainless steel top, in lieu of standard
4. One (1) Model MOD-12-74 Extend width of top up to 12", for a 44" or less overall top, with stainless steel fixed brackets **7" extended on customer side with (2) 1/8" die-formed rubbing tracks**
5. One (1) Model ILD Internal Locking Device (on both ends), stainless steel pin & latch line up device under countertop, per unit price (Note: Units required to be portable)
6. One (1) Model P-LAM Veneer plastic laminate on body (NOTE: Manufacturer's standard colors ONLY, metallics, color-core & raised textures may incur additional cost)

7. One (1) Model MOD-5P Veneer on customer's side
8. Two (2) Model MOD-P-END Veneer on end, each
9. One (1) Model CUT-OP2 Rectangular cutout with raw edge, must be 12" or less, in counter top, body panel or a shelf (specify cutout size & location)
10. **Rectangular cutout in base for wheel chair access**
11. One (1) Model CUSTOM Installation of guard supplied by dealer Installed by Duke , item#89
12. One (1) Model TDST-MOD For special height rail **Cashier rail**

ITEM # 89 ADJUSTABLE SNEEZE GUARD W/ S/S PASS SHELF & END GLASS

Quantity: One (1)

Manufacturer: English Manufacturing

Model: AMA-101A/101-3

SIS No.: D709

1. One (1) Model AMA-101A/101-3 Furnish and Install sneeze guard per plans, details and specifications including:
2. Adjustaguard sneeze guard combo
3. Length per plans, 18" High
4. Full or Self Service
5. Two (2) Model AMA-101A END POSTS END POSTS WITH F-4 MOUNTING W/ S/S BEVEL
6. Tubing: 1" Round S/S tubing w/ brushed #4 S/S finish
7. One (1) Model AMA-101 CENTER POST AMA-101 CENTER POST WITH MOUNTING TO BE DETERMINED
8. Tubing: 1" Round S/S tubing w/ brushed #4 S/S finish
9. One (1) Model S/S PASS SHELF ONE PIECE 16GA #304 S/S
10. Two (2) Model GLASS PANEL 3/8"Clear tempered glass with 1" radius corners
11. Two (2) Model AMA-101A END PANEL 1/4" clear tempered glass panel

ITEM # 90 STUDENT'S HOT/ COLD SERVING COUNTER

Quantity: One (1)

Manufacturer: Duke Manufacturing

Model: TST-74SS

SIS No.: D709

1. One (1) Model TST-74SS Thurmaduke™ Solid Top Unit, mobile utility counter, 74"W x 32"D x 36"H, 16ga stainless steel top, 20ga stainless steel body & undershelves, 5" dia. gray poly swivel casters & brakes, NSF
2. One (1) Model MOD-14-5 14ga stainless steel top, in lieu of standard
3. One (1) Model MOD-12-74 Extend width of top up to 12", for a 44" or less overall top, with stainless steel fixed brackets **7" extended on customer side with (2) 1/8" die-formed rubbing tracks**
4. One (1) Model ILD Internal Locking Device (on both ends), stainless steel pin & latch line up device under countertop, per unit price (Note: Units required to be portable)
5. One (1) Model P-LAM Veneer plastic laminate on body (NOTE: Manufacturer's standard colors ONLY, metallics, color-core & raised textures may incur additional cost)
6. One (1) Model MOD-5P Veneer on customer's side

7. Two (2) Model MOD-P-END Veneer on end, each
8. One (1) Model CORD-8 8 ft. cord & plug
9. One (1) Model E-OP2 Electric outlet, mounted in base, with galvanized junction box, duplex or single receptacle & stainless steel cover, wired to existing power source
10. One (1) Model CUT-OP2 Rectangular cutout with raw edge, must be 12" or less, in counter top, body panel or a shelf (specify cutout size & location) ** In rail**
11. One (1) Model CUT-OP3 Rectangular cutout with reinforced edges, in counter top, body panel or a shelf, counter top max. right to left is 4" less than unit length (specify cutout size & location) **For drop in #91**
12. One (1) Model TDST-MOD For special height rail
13. One (1) Model LOUVER Stainless louvered panel at customer side for drop-in ventilation
14. One (1) hinged louvered grille on operator side
15. One (1) Model CUSTOM Installation of guard supplied by dealer Installed by Duke , item#92

ITEM # 91 4-PAN HOT / COLD FOOD WELL UNIT, DROP-IN UNIT-PART OF ITEM #90

Quantity: One (1)

Manufacturer: Duke Manufacturing

Model: HCF-4

SIS No.: D709

1. One (1) Model HCF-4 Hot/Cold/Freeze Drop-In Food Well Unit, heated & refrigerated, 65" long, (4) 12" x 20" individual pans, 300 series stainless steel top rim, 5" deep 300 series stainless steel interior liners, steel exterior housing, individual wired remote digital controls for hot or cold operation, air-cooled condensing unit, individual drains manifolded to a valve, 6' cord & plug, UL, cULus, NSF #4 & 7
2. One (1) Model HCF-4-208 120/208v/60/1-ph, 16.0 amps, NEMA L14-20P

ITEM # 92 ADJUSTABLE SNEEZE GUARD W/ S/S PASS SHELF & END GLASS

Quantity: One (1)

Manufacturer: English Manufacturing

Model: AMA-101A/101-3

SIS No.: D709

1. One (1) Model AMA-101A/101-3 Furnish and Install sneeze guard per plans, details and specifications including:
2. Adjustaguard sneeze guard combo
3. Length per plans, 18" High
4. Full or Self Service
5. Two (2) Model AMA-101A END POSTS END POSTS WITH F-4 MOUNTING W/ S/S BEVEL
6. Tubing: 1" Round S/S tubing w/ brushed #4 S/S finish
7. One (1) Model AMA-101 CENTER POST AMA-101 CENTER POST WITH MOUNTING TO BE DETERMINED
8. Tubing: 1" Round S/S tubing w/ brushed #4 S/S finish
9. One (1) Model S/S PASS SHELF ONE PIECE 16GA #304 S/S
10. Two (2) Model GLASS PANEL 3/8"Clear tempered glass with 1" radius corners
11. Two (2) Model AMA-101A END PANEL 1/4" clear tempered glass panel

ITEM # 93 MOBILE TRAY DISPENSER

Quantity: One (1)

Manufacturer: Caddy

Model: CM-1814-2C

SIS No.: D709

1. One (1) Model CM-1814-2C Caddy Magic Tray Dispenser, cantilever style, unheated, double stack, for 14" x 18" trays, capacity up to (75) trays per stack, self-leveling platform, 4" swivel casters, NSF
2. One (1) For freight classes, contact Caddy's shipping manager at shipping@caddycorp.com
3. One (1) Model ACC-41 Caster brakes 4" & 5" (pair)
4. One (1) Model ACC-51 Tray stacking guides

ITEM # 94 SPARE NO.

ITEM # 95 SPARE NO.

ITEM # 96 SPARE NO.

ITEM # 97 SPARE NO.

ITEM # 98 SPARE NO.

ITEM # 99 SPARE NO.

ITEM # 100 SPARE NO.

ITEM # 101 SPARE NO.

ITEM # 102 SPARE NO.

ITEM # 103 SPARE NO.

ITEM # 104 SPARE NO.

ITEM # 105 SPARE NO.

ITEM # 110 MOBILE INSULATED TRANSPORT CABINETS

Quantity: Six (6)

Manufacturer: Cres Cor

Model: 1091840

SIS No.: D709

1. Six (6) Model 1091840 Utility Cabinet, mobile, enclosed, insulated, (40) 18" x 26" pan capacity, channel slides with 1-1/2" spacing, solid door, aluminum construction, (4) heavy duty 5" swivel casters (2) braked
2. Six (6) Model 1405 000 Perimeter Bumper, add 2" to OA dimensions, non-marking, gray
3. Six (6) Model 1087 000 Push Handle
4. Six (6) 5" polyurethane casters, set of 4

ITEM # 111 WORK COUNTER

Quantity: One (1)

Manufacturer: Custom S/S

Model: CUSTOM

SIS No.: D709

1. One (1) Model CUSTOM Furnish and install Counter per Plan, Details and General Specifications on Part 2 to Part 3 herein, including:
2. 14ga S/S top with 2" square edge, turn-down 90 degree. 6"Hx2" thick integral backsplash and end splash where adjacent to wall. 18ga S/S cabinet with 16ga S/S fixed bottom and adjustable intermediate shelves. Shelves shall be turned up at rear for sanitary cove.
3. One (1) Cutout for items to be installed into this counter shall be turned down with no exposed raw edges on top horizontal surface.
4. One (1) Provide clean and clear openings (as required) for plumbing and electrical hook ups.
5. One (1) All welds ground smooth and polished.
6. One (1) Curb-mounted cabinet to be attached securely to curb below.
7. NOTE: Field verification required.

ITEM # 112 MOBILE U/C REGRIGERATOR W/ 3" CASTERS

Quantity: One (1)

Manufacturer: Beverage Air

Model: WTR27HC-FLT

SIS No.: D709

1. One (1) Model WTR27HC-FLT Worktop Refrigerator, one-section, 27"W, 5.25 cu. ft., (1) solid door, (2) shelves, interior thermometer, stainless steel front, 2-1/2" thick top & sides, aluminum interior, flat top, rear-mounted self-contained refrigeration, R290 Hydrocarbon refrigerant, 1/10 HP, cULus, UL EPH Classified, UL-Sanitation, Made in USA
2. One (1) Self-Contained refrigeration
3. One (1) 115v/60/1-ph, 2.0 amps, cord with NEMA 5-15P
4. One (1) Door hinged on right standard
5. One (1) Solid hinged stainless steel door, standard
6. One (1) 3" Casters, in lieu of standard 6" heavy duty casters, no charge when specified on order

ITEM # 113 WALL-MTD SHELF

Quantity: One (1)

Manufacturer: Custom S/S

Model: CUSTOM

SIS No.: D709

1. One (1) Model CUSTOM Furnish and install Wall Shelf per Plan, Details and General Specifications on Part 2 to Part 3 herein, including: 16ga #304 S/S with 1-1/2" sanitary

downward rolled rim on front and 2" turn up edge where adjacent to wall. Mount 60" AFF. 14ga #304 S/S wall brackets, tac weld to the underside of the shelf.

ITEM # 114 DROP-IN 2-CPT SINK

Quantity: One (1)

Manufacturer: Advance Tabco

Model: DI-2-10

SIS No.: D709

1. One (1) Model DI-2-10 Drop-In Sink, 2-compartment, 10" wide x 14" front-to-back x 10" deep each/bowl, 18 gauge 304 stainless steel, deck mounted 8" swing spout faucet, basket drain

ITEM # 115 DISHWASHER, UNDERCOUNTER

Quantity: One (1)

Manufacturer: Champion

Model: UL-130

SIS No.: D709

1. One (1) Model UL-130 Dishwasher, undercounter, 24"W x 25"D x 33-3/4"H, low temperature chemical sanitizing, (21) racks/hour capacity, top mounted controls, air glide door with safely switch, upper & lower interchangeable wash/rinse spray arms, pumped drain operation, built-in detergent/rinse-air/sanitizer dispensing pumps, fill & dump operation, electric tank heater with low-water protection, stainless steel top & side panels, 1 HP wash pump motor, includes: (1) peg rack & (1) flat rack, voltage 115v/60/1ph, UL, cETLus, NSF
2. One (1) Fuel Surcharge (NET/NET)
3. One (1) Champion ION scale prevention system, shipped un-mounted
4. One (1) Model 101273 Flat Bottom Dishrack, 20" x 20", additional
5. One (1) Model 101285 Peg Dishrack, 20" x 20", additional
6. One (1) Model ROLLER KIT Roller Kit, 1", set of (4) casters

ITEM # 116 ACCESSIBLE HAND SINK W/ SOAP & TOWEL DISPENSER

Quantity: One (1)

Manufacturer: John Boos

Model: PBHS-ADA-P-STD

SIS No.: D709

1. One (1) Model PBHS-ADA-P-STD Pro-Bowl Hand Sink, wall mount, 14"W x 16" front-to-back x 5" deep bowl, (1) set of splash mount faucet holes with 4" centers, 1-7/8" drain, drain basket included, soap & towel dispenser, removable front panel, includes mounting bracket, stainless steel construction, ADA compliant, NSF, CSA-Sanitation (Goose neck faucet included)

2. One (1) Model PB-SMMK-90 Splash Mount Faucet Mounting Kit, includes (2) 1/2" supply nipples, (2) retainer nuts, (2) lock washers, (2) rubber washers and (2) male & female short 90° elbows
3. One (1) Model PB-PT1.5 P-Trap, 1-1/2" & tail pipe

ITEM # 117 SPARE NO.

ITEM # 118 SPARE NO.

ITEM # 119 WALL BACKING (NOT SHOWN ON FLOOR PLAN)

Quantity: One (1)

Manufacturer: Custom S/S

SIS No.: D709

1. One (1) Furnish and install Wall Backing for Metal Frame Construction per Plan, Seismic Details and General Specifications on Part 2 to Part 3 herein, including: Minimum 12"W x height per Seismic sheet. Wall backing shall run 6" beyond full length of equipment item at each side. FSEC shall provide and GC shall install metal backing, min 14ga galvanized steel. Secure wall backing to studs.

END OF SECTION

SECTION 115213 - PROJECTION SCREENS

PART 2 PRODUCTS

END OF SECTION

SECTION 116623 - GYMNASIUM EQUIPMENT

PART 1 GENERAL

1.1 SECTION INCLUDES

A. Basketball backboards, goals, and support framing.

B. Wall mounted protection pads.

1.2 RELATED REQUIREMENTS

A. Section 055000 - Metal Fabrications: Secondary structural members supporting gymnasium equipment.

1.3 REFERENCE STANDARDS

A. ASTM E84 - Standard Test Method for Surface Burning Characteristics of Building Materials; 2021a.

B. AWS B2.1/B2.1M - Specification for Welding Procedure and Performance Qualification; 2014, with Amendment (2015).

C. AWS D1.1/D1.1M - Structural Welding Code - Steel; 2020, with Errata (2021).

D. NFPA 70 - National Electrical Code; Most Recent Edition Adopted by Authority Having Jurisdiction, Including All Applicable Amendments and Supplements.

E. NFPA 286 - Standard Methods of Fire Tests for Evaluating Contribution of Wall and Ceiling Interior Finish to Room Fire Growth; 2019.

1.4 ADMINISTRATIVE REQUIREMENTS

A. Large Components: Ensure that large components can be moved into final position without damage to other construction.

B. Electrically Operated Equipment: Coordinate location and electrical characteristics of service connection.

1.5 SUBMITTALS

A. See Sections 013300 - Submittal Requirements, for submittal procedures.

B. Product Data: Provide manufacturer's data showing configuration, sizes, materials, finishes, hardware, and accessories; include:
   1. Electrical characteristics and connection locations.
   2. Fire rating certifications.
   3. Manufacturer's installation instructions.

C. Shop Drawings: For custom fabricated equipment indicate, in large scale detail, construction methods; method of attachment or installation; type and gauge of metal, hardware, and fittings; plan front elevation; elevations and dimensions; minimum one cross section; utility requirements as to types, sizes, and locations.

D. Erection Drawings: Detailed dimensional requirements for proper location of equipment.

E. Samples: Submit samples of wall pad coverings in manufacturer's available range of colors. For Volleyball equipment submit protective pad fabric sample.

F. Operating and maintenance data for each operating equipment item.

G. Welders Qualification Statement: Welders92 certificates in accordance with AWS B2.1/B2.1M and dated no more than 12 months before start of scheduled welding work.

H. Warranty: Submit manufacturer warranty and ensure that forms have been completed in Owner's name and registered with manufacturer.

1.6 QUALITY ASSURANCE

A. Manufacturer Qualifications: Company specializing in manufacturing products specified in this section, with not less than ten years of documented experience.

B. Installer Qualifications: Company specializing in performing work of the type specified with minimum five years of experience.

C. Welder Qualifications: Welding processes and welding operators qualified in accordance with AWS D1.1/D1.1M and no more than 12 months before start of scheduled welding work.

1.7 DELIVERY, STORAGE, AND HANDLING

A. Deliver products to project site in manufacturer's original packaging with factory original labels attached.

B. Store products indoors and elevated above floor; prevent warping, twisting, or sagging.

C. Store products in accordance with manufacturer's instructions; protect from extremes of weather, temperature, moisture, and other damage.

1.8 WARRANTY

A. See Section 017800 - Closeout Procedures and Submittals, for additional warranty requirements.

PART 2 PRODUCTS

2.1 MANUFACTURERS

A. Gymnasium Equipment:
   1. Jaypro Sports, LLC.; www.jaypro.com.
   2. Draper, Inc: www.draperinc.com/#sle.
   3. As listed under individual Products.
   4. Or Approved Equal.

2.2 GENERAL REQUIREMENTS

A. See drawings for sizes and locations, unless noted otherwise.

B. Where mounting dimensions or sizes are not indicated, comply with applicable requirements of the following:
   1. National Federation of State High School Associations (NFHS) sports rules.

C. Provide mounting plates, brackets, and anchors of sufficient size and strength to securely attach equipment to building structure; comply with requirements of Contract Documents.

D. Hardware: Heavy duty steel hardware, as recommended by manufacturer.

E. Electrical Wiring and Components: Comply with NFPA 70; provide UL-listed equipment.

F. Structural Steel Fabrications: Welded in accordance with AWS D1.1/D1.1M, using certified welders.

2.3 INTERIOR BASKETBALL

A. Basketball System: Backstop assembly, backboard, and goal.
   1. Manufacturers:
      a. Basis of Design: Jaypro Sports,

B. Model #: J849-FFFB, Single Drop, Forward Folding, Front Braced.
   1. Type: Singe drop, forward folding, front braced with attachment up to 32'.
   2. Main Mast Stem: 6-5/8" O.D. 11-gauge structural steel tube.
   3. Anti-Sway Braces: 2-3/8" O.D. 10-gauge structural steel tube with precision cut ends for maximum weld area. Sway braces shall attach to the mast no higher than 36" above the backboard for maximum stability.
   4. Auxiliary Braces: 1.90" O.D. 13-gauge steel tube braces for increased stability for attachment elevation exceeding 28'.
   5. Mast Header: 5" heavy duty structural c-channel.
   6. Mast Construction: Fully welded construction in accordance with American Welding Society (AWS), D1.1 "Structural Welding Code - Steel." Bolt-together masts are not acceptable.
   7. Front Brace: Operates with 2-3/8" O.D. 12-gauge structure steel tube with heavy duty folding knuckle joint.
   8. Knuckle Joint: Locks unit into playing position.
   9. Fittings and Support Structure: Backstop supported from existing structure with capped 3-1/2" O.D. 11-gauge structural steel tube with heavy duty precision formed and/or welded steel support fittings.
   10. Swing Hinge Fittings: Backstop suspended from 3-1/2" O.D. support pipe by 7/8" forged eyebolts with press fit oil-impregnated bronze bearings. 2" of adjustability provided for precise plumbing of backstop during installation.
   11. Weight Lock: Mast centerline offset 2" forward of swing hinge fittings to ensure backstop securely weight locks the unit into the playing position.
   12. Hoist Cable: 1/4" Diameter galvanized aircraft cable with 7000 lbs ultimate break strength. Cable disengages knuckle joint, allowing brace to fold.
   13. Goals: Mounted directly through the backboard to a direct goal mount which is secured to the 6-5/8" main mast stem. Direct goal mount eliminates any strain on backboard should any player hang on rim.
   14. Finish: All metal parts, pipes, and fittings to be powder coated
   15. Compliance: Backstop system meets all NCAA and NFSHSA regulations and requirements.
   16. Finish: All metal parts, pipes, and fittings to be powder coated
   17. Compliance: Backstop system meets all NCAA and NFSHSA regulations and requirements.

C. Basketball Backstop Winches:
   1. TW-2000, TorkWinch 1 HP Electric Winch

a. Type: Fully enclosed, direct drive winch designed to hold backstop at any position during raising or lowering. Winch is maintenance free with no oil, belts, or chains.
b. Motor: 1 HP, instantly reversing, 110 volt, single phase electric torque motor utilizing 3-wire control system.
c. Frame: Precision interlocking steel frame for high rigidity and precise alignment.
d. Hoist Cable: 1/4" 7 x 19 galvanized aircraft cable with 7,000 pounds ultimate break strength.
e. Rope Pressure Roller: Torsion spring tensioning roller to ensure cable tracks properly in grooves even under slack cable conditions.
f. Cable Drum: Cast aluminum grooved for 1/4" aircraft cable to facilitate smooth take-up of cable and proper spooling. Supported in large diameter ball bearings.
g. Limit Switches: Integral adjustable upper and lower limit switches making the sett
h. Mounting: Universal type mounting bracket, mounted upside down or right side up, with cable pull from any one of three different directions.
i. Controls: Specify type of control in subsequent paragraph.
j. Warranty: Limited 1 year warranty.

2. PL-1000, Posilok Safety Strap
   a. Application: For use with 1400 Fold-Up Wall Mounted Backstop and all Ceiling Suspended Folding Backstops.
   b. Lock: Inertia sensitive to automatically lock basketball backstop in position at any time during raising, lowering, or being held in the storage position. Initiation of locking mechanism occurs when a sudden increase in either tension or speed shall occur.
   c. Reset: Fully automatic reset mechanism requiring no poles, ropes, levers, or buttons.
   d. Telltale Indicator: Breakaway loop sewn into strap containing bright colored warning label for notification when safety belt has been called into action.
   e. Warranty: Limited 1 year warranty.

D. Basketball Backstop Backboards
1. GBRUB-42, 42" x 72" Unbreakable Rectangular Glass Backboard
   a. Application: For use with goals with 4" (vertical) x 5" (horizontal) mounting centers. Meets all NBA, WNBA, NCAA, and NFSHSA regulations.
   b. Construction: 1/2" tempered glass cushioned within shock absorbing vinyl gasket. Frame constructed of high strength aluminum channel with engineered lower reinforced steel member.
   c. Frame Perimeter: Clear anodized anti-glare aluminum channel outer frame.
   d. Goal Mount: Designed to transfer impact load on goal directly to support structure, without imparting any stress on the glass.
   e. Border and Target: Official white color permanently fused into the face of the glass.
   f. Warranty: Limited lifetime warranty against breakage.

E. Basketball Backstop Goals
1. GBA-342A, Economy Competitor Scholastic Breakaway Goal, 42" Boards
   a. Application: Universal goal for use with backboards with 5" x 4" or 5" x 5" mounting pattern. Meets all NBA, WNBA, NCAA, and NFSHSA regulations.
   b. Rim: 5/8" diameter steel rod braced by 3/16" die cut steel bracing welded to the underside of ring.
   c. Net Attachment: 12 pigtail loop attachments on underside of goal ring.

d. Pressure Release Mechanism: Automatically releases rim when static force exceeding the release setting is applied to the top of the goal at point most distant from the backboard. Spring loaded to instantaneously release back to playing position.
e. Settings: Factory pre-set to 180 lbs - 230 lbs with in-the-field adjustability to comply with NCAA recommendation rebound characteristics of non-moveable ring.
f. Net: White anti-whip nylon net.
g. Finish: Official durable orange powder coat.
h. Warranty: Limited 3 year warranty.

F. Gym Equipment Group Control Systems
1. MEC2, Master Equipment Controller 2
a. Operation: Touchscreen operation of electrical winches and motors, centrally located so equipment is in full view of operator. Capable of operating up to 256 basketball backstops or other gymnasium equipment and/or up to 512 units of auxiliary gymnasium electrical equipment. Equipment shall operate individually or groups of up to eight components (requires one 15A circuit for each device in grouped operation -OR- one 30A circuit for every two devices).
b. Touchscreen: 5" projected capacitive glass touchscreen. Touchscreen shall include flush mounted black powder coated bezel with 7-5/8" W x 5-3/4" H overall dimensions. Any operator that is not projected capacitive shall not be approved as equals.
c. Mounting: Flush mounted into standard 2-gang multi-gang box (6-13/16" W x 4-1/2" H x 2-1/2" (minimum) D) supplied by others. Touchscreen to be located in clear, unobstructed view of all controlled devices.
d. Built-in Safety Feature: Constant pressure required on touchscreen for operation of gymnasium equipment.
e. Security Code: Up to 50 unique logins with tiered access to prevent unauthorized use and/or modifications.
f. Time Delay: Touch pad shall automatically revert back to secure mode if use within 15-60 seconds (field configurable).
g. Desired Operation Mode: Control of specific gymnasium equipment or auxiliary equipment selected by entering assigned component or group number.
h. Main Relay Panel: Main relay panel shall individually control 8 motorized components or up to 16 auxiliary components. Main relay panel shall contain 2 banks of eight 30-amp relays for operating 8 momentary-controlled type (up and down), 0-230VAC or 0-30VDC pieces of equipment.
i. Expansion Relay Panels: Maximum of 62 expansion relay panels per network, available in two economical sizes to meet job requirements:
1) Eight 30-amp relays for operating 4 motorized components or up to 8 auxiliary components.
2) Four 30-amp relays for operating 2 motorized components or up to 4 auxiliary components.
j. Programming: Intuitive menu screens for fast, easy programming. No switches or no removal of screens necessary.
k. Electrical Programming: System electrical characteristics (i.e. number and amperage of circuits provided) entered to prevent relay board from improper use.
l. Warranty: Limited one (1) year warranty.
2. Backboards: Tempered glass, rectangular shaped.
a. Frame: Brushed aluminum edge, steel mounting.

b. Markings: Painted.
c. Color: Manufacturer's standard.

3. Goals: Steel rim, mounted to backboard, with attached nylon net; complete with mounting hardware.
   a. Net Attachment Device: Tube-tie.
   b. Finish: Powder coat orange.

2.4 WALL PADDING

A. Wall Padding: Fabric covered urethane wall protection pads; Wall Pads as manufactured by Draper, Inc.
   1. Surface Burning Characteristics: Flame spread index (FSI) of 25 or less, smoke developed index (SDI) of 450 or less, Class A, when tested in accordance with ASTM E84 as a complete panel.
   2. Flammability: Comply with NFPA 286.
   3. Covering: Vinyl-coated polyester fabric, mildew and rot resistant; stapled to back of board.
      a. Color: Marine Blue.
      b. Texture: Embossed leather-look.
      c. Fabric Weight: 14 oz/sq yd, minimum.
      d. Resistant to rot, mildew, and ultraviolet light.
   4. Foam: Firm, polyurethane, with 6 pcf nominal density.
   5. Foam Thickness: 2 inches.
   6. Backing Board: Plywood.
      a. Thickness: 7/16 inch, minimum.
   7. Panel Dimensions: 24 inches wide by 60 inches long, including nailing/fastening margins.
   8. Fastening Margins: 1 inch wide, covered by fabric covering.
   9. Mounting: Removable; Z-clips fixed to wall and to padding.
   10. Manufacturers:
      a. Grand Slam Safety, LLC; Wall Padding: www.grandslamsafety.com/#sle.
      b. Basis of Design: Draper, Inc; EcoVision Wall Pad: www.draperinc.com/#sle.
      c. Or Approved Equal.

2.5 VOLLEYBALL EQUIPMENT

A. Volleyball System shall be DRAPER Model 500001 PVS-01 Power Volleyball System by Draper, Inc. of Spiceland, IN.
   1. The 500001 PVS-01 shall consist of one standard with power winch and one standard with adjustable cable anchor collar. Post shall be telescoping type to meet all FIVB, USVBA, NCAA and NFSHSA requirements for competition. Post shall adjust from 6'1" (1.854 m) to 8'4" (2.540 m) in 1" (2.540 cm) increments to meet all age group height settings from
      a. elementary school use to international competition for both men and women. The 6' (1.890 cm) bottom upright shall be 3½" OD (8.890 cm) schedule 80 aluminum tube, with a wall thickness of .300" (.7620 cm). The bottom upright is provided with a special rubber foot to protect finished floors and to provide precise net height adjustment. The upper telescoping
      b. adjustable tube shall be 2-7/8" OD (7.303 cm) schedule 80 aluminum tube, with a wall thickness of .276" (.7010 cm) with a 4" (10.16 cm) diameter pulley and oilite bushing.
   2. The tensioning winch shall incorporate a heavy-duty, self-locking worm gear mechanism. Winch shall be furnished with a heavy 2" (5 cm) wide high tensile nylon strap with

heavy-duty snap hook to eliminate the possibility of hook breaking and guarantee safe connection to net top cable. The power winch is furnished complete with a folding handle for player

a. safety.

3. Systems shall come complete with DRAPER Model 500004 Power Volleyball Net by Draper, Inc. of Spiceland, IN. Net shall be 32' (9.75 M) long x 39-3/8" (1 M) high. Netting shall be high quality 4" square #36 black nylon cord with vinyl coated polyester hem double stitched around entire perimeter of net. Top hem of net shall be furnished with a 42'6" long x 1/8" diameter 2000 lb. minimum breaking strength galvanized aircraft cable with a nylon coating (3/16" OD) to protect against fraying. Ends of cable to have loops with heavy swaged type fittings for easy installation. Hems in end of net shall be furnished with a pocket for use with a 1/2" diameter fiberglass dowel rod. Ends of net shall have six 1" wide polypropylene tension straps with buckles for providing additional tightening of net. Bottom of net shall be furnished with a 1/4" diameter braided white nylon rope equipped with a spring loaded, pressure type rope tensioner.
4. System also to include Draper Model 500005 Rope Tensioner and DRAPER Model 500016 Combination Antenna and Boundary Marker.

B. Floor Plate, solid brass, flanged. Volleyball Cover Plate shall be DRAPER Model 501002 Brass Floor Plate by Draper, Inc. of Spiceland, IN.
1. Floor plate shall be solid brass alloy with permanently attached hinged cover. Outer ring shall have six mounting holes to allow cover plate to be attached to wood floor. Plate shall be installed flush with playing surface. Floor plate shall be 73/8" outside diameter by 3/8" thick. The diameter of opening shall be 4-1/4". Floor plate shall be supplied with six #10 x 1½" brass flat head wood screws for mounting plate to wood floor.

C. Floor Sleeve (One per cover plate required).
1. Floor Sleeves shall be DRAPER Model 501006 3-1/2" I.D. Floor Sleeve by Draper, Inc. of Spiceland, IN.
2. Floor sleeve shall be constructed of steel mechanical tubing with an inside diameter of 3-1/2", welded to a 4" x 4" bottom plate. Sleeve shall be 8-1/2" long and designed to be installed with the bottom at 9 ½" below the playing surface.

D. Protective Pads for Standards.
1. Volleyball Post Padding shall be DRAPER Model 5011XX Official Padding for 3-1/2" O.D. Volleyball Systems by Draper, Inc. of Spiceland, IN.
2. Pads shall be hinged at corners to fold neatly around posts and tensioning winch to provide maximum player protection. Pads shall be constructed of 11/2" thick polyethylene foam filler covered with polyester reinforced vinyl with three (3) hook and loop fastening straps for quick set-up and take-down, and shall be constructed to accommodate winch, or judges stand when used.
3. Pad color: 02 Marine Blue;

PART 3 EXECUTION

3.1 EXAMINATION

A. Take field measurements to ensure proper fitting of work. If taking field measurements before fabrication will delay work, allow for adjustments within recommended tolerances.

B. Inspect areas and conditions before installation, and notify Architect in writing of unsatisfactory or detrimental conditions.

C. Do not proceed with this work until conditions have been corrected; commencing installation constitutes acceptance of work site conditions.

D. Verify that electrical services are correctly located and have proper characteristics.

3.2 INSTALLATION

A. Install in accordance with Contract Documents and manufacturer's instructions.

B. Install equipment rigid, straight, plumb, and level.

C. Secure equipment with manufacturer's recommended anchoring devices.

D. Install wall padding securely, with edges tight to wall and without wrinkles in fabric covering.

E. Separate dissimilar metals to prevent electrolytic corrosion.

3.3 INSTALLATION GYMNASIUM DIVIDERS

A. Install equipment in accordance with manufacturer’s instructions.

B. Install equipment level, straight, accurate in accordance with the supplied drawings and at the correct locations specified.

C. Install equipment with supplied hardware, fittings, and components.

D. Take care to keep curtain fabric clean during install and not damage equipment or finish. Touch up finish if necessary.

E. For electrically operated equipment, install electrical power in accordance with Section 26, Electrical.

F. For electrically operated equipment, install control system such that the operation of the equipment can been seen in clear sight.

G. For installations made after wood gymnasium flooring is installed, provide protection and exercise care not to damage flooring

3.4 ADJUSTING

A. Verify proper placement of equipment.

B. Verify proper placement of equipment anchors and sleeves, and use actual movable equipment to be anchored if available.

C. Adjust operating equipment for proper operation; remove and replace equipment causing noise or vibration; lubricate equipment as recommended by manufacturer.

3.5 CLEANING

A. Remove masking or protective covering from finished surfaces.

B. Clean equipment in accordance with manufacturer's recommendations.

3.6 PROTECTION

A. Protect installed products until Date of Substantial Completion.

B. Replace damaged products before Date of Substantial Completion.

END OF SECTION

SECTION 116813 - PLAYGROUND EQUIPMENT

PART 1 GENERAL

1.1 SECTION INCLUDES:

A. Supply and install all playground equipment as shown on the drawings and as specified herein for new installations on new school projects, entire playground equipment replacement projects and partial maintenance component replacement including:
   1. Modular Playground Systems.
   2. Bicycle racks.

1.2 RELATED SECTIONS

A. Section 03 3000 - Cast In Place Concrete.

B. Section 32 1816 - Playground Protective Surfacing.

C. Section 32 1300 - Portland Cement, Concrete Paving

1.3 REFERENCE STANDARDS

A. ADA Standards - Americans with Disabilities Act (ADA) Standards for Accessible Design; 2010.

B. ASTM A123/A123M - Standard Specification for Zinc (Hot-Dip Galvanized) Coatings on Iron and Steel Products; 2017.

C. ASTM F1292 - Standard Specification for Impact Attenuation of Surfacing Materials Within the Use Zone of Playground Equipment; 2018, with Editorial Revision (2020).

D. ASTM F1487 - Standard Consumer Safety Performance Specification for Playground Equipment for Public Use; 2021.

E. CPSC Pub. No. 325 - Public Playground Safety Handbook; 2015.

1.4 PREINSTALLATION MEETINGS

A. Pre-installation Conference: Conduct conference at Project site.

1.5 SUBMITTALS

A. See Section 013300 - Submittal Requirements, for submittal procedures.

B. Product Data: Submit two (3) sets to the Project Manager.
   1. Submit technical product data, substantiating that products comply with the requirements.
   2. Provide equipment specification sheets for selected equipment for Owner submission to the Southern Nevada Health District.

C. Shop Drawings: Submit shop drawings showing fabrication and installation of playground equipment. Include details of construction, finish, reinforcements and connections. Show anchorage and accessory items.

D. Substitutes: Under provisions of Section 01 2500.

1.6 QUALITY ASSURANCE

A. Manufacturer Qualifications: Firm having minimum of 5 years documented experience in the manufacture of playground equipment.
   1. Provide references to five (5) specific installations in the last three (3) years.
   2. Manufacturer's Representative: Provide name, company name and address, and playground safety training certificate.

B. Installer Qualification: The installer must provide competent workmen trained and certified by the manufacturer. Certification is to be current within 3 years.

C. Only commercial grade equipment, in compliance with U.S. Consumer Product Safety Commission Publication 325, shall be installed in outdoor play areas.

1.7 DELIVERY, STORAGE AND HANDLING

A. Deliver cartooned or crated to provide protection during transit and storage.

B. Inspect equipment upon delivery for damage. Minor damages may be repaired provided refinished items are equal in all respects to new work and acceptable to the owner; otherwise, remove and replace damaged items as directed.

1.8 WARRANTY

A. Provide a minimum of five (5) year manufacturer's warranty for all equipment and component equipment for maintenance work.

1.9 MAINTENANCE MATERIALS

A. Provide the items listed below to the Owner through the Project Manager (for new installations only):
   1. One (1) unopened maintenance kit - including tools and standard hardware (bolts, rivets, and screws) for each playground unit installed.
   2. One (1) clamp for each modular unit installed.
   3. Service and repair information and parts list with model number and contact source.

PART 2 PRODUCTS

2.1 PLAYGROUND EQUIPMENT

A. Modular Playground Systems: The following are minimum parameters for modular playground systems for new installations, whole unit replacement and component replacements for maintenance work:
   1. Posts/Uprights
      a. Steel – Powder coated finish.
         1) Round – 4-1/2 in. diameter minimum, 11 ga. Minimum thickness.
         2) Minimum tensile strength – 45,000 psi.
         3) Minimum yield – 33,000 psi
      b. Aluminum – Powder coated finish.
         1) Round – 5 in. diameter minimum, 1/8 in. wall thickness minimum.
         2) Minimum tensile strength – 39,900 psi.
         3) Minimum yield – 36,500 psi

c. Powder coated with vandal proof end caps.

2. Decks/Platforms
   a. Punched Metal
      1) 9 ga. Minimum
      2) Vinyl coated.
      3) Square – 47-1/2" x 47-1/2" minimum
      4) Adequately braced for stability.
3. Steel Pipe Components
   a. Hand/Foot rungs - 1 in. to 1.67 in. diameter, wall thickness - 15 ga. Minimum
   b. Powder Coated.
4. Plastic Components
   a. UV stabilized low density polyethylene.
      1) Structural design and wall thickness sufficient to withstand heat, cold and normal abuse.
5. Hardware
   a. Shall be tamper-proof.
   b. Clamp/set-pin type for uprights - requiring special tools.
   c. Free from protrusions.
   d. Clevis type or D-ring hardware to attach free-swinging hand rings to overhead support. S-hooks are forbidden to be used in new installations, replacement and maintenance work and will not be accepted by the owner.
6. Installation/Layout and Design
   a. Pre-Kindergarten/Kindergarten structure
      1) Maximum deck height 48 in.
      2) Prefer slide to face north or east.
      3) ADA transfer deck to face school building.
      4) No substitution of components.
      5) Prototype layout may not be to scale for every manufacturer's equipment.
   b. Primary Structure
      1) Maximum deck height 72 in.
      2) Lead-on decks to horizontal ladder, S-ladder and ring trek not to exceed 12 in. in height from the safety surface.
      3) Prefer slide to face north or east.
      4) ADA transfer deck to face school building.
      5) Recommended height of horizontal ladder and ring trek from the top of the handgrip to the safety surface is 67 in.
      6) Recommended height of chin/turning bars is 48 in., 60 in., 72 in. from the top of hand rung to the safety surface.
      7) Spiral slide must exit safely away from the structure and components.
      8) Prototype layout may not be to scale for every manufacturer's equipment.
   c. Intermediate Structure
      1) Maximum deck height 72 in.
      2) Lead-on decks to horizontal ladder, S-ladder and ring trek not to exceed 12 in. in height from the safety surface.
      3) Prefer slide to face north or east.
      4) ADA transfer deck to face school building.

5) Recommended height of horizontal ladder and ring trek from the top of the handgrip to the safety surface is 77 in.
6) Recommended height of chin/turning bars is 48 in., 60 in., 72 in. from the top of hand rung to the safety surface.
7) Spiral slide must exit safely away from the structure and components.
8) Prototype layout may not be to scale for every manufacturer's equipment.

d. Combo Primary/Intermediate Structure
1) Maximum deck height 72 in.
2) Lead-on decks to horizontal ladder, S-ladder and ring trek not to exceed 12 in. in height from the safety surface.
3) Prefer slide to face north or east.
4) ADA transfer deck to face school building.
5) Recommended height of horizontal ladder and ring trek from the top of the handgrip to the safety surface is 67 in. (primary)/77 in. (intermediate).
6) Recommended height of chin/turning bars is 48 in., 60 in., 72 in. from the top of hand rung to the safety surface.
7) Spiral slide must exit safely away from the structure and components.
8) Prototype layout may not be to scale for every manufacturer's equipment.

7. Non-Approved Equipment:
a. No clatter bridges - Only fixed bridges on all playgrounds.
b. No steering wheels - on all playgrounds.
c. No segmented slides - Only one piece slides for all playgrounds.
d. No net climbers on all playgrounds.
e. No spiral slides on Kindergarten playgrounds.
f. No power locks on guard rails and barricades on all playgrounds.

8. Safety
a. A minimum fall zone around the play structure of 6 ft. shall be provided. A minimum of 12 ft. clear non-encroachment zone (including the 6 ft. fall zone) shall be provided around all play structures.
b. Safety surfacing must be provided under and around all modular play equipment. Accessibility under the current edition of ANSI A117. 1-2003 (current edition) and the ADA is required for all accessible routes to and around play equipment.
c. All materials and installations shall be structurally sound, suitable for safe play and in accordance with Consumer Products Safety Commission Guidelines and the current edition of ASTM standard F1487.
d. Manufacturer's proof of product liability insurance must be provided for all installations.
e. Manufacturer's standard guarantee against all defects of materials for all installations.
f. Safety surface area is dimensioned based on the minimum equipment dimensions on the drawings for new installations. In all cases, the Manufacturer of playground equipment shall verify that its equipment will fit within the safety surface area providing the fall and non-encroachment zones.

9. The following are approved manufacturers of modular playground equipment systems, but not limited to:
a. Basis of Design: BCI Burke:
1) Series: Basic, Intensity, Nucleus Evolution.
b. Playmaker – Play World Systems
c. Kid Builders – Little Tikes

d. Playbooster – Landscape Structures
e. Powerscape – Gametime
f. Miracle Kids Choice – Modular Playground System
g. Play & Park Structures - Supermax

B. Bicycle rack. Shall have capacity for minimum of 20 bicycles, loading from both sides. Heavy duty braced construction. Structural members minimum 1-5/8 in. OD galvanized steel tubing, welded to the frame top and bottom. All malleable castings and steel clamp fittings hot dipped galvanized steel. Racks shall have the capability to be anchored. All end pieces shall have welded end caps. Overall length approximately 10 ft. Heavy weight, (approximately 200 lbs.) to preclude easy moving by students. Five (5) racks per school.
1. American Playground R-10
2. Ultra Play systems 5110-S
3. Or - approved equal.

PART 3 EXECUTION

3.1 MEASUREMENTS

A. Verify all dimensions shown on the drawings, assessing existing equipment dimensions for replacement by taking field measurements; proper fit and attachment of all parts is required.

3.2 INSPECTION

A. Inspect conditions prior to installation and notify the Project Manager in writing of any conditions that would prevent satisfactory installation. Failure to do so will make the contractor responsible for any corrections as directed.

B. The Project Manager shall arrange with Inspectors to perform scheduled progress inspections of new installations, replacement equipment work and maintenance work.

C. Inspector shall perform a successful audit prior to the acceptance of new installations, whole replacement of equipment work.

D. Health District shall inspect new installations, whole and partial replacement equipment work.

3.3 INSTALLATION

A. For new installation: each item of equipment shall be in accordance with the respective manufacturer's recommendations and details and shall be anchored to footings or foundations as shown on all drawings prior to the installation of the safety surface.

B. For whole replacement of equipment: each item of equipment shall be anchored per the manufacturer's recommendations to existing footings or foundations. Demolish existing uprights or posts and prepare footings and foundations for the installation of the new equipment.

C. Install all work plumb and true. Provide all anchorage requirements and provide galvanized anchors, plates, angles, channels, fastenings, and any other supporting item or members necessary to fully support the work without damaging or staining surfaces to which the work is fastened. Any surfaces structurally weakened or otherwise damaged by the work of this section shall be fully repaired or replaced at no cost to the owner. Ensure use zone compliance around and under play equipment in the play area.

D. Tops of concrete foundations, pads or footings used in the installation of playground equipment shall be formed and poured flush with the subgrade upon which the concrete is laid.

3.4 ADJUST AND CLEAN

A. Touch up: Immediately after installation, sand smooth any rusted or damaged area.

B. Final Adjustments: Check and readjust equipment prior to final inspection, leaving equipment undamaged and in complete and proper operating condition.

C. Clean all surfaces prior to completion.

END OF SECTION

SECTION 122400 - WINDOW SHADES - MECHOSHADE SYSTEMS

PART 2 PRODUCTS

1.1 MANUFACTURERS

A. Basis of Design: MechoShade Systems LLC; www.mechoshade.com/#sle.

1.2 ROLLER SHADES

A. General:
   1. Provide shade system components that are capable of being removed or adjusted without removing mounted shade brackets or cassette support channel.
   2. Provide shade system that operates smoothly when shades are raised or lowered.

END OF SECTION

Project Specification Manual

City of Fernley
Community Response & Resource Center

50% Construction Document Submittal
Volume 2

Issue Date: March 21, 2023



Ms. Daphne Hooper, City Manager
City of Fernley, Nevada
595 Silverlace Blvd.
P. 775-784-9858
E. dhooper@cityoffernley.org

225 S Arlington, Suite A | Reno, NV 89501 | Ph: 775.857.2949

SECTION 000110 - SPECIFICATION INDEX

PROCUREMENT AND CONTRACTING REQUIREMENTS

DIVISION 00 -- PROCUREMENT AND CONTRACTING REQUIREMENTS

000101 - Project Title Page

000102 - Project Information

000107 - Seals Page - Not Included in this Submittal

000110 - Specification Index

007200 - General Conditions

TECHNICAL SPECIFICATIONS

DIVISION 01 -- GENERAL REQUIREMENTS

011000 - Summary

012300 - Alternates

012500 - Substitution Procedures

012600 - Contract Modification Procedures

012613 - Request for Information

013000 - Administrative Requirements

013300 - Submittal Requirements

013216 - Construction Progress Schedule

014000 - Quality Requirements

014100 - Regulatory Requirements

015000 - Temporary Facilities and Controls

016000 - Product Requirements

017300 - Execution Requirements

017419 - Construction Waste Management and Disposal

017510 - Electrical Systems Commissioning

017800 - Closeout Submittals and Procedures

017836 - Warranties and Bonds

017900 - Demonstration and Training

019113 - General Commissioning Requirements

DIVISION 02 -- EXISTING CONDITIONS

For Site Preparation and Earthwork, see Division 31

For Pavements and Site Improvements, see Division 32

For Site Utilities, see Division 33

024126 - Selective Electrical Demolition

DIVISION 03 -- CONCRETE

033000 - Cast-in-Place Concrete

033511 - Concrete Floor Finishes

DIVISION 04 -- MASONRY

042000 - Unit Masonry

DIVISION 05 -- METALS

051200 - Structural Steel Framing

052100 - Steel Joist Framing

053100 - Steel Decking

054000 - Cold-Formed Metal Framing

055000 - Metal Fabrications

055133 - Metal Ladders

055213 - Pipe and Tube Railings

DIVISION 06 -- WOOD, PLASTICS, AND COMPOSITES

061000 - Rough Carpentry

061053 - Miscellaneous Rough Carpentry

062000 - Finish Carpentry

064100 - Architectural Casework

066116 - Solid Surfacing Fabrications

066400 - Fiber Reinforced Plastic (FRP) Paneling

066410 - Fiber Reinforced Laminate Panels (FRL)

DIVISION 07 -- THERMAL AND MOISTURE PROTECTION

071300 - Sheet Waterproofing

072100 - Building Insulation

072500 - Weather Barriers

074113 - Metal Roof Panels

074213 - Metal Wall Panels

075419 - Polyvinyl-Chloride Roofing

076200 - Sheet Metal Flashing and Trim

077113 - Premanufactured Metal Coping and Edge Systems

077200 - Roof Accessories

078400 - Firestopping

079200 - Joint Sealants

DIVISION 08 -- OPENINGS

081113 - Hollow Metal Doors and Frames

081416 - Flush Wood Doors

083100 - Access Doors and Panels

084313 - Aluminum-Framed Entrances and Storefronts

084413 - Glazed Aluminum Curtain Walls

087100 - Door Hardware

088000 - Glazing

DIVISION 09 -- FINISHES

090561 - Common Work Results for Flooring Preparation

092116 - Gypsum Board Assemblies

092216 - Non-Structural Metal Framing

093000 - Tiling

095100 - Acoustical Ceilings

096500 - Resilient Flooring, Wall Base and Accessories

096566 - Resilient Athletic Flooring

096723 - Resinous Flooring Systems

096813 - Tile Carpeting

097213 - Digital Printed Vinyl Wallcovering

099000 - Painting and Coating

099600 - Anti-Graffiti Coatings

DIVISION 10 -- SPECIALTIES

101100 - Visual Display Units

101124 - Tackable Wall Systems

101400 - Signage

102113.17 - Phenolic Toilet Compartments

102601 - Wall and Corner Guards

102800 - Toilet Room Accessories

104300 - Emergency Aid Specialties

104400 - Fire Protection Specialties

107500 - Flagpoles

DIVISION 11 -- EQUIPMENT

114000 - Foodservice Equipment

116623 - Gymnasium Equipment

116813 - Playground Equipment

DIVISION 12 -- FURNISHINGS

122400 - Window Shades

12 9300 - Site Furnishings

DIVISION 13 -- SPECIAL CONSTRUCTION (NOT USED)

DIVISION 14 -- CONVEYING EQUIPMENT (NOT USED)

DIVISION 21 -- FIRE SUPPRESSION

210000 - Fire Suppression Systems

210530 - Hangers and Supports for Fire Suppression Systems

210540 - Seismic Bracing for Fire Suppression Systems

DIVISION 22 -- PLUMBING

220000 - Plumbing

220500 - Basic Materials and Methods for Plumbing

220520 - Operation and Maintenance of Plumbing Systems

220530 - Hangers and Supports for Plumbing Systems

220540 - Seismic Bracing for Plumbing Systems

220700 - Plumbing Insulation

220800 - Testing, Adjusting, and Balancing of Plumbing Systems

220900 - Plumbing Fixtures and Trim

221000 - Facility Water Distribution

221300 - Facility Sanitary Sewerage

221400 - Facility Storm Drainage

221500 - Facility Natural Gas Systems

223400 - Gas Fired Domestic Water Heaters

DIVISION 23 -- HEATING, VENTILATING, AND AIR-CONDITIONING (HVAC)

230000 - Heating, Ventilating, and Air Conditioning

230500 - Basic Materials and Methods for HVAC

230520 - Operation and Maintenance of HVAC Systems

230530 - Hangers and Supports for HVAC Systems

230540 - Seismic Bracing for HVAC Systems

230700 - HVAC Insulation

230800 - Testing, Adjusting, and Balancing of HVAC Systems

231600 - Facility Natural Gas Systems

233100 - HVAC Ductwork

233110 - HVAC Ductwork Accessories

233120 - Exterior Ductwork

233400 - HVAC Fans and Hoods

233700 - Air Outlets and Inlets

238300 - Rooftop Packaged Gas-Electric Unit (3-10 Tons)

238600 - Split System Air Conditioning Systems

238900 - Electric Heaters

DIVISION 26 -- ELECTRICAL

260001 - Electrical General Provisions

260002 - Electrical Submittals

260003 - Temporary Electrical Facilities for Construction

260503 - Equipmment Wiring Connections

260519 - Low-Voltage Electrical Power Conductors and Cables

260526 - Grounding and Bonding for Electrical Systems

260529 - Hangers and Supports for Electrical Systems

260530 - Seismic Protection

260533 - Raceway and Boxes for Electrical Systems

260553 - Electrical Identification

260573 - Overcurrent Protection Device Coordination Study

260923 - Lighting Control Devices

262200 - Low-Voltage Transformers

262413 - Switchboards

262416 - Panelboards

262716 - Electrical Cabinets and Enclosures

262726 - Wiring Devices

262813 - Fuses

262819 - Enclosed Switches

262916 - Enclosed Contactors

263323 - Central Lighting Inverter System

263556 - Surge Protective Devices

263600 - Manual Transfer Switches

265100 - Interior Lighting

265600 - Exterior Lighting

266000 - Electrical Systems Testing

DIVISION 27 -- COMMUNICATIONS

270500 – Basic Telecommunications Requirements

270526 – Grounding and Bonding for Communications Systems

270528 – Pathways for Communications Systems

270544 – Sleeves and Sleeve Seals for Communications Pathways and Cabling

271000 – Structured Cable Systems

271100 – Communications Equipment Room Fittings

271116 – Communications Cabinets and Racks

271300 – Communications Backbone Cabling

271500 – Communications Horizontal Cabling

271700 – Broadband Television Distribution System

272101 – Public Wireless LAN (WIFI)

274116 – Audio Video Systems

DIVISION 28 -- ELECTRONIC SAFETY AND SECURITY

281300 - Access Control

281333 - Lockdown - Lockout Systems

281600 - Intrusion Detection

282000 - Video Surveillance

283100 - Fire Detection and Alarm

DIVISION 31 -- EARTHWORK

311000 - Site Clearing

312200 - Earth Moving

313000 - Excavation, Backfilling, and Compacting

314000 – Graded Crushed Aggregate Base Course

DIVISION 32 -- EXTERIOR IMPROVEMENTS

320190 - Landscape Maintenance

321216 - Asphalt Paving

321313 - Concrete Items

321373 – Concrete Paving Joint Sealants

321540 - Decomposed Granite Pavement

321816.13 - Playground Safety Surface

323113 - Chain Link Fences and Gates

324200 - Precast Storm Concrete Items

328400 - Planting Irrigation

329113 - Landscape Soil Preparation

329300 - Planting

DIVISION 33 -- UTILITIES

331130 – Facility Water Distribution

334100 - Storm and Sewer Utility Drainage Pipe

DIVISION 34 -- TRANSPORTATION

DIVISION 40 -- PROCESS INTEGRATION

DIVISION 46 -- WATER AND WASTEWATER EQUIPMENT

466121 - Pressure Filters

APPENEDICIES

Appendix A - Foodservice Cut Sheets

Appendix B - Geotechnical Investigation

Appendix C - Door Hardware Cut Sheets

END OF SECTION

SECTION 210000 - FIRE SUPPRESSION SYSTEMS

PART 1 GENERAL

1.1 CONDITIONS OF THE CONTRACT

A. The Conditions of the Contract (General, Supplementary, and other Conditions) are hereby made a part of this Section.

B. This section lists general requirements for fire suppression systems work and is hereby made a part of each Division 21 specification section

C. For convenience or reference the Specifications are separated into Divisions and Sections. Such separations shall not operate to make the Engineer an arbitrator to establish subcontract limits between the Prime Contractor and his Subcontractors. In any case, the Prime Contractor is responsible to the Owner for a complete project.

D. Wherever the word 'provide' is utilized with regard to materials or equipment on the drawings or in the specifications it shall be interpreted to mean 'furnish and install'.

1.2 WORK INCLUDED

A. Furnish all labor, materials, tools, and equipment necessary to complete the automatic fire sprinkler system as hereinafter described, ready for service, to the entire satisfaction of the Architect/Engineer.
   1. Areas requiring freeze protection shall be served by dry pipe systems as indicated on the drawings. Air compressor horsepower requirements shall be determined by the Contractor and coordinated with other trades as appropriate.
   2. Provide hydraulically calculated systems for light and ordinary hazard occupancy as noted in NFPA 13.
   3. Provide calculations based on a minimum 10% safety factor.
   4. At the Contractor's option, the sprinkler system may be designed based on the pipe schedule requirements listed in NFPA 13.

B. Determine the static and residual pressure for the site as required for accurate determination of system requirements. Base system calculations on the lowest expected static and residual pressure for the area.

C. It is the intent of these specifications and the drawings to provide for a complete and operating automatic fire protection sprinkler system in full compliance with the standards of the National Fire Protection Association as set forth in NFPA Pamphlet No. 13. The work must also be in accordance with all local or state requirements which apply.

D. Provide fire sprinklers to protect all building overhangs greater than 4 feet wide, or as required by the local authority.

1.3 JOB CONDITIONS

A. Coordinate work of this section with that of other sections to ensure that work will be carried out in an orderly fashion.

B. Coordinate with other trades all equipment locations, pipe, duct and conduit runs, electrical outlets and fixtures, air diffusers, and structural and architectural features.

1.4 QUALITY ASSURANCE

A. Firms regularly engaged in manufacture of fire protection products, of types, materials, and sizes required, whose products have been in satisfactory use in similar service for not less than 5 years.

B. Requirements of Regulatory Agencies:
   1. NFPA Compliance: Install fire protection systems in accordance with the following standards: NFPA 13 (Standard for the Installation of Sprinkler Systems) and NFPA 24 (Private Fire Service Mains).
   2. UL Compliance: Provide fire protection products in accordance with UL standards; provide UL label on each product.
   3. All piping used in the project shall be both UL listed and FM approved.
   4. Fire Department/Fire Marshal Compliance: Install fire protection systems in accordance with the regulations of the local fire department and of the State Fire Marshal.

C. The automatic sprinkler system shall conform in every regard to the requirements of the International Building Code.

D. Installation of the sprinkler system shall not be started until complete plans and specifications (including water supply information and type of existing sprinkler system) have been reviewed by the authority having jurisdiction.

E. The fire suppression sprinkler system shall be installed by a licensed fire systems contractor, licensed by the State Fire Marshal's Office. Plans for such systems shall be submitted to the State Fire Marshal's office for review and approval prior to commencing installation.

1.5 SUBMITTALS

A. Reflected Ceiling Plans: Provide drawings showing location of all sprinkler heads throughout the building or project area and their relationship to all other materials forming part of the ceiling system. No fire sprinkler piping shall be shown on these drawings. Submit drawings to the Architect/Engineer prior to any other work. The Contractor shall make allowance in his bid for preparation and submittal of sprinkler location drawings in all areas. Prepare these drawings prior to the preparation of the engineered drawings required herein. Superimpose these drawings upon the reflected ceiling plans and show ceiling module, light fixtures, air inlets and outlets, and tile pattern where applicable.

B. Adjustments by the Architect/Engineer in these head locations are to be anticipated by the Contractor and shall be allowed for in bidding. No extra compensation will be allowed for spacing of sprinklers closer than the maximum area of coverage allowed by NFPA 13 where it is necessary to suit the ceiling module and lighting layout.

C. Drawings: Prepare and submit drawings to the Architect/Engineer for review. Drawings shall include product data for fire protection systems indicating pipe sizes, pipe locations, fittings, shutoffs, equipment, etc. Submit reviewed copies to the agency having jurisdiction, with the Engineer's stamp shown on each drawing before proceeding with the installation.

D. Calculations: Prepare hydraulic calculations for each fire protection system. Submit reviewed copies to the Architect/Engineer for review bearing the stamp and/or signature of the agency having jurisdiction, before proceeding with installation.

E. Product Data: Submit manufacturer's technical product data for fire protection materials and products as part of submittal to the Architect/Engineer.

F. Record Drawings: At project closeout, submit record drawings of the installed fire protection piping and products in accordance with all associated requirements.

G. Operation and Maintenance Data: Submit operation and maintenance data and parts lists for all fire protection materials and products. Include this data, product data, drawings, calculations, certificate of installation, and record drawings in the maintenance manual in accordance with all associated requirements.

H. Certificate of Installation: Submit certificate upon completion of fire protection piping work which indicates that work has been tested in accordance with NFPA 13 and that system is operational, complete, and has no defects.

PART 2 MATERIALS

2.1 GENERAL

A. Provide piping materials and factory-fabricated piping products of sizes, types, pressure rating, temperature ratings, and capacities as indicated. Where not indicated, provide proper selection as determined by Contractor to comply with installation requirements. Provide sizes and types matching piping and equipment connections; provide fittings of materials which match pipe materials used in fire protection systems. Where more than one type of materials or product is indicated, selection is the Contractor's option.

B. Equipment to be furnished under this specification shall be essentially standard product of manufacturer. Where two or more units of same class of equipment are required, these units shall be products of a single manufacturer. Component parts of the system need not be products of the same manufacturer.

2.2 BASIC IDENTIFICATION

A. Provide identification complying with Specification Section 230500 (Basic Materials and Methods for HVAC) in accordance with the following listing:
   1. Fire Protection Valves: Brass valve tags.
   2. Fire Protection Signs: Provide the following signs:
      a. At each sprinkler valve, including roof manifold, sign indicating what portion of system valve controls.
      b. At each outside alarm device, sign indicating what authority to call if device is activated.

2.3 BASIC PIPING AND PIPE FITTINGS

A. General: Provide piping and pipe fittings complying with Specification Section 230500 (Basic Materials and Methods for HVAC), Section 232100 (Hydronic Piping and Accessories), and in accordance with the following listing:

B. Pipe:
   1. Below ground piping shall be ductile iron, complying with Federal Specification WW-P-421D.
   2. At the Contractor's option, piping more than 2 feet from the building may be Polyvinyl Chloride (PVC) water pipe, Class 200, DR14, cast iron or ductile iron fittings, with Ring-Tite joints. Pipe shall be listed under AWWA C900.

3. Above ground piping shall be Schedule 40 black steel pipe, in accordance with ASTM A135 and A53. At the Contractor's option, above ground piping may be Schedule 10 black steel, in accordance with ASTM A135.

C. Pipe Fittings:
   1. Below ground fittings shall be Ames series IBR in building riser, one piece 90 degree fitting fabricated of 304 stainless steel tubing. For use with cast iron pipe, American Water Works Association Standard Specification C100, Class D, 150 pounds; or listed as approved by Underwriters' Laboratories, Inc., list of Inspected Fire Protection Equipment and Materials or approved by any other appropriate, nationally recognized testing laboratory for use in sprinkler system.
   2. Above ground fittings shall be Federal Specification WW-P-501, Type I, Class A piping.

2.4 BASIC PIPING SPECIALTIES

A. Provide piping specialties complying with Section 220500 (Basic Materials and Methods for Plumbing) and in accordance with the following listing:
   1. Pipe Escutcheons
   2. Dielectric Unions
   3. Pipe Sleeves
   4. Sleeve Seals

2.5 FLEXIBLE CONNECTIONS

A. At the contractor’s option, flexible braided hose connections may be utilized for connection to fire sprinkler heads. Flexible connections shall be installed in strict accordance with the product listing and with the manufacturer’s installation instructions. Flexible connections shall be Tyco Fastflex Model FB, or approved equal.

B. Available Manufacturers: Subject to compliance with requirements, manufacturers offering valves which may be incorporated in the work include the following:
   1. Tyco Fastflex
   2. Viking Flexhead
   3. Victaulic VicFlex

2.6 BASIC SUPPORTS AND ANCHORS

A. Provide supports and anchors complying with Section 210530 (Hangers and Supports for Fire Suppression Systems) and in compliance with NFPA 13.

2.7 BASIC VALVES

A. Provide valves complying with Section 220500 (Basic Materials and Methods for Plumbing) and in accordance with the following listing:
   1. Interior Valves
      a. Sectional: Gate valves or butterfly valves, UL listed.
      b. Check: Swing check valves, UL listed.

2.8 SPECIAL VALVES

A. Provide valves, UL listed, in accordance with the following listing. Provide sizes and types which mate and match piping and equipment connections.

1. Alarm Check Valve: Provide cast iron water flow alarm check valve, 175 psi working pressure.
2. Hose Outlet Valves: Provide angle hose valves, 2-1/2 inch size where not otherwise indicated. Hose threads shall match the requirements of the local authority having jurisdiction. Provide bronze cap and chain at each valve location.

B. Available Manufacturers: Subject to compliance with requirements, manufacturers offering valves which may be incorporated in the work include the following:
1. Tyco Fire Products
2. Potter Roemer
3. Guardian Fire Equipment
4. Stockham Valves and Fittings

2.9 BASIC METERS AND GAUGES

A. Provide meters and Specification Section 230500 (Basic Materials and Methods for HVAC). Pressure gauges shall be 0-250 psi range.

2.10 DOUBLE CHECK VALVE BACKFLOW PREVENTERS

A. Provide double check valve assembly consisting of two spring loaded brass check valves, two cast iron bronze fitted OS&Y gate valves and four test cocks, Febco Model LF856, or approved equal. Construct in accordance with AWWA Standard C510.
1. Provide meter assembly and piping required to allow the unit to be used as a double detector check valve assembly.
2. Backflow preventer shall be located inside the building. See drawings for location.

2.11 FIRE PROTECTION SPECIALTIES

A. Provide fire protection specialties, UL listed, in accordance with the following listing. Provide sizes and types which match piping and equipment connections.
1. Install drains on main risers and auxiliary drains at all low points in the system.
2. One inspector's test drain shall be installed for each sprinkler system.
3. Drains and inspector's tests shall be at locations approved by the Architect.
4. Provide drain line to floor sink or to outside, as required, to suit Project conditions.
5. Five or fewer trapped heads will not require a drain valve but may be drained through a plugged fitting.
6. Drain valve shall be of the angle type. Install in accordance with the requirements of NFPA 13.
7. Pipe drain valves to a floor sink or to the outside of the building. Discharge shall be visible from sight drain fitting or open-end drain pipe. Provide flushing connections at ends of all cross mains.

B. Flow Alarm: Furnish and install a flow alarm system for each main sprinkler riser as shown on the drawings. The systems shall be complete with an Anvil VSR-F, or equal, flow switch, a UL approved 10 inch bell and a marked switch box with lock and wiring. The Contractor shall be responsible for wiring between switch, bell, and junction box. Provide junction box under Division 26. Wiring shall meet the requirements of Division 26. All controls shall be identified by permanent metal tags or other approved means. Alarm switch shall be UL or FM approved and shall have adjustable retard mechanism and two sets of contacts. Wiring between electrical distribution panel and junction box will be provided under Division 26.

C. Supervisory Switch: Fit the control valves on the fire sprinkler risers with monitor switch, Potter Electric Model OSYSU-1, or approved equal, with single pole, double throw switch actuator installed to change switch position when the OS&Y valve is being closed.

D. Available Manufacturers: Subject to compliance with requirements, manufacturers offering fire protection specialties which may be incorporated in the work include the following:
   1. Tyco Fire Products
   2. Potter Electric
   3. Potter Roemer
   4. Guardian Fire Equipment

2.12 AUTOMATIC SPRINKLERS

A. Provide automatic sprinklers in accordance with the following listing. Provide 3mm glass bulb type quick response sprinklers with a temperature rating of 155°F, unless otherwise indicated.

B. Type: Spray pattern type, automatic closed type heads of ordinary degree temperature rating, except that sprinklers to be installed in the vicinity of heating equipment shall be of temperature ratings required for such locations by NFPA.

C. Type of Sprinklers:
   1. Exposed Locations: Provide upright type heads at all areas with no finished ceilings, equal to Tyco Sprinkler Series TY-FRB quick response, upright, 5.6 K-factor, with 1/2” orifice.
      a. Where heads are located less than 8 feet above finished floor, or where heads are located in a gymnasium area, provide wire guards to protect heads from damage.
   2. Concealed Locations: Provide upright-type heads or pendent type heads equal to Tyco Sprinkler Series TY-FRB quick response, 5.6 K-factor, with 1/2” orifice.
   3. Sidewall Locations: Where required and where approved by the Architect/Engineer provide Tyco Sprinkler Series TY-FRB quick response, horizontal sidewall, 5.6 K-factor, with 1/2” orifice.
   4. Finished Ceilings: Provide at all ceilings with lay-in acoustical tile and at plaster or gypsum board type ceilings Tyco Sprinkler Series RF-II concealed pendent sprinkler, 5.6 K-factor, with 1/2” orifice, and white cover plate.
   5. Sprinkler Cabinet and Wrench: Furnish steel, baked red enameled, sprinkler box with capacity to store sprinklers and wrench sized to sprinklers. Spare sprinklers and wrenches called for under ‘Extra Stock’.

D. Available Manufacturers: Subject to compliance with requirements, manufacturer offering automatic sprinklers which may be incorporated in the work include the following:
   1. Tyco Sprinkler Company

2.13 SIAMESE CONNECTIONS

A. Provide exterior wall mount type cast brass siamese connections and escutcheon plate assembly, with fire department inlets with hose connections as required by local fire authority. Provide 6 inch rough chrome plated inlet and body equipped with individual drop clapper valves, brass plugs and chains, and constructed with the following additional construction features:
   1. Finish: Polished Chrome Plated, or as determined by Architect/Engineer.
   2. Cast Lettering: ‘AUTO SPKR’.
   3. Escutcheon: As required to suit the number and size of inlets.

4. Provide a check valve in the piping between the Siamese connection and the fire protection system. Where indicated on the drawings, provide a wafer style check valve, above grade in the riser to the siamese connection. Provide a ball drip above grade, on the siamese side of the check valve.

B. Available Manufacturers: Subject to compliance with requirements manufacturers offering siamese connections which may be incorporated in the work include the following:
   1. Potter Roemer
   2. Fire End & Croker Corporation
   3. Elkhart Brass Manufacturing

2.14 PIPE SLEEVES

A. Where pipes pass through a concrete floor slab the pipe shall be covered with high density fiberglass insulation. Pipe insulation shall be 1/2" to 1" thick Johns Manville Microlok HP or Johns Manville Trymer 25-50 for the full thickness of the concrete. After the piping has been installed and the concrete has been poured, the fiberglass insulation shall be cut away or compressed leaving a 1/2" deep space that shall then be filled with a high quality silicone sealant resulting in a flat, water-tight installation.

B. Where pipes pass through fire rated concrete floors or walls install a Schedule 10 galvanized metal sleeve providing between a 1/2 inch and 1 inch clearance around the sides of the pipe and/or pipe insulation for the full thickness of the concrete. After the piping has been installed, fill the annular space in accordance with the applicable UL fire rating system.

C. Available Manufacturers: Subject to compliance with requirements, manufacturers offering pipe sleeves which may be incorporated in the work include the following, or approved equal:
   1. 3M

PART 3 EXECUTION

3.1 LOCATION OF EQUIPMENT AND VALVES

A. Provide fire department connection at main entry to building or where indicated on the drawings.

B. Provide zone valves and sprinkler systems at all floors and for the following areas:

3.2 INSPECTION

A. Examine areas and conditions under which fire sprinklers are to be installed. Do not proceed with work until unsatisfactory conditions have been corrected in manner acceptable to the Contractor.

3.3 INSTALLATION OF SPRINKLERS IN FINISHED CEILINGS

A. Where heads are located in grid or tile ceilings with regular pattern, heads shall be in center of tile or grid measured in both directions.

3.4 STRUCTURAL DESIGN OF EQUIPMENT AND SEISMIC RESTRAINTS

A. GENERAL
   1. Seismic bracing for mechanical systems (equipment, ductwork, piping, and conduit) shall comply with all applicable requirements of the International Building Code (IBC) including all applicable provisions of the American Society of Civil Engineers (ASCE) Minimum Design

Loads for Buildings and Other Structures (ASCE Standard 7-16). Basic seismic design criteria for each project shall be as listed on the structural drawings for that project.

2. Compliance with the applicable seismic bracing requirements shall be accomplished utilizing the most current version of one of the following design manuals (no exceptions):
   a. International Seismic Application Technology (ISAT) Design Manual
   b. Mason Industries Seismic Restraint Design Manual
   c. Kinetics Noise Control Seismic Design Manual
3. A complete bound copy of the applicable design manual shall be provided to the Owner at the beginning of the construction period for use/reference during the course of the project.
4. Component Importance Factors (Ip) for all mechanical equipment, ductwork, piping, and conduit shall be determined and assigned in accordance with ASCE Standard 7-16 Section 13.1.3.

3.5 CLEARANCE

A. Clearance through walls and floors shall adhere to 2016 NFPA 13 Section 9.3.4 (Clearance).

3.6 EXTRA STOCK

A. Spare Heads: For each style and temperature range required, furnish additional sprinkler heads, amounting to one unit for every 100 installed units but not less than 10 heads, in proportion to the total number of each style of head.

B. Wrenches: Furnish two sprinkler wrenches for each type and size of sprinkler connection.

C. Obtain receipt from the Owner that the extra stock has been received.

3.7 FIELD QUALITY CONTROL

A. Sprinkler Piping Flushing: Prior to connecting sprinkler risers for flushing, flush water feed mains, lead-in connections, and control portions of sprinkler piping. After fire sprinkler piping installation has been completed and before piping is placed in service, flush entire sprinkler system as required to remove foreign substances under pressure as specified in NFPA 13. Continue flushing until water is clear, and check to ensure that debris has not clogged sprinklers.

B. Hydrostatic Testing: After flushing system, test fire sprinkler piping hydrostatically for period of 2 hours at not less than 200 psi or at 50 psi greater than system pressure where pressure is anticipated to be in excess of 150 psi. Check system for leakage of joints. Measure hydrostatic pressure at low point of each system or zone being tested.

C. Repair or replace piping system as required to eliminate leakage in accordance with NFPA standards for ‘little or no leakage’ and re-test as specified to demonstrate compliance.

3.8 OPERATION TEST

A. Test each piece of equipment to show that it will operate in accordance with the indicated requirements.

3.9 CARE AND CLEANING:

A. Repair or replace broken, damaged, or otherwise defective parts, materials, and work. Leave entire work in condition satisfactory to the Arc hitect/Engineer. At completion, carefully clean and adjust equipment and trim that are installed as part of this work. Leave systems and equipment in satisfactory operating condition.

3.10 CLEANING UP

A. Upon completion of the Work remove materials, equipment, apparatus, tools, and the like, and leave the premises clean, neat, and orderly.

END OF SECTION

SECTION 210530 - HANGERS AND SUPPORTS FOR FIRE SUPPRESSION

PART 1 GENERAL

1.1 CONDITIONS OF THE CONTRACT

A. Section 210000 (Fire Suppression Systems) and Section 210540 (Seismic Bracing for Fire Suppression Systems) are hereby made a part of this section.

1.2 GENERAL

A. The following information is for pipe hanger and support layout and design reference only. The actual design of all hangers, supports, and seismic bracing is the responsibility of the Contractor per the following specification sections:
   1. Specification Section 21 05 30 (Hangers and Supports for Fire Suppression Systems)
   2. Specification Section 21 05 40 (Seismic Bracing for Fire Suppression Systems)

B. Fire Sprinkler Piping: Hangers and supports for fire sprinkler piping shall be designed in accordance with the latest adopted edition of NFPA Standard 13 Chapter 17 (Hangers and Supports).

Steel Piping	Maximum Spacing	Reference
1-1/4” and smaller	12 feet	NFPA 13 Table 17.4.2.1
1-1/2”	15 feet	NFPA 13 Table 17.4.2.1
2” thru 8”	15 feet	NFPA 13 Table 17.4.2.1
Lightwall Steel Piping	Maximum Spacing	Reference
3” and smaller	12 feet	NFPA 13 Table 17.4.2.1

1.3 SUMMARY

A. Section Includes:
   1. Metal pipe hangers and supports
   2. Thermal hanger shield inserts
   3. Fastener systems
   4. Pipe stands
   5. Equipment stands
   6. Equipment supports

B. Related Requirements: All hangers and support systems shall be designed, selected, and installed by the Contractor to comply with the requirements listed in Section 210540 (Seismic Bracing for Fire Suppression Systems).

C. Costs for hanger, support, and seismic bracing systems complying with the requirements listed herein are the responsibility of the Contractor and shall be included in the Contractor’s bid. No extra cost will be allowed for failure to include the associated costs in the Contractor’s bid.

1.4 SUBMITTALS

A. Product Data: For each type of product.

B. Shop Drawings: Signed and sealed by a qualified professional engineer. Show fabrication and installation details and include calculations for the following (Include product data for all components):
   1. Trapeze Pipe Hangers

2. Metal Framing (Strut) Systems
3. Pipe Stands
4. Equipment Supports

C. Delegated Design Submittal: Provide a delegated design submittal for trapeze hangers indicated to comply with all performance requirements and design criteria, including analysis data signed and sealed by the qualified professional engineer responsible for their preparation.
   1. Details for fabrication and assembly of trapeze hangers.
   2. Design calculations utilized for designing the trapeze hangers.

D. The work of this section shall be coordinated with the requirements for the Contractor furnished seismic design submittal for hangers and supports specified in Section 210540 (Seismic Bracing for Fire Suppression Piping and Equipment). Design and detailing of seismic bracing, hangers, and supports is the responsibility of the Contractor.

1.5 QUALITY ASSURANCE

A. Structural Steel Welding Qualifications: Qualify procedures and personnel according to AWS D1.1/D1.1M, 'Structural Welding Code - Steel.'

B. Pipe Welding Qualifications: Qualify procedures and operators according to ASME Boiler and Pressure Vessel Code, Section IX.

PART 2 PRODUCTS

2.1 PERFORMANCE REQUIREMENTS

A. Delegated Design: Engage a qualified professional engineer, to design trapeze pipe hangers and equipment supports.

B. Structural Performance: Hangers and supports for fire suppression piping and equipment shall withstand the effects of gravity loads and stresses within limits and under conditions indicated according to ASCE Standard 7-16.
   1. Design supports for multiple pipes, including pipe stands, capable of supporting combined weight of supported systems, system contents, and test water.
   2. Design equipment supports capable of supporting combined operating weight of supported equipment and connected systems and components.
   3. Design seismic restraint hangers and supports for piping and equipment.

2.2 METAL PIPE HANGERS AND SUPPORTS

A. Carbon Steel Pipe Hangers and Supports:
   1. Description: MSS SP-58, Types 1 through 58, factory fabricated components.
   2. Galvanized Metallic Coatings: Pre-galvanized, hot dip galvanized, or electro-galvanized.
   3. Non-Metallic Coatings: Plastic coated or epoxy powder coated.
   4. Padded Hangers: Hanger with fiberglass or other pipe insulation pad or cushion to support the bearing surface of the piping.
   5. Hanger Rods: Continuous thread rod, nuts, and washers made of carbon steel.

B. Stainless Steel Pipe Hangers and Supports:
   1. Description: MSS SP-58, Types 1 through 58, factory fabricated components.

2. Padded Hangers: Hanger with fiberglass or other pipe insulation pad or cushion to support bearing surface of piping.
3. Hanger Rods: Continuous thread rod, nuts, and washers made of carbon steel.

C. Copper Pipe and Tube Hangers:
1. Description: MSS SP-58, Types 1 through 58, copper plated steel, factory fabricated components.
2. Hanger Rods: Continuous thread rod, nuts, and washers made of carbon steel.

2.3 TRAPEZE PIPE HANGERS

A. Description: MSS SP-58, Type 59, shop or field fabricated pipe support assembly made from structural carbon steel shapes with MSS SP-58 carbon steel hanger rods, nuts, saddles, and U-bolts.

2.4 METAL FRAMING (STRUT) SYSTEMS

A. Metal Framing Manufacturers Association (MFMA) Metal Framing Systems:
1. Manufacturers: Subject to compliance with requirements, available manufacturers offering products that may be incorporated into the Work include the following:
a. B-line
b. Unistrut
c. Flex-Strut
d. G-Strut
e. Miro Industries
2. Description: Shop or field fabricated, pipe support assembly made of steel channels, accessories, fittings, and other components for supporting multiple parallel pipes.
3. Standard: Comply with MFMA-4 factory fabricated components for field assembly.
4. Channels: Continuous slotted carbon steel channel with in-turned lips.
5. Channel Width: Selected for applicable load criteria.
6. Channel Nuts: Formed or stamped nuts or other devices designed to fit into channel slot and, when tightened, prevent slipping along channel.
7. Hanger Rods: Continuous thread rod, nuts, and washers made of carbon steel.
8. Metallic Coating: Zinc dichromate finish applied over an electro-galvanized zinc plating.

2.5 THERMAL HANGER SHIELD INSERTS

A. Manufacturers: Subject to compliance with requirements, available manufacturers offering products that may be incorporated into the Work include the following:
1. Pipe Shields
2. nVent/Caddy
3. Buckaroos
4. Carpenter & Paterson
5. Piping Technology & Products
6. Rilco Manufacturing
7. Value Engineered Products

B. Insulation Insert Material for Cold Piping: ASTM C552, Type II cellular glass with 100 psi or ASTM C591, Type VI, Grade 1 polyisocyanurate with 125 psi minimum compressive strength and vapor barrier.

C. Insulation Insert Material for Hot Piping: Water repellent treated, ASTM C533, Type I calcium silicate with 100 psi ASTM C552, Type II cellular glass with 100 psi or ASTM C591, Type VI, Grade 1 polyisocyanurate with 125 psi minimum compressive strength.

D. For Trapeze or Clamped Systems: Insert and shield shall cover entire circumference of pipe.

E. For Clevis or Band Hangers: Insert and shield shall cover lower 180 degrees of pipe.

F. Insert Length: Extend 2 inches beyond sheet metal shield for piping operating below ambient air temperature.

2.6 FASTENER SYSTEMS

A. Powder Actuated Fasteners: Threaded steel stud, for use in hardened portland cement concrete with pull-out, tension, and shear capacities appropriate for supported loads and building materials where used.
   1. Manufacturers: Subject to compliance with requirements, available manufacturers offering products that may be incorporated into the Work include the following:
      a. Hilti
      b. ITW Ramset/Red Head
      c. MKT Fastening
      d. Simpson Strong-Tie

B. Mechanical Expansion Anchors: Insert wedge type anchors for use in hardened portland cement concrete; with pull-out, tension, and shear capacities appropriate for supported loads and building materials where used.
   1. Indoor Applications: Zinc-coated stainless steel.
   2. Outdoor Applications: Stainless steel.
   3. Manufacturers: Subject to compliance with requirements, available manufacturers offering products that may be incorporated into the Work include the following:
      a. Hilti
      b. ITW Ramset/Red Head
      c. MKT Fastening
      d. B-line

2.7 PIPE STANDS

A. General Requirements for Pipe Stands: Shop or field fabricated assemblies made of manufactured corrosion resistant components to support roof mounted piping.

B. Compact Pipe Stand Manufacturers:
   1. Subject to compliance with requirements, available manufacturers offering products that may be incorporated into the Work include, but are not limited to, the following:
      a. Miro Industries
      b. PHP Systems/Design
      c. RectorSeal HVAC
      d. Rooftop Support Systems
   2. Description: Single base unit with integral rod roller, pipe clamps, or V-shaped cradle to support pipe, for roof installation without membrane penetration.
   3. Base: Single, vulcanized rubber, molded polypropylene, or polycarbonate.
   4. Hardware: Galvanized steel or polycarbonate.

5. Accessories: Protection pads.

C. Low Profile, Single Base, Single Pipe Stand:
   1. Manufacturers: Subject to compliance with requirements, available manufacturers offering products that may be incorporated into the Work include, but are not limited to, the following:
      a. Miro Industries
      b. PHP Systems/Design
      c. Rooftop Support Systems
   2. Description: Single base with vertical and horizontal members, and pipe support, for roof installation without membrane protection.
   3. Base: Single, vulcanized rubber, molded polypropylene, or polycarbonate.
   4. Vertical Members: Two, galvanized stainless steel, continuous thread 1/2 inch rods.
   5. Horizontal Member: Adjustable horizontal, galvanized or stainless steel pipe support channels.
   6. Pipe Supports: Roller strut clamps, clevis hanger, or swivel hanger.
   7. Hardware: Galvanized stainless steel.
   8. Accessories: Protection pads.
   9. Height: 12 inches above roof Insert lesser dimension above roof.

D. High Profile, Single Base, Single Pipe Stand:
   1. Manufacturers: Subject to compliance with requirements, available manufacturers offering products that may be incorporated into the Work include, but are not limited to, the following:
      a. Miro Industries
      b. PHP Systems/Design
      c. Rooftop Support Systems
   2. Description: Single base, vertical and horizontal members, and pipe support, for roof installation without membrane penetration.
   3. Base: Single vulcanized rubber or molded polypropylene.
   4. Vertical Members: Two, galvanized stainless steel, continuous thread 1/2 inch rods.
   5. Horizontal Member: One, adjustable height, galvanized stainless steel pipe support slotted channel or plate.
   6. Pipe Supports: Roller strut clamps, clevis hanger, swivel hanger.
   7. Hardware: Galvanized stainless steel.
   8. Accessories: Protection pads, 1/2 inch continuous thread galvanized steel rod, 1/2 inch continuous thread stainless steel rod.
   9. Height: 36 inches above roof Insert lesser dimension above roof.

E. High Profile, Multiple Pipe Stand:
   1. Manufacturers: Subject to compliance with requirements, available manufacturers offering products that may be incorporated into the Work include, but are not limited to, the following:
      a. Miro Industries
      b. PHP Systems/Design
      c. RectorSeal HVAC
      d. Rooftop Support Systems
   2. Description: Assembly of bases, vertical and horizontal members, and pipe supports, for roof installation without membrane penetration.

3. Bases: Two or more; vulcanized rubber molded polypropylene insert material.
4. Vertical Members: Two or more, galvanized stainless steel channels.
5. Horizontal Members: One or more, adjustable height, galvanized stainless steel pipe supports.
6. Pipe Supports: Roller strut clamps, clevis hanger, swivel hanger.
7. Hardware: Galvanized stainless steel.
8. Accessories: Protection pads, 1/2 inch continuous thread rod.
9. Height: 24 inches above the roof or as indicated on the drawings.

F. Curb Mounted Type Pipe Stands: Shop or field fabricated pipe supports made from structural steel shapes, continuous thread rods, and rollers, for mounting on permanent stationary roof curb.

2.8 EQUIPMENT SUPPORTS

A. Description: Welded, shop or field fabricated equipment support made from structural carbon steel shapes.

2.9 GENERAL MATERIALS

A. Aluminum: ASTM B221.

B. Carbon Steel: ASTM A1011/A1011M.

C. Structural Steel: ASTM A36/A36M, carbon steel plates, shapes, and bars; galvanized.

D. Stainless Steel: ASTM A240/A240M.

E. Threaded Rods: Continuously threaded. Zinc plated or galvanized steel for indoor applications and stainless steel for outdoor applications. Mating nuts and washers of similar materials as rods.

F. Grout: ASTM C1107/C1107M, factory mixed and packaged, dry, hydraulic cement, non-shrink and non-metallic grout; suitable for interior and exterior applications.
1. Properties: Non-staining, non-corrosive, and non-gaseous.
2. Design Mix: 5,000 psi, 28 day compressive strength.

2.10 HANGER AND SUPPORT MATERIALS

A. Comply with MSS SP-58 for pipe hanger selections and applications that are not specified in piping system sections.

B. Use hangers and supports with galvanized metallic coatings for piping and equipment that will not have field applied finish.

C. Use nonmetallic coatings on attachments for electrolytic protection where attachments are in direct contact with copper tubing.

D. Use carbon steel pipe hangers and supports metal trapeze pipe hangers and metal framing systems and attachments for general service applications.

E. Use copper plated pipe hangers and copper or stainless steel attachments for copper piping and tubing.

F. Use padded hangers for piping that is subject to scratching.

G. Use thermal hanger shield inserts for insulated piping and tubing.

H. Horizontal Piping Hangers and Supports: Unless otherwise indicated, and except as specified in piping system sections, install the following types:
   1. Adjustable, Steel Clevis Hangers (MSS Type 1): For suspension of non-insulated or insulated, stationary pipes 1/2" thru 30" size.
   2. Yoke Type Pipe Clamps (MSS Type 2): For suspension of up to 1050°F, pipes 4" thru 24" size, requiring up to 4 inches of insulation.
   3. Carbon or Alloy Steel, Double Bolt Pipe Clamps (MSS Type 3): For suspension of pipes 3/4" thru 36" size, requiring clamp flexibility and up to 4 inches of insulation.
   4. Steel Pipe Clamps (MSS Type 4): For suspension of cold and hot pipes 1/2" thru 24 if little or no insulation is required.
   5. Pipe Hangers (MSS Type 5): For suspension of pipes 1/2" thru 4, to allow off center closure for hanger installation before pipe erection.
   6. Adjustable Swivel Split or Solid Ring Hangers (MSS Type 6): For suspension of non-insulated, stationary pipes 3/4" thru 8.
   7. Adjustable, Steel Band Hangers (MSS Type 7): For suspension of non-insulated, stationary pipes 1/2" thru 8.
   8. Adjustable Band Hangers (MSS Type 9): For suspension of non-insulated, stationary pipes 1/2" thru 8.
   9. Adjustable, Swivel Ring Band Hangers (MSS Type 10): For suspension of non-insulated, stationary pipes 1/2" thru 8.
   10. Split Pipe Ring with or without Turnbuckle Hangers (MSS Type 11): For suspension of non-insulated, stationary pipes 3/8" thru 8.
   11. Extension Hinged or Two Bolt Split Pipe Clamps (MSS Type 12): For suspension of non-insulated, stationary pipes 3/8" thru 3.
   12. U-Bolts (MSS Type 24): For support of heavy pipes 1/2" thru 30.
   13. Clips (MSS Type 26): For support of insulated pipes not subject to expansion or contraction.
   14. Pipe Saddle Supports (MSS Type 36): For support of pipes 4" thru 36, with steel pipe base stanchion support and cast iron floor flange or carbon steel plate.
   15. Pipe Stanchion Saddles (MSS Type 37): For support of pipes 4" thru 36, with steel pipe base stanchion support and cast iron floor flange or carbon steel plate, and with U-bolt to retain pipe.
   16. Adjustable Pipe Saddle Supports (MSS Type 38): For stanchion type support for pipes 2-1/2" thru 3 if vertical adjustment is required, with steel pipe base stanchion support and cast iron floor flange.
   17. Single Pipe Rolls (MSS Type 41): For suspension of pipes 1" thru 3 , from two rods if longitudinal movement caused by expansion and contraction might occur.
   18. Adjustable Roller Hangers (MSS Type 43): For suspension of pipes 2-1/2" thru 24, from single rod if horizontal movement caused by expansion and contraction might occur.
   19. Complete Pipe Rolls (MSS Type 44): For support of pipes 2" thru 42 if longitudinal movement caused by expansion and contraction might occur but vertical adjustment is unnecessary.
   20. Pipe Roll and Plate Units (MSS Type 45): For support of pipes 2" thru 24 if small horizontal movement caused by expansion and contraction might occur and vertical adjustment is unnecessary.
   21. Adjustable Pipe Roll and Base Units (MSS Type 46): For support of pipes 2" thru 30 if vertical and lateral adjustment during installation might be required in addition to expansion and contraction.

I. Vertical Piping Clamps: Unless otherwise indicated and except as specified in piping system Sections, install the following types:
   1. Extension Pipe or Riser Clamps (MSS Type 8): For support of pipe risers 3/4" thru 24.
   2. Carbon or Alloy Steel Riser Clamps (MSS Type 42): For support of pipe risers 3/4" thru 24 if longer ends are required for riser clamps.

J. Hanger Rod Attachments: Unless otherwise indicated and except as specified in piping system Sections, install the following types:
   1. Steel Turnbuckles (MSS Type 13): For adjustment up to 6 inches for heavy loads.
   2. Steel Clevises (MSS Type 14): For 120 to 450°F piping installations.
   3. Swivel Turnbuckles (MSS Type 15): For use with MSS Type 11, split pipe rings.
   4. Malleable Iron Sockets (MSS Type 16): For attaching hanger rods to various types of building attachments.
   5. Steel Weldless Eye Nuts (MSS Type 17): For 120 to 450°F piping installations.

K. Building Attachments: Unless otherwise indicated and except as specified in piping system Sections, install the following types:
   1. Steel or Malleable Concrete Inserts (MSS Type 18): For upper attachment to suspend pipe hangers from concrete ceiling.
   2. Top Beam C-Clamps (MSS Type 19): For use under roof installations with bar-joist construction, to attach to top flange of structural shape.
   3. Side Beam or Channel Clamps (MSS Type 20): For attaching to bottom flange of beams, channels, or angles.
   4. Center Beam Clamps (MSS Type 21): For attaching to center of bottom flange of beams.
   5. Welded Beam Attachments (MSS Type 22): For attaching to bottom of beams if loads are considerable and rod sizes are large.
   6. C-Clamps (MSS Type 23): For structural shapes.
   7. Top-Beam Clamps (MSS Type 25): For top of beams if hanger rod is required tangent to flange edge.
   8. Side Beam Clamps (MSS Type 27): For bottom of steel I-beams.
   9. Steel Beam Clamps with Eye Nuts (MSS Type 28): For attaching to bottom of steel I-beams for heavy loads.
   10. Linked-Steel Clamps with Eye Nuts (MSS Type 29): For attaching to bottom of steel I-beams for heavy loads, with link extensions.
   11. Malleable Beam Clamps with Extension Pieces (MSS Type 30): For attaching to structural steel.
   12. Welded Steel Brackets: For support of pipes from below or for suspending from above by using clip and rod. Use one of the following for indicated loads:
      a. Light (MSS Type 31): 750 lb.
      b. Medium (MSS Type 32): 1500 lb.
      c. Heavy (MSS Type 33): 3000 lb.
   13. Side Beam Brackets (MSS Type 34): For sides of steel or wooden beams.
   14. Plate Lugs (MSS Type 57): For attaching to steel beams if flexibility at beam is required.
   15. Horizontal Travelers (MSS Type 58): For supporting piping systems subject to linear horizontal movement where headroom is limited.

L. Saddles and Shields: Unless otherwise indicated and except as specified in piping system Sections, install the following types:

1. Steel Pipe Covering Protection Saddles (MSS Type 39): To fill interior voids with insulation that matches adjoining insulation.
2. Protection Shields (MSS Type 40): Of length recommended in writing by manufacturer to prevent crushing insulation.
3. Thermal Hanger Shield Inserts: For supporting insulated pipe.

M. Spring Hangers and Supports: Unless otherwise indicated and except as specified in piping system Sections, install the following types:
1. Restraint Control Devices (MSS Type 47): Where indicated to control piping movement.
2. Spring Cushions (MSS Type 48): For light loads if vertical movement does not exceed 1-1/4 inches.
3. Spring Cushion Roll Hangers (MSS Type 49): For equipping Type 41, roll hanger with springs.
4. Spring Sway Braces (MSS Type 50): To retard sway, shock, vibration, or thermal expansion in piping systems.
5. Variable Spring Hangers (MSS Type 51): Preset to indicated load and limit variability factor to 25 percent to allow expansion and contraction of piping system from hanger.
6. Variable Spring Base Supports (MSS Type 52): Preset to indicated load and limit variability factor to 25 percent to allow expansion and contraction of piping system from base support.
7. Variable Spring Trapeze Hangers (MSS Type 53): Preset to indicated load and limit variability factor to 25 percent to allow expansion and contraction of piping system from trapeze support.
8. Constant Supports: For critical piping stress and if necessary, to avoid transfer of stress from one support to another support, critical terminal, or connected equipment. Include auxiliary stops for erection, hydrostatic test, and load adjustment capability. These supports include the following types:
   a. Horizontal (MSS Type 54): Mounted horizontally.
   b. Vertical (MSS Type 55): Mounted vertically.
   c. Trapeze (MSS Type 56): Two vertical type supports and one trapeze member.

N. Comply with MSS SP-58 for trapeze pipe hanger selections and applications that are not specified in piping system Sections.

O. Comply with MFMA-103 for metal framing system selections and applications that are not specified in piping system Sections.

P. Use powder actuated fasteners and mechanical expansion anchors instead of building attachments where required in concrete construction.

PART 3 EXECUTION

3.1 APPLICATION

A. Comply with all requirements in other section of the specifications for firestopping materials and installation for penetrations through fire rated walls, ceilings, and assemblies.
1. Strength of Support Assemblies: Where not indicated, select sizes of components so strength will be adequate to carry present and future static loads within specified loading limits. Minimum static design load used for strength determination shall be weight of supported components plus 200 lb

3.2 HANGER AND SUPPORT INSTALLATION

A. Metal Pipe Hanger Installation: Comply with MSS SP-58. Install hangers, supports, clamps, and attachments as required to properly support piping from the building structure.

B. Metal Trapeze Pipe Hanger Installation: Comply with MSS SP-58. Arrange for grouping of parallel runs of horizontal piping, and support together on field fabricated trapeze pipe hangers.
   1. Pipes of Various Sizes: Support together and space trapezes for smallest pipe size or install intermediate supports for smaller diameter pipes as specified for individual pipe hangers.
   2. Field fabricate from ASTM A36/A36M, carbon-steel shapes selected for loads being supported. Weld steel according to AWS D1.1/D1.1M.

C. Thermal Hanger Shield Installation: Install in pipe hanger or shield for insulated piping.

D. Fastener System Installation:
   1. Install powder actuated fasteners for use in lightweight concrete or concrete slabs less than 4 inches thick in concrete after concrete is placed and completely cured. Use operators that are licensed by powder actuated tool manufacturer. Install fasteners according to powder actuated tool manufacturer's operating manual.
   2. Install mechanical expansion anchors in concrete after concrete is placed and completely cured. Install fasteners according to manufacturer's written instructions.

E. Pipe Stand Installation:
   1. Pipe Stand Types Except Curb Mounted Type: Assemble components and mount on smooth roof surface. Do not penetrate the roof membrane.
   2. Curb Mounted Type Pipe Stands: Assemble components or fabricate pipe stands and mounts on a permanent, stationary roof curb.

F. Install hangers and supports complete with necessary attachments, inserts, bolts, rods, nuts, washers, and other accessories.

G. Equipment Support Installation: Fabricate from welded structural steel shapes.

H. Install hangers and supports to allow controlled thermal and seismic movement of piping systems, to permit freedom of movement between pipe anchors, and to facilitate action of expansion joints, expansion loops, expansion bends, and similar units.

I. Install lateral bracing with pipe hangers and supports to prevent swaying.

J. Install building attachments within concrete slabs or attach to structural steel. Install additional attachments at concentrated loads, including valves, flanges, and strainers, 2-1/2and larger and at changes in direction of piping. Install concrete inserts before concrete is placed; fasten inserts to forms and install reinforcing bars through openings at top of inserts.

K. Load Distribution: Install hangers and supports so that piping live and dead loads and stresses from movement will not be transmitted to connected equipment.

L. Pipe Slopes: Install hangers and supports to provide indicated pipe slopes and to not exceed maximum pipe deflections allowed by ASME B31.9 for building services piping.

M. Insulated Piping:
   1. Attach clamps and spacers to piping.
      a. Piping Operating above Ambient Air Temperature: Clamp may project through insulation.

   b. Piping Operating below Ambient Air Temperature: Use thermal hanger shield insert with clamp sized to match OD of insert.
   c. Do not exceed pipe stress limits allowed by ASME B31.9 for building services piping.
2. Install MSS SP-58, Type 39, protection saddles if insulation without vapor barrier is indicated. Fill interior voids with insulation that matches adjoining insulation.
   a. Option: Thermal-hanger shield inserts may be used. Include steel weight distribution plate for pipe NPS 4 and larger if pipe is installed on rollers.
3. Install MSS SP-58, Type 40, protective shields on cold piping with vapor barrier. Shields shall span an arc of 180 degrees.
   a. Option: Thermal hanger shield inserts may be used. Include steel weight distribution plate for pipe NPS 4 and larger if pipe is installed on rollers.
4. Shield Dimensions for Pipe: Not less than the following:
   a. 1/2" to 3-1/2: 12 inches long and 0.048 inch thick.
   b. 4: 12 inches long and 0.06 inch thick.
   c. 4: 18 inches long and 0.06 inch thick.
   d. 8" thru 14" pipe: 24 inches long and 0.075 inch thick.
   e. 16" thru 24" pipe: 24 inches long and 0.105 inch thick.
5. Pipes 8"and Larger: Include wood or reinforced calcium silicate insulation inserts of length at least as long as protective shield.
6. Thermal Hanger Shields: Install with insulation same thickness as piping insulation.

3.3 METAL FABRICATIONS

A. Cut, drill, and fit miscellaneous metal fabrications for trapeze pipe hangers and equipment supports.

B. Fit exposed connections together to form hairline joints. Field weld connections that cannot be shop welded because of shipping size limitations.

C. Field Welding: Comply with AWS D1.1/D1.1M procedures for shielded, metal arc welding; appearance and quality of welds; and methods used in correcting welding work; and with the following:
   1. Use materials and methods that minimize distortion and develop strength and corrosion resistance of base metals.
   2. Obtain fusion without undercut or overlap.
   3. Remove welding flux immediately.
   4. Finish welds at exposed connections so no roughness shows after finishing and so contours of welded surfaces match adjacent contours.

3.4 EQUIPMENT SUPPORTS

A. Fabricate structural steel stands to suspend equipment from structure overhead or to support equipment above floor.

B. Grouting: Place grout under supports for equipment and make bearing surface smooth.

C. Provide lateral bracing to prevent swaying for equipment supports.

3.5 ADJUSTING

A. Hanger Adjustments: Adjust hangers to distribute loads equally on attachments and to achieve indicated slope of pipe.

B. Trim excess length of continuous thread hanger and support rods to 1-1/2 inches.

3.6 PAINTING

A. Touchup: Clean field welds and abraded areas of shop paint. Paint exposed areas immediately after erecting hangers and supports. Use same materials as used for shop painting. Comply with SSPC-PA 1 requirements for touching up field painted surfaces.
   1. Apply paint by brush or spray to provide a minimum dry film thickness of 2.0 mils.

B. Galvanized Surfaces: Clean welds, bolted connections, and abraded areas and apply galvanizing repair paint to comply with ASTM A780/A780M.

END OF SECTION

SECTION 210540 - SEISMIC BRACING FOR FIRE SUPPRESSION SYSTEMS

PART 1 GENERAL

1.1 CONDITIONS OF THE CONTRACT

A. Section 210000 (Fire Suppression Systems) and Section 210530 (Hangers and Supports for Fire Suppression Systems) are hereby made a part of this section.

1.2 GENERAL

A. Seismic bracing for fire suppression systems (equipment, piping, and conduit) shall comply with all applicable requirements of the latest adopted edition of the International Building Code (IBC) including all applicable provisions of the latest adopted edition of the American Society of Civil Engineers (ASCE) Minimum Design Loads for Buildings and Other Structures (ASCE Standard 7-16). Basic seismic design criteria for each project shall be as listed on the structural drawings for that project.

B. The anchorage calculations shall show compliance with the latest adopted edition of the American Concrete Institute (ACI) Standards, Handbooks, and Manuals where anchoring to concrete for the project-specific loads and conditions, including project specific calculations for anchors, clips, and fasteners.

C. Compliance with the applicable seismic bracing requirements for equipment, piping, and conduit shall be accomplished utilizing the most current version of one of the following design manuals, or approved equal.
   1. International Seismic Application Technology (ISAT) Design Manual
   2. Mason Industries Seismic Restraint Design Manual
   3. Vibro-Acoustics Seismic Design Manual

D. Component Importance Factors (Ip) for all equipment, ductwork, piping, and conduit shall be determined and assigned in accordance with ASCE Standard 7-16 Section 13.1.3.

E. Design and detailing of seismic bracing, hangers, and supports for equipment, piping, and conduit is the responsibility of the Contractor.

F. The work of this section shall be coordinated with the requirements for the Contractor furnished delegated design submittal for hangers and supports specified in Section 210530 (Hangers and Supports for Fire Suppression Systems). Design and detailing of seismic bracing, hangers, and supports is the responsibility of the Contractor.

1.3 SUBMITTALS

A. The Contractor shall provide the required number of seismic shop drawing submittal sets for review and approval by the Engineer. Submittals shall include a comprehensive set of shop drawings clearly depicting the seismic bracing requirements for all equipment, piping, and conduit. Any piping or conduit that does not require seismic bracing shall be specifically identified in the submittal, and the reason for exemption shall be provided. Cite any and all references for the exemption. In cases where seismic bracing is not required due to the supported items being less than 12 inches below the supporting structure, a single note may be provided to cover those locations.

B. Submittals shall be fully coordinated with the structural drawings and shall include all applicable structural attachment details. Seismic bracing shop drawings shall include all vertical support anchorage loads and all seismic bracing anchorage loads. Each specific load shall be indicated and the structural element that the support is attached to shall be clearly depicted/identified. Seismic bracing submittals shall be stamped and signed by a structural or civil engineer with current registration licensed in the State of Nevada (or licensed in the state where the project is located, if the project is located outside the State of Nevada).

C. Seismic shop drawing submittals will be reviewed by both the design mechanical engineer and the design structural engineer.

1.4 SITE VISITS (QUALITY CONTROL)

A. An authorized representative of the seismic bracing system manufacturer shall visit the job site during the construction period to confirm that the seismic bracing installation complies with the shop drawings, with all applicable code requirements, and with the seismic bracing system manufacturer's written installation requirements and associated details. As a minimum, an authorized representative shall visit the site when the seismic bracing installation is complete (and prior to installation of the ceilings).

B. A written report shall be issued within one week the site visit summarizing the observations made during the site visit and listing all required corrective actions and/or deficiencies. The report shall be made available to both the design mechanical engineer and the design structural engineer.

C. After all equipment installation is complete and all seismic bracing has been verified, the authorized representative that conducted the field verification shall issue a letter certifying that the installation is complete and that the installation complies with the specified requirements

D. Site visits shall be coordinated with the Owner and shall be scheduled in writing a minimum of one week prior to the proposed site visit date.

PART 2 PRODUCTS - NOT APPLICABLE

PART 3 EXECUTION - NOT APPLICABLE

END OF SECTION

SECTION 220000 - PLUMBING

PART 1 GENERAL

1.1 CONDITIONS OF THE CONTRACT

A. The Conditions of the Contract (General, Supplementary, and other Conditions) and Section 220500 (Basic Materials and Methods for Plumbing) are hereby made a part of this section.

B. This section lists general requirements for plumbing work and is hereby made a part of each Division 22 specification section.

C. For convenience or reference the Specifications are separated into Divisions and Sections. Such separations shall not operate to make the Engineer an arbitrator to establish subcontract limits between the Prime Contractor and his Subcontractors. In any case, the Prime Contractor is responsible to the owner for a complete project.

D. Wherever the word 'provide' is utilized with regard to materials or equipment on the drawings or in the specifications it shall be interpreted to mean 'furnish and install'.

E. The term 'exposed' shall be interpreted to mean any equipment, ductwork, or piping that is not concealed above a continuous ceiling or inside a finished wall.

1.2 WORK INCLUDED

A. This section consists of general requirements and standard specifications covering certain parts of the plumbing work and is supplemented by other Division 22 specification sections covering additional work, requirements, and materials specifically applicable to the plumbing work of each section. Requirements of subsequent sections of the specifications, if in conflict with these general requirements, shall govern.

1.3 REQUIREMENTS OF REGULATORY AGENCIES

A. Provide work and materials in full accordance with the latest rules and regulations of the following:
   1. 2018 International Building Code
   2. 2018 Uniform Mechanical Code
   3. 2018 Uniform Plumbing Code
   4. 2017 National Electrical Code
   5. 2018 International Fire Code
   6. 2018 International Energy Conservation Code
   7. 2018 NFPA Codes and Standards
   8. Nevada State Fire Marshal
   9. Nevada Occupational Safety and Health
   10. Underwriters Laboratories
   11. All other applicable state codes, rules, and regulations

B. Nothing in the drawings or specifications shall be construed to permit work not conforming to these codes.

C. When the Contract Documents differ from governing codes, furnish and install the larger size or higher standards called for at no additional cost to the Owner.

1.4 FEES, PERMITS, AND UTILITY SERVICES

A. Obtain and pay for all permits and service required for installation of this work; arrange for required inspections and secure approvals from the authorities having jurisdiction.

B. Arrange for utility connections and coordinate work with utility company.

C. Arrange required inspections and secure approvals from the authorities having jurisdiction.

1.5 SITE EXAMINATION

A. Examine site, verify dimensions and locations against drawings, and inform self of conditions under which work is to be done before submitting proposal. No allowance will be made for extra expense on account of error.

B. Information shown relative to existing services is based upon available records and data but is approximate only. Make minor deviations found necessary to conform with actual locations and conditions without extra cost. Verify location and elevation of utilities prior to commencement of excavation for new piping or its installation.

1.6 PLACEMENT OF EQUIPMENT AND WORK

A. The placement of equipment and mechanical work in the locations and spaces shown on the drawings is the Contractor's responsibility.

B. Move equipment and/or work into spaces through openings provided or located in the spaces during construction, as required.

C. Perform disassembling and reassembling of equipment or other work necessary to accomplish this requirement without extra cost to the Owner.

1.7 SUBMITTALS AND SUBSTITUTIONS

A. Refer to Section 013300 - Submittal Requirements for submittal procedures.

B. Submit to the Architect/Engineer for review, within a reasonable time after award of Contract and in ample time to avoid delay of construction, shop drawings or submittals on all items of equipment and materials, including all substitutions. Substitutions will be interpreted to be all manufacturers other than those specifically listed by model or catalog number. Also see Division 1 for additional related requirements.

C. Partial or incomplete sets of equipment and materials submittals will not be acceptable.

D. Only one request for substitution will be considered on each item of equipment or material. No substitutions will be considered thereafter.

E. Quantities are the Contractor’s responsibility and will not be reviewed.

F. All submittal data shall be tailored to suit the specific project, with appropriate model or part numbers, materials, sizes, options, and accessories clearly indicated for each different submittal item and on each submittal page. Submittal pages without this information will be returned and will need to be resubmitted with all of the required information indicated on each sheet.

G. The Contractor shall certify that he has examined all submittal data and that the equipment and materials submitted for review meet or exceed the requirements of the drawings and specifications. Submittals without the required certification will not be acceptable.

H. Electronic Formatted Submittals
   1. Provide submittals in electronic form (.pdf file format).
   2. Identify and incorporate submitted information as follows:
      a. Provide complete submittal package including cover sheet with:
         1) Project Name
         2) Submittal Package Number (with Revision Number identified)
         3) Date
         4) Name and Address of Architect/Engineer
         5) Name of Contractor
         6) Name of Subcontractor
      b. Group submitted items by specification section and provide:
         1) Index of submitted products with page numbers
         2) Name of Firm or entity that prepared submittal
         3) Name of Supplier
         4) Name of Manufacturer
         5) Equipment and/or fixture tag, if applicable
         6) Number and title of appropriate specification section
   3. Items indicated by the Architect/Engineer to be resubmitted shall be resubmitted as follows:
      a. Retain items marked as 'No Exceptions Taken' or 'Make Corrections Noted' and resubmit with the revised package. Do not provide new sheets for these items.
      b. Provide revised submittal sheets for all other reviewed items.
         1) Provide originally submitted sheet with Architect/Engineer comments.
         2) Clearly indicate amendments and modifications made in response to previous submittal review comments.

I. If the Contractor desires to make a substitution, he shall submit complete information or catalog data to show equality of equipment or material offered to that specified. No substitutions will be allowed unless requested and reviewed in writing. The Architect/Engineer will review and take appropriate action on shop drawings, product data, samples, and other submittals as required by the contract documents. Such review shall be only for general conformance with the design concept and general compliance with the information given in the contract documents. The review shall not include review of quantities, dimensions, weights or gauges, fabrication processes, construction methods, coordination with the work of other trades, or construction safety precautions, all of which are the sole responsibility of the Contractor. Review of a specific item shall not indicate acceptance of an assembly of which the item is a component. The Architect/Engineer shall not be required to review and shall not be responsible for any deviations from the Contract Documents not clearly noted by the Contractor, nor shall the Architect/Engineer be required to review partial submissions or those for which submissions for correlated items have not been received. The Architect/Engineer reserves the right to require the originally specified item.

J. Installation of reviewed substitutions is the Contractor's responsibility. Any changes required for installation of reviewed substituted equipment must be made without additional cost to the

Owner. Review by the Architect/Engineer of the substituted equipment and/or the dimensioned drawings does not waive the requirements stated herein.

1.8 AS-BUILT DRAWINGS

A. Upon completion of work submit to the Architect/Engineer as-built drawings showing all changes in equipment, piping, ductwork, etc. installed as part of this project which are not in accordance with the contract drawings. As-built drawing deliverables shall be in accordance with the requirements of Division 1, and shall consist of the following as a minimum:
   1. Provide as-built drawings in electronic file format (pdf file). In addition to the electronic file, when field mark-ups have been utilized, provide a complete set of full size neatly and legibly marked as-built drawings on 20 pound white bond paper.
   2. As-built drawings shall be full size (same size as the contract documents) and shall be standard engineering scale. The minimum drawing scale shall match those provided in the contract documents.
   3. As-built drawings shall include all outside utility connections, piping, etc. installed under this Contract. Locate and dimension all work with reference to permanent landmarks

B. Match all symbols and designations used in the contract drawings when preparing the as-built drawings.

C. Indicate clearly and correctly all work installed differently from that shown and maintain records up to date as work progresses. Include invert elevations of pipes below grade of floor, the floor lines, plugged wyes, tees, caps, exact locations and sizing of piping, location of valves, and the like. Dimension locations from structural points.

D. Properly identify all stubs for future connections as to locations and use by setting of concrete markers at finished grade in a manner suitable to the Architect/Engineer.

PART 2 PRODUCTS

2.1 MATERIALS

A. Provide factory-fabricated piping specialties and valves recommended by manufacturer for use in service indicated. Provide piping specialties of types and pressure ratings indicated for each service, or if not indicated, provide proper selection as determined by Contractor to comply with installation requirements. Provide sizes and connections which properly mate with pipe, tube, and equipment connections. Where more than one type is indicated, selection is Contractor's option.

B. Unless otherwise indicated, provide valves of same size as upstream pipe size.

C. No material installed as part of this work shall contain asbestos in any form.

2.2 MATERIALS AND EQUIPMENT

A. Mention herein or on drawings requires that this Contractor provide each item listed of quality noted or equal. All material shall be new, full weight, standard in all respects, and in first- class condition. Provide materials of the same brand or manufacturer throughout for each class of material or equipment wherever possible. Materials shall be tested within the Continental United States by an independent, nationally recognized testing agency and shall be listed in accordance with testing agency requirements.

B. The grade or quality of materials desired is indicated by the trade names or catalog numbers stated herein.

C. Dimensions, sizes, and capacities shown are a minimum and shall not be changed without permission of the Architect/Engineer.

2.3 MATERIALS FURNISHED

A. Identify all materials and equipment by manufacturer's name and model number. Remove unidentified materials and equipment from site.

B. Equipment specified by manufacturer's number shall include all accessories, controls, etc. listed in catalog as standard with equipment. Furnish optional or additional accessories as specified.

C. Equipment or material damaged during transportation, installation, or operation is considered as totally damaged. Replace with new equipment. Variance from this permitted only with written consent of the Architect/Engineer.

D. Provide an authorized representative to constantly supervise work of this division. Check all materials prior to installation for conformance with the drawings and specifications.

PART 3 EXECUTION

3.1 ACCESS TO PLUMBING WORK

A. Comply with manufacturer's instructions for installation of access doors.

B. Access panels shall be furnished and installed wherever valves, balance valves, damper operating mechanisms, air terminal units, fans, and similar items normally requiring adjustment or servicing are installed in concealed or inaccessible spaces. Coordinate with access doors shown on architectural drawings.

3.2 DRAWINGS AND COORDINATION

A. General arrangement and location of piping, ductwork, equipment, etc. are shown on the drawings or herein specified. Carefully examine other work that may conflict with this work. Install this work in harmony with other crafts and at proper time to avoid delay of work.

B. In advance of construction, work out minor changes and relocations to suit actual conditions and work of other trades to avoid conflict therewith. This shall not be cause for additional cost.

C. Verify all measurements at the building and be responsible for the correctness of same. No extra compensation will be allowed on account of differences between actual dimensions and those indicated on the drawings.

D. In addition, obtain all necessary information from the other trades regarding centers of partitions, walls, location of plumbing mains, fire sprinkler mains, and electrical conduits, ducts, pipes, etc. in order that pipes, equipment, and ductwork may be placed in their correct positions.

E. Execute any work or apparatus shown on the drawings and not mentioned in the specifications, or vice versa, the same as if specifically mentioned by both. Omission from Drawings or specifications of any minor details of construction, installation, materials, or essential specialties does not relieve the Contractor from furnishing same in place complete.

F. Furnish and install any incidental work not shown or specified which can reasonably be inferred as part of the work and necessary to provide a complete and workable system.

G. Furnish materials and work at proper time to avoid delay of the work.

3.3 ACCESS

A. Continuously check architectural drawings for clearance and accessibility of equipment specified herein to be placed. No allowance of any kind will be made for negligence on the part of the Contractor to foresee means of installing his equipment into proper position.

3.4 CLOSING IN OF UNINSPECTED WORK

A. Do not allow or cause work installed to be covered up or enclosed before it has been inspected and tested. Should work be enclosed or covered up before it has been inspected and tested, uncover work at own expense. After it has been inspected and tested, make repairs necessary to restore work of other contractors to condition in which it was found at time of cutting.

3.5 PROJECT MODIFICATIONS

A. During the progress of construction, if any conditions arise that necessitate revisions, modifications, or relocation of any plumbing equipment or materials, such revisions shall be immediately brought to the attention of the Architect/Engineer. The Contractor shall then prepare necessary drawings showing the proposed changes. All proposed changes shall be submitted, reviewed, and approved by the Architect/Engineer prior to proceeding with any associated revision work in the field.

B. Maintain copies of all approved changes at the project site for reference by all parties during the remaining work.

C. Incorporate all revisions into the as-built drawings.

3.6 FORMING, CUTTING AND PATCHING

A. Coordinate with other contractors as necessary to provide any special forming, recesses, chases, etc., and provide wood blocking, backing, and grounds as necessary for proper installation of mechanical work.

B. If this Contractor fails to coordinate with other contractors at proper time or fails to locate items properly, resulting in extra work, then this Contractor is responsible.

C. This Contractor is responsible for proper placement of pipe sleeves, hangers, inserts, and supports for work.

3.7 SEISMIC BRACING

A. See Specification Section 220540 (Seismic Bracing for Plumbing Piping and Equipment).

3.8 GUARANTEE

A. The Contractor shall be responsible for all work done and material installed under the plans and specifications. Repair or replace, as may be necessary, any defective work, material, or part which may show itself within one year of filing of the Notice of Substantial Completion and be responsible for damage to other materials, furnishings, equipment, or premises caused by such defects during this period, if in the opinion of the Architect/Engineer said defect is due to

imperfection of material or workmanship. Provide all such work and materials at no cost to the Owner.

B. The Contractor shall be responsible for damage to any part of the premises during the guarantee period that is caused by defects, leaks, or breaks in work furnished and/or installed under this section.

3.9 PROJECT COMPLETION TESTS AND START-UP

A. Upon completion of the plumbing work, or at such time prior to completion as may be determined by the Architect/Engineer, operate and test all plumbing equipment and systems for a period of at least three consecutive 8 hour days to demonstrate the satisfactory overall operation of the building or project as a complete unit. Commence tests after preliminary balancing and adjustments to equipment have been checked. Notify the Architect/Engineer at least seven calendar days in advance of starting the required tests.

B. Provide training and orientation of Owner's operating staff in proper care and operation of all plumbing equipment, systems, and controls.

C. Neatly tabulate and deliver to the Architect/Engineer complete operational data. The Architect/Engineer reserves the right to spot check results, and if discrepancies or errors are noted, the Contractor will be required to redo balancing tests and tabulations entirely.

D. During the test period, make final adjustments and balancing of equipment, systems, controls, and circuits so that all are placed in a first class operating condition.

E. Mark final positions of balancing valves after balancing is complete.

F. Final observation will not be made until all of the above have been completed and the balance report has been submitted and reviewed.

3.10 CLEANING UP

A. Upon completion of the Work remove materials, equipment, apparatus, tools, and the like, and leave the premises clean, neat, and orderly.

END OF SECTION

SECTION 220500 - BASIC MATERIALS AND METHODS FOR PLUMBING

PART 1 GENERAL

1.1 CONDITIONS OF THE CONTRACT

A. The Conditions of the Contract (General, Supplementary, and other Conditions) and Section 220000 (Plumbing) are hereby made a part of this section.

B. This section provides requirements for basic materials and methods related to all of the Plumbing work. This section applies to all other Division 22 specification sections.

1.2 WORK INCLUDED

A. Types of Plumbing related work specified in this section include the following:
1. Materials
2. Valves
3. Valve Boxes
4. Hangers and Supports for HVAC Systems
5. Seismic Bracing for HVAC Systems
6. Flow Meters
7. Access Doors
8. Roof and Wall Flashings
9. Cathodic Protection
10. Thermometers
11. Pressure Gauges
12. Unions and Flanges
13. Pipe Escutcheons
14. Pipe Sleeves
15. Sleeve Seals
16. Low Pressure Strainers
17. Penetrations in Fire and Smoke Rated Partitions
18. Pipe Anchors and Guides
19. Flexible Hose Expansion Loops
20. Piping and Equipment Identification
21. Detectable Underground Warning Tape
22. Concrete Work
23. Electric Heat Tracing
24. Electric Motors
25. Electric Motor Starters

B. Types of valves specified in this section include the following:
1. Ball Valves
2. Butterfly Valves
3. OS&Y Valves
4. Check Valves
5. Gas Valves
6. Manual Balance Valves
7. Automatic Pressure-Compensating Balance Valves
8. Motor Operated Ball Valves

9. Pressure Relief Valves
10. Emergency Fuel Shutoff Valves

1.3 PROJECT CONDITIONS

A. Existing Utilities: Locate and protect existing utilities and other underground work in manner which will ensure that no damage or service interruption will result from excavating and backfilling.

1.4 QUALITY ASSURANCE

A. Manufacturer's Qualifications: Firms regularly engaged in manufacture of piping specialties and valves, of types and sizes required, whose products have been in satisfactory use in similar service for not less than 5 years.

B. Valve Types: Provide valves of the same type by the same manufacturer.

C. Identification: Provide piping specialties and valves with manufacturer's name (or trademark) and pressure rating clearly marked on valve body.

D. Regulatory Agency Requirements: Valves used in fire protection piping shall be UL listed and FM approved.

1.5 SUBMITTALS

A. Refer to Section 013300 - Submittal Requirements for submittal procedures.

B. Product Data: Submit manufacturer's technical product data and installation instructions for each type of manufactured piping specialty and valve. Include pressure drop curve or chart for each type and size of valve, each control valve, and each balancing valve.

C. Operation and Maintenance Data: Submit operation and maintenance data and spare parts lists for each type of manufactured piping specialty and valve. Include this data and product data in operation and maintenance manual.

PART 2 PRODUCTS

2.1 MATERIALS

A. Provide factory-fabricated piping specialties and valves recommended by manufacturer for use in service indicated. All valves, fittings and accessories installed in potable water systems shall be rated for such use. Provide piping specialties of types and pressure ratings indicated for each service, or if not indicated, provide proper selection as determined by the Contractor to comply with installation requirements. Provide sizes and connections which properly mate with piping, tubing, and equipment connections. Where more than one type is indicated, selection is the Contractor's option.

B. Unless otherwise indicated, provide valves of same size as the upstream pipe size.

C. All valves, fittings, and accessories located in potable water systems shall be constructed of appropriate materials and conform to the requirements of NSF/ANSI Standards 61 and 372.

2.2 VALVES

A. Provide valves as shown and other valves necessary to segregate branches or units. Furnish discs suitable for service intended. Furnish a brass tag with identification of service controlled for each valve. Properly pack and lubricate valves. Place a union adjacent to each threaded valve. Provide two unions at soldered valves. Provide flanged valves in welded pipe. Provide ball valves in water lines, unless otherwise shown.

B. Valves shall be full size of pipe, manufactured by Nibco, Apollo, Milwaukee, Nordstrom, or approved equal, in accordance with the following schedule and with the remainder of this specification section:

Ball Valves	3" and smaller	Nibco T585-66-LF	Milwaukee UPBA400S
Butterfly Valves	4" and larger	Nibco LD-2022	Milwaukee HL-234E
OS&Y Valves	4" and larger	Nibco F607-RWSB	Milwaukee F-2885-MRW
Check Valves	2" and under 2-1/2" and over	Nibco T413-Y-LF Nibco F910-B-LF	Milwaukee UP509 Milwaukee 1800
Gas Valves	4" and under 5" and over	Nibco T-FP-600A-LF Nordstrom 149	Apollo 94ALF-A Resun R013410-WGA

C. Ball Valves: Nibco T585-66-LF, Milwaukee UPBA400S, or approved equal. All valves shall have stainless steel ball and stem, RPTFE packing, and throttling handle. Furnish the flow performance curve for each valve.

D. Butterfly Valves: Nibco Series LD-2022, Milwaukee Series HL-234E, Demco Series NE, Norriseal Series R200, or approved equal. All valves shall have EPDM seats with stainless steel disc, and throttling handle with memory stop. Provide handles for shutoff service, and infinite position throttling capability with indicator plates for balancing.

E. Manual Balance Valves (2" and Below): Fixed port venturi style, IMI Flow Design AccuSetter UA Series, Pro-Hydronic CBV Series, Taco Accu-Flo, Bell & Gossett Circuit Setter Plus, Nibco T-1810, or approved equal. Variable orifice balancing valves are not acceptable.

F. Manual Balance Valves (2-1/2" and Above): Fixed port venturi style, IMI Flow Design AccuSetter AF Series, Hays Series CBVF, Nexus Series NVFB, Bell and Gossett Circuit Setter Plus, Nibco F739, or approved equal. Variable orifice balancing valves are not acceptable.

G. Automatic Pressure-Compensating Flow Control Valves: Valves shall include removable stainless steel cartridge, union, and test ports. Valves shall be IMI Flow Design Model AC, Pro-Hydronic Model AFLB, Nibco Model 1880, or approved equal. Install valves per manufacturer's written instructions. Provide a strainer at the inlet of each associated coil.

H. Motor-Operated Ball Valves: Provide motor-operated ball valves where indicated on the drawings. Motor-operated ball valves shall be Belimo B2 Series, or approved equal.

I. Motor-Operated Butterfly Valves: Provide motor-operated butterfly valves where indicated on the drawings. Motor-operated ball valves shall be Belimo F6 Series, or approved equal.

J. Manual Air Vent Valves: Manual air vents shall be furnished as indicated on the drawings, complete with ball type isolation valve, Hoffman Model 78, or approved equal. Valve pressure rating shall be as required for the system in which installed.

K. Automatic Air Vent Valves: Automatic air vents shall be furnished as indicated on the drawings and shall be Hoffman No. 79, Spirotherm Spirotop, or approved equal. Pipe vents to the nearest floor sink. Valve pressure rating shall be as required for the system in which installed.

L. General Purpose Solenoid Valves: Asco Series 8210, or approved equal.

M. Pressure Relief Valves:
   1. Provide ASME rated pressure relief valves and temperature and pressure relief valves as indicated on the drawings. Valve size and capacity shall be as required for proper relieving capacity equal to or greater than the capacity of the associated equipment output rating. Valves shall be sized and rated for compliance with Section IV of the ASME Boiler and Pressure Vessel Code and ANSI Z21.22 where applicable.
   2. Pressure Relief Valves: Where indicated on the drawings for boilers, heat exchangers, chillers, etc. provide bronze body relief valves with test lever, complying with listing requirements for temperature and pressure discharge capacity. Valves shall be Watts Series 174A, Series 374, Series 740, or approved equal.
   3. Combined Pressure and Temperature Relief Valves: When indicated on the drawings for water heaters and/or hot water storage tanks provide bronze body relief valves with test lever and thermal sensor (thermostat), complying with listing requirements for temperature and pressure discharge capacity. Valves shall be Watts XL Series, or approved equal.
   4. Available Manufacturers: Subject to compliance with requirements, manufacturers offering relief valves which may be incorporated in the Work include the following:
      a. Watts
      b. Bell and Gossett
      c. Spirax Sarco

N. Emergency Fuel Shutoff Valves: Asco Series S261 (gas), Asco Series SV401 (fuel oil), or approved equal.

2.3 HANGERS AND SUPPORTS FOR PLUMBING SYSTEMS

A. See Specification Section 220530 (Hangers and Supports for Plumbing Systems).

2.4 SEISMIC BRACING FOR PLUMBING SYSTEMS

A. See Specification Section 220540 (Seismic Bracing for Plumbing Systems).

2.5 FLOW METERS

A. Flow Meters Make-Up Water: When shown on the drawings, provide ultrasonic style flow meters, Belimo Model FM100, or approved equal. Turbine type flow meters are not acceptable. Flow meters shall be installed in strict conformance with the manufacturer's installation instructions, including required straight pipe length upstream and downstream of the flow meter.

B. Flow Meters for Domestic Cold Water Mains: When shown on the drawings, provide Seametrics Model MJNE brass body flow meter, with hall-effect sensing, or approved equal. Flow meter shall be certified under NSF/ANSI Standard 61 for use in a potable water system.

2.6 ACCESS DOORS

A. Where floors, walls, or ceilings must be penetrated for access to plumbing equipment, provide access doors with 14 inch by 14 inch minimum usable opening. Where entrance of a serviceperson may be required provide 18 inch by 24 inch minimum usable opening.

B. Access doors shall match those shown on the architectural plans or in the architectural specifications (typically in Division 8) unless noted otherwise herein.

C. Where specific information or details relating to access panels different from the above is shown or given on the drawings or in other divisions of work, then that information shall supersede this specification.

D. Where access panels are located on ducts or plenums, provide neoprene gaskets to prevent air leakage, and use frames to set door out to flush with insulation.

E. Provide insulated access doors where located in internally insulated ducts or casings.

F. Available Manufacturers: Subject to compliance with requirements, manufacturers offering access doors which may be incorporated in the work include the following:
   1. Milcor Style K (Plaster)
   2. Style A (AC Tile, Gypsum Board)
   3. Style M (Masonry)
   4. Style (Fire-Rated where required)

2.7 ROOF AND WALL FLASHINGS

A. Flashing for penetrations of the roof for plumbing items such as flues, ducts, and pipes will be furnished and installed under other sections of these specifications. The work of this section shall include layout, sizing, and coordination of penetrations required for the plumbing work.
   1. Furnish and install counter-flashings above each flashing required in the plumbing work. Flues and ducts shall have A 24 gauge galvanized sheet metal storm collar securely clamped to the flue or duct above the flashing.
   2. Sewer vents and other piping extending through roof structure shall have flashing provided and installed as part of the roofing work. This contractor shall coordinate his Work accordingly.

B. Sewer vents and other piping extending through roof structure shall have Semco, Smith, or equal to Semco #1100-4, with counterflashing sleeves installed.

2.8 CATHODIC PROTECTION

A. Furnish and install dielectric unions at all locations described herein, whether shown on the drawings or not, and except as noted herein. Construct couplings and flanges so that the two pipes being connected are completely insulated from each other with no metal-to-metal contact. Heavily line the couplings with a hard, insulating, phenolic plastic threaded in standard pipe sizes. Make up the flanges with insulating components consisting of a hard, phenolic gasket, bolt sleeves, and bolt washers. Supplement the insulating gasket with neoprene faces to form a seal.

B. Available Manufacturers: Subject to compliance with requirements, manufacturers which may be incorporated in the work include the following:
   1. Maloney
   2. Walter C. Vallet

2.9 THERMOMETERS

A. Thermometers shall be of the bimetal helix type, Miljoco Model B5099A, or approved equal by Weiss or Weksler. Thermometers shall be accurate to within plus or minus 1% throughout the entire scale range. Scales shall have a minimum of 2 degrees between graduations and a maximum of 20 degrees between figures.

B. Thermometers shall be 5 inch diameter with polycarbonate lens, stainless steel case and ring, stainless steel stem, and stainless steel well. Thermometer stem length for piping shall be 2-1/2 inches, and stem length for tanks shall be 9 inches. Thermometers installed on insulated tanks or piping shall be provided with an extension neck well to compensate for the thickness of the insulation.

C. Thermometer ranges shall be as listed below.

Location	Range
Cold water piping.	25° to 125°F
Hot water piping.	0° to 250°F

D. Thermometers shall include an adjustable bracket allowing rotation to any position, and shall be located such that they are easily read from a normal vantage point.

2.10 PRESSURE GAUGES

A. Pressure gauges shall be flangeless case type, Miljoco Model P4598L, or approved equal by Weiss or Weksler. Gauges shall be accurate to within plus or minus 1% throughout the entire scale range. Scales shall have a minimum of 2 degrees between graduations and a maximum of 20 degrees between figures.

B. Pressure gauges shall be 4-1/2 inch diameter with acrylic lens, stainless steel case, and stainless steel ring. Gauge movement shall be brass with precision-milled teeth. Gauges shall be selected with a pressure range such that the gauge reads near the middle of the total gauge range at the pressure indicated on the drawings.

2.11 UNIONS AND FLANGES

A. Furnish and install unions at each threaded or soldered connection to all equipment, tanks and valves, of type specified in following schedule:

Type of Pipe	Union
Steel pipe 2" and smaller	150 lb screwed malleable ground joint, brass to iron seat, black for black piping, galvanized for galvanized piping.

Screwed steel, black or galvanized 2-1/2" and larger	125 lb cast iron screwed flanged union, flat faced, gasket, black for black piping, galvanized for galvanized piping.
Copper tubing 2" and smaller	150 lb bronze ground joint, bronze to bronze sweat connection.
Copper tubing 2-1/2" and larger	150 lb cast bronze, flat faced flange with silver brazing threadless ends.

B. Insulating couplings or flanges shall be furnished and installed at all connections of piping with dissimilar materials. Construct couplings so that the two pipes being connected are completely insulated from each other with no metal-to-metal contact. Heavily line the couplings with a hard, insulating, phenolic threaded coupling in standard pipe sizes.

C. Furnish and install flanges at each flanged connection to equipment, tanks, and valves per following schedule:

Type of Pipe	Flanges
Screwed black or galvanized steel pipe 2-1/2" and larger	125 lb cast iron screwed flange flat faced, black or galvanized as required, unless noted otherwise.
Welded steel pipe 2-1/2" and larger	150 lb forged steel welding flanges, 1/16" raised faced, unless noted otherwise.

D. Provide full faced or ring type gasket material to suit facing on flanges. Gasket material shall be 1/16" thick Garlock Blue-Gard, or approved equal. Gasket material shall be suitable for the connected piping system content and temperature.

2.12 PIPE ESCUTCHEONS

A. Provide chrome plated brass pipe escutcheons with inside diameter closely fitting pipe outside diameter or outside of pipe insulation where pipe is insulated. Select outside diameter of escutcheon to completely cover pipe penetration hole in floors, walls, ceilings, or pipe sleeve extension, if any. Furnish pipe escutcheons with nickel or chrome finish and screw or spring clamping device with concealed hinge.

B. Available Manufacturers: Subject to compliance with requirements, manufacturers offering pipe escutcheons which may be incorporated in the work include the following:
   1. Chicago Faucets
   2. Pasco Specialty and Manufacturing
   3. Sanitary-Dash

2.13 PIPE SLEEVES

A. Where pipes pass through a concrete floor slab the pipe shall be covered with high density fiberglass insulation. Pipe insulation shall be 1/2” to 1” thick Johns Manville Microlok HP or Johns Manville Trymer 25-50 for the full thickness of the concrete. After the piping has been installed

and the concrete has been poured, the fiberglass insulation shall be cut away or compressed leaving a 1/2" deep space that shall then be filled with a high quality silicone sealant resulting in a flat, water-tight installation.

B. Where pipes pass through fire rated concrete floors or walls install a Schedule 10 galvanized metal sleeve providing between a 1/2 inch and 1 inch clearance around the sides of the pipe and/or pipe insulation for the full thickness of the concrete. After the piping has been installed, fill the annular space in accordance with the applicable UL fire rating system.

C. Available Manufacturers: Subject to compliance with requirements, manufacturers offering pipe sleeves which may be incorporated in the work include the following, or approved equal:
   1. 3M

2.14 SLEEVE SEALS

A. Provide sleeve seals for sleeves located in foundation walls below grade or in exterior walls as follows:
   1. Foundations: Lead and oakum, caulked between sleeve opening and pipe.
   2. Walls Below Grade: Modular mechanical type, consisting of interlocking synthetic rubber links shaped to continuously fill the annular space between pipe and sleeve, connected with bolts and pressure plates which cause rubber sealing elements to expand when tightened, providing watertight seal and electrical insulation.
   3. Available Manufacturers: Subject to compliance with requirement, manufacturers offering mechanical sleeve seals which may be incorporated in the work include the following:
      a. Thunderline Link-Seal
      b. Calpico

2.15 LOW PRESSURE STRAINERS

A. Provide wye or basket strainers as indicated on the drawings. Strainers shall be full line size of connecting piping, with ends matching the piping system materials, and with cast iron body. Select strainers for 125 psi working pressure, with stainless steel screens, and gasket seal. Provide hose end ball valve on drain fitting. Strainer screens shall have an open area equal to at least twice the cross-sectional area of the pipe in which they are installed (based on IPS) and may be either woven wire or perforated type. Strainer openings shall be .045 inch diameter perforations for strainers up to 3" size and .125 inch diameter perforations for strainers 4" size and larger.

B. Available Manufacturers: Subject to compliance with requirements, manufacturers offering low pressure strainers which may be incorporated in the work include the following, or approved equal:
   1. Metraflex
   2. Taco
   3. Bell & Gossett
   4. Watts

2.16 PENETRATIONS IN FIRE AND SMOKE RATED PARTITIONS

A. Maintain indicated fire or smoke rating of walls, partitions, ceilings, and floors at pipe, conduit, and duct penetrations. Seal all penetrations with fire-stop and smoke-stop materials complying with the requirements for firestopping and fill materials specified in this section.

B. Schedule and conduct a firestopping pre-installation conference at the job site. Coordinate all firestopping means and methods with other contractors and the general contractor (when applicable) prior to beginning any work.

C. Installer Qualifications: A firm that has been approved by FM Global according to FM Global 4991 (Approval of Firestop Contractors), or been evaluated by UL and found to comply with their 'Qualified Firestop Contractor Program Requirements'.

D. Install all penetration firestopping systems to comply with the manufacturer's written installation instructions and published drawings for products and applications.

E. Do not install penetration firestopping system when ambient or substrate temperatures are outside limits permitted by the penetration firestopping system manufacturer or when substrates are wet because of rain, frost, condensation, or other causes.

F. Install and cure penetration firestopping materials per manufacturer's written instructions using natural means of ventilation, or where this is inadequate, forced-air circulation.

G. The specified firestopping systems are based on a solid sealant only, or combinations of solid sealant, foam sealant, and refractory fibers of thickness required to attain hour ratings.

H. Systems shall comply with the following:
   1. Provide a flexible seal to prevent passage of fire, smoke, toxic gases, and water through openings, and prevent transmission of sound and vibration from the penetrating element to the structure.
   2. Provide hour ratings indicated and in accordance with ASTM E 814 and/or UL 1479.
   3. For projects located in the State of California comply with requirements of CBC Sections 709.6, 709.7, 709.8, 710.2, 710.3 and 710.6, and CBC Standards 7-1 and 7-5.

I. Acceptable Manufacturers: 3M, Hilti, Nelson, Specified Technologies, Tremco, Roxtec, or as otherwise specified. The established standard in most cases is 3M, unless otherwise specified. The listed products are specified to establish standards and the type of materials required. Materials shall be as specified, or approved equal.

J. Sealant: Select among the following materials as appropriate.
   1. Solid (Elastomeric): 3M Fire Barrier Premium Latex CP 25WB+ Caulk, one-component elastomeric water-based latex sealant designed for use as a through-penetration firestop.
      a. Foam: 3M Fire Barrier 2001 Silicone RTV Foam, two-component silicone elastomer foam-in-place sealant designed to fill irregular or complex voids.
      b. Wrap Strip: 3M Fire Barrier FS-195+ Wrap Strip, fire resistive strip designed to be wrapped around the penetrating item and secured in place.
      c. Restricting Collar: 3M Fire Barrier RC-1 Restricting Collar, sheet metal, designed for use with wrap strip in combustible through-wall firestop penetration systems.
      d. Composite Sheet: 3M Fire Barrier CS-195+ Composite Sheet, elastomeric layer reinforced with mesh restraining wire and covered with aluminum foil on one side and bonded to sheet metal, forming a fire resistive sheet.
      e. Putty: 3M Fire Barrier MP Moldable Putty+ Pads and Sticks, one-component elastomeric formable putty, designed for use as a through-penetration firestop system.
      f. Spray: 3M FireDam Spray 100, flexible water-based coating.
      g. Primers: As recommended by the sealant manufacturer.

K. Pillows: Nelson PLW Firestop Pillow, Hilti FS Fire Block, dust proof chemical resistant cloth with heat-reactive expanding solidifying fill, designed for large openings that require frequent cable alterations.

L. Safing Insulation: USG Thermafiber Safing Insulation, 4 lb density mineral wool insulation, unless indicated otherwise.

M. Damming Materials: As recommended by the firestopping manufacturer.

2.17 PIPE ANCHORS AND GUIDES

A. Provide pipe anchors and guides as indicated on the drawings and/or as required to accommodate any thermal expansion, contraction, or seismic movement of the piping system. Pipe anchors and guides shall be Metraflex Model PGIV, or approved equal by Mason Industries.

2.18 FLEXIBLE HOSE EXPANSION LOOPS

A. Provide flexible hose expansion loop(s) as indicated on the drawings and/or as required to accommodate any thermal expansion, contraction, or seismic movement of the piping system. Flexible hose expansion loops shall be Metraloop as manufactured by Metraflex, or approved equal.

B. Flexible hose expansion loops shall be manufactured complete with two parallel sections of corrugated metal house, compatible braid, 180 degree return bend, with inlet and outlet connections. Field fabricated loops will not be acceptable.

C. Flexible loops shall be capable of 4 inches of movement in the ±X, ±Y, and ±Z planes.

D. Flexible hose expansion loops shall impart no thrust loads to system supports, anchors, or the building structure.

E. Flexible hose expansion loop return fittings shall be supported to allow movement.

F. Flexible loops for natural gas service shall be CSA/AGA certified.

G. All flexible hose expansion loops shall be manufactured in accordance with the documented manufacturer's weld procedure specifications.

H. The weld procedure qualification record shall be used to document the execution of the procedure and shall follow the general guidelines of ASME Section IX. Each welder shall conform to the in-house procedure qualification record and be qualified prior to each production lot. The testing of each individual welder shall be documented in a welding procedure qualification record.

I. Install loops and guides per the manufacturer's written installation instructions and the Mechanical Contractors Association of America 'Guidelines for Quality Piping Installations'.

2.19 PIPING AND EQUIPMENT IDENTIFICATION

A. Each piping system furnished and installed under this work shall be identified and the direction of flow indicated by means of colored labels and flow arrows, all as specified herein. The labels shall be applied after all painting, priming, and cleaning of the piping and insulation is completed.

B. Provide prefabricated coiled plastic piping labels as manufactured by Marking Services Incorporated (MSI), or approved equal. Labels shall comply with ASME A13.1 with regard to

color, letter height, and marker size. The labels shall have black or white lettering and flow arrows on colored backgrounds and shall not require adhesive.

C. The label background colors shall conform to the color schedule in the 'Execution' section of this specification.
   1. For pipe labels used indoors use coiled polyester labels, MSI Model MS-975, or equal.
   2. For pipe labels used outdoors use coiled polyester labels, MSI Model MS-995, or equal.
   3. For piping with an outside diameter, including insulation, greater than 6 inches provide the label manufacturer's nylon straps to secure label to piping. Labels shall lie smoothly against pipe or insulation completely around the pipe.
   4. The size of the lettering and label shall be such that the lettering can be easily read from the floor and the colors shall be easily discernible.

D. Provide a white plastic lamacoid plate for each and every piece of equipment installed in this work. Lettering on plate shall be black, with size of lettering to suit equipment. Lettering shall be a minimum of 1/2 inch in height. Plates shall be riveted or bolted to equipment near electrical disconnect or control access panel.

E. Where mechanical or plumbing equipment requiring access is located above a ceiling or behind an access panel, provide an adhesive clear plastic label with 3/8" black lettering on the ceiling grid or access panel identifying the equipment.

F. Available Manufacturers: Subject to compliance with requirements, manufacturers which may be incorporated in the Work include the following:
   1. Marking Services Incorporated (MSI)
   2. LEM Products
   3. Seton
   4. Craftmark

2.20 DETECTABLE UNDERGROUND WARNING TAPE

A. Protect the following underground piping and conduit systems (when shown on the mechanical and/or plumbing drawings) with a detectable underground warning tape, as manufactured by Seton MSI, or approved equal.
   1. All gas, fuel oil, and/or oxygen piping.
   2. All heating water, chilled water, and condenser water piping.
   3. All heat pump loop piping, including ground loop piping.
   4. Temperature control communication conduits.

B. Detectable underground warning tape shall consist of 5 mil foil tape printed with associated pipe service (e.g., 'Caution Gas Line Below').

C. Tape shall be buried approximately one half of the pipe buried depth.
   1. Tape buried up to 24" deep shall be a minimum of 3" wide.
   2. Tape buried greater than 24" deep shall be a minimum of 6" wide.

D. The methodology for locating the detectable underground warning tape shall be demonstrated by the Contractor utilizing an appropriate location device. Location device shall be Ridgid 'Seetech, Ridgid 'Navitrack', or approved equal.

2.21 CONCRETE WORK

A. Where specifically indicated on the drawings or specified as part of the mechanical work, this Contractor shall furnish and install concrete work such as thrust blocks and/or spring isolator bases.

B. Concrete and reinforcing steel shall be equal to that specified for general construction.

C. Except as noted above, concrete work will be furnished and installed by others. This Contractor shall coordinate all requirements accordingly.

2.22 ELECTRIC HEAT TRACING

A. For projects that include electric heat tracing see Specification Section 222300 (Heat Tracing for Plumbing Piping).

2.23 ELECTRIC MOTORS

A. Electric motors larger than 1/2 horsepower (hp) rating shall be, unless otherwise noted, shall be ball bearing, open drip proof, squirrel cage, induction type, normal starting torque, 3 phase, 60 cycle service, 40°C continuous rating, and shall conform in all respects to latest applicable standards of NEMA and AIEE. Motors shall be Century, Louis Allis, Baldor, or equal. Motors located outdoors shall be TEFC type.

B. All motors 1 hp and above shall be high efficiency type, Century E-Plus, or approved equal.

C. Motors utilized with variable frequency drives shall be rated as inverter duty per NEMA standards.

D. Motors shall have nameplate voltage rating of operating voltage specified in subsequent sections of specifications or as shown on drawings and shall have a 1.15 service factor.

E. For normal applications, motors shall be furnished for normal starting torque duty. It shall be this Contractor's responsibility, however, to provide motors and starters (where starters are furnished under this section) having suitable starting torque and current characteristics to allow starting the equipment within the branch circuit protection provided and within the overload protection required by code.

F. Splash-proof or totally enclosed motors having a continuous duty temperature rise rating not exceeding 35°C shall have adequate starting torque, as recommended by the manufacturer, for the service intended.

G. All motors shall be rated at +10% of the scheduled voltage. If not, provide each motor with a boost transformer sized for the intended use and installed in a rated enclosure.
   1. Boost transformers for equipment provided under the mechanical work shall be furnished by the mechanical contractor and turned over to the electrical contractor for installation, unless otherwise noted.

H. Shaft Grounding:
   1. All variable frequency drive motors less than 300 hp shall have a single shaft grounding system to protect the bearings from capacitive discharge through the bearings.
   2. Available Manufacturers: Subject to compliance with requirements, manufacturers which may be incorporated in the work include the following, or approved equal:

a. CR Series by Shaft Grounding Systems
b. AEGIS SGR Conductive Microfiber Brush

2.24 ELECTRIC MOTOR STARTERS

A. Magnetic motor starters for equipment provided under the mechanical work shall be furnished by the mechanical contractor and turned over to the electrical contractor for installation, unless otherwise noted. All motor starters shall be by the same manufacturer, Westinghouse, Square D, Cutler-Hammer, General Electric, or approved equal.

B. Magnetic motor starters provided as part of motor control centers shall be provided and installed by the electrical contractor.

C. Unless otherwise noted, magnetic motor starters shall be furnished in a NEMA 1 enclosure for inside installation and in a gasketed NEMA 4 enclosure for outside installation, with three thermal overloads for three phase motors and one overload element for single phase motors. All overloads shall be ambient compensated.

D. Submit schedule to the Architect/Engineer denoting the following:
   1. Designation of each motor
   2. Name plate rating of each motor
   3. Running current of each motor
   4. Catalog number and rating of starter overload elements
   5. Circuit breaker trip size (when in combination starter)

E. Combination magnetic starters shall be Westinghouse Type A206 with circuit breaker disconnect and trip size of breaker as required for motor size, or as otherwise noted.

F. Magnetic motor starters shall be Westinghouse Type A200, or approved equal.

G. Manual motor starters shall be Westinghouse Type MST01 less enclosure, or approved equal.

H. Magnetic motor starters shall be provided with cover-mounted Hand-Off-Auto 'Oil-Tight' type switches as scheduled with integral fused 120 volt single phase control transformers.

PART 3 EXECUTION

3.1 ACCESS TO PLUMBING WORK

A. Comply with manufacturer's instructions for installation of access doors.

B. Access panels shall be furnished and installed wherever valves, balance valves, damper operating mechanisms, air terminal boxes, fans, and similar items normally requiring adjustment or servicing are installed in concealed or inaccessible spaces. Coordinate with the access doors shown on the architectural drawings.

C. Where access panels are detailed on architectural or mechanical drawings, sizes indicated thereon shall be used.

D. Where access panels are to be located in acoustic tile ceilings, the size of the access panel required shall be increased to properly fit the tile pattern without cutting into the tile.

3.2 EXCAVATION AND BACKFILL

A. Do excavating required for installation of piping and service lines and other work that applies as indicated on drawings. Verify location and elevation of all existing utilities prior to excavation for installation of new piping.

B. Excavations shall be of open vertical construction of sufficient width to provide free working space at both sides of trench and around pipe as required for caulking, joining, backfilling, and compacting.

C. Where invert elevations are not shown, dig trenches to sufficient depth to provide a minimum of 30 inches of fill above top of exterior piping, measured from adjoining finished grade, except as follows:

D. Outside water lines (36” inches minimum cover); Gas lines (30” minimum cover)

E. Dig trenches straight and true to line and grade with holes for bells for bell-and-spigot pipe. Evenly support piping for its entire length upon outside periphery of lower one third of pipe.

F. Where rock is encountered, undercut trenches by 3 inches, and fill with well tamped clean sand and pea gravel as required to correct pipe elevation.

G. After piping in the excavation has been installed and tested, backfill excavation to a point 6 inches above the piping using sand, fine earth, or other materials free of rocks and large lumps. Proceed evenly on both sides of the pipe and continuously tamp. Except as hereinafter noted, backfill more than 6 inches above the top of the pipe shall be made by using earth from excavation placed in layers of 8 inch maximum depth. Compaction of each successive layer shall be achieved using a mechanical compactor.

H. Special care shall be taken when backfilling over and around wrapped piping to prevent damage to the protective wrapping.

I. Bed sewers under pavements and any wrapped piping in sand prior to backfilling. Backfill to a point 6 inches above the pipe with sand.

J. When pipe or underground conduit with a protective wrapping is to be placed in the trench, sand only shall be used for bedding the pipe or conduit. The sand used shall be certified to have a minimum resistance of 5000 ohms per cubic centimeter when wetted to any moisture content with distilled water and shall consist of clean, natural, washed sand, hard, and durable particles varying from fine particles to particles of such size that all will pass through a 3/8 inch screen, not less than 90 percent will pass through a 1/4 inch screen, and not more than 25 percent will pass through a No. 50 screen.

K. Any backfill placed under this contract which subsides or settles below the adjacent finished grade or paving level during the guarantee period shall be brought to grade by the Contractor by adding compacted backfill or additional paving in paved areas.

3.3 INSTALLATION OF HANGERS AND SUPPORTS

A. See Specification Sections 220530 (Hangers and Supports for Plumbing Systems) and 220540 (Seismic Bracing for Plumbing Systems).

B. Where special hanging or support of piping or equipment is detailed or shown on the drawings, the drawings shall be followed.

3.4 PAINTING

A. In general, painting will be done by others. Exposed piping and unfinished portions of equipment to be painted shall be cleaned by this Contractor of grease, oil, rust, or dirt in preparation for painting. Spot prime all factory primed surfaces as necessary to repair any damage to finish.

3.5 CONCRETE WORK

A. When required or shown on the drawings concrete work for plumbing shall be performed in accordance with Division 1. This Contractor shall coordinate all requirements accordingly.

3.6 INSTALLATION OF EXPANSION ANCHORS

A. Where permitted in other sections of this specification, expansion anchors may be used in hardened concrete.

B. Job Testing: Load test 50 percent of the expansion anchors on each job to twice 80 percent of the ICBO recommended allowable load in tension for that particular anchor, except that if the design load is less than 75 pounds, only one anchor in ten needs be tested. If any anchor fails, then all anchors shall be tested. Perform the load test in the presence of the Building Inspector.

C. Install drilled-in anchors in existing reinforced concrete, using care and caution to avoid cutting or damaging the existing reinforcing bars. Maintain a minimum clearance of one inch between the reinforcement and the drilled-in anchor.

3.7 INSTALLATION OF CATHODIC PROTECTION

A. Install dielectric unions in the following locations:
   1. In all metallic water and gas service connections to the building within 5 feet of the building wall. Install adjacent to the shutoff valve and above ground wherever possible.
   2. At points of connections where copper water lines connect to steel domestic water heater tanks and other equipment.
   3. At points in piping where dissimilar metal pipes are connected together.
   4. Any special applications shown on the drawings.

B. Where steel or cast iron pipe in the ground connects to copper or brass piping above the ground, the transition from steel or cast iron pipe to the copper or brass pipe shall be made above ground in all cases and in an accessible location where practicable.

C. Where copper or brass piping is connected to steel or cast iron piping and the connection is buried in the ground, the connection shall be covered with coal tar protective tape as specified in section 'Pipes And Pipe Fittings' extending outward a minimum of 5 feet on all pipes from the point of connection. The tape shall have a minimum thickness of 10 mils and a maximum thickness of 12 mils and shall be applied so as to provide at least two full thicknesses of tape over the piping. A primer specifically designed for use with the tape, shall be used. The piping shall be thoroughly cleaned before any tape or primer is applied.

3.8 INSTALLATION OF THERMOMETERS

A. Thermometers for piping systems shall be installed so that the liquid flows completely around the sensing well. Pipe sizes at the bulb shall be increased where necessary to allow for full flow without excessive resistance.

B. Where shown on the temperature control diagrams, the temperature control subcontractor shall furnish and install remote panel-mounted thermometers. Duct-mounted thermometers may be omitted at these locations.

C. Thermometers shall be placed at all locations shown on the drawings.

D. In cases where the specified thermometers cannot be located so as to be easily read, a remote reading type thermometer shall be installed, as approved by the Architect/Engineer.

E. Thermometers provided as part of the temperature control work and located on a control panel need not be duplicated by the requirements listed above.

3.9 INSTALLATION OF GAUGES

A. Provide gauge connections at the following locations:
   1. Suction and discharge of domestic hot water recirculating pumps.
   2. Elsewhere as shown on the drawings.

B. Gauges shall be provided in convenient locations within approximately 3 feet of the flanges or connections and elsewhere as may be shown on the drawings.

C. Gauge Valves and Siphons
   1. A needle point globe valve, Crane No. 88 or equal, shall be installed at each gauge.
   2. A gauge siphon shall be installed at each hot water gauge.

3.10 INSTALLATION OF FLASHINGS

A. Provide pipe flashings as noted on the drawings.

B. Flue and duct flashings and storm collars shall be securely clamped around flue and/or duct storm collars or counter-flashings.

3.11 INSTALLATION OF PIPING SPECIALTIES

A. Pipe Escutcheons: Install pipe escutcheons on each pipe penetration through floors, walls, partitions, and ceilings where penetration is exposed to view and on exterior of building. Secure escutcheon to pipe or insulation so escutcheon covers penetration hole and is flush with adjoining surface.

B. Sleeves: Secure sleeves to metal or wood forms in such a manner that they will not become displaced during pouring of concrete. Fill sleeves on deck with sand. After forms have been removed from concrete, the sleeves shall be removed from the openings.

C. Core drill properly sized holes in the concrete to replace metal sleeves that are crushed or knocked out of position during pouring of concrete.

D. Provide piping passing through concrete fire walls with sleeves of standard black steel pipe nominally one size larger than pipe enclosed, but in the case of insulated pipe, large enough for

insulation to pass through. Caulk space between pipe and sleeve with fire-rated wicking, and provide metal retainer plates at both sides of the wall.

3.12 INSTALLATION OF STRAINERS

A. Install strainers full size of pipeline and in accordance with the manufacturer's installation instructions. Install pipe nipple and shutoff valve in the strainer blow-down connection, full size of the connection, except for strainers 2 inch and smaller installed ahead of control valves feeding individual terminals. Where indicated, provide a drain line from the shutoff valve to the plumbing drain, full size of blow-down connection.

B. Locate strainers in supply line ahead of all pumps, temperature control valves, pressure reducing valves, temperature and pressure regulating valves, and elsewhere as indicated on the drawings if an integral strainer is not included with the equipment:

3.13 INSTALLATION OF VALVES

A. Install valves where required for proper operation of piping and equipment, including valves in branch lines where necessary to isolate sections of piping. Locate valves so as to be accessible and so that separate support can be provided when necessary.

B. Install valves with stems pointed up, in vertical position where possible, but in no case with stems pointed downward from horizontal plane.

C. Provide union at each connection to equipment and downstream of each valve. Provide unions at both ends of valves when valves cannot be turned due to an obstruction.

D. After piping systems have been tested and put into service, but before final testing, adjusting, and balancing inspect each valve for possible leaks. Adjust or replace packing to stop leaks; replace valve if leakage persists.

E. Tag each valve and provide a complete listing of valve locations and functions. In addition, where valves are located above a ceiling or behind an access panel, provide an adhesive clear plastic label with black 3/8” lettering on ceiling grid or access panel identifying valve.

3.14 INSTALLATION OF UNIONS AND FLANGES

A. Install unions and flanges so that piping can be easily disconnected for removal of tanks, equipment, and valves. Provide a minimum of two unions at each three-way valve.

3.15 PIPE IDENTIFICATION

A. Identification shall be applied to all piping, except piping located in furred spaces without access to permit entrance of personnel, and piping buried in the ground or concrete.

B. The legend and flow arrow shall be applied at all valve locations, at all points where piping enters or leaves a wall, partition, cluster of piping, or similar obstruction, and at approximately 20 foot intervals on pipe runs.

C. Practical variations or changes in locations and spacing may be made with the specific approval of the Architect/Engineer to meet specific conditions.

D. Wherever two or more pipes run parallel, the printed legend and other markings shall be applied in the same relative location so that all piping is easily identified.

E. The marking shall be located to be conspicuous from any reasonable vantage point.

F. The legends and flow arrows shall be in the colors as indicated in the pipe marking schedule.

G. Bore field circuit piping in the mechanical room shall be labeled to coincide with the GPS numbering of the bore field.

H. Where different equipment such as fire sprinklers are supplied from a common main, such as a domestic water main, the main should be identified as 'Domestic Water' and each respective branch takeoff as 'Fire Water', etc.

I. The sizes of the stenciled lettering and flow arrows shall be as follows:

Outside Diameter (Inches of Covering)	Size of Stencil Letter	Minimum Length of Flow Arrow
1. 5/8" to 2"	1/2"	3"
2. 2-1/2" to 4"	1"	4"
3. 4"to 7"	2"	5"
4. Over 7"	3"	6"

J. Pipe Marking Schedule:

1. Legend	Color
2. Domestic Cold Water	Green
3. Domestic Hot Water Supply	Yellow
4. Domestic Hot Water Return	Yellow
5. Gas	Yellow
6. Sanitary Sewer	Brown
7. Storm Sewer	Brown
8. Plumbing Vent	Brown
9. Fire Sprinkler	Red

3.16 DEMOLITION WORK

A. Unless specifically indicated otherwise, demolition work shall include removal of all associated equipment, electrical/controls components, conduit, and wiring, piping/valves and accessories, and supports. The surfaces where the demolition work was performed shall be restored to match the adjacent surfaces to the best extent practical.

3.17 ELECTRICAL WORK

A. Adequate working space shall be provided around electrical equipment in compliance with the National Electrical Code and other applicable codes or ordinances. The plumbing work shall be coordinated with the electrical work in order to comply with these requirements. Any work which does not conform to these regulations shall be properly corrected without additional cost to the Owner.

B. Furnish and install all line voltage and low voltage temperature control wiring in the plumbing work (typically performed by the temperature control subcontractor) including all interlock wiring between motor starters, interlock relays, and temperature control equipment. Unless noted

otherwise, this does not include primary control wiring between starters and pushbuttons or other manual starter switch or branch power circuits required for temperature control systems.

1. Starters located in motor control centers will be provided under the electrical work. The Contractor is referred to the electrical drawings for motors served by motor control centers.
2. All such equipment shall be delivered to the electrical contractor for mounting and connecting to power wiring. Coordinate all motor starter requirements with the electrical contractor.
3. Temperature control equipment, including relays shown on control diagrams, shall be furnished and installed by the temperature control subcontractor.
4. Electrical devices with piping connections, such as control valves, insertion thermostats, strap-on aquastats, and similar items which are to be wired under the electrical work or by the temperature control subcontractor, shall be installed by the plumbing contractor.

C. Equipment furnished in this work that is factory wired but requires modification to internal wiring to meet specifications or drawing requirements shall have such internal modifications made at factory before shipment.

D. All electrical work and equipment, including internal wiring, must comply with applicable codes and applicable portions of electrical specifications. Install all line and low voltage control wiring in conduit. Conduit for temperature control wiring shall be responsibility of the plumbing contractor and shall be of type specified in the electrical specifications.

3.18 CARE AND CLEANING

A. Repair or replace broken, damaged, or otherwise defective parts, materials, and work. At completion, carefully clean and adjust all equipment and trim installed as part of this work. Leave systems and equipment in a satisfactory operating condition.

3.19 OPERATION TEST

A. Test each piece of equipment to show that it will operate in accordance with the indicated requirements.

3.20 CLEANING UP

A. Upon completion of the Work remove materials, equipment, apparatus, tools, and the like, and leave the premises clean, neat, and orderly.

END OF SECTION

SECTION 220520 - OPERATION AND MAINTENANCE OF PLUMBING SYSTEMS

PART 1 GENERAL

1.1 CONDITIONS OF THE CONTRACT

A. Sections 220000 (Plumbing) and 220500 (Basic Materials and Methods for Plumbing) are hereby made a part of this section.

1.2 WORK INCLUDED

A. This section consists of general requirements and standard specifications covering certain parts of the plumbing work and is supplemented by other specification sections covering additional work, requirements, and materials specifically applicable to the work of each section. Requirements of subsequent sections of the specifications, if in conflict with these requirements, shall govern.

1.3 OPERATION AND MAINTENANCE INSTRUCTIONS

A. Furnish the Architect/Engineer with two complete sets of typewritten operating and maintenance instructions, descriptive literature, catalog cuts, and diagrams covering all items of operation and maintenance for each and every plumbing system and piece of equipment furnished under these specifications.

B. In addition to the bound hard copies the Contractor shall provide an electronic copy (pdf file).

C. The Contractor shall commence compiling the above data (including obtaining operating and maintenance instruction data, catalog cuts, and diagrams from the manufacturer of the reviewed equipment) immediately upon review of his list of materials, so as not to delay the final installation and acceptance of the work.

D. Bind and index each set in a durable, hardboard binder. Final observation should not be requested until the operating and maintenance binders are submitted and have been reviewed by the Architect/Engineer.

E. Incorporate complete operating instructions including starting, stopping, and description of emergency manual operation methods for the following:
   1. Plumbing Systems
   2. Piping Systems
   3. Temperature Controls
   4. Test Data and Startup Reports

F. Provide charts and diagrams as required.

G. Provide operating manual for all equipment listed in individual sections of the specification.

H. Provide maintenance instructions for each item of individual equipment covering pertinent maintenance data, such as lubricants to be used, frequency of lubrication, inspections required, adjustments required, etc.

I. Provide parts bulletins containing manufacturer's part numbers, instructions, etc. for each item of equipment. Strip bulletins so that useless bulk is avoided.

J. Post service telephone numbers and/or addresses in an appropriate place as designated by the Architect/Engineer.

PART 2 PRODUCTS - NOT APPLICABLE

PART 3 EXECUTION - NOT APPLICABLE

END OF SECTION

SECTION 220530 - HANGERS AND SUPPORTS FOR PLUMBING SYSTEMS

PART 1 GENERAL

1.1 CONDITIONS OF THE CONTRACT

A. The Conditions of the Contract (General, Supplementary, and other Conditions), Section 220000 (Plumbing), and Section 220540 (Seismic Bracing for Plumbing Systems) are hereby made a part of this section.

1.2 GENERAL

A. The following information is for pipe hanger and support layout and design reference only. The actual design of all hangers, supports, and seismic bracing is the responsibility of the Contractor per the following specification sections:
   1. Specification Section 220530 (Hangers and Supports for Plumbing Systems)
   2. Specification Section 220540 (Seismic Bracing for Plumbing Systems)

B. Piping: Hangers and supports for piping shall be designed in accordance with the most current edition of the standards and codes listed below, and with any other applicable standards. In no case shall pipe hangers and supports be placed at intervals that are further apart than the requirements listed in Uniform Plumbing Code Table 313.3 and in Uniform Mechanical Code Table 313.3.

Steel Piping	Maximum Spacing	Reference
1-1/4” and smaller	7 feet	ANSI/MSS SP-69 & SP-58 Tables 3 & 4
1-1/2”	9 feet	ANSI/MSS SP-69 & SP-58 Tables 3 & 4
2”	10 feet	ANSI/MSS SP-69 & SP-58 Tables 3 & 4
2-1/2”	11 feet	ANSI/MSS SP-69 & SP-58 Tables 3 & 4
3”	12 feet	ANSI/MSS SP-69 & SP-58 Tables 3 & 4
3-1/2”	13 feet	ANSI/MSS SP-69 & SP-58 Tables 3 & 4
4”	14 feet	ANSI/MSS SP-69 & SP-58 Tables 3 & 4
5”	16 feet	ANSI/MSS SP-69 & SP-58 Tables 3 & 4
6”	17 feet	ANSI/MSS SP-69 & SP-58 Tables 3 & 4
8”	19 feet	ANSI/MSS SP-69 & SP-58 Tables 3 & 4
10”	22 feet	ANSI/MSS SP-69 & SP-58 Tables 3 & 4
12”	23 feet	ANSI/MSS SP-69 & SP-58 Tables 3 & 4
14”	25 feet	ANSI/MSS SP-69 & SP-58 Tables 3 & 4
Copper Piping	Maximum Spacing	
3/4” and smaller	5 feet	ANSI/MSS SP-69 & SP-58 Tables 3 & 4
1”	6 feet	ANSI/MSS SP-69 & SP-58 Tables 3 & 4
1-1/4”	7 feet	ANSI/MSS SP-69 & SP-58 Tables 3 & 4
1-1/2”	8 feet	ANSI/MSS SP-69 & SP-58 Tables 3 & 4
2”	8 feet	ANSI/MSS SP-69 & SP-58 Tables 3 & 4
2-1/2”	9 feet	ANSI/MSS SP-69 & SP-58 Tables 3 & 4
3”	10 feet	ANSI/MSS SP-69 & SP-58 Tables 3 & 4
3-1/2”	11 feet	ANSI/MSS SP-69 & SP-58 Tables 3 & 4
4”	12 feet	ANSI/MSS SP-69 & SP-58 Tables 3 & 4
5”	13 feet	ANSI/MSS SP-69 & SP-58 Tables 3 & 4

6”	14 feet	ANSI/MSS SP-69 & SP-58 Tables 3 & 4
8”	16 feet	ANSI/MSS SP-69 & SP-58 Tables 3 & 4
Gas Piping	Maximum Spacing	
1/2”	6 feet	International Fuel Gas Code
3/4” & 1”	8 feet	International Fuel Gas Code
1-1/4” and larger	10 feet	International Fuel Gas Code

1.3 SUMMARY

A. Section Includes:
   1. Metal pipe hangers and supports
   2. Thermal hanger shield inserts
   3. Fastener systems
   4. Pipe stands
   5. Equipment stands
   6. Equipment supports

B. Related Requirements: All hangers and support systems shall be designed, selected, and installed by the Contractor to comply with the requirements listed in Section 220540 (Seismic Bracing for Plumbing Piping and Equipment).

C. Costs for hanger, support, and seismic bracing systems complying with the requirements listed herein are the responsibility of the Contractor and shall be included in the Contractor’s bid. No extra cost will be allowed for failure to include the associated costs in the Contractor’s bid.

1.4 SUBMITTALS

A. Refer to Section 013300 - Submittal Requirements for submittal procedures.

B. Product Data: For each type of product.

C. Shop Drawings: Signed and sealed by a qualified professional engineer. Show fabrication and installation details and include calculations for the following (Include product data for all components):
   1. Trapeze Pipe Hangers
   2. Metal Framing (Strut) Systems
   3. Pipe Stands
   4. Equipment Supports

D. Delegated Design Submittal: Provide a delegated design submittal for trapeze hangers indicated to comply with all performance requirements and design criteria, including analysis data signed and sealed by the qualified professional engineer responsible for their preparation.
   1. Details for fabrication and assembly of trapeze hangers.
   2. Design calculations utilized for designing the trapeze hangers.

E. The work of this section shall be coordinated with the requirements for the Contractor furnished seismic design submittal for hangers and supports specified in Section 220540 (Seismic Bracing for Plumbing Piping and Equipment). Design and detailing of seismic bracing, hangers, and supports is the responsibility of the Contractor.

1.5 QUALITY ASSURANCE

A. Structural Steel Welding Qualifications: Qualify procedures and personnel according to AWS D1.1/D1.1M, 'Structural Welding Code - Steel.'

B. Pipe Welding Qualifications: Qualify procedures and operators according to ASME Boiler and Pressure Vessel Code, Section IX.

PART 2 PRODUCTS

2.1 PERFORMANCE REQUIREMENTS

A. Delegated Design: Engage a qualified professional engineer, to design trapeze pipe hangers and equipment supports.

B. Structural Performance: Hangers and supports for plumbing piping and equipment shall withstand the effects of gravity loads and stresses within limits and under conditions indicated according to ASCE Standard 7-16.
   1. Design supports for multiple pipes, including pipe stands, capable of supporting combined weight of supported systems, system contents, and test water.
   2. Design equipment supports capable of supporting combined operating weight of supported equipment and connected systems and components.
   3. Design seismic restraint hangers and supports for piping and equipment.

2.2 METAL PIPE HANGERS AND SUPPORTS

A. Carbon Steel Pipe Hangers and Supports:
   1. Description: MSS SP-58, Types 1 through 58, factory fabricated components.
   2. Galvanized Metallic Coatings: Pre-galvanized, hot dip galvanized, or electro-galvanized.
   3. Non-Metallic Coatings: Plastic coated or epoxy powder coated.
   4. Padded Hangers: Hanger with fiberglass or other pipe insulation pad or cushion to support the bearing surface of the piping.
   5. Hanger Rods: Continuous thread rod, nuts, and washers made of carbon steel.

B. Stainless Steel Pipe Hangers and Supports:
   1. Description: MSS SP-58, Types 1 through 58, factory fabricated components.
   2. Padded Hangers: Hanger with fiberglass or other pipe insulation pad or cushion to support bearing surface of piping.
   3. Hanger Rods: Continuous thread rod, nuts, and washers made of carbon steel.

C. Copper Pipe and Tube Hangers:
   1. Description: MSS SP-58, Types 1 through 58, copper plated steel, factory fabricated components.
   2. Hanger Rods: Continuous thread rod, nuts, and washers made of carbon steel.

2.3 TRAPEZE PIPE HANGERS

A. Description: MSS SP-58, Type 59, shop or field fabricated pipe support assembly made from structural carbon steel shapes with MSS SP-58 carbon steel hanger rods, nuts, saddles, and U-bolts.

2.4 METAL FRAMING (STRUT) SYSTEMS

A. Metal Framing Manufacturers Association (MFMA) Metal Framing Systems:
   1. Manufacturers: Subject to compliance with requirements, available manufacturers offering products that may be incorporated into the Work include the following:
      a. B-line
      b. Unistrut
      c. Flex-Strut
      d. G-Strut
      e. Miro Industries
   2. Description: Shop or field fabricated, pipe support assembly made of steel channels, accessories, fittings, and other components for supporting multiple parallel pipes.
   3. Standard: Comply with MFMA-4 factory fabricated components for field assembly.
   4. Channels: Continuous slotted carbon steel channel with in-turned lips.
   5. Channel Width: Selected for applicable load criteria.
   6. Channel Nuts: Formed or stamped nuts or other devices designed to fit into channel slot and, when tightened, prevent slipping along channel.
   7. Hanger Rods: Continuous thread rod, nuts, and washers made of carbon steel.
   8. Metallic Coating: Zinc dichromate finish applied over an electro-galvanized zinc plating.

2.5 THERMAL HANGER SHIELD INSERTS

A. Manufacturers: Subject to compliance with requirements, available manufacturers offering products that may be incorporated into the Work include the following:
   1. Pipe Shields
   2. nVent/Caddy
   3. Buckaroos
   4. Carpenter & Paterson
   5. Piping Technology & Products
   6. Rilco Manufacturing
   7. Value Engineered Products

B. Insulation Insert Material for Cold Piping: ASTM C552, Type II cellular glass with 100 psi or ASTM C591, Type VI, Grade 1 polyisocyanurate with 125 psi minimum compressive strength and vapor barrier.

C. Insulation Insert Material for Hot Piping: Water repellent treated, ASTM C533, Type I calcium silicate with 100 psi ASTM C552, Type II cellular glass with 100 psi or ASTM C591, Type VI, Grade 1 polyisocyanurate with 125 psi minimum compressive strength.

D. For Trapeze or Clamped Systems: Insert and shield shall cover entire circumference of pipe.

E. For Clevis or Band Hangers: Insert and shield shall cover lower 180 degrees of pipe.

F. Insert Length: Extend 2 inches beyond sheet metal shield for piping operating below ambient air temperature.

G. Structural insert material for hot piping shall be water resistant, high density, calcium silicate with minimum a density of 28 lbs/ft3 and a minimum compressive strength of 900 psi. Structural inserts shall be used as recommended by the manufacturer to meet load ratings.

H. Structural insert material for cold piping shall be water resistant, high density, polyisocyanurate with a minimum density of 14 lbs/ft3 and a minimum compressive strength of 900 psi. Structural inserts shall be used as recommended by manufacturer to meet load ratings.

I. Provide a vapor barrier steel jacket around insulation. Insulation jackets shall be galvanized steel conforming to ASTM A653. Hanger bearing surface shall consist of a galvanized sheet metal insulation protection shield or casing.

J. Thermal hanger supports shall be load rated. Load ratings shall be established by the pipe support manufacturer based upon testing and analysis in conformance with the latest edition of the following codes and standards: ASME B31.1, MSS SP-68, MSS SP-69, and MSS SP-89.

K. Unless otherwise indicated, thermal hanger supports shall be as indicated in the following schedule, or approved equal. The listed model numbers are based on Pipe Shields.
   1. Pipe supported on hangers: Models A2000, A4000, A9000, and D3000 series.
   2. Pipe supported on flat surfaces: Models A2000, A4000, A6000, A7000, A7200, and A7400.
   3. Pipe Supported on pipe rolls: Models A4000, A6000, A8200, and A8400.
   4. Pipe supported on slides and guides: Model B series.
   5. Riser pipe supports: Model E series.

L. The selected model(s) shall conform to pipe service, support style, and support spacing.

M. Pipe support spacing shall be in accordance with the manufacturer's recommendations, but in no case shall exceed the maximum spacing required by ASME B31.1.

2.6 FASTENER SYSTEMS

A. Powder Actuated Fasteners: Threaded steel stud, for use in hardened portland cement concrete with pull-out, tension, and shear capacities appropriate for supported loads and building materials where used.
   1. Manufacturers: Subject to compliance with requirements, available manufacturers offering products that may be incorporated into the Work include the following:
      a. Hilti
      b. ITW Ramset/Red Head
      c. MKT Fastening
      d. Simpson Strong-Tie

B. Mechanical Expansion Anchors: Insert wedge type anchors for use in hardened portland cement concrete; with pull-out, tension, and shear capacities appropriate for supported loads and building materials where used.
   1. Indoor Applications: Zinc-coated stainless steel.
   2. Outdoor Applications: Stainless steel.
   3. Manufacturers: Subject to compliance with requirements, available manufacturers offering products that may be incorporated into the Work include the following:
      a. Hilti
      b. ITW Ramset/Red Head
      c. MKT Fastening
      d. B-line

2.7 PIPE STANDS

A. General Requirements for Pipe Stands: Shop or field fabricated assemblies made of manufactured corrosion resistant components to support roof mounted piping.

B. Compact Pipe Stand
   1. Manufacturers: Subject to compliance with requirements, available manufacturers offering products that may be incorporated into the Work include the following, or approved equal:
      a. Miro Industries
      b. PHP Systems/Design
      c. RectorSeal HVAC
      d. Rooftop Support Systems
   2. Description: Single base unit with integral rod roller, pipe clamps, or V-shaped cradle to support pipe, for roof installation without membrane penetration.
   3. Base: Single, vulcanized rubber, molded polypropylene, or polycarbonate.
   4. Hardware: Galvanized steel or polycarbonate.
   5. Accessories: Protection pads.

C. Low Profile, Single Base, Single Pipe Stand:
   1. Manufacturers: Subject to compliance with requirements, available manufacturers offering products that may be incorporated into the Work include, but are not limited to, the following:
      a. Miro Industries
      b. PHP Systems/Design
      c. Rooftop Support Systems
   2. Description: Single base with vertical and horizontal members, and pipe support, for roof installation without membrane protection.
   3. Base: Single, vulcanized rubber, molded polypropylene, or polycarbonate.
   4. Vertical Members: Two, galvanized stainless steel, continuous thread 1/2 inch rods.
   5. Horizontal Member: Adjustable horizontal, galvanized stainless steel pipe support channels.
   6. Pipe Supports: Roller strut clamps, clevis hanger, or swivel hanger.
   7. Hardware: Galvanized stainless steel.
   8. Accessories: Protection pads.
   9. Height: 12 inches above roof Insert lesser dimension above roof.

D. High Profile, Single Base, Single Pipe Stand:
   1. Manufacturers: Subject to compliance with requirements, available manufacturers offering products that may be incorporated into the Work include, but are not limited to, the following:
      a. Miro Industries
      b. PHP Systems/Design
      c. Rooftop Support Systems
   2. Description: Single base, vertical and horizontal members, and pipe support, for roof installation without membrane penetration.
   3. Base: Single vulcanized rubber or molded polypropylene.
   4. Vertical Members: Two, galvanized stainless steel, continuous thread 1/2 inch rods.
   5. Horizontal Member: One, adjustable height, galvanized stainless steel pipe support slotted channel or plate.
   6. Pipe Supports: Roller strut clamps, clevis hanger, swivel hanger.

7. Hardware: Galvanized stainless steel.
8. Accessories: Protection pads, 1/2 inch continuous thread galvanized steel rod, 1/2 inch continuous thread stainless steel rod.
9. Height: 36 inches above roof Insert lesser dimension above roof.

E. High Profile, Multiple Pipe Stand:
1. Manufacturers: Subject to compliance with requirements, available manufacturers offering products that may be incorporated into the Work include, but are not limited to, the following:
   a. Miro Industries
   b. PHP Systems/Design
   c. RectorSeal HVAC
   d. Rooftop Support Systems
2. Description: Assembly of bases, vertical and horizontal members, and pipe supports, for roof installation without membrane penetration.
3. Bases: Two or more; vulcanized rubber molded polypropylene insert material.
4. Vertical Members: Two or more, galvanized stainless steel channels.
5. Horizontal Members: One or more, adjustable height, galvanized stainless steel pipe supports.
6. Pipe Supports: Roller strut clamps, clevis hanger, swivel hanger.
7. Hardware: Galvanized stainless steel.
8. Accessories: Protection pads, 1/2 inch continuous thread rod.
9. Height: 24 inches above the roof or as indicated on the drawings.

F. Curb Mounted Type Pipe Stands: Shop or field fabricated pipe supports made from structural steel shapes, continuous thread rods, and rollers, for mounting on permanent stationary roof curb.

2.8 EQUIPMENT SUPPORTS

A. Description: Welded, shop or field fabricated equipment support made from structural carbon steel shapes.

2.9 OUTDOOR EQUIPMENT STANDS

A. Manufacturers: Subject to compliance with requirements, available manufacturers offering products that may be incorporated into the Work include, but are not limited to, the following:
1. MIRO Industries
2. RectorSeal HVAC
3. Rooftop Support Systems

B. Description
1. Description: Individual foot supports with elevated adjustable channel cross bars and clamps/fasteners/bolts for ground or roof supported outdoor equipment components, without roof membrane penetration, in a pre-fabricated system that can be modularly assembled on site.
2. Foot Material: Rubber or polypropylene.
3. Rails Material: Hot dip galvanized carbon steel.
4. Wind/Sliding Load Resistance: Up to 120 mph, or as indicated on the structural drawings.

2.10 MATERIALS

A. Aluminum: ASTM B221.

B. Carbon Steel: ASTM A1011/A1011M.

C. Structural Steel: ASTM A36/A36M, carbon steel plates, shapes, and bars; galvanized.

D. Stainless Steel: ASTM A240/A240M.

E. Threaded Rods: Continuously threaded. Zinc plated or galvanized steel for indoor applications and stainless steel for outdoor applications. Mating nuts and washers of similar materials as rods.

F. Grout: ASTM C1107/C1107M, factory mixed and packaged, dry, hydraulic cement, non-shrink and non-metallic grout; suitable for interior and exterior applications.
   1. Properties: Non-staining, non-corrosive, and non-gaseous.
   2. Design Mix: 5,000 psi, 28 day compressive strength.

P3 EXECUTION

3.1 APPLICATION

A. Comply with all requirements in other section of the specifications for firestopping materials and installation for penetrations through fire rated walls, ceilings, and assemblies.

B. Strength of Support Assemblies: Where not indicated, select sizes of components so strength will be adequate to carry present and future static loads within specified loading limits. Minimum static design load used for strength determination shall be weight of supported components plus 200 lbs.

3.2 HANGER AND SUPPORT INSTALLATION

A. Metal Pipe Hanger Installation: Comply with MSS SP-58. Install hangers, supports, clamps, and attachments as required to properly support piping from the building structure.

B. Metal Trapeze Pipe Hanger Installation: Comply with MSS SP-58. Arrange for grouping of parallel runs of horizontal piping, and support together on field fabricated trapeze pipe hangers.
   1. Pipes of Various Sizes: Support together and space trapezes for smallest pipe size or install intermediate supports for smaller diameter pipes as specified for individual pipe hangers.
   2. Field fabricate from ASTM A36/A36M, carbon-steel shapes selected for loads being supported. Weld steel according to AWS D1.1/D1.1M.

C. Thermal Hanger Shield Installation: Install in pipe hanger or shield for insulated piping.

D. Fastener System Installation:
   1. Install powder actuated fasteners for use in lightweight concrete or concrete slabs less than 4 inches thick in concrete after concrete is placed and completely cured. Use operators that are licensed by powder actuated tool manufacturer. Install fasteners according to powder actuated tool manufacturer's operating manual.
   2. Install mechanical expansion anchors in concrete after concrete is placed and completely cured. Install fasteners according to manufacturer's written instructions.

E. Pipe Stand Installation:

1. Pipe Stand Types Except Curb Mounted Type: Assemble components and mount on smooth roof surface. Do not penetrate the roof membrane.
2. Curb Mounted Type Pipe Stands: Assemble components or fabricate pipe stands and mounts on a permanent, stationary roof curb.

F. Install hangers and supports complete with necessary attachments, inserts, bolts, rods, nuts, washers, and other accessories.

G. Equipment Support Installation: Fabricate from welded structural steel shapes.

H. Install hangers and supports to allow controlled thermal and seismic movement of piping systems, to permit freedom of movement between pipe anchors, and to facilitate action of expansion joints, expansion loops, expansion bends, and similar units.

I. Install lateral bracing with pipe hangers and supports to prevent swaying.

J. Install building attachments within concrete slabs or attach to structural steel. Install additional attachments at concentrated loads, including valves, flanges, and strainers, 2-1/2” pipe size and larger and at changes in direction of piping. Install concrete inserts before concrete is placed; fasten inserts to forms and install reinforcing bars through openings at top of inserts.

K. Load Distribution: Install hangers and supports so that piping live and dead loads and stresses from movement will not be transmitted to connected equipment.

L. Pipe Slopes: Install hangers and supports to provide indicated pipe slopes and to not exceed maximum pipe deflections allowed by ASME B31.9 for building services piping.

M. Insulated Piping:
1. Attach clamps and spacers to piping.
   a. Piping Operating above Ambient Air Temperature: Clamp may project through insulation.
   b. Piping Operating below Ambient Air Temperature: Use thermal hanger shield insert with clamp sized to match OD of insert.
   c. Do not exceed pipe stress limits allowed by ASME B31.9 for building services piping.
2. Install MSS SP-58, Type 39, protection saddles if insulation without vapor barrier is indicated. Fill interior voids with insulation that matches adjoining insulation.
   a. Option: Thermal-hanger shield inserts may be used. Include steel weight distribution plate for pipe NPS 4 and larger if pipe is installed on rollers.
3. Install MSS SP-58, Type 40, protective shields on cold piping with vapor barrier. Shields shall span an arc of 180 degrees.
   a. Option: Thermal hanger shield inserts may be used. Include steel weight distribution plate for pipe NPS 4 and larger if pipe is installed on rollers.
4. Shield Dimensions for Pipe: Not less than the following:
   a. 1/2” to 3-1/2” pipe: 12 inches long and 0.048 inch thick.
   b. 4” pipe: 12 inches long and 0.06 inch thick.
   c. 4” and 5” pipe: 18 inches long and 0.06 inch thick.
   d. 8” thru 14” pipe: 24 inches long and 0.075 inch thick.
5. Pipes 8” and Larger: Include wood or reinforced calcium silicate insulation inserts of length at least as long as protective shield.
6. Thermal Hanger Shields: Install with insulation same thickness as piping insulation.

3.3 EQUIPMENT SUPPORTS

A. Fabricate structural steel stands to suspend equipment from structure overhead or to support equipment above floor.

B. Grouting: Place grout under supports for equipment and make bearing surface smooth.

C. Provide lateral bracing to prevent swaying for equipment supports.

3.4 METAL FABRICATIONS

A. Cut, drill, and fit miscellaneous metal fabrications for trapeze pipe hangers and equipment supports.

B. Fit exposed connections together to form hairline joints. Field weld connections that cannot be shop welded because of shipping size limitations.

C. Field Welding: Comply with AWS D1.1/D1.1M procedures for shielded, metal arc welding; appearance and quality of welds; and methods used in correcting welding work; and with the following:
   1. Use materials and methods that minimize distortion and develop strength and corrosion resistance of base metals.
   2. Obtain fusion without undercut or overlap.
   3. Remove welding flux immediately.
   4. Finish welds at exposed connections so no roughness shows after finishing and so contours of welded surfaces match adjacent contours.

3.5 ADJUSTING

A. Hanger Adjustments: Adjust hangers to distribute loads equally on attachments and to achieve indicated slope of pipe.

B. Trim excess length of continuous thread hanger and support rods to 1-1/2 inches.

3.6 PAINTING

A. Touchup: Clean field welds and abraded areas of shop paint. Paint exposed areas immediately after erecting hangers and supports. Use same materials as used for shop painting. Comply with SSPC-PA 1 requirements for touching up field painted surfaces.
   1. Apply paint by brush or spray to provide a minimum dry film thickness of 2.0 mils.

B. Galvanized Surfaces: Clean welds, bolted connections, and abraded areas and apply galvanizing repair paint to comply with ASTM A780/A780M.

3.7 HANGER AND SUPPORT SCHEDULE

A. Specific hanger and support requirements are in Sections specifying piping systems and equipment.

B. Comply with MSS SP-58 for pipe hanger selections and applications that are not specified in piping system Sections.

C. Use hangers and supports with galvanized metallic coatings for piping and equipment that will not have field applied finish.

D. Use nonmetallic coatings on attachments for electrolytic protection where attachments are in direct contact with copper tubing.

E. Use carbon steel pipe hangers and supports metal trapeze pipe hangers and metal framing systems and attachments for general service applications.

F. Use copper plated pipe hangers and copper or stainless steel attachments for copper piping and tubing.

G. Use padded hangers for piping that is subject to scratching.

H. Use thermal hanger shield inserts for insulated piping and tubing.

I. Horizontal Piping Hangers and Supports: Unless otherwise indicated and except as specified in piping system Sections, install the following types:
   1. Adjustable, Steel Clevis Hangers (MSS Type 1): For suspension of non-insulated or insulated, stationary pipes 1/2” thru 30” size.
   2. Yoke Type Pipe Clamps (MSS Type 2): For suspension of up to 1050°F, pipes 4” thru 24” size, requiring up to 4 inches of insulation.
   3. Carbon or Alloy Steel, Double Bolt Pipe Clamps (MSS Type 3): For suspension of pipes 3/4” thru 36” size, requiring clamp flexibility and up to 4 inches of insulation.
   4. Steel Pipe Clamps (MSS Type 4): For suspension of cold and hot pipes 1/2” thru 24” size if little or no insulation is required.
   5. Pipe Hangers (MSS Type 5): For suspension of pipes 1/2” thru 4” size, to allow off center closure for hanger installation before pipe erection.
   6. Adjustable Swivel Split or Solid Ring Hangers (MSS Type 6): For suspension of non-insulated, stationary pipes 3/4” thru 8” size.
   7. Adjustable, Steel Band Hangers (MSS Type 7): For suspension of non-insulated, stationary pipes 1/2” thru 8” size.
   8. Adjustable Band Hangers (MSS Type 9): For suspension of non-insulated, stationary pipes 1/2” thru 8” size.
   9. Adjustable, Swivel Ring Band Hangers (MSS Type 10): For suspension of non-insulated, stationary pipes 1/2” thru 8” size.
   10. Split Pipe Ring with or without Turnbuckle Hangers (MSS Type 11): For suspension of non-insulated, stationary pipes 3/8” thru 8” size.
   11. Extension Hinged or Two Bolt Split Pipe Clamps (MSS Type 12): For suspension of non-insulated, stationary pipes 3/8” thru 3” size.
   12. U-Bolts (MSS Type 24): For support of heavy pipes 1/2” thru 30” size.
   13. Clips (MSS Type 26): For support of insulated pipes not subject to expansion or contraction.
   14. Pipe Saddle Supports (MSS Type 36): For support of pipes 4” thru 36” size, with steel pipe base stanchion support and cast iron floor flange or carbon steel plate.
   15. Pipe Stanchion Saddles (MSS Type 37): For support of pipes 4” thru 36” size, with steel pipe base stanchion support and cast iron floor flange or carbon steel plate, and with U-bolt to retain pipe.
   16. Adjustable Pipe Saddle Supports (MSS Type 38): For stanchion type support for pipes 2-1/2” thru 36” size if vertical adjustment is required, with steel pipe base stanchion support and cast iron floor flange.
   17. Single Pipe Rolls (MSS Type 41): For suspension of pipes 1” thru 30” size , from two rods if longitudinal movement caused by expansion and contraction might occur.

18. Adjustable Roller Hangers (MSS Type 43): For suspension of pipes 2-1/2" thru 24" size, from single rod if horizontal movement caused by expansion and contraction might occur.
19. Complete Pipe Rolls (MSS Type 44): For support of pipes 2" thru 42" size if longitudinal movement caused by expansion and contraction might occur but vertical adjustment is unnecessary.
20. Pipe Roll and Plate Units (MSS Type 45): For support of pipes 2" thru 24" size if small horizontal movement caused by expansion and contraction might occur and vertical adjustment is unnecessary.
21. Adjustable Pipe Roll and Base Units (MSS Type 46): For support of pipes 2" thru 30" size if vertical and lateral adjustment during installation might be required in addition to expansion and contraction.

J. Vertical Piping Clamps: Unless otherwise indicated and except as specified in piping system Sections, install the following types:
   1. Extension Pipe or Riser Clamps (MSS Type 8): For support of pipe risers 3/4" thru 24".
   2. Carbon or Alloy Steel Riser Clamps (MSS Type 42): For support of pipe risers 3/4" thru 24" size if longer ends are required for riser clamps.

K. Hanger Rod Attachments: Unless otherwise indicated and except as specified in piping system Sections, install the following types:
   1. Steel Turnbuckles (MSS Type 13): For adjustment up to 6 inches for heavy loads.
   2. Steel Clevises (MSS Type 14): For 120 to 450°F piping installations.
   3. Swivel Turnbuckles (MSS Type 15): For use with MSS Type 11, split pipe rings.
   4. Malleable Iron Sockets (MSS Type 16): For attaching hanger rods to various types of building attachments.
   5. Steel Weldless Eye Nuts (MSS Type 17): For 120 to 450°F piping installations.

L. Building Attachments: Unless otherwise indicated and except as specified in piping system Sections, install the following types:
   1. Steel or Malleable Concrete Inserts (MSS Type 18): For upper attachment to suspend pipe hangers from concrete ceiling.
   2. Top Beam C-Clamps (MSS Type 19): For use under roof installations with bar-joist construction, to attach to top flange of structural shape.
   3. Side Beam or Channel Clamps (MSS Type 20): For attaching to bottom flange of beams, channels, or angles.
   4. Center Beam Clamps (MSS Type 21): For attaching to center of bottom flange of beams.
   5. Welded Beam Attachments (MSS Type 22): For attaching to bottom of beams if loads are considerable and rod sizes are large.
   6. C-Clamps (MSS Type 23): For structural shapes.
   7. Top-Beam Clamps (MSS Type 25): For top of beams if hanger rod is required tangent to flange edge.
   8. Side Beam Clamps (MSS Type 27): For bottom of steel I-beams.
   9. Steel Beam Clamps with Eye Nuts (MSS Type 28): For attaching to bottom of steel I-beams for heavy loads.
   10. Linked-Steel Clamps with Eye Nuts (MSS Type 29): For attaching to bottom of steel I-beams for heavy loads, with link extensions.
   11. Malleable Beam Clamps with Extension Pieces (MSS Type 30): For attaching to structural steel.

12. Welded Steel Brackets: For support of pipes from below or for suspending from above by using clip and rod. Use one of the following for indicated loads:
13. Light (MSS Type 31): 750 lbs.
14. Medium (MSS Type 32): 1500 lbs.
15. Heavy (MSS Type 33): 3000 lbs.
16. Side Beam Brackets (MSS Type 34): For sides of steel or wooden beams.
17. Plate Lugs (MSS Type 57): For attaching to steel beams if flexibility at beam is required.
18. Horizontal Travelers (MSS Type 58): For supporting piping systems subject to linear horizontal movement where headroom is limited.

M. Saddles and Shields: Unless otherwise indicated and except as specified in piping system Sections, install the following types:
1. Steel Pipe Covering Protection Saddles (MSS Type 39): To fill interior voids with insulation that matches adjoining insulation.
2. Protection Shields (MSS Type 40): Of length recommended in writing by manufacturer to prevent crushing insulation.
3. Thermal Hanger Shield Inserts: For supporting insulated pipe.

N. Spring Hangers and Supports: Unless otherwise indicated and except as specified in piping system Sections, install the following types:
1. Restraint Control Devices (MSS Type 47): Where indicated to control piping movement.
2. Spring Cushions (MSS Type 48): For light loads if vertical movement does not exceed 1-1/4 inches.
3. Spring Cushion Roll Hangers (MSS Type 49): For equipping Type 41, roll hanger with springs.
4. Spring Sway Braces (MSS Type 50): To retard sway, shock, vibration, or thermal expansion in piping systems.
5. Variable Spring Hangers (MSS Type 51): Preset to indicated load and limit variability factor to 25 percent to allow expansion and contraction of piping system from hanger.
6. Variable Spring Base Supports (MSS Type 52): Preset to indicated load and limit variability factor to 25 percent to allow expansion and contraction of piping system from base support.
7. Variable Spring Trapeze Hangers (MSS Type 53): Preset to indicated load and limit variability factor to 25 percent to allow expansion and contraction of piping system from trapeze support.
8. Constant Supports: For critical piping stress and if necessary, to avoid transfer of stress from one support to another support, critical terminal, or connected equipment. Include auxiliary stops for erection, hydrostatic test, and load adjustment capability. These supports include the following types:
    a. Horizontal (MSS Type 54): Mounted horizontally.
    b. Vertical (MSS Type 55): Mounted vertically.
    c. Trapeze (MSS Type 56): Two vertical type supports and one trapeze member.

O. Comply with MSS SP-58 for trapeze pipe hanger selections and applications that are not specified in piping system Sections.

P. Comply with MFMA-103 for metal framing system selections and applications that are not specified in piping system Sections.

Q. Use powder actuated fasteners and mechanical expansion anchors instead of building attachments where required in concrete construction.

END OF SECTION

SECTION 220540 - SEISMIC BRACING FOR PLUMBING SYSTEMS

PART 1 - GENERAL

1.1 CONDITIONS OF THE CONTRACT

A. Section 220000 (Plumbing), Section 220500 (Basic Materials and Methods for Plumbing), and Section 220530 (Hangers and Supports for Plumbing Systems) are hereby made a part of this section.

1.2 GENERAL

A. Seismic bracing for mechanical systems (equipment, ductwork, piping, and conduit) shall comply with all applicable requirements of the 2018 International Building Code (IBC) including all applicable provisions of the American Society of Civil Engineers (ASCE) Minimum Design Loads for Buildings and Other Structures (ASCE Standard 7-16). Basic seismic design criteria for each project shall be as listed on the structural drawings for that project.

B. Compliance with the applicable seismic bracing requirements shall be accomplished utilizing the most current version of one of the following design manuals, or approved equal.
   1. International Seismic Application Technology (ISAT) Design Manual
   2. Mason Industries Seismic Restraint Design Manual
   3. Vibro-Acoustics Seismic Design Manual

C. Component Importance Factors (Ip) for all mechanical equipment, ductwork, piping, and conduit shall be determined and assigned in accordance with ASCE Standard 7-16 Section 13.1.3.

D. Anchorage calculations for seismic roof curbs shall be included in seismic roof curb submittal, including a stamped plan or detail showing the anchorage requirement. This detail shall include specific anchor type, diameter, embedment and layout or spacing. The anchorage calculation shall show compliance with the American Concrete Institute (ACI) where anchoring to concrete for the specific loads and conditions present, including project specific calculations for anchors, clips, and fasteners.

E. The work of this section shall be coordinated with the requirements for the Contractor furnished delegated design submittal for hangers and supports specified in Section 220530 (Hangers and Supports for Plumbing Piping and Equipment). Design and detailing of seismic bracing, hangers, and supports is the responsibility of the Contractor.

1.3 SUBMITTALS

A. Refer to Section 013300 - Submittal Requirements for submittal procedures.

B. The Contractor shall provide the required number of seismic shop drawing submittal sets for review and approval by the Engineer. Submittals shall include a comprehensive set of shop drawings clearly depicting the seismic bracing requirements for all equipment, ductwork, piping, and conduit. Any equipment that does not require seismic bracing shall be specifically identified in the submittal, and the reason for exemption shall be provided. Cite any and all references for the exemption.

C. Submittals shall be fully coordinated with the structural drawings and shall include all applicable structural attachment details. Seismic bracing shop drawings shall include all vertical support anchorage loads and all seismic bracing anchorage loads. Each specific load shall be indicated and

the structural element that the support is attached to shall be clearly depicted/identified. Seismic bracing submittals shall be stamped and signed by a structural or civil engineer with current registration licensed in the State of Nevada.

D. Seismic shop drawing submittals will be reviewed by both the design mechanical engineer and the design structural engineer.

1.4 SITE VISITS (QUALITY CONTROL)

A. An authorized representative of the seismic bracing system manufacturer shall visit the job site during the construction period to confirm that the seismic bracing installation complies with the shop drawings, with all applicable code requirements, and with the seismic bracing system manufacturer's written installation requirements and associated details. As a minimum, an authorized representative shall visit the site when the seismic bracing installation is complete (and prior to installation of the ceilings).

B. A written report shall be issued within one week the site visit summarizing the observations made during the site visit and listing all required corrective actions and/or deficiencies. The report shall be made available to both the design mechanical engineer and the design structural engineer.

C. After all equipment installation is complete and all seismic bracing has been verified, the authorized representative that conducted the field verification shall issue a letter certifying that the installation is complete and that the installation complies with the specified requirements

D. Site visits shall be coordinated with the Owner and shall be scheduled in writing a minimum of one week prior to the proposed site visit date.

PART 2 PRODUCTS – NOT APPLICABLE

PART 3 EXECUTION – NOT APPLICABLE

END OF SECTION

SECTION 220700 - PLUMBING INSULATION

PART 1 - GENERAL

1.1 CONDITIONS OF THE CONTRACT

A. Sections 220000 (Plumbing) and 220500 (Basic Materials and Methods for Plumbing) are hereby made a part of this section.

1.2 WORK INCLUDED:

A. Types of plumbing insulation specified in this section include the following:
   1. Domestic Cold Water Piping
   2. Domestic Hot Water Supply and Return Piping
   3. Non-Potable Cold Water Piping (Indoors)
   4. Non Potable Cold Water Piping (Outdoors)
   5. Rainwater Piping and Roof Drain Sumps
   6. ADA Compliant Plumbing Fixtures
   7. Removable Insulation Jackets
   8. Equipment Insulation

1.3 QUALITY ASSURANCE

A. Manufacturer's Qualifications: Firms regularly engaged in manufacture of plumbing insulation products, of types and sizes required, whose products have been in satisfactory use in similar service for not less than 3 years.

B. Installer's Qualifications: A firm with at least 5 years successful installation experience on projects with mechanical insulations similar to that required for this project.

C. Install thermal insulation products on equipment in accordance with manufacturer's written instructions and in accordance with recognized industry practices to ensure that insulation serves its intended purpose.

D. Flame/Smoke Ratings: For insulation installed inside the building provide composite mechanical insulation (insulation, jackets, coverings, sealers, mastics, and adhesives) with a flame spread rating of 25 or less and a smoke developed index of 50 or less, as tested by the ASTM E84 (NFPA 255) method.

1.4 SUBMITTALS:

A. Refer to Section 013300 - Submittal Requirements for submittal procedures.

B. Product Data: Submit manufacturer's technical product data and installation instructions for each type of mechanical insulation. Submit schedule showing manufacturer's product number, k-Value, thickness, density, and furnished accessories for each plumbing system requiring insulation. Include complete description of installation methods with this submittal.

PART 2 - PRODUCTS

2.1 PIPE INSULATION MATERIALS

A. General: All pipe insulation conductivities and thicknesses shall meet or exceed the requirements listed in International Energy Conservation Code Table C403.11.3.

B. Kitchens, Hospitals, and Pharmacies: For insulated piping exposed in kitchen, hospital, and/or pharmacy areas the aluminum jacketing listed in the following sections shall be replaced with T-304 stainless steel jacketing.

C. Aluminum Jacketing shall be provided on exposed piping and shall be Johns Manville 'JM Aluminum Jacketing' with 'Polyfilm Moisture Barrier' and stucco-embossed finish, or approved equal, and shall be provided where indicated, in the following thicknesses:
   1. For Insulation Outside Diameters under 8 inches: .016 inch thick jacketing
   2. For Insulation Outside Diameters 8 inch and larger: .020 inch thick jacketing

D. Exposed in all piping applications shall mean any exposed pipe in a mechanical room or mezzanine area that is less than 8'-0" above finished floor.

E. Fiberglass Insulation:
   1. Fiberglass insulation shall be Johns Manville Microlok HP, or equal, with factory-applied fire-retardant ASJ jacket, self-sealing laps, and shall be applied per the manufacturer's written recommendations. Conductivity shall be .24 Btu-in/(hr-ft2-°F) at 100°F.
   2. Insulate and cover all fittings with Johns Manville Zeston Series 2000 pre-molded fitting covers secured with serrated tacks, adhesive, and/or Zeston Z-Tape.
   3. Install a segment of rigid calcium silicate insulation at each pipe hanger for pipe sizes 2-1/2 inches and larger.
   4. Finish all cold fittings with Zeston Z-tape to provide a vapor-tight seal.
   5. Seal all raw ends of insulation with Childers CP-10 weather barrier sealant, or approved equal.
   6. Available Manufacturers: Subject to compliance with requirements, manufacturers offering products which may be incorporated in the work include the following, or approved equal:
      a. Johns Manville
      b. CertainTeed
      c. Owens Corning

F. Closed Cell Polyisocyanurate Insulation with Aluminum Jacketing:
   1. Closed cell polyisocyanurate insulation shall be Trymer 25-50, or approved equal. Install per manufacturer's recommendations. Insulation shall have a less than 25/50 flame spread and smoked developed rating in accordance with ASTM E84. Conductivity shall be .190 Btu-in/(hr-ft2-°F) at 75°F. Insulation shall be rated for applications up to 300°F.
   2. Jacketing: Cover pipe and fitting insulation with .016" thick stucco-embossed aluminum jacketing with 'Polyfilm Moisture Barrier'. Install per manufacturer's recommendations.
   3. Finish all cold fittings as required to provide a vapor-tight seal.
   4. Secure all insulation jacketing with T-304 stainless steel bands at 12" on center.
   5. Available Manufacturers: Subject to compliance with requirements, manufacturers offering products which may be incorporated in the work include the following:
      a. Johns Manville ITW Insulation Systems

2.2 DOMESTIC COLD WATER (INDOORS)

A. Insulate exposed domestic cold water piping with fiberglass insulation covered with aluminum jacketing and aluminum fitting covers.

B. Insulate concealed domestic cold water piping with fiberglass insulation. Do not insulate unions, valves, and exposed runouts to fixtures served with domestic cold water piping.
   1. Minimum Insulation Thickness:
      a. Piping 1-1/4 inch and smaller: 1/2 inch
      b. Piping 1-1/2 inch and larger: 1 inch

2.3 DOMESTIC HOT WATER (INDOORS)

A. Insulate exposed domestic hot water supply and return piping with fiberglass insulation covered with aluminum jacketing and aluminum fitting covers.

B. Insulate concealed domestic hot water supply and return piping with fiberglass insulation. Do not insulate unions, valves, and exposed runouts to fixtures in domestic hot water piping.
   1. Minimum Insulation Thickness:
      a. Piping 1 inch and smaller: 1 inch
      b. Piping 1-1/4 inch and larger: 1-1/2 inches

2.4 NON-POTABLE COLD WATER PIPING (INDOORS)

A. Insulate exposed non-potable cold water piping with fiberglass insulation covered with aluminum jacketing and aluminum fitting covers.

B. Insulate concealed non-potable cold water piping with fiberglass insulation.
   1. Minimum Insulation Thickness:
      a. Piping 1-1/4 inch and smaller: 1/2 inch
      b. Piping 1-1/2 inch and larger: 1 inch

2.5 NON-POTABLE COLD WATER PIPING (OUTDOORS)

A. Insulate non-potable cold water piping installed outdoors with closed cell polyisocyanurate insulation covered with aluminum jacketing and aluminum fitting covers. Provide heat tracing where indicated on the drawings.
   1. Minimum Insulation Thickness (All pipe sizes): 1 inch

2.6 RAINWATER PIPING (INDOORS)

A. Insulate rainwater piping with fiberglass insulation. Insulate fittings using Zeston Z-tape. Provide heat tracing where indicated on the drawings.
   1. Minimum Insulation Thickness (All pipe sizes): 1 inch

B. Insulate roof drain sumps with a heavy coating of insulating mastic.

C. Overflow roof drain sumps and piping from overflow roof drains do not require insulation.

2.7 RAINWATER PIPING (OUTDOORS)

A. Insulate rainwater piping installed outdoors with closed cell polyisocyanurate insulation covered with aluminum jacketing and aluminum fitting covers. Provide heat tracing where indicated on the drawings.

1. Minimum Insulation Thickness (All pipe sizes): 1 inch

B. Insulate roof drain sumps with a heavy coating of insulating mastic.

C. Overflow roof drain sumps and piping from overflow roof drains do not require insulation.

2.8 ADA COMPLIANT PLUMBING FIXTURES

A. Insulate domestic hot water, domestic cold water, and waste piping below ADA compliant plumbing fixtures with Plumberex Pro-Extreme pipe covers, or approved equal. Covers shall be manufactured of 1/8 inch thick PVC with anti-microbial, anti-fungal, and UV-resistant properties. Covers shall have vandal resistant snap fasteners and shall comply with ASME A112.18.9.

2.9 EQUIPMENT INSULATION MATERIALS

A. General: All equipment insulation R-Values and thicknesses shall meet or exceed the requirements listed in International Energy Conservation Code Section C403.11.3.

B. Water Heating Equipment
   1. Insulate all water heating equipment operating at increased surface temperatures and which does not have factory-applied insulation, including heating water system air separators. Do not insulate heating water expansion tanks or heating water pumps.
   2. Flat insulation shall be 3 lb density fiberglass board with thickness as required for the operating temperature of the associated fluid inside the equipment. Insulation shall be Johns Manville Series 800 Spin-Glas with reinforced FSK jacket, Owens Corning Series 700 fiberglass board insulation with reinforced FSK jacket, or approved equal.
   3. Curved insulation shall be 2.5 lb density semi-rigid fiberglass with thickness as required for the operating temperature of the associated fluid inside the equipment. Insulation shall be Johns Manville Micro-Flex large diameter pipe and tank insulation with reinforced FSK jacket, Owens Corning large diameter pipe and tank insulation with reinforced FSK jacket, or approved equal.
   4. Available Manufacturers: Subject to compliance with requirements, manufacturers offering products which may be incorporated in the work include the following:
      a. Johns Manville
      b. Owens Corning

C. Removable Insulating Jackets
   1. Insulation and jacket material shall be rated for the operating temperature of the equipment and/or fluid being insulated. Insulating jackets shall be removable and reusable, thermal and acoustical insulating jackets, constructed of minimum 18 ounce material, and sewn with Kevlar thread.
   2. Jackets for hot water applications shall be fabricated with PTFE-coated fiberglass fabric inner and outer material and minimum 1” thick needled fiberglass insulation (see pipe insulation section for required thickness based on pipe size and temperature).
   3. Jackets for cold water applications shall be fabricated with PTFE-coated fiberglass fabric inner and outer material and 1” thick needled fiberglass insulation.
   4. Insulating jackets shall be secured with stainless steel d-rings with straps and Velcro fasteners.
   5. Available Manufacturers: Subject to compliance with requirements, manufacturers offering products which may be incorporated in the work include the following:
      a. Insultech

b. MIT International
c. Thermal Energy Products

6. Removable insulating jackets shall be provided for the following items.
   a. Motorized control valves located indoors and/or outdoors.
   b. Flanged valves located indoors and/or outdoors.

D. Ice Machines: Insulate all ice machine drain piping which does not have factory-applied insulation with fiberglass Insulation. Insulation is not required on ice machine overflow drain piping. Minimum Insulation Thickness for all pipe sizes: 1/2 inch.

E. Manholes and Handholes: Manholes and handholes shall be made accessible by beveling the insulation around the manhole, and covering the manhole with a removable insulating fiberglass blanket, same thickness as the adjacent equipment insulation. Manhole and handhole covers shall be finished the same as the tank covering.

PART 3 - EXECUTION

3.1 INSTALLATION OF PIPING INSULATION

A. The term 'piping' used herein shall include pipe, valves, strainers, and fittings. Apply insulating cements to fittings, valves, and strainers, and trowel smooth to the thickness of adjacent covering. Covering on valves shall extend up to the bonnet. The covering cement shall be of the types herein specified

B. Install insulation products in accordance with manufacturer's written instructions and in accordance with recognized industry practices to ensure that insulation serves its intended purpose.

C. Install insulation on pipe systems subsequent to installation of heat tracing, testing, and acceptance of tests.

D. Install insulation materials with smooth and even surfaces. Insulate each continuous run of piping with full length units of insulation, with single-cut pieces to complete each run. Do not use cut pieces or scraps abutting each other.

E. Clean and dry pipe surfaces prior to insulating. Butt insulation joints firmly together to ensure complete and tight fit over surfaces to be covered.

F. Extend piping insulation without interruption through walls, floors, and similar penetrations, except where otherwise indicated.

G. Install pipe hangers on the outside of the insulation and not in contact with the pipe.

3.2 CARE AND CLEANING

A. Repair or replace broken, damaged, or otherwise defective insulation. Leave entire work in condition satisfactory to Architect. At completion, carefully clean equipment installed as part of this work. Leave systems and equipment in a satisfactory operating condition.

3.3 CLEANING UP

A. Upon completion of the Work remove materials, equipment, apparatus, tools, and the like, and leave the premises clean, neat, and orderly.

END OF SECTION

SECTION 220800 - TESTING, ADJUSTING, AND BALANCING OF PLUMBING SYSTEMS

PART 1 - GENERAL

1.1 CONDITIONS OF THE CONTRACT

A. Sections 220000 (Plumbing) and 220500 (Basic Materials and Methods for Plumbing) are hereby made a part of this section.

1.2 WORK INCLUDED

A. Temperature performance testing on all heat transfer equipment and/or components.

B. Test and balance of plumbing distribution systems and associated equipment and apparatus.

C. Testing, setting, and adjusting speed and volume of systems, recording data, conducting tests, preparing and submitting reports, and recommending modifications to work as required by the contract documents.

D. Component types of testing, adjusting, and balancing specified in this section includes the following as applied to plumbing equipment:
   1. Plumbing Pumps
   2. Balancing Valves for Plumbing Systems

1.3 QUALITY ASSURANCE

A. Balance Agency: Provide services and facilities of an independent agency that specializes in testing, analysis, and balancing of hydronic systems and air distribution for heating and cooling systems. Work shall be done by qualified engineering technicians and trained personnel, using instruments certified accurate to limits used in standard practice for testing and balancing of hydronic and air distribution for heating and cooling systems. The agency shall field test air and hydronic flows in accordance with methods prescribed by the Associated Air Balance Council, National Standard Volume 1, latest edition.

B. The balance agency shall be a member of the Associated Air Balance Council. Subject to compliance with requirements, the balance agency shall be one of the following:
   1. RS Analysis
   2. Raglen System Balance

C. The balance agency shall submit the results of tests in this section to the Architect/Engineer for review and acceptance.

D. AABC Compliance: Comply with AABC 'National Standards' Volume 1, as applicable to plumbing systems and associated equipment and apparatus.

E. Industry Standards: Comply with ASHRAE recommendations pertaining to measurements, instruments, and testing, adjusting and balancing, except as otherwise indicated.

F. Reference Standards:
   1. AABC (Associated Air Balance Council) AABC National Standards Volume 1
   2. ASHRAE (American Society of Heating, Refrigerating, and Air Conditioning Engineers)

G. Test Instruments: Utilize test instruments and equipment for the test and balance work required, of type, precision, and capacity as recommended in AABC National Standards Volume 1.

1.4 SUBMITTALS

A. Refer to Section 013300 - Submittal Requirements for submittal procedures.

B. Provide a test and balance agenda that includes step-by-step testing and balancing procedures, test sheets, and schematic drawings, all being specific to the project.

C. Provide submittals to indicate the extent of work proposed. Submit certified test reports as hereinafter specified signed by test and balance technician/supervisor that performed test and balance work.

D. Include identification and types of instruments used and their most recent calibration date with submission of final test report.

E. The completed balance report shall be submitted for review and approval prior to requesting final observation of the project.

1.5 GENERAL REQUIREMENTS

A. The balance agency shall perform the following during the installation phase of systems:
   1. Study design drawings and specifications and prepare a schedule to physically inspect plumbing equipment and devices to be tested and balanced. The Contractor shall provide the balance agency with one copy of the contract drawings and specifications, plumbing equipment submittals, and change orders necessary for proper balancing of plumbing systems.
   2. The balance agency shall make field inspections prior to closing in portions of systems to be balanced. Agency shall verify to its satisfaction that all work, fittings, dampers, balancing devices, etc. are properly fabricated and installed as shown or specified and that Agency will be able to properly balance system.
   3. Prepare a testing and balancing schedule, test record forms, and necessary technical information regarding the plumbing systems and equipment.
   4. Provide written documentation when the above noted items have been completed. A single page letter signed off by the plumbing contractor and the test and balance agency will suffice.
   5. Recommend adjustments and/or corrections to plumbing equipment and piping systems that are necessary for proper balancing of systems. Provide written documentation of the recommended items to the Architect/Engineer for review.

PART 2 - PRODUCTS (NOT USED)

PART 3 - EXECUTION

3.1 BALANCING

A. Upon completion of plumbing systems, the test and balance agency shall complete tests, analysis, and balance of plumbing systems and equipment as appropriate.

B. This report shall include as minimum, but not be limited to (following design and actual information):
   1. Motors and Pumps: Horsepower, brake horsepower, revolutions per minute, actual amperage, and full load rated amperage.

2. Pumps: Suction and discharge pressures.
3. Other information required to establish completely balanced systems.

END OF SECTION

SECTION 220900 - PLUMBING FIXTURES AND TRIM

PART 1 - GENERAL

1.1 CONDITIONS OF THE CONTRACT

A. Sections 220000 (Plumbing) and 220500 (Basic Materials and Methods for Plumbing) are hereby made a part of this section.

1.2 WORK INCLUDED

A. Types of plumbing fixtures specified in this section include the following:
   1. Water Closets
   2. Urinals
   3. Lavatories
   4. Mop Sinks
   5. Sinks
   6. Showers
   7. Drinking Fountains

1.3 QUALITY ASSURANCE

A. Plumbing Fixture Standards: Comply with applicable portions of the following codes and requirements for all work in this section:
   1. American National Standards Institute
   2. Federal Standards

B. All plumbing components within the waterways shall comply with the following:
   1. Safe Drinking Water Act
   2. No Lead Restrictions of ANSI/NSF Standard 61 Section 9

1.4 SUBMITTALS

A. Refer to Section 013300 - Submittal Requirements for submittal procedures.

B. Product Data: Submit manufacturer's technical product data for plumbing fixtures and trim, including catalog cut of each fixture type and trim item furnished.

C. Operation and Maintenance Data: Submit operation and maintenance data and replacement material lists for each type of material listed in this section. Include this data and product data in the operation and maintenance manual.

1.5 PRODUCT DELIVERY, STORAGE, AND HANDLING

A. Handle plumbing fixtures carefully to prevent breakage, chipping, and scoring the fixture finish. Do not install damaged plumbing fixtures; replace and return damaged units to equipment manufacturer.

PART 2 - PRODUCTS

2.1 GENERAL REQUIREMENTS FOR PLUMBING FIXTURES

A. All fixtures shall be first class in every respect. Accurately line up finished plumbing. Take special care with the rough-in and finished plumbing where batteries of fixtures occur.

B. Consult architectural drawings, as well as plumbing drawings for locations, dimensions, and mounting heights of plumbing fixtures.
   1. Take location and mounting heights for rough-in from architectural drawings.
   2. Follow schedule on plumbing drawings for rough-in connections. Set rough-in for all fixtures exactly per measurements furnished by the manufacturers of the fixtures used.
   3. Rough-in for lavatories and sinks shall be brought in through the wall under the centerline of the drain from the fixture wherever possible and as close to the fixture as possible.

C. Provide all water supplies to fixtures with compression shutoff stops with IPS inlets, threaded brass nipples at pipe connection, and a lock-shield loose key. Provide combination fixtures with a compression stop on each water supply fitting. Provide loose key handle for each stop. Provide 1/2 inch rigid risers for all fixtures unless otherwise noted.

D. Furnish shutoff valves on hose bibbs directly connected to mains with no intervening valves.

E. Except where otherwise specified, all finish for exposed metal trim on fixture shall be polished chromium plated. This also applies to wall flanges, nuts, and washers. Handles on all faucets and stops shall be all metal chromium plated.

F. Make connection between fixtures and flanges on soil pipe absolutely gas tight and water tight with neoprene type gaskets (wall hung fixtures) or bowl wax (floor outlet fixtures). Rubber gaskets or putty will not be permitted.

G. Provide fixtures not having integral traps with P-traps of chromium plated cast brass body without cleanout connected to concealed waste in wall and sanitary fittings. Provide fixtures with a 17 gauge minimum traps and tailpiece and grid drain unless otherwise noted.

H. Available Manufacturers: Subject to compliance with requirements, manufacturers offering traps which may be incorporated in the work include the following, or approved equal:
   1. McGuire Manufacturing
   2. Dearborn Brass

I. Unions on waste pipes on fixture side of traps may be slip or flange joints with soft rubber or lead gaskets.

2.2 PLUMBING FIXTURE HANGERS AND SUPPORTS

A. Properly install and support plumbing fixtures as required and specified herein.

B. Carriers and supports shall be J.R. Smith, Zurn, Mifab, or equal as recommended by the manufacturer for the particular installation and type of fixture being installed. Residential type fixture supports are not acceptable.

C. Install wall mounted water closets with combination support and waste fittings, with feet of support securely anchored to floor.

D. Install floor mounted water closets with J.R. Smith, Mifab, or equal cast iron closet flanges with brass bolts, nuts, washers, and porcelain caps.

E. Install the following fixtures on concealed support with feet of support securely anchored to floor. Anchor top of support to wall construction in an approved manner.
   1. Wall mounted urinals
   2. Drinking fountains

F. Install wall hung lavatories in stud walls with concealed arms and floor support, with feet of support securely anchored to the floor. In addition, anchor top of support to wall construction in an approved manner.

G. Support multiple faucet wash basins by welding 6” steel plates directly behind the 16 gauge wall studs, drilling pilot holes into the plates, fastening the sink bracket to the plate using 3/8” self-tapping screws, and then using 6” flat strap for the other attachment locations.

2.3 PLUMBING FIXTURES

A. Fixtures shall be American Standard, Sloan, Kohler, Haws, Elkay, Just, Acorn, or approved equal.

B. Fixture manufacturer and model shall be as scheduled on the drawings, complete with all components and accessories as illustrated and described. Provide stops for all concealed supplies.

C. Flush valves used at handicapped water closets shall be mounted on the wide side of the toilet enclosure.

D. All water coolers, drinking fountains, and hydration stations shall include integral water filters that are accessible from the front of the enclosure.

2.4 WATER CLOSET SEATS

A. Provide seats for standard elongated bowls with self-sustaining check hinges, stainless steel posts, white color.

PART 3 - EXECUTION

3.1 INSPECTION AND PREPARATION

A. Examine rough-in work of domestic water and waste piping systems to verify actual locations of piping connections prior to installing fixtures. Also examine floors, substrates, and conditions under which fixture work is to be accomplished. Correct any incorrect locations of piping and other unsatisfactory conditions for installation of plumbing fixtures. Do not proceed with work until all unsatisfactory conditions have been corrected.

3.2 INSTALLATION

A. Install plumbing fixtures of types indicated where shown and at mounting height indicated on Architectural Drawings in accordance with fixture manufacturer's written instructions, rough-n drawings, and with recognized industry practices. Ensure that plumbing fixtures comply with requirements and serve intended purposes. Comply with applicable requirements of the Uniform Plumbing Code pertaining to installation of plumbing fixtures.

B. In all cases where plumbing fixtures are mounted on or against building walls of concrete or other materials having relatively rough or non-planar surfaces, it shall be the responsibility of this Contractor to provide any necessary grout or backing materials required to facilitate fixture mounting and eliminate void spaces between fixtures and wall to ensure adequate bearing contact.
   1. On completion of installation provide silicone sealer at all points of fixture contact with walls or floors.

C. Any fixture broken, cracked, or otherwise damaged during installation shall be replaced by the Contractor at his own expense.

3.3 TRAPPING AND VENTING OF FIXTURES

A. Trap and vent all plumbing fixtures in accordance with the Uniform Plumbing Code, whether or not shown on the drawings. Strictly adhere to any and all local codes. The only exceptions (which require specific written approval) will be those fixtures which are specially noted herein or on the drawings to be provided with special wastes.

B. No vent shall intersect another vent at a point less than 6 inches above the extreme overflow level of highest fixture served.

C. Take vents off the top half of horizontal runs and grade so as to free vents quickly of any water or condensation.

3.4 ADJUSTMENT OF PLUMBING PIPING SYSTEM

A. Test and adjust all flush valves so that each fixture receives the proper amount of water. Regulate all faucets, bibbs, drinking fountains, etc. to the approval of the Architect/Engineer so that the entire system is left in a first class condition.

B. Clean fixtures, equipment, and materials installed under this contract. Remove any/all cement, plaster, paint, rust, etc. Also remove any/all dirt, rubbish, paint spots, or grease on walls or fixtures for which this Contractor is responsible.

3.5 CLEANING AND PROTECTION

A. Clean plumbing fixtures of all dirt and debris upon completion of installation.

B. Protect installed fixtures from dirt and damage during the remainder of the project.

3.6 FIELD QUALITY CONTROL

A. Upon completion of installation of plumbing fixtures and after units are water pressurized, test fixtures to demonstrate capability and compliance with requirements. When possible, correct malfunctioning units at site, then retest to demonstrate compliance; otherwise, remove and replace with new units and proceed with retesting.

B. Inspect each installed unit for damage to finish. When feasible, restore and match finish to the original at site. Otherwise, remove the fixture and replace with a new unit. Feasibility and match to be judged by the Architect/Engineer. Remove any cracked or dented units and replace with new units.

3.7 EXTRA STOCK

A. Furnish special wrenches and other devices necessary for servicing plumbing fixtures and trim to the Owner with receipt. Furnish one device for every 10 units.

3.8 OPERATION TEST

A. Test each piece of equipment to show that it will operate in accordance with the indicated requirements.

3.9 CLEANING UP

A. Upon completion of the Work remove materials, equipment, apparatus, tools, and the like, and leave the premises clean, neat, and orderly.

END OF SECTION

SECTION 221000 - FACILITY WATER DISTRIBUTION

PART 1 - GENERAL

1.1 CONDITIONS OF THE CONTRACT

A. Sections 220000 (Plumbing) and 220500 (Basic Materials and Methods for Plumbing) are hereby made a part of this section.

1.2 WORK INCLUDED

A. Types of plumbing piping materials and components specified in this section include the following:
   1. Materials and Products
   2. Basic Pipes and Fittings
   3. Thrust Blocks
   4. Basic Valves
   5. Hose Bibbs
   6. Hydrants
   7. Backflow Preventers
   8. Point-of-Use Mixing Valves
   9. Electronic Mixing Valves
   10. Emergency Eyewash/Shower Assemblies
   11. Water Hammer Arrestors
   12. Trap Primers
   13. Electronic Trap Primers
   14. Expansion Tanks for Potable Water
   15. Commercial Clothes Washers

1.3 QUALITY ASSURANCE

A. Manufacturer's Qualifications: Firms regularly engaged in manufacture of plumbing piping systems products, of types, materials, and sizes required, whose products have been in satisfactory use in similar service for not less than 5 years.

B. Contractor's Qualifications: Firm with at least 5 years of successful installation experience on projects with piping systems work similar to that required for this project.

C. Plumbing Code Compliance: Comply with applicable portions of the Uniform Plumbing Code pertaining to selection and installation of plumbing materials and products.

1.4 SUBMITTALS

A. Refer to Section 013300 - Submittal Requirements for submittal procedures.

B. Product Data: Submit manufacturer's technical product data and installation instructions for plumbing piping systems materials and products.

C. As-Built Drawings: At project closeout, submit as-built drawings of installed piping systems.

D. Operation and Maintenance Data: Submit operation and maintenance data and parts lists for plumbing piping systems materials and products. Include this data, product data, shop drawings, and record drawings in the operation and maintenance manual.

PART 2 - PRODUCTS

2.1 MATERIALS AND PRODUCTS

A. Provide piping materials and factory-fabricated piping products of sizes, types, pressure ratings, temperature ratings, and capacities as indicated. Provide materials and products complying with the Uniform Plumbing Code. Where more than one type of material or product is indicated, selection is the Contractor's option.

2.2 BASIC PIPES AND PIPE FITTINGS

A. Provide pipe and pipe fittings complying with Section 220500 (Basic Materials and Methods for Plumbing) and in accordance with the following listing:
   1. Interior Water Piping (and Exterior Water Piping Exposed Above Grade):
      a. Pipe Size 2 inches and Smaller: Copper tube; Type L, hard drawn temper; with wrought copper fittings and solder joints.
      b. Pipe Size 2-1/2 inches and Larger: Copper tube; Type L, hard drawn temper; with wrought copper fittings and brazed joints.
   2. Exterior Water Piping Below Grade:
      a. Below Grade Pipe 3 inch and Smaller: Copper tube; Type K, hard drawn temper; with wrought copper fittings and with brazed joints.
      b. Below Grade Pipe 4 inch through 12 inch: Polyvinyl chloride (PVC) water pipe; Class 150, DR-18, with cast iron or ductile iron fittings, and ring-tite joints. Pipe shall be listed as AWWA C900.
   3. Water Piping Below Building Slab and/or other Concrete Slab:
      a. Below Grade Pipe 2 inch and Smaller: Copper tube; Type K soft copper; with no fittings.
      b. Below Grade Pipe 2-1/2 inch and Larger shall be one of the following:
         1) Copper tube; Type L, hard drawn temper; with wrought copper fittings and brazed joints.
         2) Schedule 80 PVC with socket fittings and solvent cemented joints.
         3) Polypropylene (PP-R) SDR 7.4 pipe, with socket-fusion, butt-fusion, fusion-outlet, or electro-fusion fittings and joints.
   4. Underground Piping Corrosion Protection
      a. All buried copper pipe and fittings shall be wrapped with polyethylene corrosion protection pipe wrap, labeled for the type of pipe and fittings that it covers. Pipe wrap shall be Christy's Polywrap, or approved equal.
   5. Reverse Osmosis Water Piping (Type I and Type II RO Water Applications)
      a. Type 316 stainless steel pipe and fittings.
      b. Polyvinylidene Fluoride (PVDF) 'Kynar' pipe and fittings complying with ASTM E84 for a 25/50 flame/smoke rating.

2.3 THRUST BLOCKS

A. All buried piping with friction type joints (bell and spigot, Tyton, etc.) shall have adequate concrete thrust blocks installed at each horizontal and vertical change of direction, at each tee, and at dead ends. Anchor piping at the entrance to the building.

2.4 BASIC VALVES

A. Provide valves complying with Section 220500 (Basic Materials and Methods for Plumbing) and in accordance with the following listing:
   1. Check Valves (All Sizes): Swing check valves
   2. Gas Isolation Valves (All Sizes): Lubricated plug valves
   3. Valves at connections to appliances shall be Milwaukee BA-300, or approved equal.

B. Pressure Reducing Valves:
   1. Manufacturers: Subject to compliance with requirements, manufacturers offering products that may be incorporated into the Work include the following, or approved equal:
      a. Watts Model 223-S-B
      b. Zurn Model 500XLYSBR
   2. Pressure reducing valves shall comply with ASSE Standard 1003.
   3. Pressure reducing valves shall be provided with the manufacturer's upstream strainer, and with an integral bypass capability. Provide upstream and downstream pressure gauges, and a full size valved bypass at each pressure reducing valve location.
   4. Pressure reducing valve size shall be as indicated on the drawings, and/or as appropriate for the associated maximum water flow. Pressure reducing valves for closed hot water and chilled water system make-up shall be 1 inch unless indicated otherwise on the drawings. Provide parallel valves for water flows that are beyond the capacity of a 3 inch pressure reducing valve.
   5. Valve Body shall be lead free brass or bronze. Valve end connections shall be threaded for valve sizes 2-1/2 inch and smaller, flanged for 3 inch valves.
   6. Valves shall be rated for an initial pressure of 150 psi. Valves shall be selected for inlet and outlet pressures as indicated on the drawings.

C. Pressure Compensating Flow Limiting Valves
   1. Provide pressure compensating flow limiting valves where shown on the drawings. Valves shall provide shutoff, measurement, and flow limiting functions, and shall be NSF-61-G and NSF-372 certified for use in a potable water system.
   2. Valves shall be all brass construction with one male thread end with a brass ball valve, and one union end.
   3. Valves shall include a removable stainless steel flow cartridge and a stainless steel spring.
   4. Valves shall be rated for a minimum of 300 psi at 250°F, shall have a flow control accuracy of plus or minus 5%, and shall have a control range of between 2 and 60 psi.
   5. Manufacturers: Subject to compliance with requirements, manufacturers offering products that may be incorporated into the Work include, but are not limited to the following:
      a. Pro Hydronic Model AFLB (No Lead)
      b. IMI Flow Design Model ICSS (No Lead)

2.5 HOSE BIBBS

A. Where located on interior walls hose bibbs shall be Woodford Model 24 with polished bronze body, chrome plated, renewable composition disc, tee key handle, 3/4 inch inlet and hose outlet, with non-removable non-freeze vacuum breaker, and with 2-1/2 gpm flow restrictor.

B. Available Manufacturers: Subject to compliance with requirements, manufacturers offering hose bibbs which may be incorporated in the work include the following, or approved equal:
   1. Woodford

2. Watts

2.6 HYDRANTS

A. Recessed Non-Freeze Wall Hydrants: Woodford Model B65 automatic draining, with flush mounted wall box, polished brass finish, tee handle key, length to suit wall thickness, hinged locking cover, 3/4 inch inlet and hose outlet, with non-removable non-freeze vacuum breaker.

B. Available Manufacturers: Subject to compliance with requirements, manufacturers offering hydrants which may be incorporated in the work include the following, or approved equal:
   1. Woodford
   2. Zurn

2.7 BACKFLOW PREVENTERS

A. Provide reduced pressure principle backflow preventers consisting of complete assembly, including shutoff valves on inlet and outlet, and strainer on inlet. Backflow preventers shall include test cocks and a pressure differential relief valve located between two positive seating check valves.

B. Available Manufacturers: Subject to compliance with requirements, manufacturers offering backflow preventers which may be incorporated in the work include the following, or approved equal:
   1. Zurn Wilkins Model 975XL2
   2. Apollo Model RP4A

2.8 POINT-OF-USE MIXING VALVES

A. Provide point-of-use mixing valves of type and size as noted on drawings. Valves shall be thermostatic type, rated for a maximum pressure of 125 psi. Valves shall be Leonard Model 270-LF, Symmons Model 7-225-CK-MS, Kohler Model K-99799-NA, or approved equal.

2.9 ELECTRONIC MIXING VALVES

A. Provide electronic mixing valves of type and size as noted on the drawings. Electronic mixing valves shall be digital electronic type complying with ASSE 1070. Electronic mixing valves shall be Leonard Model PNV-125-LF, or approved equal.

B. Electronic mixing valves shall include an LED display and a plumbing dashboard diagram with status indicating LED’s.

C. Available Manufacturers: Subject to compliance with requirements, manufacturers offering tempered water control valves which may be incorporated in the work include the following, or approved equal:
   1. Leonard Valve Company
   2. Lawler Manufacturing Company
   3. Armstrong International

2.10 EMERGENCY EYEWASH AND/OR SHOWER ASSEMBLIES

A. Provide emergency eyewash and/or shower assemblies, of type, size, and location as indicated on the drawings. Assemblies and installation shall comply in all regards with ANSI Standard Z358.1.

B. Provide electronic mixing valves of type and size as noted on the drawings. Electronic mixing valves shall be digital electronic type complying with ASSE 1071. Electronic mixing valves shall be Leonard Model ENV-6100-LF, or approved equal, and shall be set to deliver tepid water between 80°F and 90°F (see drawings for required temperature setting).

C. Isolation valves in cold water and hot water piping serving emergency eyewash and/or shower assemblies shall be provided with lockout/tagout devices. Lockout/tagout devices shall be manufactured by Seton, Condor, Brady, or approved equal.

D. Available Manufacturers: Subject to compliance with requirements, manufacturers offering emergency eyewash/shower mixing valves and assemblies which may be incorporated in the work include the following, or approved equal:
   1. Leonard
   2. Haws
   3. Bradley

2.11 WATER HAMMER ARRESTORS

A. Install a manufactured water hammer arrestor in all water branch lines at single fixtures. Water hammer arrestors shall be sized per Plumbing Drainage Institute Standard PDI WH-201 'Water Hammer Arrestors'.

B. Where multiple fixtures are located in a row or battery install single or multiple water hammer arrestors, as appropriate. Water hammer arrestors for multiple fixture installations shall be sized and located per PDI Standard WH-201 and the manufacturer's installation instructions.

C. Water hammer arrestors shall have either threaded or soldered connections.

D. Available Manufacturers: Subject to compliance with requirements, manufacturers offering water hammer arrestors which may be incorporated in the work include the following, or approved equal:
   1. Sioux Chief 650 Series
   2. Mifab CL Series
   3. Precision Plumbing Products SWA or SC Series

2.12 TRAP PRIMERS

A. Provide trap primers of type and quantity indicated on the drawings. Trap primer piping located in a concrete floor slab shall be Type 'L' soft copper with no joints, wrapped with corrosion protection tape, Shurtape PW100 Corrosion Protection Tape, or approved equal.

2.13 ELECTRONIC TRAP PRIMERS

A. Provide electronic trap primers of type and quantity indicated on the drawings. Electronic trap primers shall be Precision Plumbing Products Mini-Prime, or approved equal.

2.14 EXPANSION TANKS FOR POTABLE WATER

A. Provide expansion tanks of size and capacity as listed on the drawings. Expansion tanks shall be replaceable bladder type. Shell and heads shall be of carbon steel welded construction and shall be ASME rated for 125 psi at 240°F. Provide full volume flexible butyl rubber bladder, bottom system connection, air charging fitting, drain connection, lifting eye and base ring for vertical

mounting. Tanks shall be factory pre-charged as indicated on drawings. Wetted connections shall be stainless steel and bladder material shall be FDA approved.

B. Install a ball valve with lockshield at all expansion tanks. Ball valves with lockshield shall be Crane Model D171, or approved equal.

C. Available Manufacturers: Subject to compliance with requirements, manufacturers offering expansion tanks which may be incorporated in the work include the following, or approved equal:
   1. Watts
   2. Elbi
   3. Taco

2.15 COMMERCIAL CLOTHES WASHERS

A. Provide a backflow preventer in the main cold water line serving a single commercial clothes washer or multiple commercial clothes washers.

B. In the cold water piping line serving each commercial clothes washer provide an isolation ball valve, a manual balancing valve, and a high capacity water hammer arrestor.

PART 3 - EXECUTION

3.1 INSTALLATION OF WATER PIPING

A. Run all water piping generally level, free of traps or unnecessary bends, arranged to conform to the building requirements, and to suit clearance for other mechanical work such as ducts, flues, conduits, and other work. No piping shall be installed so as to cause unusual noise from the flow of water therein under normal conditions.

B. Provide water branch lines at single fixtures with a manufactured water hammer arrestor.
   1. Water hammer arrestors shall be located as close to the fixture as possible and in conjunction with the manufacturer's installation instructions.
   2. Where multiple fixtures are located in a row or battery a single or multiple water hammer arrestors, as required, may be used.
   3. Multiple fixture installations shall have the arrestor sized and located per PDI Standard WH-201 and the manufacturer's installation instructions.

C. Install piping on room side of building insulation.

D. Check final location of rubber rings within couplings on PVC water piping with gauge or as recommended by manufacturer. Make connections to valves with cast iron adapters connected to water pipe with cast iron couplings. Furnish and install anchors or thrust blocks.

E. Examine areas and conditions under which plumbing piping systems are to be installed. Do not proceed with any Work until all unsatisfactory conditions have been corrected

3.2 INSTALLATION OF HANGERS AND SUPPORTS

A. Specification Section 220500 (Basic Materials and Methods for Plumbing).

3.3 INSTALLATION OF VALVES

A. Install valves as indicated on Drawings and in the following locations:

1. Shutoff Valves: Install on inlet of each plumbing equipment item, and on inlet of each plumbing fixture, and elsewhere as indicated.
2. Drain Valves: Install on each plumbing equipment item located to completely drain equipment for service or repair. Install at base of each riser, at base of each rise or drop in piping system, and elsewhere indicated or required to completely drain potable water system.

3.4 INSTALLATION OF BACKFLOW PREVENTERS

A. Install backflow preventers where indicated on the drawings. Where drain pans are shown on the drawings, pipe drain pan outlet to the nearest floor drain or floor sink.

3.5 EQUIPMENT CONNECTIONS

A. Piping Runouts to Fixtures: Provide hot and cold water runouts to fixtures of sizes indicated.

B. Mechanical Equipment Connections: Connect hot and cold water piping systems and gas piping systems to mechanical equipment as indicated, and provide a shutoff valve and union at each connection.

3.6 SPARE PARTS

A. Furnish to the Owner, with receipt, one valve key for each key operated hydrant, hose bibb, and faucet installed.

3.7 DOMESTIC WATER SYSTEM STERILIZATION

A. Close open ends of water piping each day to prevent contamination or foreign matter entering pipe during construction. Thoroughly flush out piping to remove any dirt or foreign matter.

B. After flushing of pipe systems, sterilize entire water systems from new point or points of connection before being turned over to Owner for use. Slowly fill system with water and add chlorine chemical agent to produce a minimum of 50 ppm of chlorine in the entering water.

C. Retain treated water in pipe for a minimum of 24 hours. Should chlorine residual at pipe extremities be less than 50 ppm at this time, piping shall be re-chlorinated. As an option, the water systems may be filled with a water and chlorine solution containing a minimum of 200 ppm of chlorine and allowed to stand for four hours.

D. After chlorination, flush lines of chlorinated water and refill from the domestic water supply. Continue flushing until residual chlorine is not greater than the chlorine residual in the flushing water at all pipe extremities. The procedure shall be repeated if it is shown by bacteriological examination made by an approved testing agency that contamination persists in the system.

E. Domestic water sterilization shall be performed in accordance with all requirements of the Nevada Division of Health, Water Supply Regulations. Approval of the State Health Division shall be obtained prior to placing the system in service.

F. Submit a written report to the State Health Division as required by State regulations. Provide a copy of the report to the Architect/Engineer prior to placing the system in service and prior to completion of project.

3.8 TESTING OF PIPING

A. Test piping in accordance with the following schedule. Show no loss in pressure or visible leaks after a minimum duration of four hours at the test pressures indicated.

TEST SCHEDULE

SYSTEM TESTED	TEST PRESSURE	TEST WITH
Hot and Cold Water Piping	150 psi at rough-in and 100 psi after equipment connection	Water

1. Testing equipment, materials, and labor shall be furnished by the Contractor.
2. Repair piping systems sections which fail required piping test, by disassembly and reinstallation, using new materials to the extent required to overcome leakage. Chemicals, stop-leak compounds, mastics, or other temporary repair methods are not acceptable.
3. Drain test water from piping systems after all testing and repair work has been completed.

END OF SECTION

SECTION 221300 - FACILITY SANITARY SEWERAGE

PART 1 - GENERAL

1.1 CONDITIONS OF THE CONTRACT

A. Sections 220000 (Plumbing) and 220500 (Basic Materials and Methods for Plumbing) are hereby made a part of this section.

1.2 WORK INCLUDED

A. Types of plumbing piping and accessories specified in this section include the following:
   1. Building Drain and Vent Piping
   2. Underground Building Drain Piping
   3. Underground Piping Corrosion Protection
   4. Condensate Drain Piping
   5. Trap Primers
   6. Cleanouts
   7. Floor Drains
   8. Miscellaneous Drains
   9. Sump Pumps

1.3 QUALITY ASSURANCE

A. Manufacturer's Qualifications: Firms regularly engaged in manufacture of plumbing piping systems products, of types, materials, and sizes required, whose products have been in satisfactory use in similar service for not less than 5 years.

B. Contractor's Qualifications: Firm with at least 5 years of successful installation experience on projects with piping systems work similar to that required for project.

C. Plumbing Code Compliance: Comply with applicable portions of the Uniform Plumbing Code pertaining to selection and installation of plumbing materials and products.

1.4 SUBMITTALS

A. Refer to Section 013300 - Submittal Requirements for submittal procedures.

B. Product Data: Submit manufacturer's technical product data and installation instructions for plumbing piping system materials and products.

C. As-Built Drawings: At project closeout, submit as-built drawings of installed piping systems in accordance with all associated requirements.

D. Operation and Maintenance Data: Submit operation and maintenance data and parts lists for all plumbing piping system materials and products. Include this data in the operation and maintenance manual in accordance with all associated requirements.

E. Pump Product Data: Submit manufacturer’s pump specifications, installation and start-up instructions, and current accurate pump characteristic performance curves with selection points clearly indicated. Pump efficiency as well as construction will be taken into consideration when assessing the submitted pump.

F. Pump Operation and Maintenance Data: Submit operation and maintenance data and parts lists for each type of pump, control, and accessory, including trouble-shooting maintenance guide. Include this data, product data, and shop drawings in the operation and maintenance manual, in accordance with all associated requirements.

PART 2 - PRODUCTS

2.1 MATERIALS AND PRODUCTS

A. Provide piping materials and factory-fabricated piping products of sizes, types, pressure ratings, temperature ratings, and capacities as indicated. Provide materials and products complying with the Uniform Plumbing Code. Where more than one type of material or product is indicated, selection is the Contractor's option.

2.2 BASIC PIPES AND PIPE FITTINGS

A. Above Ground Building Drain Piping
   1. Hubless Cast Iron Soil Pipe and Fittings: Comply with the latest edition of CISPI Standard 301-18, CISPI Standard 301-21, CISPI Standard 310-12, and ASTM A888. Pipe and fittings shall be marked with the trademark of the Cast Iron Soil Pipe Institute. Shield and clamp assembly shall consist of a 300 series stainless steel corrugated shield, stainless steel bands (number of bands as required for pipe size) and sealing sleeve in conformance with ASTM C564.
   2. Exposed Couplings: Provide couplings with 4 stainless steel clamps, stainless steel bolts and nuts, and neoprene gasket in conformance with ASTM C1540 for heavy duty shielded couplings. Couplings shall be Husky Model SD-4000, Ideal Tridon Heavy Duty, or approved equal.

B. At the Contractor's option vertical piping above floor from lavatories and sinks may be standard weight galvanized steel pipe with class 125 black cast iron fittings, drainage pattern, with screwed joints.

C. Underground Building Drain Piping
   1. Ring-Tite, Polyvinyl Chloride (PVC) Sewer Pipe and Fittings: Conforming to ASTM D3034 (SDR 35).
   2. Hubless Cast Iron Soil Pipe and Fittings: Comply with the latest edition of CISPI Standard 301-18, CISPI Standard 301-21, and ASTM A888. Pipe and fittings shall be marked with the trademark of the Cast Iron Soil Pipe Institute. Shield and clamp assembly shall consist of a 300 series stainless steel corrugated shield, stainless steel bands (number of bands as required for pipe size) and sealing sleeve in conformance with ASTM C564.
   3. Hubless Pipe Couplings Below Grade: Provide couplings with 4 stainless steel clamps, stainless steel bolts and nuts, and neoprene gasket in conformance with ASTM C1540 for heavy duty shielded couplings. Couplings shall be Husky Model SD-4000, Ideal Tridon Heavy Duty, or approved equal.
   4. At the Contractor's option, underground building drain piping that is more than 2 feet beyond the building perimeter and is not located under exterior slabs, aprons, truck ramps, or other concrete surfaces, may be Ring-Tite, polyvinyl chloride (PVC) sewer pipe and fittings conforming to ASTM D3034 (SDR 35).
   5. See Specification Section 22 13 00-3.2 for pipe bedding and backfill requirements.

D. Underground Piping Corrosion Protection
   1. All buried cast iron pipe and fittings shall be wrapped with polyethylene corrosion protection pipe wrap, labeled for the type of pipe and fittings that it covers. Pipe wrap shall be Christy's Polywrap, or approved equal.

E. Cooling Coil Condensate Drain Piping: Type L, hard copper tubing with wrought copper solder joint fittings and 95 percent tin, 5 percent antimony solder. Condensate drain piping 1" and smaller shall use 45 degree wyes and long radius fittings at all changes in direction. Condensate drain piping 1-1/4" and larger shall use DWV fittings.

2.3 TRAP PRIMERS

A. Provide trap primers as indicated on the drawings) with built-in air gap and shutoff valve. Where one trap primer will be used for more than one trap provide an appropriate distribution unit with feeder piping serving a maximum of four traps.

B. Available Manufacturers: Subject to compliance with requirements, manufacturers offering trap primers which may be incorporated in the work include the following, or approved equal:
   1. Mechanical Style
   2. Precision Plumbing Products Model PR-500
   3. Sioux Chief PrimePerfect Model 695-01
   4. Electronic Style
   5. Precision Plumbing Products Model PT (Recessed Cabinet)
   6. Sioux Chief PrimePerfect Model 695-ER (Recessed Cabinet)

2.4 CLEANOUTS

A. General: Cleanouts of the same diameter as the pipe shall be installed in all horizontal soil and waste lines where indicated, and at all points of change in direction. Cleanouts shall be located not less than 18 inches from building construction so as to provide sufficient space for rodding. Provide the listed products by Zurn, Mifab, or approved equal.

B. Cleanouts shall have cast iron ferrules and bronze plugs.

C. Cleanouts extending to floor level shall be provided with membrane flange and clamping collar, bronze raised head plug, and nonslip scoriated top.
   1. Cleanouts in cast iron soil or waste lines: Zurn Z-1440A.
   2. Cleanouts in walls: Zurn Z-1446-A with stainless steel access cover.
   3. Cleanouts at exterior of building: Zurn Z-1440.
      a. Provide a stainless steel cover and vandal-proof screws where cleanouts are located in a wall. Zurn Z-1446-A.
      b. Where located at grade, provide an 18x18x6 inch concrete pad and a Zurn Z-1474 heavy duty cover with a Z-1440-A cleanout.
   4. Cleanouts in concrete floors: Zurn ZN-1400
   5. Cleanouts in terrazzo floors: Zurn Z-1400-T
   6. Cleanouts in carpeted floors: Zurn ZN-1400-T-CM
   7. Cleanouts in vinyl tile floors: Zurn ZN-1400-TX

2.5 FLOOR DRAINS

A. Provide floor drains of size and type as indicated on the drawings, including options or features as specified herein. Provide flashing ring and clamp at floors with waterproofing membrane. Set top

of drain slightly below floor to ensure drainage. Install drains in accordance with the manufacturer's written instructions and in locations indicated on the drawings. Install a vented P-trap below each drain.

B. Available Manufacturers: Subject to compliance with requirements, manufacturers offering floor drains and floor sinks which may be incorporated in the work include the following, or approved equal:
   1. General Service Floor Drains: Zurn Z-415-B.
   2. Shower Floor Drains: Zurn Z-415-B-CP
   3. Floor Drains in Mechanical Rooms: Zurn Z-550-Y (with cast iron bucket)
   4. Floor Drains in Kitchens: Zurn ZN-550-Y-T
   5. Floor Sinks in Kitchens: Zurn ZN-1900-K-2 (with half grate)
   6. Floor Sinks in Mechanical Areas: Zurn Z-566-Y (with half grate)

2.6 MISCELLANEOUS DRAINS

A. Provide drains of size and type as indicated on drawings, including options or features as specified herein. Install vented P-traps below each drain.
   1. Fixed Air Gap Drain: Zurn Z-1025 with size as noted on drawings for pipe connection.

2.7 PLASTER INTERCEPTORS

A. Furnish and install Zurn plaster interceptor with minimum capacity indicated on the drawings. Interceptor shall be cast iron with an acid resistant coating on the interior and exterior.

B. Available Manufacturers: Subject to compliance with requirements, manufacturers offering plaster interceptors which may be incorporated in the work include the following, or approved equal:
   1. Zurn Model Z-1180

2.8 SUMP PUMP (ELEVATOR)

A. Provide sump pumps where shown and/or scheduled on the drawings.

B. All equipment shall be mounted as detailed on the drawings.

PART 3 - EXECUTION

3.1 INSPECTION

A. Examine areas and conditions under which plumbing piping systems are to be installed. Do not proceed with Work until unsatisfactory conditions have been corrected in a manner acceptable to the Contractor.

3.2 INSTALLATION OF SANITARY DRAINAGE SYSTEMS

A. Run all horizontal sanitary drain piping inside of building on a uniform grade of not less than 1/4 inch per foot. Unless otherwise noted on the drawings piping shall have invert elevations as shown and shall slope uniformly between the given elevations.

B. Run all drainage piping as straight as possible with long radius bends. Make all offsets at an angle of 45 degrees or less.

C. Locate piping runs, except as otherwise indicated on the drawings, vertically and horizontally (pitched to drain), and avoid diagonal runs wherever possible. Orient horizontal runs parallel with walls and column lines. Locate runs as shown or described by diagrams, details, and notations, or if not otherwise indicated, run piping in the shortest route which does not obstruct usable space or block access for servicing the building and its equipment.

D. Hold piping close to walls, overhead construction, columns, and other structural and/or permanent enclosure elements of the building. Limit clearance to 1/2 inch where furring is shown for enclosure or concealment of piping. Wherever possible in finished and occupied spaces, conceal piping from view by locating piping in column enclosures, in hollow wall construction, or above suspended ceilings. Do not encase horizontal runs in solid partitions, except as indicated on the drawings.

E. Conceal piping in finished portions of building above the floor line, except where otherwise shown or noted. Cutting of walls and floors shall be held to the minimum possible to attain a proper and functional installation.

F. Should structural difficulties or work of other trades prevent the running of pipes or the setting of equipment at the locations shown on the drawings, any necessary deviations determined by the Contractor, shall be submitted for review by the Architect/Engineer, and shall be be installed without additional cost to the Owner.

G. Inspect each piece of pipe and each fitting to see that there is no defective workmanship on the pipe and that there are no obstructions in the pipes and/or fittings.

H. Cap or plug openings in pipes and fittings immediately to prevent dirt entry until fixtures are installed and/or final connections are made.

I. Below grade hubless cast iron drainage piping shall be installed on smooth soil that does not contain rocks that could damage the piping and the area below fittings shall be hand-cleared to allow the pipe and fitting to be properly supported by the soil below. Bedding on sides and top of hubless drainage piping shall be clean crushed gravel (1/2” minus) or sand that is compacted to 85% proctor density.

J. Hubless Cast Iron Joints: Comply with the coupling manufacturer's assembly and installation instructions and with the latest edition of CISPI Standard 310-12.

K. Below grade PVC drainage piping shall be installed using clean, firm, and uniform bedding material. Provide a minimum of 4 inches of bedding below piping, a minimum of 8 inches on the sides, and a minimum of 6 inches above the piping, compacted to 85% proctor density.

L. PVC Joints: Comply with the coupling manufacturer's assembly and installation instructions and with the latest edition of ASTM D2321.

3.3 INSTALLATION OF SANITARY DRAINAGE VENT PIPING

A. Grade all vent piping such that it will free itself quickly of any water or condensation.

B. Where possible join groups of vent risers together to allow one enlarged roof penetration.

3.4 INSTALLATION OF CLEANOUTS

A. Cleanouts: Install in piping as indicated, as required by the Uniform Plumbing Code, at each change in direction of piping greater than 45 degrees, at maximum intervals of 50 feet for piping 4 inches and smaller, at maximum intervals of 100 feet for piping 5 inches and larger, and at the base of each conductor.

B. Flashing Flanges: Install flashing flange and clamping device with each cleanout passing through waterproof membrane.

3.5 INSTALLATION OF TRAP PRIMERS

A. Install trap primers per the manufacturer's installation instructions, with 1/2 inch Type L hard drawn copper piping to trap primer connection on floor drains and floor sinks where indicated on the drawings.

3.6 INSTALLATION OF PUMPS

A. Install pumps where indicated, in accordance with manufacturer's published instructions, complying with recognized industry practices to ensure that pumps comply with requirements and serve intended purposes.

B. Provide access space around pumps for service as indicated, but in no case less than that recommended by manufacturer.

C. Piping shall be supported from the building structure so as to prevent any strain on the pump casings. A final check for perfect alignment of the piping connections shall be made after pump has been secured to its base. Provide valves, accessories, gauges, flexible connections, and supports as indicated.

D. Install electrical devices furnished by manufacturer but not specified to be factory mounted. Furnish a copy of the manufacturer's wiring diagram to the electrical contractor.

E. Verify that electrical wiring installation is in accordance with manufacturer's submittal and the installation requirements of Division 26. Do not proceed with equipment startup until the wiring installation is complete and correct.

F. Check alignment, and where necessary, realign shafts of motors and pumps within the tolerances recommended by the pump manufacturer.

G. Lubricate pumps before startup. Perform startup in accordance with the manufacturer's written instructions.

H. Pumps shall not be connected to piping before piping is thoroughly flushed and cleaned of all dirt and grit. After piping connections have been made, systems shall be filled before starting pumps. Pumps shall not be run dry under any circumstances.

3.7 TEST OF PIPING

A. Test piping at completion of rough-in, in accordance with the following schedule. Show no loss in pressure or visible leaks after a minimum duration of four hours at the test pressures indicated.

TEST SCHEDULE

SYSTEM TESTED	TEST PROCEDURE	TEST WITH
All Soil, Waste, Drain, & Vent Piping; All Storm Drains within the building. Minimum height of standpipe shall be 10 feet above piping being tested.	Fill with water to top of highest vent and allow to stand 4 hours or longer without a loss of water.	Water

B. At the Contractor's option, piping may be tested with air per UPC Section 712.3.

C. Testing equipment, materials, and labor shall be furnished by this Contractor.

D. Repair piping systems sections which fail required piping test, by disassembly and reinstallation, using new materials to extent required to overcome leakage. Do not use chemicals, stop-leak compounds, mastics, or other temporary repair methods.

E. Drain test water from piping systems after testing and repair work has been completed.

3.8 INSTALLATION OF HANGERS AND SUPPORTS

A. See Specification Section 220500 (Basic Materials and Methods for Plumbing).

3.9 CARE AND CLEANING

A. Repair or replace broken, damaged, or otherwise defective parts, materials, and work. Leave entire work in condition satisfactory to Architect/Engineer. At completion carefully clean and adjust all equipment, fixtures, and trim that is installed as part of this work. Leave systems and equipment in a satisfactory operating condition.

3.10 OPERATION TEST

A. Test each piece of equipment to show that it will operate in accordance with the indicated requirements.

3.11 CLEANING UP

A. Upon completion of the Work remove materials, equipment, apparatus, tools, and the like, and leave the premises clean, neat, and orderly.

END OF SECTION

SECTION 221400 - FACILITY STORM DRAINAGE

PART 1 - GENERAL

1.1 CONDITIONS OF THE CONTRACT

A. Sections 220000 (Plumbing) and 220500 (Basic Materials and Methods for Plumbing) are hereby made a part of this section.

1.2 WORK INCLUDED

A. Types of plumbing piping and accessories specified in this section include the following:
   1. Building Storm Drain Piping
   2. Cleanouts
   3. Roof Drains

1.3 QUALITY ASSURANCE

A. Manufacturer's Qualifications: Firms regularly engaged in manufacture of plumbing piping systems products, of types, materials, and sizes required, whose products have been in satisfactory use in similar service for not less than 5 years.

B. Contractor's Qualifications: Firm with at least 5 years of successful installation experience on projects with piping systems work similar to that required for project.

C. Plumbing Code Compliance: Comply with applicable portions of the Uniform Plumbing Code pertaining to selection and installation of plumbing materials and products.

1.4 SUBMITTALS

A. Refer to Section 013300 - Submittal Requirements for submittal procedures.

B. Product Data: Submit manufacturer's technical product data and installation instructions for plumbing piping systems materials and products.

C. As-Built Drawings: At project closeout submit as-built drawings of the installed piping systems in accordance with all associated requirements.

D. Operation and Maintenance Data: Submit operation and maintenance data and parts lists for plumbing piping systems materials and products. Include this data and product data in the operation and maintenance manual, in accordance with all associated requirements.

PART 2 - PRODUCTS

2.1 MATERIALS AND PRODUCTS

A. Provide piping materials and factory-fabricated piping products of sizes, types, and capacities as indicated. Provide materials and products complying with the Uniform Plumbing Code. Where more than one type of material or product is indicated, selection is the Contractor's option.

2.2 BASIC PIPES AND PIPE FITTINGS

A. Above Ground Storm Drain Piping
   1. Hubless Cast Iron Soil Pipe and Fittings: Comply with the latest edition of CISPI Standard 301-18, CISPI Standard 301-21, CISPI Standard 310-12, and ASTM A888. Pipe and fittings

shall be marked with the trademark of the Cast Iron Soil Pipe Institute. Shield and clamp assembly shall consist of a 300 series stainless steel corrugated shield, stainless steel bands (number of bands as required for pipe size) and sealing sleeve in conformance with ASTM C564.

2. Exposed Couplings: Provide couplings with 4 stainless steel clamps, stainless steel bolts and nuts, and neoprene gasket in conformance with ASTM C1540 for heavy duty shielded couplings. Couplings shall be Husky Model SD-4000, Ideal Tridon Heavy Duty, or approved equal.

B. Underground Storm Drain Piping
   1. Ring-Tite, Polyvinyl Chloride (PVC) Sewer Pipe and Fittings: Conforming to ASTM D3034 (SDR 35).
   2. Hubless Cast Iron Soil Pipe and Fittings: Comply with the latest edition of CISPI Standard 301-18, CISPI Standard 301-21, and ASTM A888. Pipe and fittings shall be marked with the trademark of the Cast Iron Soil Pipe Institute. Shield and clamp assembly shall consist of a 300 series stainless steel corrugated shield, stainless steel bands (number of bands as required for pipe size) and sealing sleeve in conformance with ASTM C564.
   3. Hubless Pipe Couplings Below Grade: Provide couplings with 4 stainless steel clamps, stainless steel bolts and nuts, and neoprene gasket in conformance with ASTM C1540 for heavy duty shielded couplings. Couplings shall be Husky Model SD-4000, Ideal Tridon Heavy Duty, or approved equal.
   4. At the Contractor's option, underground building drain piping that is more than 2 feet beyond the building perimeter and is not located under exterior slabs, aprons, truck ramps, or other concrete surfaces, may be Ring-Tite, polyvinyl chloride (PVC) sewer pipe and fittings conforming to ASTM D3034 (SDR 35).
   5. See Specification Section 221400-3.2 for pipe bedding and backfill requirements.

C. Underground Piping Corrosion Protection
   1. All buried cast iron pipe and fittings shall be wrapped with polyethylene corrosion protection pipe wrap, labeled for the type of pipe and fittings that it covers. Pipe wrap shall be Christy's Polywrap, or approved equal.

2.3 CLEANOUTS

A. General: Cleanouts of same diameter as pipe shall be installed in all horizontal Rainwater leaders where indicated and at all points of change in direction. Cleanouts shall be located not less than 18 inches from building construction so as to provide sufficient space for rodding.

B. Cleanouts shall have cast iron ferrules and bronze plugs.
   1. Cleanouts in cast iron drain lines: Zurn Z-1440A
   2. Cleanouts in walls: Zurn Z-1446-A with stainless steel access cover

2.4 ROOF DRAINS

A. Provide roof drains and overflow roof drains of size and type as indicated on the drawings, including options or features as specified herein. Locate roof drains per architectural roof plans. All roof drain domes shall be cast iron.
   1. Roof Drains (membrane roofs): Zurn Z-100 RC (with cast iron dome)
   2. Overflow Roof Drains: Zurn ZC-100-89-E-R-C (with cast iron dome), two inch high water level regulator, and extension piece of height to match the roofing system.

2.5 ROOF DRAIN TERMINATIONS

A. Provide downspout nozzles of size and type as indicated on the drawings. Downspout nozzles shall be Zurn Model Z199 bronze tongue, Mifab Model R1940-SJ rubbed bronze, or approved equal.

PART 3 - EXECUTION

3.1 INSPECTION

A. Install pipes and pipe fittings in accordance with recognized industry practices which will achieve permanently leakproof piping systems, capable of performing each indicated service without piping failure. Install each run with minimum joints and couplings but with adequate and accessible unions for disassembly and maintenance/replacement of valves and equipment. Reduce sizes where indicated by use of reducing fittings. Align piping accurately at connections, within 1/16 inch misalignment tolerance.

3.2 INSTALLATION OF DRAINAGE SYSTEMS

A. Run all horizontal storm drain piping inside of building on a uniform grade of not less than 1/4 inch per foot. Unless otherwise noted on the drawings piping shall have invert elevations as shown and shall slope uniformly between the given elevations.

B. Run all drainage piping as straight as possible with long radius bends. Make all offsets at an angle of 45 degrees or less.

C. Locate piping runs, except as otherwise indicated on the drawings, vertically and horizontally (pitched to drain), and avoid diagonal runs wherever possible. Orient horizontal runs parallel with walls and column lines. Locate runs as shown or described by diagrams, details, and notations, or if not otherwise indicated, run piping in the shortest route which does not obstruct usable space or block access for servicing the building and its equipment.

D. Hold piping close to walls, overhead construction, columns, and other structural and/or permanent enclosure elements of the building. Limit clearance to 1/2 inch where furring is shown for enclosure or concealment of piping. Wherever possible in finished and occupied spaces, conceal piping from view by locating piping in column enclosures, in hollow wall construction, or above suspended ceilings. Do not encase horizontal runs in solid partitions, except as indicated on the drawings.

E. Conceal piping in finished portions of building above the floor line, except where otherwise shown or noted. Cutting of walls and floors shall be held to the minimum possible to attain a proper and functional installation.

F. Should structural difficulties or work of other trades prevent the running of pipes or the setting of equipment at the locations shown on the drawings, any necessary deviations determined by the Contractor, shall be submitted for review by the Architect/Engineer, and shall be be installed without additional cost to the Owner.

G. Inspect each piece of pipe and each fitting to see that there is no defective workmanship on the pipe and that there are no obstructions in the pipes and/or fittings.

H. Cap or plug openings in pipes and fittings immediately to prevent dirt entry until fixtures are installed and/or final connections are made.

I. Below grade hubless cast iron drainage piping shall be installed on smooth soil that does not contain rocks that could damage the piping and the area below fittings shall be hand-cleared to allow the pipe and fitting to be properly supported by the soil below. Bedding on sides and top of hubless drainage piping shall be clean crushed gravel (1/2” minus) or sand that is compacted to 85% proctor density.

J. Hubless Cast Iron Joints: Comply with the coupling manufacturer's assembly and installation instructions and with the latest edition of CISPI Standard 310-12.

K. Below grade PVC drainage piping shall be installed using clean, firm, and uniform bedding material. Provide a minimum of 4 inches of bedding below piping, a minimum of 8 inches on the sides, and a minimum of 6 inches above the piping, compacted to 85% proctor density.

L. PVC Joints: Comply with the coupling manufacturer's assembly and installation instructions and with the latest edition of ASTM D2321.

3.3 INSTALLATION OF CLEANOUTS

A. Cleanouts: Install in piping as indicated, as required by the Uniform Plumbing Code, at each change in direction of piping greater than 45 degrees, at minimum intervals of 50 feet for piping 4 inches and smaller and 100 feet for larger piping, and at the base of each conductor.

B. Flashing Flanges: Install flashing flange and clamping device with each cleanout passing through a waterproof membrane.

3.4 TEST PROCEDURES

A. Test piping at completion of rough-in, in accordance with the following schedule and show no loss in pressure or visible leaks after a minimum duration of four hours at the test pressures indicated.

SYSTEM TESTED	TEST PROCEDURE	TEST WITH
All Soil, Waste, Drain, & Vent Piping; All Storm Drains within the building. Minimum height of standpipe shall be 10 feet above piping being tested.	Fill with water to top of highest vent. Allow to stand 4 hours without loss of water.	Water

B. At the Contractor’s option, piping may be tested with air per UPC Section 712.3.

C. Testing equipment, materials, and labor shall be furnished by this Contractor.

D. Repair any piping system sections that fail the required piping test, by disassembly and reinstallation, using new materials to the extent required to overcome leakage. Do not use chemicals, stop-leak compounds, mastics, or other temporary repair methods.

E. Drain test water from piping systems after the testing and repair work has been completed.

3.5 INSTALLATION OF HANGERS AND SUPPORTS

A. See Specification Section 220500 (Basic Materials and Methods for Plumbing).

3.6 CARE AND CLEANING

A. Repair or replace broken, damaged, or otherwise defective parts, materials, and work. Leave the entire work in a condition satisfactory to Architect/Engineer. At completion, carefully clean and adjust equipment that is installed as part of this work. Leave systems and equipment in a satisfactory operating condition.

3.7 CLEANING UP

A. Upon completion of the Work remove materials, equipment, apparatus, tools, and the like, and leave the premises clean, neat, and orderly.

END OF SECTION

SECTION 221500 - FACILITY NATURAL GAS SYSTEMS

PART 1 - GENERAL

1.1 CONDITIONS OF THE CONTRACT

A. Sections 220000 (Plumbing) and 220500 (Basic Materials and Methods for Plumbing) are hereby made a part of this section.

1.2 WORK INCLUDED

A. Types of piping systems and specialties specified in this section include the following:
   1. Steel Gas Pipe
   2. Polyethylene Gas Pipe
   3. Miscellaneous Piping Materials/Products
   4. Gas Pressure Regulating Valves
   5. Flexible Connections
   6. Emergency Fuel Shutoff Valves
   7. Hangers and Supports

1.3 QUALITY ASSURANCE

A. Welders' Qualifications:
   1. Welding: Qualify welding procedures, welders and operators in accordance with ASME B31.1, or ASME B31.9, as applicable, for shop and project site welding of piping work.

B. Heat fusion qualifications:
   1. Heat Fusion Joining: Qualify procedures and operators in accordance with the requirements of Title 49 of the Code of Federal Regulations as it applies to heat fusion.

C. Manufacturers: Firms regularly engaged in manufacture of supports and anchors of types and sizes required, whose products have been in satisfactory use in similar service for not less than five years.
   1. Plumbing Code Compliance: Comply with applicable portions of the Uniform Plumbing Code pertaining to selection and installation of plumbing materials and products.
   2. ANSI Compliance: Fabricate and install natural gas piping in accordance with ANSI B31.2 (Fuel Gas Piping).
   3. NFPA Compliance: Fabricate and install natural gas systems in accordance with NFPA (National Fuel Gas Code).
   4. Utility Compliance: Fabricate and install natural gas systems in accordance with local gas utility company requirements.
   5. Comply with applicable codes pertaining to product materials and installation of supports and anchors.
   6. UL and FM Compliance: Provide products which are Underwriters Laboratories listed and Factory Mutual approved.

1.4 SUBMITTALS

A. Refer to Section 013300 - Submittal Requirements for submittal procedures.

B. Product Data: Submit catalog cuts, specifications, installation instructions, and dimensioned drawings for each type of pipe, support, anchor, and seal listed in this section.

C. Welding Certifications: Submit certifications and reports for welded piping work.

PART 2 - PRODUCTS

2.1 GENERAL

A. Provide pipe and tube, joint type, grade, size, and weight indicated for each service, and complying with governing regulations and industry standards.

B. All piping, valves, and accessories shall be specifically listed and approved for use with natural gas.

2.2 BELOW GRADE POLYETHYLENE GAS PIPE

A. Polyethylene Pipe, PE2406. Pipe and fittings shall meet the requirements of ASTM D2513.

B. Fittings and accessories shall be as manufactured and furnished by the pipe supplier. Fittings shall meet the requirements of ASTM D2513, as mandated by CFR 49 Part 192.59 and is so marked, according to Part 192.63.

2.3 WELDING MATERIALS

A. Except as otherwise indicated, provide welding materials as determined by the Contractor as required to comply with all installation requirements and to comply with Section II, Part C of the ASME Boiler and Pressure Vessel Code.

2.4 PIPE AND PIPE FITTINGS

A. Gas Piping (Outside the Building)
   1. All Pipe Sizes: Polyethylene Pipe, PE2406.

B. Gas Piping (Below Grade)
   1. All Pipe Sizes: Polyethylene Pipe, PE2406.

C. Gas Piping (Building Distribution)
   1. Pipe sizes 2 inches and smaller shall be Schedule 40 black steel pipe with malleable iron threaded fittings.
   2. Pipe sizes 2-1/2 inches and larger shall be Schedule 40 black steel pipe with wrought steel butt and/or socket weld fittings.
   3. Gas piping of all sizes routed inside a building at a pressure that exceeds 1 psi (28“ w.c.) shall be Schedule 40 black steel pipe with wrought steel butt and/or socket weld fittings.

D. Gas Piping (Below a Concrete Floor Slab)
   1. Install gas piping that is located below a concrete floor slab in accordance with UPC Section 1210.1.6. Gas piping that is located below a concrete floor slab shall be flexible stainless steel with a polyethylene sleeve, Omega TracPipe P-II, or approved equal. Fittings connected to the Omega TracPipe P-II flexible gas piping shall be by the same manufacturer as the pipe. Pipe and fittings shall be installed in conformance with the manufacturer’s written instructions. The gas piping sleeve shall be vented to the outdoors in compliance with UPC Section 1210.1.6.1.

2.5 PIPING SPECIALTIES

A. Comply with Section 220500 (Basic Materials and Methods for Plumbing)

1. Pipe Escutcheons
2. Pipe Sleeves
3. Sleeve Seals
4. Unions and Flanges

2.6 BASIC GAS VALVES

A. Gas Valves: Valves 4 inch and smaller shall be Nibco T-FP-600A-LF, Apollo 94ALF-A, or approved equal. Valves 5 inch and larger shall be worm gear operated, Nordstrom Figure149, Resun Figure R013410-WGA, or approved equal. Gas valves shall be CSA/AGA and ASME listed.

B. Appliance Gas Valves: Provide a gas valve at each connection to an appliance. Appliance gas valves shall be Nibco GB1A, Milwaukee BB2 Series, or approved equal. Gas valves shall be CSA/AGA and ASME listed.

2.7 GAS PRESSURE REGULATING VALVES

A. Provide single stage, steel jacketed, corrosion resistant gas pressure regulators with atmospheric vent, elevation compensator with threaded ends for 2 inches and smaller, flanged ends for 2-1/2 inches and larger, for inlet and outlet gas pressures, specific gravity, and volume flow indicated on the drawings. All gas pressure regulators shall be ANSI/CSA approved.

B. Install as indicated and comply with all utility provider requirements. Pipe atmospheric vent to outdoors, full size of outlet. Install a gas shutoff valve upstream of each pressure regulating valve.

C. Gas pressure regulating valves shall be installed such that the pressure regulator vent is a minimum of 3 feet from any doors, openable windows, foundation vents, crawlspaces, electrical panels, phone and/or cable tv conduits, etc. The pressure regulator vent shall also be a minimum of 5 feet from any powered air intakes, evaporative coolers, make-up air louvers, etc.

2.8 EMERGENCY GAS SHUTOFF VALVES

A. Provide emergency gas shutoff valves where shown on the drawings. Valves shall be listed by either UL or FM and by either AGA or CSA, and shall be capable of being installed in either a horizontal or vertical position. Valve sizes 1/2” through 3” shall be Asco Series S261, AGS Model GSV, or approved equal. Valve sizes 4” and 6” shall be AGS Merlin, or approved equal.

B. A strainer shall be installed upstream of each emergency gas shutoff valve. Strainers 3 inch and smaller shall be Titan YS-12-CI, or approved equal, with 40 mesh strainer and Buna gasket. Strainers 4 inch and larger shall be Titan YS-61-CS, or approved equal, with 40 mesh strainer and Buna gasket.

2.9 SEISMIC GAS SHUTOFF VALVES

A. Provide seismic gas shutoff valves where shown on the drawings. Seismic gas shutoff valves shall be California KOSO Valve manufactured by Pacific Seismic Products, with remote monitoring switch. Install seismic gas valve immediately outside the gas service entrance to each building. The gas piping immediately adjacent to the seismic gas shutoff valve shall be secured to the building with Unistrut channel bracing and a Unistrut Series P1100 pipe clamp.

2.10 FLEXIBLE CONNECTIONS

A. Provide flexible connections in gas piping at all equipment, including but not limited to, boilers, water heaters, furnaces, rooftop units, kitchen equipment, and clothes dryers. Flexible connections shall be as Metraflex Model GASC, Mason Industries Model CSAMN, Unisource Series 400, or approved equal. Flexible connections shall be CSA approved.

PART 3 - EXECUTION

3.1 INSTALLATION OF GAS PIPING

A. Install piping and pipe fittings in accordance with recognized industry practices which will achieve permanently leakproof piping systems, capable of performing each indicated service without piping failure. Install each run with minimum joints and couplings but with adequate and accessible unions for disassembly and maintenance/replacement of valves and equipment. Reduce sizes where indicated by use of reducing fittings. Align piping accurately at connections, within 1/16 inch misalignment tolerance.

B. Comply with ANSI B31 Code for Pressure Piping.

C. Use sealants on metal gas piping threads which are chemically resistant to natural gas. Use sealants sparingly and apply to only male threads of metal joints.

D. Remove cutting and threading burrs before assembling piping.

E. Do not install defective piping or fittings. Do not use pipe with threads which are chipped, stripped, or damaged.

F. Plug each gas outlet, including valves, with threaded plug or cap immediately after installation and retain until continuing piping or equipment connections are completed.

G. Ground gas piping electrically and continuously within project, and bond tightly to grounding connection. Provide listed isolation fitting above grade prior to entry into building. Provide independent ground systems for above ground and below grade.

H. Install drip legs in gas piping where indicated and where required by code or regulation.

I. Install tee fitting with bottom outlet plugged or capped at bottom of pipe risers.

J. Install gas piping with 1/64 inch per foot (1/8 percent) downward slope in direction of flow.

K. Maintain minimum of 12 inch clearance between gas piping and steam piping above 200°F.

L. Install magnesium anodes for underground steel pipe, one 5 lb anode for up to 100 feet in length and one 5 lb anode for each additional 100 feet.

M. Locate piping runs, except as otherwise indicated, vertically and horizontally (pitched to drain), and avoid diagonal runs wherever possible. Orient horizontal runs parallel with walls and column lines. Locate runs as shown or described by diagrams, details and notations, or if not otherwise indicated, run piping in shortest route which does not obstruct usable space or block access for servicing building and its equipment.

N. Hold piping close to walls, overhead construction, columns, and other structural and permanent enclosure elements of the building, limit clearance to ½ inch where furring is shown for enclosure

or concealment of piping, locate insulated piping for a 1 inch clearance outside of the insulation. Wherever possible in finished and occupied spaces conceal piping from view by locating in column enclosures, in hollow wall construction, or above suspended ceilings. Do not encase horizontal runs in solid partitions, except as indicated on the drawings.

O. Electrical Equipment Spaces: Do not run piping through transformer vaults and other electrical or electronic equipment spaces and enclosures unless unavoidable. Install drip pans under piping that must be run through electrical spaces and in all other locations indicated on the drawings.

P. Should structural difficulties or work of other contractors prevent the running of pipes or the setting of equipment at the points shown, the necessary deviations therefrom, as determined by the Contractor, with the Architect/Engineer's review, will be allowed but must be made without additional cost to Owner.

Q. Inspect each piece of pipe and each fitting to see that there is no defective workmanship on pipe or obstructions in pipes and fittings.

R. Install exposed polished or enameled connections from fixtures or equipment with special care, showing no tool marks or threads at fittings.

S. Cap or plug openings in piping and fittings immediately to exclude all dirt until fixtures are installed or final connections are made.

T. Use reducing fittings where any change in pipe size occurs. Bushings shall not be used.

U. Couplings shall not be used except where required pipe runs between fittings are longer than a standard length of the type of pipe being used and except where their use is specifically reviewed by the Architect/Engineer.

V. Conceal piping in finished portions of building, above the floor line, except where otherwise shown or noted. Cutting of walls and floors shall be held to the minimum possible to secure the proper installation.

W. Install piping subject to expansion or contraction in a manner permitting strains to be evenly distributed and alleviated by expansion loops installed as required.

X. Sleeves for branches through walls from adjacent mains shall be of sufficient size to allow for free side motion of covered pipe in sleeve.

Y. Install polyethylene pipe where indicated on the drawings in accordance with ASTM D2774 ‘Standard Recommended Practice for Underground Installation of Thermoplastic Pressure Piping’ and as required by the manufacturer's installation instructions.
   1. Polyethylene pipe fittings shall be joined in accordance with the pipe manufacturer’s instructions.
   2. Connection of plastic pipe with metal pipe shall be only outside underground with ASTM D2513 category I transition fittings.
   3. Gas pipe risers to above grade, shall be metallic and shall be wrapped or coated to a point at least six inches above grade.
   4. When riser connects underground to plastic pipe, the underground horizontal metallic portion of the riser shall extend at least 30 inches before connecting to the plastic pipe.
   5. Heat fusion joints shall be made in accordance with qualified procedures that have been established and proven by test to produce gas tight joints at least as strong as the pipe or

tubing being joined. Joints shall be made with the joining method recommended by the pipe manufacturer.

6. Plastic pipe shall be buried with an electrically continuous corrosion resistant tracer wire (minimum 14 AWG) and tape to facilitate locating. One end of the wire and tape shall be brought above ground at a riser.

3.2 INSTALLATION OF HANGERS AND SUPPORTS

A. See Specification Section 220500 (Basic Materials and Methods for Plumbing).

3.3 INSTALLATION OF PIPING SYSTEM JOINTS

A. General: Provide joints of type indicated in each piping system.

B. Cut all steel pipe by power hacksaw, a circular cutting machine using an abrasive wheel, or in square end vise by means of hand hacksaw. Wheel cutters may be used for steel pipe provided that the pipe shall have ends reamed to full inside diameter and beveled before being made up into fittings. Pipe shall have round edges or burrs removed such that a smooth and unobstructed flow will be obtained.

C. Thread pipe in accordance with ANSI B2.1, cut threads full and clean using sharp dies. Ream threaded ends to remove burrs and restore full inside diameter. Apply pipe joint compound, RectorSeal No. 5, or approved equal, on male threads at each joint and tighten joint to leave not more than 3 threads exposed. Teflon tape may be used on piping 1-1/2 inches and smaller.

D. Use joint compound, same as specified for threaded pipe joints, on all cleanout plugs.

E. Weld pipe joints in accordance with recognized industry practice and as follows:
   1. Welding shall be done by qualified welders in a first class, workmanlike manner, conforming to the American Standard Code for Pressure Piping ANSI B31.1 and B31.1A.
   2. Bevel pipe ends at a 37.5 degree angle where possible, smooth rough cuts, and clean to remove slag, metal particles, and dirt.
   3. Do not weld out piping system imperfections using tack welding procedures. Re-fabricate piping to comply with requirements.

3.4 INSTALLATION OF FLANGED JOINTS

A. Match flanges within piping system and at connections with valves and equipment. Clean flange faces and install gaskets. Tighten bolts to provide uniform compression of gaskets.

3.5 INSTALLATION OF PROTECTIVE PIPE WRAP

A. Protect all steel pipe buried in ground from corrosion by the application of protective pipe wrap. Clean and prime pipe before application of the wrapping material.

3.6 INSTALLATION OF DETECTABLE UNDERGROUND WARNING TAPE

A. Protect all underground gas and/or fuel oil piping systems (when shown on the mechanical and/or plumbing drawings) with a detectable underground warning tape, as manufactured by Seton, or approved equal. This requirement applies to metallic and non-metallic piping (including polyethylene piping).

B. Detectable underground warning tape shall consist of 5 mil foil tape printed with associated pipe service (e.g., 'Caution Gas Line Below').

C. Tape shall be buried approximately one half of the pipe buried depth. Tape buried up to 24" deep shall be a minimum of 3" wide. Tape buried greater than 24" deep shall be a minimum of 6" wide.

3.7 INSTALLATION OF GAS PRESSURE REGULATING VALVES

A. Install as indicated on the drawings and comply with all utility provider requirements. Pipe atmospheric vent to outdoors, full size of outlet. Install a gas shutoff valve upstream of each pressure regulating valve.

B. Gas pressure regulating valves shall be installed such that the pressure regulator vent is a minimum of 3 feet from any doors, openable windows, foundation vents, crawlspaces, electrical panels, phone and/or cable tv conduits, etc. The pressure regulator vent shall also be a minimum of 5 feet from any powered air intakes, evaporative coolers, make-up air louvers, etc.

3.8 INSTALLATION OF GAS PIPING EQUIPMENT CONNECTIONS

A. Connect gas piping to each gas fired equipment item, with drip leg, gas shutoff valve, and flexible connection. Comply with the equipment manufacturer's instructions. Gas shutoff valves shall comply with UPC Section 1212.6 to be within 6 feet of the equipment and shall be installed no higher than 5 feet above finished floor.

3.9 PIPE CLEANING

A. Purge all newly installed natural gas piping with compressed air.

3.10 TEST OF PIPING

A. Test piping at completion of rough-in, in accordance with the following schedule and show no loss in pressure or visible leaks after a minimum duration of four hours at the test pressures indicated.

TEST SCHEDULE

SYSTEM TESTED	TEST PRESSURE	TEST WITH
Gas Piping	100 psi	Air

B. Testing equipment, materials, and labor shall be furnished by this Contractor.

C. Repair piping systems sections which fail required piping test, by disassembly and reinstallation, using new materials to extent required to overcome leakage. Do not use chemicals, stop-leak compounds, mastics, or other temporary repair methods.

3.11 CARE AND CLEANING

A. Repair or replace broken, damaged, or otherwise defective parts, materials, and work. Leave entire work in condition satisfactory to Architect/Engineer. At completion, carefully clean and adjust equipment, fixtures, and trim that are installed as part of this work. Leave systems and equipment in a satisfactory operating condition.

3.12 OPERATION TEST

A. Test each piece of equipment to show that it will operate in accordance with the indicated requirements.

3.13 CLEANING UP

A. Upon completion of the Work remove materials, equipment, apparatus, tools, and the like, and leave the premises clean, neat, and orderly.

END OF SECTION

SECTION 223400 - GAS FIRED DOMESTIC WATER HEATERS

PART 1 - GENERAL

1.1 CONDITIONS OF THE CONTRACT

A. Sections 220000 (Plumbing) and 220500 (Basic Materials and Methods for Plumbing) are hereby made a part of this section.

1.2 WORK INCLUDED

A. Types of plumbing equipment specified in this section include the following:
   1. Gas Fired Water Heaters

1.3 QUALITY ASSURANCE

A. Manufacturers: Firms regularly engaged in manufacture of plumbing equipment of type and sizes required, whose products have been in satisfactory use in similar service for not less than 5 years.

B. Grade or quality of materials desired is indicated by trade names or catalog numbers stated herein.

C. Dimensions, sizes, and capacities shown are minimum and shall not be changed without permission of the Architect/Engineer.

D. UL and NEMA Compliance: Provide electric motors and electrical components required as part of plumbing equipment, which have been listed and labeled by Underwriters Laboratories and comply with NEMA standards.

E. NEC Compliance: Comply with the National Electrical Code (ANSI/NFPA 70) as applicable to installation and electrical connections of ancillary electrical components of plumbing equipment.

1.4 SUBMITTALS

A. Refer to Section 013300 - Submittal Requirements for submittal procedures.

B. Product Data: Submit manufacturer's plumbing equipment specifications, installation and startup instructions, capacity and ratings, with selection points clearly indicated.

C. Maintenance Data: Submit maintenance data and parts lists for each item of plumbing equipment. Include troubleshooting maintenance guides. Include this data in maintenance manual.

PART 2 - MATERIALS

2.1 GAS FIRED WATER HEATERS

A. Available Manufacturers: Subject to compliance with requirements, manufacturers offering gas fired water heaters which may be incorporated in the work include the following, or equal:
   1. Lochinvar Shield
   2. State
   3. AO Smith

B. The water heater shall be capable of full modulation firing down to 20% of rated input with a 5:1 turndown ratio and shall have a minimum 95% thermal efficiency.

C. The water heater shall consist of a direct fired stainless steel heat exchanger mounted on top of a glass lined storage tank in a fashion that will reduce the amount of scale build-up that is known to reduce efficiency. The water heater shall have no visible pipes that connect the heat exchanger to the storage tank. Heat exchangers shall bear the ASME 'HLW' stamp and shall be National Board listed. There shall be no banding material, bolts, gaskets or O-rings in the header configuration.

D. The stainless steel combustion chamber shall be designed to drain condensation to the bottom of the heat exchanger assembly. A built in trap shall allow condensation to drain from the heat exchanger assembly. The water heater shall carry a three year warranty against leaks and a one year parts warranty.

E. The water heater shall bear the ASME 'HLW' stamp and shall be National Board listed. The tank shall have a working pressure of 150 psi. The tank shall be glass lined and fired to 1600°F to ensure a molecular fusing of glass and steel. The tank shall be completely encased in high density insulation of sufficient thickness to meet the energy efficiency requirements of the latest edition of the ASHRAE 90.1 Standard. The tank shall be fitted with a brass drain valve.

F. The water heater shall be certified and listed by C.S.A. International under the latest edition of the harmonized ANSI Z21.10.3 test standard for the US and Canada. Water heater shall comply with the energy efficiency requirements of the latest edition of the ASHRAE 90.1 standard. The water heater shall be certified for indoor installation. The water heater efficiency shall be verified through third party testing by AHRI and listed in the AHRI Certification Directory.

G. The water heater shall be constructed with a heavy gauge steel jacket assembly, primed and pre-painted on both sides. The combustion chamber shall be sealed and completely enclosed, independent of the outer jacket assembly, so that integrity of the outer jacket does not affect a proper seal. A burner/flame observation port shall be provided. The burner shall be a premix design and constructed of high temperature stainless steel with a woven metal fiber outer covering to provide modulating firing rates. The water heater shall be supplied with a gas valve designed with negative pressure regulation and be equipped with a variable speed blower system, to precisely control the fuel/air mixture to provide modulating water heater firing rates for maximum efficiency. The water heater shall operate in a safe condition at a de-rated output with gas supply pressures as low as 4 inches of water column.

H. The water heater shall utilize a 24 VAC control circuit and components. The control system shall have an electronic display for water heater set-up, water heater status, and water heater diagnostics. All electronic circuitry shall be easily accessed and serviceable from the front of the jacket. The water heater shall be equipped with; an all-bronze circulating pump; high limit temperature control; ASME certified temperature and pressure relief valve; inlet & outlet water temperature sensors; flue temperature sensor; runtime contacts; alarm contacts; low water flow protection, contacts for louvers, security protection, adjustable pump delay, enable/disable contacts and built-in freeze protection. The manufacturer shall verify proper operation of the burner, all controls and the heat exchanger by connection to water and venting for a factory fire test prior to shipping.

I. Provide equal flow manifold for piping entering and leaving multiple water heaters. The manifold shall be provided by the manufacturer as a standard option for the specified water heaters.

J. The water heater shall feature a programmable smart control with an LCD display, soft key pad, pump delay with freeze protection, and pump exercise. The water heater shall be equipped with an eight foot power cord. Supply voltage shall be 120 volt/1 phase.

K. The water heater shall be installed and vented with a vertical or sidewall direct vent system. The vent and combustion air material shall be sealed stainless steel or sealed polypropylene routed separately and terminating with the manufacturer's specified termination fitting for both the vent and combustion air. The vent and combustion air materials shall be UL listed for use with the water heater. Note that polypropylene does not conform to ASTM E84 with regard to a 25/50 flame spread and smoke developed rating and cannot be installed in a return air plenum.

L. The water heater shall be approved for 180°F operation.

M. The water heater shall have an independent laboratory rating for Oxides of Nitrogen (NOx) of 20 ppm or less, corrected to 3% O2.

N. The water heater shall operate at altitudes up to 4,500 feet above sea level without additional parts or adjustments.

O. The water heater firing control system shall be direct spark ignition with electronic supervision.

PART 3 - EXECUTION

3.1 INSTALLATION OF GAS FIRED WATER HEATERS

A. Install power gas-fired water heaters as indicated, in accordance with the manufacturer's installation instructions and in compliance with all applicable codes.

B. Furnish wiring diagram to the electrical installer. Refer to Division 26 for wiring requirements.

C. Connect hot and cold water piping to units with shutoff valves and dielectric unions. Connect drain and relief piping as noted on the drawings.

D. Start, test, and adjust water heaters in accordance with the manufacturer's startup instructions. Check and calibrate all controls.

E. All water heaters shall be secured in place with two straps as required by Uniform Plumbing Code Section 507.2.

F. All water heaters shall be installed with an aluminum drainage pan that is a minimum of 1 inch wider than the water heater on all sides. Drainage pans shall be minimum 2-1/2 inches deep and shall include a 1" pvc drain fitting. Drainage pans shall be Oatey aluminum water heater pans, or approved equal.

3.2 TRAINING

A. Provide a minimum of 2 hours of training and orientation of the Owner's staff in proper care and operation of all equipment.

3.3 CARE AND CLEANING

A. Repair or replace broken, damaged, or otherwise defective parts, materials, and work. Leave entire work in condition satisfactory to Architect/Engineer. At completion, carefully clean and

adjust equipment, fixtures, and trim that are installed as part of this work. Leave systems and equipment in a satisfactory operating condition.

3.4 OPERATION TEST

A. Test each piece of equipment to show that it will operate in accordance with the indicated requirements.

3.5 CLEANING UP

A. Upon completion of the Work remove materials, equipment, apparatus, tools, and the like, and leave the premises clean, neat, and orderly.

END OF SECTION

SECTION 230000 - HEATING, VENTILATING, AND AIR CONDITIONING

PART 1 - GENERAL

1.1 CONDITIONS OF THE CONTRACT

A. The Conditions of the Contract (General, Supplementary, and other Conditions) and the General Requirements (Sections of Division 1) are hereby made a part of this section.

B. This section lists general requirements for Heating, Ventilating, and Air Conditioning (HVAC) work and is hereby made a part of each Division 23 specification section.

C. For convenience or reference the Specifications are separated into Divisions and Sections. Such separations shall not operate to make the Engineer an arbitrator to establish subcontract limits between the Prime Contractor and his Subcontractors. In any case, the Prime Contractor is responsible to the owner for a complete job.

D. Wherever the word 'provide' is utilized with regard to materials or equipment on the drawings or in the specifications it shall be interpreted to mean 'furnish and install'.

E. The term 'exposed' shall be interpreted to mean any equipment, ductwork, or piping that is not concealed above a continuous ceiling or inside a finished wall.

1.2 WORK INCLUDED

A. This section consists of general requirements and standard specifications covering certain parts of the HVAC work and is supplemented by other Division 23 specification sections covering additional work, requirements, and materials specifically applicable to the HVAC work of each section. Requirements of subsequent sections of the specifications, if in conflict with these general requirements, shall govern.

1.3 REQUIREMENTS OF REGULATORY AGENCIES

A. Provide work and materials in full accordance with the latest rules and regulations of the following:

Nevada
2018 International Building Code
2018 Uniform Mechanical Code
2018 Uniform Plumbing Code
2017 National Electrical Code
2018 International Fire Code
2018 NFPA Codes and Standards
Nevada State Fire Marshal
Nevada Occupational Safety and Health
National Fire Protection Association
Underwriters Laboratories
All other applicable state codes, rules, and regulations

B. Nothing in the drawings or specifications shall be construed to permit work not conforming to these codes and regulations.

C. When the Contract Documents differ from governing codes, furnish and install the larger size or higher standards called for at no additional cost to the Owner.

1.4 FEES, PERMITS, AND UTILITY SERVICES

A. Obtain and pay for all permits and service required for installation of this work; arrange for required inspections and secure approvals from the authorities having jurisdiction.

B. Arrange for utility connections and coordinate work with utility company.

C. Arrange required inspections and secure approvals from the authorities having jurisdiction.

1.5 SITE EXAMINATION

A. Examine site, verify dimensions and locations against drawings, and inform self of conditions under which work is to be done before submitting proposal. No allowance will be made for extra expense on account of error.

B. Information shown relative to existing services is based upon available records and data but is approximate only. Make minor deviations found necessary to conform to actual locations and conditions without extra cost. Verify location and elevation of utilities prior to commencement of excavation for new piping or its installation.

C. Exercise extreme care in excavating near existing utilities to avoid any damage thereto. This Contractor is responsible for any damage caused by his operations.

1.6 PLACEMENT OF EQUIPMENT AND WORK

A. The placement of equipment and mechanical work in the locations and spaces shown on the drawings is the Contractor's responsibility.

B. Move equipment and/or work into spaces through openings provided or located in the spaces during construction, as required.

C. Perform disassembling and reassembling of equipment and/or other work necessary to accomplish this requirement without extra cost to the Owner.

1.7 SUBMITTALS AND SUBSTITUTIONS

A. In all cases, there is one basis of design manufacturer or product for each item of equipment or product shown on the drawings and/or specified herein. These products are identified by name and model number on the drawings and/or in the specifications. Alternative manufacturers and products are also listed; however, their inclusion as an alternative manufacturer or product does not cause them to be the basis of design. If an alternative manufacturer and/or product is desired to be used by the Contractor, it will be considered a substitution. Substitutions will be interpreted to be all manufacturers or products other than the basis of design. Only one request for substitution will be considered for each item of material or equipment. No substitutions will be considered thereafter. After a substitution request is reviewed and is found to be unacceptable the Architect/Engineer reserves the right to require the originally specified equipment or product at no additional cost to the Owner.

B. If the Contractor desires to make a substitution, he shall submit complete information or catalog data to show equality of equipment or material offered to that specified. No substitutions will be allowed unless requested and reviewed in writing. The Architect/Engineer will review and take appropriate action on shop drawings, product data, samples, and other submittals as required by the contract documents. Such review shall be only for general conformance with the design

concept and general compliance with the information given in the contract documents. The review shall not include review of quantities, dimensions, weights or gauges, fabrication processes, construction methods, coordination with the work of other trades, or construction safety precautions, all of which are the sole responsibility of the Contractor. Review of a specific item shall not indicate acceptance of an assembly of which the item is a component. The Architect/Engineer shall not be required to review and shall not be responsible for any deviations from the Contract Documents not clearly noted by the Contractor, nor shall the Architect/Engineer be required to review partial submissions or those for which submissions for correlated items have not been received. The Architect/Engineer reserves the right to require the originally specified item.

C. Installation of reviewed substitutions is the Contractor's responsibility. Any changes required for installation of reviewed substituted equipment must be made without additional cost to the Owner. Review by the Architect/Engineer of the substituted equipment and/or the dimensioned drawings does not waive the requirements stated herein.

D. In any case where the Contractor intends to utilize a listed or unlisted acceptable equipment manufacturer that is not the basis of design as listed on the drawings and in the specifications it is the Contractor's responsibility to confirm prior to bidding that all ductwork, piping, controls, electrical power, conduit, service clearances, space requirements, and structural requirements match those of the basis of design equipment. Costs for any revisions necessary to accommodate the ductwork, piping, controls, electrical power, conduit, service clearances, space requirements, and structural requirements for the alternative equipment are the responsibility of the Contractor and shall be included in the Contractor's bid. No extra cost will be allowed for failure to allow for accommodations related to the alternative equipment in the Contractor's bid.

E. Submit to the Architect/Engineer for review, within a reasonable time after award of Contract and in ample time to avoid delay of construction, shop drawings or submittals on all items of equipment and materials, including all substitutions. Also see Division 1 for additional related requirements.

F. Partial or incomplete sets of equipment and materials submittals will not be acceptable.

G. Assessment of quantities is solely the Contractor's responsibility and will not be reviewed.

H. All submittal data shall be tailored to suit the specific project, with appropriate model or part numbers, materials, sizes, options, and accessories clearly indicated for each different submittal item and on each submittal page. Submittal pages without this information will be returned and will need to be resubmitted with all of the required information indicated on each sheet.

I. The Contractor shall certify that he has examined all submittal data and that the equipment and materials submitted for review meet or exceed the requirements of the drawings and specifications. Submittals without the required certification will not be acceptable.

J. Should the Contractor neglect to include submittal data for any item of equipment or material it shall be assumed and agreed that the associated equipment or material is the exact item specified as the basis of design on the drawings and in the specifications.

K. Electronic Formatted Submittals
   1. Provide submittals in electronic form (.pdf file format).
   2. Identify and incorporate submitted information as follows:
      a. Provide complete submittal package including cover sheet with:

1) Project Name
2) Submittal Package Number (with Revision Number identified)
3) Date
4) Name and Address of Architect/Engineer
5) Name of Contractor
6) Name of Subcontractor

b. Group submitted items by specification section and provide:
1) Index of submitted products with page numbers
a) Name of firm or entity that prepared submittal
b) Name of supplier
c) Name of manufacturer
d) Equipment and/or fixture tag, if applicable
e) Number and title of appropriate specification section

3. Items indicated by the Architect/Engineer to be resubmitted shall be resubmitted as follows:
a. Retain items marked as 'No Exceptions Taken' or 'Make Corrections Noted' and resubmit with the revised package. Do not provide new sheets for these items.
b. Provide revised submittal sheets for all other reviewed items. Provide originally submitted sheet with Architect/Engineer comments. Clearly indicate amendments and modifications made in response to previous submittal review comments.

PART 2 - PRODUCTS

2.1 MATERIALS AND EQUIPMENT

A. Mention herein or on the drawings requires that this Contractor provide each item listed of quality noted, or equal. All material shall be new, full weight, standard in all respects, and in first class condition. Provide materials of the same brand or manufacturer throughout for each class of material or equipment wherever possible. Materials shall be tested within the continental United States by an independent, nationally recognized testing agency and shall be listed in accordance with testing agency requirements.

B. The grade or quality of materials desired is indicated by the trade names and/or catalog numbers stated on the drawings and in the specifications.

C. Dimensions, sizes, and capacities shown are a minimum and shall not be changed without the written permission of the Architect/Engineer.

D. No material installed as part of this work shall contain asbestos in any form.

2.2 MATERIALS FURNISHED

A. Identify all materials and equipment by manufacturer's name and model number. Remove unidentified materials and equipment from site.

B. Equipment specified by manufacturer's number shall include all accessories, controls, etc. listed in catalog as standard with equipment. Furnish optional accessories as specified.

C. Equipment or material damaged during transportation, installation, or operation is considered as totally damaged. Replace with new equipment. Variance from this requirement will be permitted only with the written consent of the Architect/Engineer.

D. Provide an authorized representative to constantly supervise the work of this division. Check all materials prior to installation for conformance with drawings and specifications.

PART 3 - EXECUTION

3.1 ACCESS TO HVAC WORK

A. Comply with manufacturer's written instructions for installation of access doors.

B. Access panels shall be furnished and installed wherever valves, balance valves, damper operating mechanisms, air terminal boxes, fans, and similar items normally requiring adjustment or servicing are installed in concealed or inaccessible spaces. Coordinate with access doors shown on architectural drawings.

3.2 DRAWINGS AND COORDINATION

A. General arrangement and location of piping, ductwork, equipment, etc. are shown on the drawings or herein specified. Carefully examine other work that may conflict with this work. Install this work in harmony with other crafts and at proper time to avoid delay of work.

B. In advance of construction, work out minor changes and relocations to suit actual conditions and work of other trades to avoid any conflicts. This shall not be cause for additional cost.

C. Verify all measurements at the building and be responsible for the correctness of same. No extra compensation will be allowed on account of differences between actual dimensions and those indicated on the drawings.

D. In addition, obtain all necessary information from the other trades regarding centers of partitions, walls, location of plumbing mains, fire sprinkler mains, and electrical conduits, ducts, pipes, etc. in order that pipes, equipment, and ductwork may be placed in their correct positions.

E. Execute any work or apparatus shown on the drawings and not mentioned in the specifications, or vice versa, the same as if specifically mentioned by both. Omission from drawings or specifications of any minor details of construction, installation, materials, or essential specialties does not relieve this Contractor from furnishing same in place complete.

F. Furnish and install any incidental work not shown or specified which can reasonably be inferred as part of the work and necessary to provide a complete and workable system.

G. Furnish materials and work at proper time to avoid delay of the work.

3.3 TEMPORARY UTILITIES, HEATING, AND COOLING

A. Temporary utilities may be connected to the Owner's existing metered utilities only with the Owner's and the utility company's written authorization. Any connection to the Owner's existing utilities shall be separately metered to allow for proper allocation of utility costs unless another arrangement is specifically agreed to and authorized by the Owner in writing. Temporary meters shall be removed upon completion of the Work.

B. The Contractor shall be solely responsible for providing temporary heating, cooling, and/or ventilation as required to prevent degradation or damage to the Work. The permanent heating, cooling, and air handling systems shall not be utilized for the purpose of temporary heating, cooling, or ventilation until the Owner approves of such use in writing. In no case shall the

permanent heating, cooling, or air handling systems be operated until they are complete, including formal startup, check out, and testing and balancing.

C. Utilization of any of the permanent heating, cooling, or air handling systems prior to the date of Substantial Completion shall not impact the specified warranty for such equipment, which shall begin on the date of Substantial Completion.

3.4 ACCESS

A. Continuously check architectural drawings for clearance and accessibility of equipment specified herein to be placed. No allowance of any kind will be made for negligence on part of the Contractor to foresee means of installing his equipment into proper position.

3.5 CLOSING IN OF UNINSPECTED WORK

A. Do not allow or cause work installed to be covered up or enclosed before it has been inspected and tested. Should work be enclosed or covered up before it has been inspected and tested, uncover work at own expense. After it has been inspected and tested, make repairs necessary to restore work of other contractors to condition in which it was found at time of cutting.

3.6 PROJECT MODIFICATIONS

A. During the progress of construction, if any conditions arise that necessitate revisions, modifications, or relocation of any mechanical equipment or materials, such revisions shall be immediately brought to the attention of the Architect/Engineer. The Contractor shall then prepare necessary drawings showing the proposed changes. All proposed changes shall be submitted, reviewed, and approved by the Architect/Engineer prior to proceeding with any associated revision work in the field.

B. Maintain copies of all approved changes at the project site for reference by all parties during the remaining work.

C. Incorporate all revisions into the as-built drawings.

3.7 FORMING, CUTTING, AND PATCHING

A. Coordinate with other contractors as necessary to provide any special forming, recesses, chases, etc., and provide wood blocking, backing, and grounds as necessary for proper installation of mechanical work.

B. If this Contractor fails to coordinate with other contractors at proper time or fails to locate items properly, resulting in extra work, then this Contractor is responsible.

C. This Contractor is responsible for proper placement of pipe sleeves, hangers, inserts, and supports for work.

D. Cutting, patching, and repairing of existing (old) construction to permit installation of piping, etc. is responsibility of this Contractor. Repair or replace damage to existing work with skilled mechanics for each trade involved in a first class manner.

3.8 EXISTING SERVICES

A. Provide and install all required connections to existing systems as required by the drawings and specifications.

B. Integrate existing systems with all new work to provide a complete working system.

C. Provide minimum 48 hour notice to Owner of any service interruptions. All service interruptions shall be kept to the minimum possible time. When requested by Owner service interruptions shall occur outside of normal working hours.

D. The Contractor shall be responsible for damage to any part of the premises during the guarantee period that is caused by defects, leaks, or breaks in work furnished and/or installed under this section.

E. The Contractor shall replace refrigerant, lubricants, and/or gases lost as a result of defects, breaks, or leaks in the work.

3.9 AS-BUILT DRAWINGS

A. Upon completion of work submit to the Architect/Engineer as-built drawings showing all changes in equipment, piping, ductwork, etc. installed as part of this project which are not in accordance with the contract drawings. As-built drawing deliverables shall be in accordance with the requirements of Division 1, and shall consist of the following as a minimum.
   1. Provide as-built drawings in electronic file format (pdf file). In addition to the electronic file, when field mark-ups have been utilized, provide a complete set of full size neatly and legibly marked as-built drawings on 20 pound white bond paper.
   2. As-built drawings shall be full size (same size as the contract documents) and shall be standard engineering scale. The minimum drawing scale shall match those provided in the contract documents.
   3. As-built drawings shall include all outside utility connections, piping, etc. installed under this Contract. Locate and dimension all work with reference to permanent landmarks.

B. Match all symbols and designations used in the contract drawings when preparing the as-built drawings.

C. Indicate clearly and correctly all work installed differently from that shown, and maintain records up to date as work progresses. Include invert elevations of pipes below grade of floor, the floor lines, plugged wyes, tees, caps, exact locations and sizing of piping, location of valves, and the like. Dimension locations from structural points.

D. Properly identify all stubs for future connections as to locations and use by setting of concrete markers at finished grade in manner suitable to the Architect/Engineer.

3.10 PROJECT COMPLETION TESTS AND STARTUP

A. Upon completion of the mechanical work, or at such time prior to completion as may be determined by the Architect/Engineer, operate and test all mechanical equipment and systems for a period of at least five consecutive 8 hour days to demonstrate the satisfactory overall operation of the building or project as a complete unit. Include operation of heating and air conditioning equipment and systems for a period of not less than two 8 hour days at not less than 90 percent of full specified heating and cooling capacities in tests.

B. Commence tests after preliminary balancing and adjustments to equipment have been checked. Immediately before starting tests, install air filters and lubricate all running equipment. The Contractor shall notify the Architect/Engineer at least seven calendar days in advance of starting the tests listed above.

C. Provide training and orientation of the Owner's facilities staff in proper care and operation of equipment, systems, and controls.

D. Neatly tabulate and deliver to the Architect/Engineer complete operational data, including air flows, room temperatures, fan speeds, motor currents, plenum and duct static pressures, and other data as required. The Architect/Engineer reserves the right to spot check results, and if discrepancies or errors are noted, Contractor will be required to redo balancing tests and tabulations entirely.

E. During test period, make final adjustments and balancing of equipment, systems, controls, and circuits so that all are placed in first class operating condition.

F. Mark final positions of balancing valves after balancing is complete.

G. All areas of building shall receive proper flow of hot and chilled water to assure adequate and uniform temperatures throughout.

H. Final observation will not be made until all of the above have been completed and balance report has been submitted and reviewed.

3.11 POST CONTRACT COMPLETION TESTS

A. If the required full load operation conditions cannot be conducted at the time of the 'Project Completion Tests and Start-Up' due to outdoor seasonal temperatures, the Contractor shall return to the job site when appropriate weather conditions arise (and/or when requested by the Architect/Engineer) to complete proper loading of equipment and systems as required. The Contractor will be allowed seven calendar days after notification to begin the tests. The Owner will be responsible for providing new air filters for the Contractor to install prior to this testing if necessary.

3.12 PRE-SEASON START UP

A. Within one year of filing of the Notice of Substantial Completion, when all full load tests required under 'Project Completion Tests and Start-Up' and 'Post Contract Completion Tests' have not yet been performed, the Contractor shall perform startup of any equipment or systems required for heating or cooling season operation when such equipment and systems have remained shut down or remain to be tested under full load. The Contractor shall ensure that all equipment and systems are operating properly before being turned over for the first operational use by the Owner. All such testing shall occur within one year of filing the Notice of Substantial Completion. The Owner will be responsible for providing new air filters for the Contractor to install prior to this testing if necessary.

3.13 GUARANTEE

A. The Contractor shall be responsible for all work done and material installed under the plans and specifications. Repair or replace, as may be necessary, any defective work, material, or part which may show itself within one year of filing of the Notice of Substantial Completion and be responsible for damage to other materials, furnishing, equipment, or premises caused by such defects during this period, if in the opinion of the Architect/Engineer said defect is due to imperfection of material or workmanship. Provide all such work and materials at no cost to the Owner.

3.14 CLEANING UP

A. Upon completion of the Work remove materials, equipment, apparatus, tools, and the like, and leave the premises clean, neat, and orderly.

END OF SECTION

SECTION 230500 - BASIC MATERIALS AND METHODS FOR HVAC

PART 1 - GENERAL

1.1 CONDITIONS OF THE CONTRACT

A. The Conditions of the Contract (General, Supplementary, and other Conditions) and Section 230000 (Heating, Ventilating, and Air Conditioning) are hereby made a part of this section.

B. This section provides requirements for basic materials and methods related to all of the HVAC work. This section applies to all other Division 23 specification sections.

1.2 WORK INCLUDED

A. Types of HVAC items specified in this section include the following:
   1. Materials
   2. Valves
   3. Valve Boxes
   4. Hangers and Supports for HVAC Systems
   5. Seismic Bracing fo HVAC Systems
   6. Flow Meters
   7. Access Doors
   8. Roof and Wall Flashings
   9. Cathodic Protection
   10. Thermometers
   11. Pressure Gauges
   12. Unions and Flanges
   13. Pipe Escutcheons
   14. Pipe Sleeves
   15. Sleeve Seals
   16. Low Pressure Strainers
   17. Penetrations in Fire and Smoke Rated Partitions
   18. Pipe Anchors and Guides
   19. Flexible Hose Expansion Loops
   20. Piping and Equipment Identification
   21. Detectable Underground Warning Tape
   22. Electric Heat Tracing
   23. Painting
   24. Concrete Work
   25. Electric Motors
   26. Electric Motor Starters
   27. Flexible Connections
   28. Pre-Fabricated Roof Curbs
   29. Belt Drives and Guards
   30. Welding

B. Types of valves specified in this section include the following:
   1. Ball Valves
   2. OS&Y Valves
   3. Check Valves

4. Butterfly Valves
5. Manual Balance Valves
6. Automatic Pressure-Compensating Flow Limiting Valves
7. Motor-Operated Valves
8. Air Vent Valves
9. Solenoid Valves
10. Emergency Fuel Shutoff Valves
11. Tempering Valves

C. Types of flow meters specified in this section include the following:
1. Chilled Water, Hot Water, and Heat Pump Loop Flow Meters
2. Make-Up Water Flow Meters
3. Domestic Water Flow Meters

1.3 PROJECT CONDITIONS

A. Existing Utilities: Locate and protect existing utilities and other underground work in manner which will ensure that no damage or service interruption will result from excavating and backfilling.

1.4 QUALITY ASSURANCE

A. Manufacturer's Qualifications: Firms regularly engaged in manufacture of piping specialties and valves, of types and sizes required, whose products have been in satisfactory use in similar service for not less than 5 years.

B. Valve Types: Provide valves of same type by same manufacturer.

C. Identification: Provide piping specialties and valves with manufacturer's name (or trademark) and pressure rating clearly marked on valve body.

1.5 SUBMITTALS

A. Refer to Section 013300 - Submittal Requirements for submittal procedures.

B. Submit manufacturer's technical product data and installation instructions for each type of manufactured piping specialty and valve. Include pressure drop curve or chart for each type and size of valve, control valve and balancing valve.

C. Operation and Maintenance Data: Submit operation and maintenance data and spare parts lists for each type of manufactured piping specialty and valve. Include this data and product data in the operating and maintenance manual in accordance with all associated requirements.

D. All interface requirements (BACnet or other) shall be coordinated with the temperature control system subcontractor prior to issuing submittals and/or ordering any equipment that is required to have an interface.

PART 2 - PRODUCTS

2.1 MATERIALS

A. Provide factory-fabricated piping specialties and valves recommended by manufacturer for use in service indicated. Provide piping specialties of types and pressure ratings indicated for each service, or if not indicated, provide proper selection as determined by Contractor to comply with

installation requirements. Provide sizes and connections which properly mate with pipe, tube, and equipment connections. Where more than one type is indicated, selection is the Contractor's option. Unless otherwise indicated, valves shall be same size as the upstream pipe size.

2.2 VALVES

A. Provide valves as shown on drawings and other valves necessary to segregate branches and equipment.

B. Furnish discs suitable for the service intended. Furnish a brass tag for each valve identifying the service controlled. Properly pack and lubricate valves per manufacturer's recommendations. Place a union adjacent to each threaded valve. Provide two unions at soldered valves. Furnish the flow performance curve for each valve.

C. Provide flanged valves in welded pipe.

D. Provide ball valves in water lines unless otherwise shown.

E. Valves shall be full size of pipe, manufactured by Nibco, Milwaukee, Apollo, or equal, in accordance with the listings herein.

Ball Valves	2" and smaller	Nibco T-585-70-66	Milwaukee BA-400S
Butterfly Valves	2-1/2" and larger	Nibco LD-2022	Milwaukee HL-234E
OS&Y Valves	2-1/2" and larger	Nibco F-667-O	Milwaukee F-2894-M
Check Valves	2" and under 2-1/2" and over	Nibco T-453-B Nibco F968-B	Milwaukee 508 Milwaukee F-2970-M

F. Ball Valves: Nibco T585-70-66, Milwaukee BA-400S, or approved equal. All valves shall have stainless steel ball and stem, PTFE packing, and throttling handle.

G. Butterfly Valves: Nibco Series LD-2022, Milwaukee Series HL-234E, Demco Series NE, Norriseal Series R200, or approved equal. All valves shall have EPDM seats with stainless steel disc, and throttling handle with memory stop. Provide handles for shutoff service, and infinite position throttling capability with indicator plates for balancing.

H. Manual Balance Valves (2" and Below): Fixed port venturi style, Pro-Hydronic CBV Series, IMI Flow Design AccuSetter UA Series, Pro-Hydronic CBVF Series, Taco Accu-Flo, Bell & Gossett Circuit Setter Plus, Nibco T-1810, or approved equal. Variable orifice balancing valves are not acceptable.

I. Manual Balance Valves (2-1/2" and Above): Fixed port venturi style, Pro-Hydronic CBVF Series, IMI Flow Design AccuSetter AF Series, Hays Series CBVF, Nexus Series NVFB, Bell and Gossett Circuit Setter Plus, Nibco F739, or approved equal. Variable orifice balancing valves are not acceptable.

J. Automatic Pressure-Compensating Flow Limiting Valves: Valves shall be Pro-Hydronic Model AFLB, IMI Flow Design Model AC, Nibco Model T-1880, or approved equal. Include removable stainless steel cartridge, union, and test ports. Field adjustable type valves shall be Bell & Gossett Ultra Setter, Oventrop Cocon QTZ, or approved equal.

K. Motor-Operated Ball Valves: Provide motor-operated ball valves where indicated on the drawings. Motor-operated ball valves shall be Belimo B2 Series, or approved equal.

L. Motor-Operated Butterfly Valves: Provide motor-operated butterfly valves where indicated on the drawings. Motor-operated ball valves shall be Belimo F6 Series, or approved equal.

M. Manual Air Vent Valves: Manual air vents shall be furnished as indicated on the drawings, complete with ball type isolation valve, Hoffman Model 78, or approved equal. Valve pressure rating shall be as required for the system in which installed.

N. Automatic Air Vent Valves: Automatic air vents shall be furnished as indicated on the drawings and shall be Hoffman No. 79, Spirotherm Spirotop, or approved equal. Pipe vents to the nearest floor sink. Valve pressure rating shall be as required for the system in which installed.

O. General Purpose Solenoid Valves: Asco Series 8210, or approved equal.

P. Emergency Fuel Shutoff Valves: Asco Series S261 (gas), Asco Series SV401 (fuel oil), or approved equal.

Q. Tempering Valves: Provide tempering valves as scheduled on the drawings. Install per manufacturer's written recommendations. Tempering valves shall be Lawler Series 61, or approved equal, with bronze finish, thermometer, and dual tempered water isolation valves.

R. Pressure Relief Valves:
   1. Provide ASME rated pressure relief valves and temperature and pressure relief valves as indicated on the drawings. Valve size and capacity shall be as required for proper relieving capacity equal to or greater than the capacity of the associated equipment output rating. Valves shall be sized and rated for compliance with Section IV of the ASME Boiler and Pressure Vessel Code and ANSI Z21.22 where applicable.
   2. Pressure Relief Valves: Where indicated on the drawings for boilers, heat exchangers, chillers, etc. provide bronze body relief valves with test lever, complying with listing requirements for temperature and pressure discharge capacity. Valves shall be Watts Series 174A, Series 374, Series 740, or approved equal.
   3. Combined Pressure and Temperature Relief Valves: When indicated on the drawings for water heaters and/or hot water storage tanks provide bronze body relief valves with test lever and thermal sensor (thermostat), complying with listing requirements for temperature and pressure discharge capacity. Valves shall be Watts XL Series, or approved equal.
   4. Available Manufacturers: Subject to compliance with requirements, manufacturers offering relief valves which may be incorporated in the Work include the following:
      a. Watts
      b. Bell and Gossett
      c. Spirax Sarco

S. All 4 inch and larger valves located 10 feet or higher above finished floor shall be provided with chain operators.

2.3 VALVE BOXES

A. Provide at each valve in ground a concrete valve box with the cover marked for the applicable service. Furnish an extension handle for valves as required for opening and closing the valve. In areas that are not subject to vehicle traffic concrete valve boxes shall be Christy Model B-09, or approved equal, with a steel checker plate cover. In areas that are subject to vehicle traffic concrete valve boxes shall be Christy Model B-1017, or approved equal, with a steel checker plate cover.
   1. Do not locate valve boxes in areas subject to vehicle traffic, in walkways, or in covered passageways unless absolutely necessary.
   2. Provide valve box extensions as required to set the bottom of the valve box tight on top of the piping in which the valve is installed.
   3. Provide special valve boxes where required to conform to local codes.

2.4 HANGERS AND SUPPORTS FOR HVAC SYSTEMS

A. See Specification Section 230530 (Hangers and Supports for HVAC Systems).

2.5 SEISMIC BRACING FOR HVAC SYSTEMS

A. See Specification Section 230540 (Seismic Bracing for HVAC Systems).

2.6 FLOW METERS

A. Flow Meters for Chilled Water, Hot Water, and Heat Pump Loop Hydronic Systems: When shown on the drawings, provide electromagnetic style flow meters, Rosemount Model 8700, Onicon Model F-3000, or approved equal. Turbine type flow meters are not acceptable. Flow meters shall be installed in strict conformance with the manufacturer's installation instructions, including required straight pipe length upstream and downstream of the flow meter.

2.7 ACCESS DOORS

A. Where floors, walls, or ceilings must be penetrated for access to mechanical equipment, provide access doors, 14 inch by 14 inch minimum size in usable opening. Where entrance of a serviceman may be required, provide 18 inch by 24 inch minimum usable opening.

B. Access doors shall match those listed in the architectural documents in all respects, except as noted herein.

C. Where panels are located on ducts or plenums, provide neoprene gaskets to prevent air leakage, and use frames to set door out to flush with insulation.

D. Provide insulated access doors where located in internally insulated ducts or casings.

E. Where specific information or details relating to access panels different from the above is shown or given on the drawings or other divisions of work, then that information shall supersede this specification.

F. Available Manufacturers: Subject to compliance with requirements, manufacturers which offer access doors that may be incorporated in the work include the following, or approved equal:
   1. Milcor
   2. Best Access Doors

2.8 ROOF AND WALL FLASHINGS

A. Flashing for penetrations of the roof for mechanical items such as flues and ducts will be furnished and installed under other sections of these specifications. The work of this section shall include layout, sizing, and coordination of penetrations required for the mechanical work. Furnish and install counter-flashings above each flashing required in the mechanical work. Flues and ducts shall have 24 gauge galvanized sheet metal storm collar securely clamped to the flue or duct above the flashing.

2.9 CATHODIC PROTECTION

A. Furnish and install dielectric unions at all locations described herein, whether shown on Drawings or not, and except as noted herein. Construct couplings and flanges so that the two pipes being connected are completely insulated from each other with no metal-to-metal contact. Heavily line the couplings with a hard, insulating, phenolic plastic threaded in standard pipe sizes.

B. Make up the flanges with insulating components consisting of a hard, phenolic gasket, bolt sleeves, and bolt washers. Supplement the insulating gasket with neoprene faces to form a seal.

C. Available Manufacturers: Subject to compliance with requirements, manufacturers which may be incorporated in the work include the following:
   1. Maloney
   2. Walter C. Vallet

2.10 THERMOMETERS

A. Thermometers shall be of the bimetal helix type, Miljoco Model B5099A, or approved equal by Weiss or Weksler. Thermometers shall be accurate to within plus or minus 1% throughout the entire scale range. Scales shall have a minimum of 2 degrees between graduations and a maximum of 20 degrees between figures.

B. Thermometers shall be 5 inch diameter with polycarbonate lens, stainless steel case and ring, stainless steel stem, and stainless steel well. Thermometer stem length for piping shall be 2-1/2 inches, and stem length for tanks shall be 9 inches. Thermometers installed on insulated tanks or piping shall be provided with an extension neck well to compensate for the thickness of the insulation.

C. Thermometer ranges shall be as listed below.

Location	Range
Chilled water supply and return mains.	25° to 125°F
Heating water supply and return mains.	0° to 250°F
Heat pump well field supply and return mains at each header.	25° to 125°F

D. Thermometers used for air temperature in ductwork, plenums, etc., shall have a perforated guard over the stem suitable for sensing air temperature. Stem length shall be 9 inches minimum.

E. Thermometers shall include an adjustable bracket allowing rotation to any position, and shall be located such that they are easily read from a normal vantage point.

F. Thermometer wells with chain and cap shall be provided as spares wherever spare wells are indicated on the drawings.

2.11 PRESSURE GAUGES

A. Pressure gauges shall be flangeless case type, Miljoco Model P4598L, or approved equal by Weiss or Weksler. Gauges shall be accurate to within plus or minus 1% throughout the entire scale range. Scales shall have a minimum of 2 degrees between graduations and a maximum of 20 degrees between figures.

B. Pressure gauges shall be 4-1/2 inch diameter with acrylic lens, stainless steel case, and stainless steel ring. Gauge movement shall be brass with precision-milled teeth. Gauges shall be selected with a pressure range such that the gauge reads near the middle of the total gauge range at the pressure indicated on the drawings. The most common gauge selections will be for ranges of 0 to 160, 0 to 60, and/or 0 to 30 psi.

2.12 UNIONS AND FLANGES

A. Furnish and install unions at each threaded or soldered connection to all equipment, tanks and valves, of type specified in following schedule:

Type of Pipe	Union
Steel pipe 2" and smaller	150 lb screwed malleable ground joint, brass to iron seat, black for black piping, galvanized for galvanized piping.
Screwed steel, black or galvanized 2-1/2" and larger	125 lb cast iron screwed flanged union, flat faced, gasket, black for black piping, galvanized for galvanized piping.
Copper tubing 2" and smaller	150 lb bronze ground joint, bronze to bronze sweat connection.
Copper tubing 2-1/2" and larger	150 lb cast bronze, flat faced flange with silver brazing threadless ends.

B. Insulating couplings or flanges shall be furnished and installed at all connections of piping with dissimilar materials. Construct couplings so that the two pipes being connected are completely insulated from each other with no metal-to-metal contact. Heavily line the couplings with a hard, insulating, phenolic threaded coupling in standard pipe sizes.

C. Furnish and install flanges at each flanged connection to equipment, tanks, and valves per following schedule:

Type of Pipe	Flanges
Screwed black or galvanized steel pipe 2-1/2" and larger	125 lb cast iron screwed flange flat faced, black or galvanized as required, unless noted otherwise.

Welded steel pipe 2-1/2" and larger	150 lb forged steel welding flanges, 1/16" raised faced, unless noted otherwise.

D. Provide full faced or ring type gasket material to suit facing on flanges. Gasket material shall be 1/16" thick Garlock Blue-Gard, or approved equal. Gasket material shall be suitable for the connected piping system content and temperature.

2.13 PIPE ESCUTCHEONS

A. Provide chrome plated brass pipe escutcheons with inside diameter closely fitting pipe outside diameter or outside of pipe insulation where pipe is insulated. Select outside diameter of escutcheon to completely cover pipe penetration hole in floors, walls, ceilings, or pipe sleeve extension, if any. Furnish pipe escutcheons with nickel or chrome finish and screw or spring clamping device with concealed hinge.

B. Available Manufacturers: Subject to compliance with requirements, manufacturers offering pipe escutcheons which may be incorporated in the work include the following, or approved equal:
   1. Chicago Specialty Manufacturing Company
   2. Producers Specialty and Manufacturing Corporation
   3. Sanitary Dash Manufacturing Company

2.14 PIPE SLEEVES

A. Where pipes pass through a concrete floor slab the pipe shall be covered with high density fiberglass insulation. Pipe insulation shall be 1/2” to 1” thick Johns Manville Microlok HP or Johns Manville Trymer 25-50 for the full thickness of the concrete. After the piping has been installed and the concrete has been poured, the fiberglass insulation shall be cut away or compressed leaving a 1/2” deep space that shall then be filled with a high quality silicone sealant resulting in a flat, water-tight installation.

B. Where pipes pass through fire rated concrete floors or walls install a Schedule 10 galvanized metal sleeve providing between a 1/2 inch and 1 inch clearance around the sides of the pipe and/or pipe insulation for the full thickness of the concrete. After the piping has been installed, fill the annular space in accordance with the applicable UL fire rating system.

C. Available Manufacturers: Subject to compliance with requirements, manufacturers offering pipe sleeves which may be incorporated in the work include the following, or approved equal:
   1. 3M

2.15 SLEEVE SEALS

A. Provide sleeve seals for sleeves located in foundation walls below grade or in exterior walls as follows:
   1. Foundations: Lead and oakum, caulked between sleeve opening and pipe.
   2. Walls Below Grade: Modular mechanical type, consisting of interlocking synthetic rubber links shaped to continuously fill the annular space between pipe and sleeve, connected with bolts and pressure plates which cause rubber sealing elements to expand when tightened, providing water-tight seal.

3. Available Manufacturers: Subject to compliance with requirement, manufacturers offering mechanical sleeve seals which may be incorporated in the work include the following, or approved equal:
   a. Thunderline Link-Seal
   b. Calpico

2.16 LOW PRESSURE STRAINERS

A. Provide wye or basket strainers as indicated on the drawings. Strainers shall be full line size of connecting piping, with ends matching the piping system materials, and with cast iron body. Select strainers for 125 psi working pressure, with stainless steel screens, and gasket seal. Provide hose end ball valve on drain fitting. Strainer screens shall have an open area equal to at least twice the cross-sectional area of the pipe in which they are installed (based on IPS) and may be either woven wire or perforated type. Strainer openings shall be .045 inch diameter perforations for strainers up to 3" size and .125 inch diameter perforations for strainers 4" size and larger.

B. Available Manufacturers: Subject to compliance with requirements, manufacturers offering low pressure strainers which may be incorporated in the work include the following, or approved equal:
   1. Metraflex
   2. Taco
   3. Bell & Gossett
   4. Watts

2.17 PENETRATIONS IN FIRE AND SMOKE RATED PARTITIONS

A. Maintain indicated fire or smoke rating of walls, partitions, ceilings, and floors at pipe, conduit, and duct penetrations. Seal all penetrations with fire-stop and smoke-stop materials complying with the requirements for firestopping and fill materials specified in this section.

B. Schedule and conduct a firestopping pre-installation conference at the job site. Coordinate all firestopping means and methods with other contractors and the general contractor (when applicable) prior to beginning any work.

C. Installer Qualifications: A firm that has been approved by FM Global according to FM Global 4991 (Approval of Firestop Contractors), or been evaluated by UL and found to comply with their 'Qualified Firestop Contractor Program Requirements'.

D. Install all penetration firestopping systems to comply with the manufacturer's written installation instructions and published drawings for products and applications.

E. Do not install penetration firestopping system when ambient or substrate temperatures are outside limits permitted by the penetration firestopping system manufacturer or when substrates are wet because of rain, frost, condensation, or other causes.

F. Install and cure penetration firestopping materials per manufacturer's written instructions using natural means of ventilation, or where this is inadequate, forced-air circulation.

G. The specified firestopping systems are based on a solid sealant only, or combinations of solid sealant, foam sealant, and refractory fibers of thickness required to attain hour ratings.

H. Systems shall comply with the following:

1. Provide a flexible seal to prevent passage of fire, smoke, toxic gases, and water through openings, and prevent transmission of sound and vibration from the penetrating element to the structure.
2. Provide hour ratings indicated and in accordance with ASTM E814 and/or UL 1479.

I. Acceptable Manufacturers: 3M, Hilti, SpecSeal, Nelson, Specified Technologies, Tremco, Roxtec, or as otherwise specified. The established standard in most cases is 3M, unless otherwise specified. The listed products are specified to establish standards and the type of materials required. Materials shall be as specified, or approved equal.

J. Sealant: Select among the following materials as appropriate.
1. Solid (Elastomeric): 3M Fire Barrier Premium Latex CP 25WB+ Caulk, one-component elastomeric water-based latex sealant designed for use as a through-penetration firestop.
2. Foam: 3M Fire Barrier 2001 Silicone RTV Foam, two-component silicone elastomer foam-in-place sealant designed to fill irregular or complex voids.
3. Wrap Strip: 3M Fire Barrier FS-195+ Wrap Strip, fire resistive strip designed to be wrapped around the penetrating item and secured in place.
4. Restricting Collar: 3M Fire Barrier RC-1 Restricting Collar, sheet metal, designed for use with wrap strip in combustible through-wall firestop penetration systems.
5. Composite Sheet: 3M Fire Barrier CS-195+ Composite Sheet, elastomeric layer reinforced with mesh restraining wire and covered with aluminum foil on one side and bonded to sheet metal, forming a fire resistive sheet.
6. Putty: 3M Fire Barrier MP Moldable Putty+ Pads and Sticks, one-component elastomeric formable putty, designed for use as a through-penetration firestop system.
7. Spray: 3M FireDam Spray 100, flexible water-based coating.
8. Primers: As recommended by the sealant manufacturer.

K. Pillows: Nelson PLW Firestop Pillow, Hilti FS Fire Block, dust proof chemical resistant cloth with heat-reactive expanding solidifying fill, designed for large openings that require frequent cable alterations.

L. Safing Insulation: USG Thermafiber Safing Insulation, 4 lb density mineral wool insulation, unless indicated otherwise.

M. Damming Materials: As recommended by the firestopping manufacturer.

2.18 PIPE ANCHORS AND GUIDES

A. Provide pipe anchors and guides as indicated on the drawings and/or as required to accommodate any thermal expansion, contraction, or seismic movement of the piping system. Pipe anchors and guides shall be Metraflex Model PGIV, or approved equal by Mason Industries.

2.19 FLEXIBLE HOSE EXPANSION LOOPS

A. Provide flexible hose expansion loop(s) as indicated on the drawings and/or as required to accommodate any thermal expansion, contraction, or seismic movement of the piping system. Flexible hose expansion loops shall be Metraloop as manufactured by Metraflex, or approved equal. In cases where space constraints require a smaller footprint, the Contractor may utilize the Metraflex V-Loop product upon written approval from the Architect/Engineer.

B. Flexible hose expansion loops shall be manufactured complete with two parallel sections of corrugated metal house, compatible braid, 180 degree return bend, with inlet and outlet connections. Field fabricated loops will not be acceptable.

C. Flexible loops shall be capable of 4 inches of movement in the ±X, ±Y, and ±Z planes.

D. Flexible hose expansion loops shall impart no thrust loads to system supports, anchors, or the building structure.

E. Flexible hose expansion loop return fittings shall be supported to allow movement.

F. Flexible loops for natural gas service shall be CSA/AGA certified.

G. All flexible hose expansion loops shall be manufactured in accordance with the documented manufacturer's weld procedure specifications. The weld procedure qualification record shall be used to document the execution of this procedure and shall follow the general guidelines of ASME Section IX. Each welder shall conform to the in-house procedure qualification record and be qualified prior to each production lot. The testing of each individual welder shall be documented in a welding procedure qualification record.

H. Install loops and guides per the manufacturer's written installation instructions and the Mechanical Contractors Association of America 'Guidelines for Quality Piping Installations'.

2.20 PIPING AND EQUIPMENT IDENTIFICATION

A. Each piping system furnished and installed under this work shall be identified and the direction of flow indicated by means of colored labels and flow arrows, all as specified herein. The labels shall be applied after all painting, priming, and cleaning of the piping and insulation is completed.

B. Provide prefabricated coiled plastic piping labels as manufactured by Marking Services Incorporated (MSI), or approved equal. Labels shall comply with ASME A13.1 with regard to color, letter height, and marker size. The labels shall have black or white lettering and flow arrows on colored backgrounds and shall not require adhesive. The background colors shall conform to the color schedule included in the 'Execution' section of this specification.
   1. For pipe labels used indoors use coiled polyester labels, MSI Model MS-975, or equal.
   2. For pipe labels used outdoors use coiled polyester labels, MSI Model MS-995, or equal.
   3. For piping with an outside diameter, including insulation, greater than 6 inches provide the label manufacturer's nylon straps to secure label to piping. Labels shall lie smoothly against pipe or insulation completely around the pipe.
   4. The size of the lettering and label shall be such that the lettering can be easily read from the floor and the colors shall be easily discernible.

C. Provide a white plastic lamacoid plate for each and every piece of equipment installed in this work. Lettering on plate shall be black, with size of lettering to suit equipment. Lettering shall be a minimum of 1/2 inch in height. Plates shall be riveted or bolted to equipment near electrical disconnect or control access panel.

D. Where mechanical or plumbing equipment requiring access is located above a ceiling or behind an access panel, provide an adhesive clear plastic label with 3/8" black lettering on the ceiling grid or access panel identifying the equipment.

E. Available Manufacturers: Subject to compliance with requirements, manufacturers which may be incorporated in the work include the following, or approved equal:
   1. Marking Services Incorporated (MSI)
   2. LEM Products
   3. Seton
   4. Craftmark

2.21 DETECTABLE UNDERGROUND WARNING TAPE

A. Protect the following underground piping and conduit systems (when shown on the mechanical and/or plumbing drawings) with a detectable underground warning tape, as manufactured by Seton, or approved equal.
   1. All gas and/or fuel oil piping.
   2. All heating water, chilled water, and condenser water piping.
   3. All heat pump loop piping.
   4. Temperature control communication conduits.

B. Detectable underground warning tape shall consist of 5 mil foil tape printed with associated pipe service (e.g., 'Caution Gas Line Below').

C. Tape shall be buried approximately one half of the pipe buried depth.
   1. Tape buried up to 24" deep shall be a minimum of 3" wide.
   2. Tape buried greater than 24" deep shall be a minimum of 6" wide.

D. The methodology for locating the installed detectable underground warning tape shall be demonstrated by the Contractor utilizing an appropriate locating device. Locating device shall be Ridgid 'Seetech', Ridgid 'Navitrack', or approved equal.

2.22 ELECTRIC HEAT TRACING

A. For projects that include electric heat tracing see Specification Section 232300 (Heat Tracing for HVAC Piping).

2.23 PAINTING

A. In general, painting will be done by others. Exposed piping and unfinished portions of equipment to be painted shall be cleaned by this Contractor of grease, oil, rust, or dirt in preparation for painting. Spot prime all factory primed surfaces as necessary to repair any damage to finish.

2.24 CONCRETE WORK

A. Where specifically indicated on the drawings or specified as part of the mechanical work, this Contractor shall furnish and install concrete work such as thrust blocks and/or spring isolator bases.

B. Concrete and reinforcing steel shall be equal to that specified for general construction.

C. Except as noted above, concrete work will be furnished and installed by others. This Contractor shall coordinate all requirements accordingly.

2.25 ELECTRIC MOTORS

A. Electric motors larger than 1/2 horsepower (hp) rating shall be, unless otherwise noted, shall be ball bearing, open drip proof, squirrel cage, induction type, normal starting torque, 3 phase, 60

cycle service, 40°C continuous rating, and shall conform in all respects to latest applicable standards of NEMA and AIEE. Motors shall be Century, Louis Allis, Baldor, or equal. Motors located outdoors shall be TEFC type.

B. All motors 1 hp and above shall be high efficiency type, Century E-Plus, or approved equal.

C. Motors utilized with variable frequency drives shall be rated as inverter duty per NEMA standards.

D. Motors shall have nameplate voltage rating of operating voltage specified in subsequent sections of specifications or as shown on drawings and shall have a 1.15 service factor.

E. For normal applications, motors shall be furnished for normal starting torque duty. It shall be this Contractor's responsibility, however, to provide motors and starters (where starters are furnished under this section) having suitable starting torque and current characteristics to allow starting the equipment within the branch circuit protection provided and within the overload protection required by code.

F. Splash-proof or totally enclosed motors having a continuous duty temperature rise rating not exceeding 35°C shall have adequate starting torque, as recommended by the manufacturer, for the service intended.

G. All motors shall be rated at +10% of the scheduled voltage. If not, provide each motor with a boost transformer sized for the intended use and installed in a rated enclosure.
   1. Boost transformers for equipment provided under the mechanical work shall be furnished by the mechanical contractor and turned over to the electrical contractor for installation, unless otherwise noted.

H. Shaft Grounding:
   1. All variable frequency drive motors less than 300 hp shall have a single shaft grounding system to protect the bearings from capacitive discharge through the bearings.
   2. Available Manufacturers: Subject to compliance with requirements, manufacturers which may be incorporated in the work include the following, or approved equal:
      a. CR Series by Shaft Grounding Systems
      b. AEGIS SGR Conductive Microfiber Brush

2.26 ELECTRIC MOTOR STARTERS

A. Magnetic motor starters for equipment provided under the mechanical work shall be furnished by the mechanical contractor and turned over to the electrical contractor for installation, unless otherwise noted. All motor starters shall be by the same manufacturer, Westinghouse, Square D, Cutler-Hammer, General Electric, or approved equal.

B. Magnetic motor starters provided as part of motor control centers shall be provided and installed by the electrical contractor.

C. Unless otherwise noted, magnetic motor starters shall be furnished in a NEMA 1 enclosure for inside installation and in a gasketed NEMA 4 enclosure for outside installation, with three thermal overloads for three phase motors and one overload element for single phase motors. All overloads shall be ambient compensated.

D. Submit schedule to the Architect/Engineer denoting the following:
   1. Designation of each motor

2. Name plate rating of each motor
3. Running current of each motor
4. Catalog number and rating of starter overload elements
5. Circuit breaker trip size (when in combination starter)

E. Combination magnetic starters shall be Westinghouse Type A206 with circuit breaker disconnect and trip size of breaker as required for motor size, or as otherwise noted.

F. Magnetic motor starters shall be Westinghouse Type A200, or approved equal.

G. Manual motor starters shall be Westinghouse Type MST01 less enclosure, or approved equal.

H. Magnetic motor starters shall be provided with cover-mounted Hand-Off-Auto 'Oil-Tight' type switches as scheduled with integral fused 120 volt single phase control transformers.

2.27 FLEXIBLE CONNECTIONS

A. Flexible Connections (Pumps)
1. Provide flexible connections that are 9 to 14 inches long where indicated on the drawings and/or as required to accommodate movement or vibration of the piping system.
2. Flexible connections shall be all stainless steel with carbon steel flanges. Flexible connections shall be rated for no less than 160 psi working pressure at 70°F. Flexible connections shall be Twin City Hose Model TCHS, or approved equal.

B. Flexible Connections (Air Handling Units)
1. Provide flexible connections that are 9 to 14 inches long where indicated on the drawings and/or as required to accommodate movement or vibration of the piping system.
2. Flexible connections shall be all stainless steel with carbon steel flanges. Flexible connections shall be rated for no less than 160 psi working pressure at 70°F. Flexible connections shall be Twin City Hose Model TCHS, or approved equal.

C. Flexible Connections (Rooftop Units, Fan Coil Units, Heat Pumps, Motorized Equipment)
1. Provide 18 inch long flexible connections where indicated on the drawings and/or as required to accommodate movement or vibration of the piping system.
2. Flexible connections shall be all stainless steel with carbon steel ends. Flexible connections shall be rated for no less than 370 psi working pressure at 70°F. Flexible connections shall be Twin City Hose Model HPH, or approved equal.

2.28 PRE-FABRICATED ROOF CURBS

A. Provide manufacturer's standard shop-fabricated units, modified if necessary, to comply with project requirements. All roof curbs shall be secured to the roof support structure.

B. Roof curbs for equipment weighing over 400 lbs shall be seismically designed and rated, with seismic calculations prepared by a Nevada licensed structural engineer, based on an Importance Factor of 1.0, except for critical buildings or applications which require a higher Importance Factor based on the specific application.

C. The roof curb height listed on the drawings indicates the minimum height of the curb at the lower end of the roof slope. The Contractor is responsible for confirming the roof insulation assembly depth on the architectural drawings in order to determine the actual required height of each roof curb. All roof curbs shall be constructed such that the top of the curb is a minimum of 14 inches above the lowest point of the finished roof surface.

D. Fabricate structural framing for units of structural quality sheet steel formed to manufacturer's standard profiles for coordination with roofing, insulation, and deck construction. Include 45 degree cant strips and deck flanges with offsets to accommodate roof insulation. Weld corners and seams to form watertight units.

E. Where gauge is not indicated fabricate units of 14 gauge metal.

F. Sloping Roof Decks: Where the finished roof slope is less than 1" per foot, provide tapered wood nailers (treated wood) at top of support units to form a level top edge.

G. Provide pressure-treated wood nailer, not less than 1-5/8" thick and of not less than width of support wall assembly. Anchor nailer securely to top of metal frame unit.

H. Insulate roof curbs inside structural support walls with R-30 fiberglass batt insulation.

I. For deck slopes of 1" per foot and more, fabricate support units to form a level top edge.

J. Available Manufacturers: Subject to compliance with requirements, manufacturers offering prefabricated seismic roof curbs which may be incorporated in the work include the following, or approved equal:
   1. Same Manufacturer as Equipment
   2. MicroMetl
   3. Thybar

2.29 BELT DRIVES AND GUARDS

A. Belt drives for fans and equipment shall consist of 'V' belts and sheaves.

B. Drives that require no more than two belts shall be provided with variable pitch. Drive sheaves shall provide speed adjustment above and below the normal required operating speed, with the adjustments being as near equal as practicable. Drives that require three or more belts shall be provided with non-adjustable, constant speed sheaves.

C. Rating: Belt drives shall have a minimum horsepower rating at designed speeds of 1.5 times the motor nameplate horsepower rating.

D. Construction: Sheaves shall be cast iron, and shall be machined and balanced. Sheaves shall be keyed to the shaft and locked with allen type set screws.

E. Fan Drives: Fan drives for blower type fans shall be selected for the proper fan speeds required for the air volumes specified or shown on the drawings at the static pressures indicated. The static pressures indicated on the drawings are estimated conditions which may vary under actual operating conditions.

F. Should it be necessary to adjust fan speeds to obtain the proper air volume the Contractor shall make the necessary changes to the drives without additional cost to the Owner.

G. Belts shall be furnished in matched sets.

H. Sheaves shall have pitch diameter of no less than the following for the belt types used.

Fractional HP Section Belt	2.0 inch minimum pitch diameter
A Section Belt	3.0 inch minimum pitch diameter
B Section Belt	5.4 inch minimum pitch diameter
C Section Belt	9.0 inch minimum pitch diameter

D Section Belt	13.0 inch minimum pitch diameter

I. Belt drives, gear drives, shafts, couplings, fan inlets, and running equipment shall be properly protected by guards, whether shown on the drawings or not, all as required by local codes.

J. Construction: Belt guards shall be of all metal construction with angle iron framework. Guards for belt drives shall have a removable section held in place with studs and wing nuts for easy replacement of belts. Openings shall be provided at shaft ends for taking RPM readings. Belts shall be guarded on both sides of the drives.

K. Coupling guards shall be No. 10 gauge steel minimum.

2.30 WELDING

A. Certify that each welder has passed AWS qualification tests for welding processes involved and that certification is current.

B. Steel Support Welding: Qualify procedures and personnel according to AWS D1.1/D1.1M (Structural Welding Code - Steel).

C. Pipe Welding: Qualify procedures and operators according to ASME Boiler and Pressure Vessel Code Section IX. Comply with ASME B31.9 (Building Services Piping) for materials, products, and installation.

PART 3 - EXECUTION

3.1 INSTALLATION OF PIPING SPECIALTIES

A. Pipe Escutcheons: Install pipe escutcheons on each pipe penetration through floors, walls, partitions, and ceilings where penetration is exposed to view and on exterior of building. Secure escutcheon to pipe or insulation so escutcheon covers penetration hole and is flush with adjoining surface.

B. Sleeves: Secure sleeves to metal or wood forms in such a manner that they will not become displaced during pouring of concrete. Fill sleeves on deck with sand. After forms have been removed from concrete, the sleeves shall be removed from the openings.

C. Core drill properly sized holes in the concrete to replace metal sleeves that are crushed or knocked out of position during pouring of concrete.

D. Provide piping passing through concrete fire walls with sleeves of standard black steel pipe nominally one size larger than pipe enclosed, but in the case of insulated pipe, large enough for insulation to pass through. Caulk space between pipe and sleeve with fire rated wicking, and provide metal retainer plates at both sides of the wall.

3.2 INSTALLATION OF LOW PRESSURE STRAINERS

A. Install low pressure strainers full size of connected piping in accordance with manufacturer's installation instructions. Install pipe nipple and shutoff valve in strainer blow down connection, full size of connection, except for strainers 2 inches and smaller installed ahead of control valves feeding individual terminals. Where indicated, provide drain line from shutoff valve to plumbing drain, full size of blow-down connection.

B. Locate strainers in the supply line ahead of the following equipment and elsewhere as appropriate, if an integral strainer is not included in the equipment:
   1. Pumps
   2. Temperature control valves
   3. Pressure reducing valves
   4. Temperature and/or pressure regulating valves

3.3 INSTALLATION OF HANGERS AND SUPPORTS

A. See Specification Section 230530 (Hangers and Supports for HVAC Systems). Where special hanger/support of piping or ductwork is detailed or shown on the drawings, the drawings shall be followed.

3.4 INSTALLATION OF VALVES

A. Install valves where required for proper operation of piping and equipment, including valves in branch lines where necessary to isolate sections of piping. Locate valves so as to be accessible and so that separate support can be provided when necessary.

B. Install valves with stems pointed up, in vertical position where possible, but in no case with stems pointed downward from horizontal plane.

C. Provide union at each connection to equipment and downstream of each valve. Provide unions at both ends of valves when valves cannot be turned due to an obstruction.

D. After piping systems have been tested and put into service, but before final testing, adjusting, and balancing, inspect each valve for possible leaks. Adjust or replace packing to stop leaks; replace valve if leak persists.

E. Tag each valve and provide a complete listing of valve locations and functions. Valve and tag listing shall be laminated and turned over to the Owner for posting as desired. In addition, where valves are located above a ceiling or behind an access panel, provide an adhesive clear plastic label with black 3/8” lettering on ceiling grid or access panel identifying the valve.

3.5 INSTALLATION OF UNIONS AND FLANGES

A. Install unions and flanges so that piping can be easily disconnected for removal of tanks, equipment, and valves. Provide a minimum of two unions at each three-way valve.

3.6 INSTALLATION OF EXPANSION ANCHORS

A. Where permitted in other sections of this specification, expansion anchors may be used in hardened concrete.

B. Job testing: Load test 50 percent of the expansion anchors on each job to twice 80 percent of the ICBO recommended allowable load in tension for that particular anchor, except that if the design load is less than 75 pounds, only one anchor in ten need be tested. If any anchor fails, then test all anchors. Perform the load test in the presence of the Building Inspector.

3.7 INSTALLATION OF CATHODIC PROTECTION

A. Install dielectric unions in the following locations:
   1. At points in piping where dissimilar metal pipes are connected together.
   2. Any special applications shown on the drawings.

3.8 INSTALLATION OF THERMOMETERS

A. Thermometers for piping systems shall be installed so that the liquid flows completely around the sensing well. Pipe sizes at the bulb shall be increased where necessary to allow for full flow without excessive resistance.

B. Where shown on the temperature control diagrams, the temperature control subcontractor shall furnish and install remote panel-mounted thermometers. Duct-mounted thermometers may be omitted at these locations.

C. Thermometers shall be placed at all locations shown on the drawings.

D. In cases where the specified thermometers cannot be located so as to be easily read, a remote reading type thermometer shall be installed, as approved by the Architect/Engineer.

E. Thermometers provided as part of the temperature control work and located on a control panel need not be duplicated by the requirements listed above.

3.9 INSTALLATION OF GAUGES

A. Provide gauge connections at the following locations:
   1. Suction and discharge of chilled water, heating water, and geothermal bore field pumps.
   2. Inlet and outlet of butterfly type balancing valves.
   3. Elsewhere as shown on the drawings.

B. Gauges shall be provided in convenient locations within approximately 3 feet of the flanges or connections and elsewhere as may be shown on the drawings.

C. Gauge Valves and Siphons
   1. A needle point globe valve, Crane No. 88 or equal, shall be installed at each gauge.
   2. A gauge siphon shall be installed at each hot water gauge.

3.10 INSTALLATION OF PIPE IDENTIFICATION

A. Identification shall be applied to all piping, except piping located in furred spaces without access to permit entrance of personnel, and piping buried in the ground or concrete.

B. The legend and flow arrow shall be applied at all valve locations, at all points where piping enters or leaves a wall, partition, cluster of piping, or similar obstruction, and at approximately 20 foot intervals on pipe runs.

C. Practical variations or changes in locations and spacing may be made with the specific approval of the Architect/Engineer to meet specific conditions.

D. Wherever two or more pipes run parallel, the printed legend and other markings shall be applied in the same relative location so that all piping is easily identified.

E. Markings shall be located to be conspicuous from any reasonable vantage point.

F. The legends and flow arrows shall be in the colors as indicated in the pipe marking schedule.

G. Pipe labels shall be as described in Section 2.9 of this specification.

H. Pipe Marking Schedule:

Legend	Color

Heating Water Supply and Return	White on Green
Chilled Water Supply and Return	White on Blue
Heat Pump Supply and Return Water	White on Gray

I. Where different equipment such as fire sprinklers are supplied from a common main, such as a domestic water main, the main should be identified as 'Domestic Water' and each respective branch takeoff as 'Fire Water', etc.

J. Bore field circuit piping in the mechanical room shall be labeled to coincide with the GPS numbering of the bore field

3.11 INSTALLATION OF AIR VENTS

A. Install air vents in hydronic systems at all high points and as required to adequately bleed all air from the piping systems and equipment during initial filling, normal operation, and subsequent filling of each piping system.

B. Install air vents in steam and condensate systems at all high points and as required to adequately bleed all air from the piping systems and equipment during initial filling, normal operation, and subsequent filling of each piping system. Air vents for steam systems shall be balanced pressure type, Spirax Sarco Model VS-204, or approved equal by Armstrong.

3.12 DEMOLITION WORK

A. Unless specifically indicated otherwise, demolition work shall include removal of all associated equipment, electrical/controls components, conduit, and wiring, piping/valves and accessories, and supports. The surfaces where the demolition work was performed shall be restored to match the adjacent surfaces to the best extent practical.

3.13 ELECTRICAL WORK

A. Adequate working space shall be provided around electrical equipment in compliance with the National Electrical Code and other applicable codes. Mechanical work shall be coordinated with the electrical work in order to comply with these requirements. Any work which does not conform to these requirements shall be corrected without additional cost to the Owner.

B. Furnish and install all line voltage and low voltage temperature control wiring in the mechanical work (typically furnished and installed by the temperature control subcontractor) including all interlock wiring between motor starter coils, interlock relays, and temperature control equipment. Unless noted otherwise, this does not include primary control wiring between starters and pushbuttons, other manual starter switches, or branch power circuits required for the temperature control system.
   1. Starters located in motor control centers will be provided under the electrical work. The Contractor is referred to electrical drawings for motors served by motor control centers.
   2. Motors furnished under the mechanical work shall be furnished by the mechanical contractor, but such equipment shall be delivered to the electrical contractor for mounting and connecting to power wiring. Coordinate all motor starter requirements with the electrical contractor.
   3. Temperature control equipment, including relays shown on control diagram, shall be furnished and installed by the temperature control subcontractor.

4. Electrical devices with piping connections, such as solenoid valves, insertion thermostats, strap-on aquastats, and similar items which are to be wired under the electrical work or by the temperature control subcontractor, shall be installed by the mechanical contractor.

C. Equipment furnished in this work that is factory wired but requires modification to internal wiring to meet specifications or drawing requirements shall have such internal modifications made at factory before shipment.

D. All electrical work and equipment, including internal wiring, must comply with applicable codes and applicable portions of electrical specifications. Route line and low voltage control wiring in conduit. Conduit for temperature control wiring shall be responsibility of the mechanical contractor and shall be of type specified in electrical specifications.

3.14 CARE AND CLEANING

A. Repair or replace broken, damaged, or otherwise defective parts, materials, and work. At completion, carefully clean and adjust equipment and trim installed as part of this work. Leave systems and equipment in a satisfactory operating condition.

3.15 OPERATION TEST

A. Test each piece of equipment to show that it will operate in accordance with the indicated requirements.

3.16 CLEANING UP

A. Upon completion of the Work remove materials, equipment, apparatus, tools, and the like, and leave the premises clean, neat, and orderly.

END OF SECTION

SECTION 230520 - OPERATION AND MAINTENANCE OF HVAC SYSTEMS

PART 1 GENERAL

1.1 CONDITIONS OF THE CONTRACT

A. Sections 230000 (Heating, Ventilating, and Air Conditioning) and 230500 (Basic Materials and Methods for HVAC) are hereby made a part of this section.

1.2 WORK INCLUDED

A. This section consists of general requirements covering certain parts of the HVAC work and is supplemented by other specification sections covering additional work, requirements, and materials specifically applicable to the work of each section. Requirements of other sections of the specifications, if in conflict with these requirements, shall govern.

1.3 OPERATING AND MAINTENANCE INSTRUCTIONS

A. Furnish the Architect/Engineer with two complete sets of typewritten operating and maintenance instructions, descriptive literature, catalog cuts, and diagrams covering all items of operation and maintenance for each and every mechanical system and piece of equipment furnished under these specifications.

B. In addition to the bound hard copies the Contractor shall provide an electronic copy (pdf file).

C. The Contractor shall begin compiling the above data (including obtaining operating and maintenance instruction data, catalog cuts, and diagrams from the manufacturer of the reviewed equipment) immediately upon review of his list of materials, so as not to delay the final installation and acceptance of the work.

D. Bind and index each set in a durable, hardboard binder. Final observation should not be requested until the operating and maintenance binders are submitted and have been reviewed by the Architect/Engineer.

E. Incorporate complete operating instructions including starting, stopping, and description of emergency manual operation methods for the following:
   1. Heating Systems
   2. Ventilating Systems
   3. Air Conditioning Systems
   4. Piping Systems
   5. Temperature Control Diagrams
   6. Test Data and Startup Reports

F. Provide charts and diagrams as required.

G. Provide operating manual for all equipment listed in individual sections of the specification.

H. Provide maintenance instructions for each item of individual equipment covering pertinent maintenance data, such as lubricants to be used, frequency of lubrication, inspections required, adjustments required, etc.

I. Provide parts bulletins containing manufacturer's part numbers, instructions, etc. for each item of equipment. Strip bulletins so that useless bulk is avoided.

J. Post service telephone numbers and/or addresses in an appropriate place as designated by the Architect/Engineer or Owner.

PART 2 PRODUCTS - NOT APPLICABLE

PART 3 EXECUTION - NOT APPLICABLE

END OF SECTION

SECTION 230530 - HANGERS AND SUPPORTS FOR HVAC SYSTEMS

PART 1 GENERAL

1.1 CONDITIONS OF THE CONTRACT

A. Section 230000 (Heating, Ventilating, and Air Conditioning), Section 230500 (Basic Materials and Methods for HVAC), and Section 230540 (Seismic Bracing for HVAC Systems) are hereby made a part of this section.

1.2 GENERAL

A. The following information is for pipe hanger and support layout and design reference only. The actual design of all hangers, supports, and seismic bracing is the responsibility of the Contractor per the following specification sections:
   1. Specification Section 230530 (Hangers and Supports for HVAC Systems)
   2. Specification Section 230540 (Seismic Bracing for HVAC Systems)

B. Ductwork: Hangers and supports for rectangular and round ductwork shall be designed in accordance with the latest adopted edition of the SMACNA HVAC Duct Construction Standards. Vertical duct supports shall also be designed in accordance with the latest adopted edition of the SMACNA HVAC Duct Construction Standards. Note that the SMACNA HVAC Duct Construction Standards require that duct hangers also be installed within 2 feet of duct elbows and within 4 feet of duct branch fittings.

C. Rectangular Ducts: (10’ & 8’ maximum spacing with strap or hanger rod sizes based on duct size).

D. Round Ducts: (12’ maximum spacing with strap or hanger rod sizes based on duct size).

E. Piping: Hangers and supports for piping shall be designed in accordance with the latest adopted edition of the standards and codes listed below, and with any other applicable standards. Except in cases where a pipe stress analysis is performed to justify adjusted support and restraint spacing, pipe hangers and supports shall not be placed at intervals that are further apart than the requirements listed in UPC Table 313.3 and in UMC Table 313.3.

Steel Piping	Maximum Spacing	Reference
1-1/4” and smaller	7 feet	ANSI/MSS SP-69 & SP-58 Tables 3 & 4
1-1/2”	9 feet	ANSI/MSS SP-69 & SP-58 Tables 3 & 4
2"	10 feet	ANSI/MSS SP-69 & SP-58 Tables 3 & 4
2-1/2”	11 feet	ANSI/MSS SP-69 & SP-58 Tables 3 & 4
3"	12 feet	ANSI/MSS SP-69 & SP-58 Tables 3 & 4
3-1/2”	13 feet	ANSI/MSS SP-69 & SP-58 Tables 3 & 4
4"	14 feet	ANSI/MSS SP-69 & SP-58 Tables 3 & 4
5"	16 feet	ANSI/MSS SP-69 & SP-58 Tables 3 & 4
6"	17 feet	ANSI/MSS SP-69 & SP-58 Tables 3 & 4
8"	19 feet	ANSI/MSS SP-69 & SP-58 Tables 3 & 4
10"	22 feet	ANSI/MSS SP-69 & SP-58 Tables 3 & 4
12"	23 feet	ANSI/MSS SP-69 & SP-58 Tables 3 & 4
14"	25 feet	ANSI/MSS SP-69 & SP-58 Tables 3 & 4
Copper Piping	Maximum Spacing	Reference
3/4” and smalle	5 feet	ANSI/MSS SP-69 & SP-58 Tables 3 & 4
1"	6 feet	ANSI/MSS SP-69 & SP-58 Tables 3 & 4

1-1/4”	7 feet	ANSI/MSS SP-69 & SP-58 Tables 3 & 4
1-1/2”	8 feet	ANSI/MSS SP-69 & SP-58 Tables 3 & 4
2"	8 feet	ANSI/MSS SP-69 & SP-58 Tables 3 & 4
2-1/2”	9 feet	ANSI/MSS SP-69 & SP-58 Tables 3 & 4
3"	10 feet	ANSI/MSS SP-69 & SP-58 Tables 3 & 4
3-1/2”	11 feet	ANSI/MSS SP-69 & SP-58 Tables 3 & 4
4"	12 feet	ANSI/MSS SP-69 & SP-58 Tables 3 & 4
5"	13 feet	ANSI/MSS SP-69 & SP-58 Tables 3 & 4
6"	14 feet	ANSI/MSS SP-69 & SP-58 Tables 3 & 4
8"	16 feet	ANSI/MSS SP-69 & SP-58 Tables 3 & 4
Gas Piping	Maximum Spacing	Reference
1/2"	6 feet	International Fuel Gas Code
3/4” & 1”	8 feet	International Fuel Gas Code
1-1/4” and larger	10 feet	International Fuel Gas Code

1.3 SUMMARY

A. Section Includes:
   1. Metal Pipe Hangers and Supports
   2. Thermal Hanger Shield Inserts
   3. Fastener Systems
   4. Pipe Stands
   5. Ductwork Supports
   6. Equipment Stands
   7. Equipment Supports

B. Related Requirements: All hangers and support systems shall be designed, selected, and installed by the Contractor to comply with the requirements listed in Section 230540 (Seismic Bracing for HVAC Systems).

C. Costs for hanger, support, and seismic bracing systems complying with the requirements listed herein are the responsibility of the Contractor and shall be included in the Contractor’s bid. No extra cost will be allowed for failure to include the associated costs in the Contractor’s bid.

D. In no case shall hangers and/or supports for HVAC piping, ductwork, or equipment be attached to a metal roof deck, unless provisions or allowances are explicitly shown on the structural drawings.

1.4 SUBMITTALS

A. Refer to Section 013300 - Submittal Requirements for submittal procedures.

B. Product Data: For each type of product.

C. Shop Drawings: Show fabrication and installation details for the following (Include product data for all components):
   1. Metal Framing (Strut) Systems
   2. Trapeze Pipe Hangers
   3. Pipe Stands
   4. Ductwork Supports
   5. Equipment Supports

D. Delegated Design Submittals: Provide delegated design submittals for items indicated to comply with performance requirements and design criteria, including analysis data signed and sealed by the qualified professional engineer responsible for their preparation.
   1. Details for fabrication and assembly of trapeze hangers.
   2. Design calculations utilized for designing the trapeze hangers.
   3. Design details and calculations for ductwork and equipment supports.

E. The work of this section shall be coordinated with the requirements for the Contractor furnished seismic design submittal for hangers and supports specified in Section 230540 (Seismic Bracing for HVAC Systems). Design and detailing of seismic bracing, hangers, and supports is the responsibility of the Contractor.

F. Submittals shall be fully coordinated with the structural drawings and shall include all applicable structural attachment details. Locations and the methods of attachment of hangers and supports to the main structural frame shall comply with the limitations specified in the structural drawings. Shop drawings shall include all vertical support anchorage loads. Each specific load shall be indicated in the submittals and the structural element that the support is attached to shall be clearly depicted/identified.

G. Shop drawing submittals will be reviewed by both the design mechanical engineer and the design structural engineer.

1.5 QUALITY ASSURANCE

A. Structural Steel Welding Qualifications: Qualify procedures and personnel according to AWS D1.1/D1.1M (Structural Welding Code - Steel).

B. Pipe Welding Qualifications: Qualify procedures and operators according to ASME Boiler and Pressure Vessel Code, Section IX.

P2 PRODUCTS

2.1 PERFORMANCE REQUIREMENTS

A. Delegated Design: Where required, engage a licensed professional engineer (licensed in the state where the project is located), to design trapeze pipe hangers/supports, ductwork hangers/supports, & equipment hangers/supports.

B. Structural Performance: Hangers and supports for HVAC piping, ductwork, and equipment shall withstand the effects of gravity loads and stresses within limits and under conditions indicated according to ASCE Standard 7-16.
   1. Design hangers/supports for piping, including pipe stands, capable of supporting combined weight of supported systems, system contents, and test water.
   2. Design hangers/supports for ductwork and associated accessories.
   3. Design equipment hangers/supports capable of supporting combined operating weight of supported equipment, including connected systems and components.
   4. Design seismic restraint hangers and supports for piping, ductwork, and equipment. See Section 230540 (Seismic Bracing for HVAC Systems).

2.2 DUCTWORK HANGERS AND SUPPORTS

A. Hanger Rods for Noncorrosive Environments: Galvanized steel rods and nuts.

B. Hanger Rods for Corrosive Environments: Electro-galvanized, all-thread rods, or galvanized rods with threads painted with zinc-chromate primer after installation.

C. Strap and Rod Sizes: Comply with SMACNA HVAC Duct Construction Standards - Metal and Flexible, Table 5-1 (Minimum Hanger Sizes for Rectangular Ducts) and Table 5-2 (Minimum Hanger Sizes for Round Ducts).

D. Steel Cables for Galvanized Steel Ducts: Galvanized steel complying with ASTM A603.

E. Steel Cables for Stainless Steel Ducts: Stainless steel complying with ASTM A492.

F. Steel Cable End Connections: Galvanized steel assemblies with brackets, swivel, and bolts designed for duct hanger service; with an automatic locking and clamping device.

G. Duct Attachments: Sheet metal screws, blind rivets, or self-tapping metal screws; compatible with duct materials.

H. Trapeze and Riser Supports:
   1. Supports for Galvanized Steel Ducts: Galvanized steel shapes and plates.
   2. Supports for Stainless Steel Ducts: Stainless steel shapes and plates.
   3. Supports for Aluminum Ducts: Aluminum or galvanized steel coated with zinc chromate.

2.3 METAL PIPE HANGERS AND SUPPORTS

A. Carbon Steel Pipe Hangers and Supports:
   1. Description: MSS SP-58, Types 1 through 58, factory fabricated components.
   2. Galvanized Metallic Coatings: Pre-galvanized, hot dip galvanized, or electro-galvanized.
   3. Non-Metallic Coatings: Plastic coated or epoxy powder coated.
   4. Padded Hangers: Hanger with fiberglass or other pipe insulation pad or cushion to support the bearing surface of the piping.
   5. Hanger Rods: Continuous thread rod, nuts, and washers made of carbon steel.

B. Stainless Steel Pipe Hangers and Supports:
   1. Description: MSS SP-58, Types 1 through 58, factory fabricated components.
   2. Padded Hangers: Hanger with fiberglass or other pipe insulation pad or cushion to support bearing surface of piping.
   3. Hanger Rods: Continuous thread rod, nuts, and washers made of carbon steel.

C. Copper Pipe and Tube Hangers:
   1. Description: MSS SP-58, Types 1 through 58, copper plated steel, factory fabricated components.
   2. Hanger Rods: Continuous thread rod, nuts, and washers made of carbon steel.

2.4 TRAPEZE PIPE HANGERS

A. Description: MSS SP-58, Type 59, shop or field fabricated pipe support assembly made from structural carbon steel shapes with MSS SP-58 carbon steel hanger rods, nuts, saddles, and U-bolts.

2.5 METAL FRAMING (STRUT) SYSTEMS

A. Metal Framing Manufacturers Association (MFMA) Metal Framing Systems:

1. Manufacturers: Subject to compliance with requirements, available manufacturers offering products that may be incorporated into the Work include the following:
   a. B-line
   b. Unistrut
   c. Flex-Strut
   d. G-Strut
   e. Miro Industries
2. Description: Shop or field fabricated, pipe support assembly made of steel channels, accessories, fittings, and other components for supporting multiple parallel pipes.
3. Standard: Comply with MFMA-4 factory fabricated components for field assembly.
4. Channels: Continuous slotted carbon steel channel with in-turned lips.
5. Channel Width: Selected for applicable load criteria.
6. Channel Nuts: Formed or stamped nuts or other devices designed to fit into channel slot and, when tightened, prevent slipping along channel.
7. Hanger Rods: Continuous thread rod, nuts, and washers made of carbon steel.
8. Metallic Coating: Zinc dichromate finish applied over an electro-galvanized zinc plating.

2.6 THERMAL HANGER SHIELD INSERTS

A. Manufacturers: Subject to compliance with requirements, available manufacturers offering products that may be incorporated into the Work include the following:
   1. Pipe Shields
   2. nVent/Caddy
   3. Buckaroos
   4. Carpenter & Paterson
   5. Piping Technology & Products
   6. Rilco Manufacturing
   7. Value Engineered Products

B. Standard Insulation Insert Material for Cold Piping: Polyisocyanurate high density insulation, with 125 psi minimum compressive strength, a flame spread/smoke developed rating of 25/50 or less, and vapor barrier.

C. Standard Insulation Insert Material for Hot Piping: Polyisocyanurate high density insulation, with 125 psi minimum compressive strength, a flame spread/smoke developed rating of 25/50 or less; or Calcium Silicate with 100 psi minimum compressive strength.

D. Structural/Seismic Insert Material for Cold Piping: Polyisocyanurate high density insulation, with a minimum density of 14 lbs/ft3, a minimum compressive strength of 900 psi, and a flame spread/smoke developed rating of 25/50 or less. Structural inserts shall be used as recommended by the insert manufacturer to meet load ratings.

E. Structural/Seismic Insert Material for Hot Piping: Calcium Silicate with a minimum density of 28 lbs/ft3 and a minimum compressive strength of 900 psi. Structural inserts shall be used as recommended by the insert manufacturer to meet load ratings.

F. For Trapeze or Clamped Systems: Insert and shield shall cover entire circumference of pipe.

G. For Clevis or Band Hangers: Insert and shield shall cover lower 180 degrees of pipe.

H. Insert Length: Extend 2 inches beyond sheet metal shield for piping operating below ambient air temperature.

I. Provide a vapor barrier steel jacket around insulation. Insulation jackets shall be galvanized steel conforming to ASTM A653. Hanger bearing surface shall consist of a galvanized sheet metal insulation protection shield or casing.

J. Thermal hanger supports shall be load rated. Load ratings shall be established by the pipe support manufacturer based upon testing and analysis in conformance with the current edition of following codes and standards: ASME B31.1, MSS SP-68, SP-69, and SP-89.

K. Unless otherwise indicated, thermal hanger supports shall be as indicated in the following schedule, or approved equal. The listed model numbers are based on Pipe Shields.
   1. Pipe supported on hangers: Models A2000, A4000, A9000, and D3000 series.
   2. Pipe supported on flat surfaces: Models A2000, A4000, A6000, A7000, A7200, and A7400.
   3. Pipe Supported on pipe rolls: Models A4000, A6000, A8200, and A8400.
   4. Pipe supported on slides and guides: Model B series.
   5. Riser pipe supports: Model E series.

L. The selected model(s) shall conform to pipe service, support style, and support spacing.

M. Pipe support spacing shall be in accordance with the manufacturer's recommendations, but in no case shall exceed the maximum spacing required by ASME B31.1.

2.7 FASTENER SYSTEMS

A. Powder Actuated Fasteners: Threaded steel stud, for use in hardened portland cement concrete with pull-out, tension, and shear capacities appropriate for supported loads and building materials where used.
   1. Manufacturers: Subject to compliance with requirements, available manufacturers offering products that may be incorporated into the Work include the following:
      a. Hilti
      b. ITW Ramset/Red Head
      c. MKT Fastening
      d. Simpson Strong-Tie

B. Mechanical Expansion Anchors: Insert wedge type anchors for use in hardened portland cement concrete; with pull-out, tension, and shear capacities appropriate for supported loads and building materials where used.
   1. Indoor Applications: Zinc-coated stainless steel.
   2. Outdoor Applications: Stainless steel.
   3. Manufacturers: Subject to compliance with requirements, available manufacturers offering products that may be incorporated into the Work include the following:
      a. Hilti
      b. ITW Ramset/Red Head
      c. MKT Fastening
      d. B-line

2.8 PIPE STANDS

A. General Requirements for Pipe Stands: Shop or field fabricated assemblies made of manufactured corrosion resistant components to support roof mounted piping.

B. Compact Pipe Stand:

1. Manufacturers: Subject to compliance with requirements, available manufacturers offering products that may be incorporated into the Work include, but are not limited to, the following:
   a. Miro Industries
   b. PHP Systems/Design
   c. RectorSeal HVAC
   d. Rooftop Support Systems
2. Description: Single base unit with integral rod roller, pipe clamps, or V-shaped cradle to support pipe, for roof installation without membrane penetration.
3. Base: Single, vulcanized rubber, molded polypropylene, or polycarbonate.
4. Hardware: Galvanized steel or polycarbonate.
5. Accessories: Protection pads.

C. Low Profile, Single Base, Single Pipe Stand:
1. Manufacturers: Subject to compliance with requirements, available manufacturers offering products that may be incorporated into the Work include, but are not limited to, the following:
   a. Miro Industries
   b. PHP Systems/Design
   c. Rooftop Support Systems
2. Description: Single base with vertical and horizontal members, and pipe support, for roof installation without membrane protection.
3. Base: Single, vulcanized rubber, molded polypropylene, or polycarbonate.
4. Vertical Members: Two, galvanized stainless steel, continuous thread 1/2 inch rods.
5. Horizontal Member: Adjustable horizontal, galvanized stainless steel pipe support channels.
6. Pipe Supports: Roller strut clamps, clevis hanger, or swivel hanger.
7. Hardware: Galvanized stainless steel.
8. Accessories: Protection pads.
9. Height: 12 inches above roof Insert lesser dimension above roof.

D. High Profile, Single Base, Single Pipe Stand:
1. Manufacturers: Subject to compliance with requirements, available manufacturers offering products that may be incorporated into the Work include, but are not limited to, the following:
   a. Miro Industries
   b. PHP Systems/Design
   c. Rooftop Support Systems
2. Description: Single base, vertical and horizontal members, and pipe support, for roof installation without membrane penetration.
3. Base: Single vulcanized rubber or molded polypropylene.
4. Vertical Members: Two, galvanized stainless steel, continuous thread 1/2 inch rods.
5. Horizontal Member: One, adjustable height, galvanized stainless steel pipe support slotted channel or plate.
6. Pipe Supports: Roller strut clamps, clevis hanger, swivel hanger.
7. Hardware: Galvanized stainless steel.
8. Accessories: Protection pads, 1/2 inch continuous thread galvanized steel rod, 1/2 inch continuous thread stainless steel rod.
9. Height: 36 inches above roof Insert lesser dimension above roof.

E. High Profile, Multiple Pipe Stand:
   1. Manufacturers: Subject to compliance with requirements, available manufacturers offering products that may be incorporated into the Work include, but are not limited to, the following:
      a. Miro Industries
      b. PHP Systems/Design
      c. RectorSeal HVAC
      d. Rooftop Support Systems
   2. Description: Assembly of bases, vertical and horizontal members, and pipe supports, for roof installation without membrane penetration.
   3. Bases: Two or more; vulcanized rubber molded polypropylene insert material.
   4. Vertical Members: Two or more, galvanized stainless steel channels.
   5. Horizontal Members: One or more, adjustable height, galvanized stainless steel pipe supports.
   6. Pipe Supports: Roller strut clamps, clevis hanger, swivel hanger.
   7. Hardware: Galvanized stainless steel.
   8. Accessories: Protection pads, 1/2 inch continuous thread rod.
   9. Height: 24 inches above the roof or as indicated on the drawings.

F. Curb Mounted Type Pipe Stands: Shop or field fabricated pipe supports made from structural steel shapes, continuous thread rods, and rollers, for mounting on permanent stationary roof curb.

2.9 EQUIPMENT SUPPORTS

A. Description: Welded, shop or field fabricated equipment supports made from structural carbon steel shapes.

2.10 OUTDOOR EQUIPMENT STANDS

A. Manufacturers: Subject to compliance with requirements, available manufacturers offering products that may be incorporated into the Work include, but are not limited to, the following:
   1. MIRO Industries
   2. RectorSeal HVAC
   3. Rooftop Support Systems

B. Description
   1. Description: Individual foot supports with elevated adjustable channel cross bars and clamps/fasteners/bolts for ground or roof supported outdoor equipment components, without roof membrane penetration, in a pre-fabricated system that can be modularly assembled on site.
   2. Foot Material: Rubber or polypropylene.
   3. Rails Material: Hot dip galvanized carbon steel.
   4. Wind/Sliding Load Resistance: Up to 120 mph, or as indicated on the structural drawings.

2.11 MATERIALS

A. Aluminum: ASTM B221.

B. Carbon Steel: ASTM A1011/A1011M.

C. Structural Steel: ASTM A36/A36M, carbon steel plates, shapes, and bars; galvanized.

D. Stainless Steel: ASTM A240/A240M.

E. Threaded Rods: Continuously threaded. Zinc plated or galvanized steel for indoor applications and stainless steel for outdoor applications. Mating nuts and washers shall be same or similar materials as rods.

F. Grout: ASTM C1107/C1107M, factory mixed and packaged, dry hydraulic cement, non-shrink and non-metallic grout; suitable for interior and exterior applications.
   1. Properties: Non-staining, non-corrosive, and non-gaseous.
   2. Design Mix: 5,000 psi, 28 day compressive strength.

PART 3 EXECUTION

3.1 APPLICATION

A. Comply with all requirements in other section of the specifications for firestopping materials and installation for penetrations through fire rated walls, ceilings, and assemblies.

B. Strength of Support Assemblies: Where not indicated, select sizes of components so strength will be adequate to carry present and future static loads within specified loading limits. Minimum static design load used for strength determination shall be weight of supported components plus 200 lbs.

3.2 HANGER AND SUPPORT INSTALLATION

A. Metal Pipe Hanger Installation: Comply with MSS SP-58. Install hangers, supports, clamps, and attachments as required to properly support piping from the building structure.

B. Metal Trapeze Pipe Hanger Installation: Comply with MSS SP-58. Arrange for grouping of parallel runs of horizontal piping, and support together on field fabricated trapeze pipe hangers.
   1. Pipes of Various Sizes: Support together and space trapezes for smallest pipe size or install intermediate supports for smaller diameter pipes as specified for individual pipe hangers.
   2. Field fabricate from ASTM A36/A36M, carbon-steel shapes selected for loads being supported. Weld steel according to AWS D1.1/D1.1M.

C. Thermal Hanger Shield Installation: Install in pipe hanger or shield for insulated piping.

D. Fastener System Installation:
   1. Install powder actuated fasteners for use in lightweight concrete or concrete slabs less than 4 inches thick in concrete after concrete is placed and completely cured. Use operators that are licensed by powder actuated tool manufacturer. Install fasteners according to powder actuated tool manufacturer's operating manual.
   2. Install mechanical expansion anchors in concrete after concrete is placed and completely cured. Install fasteners according to manufacturer's written instructions.

E. Pipe Stand Installation:
   1. Pipe Stand Types Except Curb Mounted Type: Assemble components and mount on smooth roof surface. Do not penetrate the roof membrane.
   2. Curb Mounted Type Pipe Stands: Assemble components or fabricate pipe stands and mounts on a permanent, stationary roof curb.

F. Install hangers and supports complete with necessary attachments, inserts, bolts, rods, nuts, washers, and other accessories.

G. Equipment Support Installation: Fabricate from welded structural steel shapes.

H. Install hangers and supports to allow controlled thermal and seismic movement of piping systems, to permit freedom of movement between pipe anchors, and to facilitate action of expansion joints, expansion loops, expansion bends, and similar units.

I. Install lateral bracing with pipe hangers and supports to prevent swaying.

J. Install building attachments within concrete slabs or attach to structural steel. Install additional attachments at concentrated loads, including valves, flanges, and strainers, 2-1/2" pipe size and larger and at changes in direction of piping. Install concrete inserts before concrete is placed; fasten inserts to forms and install reinforcing bars through openings at top of inserts.

K. Load Distribution: Install hangers and supports so that piping live and dead loads and stresses from movement will not be transmitted to connected equipment.

L. Pipe Slopes: Install hangers and supports to provide indicated pipe slopes and to not exceed maximum pipe deflections allowed by ASME B31.9 for building services piping.

M. Insulated Piping:
   1. Attach clamps and spacers to piping.
      a. Piping Operating above Ambient Air Temperature: Clamp may project through insulation.
      b. Piping Operating below Ambient Air Temperature: Use thermal hanger shield insert with clamp sized to match OD of insert.
      c. Do not exceed pipe stress limits allowed by ASME B31.9 for building services piping.
   2. Install MSS SP-58, Type 39, protection saddles if insulation without vapor barrier is indicated. Fill interior voids with insulation that matches adjoining insulation. Optional: Thermal hanger shield inserts may be used. Include steel weight distribution plate for pipe NPS 4 and larger if pipe is installed on rollers.
   3. Install MSS SP-58, Type 40, protective shields on cold piping with vapor barrier. Shields shall span an arc of 180 degrees. Optional: Thermal hanger shield inserts may be used. Include steel weight distribution plate for pipes 4" and larger if pipe is installed on rollers.
   4. Shield Dimensions for Pipe: Not less than the following:
      a. 1/2" to 3-1/2" pipe: 12 inches long and 0.048 inch thick.
      b. 4" pipe: 12 inches long and 0.06 inch thick.
      c. 4" and 5" pipe: 18 inches long and 0.06 inch thick.
      d. 8" thru 14" pipe: 24 inches long and 0.075 inch thick.
      e. 16" thru 24" pipe: 24 inches long and 0.105 inch thick.
   5. Pipes 8" and Larger: Include wood or reinforced calcium silicate insulation inserts of length at least as long as protective shield.
   6. Thermal Hanger Shields: Install with insulation same thickness as piping insulation.

3.3 EQUIPMENT HANGERS/SUPPORTS

A. Fabricate structural steel supports to suspend equipment from structure overhead or structural steel stands to support equipment above the floor.

B. Grouting: Place grout under supports for equipment and make bearing surface smooth.

C. Provide lateral bracing for equipment supports to prevent swaying.

3.4 DUCTWORK HANGERS/SUPPORTS

A. Fabricate structural steel supports to suspend ductwork from structure overhead.

B. Fabricate structural steel stands to support ductwork above the floor (when indicated on the drawings). Provide lateral bracing for ductwork supports to prevent swaying.

3.5 METAL FABRICATIONS

A. Cut, drill, and fit miscellaneous metal fabrications for trapeze pipe hangers and equipment supports.

B. Fit exposed connections together to form hairline joints. Field weld connections that cannot be shop welded because of shipping size limitations.

C. Field Welding: Comply with AWS D1.1/D1.1M procedures for shielded, metal arc welding; appearance and quality of welds; and methods used in correcting welding work; and with the following:
   1. Use materials and methods that minimize distortion and develop strength and corrosion resistance of base metals.
   2. Obtain fusion without undercut or overlap.
   3. Remove welding flux immediately.
   4. Finish welds at exposed connections so no roughness shows after finishing and so contours of welded surfaces match adjacent contours.

3.6 ADJUSTING

A. Hanger Adjustments: Adjust hangers to distribute loads equally on attachments and to achieve indicated slope of pipe.

B. Trim excess length of continuous thread hanger and support rods to 1-1/2 inches.

3.7 PAINTING

A. Touchup: Clean field welds and abraded areas of shop paint. Paint exposed areas immediately after erecting hangers and supports. Use same materials as used for shop painting. Comply with SSPC-PA 1 requirements for touching up field painted surfaces.
   1. Apply paint by brush or spray to provide a minimum dry film thickness of 2.0 mils.

B. Galvanized Surfaces: Clean welds, bolted connections, and abraded areas and apply galvanizing repair paint to comply with ASTM A780/A780M.

3.8 HANGER AND SUPPORT SCHEDULE

A. Specific hanger and support requirements are in sections specifying piping, ductwork, and equipment.

B. Comply with MSS SP-58 for pipe hanger selections and applications that are not specified in piping system sections.

C. Use hangers and supports with galvanized metallic coatings for piping, ductwork, and equipment that will not have field applied finish.

D. Use nonmetallic coatings on attachments for electrolytic protection where attachments are in direct contact with copper tubing.

E. Use carbon steel pipe hangers and supports metal trapeze pipe hangers and metal framing systems and attachments for general service applications.

F. Use copper plated pipe hangers and copper or stainless steel attachments for copper piping and tubing.

G. Use padded hangers for piping that is subject to scratching.

H. Use thermal hanger shield inserts for insulated piping and tubing.

I. Horizontal Piping Hangers and Supports: Unless otherwise indicated and except as specified in piping system sections, install the following types:
   1. Adjustable, Steel Clevis Hangers (MSS Type 1): For suspension of non-insulated or insulated, stationary pipes 1/2” thru 30” size.
   2. Yoke Type Pipe Clamps (MSS Type 2): For suspension of up to 1050°F, pipes 4” thru 24” size, requiring up to 4 inches of insulation.
   3. Carbon or Alloy Steel, Double Bolt Pipe Clamps (MSS Type 3): For suspension of pipes 3/4” thru 36” size, requiring clamp flexibility and up to 4 inches of insulation.
   4. Steel Pipe Clamps (MSS Type 4): For suspension of cold and hot pipes 1/2” thru 24” size if little or no insulation is required.
   5. Pipe Hangers (MSS Type 5): For suspension of pipes 1/2” thru 4” size, to allow off center closure for hanger installation before pipe erection.
   6. Adjustable Swivel Split or Solid Ring Hangers (MSS Type 6): For suspension of non-insulated, stationary pipes 3/4” thru 8” size.
   7. Adjustable, Steel Band Hangers (MSS Type 7): For suspension of non-insulated, stationary pipes 1/2” thru 8” size.
   8. Adjustable Band Hangers (MSS Type 9): For suspension of non-insulated, stationary pipes 1/2” thru 8” size.
   9. Adjustable, Swivel Ring Band Hangers (MSS Type 10): For suspension of non-insulated, stationary pipes 1/2” thru 8” size.
   10. Split Pipe Ring with or without Turnbuckle Hangers (MSS Type 11): For suspension of non-insulated, stationary pipes 3/8” thru 8” size.
   11. Extension Hinged or Two Bolt Split Pipe Clamps (MSS Type 12): For suspension of non-insulated, stationary pipes 3/8” thru 3” size.
   12. U-Bolts (MSS Type 24): For support of heavy pipes 1/2” thru 30” size.
   13. Clips (MSS Type 26): For support of insulated pipes not subject to expansion or contraction.
   14. Pipe Saddle Supports (MSS Type 36): For support of pipes 4” thru 36” size, with steel pipe base stanchion support and cast iron floor flange or carbon steel plate.
   15. Pipe Stanchion Saddles (MSS Type 37): For support of pipes 4” thru 36” size, with steel pipe base stanchion support and cast iron floor flange or carbon steel plate, and with U-bolt to retain pipe.
   16. Adjustable Pipe Saddle Supports (MSS Type 38): For stanchion type support for pipes 2-1/2” thru 36” size if vertical adjustment is required, with steel pipe base stanchion support and cast iron floor flange.
   17. Single Pipe Rolls (MSS Type 41): For suspension of pipes 1” thru 30” size , from two rods if longitudinal movement caused by expansion and contraction might occur.

18. Adjustable Roller Hangers (MSS Type 43): For suspension of pipes 2-1/2" thru 24" size, from single rod if horizontal movement caused by expansion and contraction might occur.
19. Complete Pipe Rolls (MSS Type 44): For support of pipes 2" thru 42" size if longitudinal movement caused by expansion and contraction might occur but vertical adjustment is unnecessary.
20. Pipe Roll and Plate Units (MSS Type 45): For support of pipes 2" thru 24" size if small horizontal movement caused by expansion and contraction might occur and vertical adjustment is unnecessary.
21. Adjustable Pipe Roll and Base Units (MSS Type 46): For support of pipes 2" thru 30" size if vertical and lateral adjustment during installation might be required in addition to expansion and contraction.

J. Vertical Piping Clamps: Unless otherwise indicated and except as specified in piping system sections, install the following types:
   1. Extension Pipe or Riser Clamps (MSS Type 8): For support of pipe risers 3/4" thru 24".
   2. Carbon or Alloy Steel Riser Clamps (MSS Type 42): For support of pipe risers 3/4" thru 24" size if longer ends are required for riser clamps.

K. Hanger Rod Attachments: Unless otherwise indicated and except as specified in piping system sections, install the following types:
   1. Steel Turnbuckles (MSS Type 13): For adjustment up to 6 inches for heavy loads.
   2. Steel Clevises (MSS Type 14): For 120 to 450°F piping installations.
   3. Swivel Turnbuckles (MSS Type 15): For use with MSS Type 11, split pipe rings.
   4. Malleable Iron Sockets (MSS Type 16): For attaching hanger rods to various types of building attachments.
   5. Steel Weldless Eye Nuts (MSS Type 17): For 120 to 450°F piping installations.

L. Building Attachments: Unless otherwise indicated and except as specified in piping system sections, install the following types:
   1. Steel or Malleable Concrete Inserts (MSS Type 18): For upper attachment to suspend pipe hangers from concrete ceiling.
   2. Top Beam C-Clamps (MSS Type 19): For use under roof installations with bar-joist construction, to attach to top flange of structural shape.
   3. Side Beam or Channel Clamps (MSS Type 20): For attaching to bottom flange of beams, channels, or angles.
   4. Center Beam Clamps (MSS Type 21): For attaching to center of bottom flange of beams.
   5. Welded Beam Attachments (MSS Type 22): For attaching to bottom of beams if loads are considerable and rod sizes are large.
   6. C-Clamps (MSS Type 23): For structural shapes.
   7. Top-Beam Clamps (MSS Type 25): For top of beams if hanger rod is required tangent to flange edge.
   8. Side Beam Clamps (MSS Type 27): For bottom of steel I-beams.
   9. Steel Beam Clamps with Eye Nuts (MSS Type 28): For attaching to bottom of steel I-beams for heavy loads.
   10. Linked-Steel Clamps with Eye Nuts (MSS Type 29): For attaching to bottom of steel I-beams for heavy loads, with link extensions.
   11. Malleable Beam Clamps with Extension Pieces (MSS Type 30): For attaching to structural steel.

12. Welded Steel Brackets: For support of pipes from below or for suspending from above by using clip and rod. Use one of the following for indicated loads:
    a. Light (MSS Type 31): 750 lbs.
    b. Medium (MSS Type 32): 1500 lbs.
    c. Heavy (MSS Type 33): 3000 lbs.
13. Side Beam Brackets (MSS Type 34): For sides of steel or wooden beams.
14. Plate Lugs (MSS Type 57): For attaching to steel beams if flexibility at beam is required.
15. Horizontal Travelers (MSS Type 58): For supporting piping systems subject to linear horizontal movement where headroom is limited.

M. Saddles and Shields: Unless otherwise indicated and except as specified in piping system sections, install the following types:
    1. Steel Pipe Covering Protection Saddles (MSS Type 39): To fill interior voids with insulation that matches adjoining insulation.
    2. Protection Shields (MSS Type 40): Of length recommended in writing by manufacturer to prevent crushing insulation.
    3. Thermal Hanger Shield Inserts: For supporting insulated pipe.

N. Spring Hangers and Supports: Unless otherwise indicated and except as specified in piping system sections, install the following types:
    1. Restraint Control Devices (MSS Type 47): Where indicated to control piping movement.
    2. Spring Cushions (MSS Type 48): For light loads if vertical movement does not exceed 1-1/4 inches.
    3. Spring Cushion Roll Hangers (MSS Type 49): For equipping Type 41, roll hanger with springs.
    4. Spring Sway Braces (MSS Type 50): To retard sway, shock, vibration, or thermal expansion in piping systems.
    5. Variable Spring Hangers (MSS Type 51): Preset to indicated load and limit variability factor to 25 percent to allow expansion and contraction of piping system from hanger.
    6. Variable Spring Base Supports (MSS Type 52): Preset to indicated load and limit variability factor to 25 percent to allow expansion and contraction of piping system from base support.
    7. Variable Spring Trapeze Hangers (MSS Type 53): Preset to indicated load and limit variability factor to 25 percent to allow expansion and contraction of piping system from trapeze support.
    8. Constant Supports: For critical piping stress and if necessary, to avoid transfer of stress from one support to another support, critical terminal, or connected equipment. Include auxiliary stops for erection, hydrostatic test, and load adjustment capability. These supports include the following types:
        a. Horizontal (MSS Type 54): Mounted horizontally.
        b. Vertical (MSS Type 55): Mounted vertically.
        c. Trapeze (MSS Type 56): Two vertical type supports and one trapeze member.

O. Comply with MSS SP-58 for trapeze pipe hanger selections and applications that are not specified in piping system sections.

P. Comply with MFMA-103 for metal framing system selections and applications that are not specified in piping system sections.

Q. Use powder actuated fasteners and mechanical expansion anchors instead of building attachments where required in concrete construction.

END OF SECTION

SECTION 230540 - SEISMIC BRACING FOR HVAC SYSTEMS

PART 1 - GENERAL

1.1 CONDITIONS OF THE CONTRACT

A. Section 230000 (Heating, Ventilating, and Air Conditioning), Section 230500 (Basic Materials and Methods for HVAC), and Section 230530 (Hangers and Supports for HVAC Systems) are hereby made a part of this section.

1.2 GENERAL

A. Seismic bracing for mechanical systems (equipment, ductwork, piping, and conduit) shall comply with all applicable requirements of the latest adopted edition of the International Building Code (IBC) including all applicable provisions of the latest adopted edition of the American Society of Civil Engineers (ASCE) Minimum Design Loads for Buildings and Other Structures (ASCE Standard 7-16). Basic seismic design criteria for each project shall be as listed on the structural drawings for that project.

B. The anchorage calculations shall show compliance with the latest adopted edition of the American Concrete Institute (ACI) Standards, Handbooks, and Manuals where anchoring to concrete for the project-specific loads and conditions, including project specific calculations for anchors, clips, and fasteners.

C. Anchorage calculations for seismic roof curbs shall be included in seismic roof curb submittal, including a stamped plan or detail showing the anchorage requirement. This detail shall include specific anchor type, diameter, embedment, and layout or spacing.

D. Compliance with the applicable seismic bracing requirements for equipment, ductwork, piping, and conduit shall be accomplished utilizing the most current version of one of the following design manuals, or approved equal.
   1. International Seismic Application Technology (ISAT) Design Manual
   2. Mason Industries Seismic Restraint Design Manual
   3. Vibro-Acoustics Seismic Design Manual
   4. SMACNA Seismic Restraint Manual (Guidelines for Mechanical Systems)

E. Component Importance Factors (Ip) for all equipment, ductwork, piping, and conduit shall be determined and assigned in accordance with ASCE Standard 7-16 Section 13.1.3.

F. Design and detailing of seismic bracing, hangers, and supports for equipment, ductwork, piping, and conduit is the responsibility of the Contractor.

G. The work of this section shall be coordinated with the requirements for the Contractor furnished delegated design submittal for hangers and supports specified in Section 230530 (Hangers and Supports for HVAC Systems). Design and detailing of seismic bracing, hangers, and supports is the responsibility of the Contractor.

1.3 SUBMITTALS

A. Refer to Section 013300 - Submittal Requirements for submittal procedures.

B. The Contractor shall provide the required number of seismic shop drawing submittal sets for review and approval by the Engineer. Submittals shall include a comprehensive set of shop

drawings clearly depicting the seismic bracing requirements for all equipment, ductwork, piping, and conduit. Any piping or conduit that does not require seismic bracing shall be specifically identified in the submittal, and the reason for exemption shall be provided. Cite any and all references for the exemption. In cases where seismic bracing is not required due to the supported items being less than 12 inches below the supporting structure, a single note may be provided to cover those locations.

C. Submittals shall be fully coordinated with the structural drawings and shall include all applicable structural attachment details. Seismic bracing shop drawings shall include all vertical support anchorage loads and all seismic bracing anchorage loads. Each specific load shall be indicated and the structural element that the support is attached to shall be clearly depicted/identified. Seismic bracing submittals shall be stamped and signed by a structural or civil engineer with current registration licensed in the State of Nevada (or licensed in the state where the project is located, if the project is located outside the State of Nevada).

D. Seismic shop drawing submittals will be reviewed by both the design mechanical engineer and the design structural engineer.

1.4 SITE VISITS (QUALITY CONTROL)

A. An authorized representative of the seismic bracing system manufacturer shall visit the job site during the construction period to confirm that the seismic bracing installation complies with the shop drawings, with all applicable code requirements, and with the seismic bracing system manufacturer's written installation requirements and associated details. As a minimum, an authorized representative shall visit the site when the seismic bracing installation is complete (and prior to installation of the ceilings).

B. A written report shall be issued within one week the site visit summarizing the observations made during the site visit and listing all required corrective actions and/or deficiencies. The report shall be made available to both the design mechanical engineer and the design structural engineer.

C. After all equipment installation is complete and all seismic bracing has been verified, the authorized representative that conducted the field verification shall issue a letter certifying that the installation is complete and that the installation complies with the specified requirements

D. Site visits shall be coordinated with the Owner and shall be scheduled in writing a minimum of one week prior to the proposed site visit date.

PART 2 PRODUCTS - NOT APPLICABLE

PART 3 EXECUTION - NOT APPLICABLE

END OF SECTION

SECTION 230700 - HVAC INSULATION

PART 1 - GENERAL

1.1 CONDITIONS OF THE CONTRACT

A. Sections 230000 (Heating, Ventilating, and Air Conditioning) and 230500 (Basic Materials and Methods for HVAC) are hereby made a part of this section.

1.2 WORK INCLUDED

A. Types of mechanical insulation specified in this section include the following:
   1. Piping System Insulation:
      a. Heating Water Supply and Return Piping
      b. Chilled Water Supply and Return Piping
      c. Condenser Water Supply and Return Piping
      d. Heat Pump Loop Supply and Return Piping
      e. Cold Water Make-Up Piping (Outdoors)
      f. Condensate Drains
      g. High Temperature Hot Water Supply and Return Piping
      h. Steam and Condensate Piping
      i. Refrigerant Piping
   2. Ductwork System Insulation:
      a. Supply Air and Return Air Ducts
      b. Outside Air Intake Ducts
      c. Clothes Dryer Exhaust Ducts
      d. Kitchen Hood Exhaust Ducts
      e. Lab Hood Exhaust Ducts
   3. Equipment Insulation:
      a. Chilled and Heating Water Equipment
      b. Chilled Water Pumps
      c. Chilled Water Air Separator
      d. Heating Water Air Separator
      e. Heat Pump Loop Pumps
      f. Heat Pump Loop Air Separator
      g. Removable Insulating Jackets
      h. Emergency Generator Exhaust

1.3 QUALITY ASSURANCE

A. Manufacturer's Qualifications: Firm regularly engaged in manufacture of mechanical insulation products, of types and sizes required, whose products have been in satisfactory use in similar service for not less than 5 years.

B. Installer Qualifications: Insulation specialty firm with at least 5 years successful installation experience on projects with mechanical insulations similar to that required for this project.

C. SMACNA Compliance: Comply with applicable portions of Sheet Metal and Air Conditioning Contractor's National Association (SMACNA) recommendations for all work in this section.

D. ASHRAE Standards: Comply with applicable portions of American Society of Heating, Refrigerating, and Air Conditioning Engineers (ASHRAE) recommendations for all work in this section.

E. NFPA Standards: Comply with applicable portions of ANSI/NFPA Standard 90A (Standard for the Installation of Air Conditioning and Ventilating Systems) and ANSI/NFPA 90B (Standard for the Installation of Warm Air Heating and Air Conditioning Systems) for all work in this section.

F. NAIMA Standards: Comply with all applicable portions of the North American Insulation Manufacturers Association (NAIMA) standards for all related work in this section.

G. MICA Standards: Comply with all applicable portions of the Midwest Insulation Contractors Association standards for all related work in this section.

H. Install thermal insulation products on equipment in accordance with manufacturer's written instructions and in accordance with recognized industry practices to ensure that insulation serves its intended purpose.

1.4 SUBMITTALS

A. Refer to Section 013300 - Submittal Requirements for submittal procedures.

B. Product Data: Submit manufacturer's technical product data and installation instructions for each type of insulation. Submit schedule showing manufacturer's product number, k-Value, thickness, density, and furnished accessories for each mechanical system requiring insulation. Include complete description of installation methods with this submittal.

PART 2 - PRODUCTS

2.1 PIPE INSULATION MATERIALS

A. General: All pipe insulation conductivities and thicknesses shall meet or exceed the requirements listed in 2018 International Energy Conservation Code Table C403.11.3. All conductivity values listed in this specification section are in Btu-in/(hr-ft2-°F).

B. Flame/Smoke Spread Ratings: Insulation installed inside the building shall consist of composite mechanical insulation (insulation, jackets, coverings, sealers, mastics, and adhesives) with a flame spread rating of 25 or less and a smoke developed index of 50 or less, in accordance with ASTM E84.

C. Kitchens, Hospitals, and Pharmacies: All insulated piping exposed in kitchen, hospital, and/or pharmacy areas shall be covered with Type 304 stainless steel jacketing secured with 3/4” wide stainless steel bands at 12” on center.

D. Aluminum Jacketing shall be Johns Manville ‘JM Aluminum Jacketing’ with ‘Polyfilm Moisture Barrier’ and stucco-embossed finish, or approved equal, and shall be installed in conformance with the manufacturer’s written instructions. Secure jacketing with 3/4” wide Type 304 stainless steel bands at 12” on center. Finish all cold fittings as required to provide a vapor-tight seal. Aluminum and/or stainless steel jacketing shall be provided in the following thicknesses:
   1. For Insulation Outside Diameters under 8”: .016 inch thick jacketing
   2. For Insulation Outside Diameters 8” thru 24”: .024 inch thick jacketing

E. Lower Level Exposed in all piping applications shall mean any exposed pipe in a mechanical room, mezzanine area, or other accessible space that is less than 8’-0” above finished floor.

F. Higher Level Exposed in all piping applications shall mean any exposed pipe in a mechanical room, mezzanine area, or other accessible space that is 8’-0” or more above finished floor.

G. Fiberglass Insulation (Concealed Applications)
   1. Fiberglass insulation shall be Johns Manville Microlok HP, or approved equal, with factory-applied fire-retardant ASJ jacket, self-sealing laps, and shall be applied per manufacturer's written recommendations. Conductivity shall be 0.23 at 75°F, 0.25 at 125°F, and 0.28 at 200°F. Insulation shall be rated for applications from 0°F up to 850°F. Insulation flame spread/smoke developed rating shall be 25/50 or less in accordance with ASTM E84.
   2. Insulate and cover all fittings with Johns Manville Zeston Series 2000 standard gauge pre-molded fitting covers secured with serrated tacks, adhesive, and/or Zeston Z-Tape.
   3. Install a segment of rigid calcium silicate insulation at each pipe hanger for pipe sizes 2-1/2 inches and larger.
   4. Finish all cold fittings with Zeston Z-tape to provide a vapor-tight seal.
   5. Seal all raw ends of insulation with Childers CP-10 weather barrier sealant, or equal.
   6. Available Manufacturers: Subject to compliance with requirements, manufacturers offering products which may be incorporated in the work include the following:
      a. Johns Manville, CertainTeed, Owens Corning

H. Fiberglass Insulation (Lower Level Exposed Applications)
   1. Fiberglass insulation shall be Johns Manville Microlok HP, or approved equal, with factory-applied fire-retardant ASJ jacket, self-sealing laps, and shall be applied per manufacturer's written recommendations. Conductivity shall be 0.23 at 75°F, 0.25 at 125°F, and 0.28 at 200°F. Insulation shall be rated for applications from 0°F up to 850°F. Insulation flame spread and smoke developed rating shall be 25/50 or less in accordance with ASTM E84. Lower level exposed piping shall be covered with aluminum jacketing.
   2. Insulate and cover all fittings with aluminum jacketing and aluminum fitting covers.
   3. Install a segment of rigid calcium silicate insulation at each pipe hanger for pipe sizes 2-1/2 inches and larger.
   4. Finish all cold fittings with Zeston Z-tape to provide a vapor-tight seal.
   5. Seal all raw ends of insulation with Childers CP-10 weather barrier sealant, or equal.
   6. Available Manufacturers: Subject to compliance with requirements, manufacturers offering products which may be incorporated in the work include the following:
      a. Johns Manville, CertainTeed, Owens Corning

I. Fiberglass Insulation (Higher Level Exposed Applications)
   1. Fiberglass insulation shall be Johns Manville Microlok HP Ultra with performance characteristics as specified for Johns Manville Microlok HP insulation plus a factory-applied polypropylene coating that is cleanable/washable.
   2. Insulate and cover all fittings with Johns Manville Zeston Series 2000 standard gauge pre-molded fitting covers secured with serrated tacks, adhesive, and/or Zeston Z-Tape.
   3. Install a segment of rigid calcium silicate insulation at each pipe hanger for pipe sizes 2-1/2 inches and larger.
   4. Finish all cold fittings with Zeston Z-tape to provide a vapor-tight seal.
   5. Seal all raw ends of insulation with Childers CP-10 weather barrier sealant, or equal.

6. Available Manufacturers: Subject to compliance with requirements, manufacturers offering products which may be incorporated in the work include the following:
   a. Johns Manville, CertainTeed, Owens Corning

J. Closed Cell Polyisocyanurate Insulation with Aluminum Jacketing
   1. Closed cell polyisocyanurate insulation shall be Johns Manville Trymer 25-50 with vapor retarder film, and aluminum jacketing, or approved equal. Install insulation and jacketing per the manufacturer's written recommendations. Conductivity shall be 0.19 at 75°F, 0.23 at 125°F, and 0.26 at 200°F. Insulation shall be rated for applications from 0°F up to 300°F. Insulation flame spread and smoke developed rating shall be 25/50 or less in accordance with ASTM E84.
   2. Covering: Cover pipe and fitting insulation with Johns Manville Saranex 540-CX vapor retarder film and Saranex vapor retarder tape. Finish all cold fittings as required to provide a vapor-tight seal.
   3. Jacketing: Cover pipe and fitting insulation with stucco-embossed aluminum jacketing.

K. Closed Cell Phenolic Foam Insulation with Aluminum Jacketing
   1. Closed cell phenolic foam insulation shall be Thermal Pipe Shields Phenolic Foam, or approved equal. Install insulation and jacketing per the manufacturer's written recommendations. Conductivity shall be 0.152 at 75°F, 0.19 at 125°F, and 0.25 at 200°F. Insulation shall be rated for applications from 0°F up to 248°F. Insulation flame spread and smoke developed rating shall be 25/50 or less in accordance with ASTM E84.
   2. Jacketing: Cover pipe and fitting insulation with stucco-embossed aluminum jacketing.

L. Closed Cell Foamglas Insulation with Aluminum Jacketing
   1. Closed cell foam insulation shall be Owens Corning Foamglas One, or approved equal, and shall be installed per manufacturer's recommendations. Conductivity shall be 0.29 at 75°F, 0.33 at 125°F, and .38 at 200°F. Insulation shall be rated for applications from 0°F up to 900°F. Insulation flame spread and smoke developed rating shall be 25/50 or less in accordance with ASTM E84.
   2. Jacketing: Cover pipe and fitting insulation with stucco-embossed aluminum jacketing.

M. Calcium Silicate Insulation with Aluminum Jacketing
   1. Calcium silicate insulation shall be Johns Manville Thermo-1200, or approved equal, and shall be installed per manufacturer’s written recommendations. Conductivity shall be 0.36 at 125°F and 0.39 at 200°F. Insulation shall be rated for hot water, steam, or steam condensate applications up to 1200°F. Insulation flame spread and smoke developed rating shall be 25/50 or less in accordance with ASTM E84.
   2. Jacketing: Cover pipe and fitting insulation with stucco-embossed aluminum jacketing.
   3. Available Manufacturers: Subject to compliance with requirements, manufacturers offering products which may be incorporated in the work include the following:
      a. Johns Manville
      b. Thermal Pipe Shields

2.2 HEATING WATER PIPING 141°F THRU 200°F (INDOORS)

A. Insulate lower level exposed heating hot water supply and return piping with fiberglass insulation covered with aluminum jacketing and aluminum fitting covers.

B. Insulate higher level exposed heating hot water supply and return piping with fiberglass insulation with polyurethane coated ASJ jacketing and heavy gauge pre-molded fitting covers.

C. Insulate concealed heating hot water supply and return piping with fiberglass insulation covered with ASJ jacketing and heavy gauge pre-molded fitting covers.

D. Minimum Insulation Thickness:
   1. Piping 3/4 inch and smaller: 1-1/2 inch
   2. Piping 1 inch thru 1-1/4 inch: 1-1/2 inch
   3. Piping 1-1/2 inch thru 3-1/2 inch: 2 inch
   4. Piping 4 inch thru 6 inch: 2 inch
   5. Piping 8 inch and larger: 2 inch

2.3 HEATING WATER PIPING 201°F THRU 250°F (INDOORS)

A. Insulate lower level exposed heating hot water supply and return piping with fiberglass insulation covered with aluminum jacketing and aluminum fitting covers.

B. Insulate higher level exposed heating hot water supply and return piping with fiberglass insulation with polyurethane coated ASJ jacketing and heavy gauge pre-molded fitting covers.

C. Insulate concealed heating hot water supply and return piping with fiberglass insulation covered with ASJ jacketing and heavy gauge pre-molded fitting covers.

D. Minimum Insulation Thickness:
   1. Piping 3/4 inch and smaller: 2 inch
   2. Piping 1 inch thru 1-1/4 inch: 2 inch
   3. Piping 1-1/2 inch thru 3-1/2 inch: 2 inch
   4. Piping 4 inch thru 6 inch: 2-1/2 inch
   5. Piping 8 inch and larger: 2-1/2 inch

2.4 CHILLED WATER PIPING (INDOORS)

A. Insulate lower level exposed chilled water supply and return piping with fiberglass insulation covered with aluminum jacketing and aluminum fitting covers.

B. Insulate higher level exposed chilled water supply and return piping with fiberglass insulation with polyurethane coated ASJ jacketing and heavy gauge pre-molded fitting covers.

C. Insulate concealed chilled water supply and return piping with closed cell polyisocyanurate insulation with vapor retarder film.

D. Minimum Insulation Thickness:
   1. Piping 1-1/4 inch and smaller: 1/2 inch
   2. Piping 1-1/2 inch and larger: 1 inch

2.5 CHILLED WATER PIPING (OUTDOORS)

A. Insulate chilled water supply and return piping installed outdoors with closed cell polyisocyanurate insulation with vapor retarder film, covered with aluminum jacketing and aluminum fitting covers.

B. Minimum Insulation Thickness:
   1. Piping 1-1/4 inches and smaller: 1 inch
   2. Piping 1-1/2 inches and larger: 1 inch

2.6 CONDENSER WATER PIPING (INDOORS)

A. Insulate condenser water supply and return piping installed indoors with closed cell polyisocyanurate insulation with vapor retarder film, covered with aluminum jacketing and aluminum fitting covers.

B. Minimum Insulation Thickness:
   1. Piping 1-1/4 inch and smaller: 1/2 inch
   2. Piping 1-1/2 inch and larger: 1 inch

2.7 CONDENSER WATER PIPING (OUTDOORS)

A. Insulate condenser water supply and return piping installed outdoors with closed cell polyisocyanurate insulation with vapor retarder film, covered with aluminum jacketing and aluminum fitting covers.

B. Minimum Insulation Thickness:
   1. Piping 1-1/4 inches and smaller: 1 inch
   2. Piping 1-1/2 inches and larger: 1 inch

2.8 HEAT PUMP LOOP PIPING (INDOORS)

A. Insulate lower level exposed heat pump loop supply and return piping with fiberglass insulation covered with aluminum jacketing and aluminum fitting covers.

B. Insulate higher level exposed heat pump loop supply and return piping with fiberglass insulation with polyurethane coated ASJ jacketing and heavy gauge pre-molded fitting covers.

C. Insulate concealed heat pump loop supply and return piping with fiberglass insulation covered with ASJ jacketing and heavy gauge pre-molded fitting covers

D. Minimum Insulation Thickness:
   1. Piping 1-1/4 inch and smaller: 1/2 inch
   2. Piping 1-1/2 inch and larger: 1 inch

2.9 COLD WATER MAKE-UP PIPING (OUTDOORS)

A. Insulate cold water make-up piping installed outdoors with closed cell polyisocyanurate insulation with vapor retarder film, covered with aluminum jacketing and aluminum fitting covers.

B. Minimum Insulation Thickness:
   1. Piping 1-1/4 inches and smaller: 1 inch
   2. Piping 1-1/2 inches and larger: 1 inch

2.10 CONDENSATE DRAIN PIPING (INDOORS)

A. Insulate condensate drain piping installed inside the building with fiberglass Insulation. Insulation is not required on condensate overflow drain piping.
   1. Minimum Insulation Thickness for all pipe sizes: 1/2 inch

2.11 HIGH TEMPERATURE HOT WATER PIPING ABOVE 250°F (INDOORS)

A. Insulate lower level exposed heating hot water supply and return piping with fiberglass insulation covered with aluminum jacketing and aluminum fitting covers.

B. Insulate higher level exposed heating hot water supply and return piping with fiberglass insulation with polyurethane coated ASJ jacketing and heavy gauge pre-molded fitting covers.

C. Insulate concealed heating hot water supply and return piping with fiberglass insulation covered with ASJ jacketing and heavy gauge pre-molded fitting covers

D. Minimum Insulation Thickness:
   1. Piping 3/4 inch and smaller: 2-1/2 inch
   2. Piping 1 inch thru 1-1/4 inch: 3-1/2 inch
   3. Piping 1-1/2 inch thru 3-1/2 inch: 4 inch
   4. Piping 4 inch thru 6 inch: 4 inch
   5. Piping 8 inch and larger: 4 inch

E. Insulation on HTHW piping 3" and larger shall be installed in two layers, with staggered joints.

2.12 STEAM PIPING 15 PSI THRU 125 PSI (INDOORS)

A. Insulate lower level exposed steam piping with fiberglass insulation covered with aluminum jacketing and aluminum fitting covers.

B. Insulate higher level exposed steam piping with fiberglass insulation with polyurethane coated ASJ jacketing and heavy gauge pre-molded fitting covers.

C. Insulate concealed steam piping with fiberglass insulation covered with ASJ jacketing and heavy gauge pre-molded fitting covers.

D. Minimum Insulation Thickness:
   1. Piping 3/4 inch and smaller: 2-1/2 inch
   2. Piping 1 inch thru 1-1/4 inch: 3-1/2 inch
   3. Piping 1-1/2 inch thru 3-1/2 inch: 4 inch
   4. Piping 4 inch thru 6 inch: 4 inch
   5. Piping 8 inch and larger: 4 inch

E. Insulation on steam piping 3" and larger shall be installed in two layers, with staggered joints.

2.13 STEAM CONDENSATE AND FEED WATER PIPING (INDOORS)

A. Insulate lower level exposed steam condensate and feed water piping with fiberglass insulation covered with aluminum jacketing and aluminum fitting covers.

B. Insulate higher level exposed steam condensate and feed water piping with fiberglass insulation with polyurethane coated ASJ jacketing and heavy gauge pre-molded fitting covers.

C. Insulate concealed steam condensate and feed water piping with fiberglass insulation covered with ASJ jacketing and heavy gauge pre-molded fitting covers.

D. Minimum Insulation Thickness:
   1. Piping 1-1/4 inch and smaller: 2 inch
   2. Piping 1-1/2 inch thru 3-1/2 inch: 2 inch
   3. Piping 4 inch thru 6 inch: 2-1/2 inch
   4. Piping 8 inch and larger: 2-1/2 inch

2.14 PLASTIC PIPING OR OTHER NON-25/50 RATED PIPING (INDOORS)

A. Insulate any plastic piping installed inside an occupied space or in a return air plenum with a minimum 1" thickness of Johns Manville Microlok HP fiberglass insulation as required to comply with ASTM E84. Plastic pipe materials shall only be utilized where specifically identified on the drawings.

2.15 REFRIGERANT PIPING INSULATION (INDOORS)

A. Insulate refrigerant suction piping installed indoors with 3/4 inch thick AP Armaflex closed cell foam pipe insulation. Flame spread and smoke developed rating shall be 25/50 or less in accordance with ASTM E84. Fittings and valves shall be covered with segmented sections of the pipe insulation installed in accordance with the insulation manufacturer's instructions. All joints between sections of insulation shall be sealed with Armaflex No. 520 adhesive.

B. Insulate both liquid and suction lines on mini-split system heat pumps and variable refrigerant systems that incorporate heat recovery using the aforementioned insulating materials.

2.16 REFRIGERANT PIPING INSULATION (OUTDOORS)

A. Insulate refrigerant piping installed outdoors with 1 inch thick Johns Manville Trymer 25-50 with vapor retarder film, covered with aluminum jacketing and aluminum fitting covers secured with 3/4" wide stainless steel bands at 12" on center. Trymer 25-50 closed cell polyisocyanurate insulation is required on outdoor refrigerant piping because it does not expand and contract during weather extremes like Armaflex closed cell foam pipe insulation.

B. Insulate both liquid and suction lines on mini-split system heat pumps and variable refrigerant systems that incorporate heat recovery using the aforementioned insulating materials.

2.17 DUCTWORK INSULATION MATERIALS

A. General: All duct insulation R-Values and thicknesses shall meet or exceed the requirements listed in International Energy Conservation Code Section C403.11.1.

B. See Specification Section 233100 (HVAC Ductwork) for additional related requirements.

C. Ductwork Insulation
   1. All concealed supply air ductwork (rectangular and round) shall be externally insulated unless indicated otherwise on the drawings.
   2. Return air ductwork (rectangular and round) that is located in a return air plenum is not required to be insulated unless indicated otherwise on the drawings or in Specification Section 233100 (HVAC Ductwork).

D. Ductwork Liner Insulation (See Specification Section 233100 (HVAC Ductwork).

E. External Duct Wrap Insulation
   1. Unless indicated otherwise, wrap all concealed supply air and return air ductwork with 2-1/5 inch thick, 0.75 pcf density, fiberglass duct insulation with reinforced foil facing (Johns Manville Microlite FSK Type 75, or equal, with an R-value equal to 6.0).
   2. Unless indicated otherwise, wrap all concealed outside air ductwork with 2-1/5 inch thick, 0.75 pcf density, fiberglass duct insulation with reinforced foil facing (Johns Manville Microlite FSK Type 75, or equal, with an R-value equal to 6.0).

3. In addition to the insulation manufacturer's tape flap, all insulation seams shall be sealed with pressure-sensitive tape (Shurtape AF-984CT, or equal). Longitudinal seams shall have a 4 inch overlap of the foil facing secured with outward clinching staples and pressure sensitive tape.
4. In addition to the specified seam sealing procedure, secure insulation with 16 gauge galvanized wire tied on 16" centers and within 8 inches of insulation seams.
5. Secure insulation on the underside of ducts that are wider than 24 inches with either weld-pins or with Duro-Dyne PBH Dynastick Fasteners adhered with Duro-Dyne PBACZVOC Dynastick Adhesive. Weld pins or fasteners shall be placed on 18" centers and within 6 inches of insulation seams. Any penetrations from pins in the insulation shall be sealed with pressure-sensitive tape. Galvanized wire ties are not required on the rectangular duct sections where the insulation is secured with pins and washers as outlined in this paragraph.

F. Clothes Dryer Exhaust Insulation: Insulate laundry dryer exhaust ducts throughout the building interior. Insulation shall be 3M Fire Barrier Duct Wrap 615+, Thermal Ceramics FireMaster FastWrap XL, or approved equal. Insulation shall be applied in strict accordance with the UL listing and the manufacturer's written installation instructions, including the required overlap, filament tape, and metal banding.

G. Kitchen Grease Hood Duct Insulation: Ductwork shall be insulated with two layers of flexible high temperature insulation rated to 2192°F, fully encapsulated in FSP facing. The duct enclosure system shall be UL listed per ASTM E2336 and ISO 6944 for 1 and 2 hour ratings as applicable, and zero clearance to combustibles, and tested per ASTM E84 for a flame/smoke rating less than 25/50. Insulation shall have a nominal thickness of 1-1/2 inches and a density of 6 lbs/ft3. Insulation R-Value shall be equal to 7.3 at 75°F. Insulation shall be applied in strict accordance with the UL listing and the manufacturer's written installation instructions, including the required overlap, filament tape, and metal banding. Insulation shall be 3M Fire Barrier Duct Wrap 615+, Thermal Ceramics FireMaster FastWrap XL, or approved equal. The duct wrap manufacturer's fire rated door shall be used for duct access where shown or specified, and/or as required by code. Installer(s) of this specialty insulation product shall be factory trained or certified.

H. Kitchen Non-Grease Hood Duct Insulation: Ductwork above ceilings shall be insulated with 2-1/5 inch thick, .75 lb fiberglass insulation (Johns Manville Microlite FSK Type 75, or approved equal, with an R-value equal to 6.0). Insulation shall be applied with a non-flammable adhesive and secured with galvanized wire on 16" centers and within 8 inches of insulation seams.

I. Fume Hood Duct Insulation at Fire Rated Penetrations: Provide fire rated insulation on all fume hood exhaust ductwork at a fire rated separation (10 feet of insulation on each side of the rated separation as required by 2019 NFPA 45 Section 7.5.10.2). Insulation shall include 2 layers of flexible high temperature insulation rated to 2192°F, fully encapsulated in FSP facing. The duct enclosure system shall be UL listed per ASTM E2336 and ISO 6944 for 1 and 2 hour ratings as applicable, zero clearance to combustibles, and tested per ASTM E84 for a flame/smoke rating less than 25/50. Insulation shall have a nominal thickness of 1-1/2 inches and a density of 6 lbs/ft3. Insulation R-Value shall be equal to 7.3 at 75°F. Insulation shall be applied in accordance with the UL listing and the manufacturer's written installation instructions, including the required overlap, filament tape, and metal banding. The duct wrap manufacturer's fire rated door shall be used for duct access where shown, specified, and/or as required by code. Insulation shall be 3M Fire Barrier Duct Wrap 615+, Thermal Ceramics FireMaster FastWrap XL, or approved equal.

J. Sound Attenuating Duct Wrap

1. Where indicated on the drawings acoustical insulation shall be applied to the supply and return air vertical drops at each air handling unit plus the next 20 feet of horizontal supply and return air duct (as measured to/from the centerline dimension of the associated duct elbows). In any case where the first 20 feet of horizontal ductwork includes branches in two or more directions each of those branches shall also be sound insulated to the specified 20 feet distance.
2. Acoustical duct wrap shall consist of a 2.0 lb sound barrier (Industrial Noise Control Products Sound Seal B-20 or GLT Vinaflex VN-200) installed over 2-1/5" thick, 0.75 pcf density, fiberglass duct insulation with reinforced foil facing (Johns Manville Microlite FSK Type 75, or approved equal, with an R-value equal to 6.0). Sound insulation shall be installed in accordance with the manufacturer's written instructions and in accordance with these specifications. Duct liner is not required on ducts that receive sound attenuating duct wrap.
3. All sound insulation seams shall be sealed with pressure-sensitive tape (Shurtape AF-984CT, or approved equal). Longitudinal seams shall have a 4 inch overlap of the sound barrier secured with outward clinching staples and pressure-sensitive tape. In addition to the specified sealing procedure secure insulation with 16 gauge galvanized wire tied on 16" centers and within 8 inches of insulation seams.
4. Secure insulation on the underside of ducts that are wider than 24 inches with Duro-Dyne PBH Dynastick Fasteners adhered with Duro-Dyne PBACZVOC Dynastick Adhesive placed on 18" centers and within 6 inches of insulation seams.
5. Galvanized wire ties are also required on the rectangular ducts that are wider than 24 inches where the insulation is secured with pins and washers as outlined in the preceding paragraph.

2.18 EQUIPMENT INSULATION MATERIALS

A. General: All equipment insulation R-Values and thicknesses shall meet or exceed the requirements listed in International Energy Conservation Code Section C403.11.3.

B. Chilled Water Equipment
   1. Insulate all chilled water equipment operating at reduced surface temperatures and which does not have factory-applied insulation, including chilled water pump bodies and air separators. Do not insulate chilled water expansion tanks.
   2. Flat insulation shall be 3 lb density fiberglass board with thickness as required for the operating temperature of the associated fluid inside the equipment. Insulation shall be Johns Manville Series 800 Spin-Glas with reinforced FSK jacket, Owens Corning Series 700 fiberglass board insulation with reinforced FSK jacket, or approved equal.
   3. Curved insulation shall be 2.5 lb density semi-rigid fiberglass with thickness as required for the operating temperature of the associated fluid inside the equipment. Insulation shall be Johns Manville Micro-Flex large diameter pipe and tank insulation with reinforced FSK jacket, Owens Corning large diameter pipe and tank insulation with reinforced FSK jacket, or approved equal.
   4. Available Manufacturers: Subject to compliance with requirements, manufacturers offering products which may be incorporated in the work include the following:
      a. Johns Manville
      b. Owens Corning

C. Heating Water Equipment

1. Insulate all heating water equipment operating at increased surface temperatures and which does not have factory-applied insulation, including heating water system air separators. Do not insulate heating water expansion tanks or heating water pumps.
2. Flat insulation shall be 3 lb density fiberglass board with thickness as required for the operating temperature of the associated fluid inside the equipment. Insulation shall be Johns Manville Series 800 Spin-Glas with reinforced FSK jacket, Owens Corning Series 700 fiberglass board insulation with reinforced FSK jacket, or approved equal.
3. Curved insulation shall be 2.5 lb density semi-rigid fiberglass with thickness as required for the operating temperature of the associated fluid inside the equipment. Insulation shall be Johns Manville Micro-Flex large diameter pipe and tank insulation with reinforced FSK jacket, Owens Corning large diameter pipe and tank insulation with reinforced FSK jacket, or approved equal.
4. Available Manufacturers: Subject to compliance with requirements, manufacturers offering products which may be incorporated in the work include the following:
   a. Johns Manville
   b. Owens Corning

D. Heat Pump Loop Equipment
1. Insulate all heat pump loop equipment which does not have factory-applied insulation, including heat pump loop pump bodies and air separators. Do not insulate heat pump loop expansion tanks.
2. Flat insulation shall be 3 lb density fiberglass board with thickness as required for the operating temperature of the associated fluid inside the equipment. Insulation shall be Johns Manville Series 800 Spin-Glas with reinforced FSK jacket, Owens Corning Series 700 fiberglass board insulation with reinforced FSK jacket, or approved equal.
3. Curved insulation shall be 2.5 lb density semi-rigid fiberglass. with thickness as required for the operating temperature of the associated fluid inside the equipment. Insulation shall be Johns Manville Micro-Flex large diameter pipe and tank insulation with reinforced FSK jacket, Owens Corning large diameter pipe and tank insulation with reinforced FSK jacket, or approved equal.
4. Available Manufacturers: Subject to compliance with requirements, manufacturers offering products which may be incorporated in the work include the following:
   a. Johns Manville
   b. Owens Corning

E. Removable Insulating Jackets
1. Removable insulating jackets shall be provided for the following items.
   a. Chilled water, condenser water, and heat pump loop pumps.
   b. Motorized control valves located indoors and/or outdoors.
   c. Flanged valves located indoors and/or outdoors.
2. Insulation and jacket material shall be rated for the operating temperature of the equipment and/or fluid being insulated. Insulating jackets shall be removable and reusable, thermal and acoustical insulating jackets, constructed of minimum 18 ounce material, and sewn with Kevlar thread.
3. Jackets for applications above 250°F (e.g., high temperature hot water and steam valves in exterior valve vaults) shall be fabricated with either silicone or PTFE-coated fiberglass fabric inner and outer material, and minimum 4” thick needled fiberglass insulation (see pipe

insulation section for required thickness based on pipe size and temperature). The inner layer shall include a stainless steel mesh liner.

4. Jackets for hot water applications 250°F and below (e.g., hot water valves in exterior valve vaults) shall be fabricated with PTFE-coated fiberglass fabric inner and outer material and minimum 2" thick needled fiberglass insulation (see pipe insulation section for required thickness based on pipe size and temperature).
5. Jackets for cold/chilled water applications shall be fabricated with PTFE-coated fiberglass fabric inner and outer material and 1" thick needled fiberglass insulation.
6. Insulating jackets shall be secured with stainless steel d-rings with straps and Velcro fasteners.
7. Available Manufacturers: Subject to compliance with requirements, manufacturers offering products which may be incorporated in the work include the following:
   a. Insultech
   b. MIT International
   c. Thermal Energy Products

F. Ice Machines: Insulate all ice machine drain piping which does not have factory-applied insulation with fiberglass Insulation. Insulation is not required on ice machine overflow drain piping. Minimum Insulation Thickness for all pipe sizes: 1/2 inch.

G. Manholes and Handholes: Manholes and handholes shall be made accessible by beveling the insulation around the manhole, and covering the manhole with a removable insulating fiberglass blanket, same thickness as the adjacent equipment insulation. Manhole and handhole covers shall be finished the same as the tank covering.

H. Roof-Mounted Heating & Cooling Equipment Curbs: On projects where existing roof-mounted air handling units are being replaced the Contractor shall install insulation on the interior perimeter of equipment curbs if the existing curbs are not already insulated. Insulation shall be 3 inch thick, 3 lb density fiberglass board, Johns Manville Series 800 Spin-Glas with all-purpose white ASJ jacket, or approved equal. Conductivity shall be .23 Btu-in/(hr-ft2-°F) at 75°F, with a flame spread and smoke developed rating of 25/50 or less per ASTM E84.

I. Emergency Generator Exhaust:
   1. Insulate emergency generator muffler and exhaust with two layers of 1-1/2" thick FireMaster FastWrap XL, 3M Fire Barrier Duct Wrap 615+, or approved equal. Install insulation layers with staggered joints/seams. An acceptable alternative to the aforementioned fire-rated insulation products is to utilize 2" thick calcium silicate (Johns Manville Thermo-1200) covered with 2" thick mineral wool (Johns Manville MinWool-1200, or approved equal).
   2. The specified insulation shall be covered with .024" thick stucco-embossed aluminum jacketing and aluminum fitting covers secured with 3/4" wide stainless steel bands at 12" on center.
   3. The specified insulation and aluminum jacketing shall extend through the roof penetration and terminate 12 inches above the finished roof.

PART 3 - EXECUTION

3.1 INSTALLATION OF PIPING INSULATION

A. The term 'piping' used herein shall include pipe, valves, strainers, and fittings. Apply insulating cements to fittings, valves, and strainers, and trowel smooth to the thickness of adjacent covering. Covering on valves shall extend up to the bonnet. The covering cement shall be of the types specified herein.

B. Install all insulation products in accordance with the manufacturer's written instructions and in accordance with recognized industry practices.

C. Install insulation on pipe systems subsequent to installation of heat tracing, testing, and acceptance of tests.

D. Install insulation materials with smooth and even surfaces. Insulate each continuous run of piping with full length units of insulation, with single-cut pieces to complete each run. Do not use cut pieces or scraps abutting each other.

E. Clean and dry pipe surfaces prior to insulating. Butt insulation joints firmly together to ensure complete and tight fit over surfaces to be covered.

F. Extend piping insulation without interruption through walls, floors, and similar penetrations, except piping through fire walls.

G. Install pipe hangers on the outside of the insulation and not in contact with the pipe. Protect insulation as specified in Specification Section 230500 (Basic Materials and Methods for HVAC) under 'Hangers and Supports for Ductwork and Piping'.

H. Install a 6 inch long section of rigid insulation at each pipe saddle and/or hanger. Rigid sections shall be calcium silicate, except on chilled water piping where rigid sections shall be foamglas.

I. Seal all raw ends of insulation with Childers CP-10 weather barrier sealant, or approved equal.

3.2 INSTALLATION OF DUCTWORK INSULATION

A. Install insulation products in accordance with the manufacturer's written instructions and in accordance with these specifications.

B. Extend ductwork insulation without interruption through walls, floors, and similar penetrations, except ductwork through fire rated walls and where otherwise indicated.

C. Except where otherwise indicated, external duct insulation may be omitted on ductwork where internal duct liner insulation has been specified.

D. Except where otherwise indicated, ductwork exposed in conditioned spaces is not required to be insulated.

3.3 INSTALLATION OF EQUIPMENT INSULATION

A. Install all equipment insulation materials with smooth and even surfaces and on clean and dry surfaces. Replace any poorly fitted joints. Do not use mastic or joint sealer as filler for gapping joints and excessive voids resulting from poor workmanship.

B. Do not apply insulation to equipment, flues, breechings, or stacks while hot.

C. Do not insulate cleanouts, ASME stamps, or equipment manufacturer's nameplates. Provide neatly beveled edges at interruptions of insulation.

3.4 CARE AND CLEANING

A. Repair or replace broken, damaged, or otherwise defective insulation. Leave entire work in condition satisfactory to the Architect/Engineer. At completion, carefully clean equipment installed as part of this work. Leave systems and equipment in a satisfactory operating condition.

3.5 CLEANING UP

A. Upon completion of the Work remove materials, equipment, apparatus, tools, and the like, and leave the premises clean, neat, and orderly.

END OF SECTION

SECTION 230800 - TESTING, ADJUSTING, AND BALANCING OF HVAC SYSTEMS

PART 1 - GENERAL

1.1 CONDITIONS OF THE CONTRACT

A. Sections 230000 (Heating, Ventilating, and Air Conditioning) and 230500 (Basic Materials and Methods for HVAC) are hereby made a part of this section.

B. Section 230910 (Sequence of Operation) is hereby made a part of this section.

1.2 WORK INCLUDED

A. Temperature performance testing on all heat transfer equipment and/or components.

B. Test and balance of air distribution systems and associated equipment and apparatus.

C. Test and balance of hydronic distribution systems and associated equipment and apparatus.

D. Testing, setting, and adjusting speed and volume of systems, recording data, conducting tests, preparing and submitting reports, and recommending modifications to work as required by the contract documents.

E. Component types of testing, adjusting, and balancing specified in this section includes the following as applied to mechanical equipment:
   1. Central Plant Equipment (Boilers, Chillers, Cooling Towers, Pumps, etc.)
   2. Steam Plant Equipment (PRV Stations, Deaerator Pumps, Condensate Pumps, etc.)
   3. Pumps
   4. Piping Systems
   5. Air Handling Units
   6. Fans
   7. Make-Up Air Units
   8. Fan Coil Units
   9. Heat Pumps (Air and Water)
   10. Energy Recovery Ventilators
   11. Ductwork Systems
   12. Terminal Units
   13. Air Distribution
   14. Balancing Valves for HVAC Systems
   15. Balancing Valves for Plumbing Systems

1.3 QUALITY ASSURANCE

A. Balance Agency: Provide services and facilities of an independent agency that specializes in testing, analysis, and balancing of hydronic systems and air distribution for heating- cooling systems. Work shall be done by qualified engineering technicians and trained personnel, using instruments certified accurate to limits used in standard practice for testing and balancing of hydronic and air distribution for heating-cooling systems. The balance agency shall field test air and hydronic flows in accordance with the methods prescribed by the Associated Air Balance Council, National Standard Volume 1, latest edition.

B. The balance agency shall be a member of the Associated Air Balance Council. Subject to compliance with requirements, the balance agency shall be one of the following (no exceptions):

1. RS Analysis
2. Raglen System Balance

C. The balance agency shall submit the results of tests in this section to the Architect/Engineer for review and acceptance.

D. AABC Compliance: Comply with AABC 'National Standards' Volume 1, as applicable to mechanical air and hydronic distribution systems and associated equipment and apparatus.

E. Industry Standards: Comply with ASHRAE recommendations pertaining to measurements, instruments, and testing, adjusting and balancing, except as otherwise indicated.

F. Reference Standards:
1. AABC (Associated Air Balance Council) AABC National Standards Volume 1.
2. ASHRAE (American Society of Heating, Refrigerating, and Air Conditioning Engineers).

G. Test Instruments: Utilize test instruments and equipment for the test and balance work required, of type, precision, and capacity as recommended in AABC National Standards Volume 1.

1.4 SUBMITTALS

A. Refer to Section 013300 - Submittal Requirements for submittal procedures.

B. Provide a test and balance agenda that includes step-by-step testing and balancing procedures, test sheets, and schematic drawings, all being specific to the project.

C. Provide submittals to indicate the extent of work proposed. Submit certified test reports as hereinafter specified signed by test and balance technician/supervisor that performed test and balance work.

D. Include identification and types of instruments used and their most recent calibration date with submission of final test report.

E. The completed balance report shall be submitted for review and approval prior to requesting final observation of the project.

1.5 GENERAL REQUIREMENTS

A. The balance agency shall perform the following during the installation phase of systems:
1. Study the design drawings and specifications and prepare a schedule to physically inspect mechanical equipment for the hydronic and air distribution systems to be tested and balanced. The Contractor shall provide the balance agency with one copy of the contract drawings and specifications, mechanical equipment submittals, and change orders necessary for proper balancing of the hydronic and air distribution systems.
2. The balance agency shall make field inspections prior to closing in portions of systems to be balanced. The balance agency shall verify that all work, fittings, dampers, balancing devices, etc. are properly fabricated and installed as shown or specified and that the balance agency will be able to properly balance the systems.
3. Prepare a testing and balancing schedule, test record forms, and necessary technical information regarding hydronic and air distribution systems for the installed heating and cooling equipment.

4. Provide written documentation when the above noted items have been completed, (see example checklist provided at the end of this section). A single page letter signed off by the mechanical contractor and the test and balance agency will suffice.
5. Recommend adjustments and/or corrections to mechanical equipment and hydronic and air distribution systems that are necessary for proper balancing of systems. Provide written documentation of the recommended items to the Architect/Engineer for review.

B. Patching Materials: Except as otherwise indicated, use same products as used by original installer for patching holes in insulation, ductwork, and housings which have been cut or drilled for test purposes, including access for test instruments, attaching jigs, and similar purposes. At tester's option, plastic plugs with retainers may be used to patch drilled holes in low pressure ductwork and housings (2" w.g. and below).

PART 2 – PRODUCTS (NOT USED)

PART 3 - EXECUTION

3.1 TESTING AND BALANCING

A. Upon completion of hydronic and air handling systems, the test and balance agency shall complete tests, analysis, and balance of hydronic and air handling systems for all heating and cooling equipment.

B. This report shall include as minimum, but not be limited to (following design and actual information):
1. Motors, Pumps, and Fans: Horsepower, brake horsepower, revolutions per minute, actual amperage, and full load rated amperage.
2. Air Handling Unit Cooling and Heating Section Performance.
3. Air Handling Unit Heat Exchanger Performance (when applicable).
4. Rooftop Unit Cooling and Heating Section Performance.
5. Supply, Return, and Exhaust Fans: CFM, static pressure, and outlet velocity.
6. Pumps: Suction, discharge, and shutoff pressures.
7. Self-Sensing Pumps: Data as required for proper system operation, including balancing to the project specific self-sensing pump curves.
8. Heat Pumps: GPM flow and fluid temperatures, air temperatures at inlet and outlet.
9. Energy Recovery Ventilator Performance (all fan, temperature, and cfm data).
10. Terminal Units: CFM, reheat coil pressure drop and air temperatures at inlet and outlet.
11. Inlets, Outlets, and Main Branch Ducts: CFM and air velocity.
12. All Rooms: Air temperature during testing.
13. Other information required to establish completely balanced systems.

3.2 DUCT LEAKAGE TESTING

A. All duct system pressure testing shall be witnessed and documented by the test and balance contractor. See Specification Section 233100-3.2 (Duct Leakage Testing).

B. All duct system joints/connections shall be reviewed by the test and balance subcontractor for compliance with the duct sealing requirements listed in Specification Section 233100-3.1 (Installation of Ductwork) prior to commencement of any duct leakage testing.

3.3 BALANCING REQUIREMENTS

A. All air and water systems and devices shall be balanced to within +0% to +5% of design.

B. Make allowance for air filter resistance at time of tests (by false-loading the filter bank with cardboard or other suitable material such that the test results can be repeated). Test and balance all main supply and return air ducts to the design air quantities.

C. After final air and hydronic testing and balancing make necessary adjustments to obtain uniform temperatures as required during actual occupancy.

D. Take static pressure and air velocity readings with instruments that have been recently calibrated. Take final velocity readings with an Alnor velometer, Anemostat air meter, or vane type anemometer, all recently calibrated prior to testing. Include certified correction curves for each calibration as part of the record. Certify instruments are accurate to standards currently used in common practice for system balance work. Use test cones for diffusers.

E. Run tests with supply, return, and exhaust systems operating and doors, windows, etc. closed or under normal traffic. Conduct final testing with cooling coils under load to ensure that static pressures are or near design conditions.

F. Adjust deflection of supply outlets to ensure proper and uniform air distribution.

G. Work with the temperature control subcontractor in adjustment of automatic dampers, valves, thermostats, etc. as required to maintain proper temperatures in all portions of the building.

H. The Contractor responsible for installing heating, cooling, and ventilating equipment shall make any changes, additions, or modifications to dampers, fan drives, motor sheaves, pump impellers, motors, and other equipment as necessary for proper air and hydronic balance.

I. Balance of systems shall be reviewed by the Architect/Engineer. During this review the mechanical contractor shall furnish workmen, materials, ladders, etc. to enable the Architect/Engineer to witness all readings as may be directed. If any errors are found, the Testing and Balancing Agency shall readjust the system to the satisfaction of the Architect/Engineer.

J. A kitchen hood performance test per 2018 Uniform Mechanical Code Section 511.2.2.1 shall be conducted upon completion and before final approval of the installation of a ventilation system serving commercial cooking appliances. The test shall verify the rate of exhaust airflow in accordance with UMC Sections 508.5.1.2 through 508.5.1.5. The permit holder shall furnish the necessary test equipment and devices required to perform the tests (see ASHRAE Standard 154 Section 4.7.1). The permit holder shall verify the capture performance of Type I and Type II hoods. A field test shall be conducted with all appliances under the hoods operating at design capacity, and with all sources of replacement air operating at design airflows for a restaurant. Capture and containment shall be verified visually by observing smoke or steam produced by actual cooking operation or by simulating cooking using devices such as smoke candles or smoke puffers. Smoke bombs shall not be used (see ASHRAE Standard 154 Section 4.7.2).

K. See the Field Observation Checklist Example on the following page.

END OF SECTION

SECTION 231600 - FACILITY NATURAL GAS SYSTEMS

PART 1 - GENERAL

1.1 CONDITIONS OF THE CONTRACT

A. Sections 230000 (Heating, Ventilating, and Air Conditioning) and 230500 (Basic Materials and Methods for HVAC) are hereby made a part of this section.

1.2 WORK INCLUDED

A. Types of piping systems and specialties specified in this section include the following:
   1. Steel Gas Pipe
   2. Polyethylene Gas Pipe
   3. Miscellaneous Piping Materials/Products
   4. Gas Pressure Regulating Valves
   5. Flexible Connections
   6. Emergency Fuel Shutoff Valves
   7. Hangers and Supports

1.3 QUALITY ASSURANCE

A. Welders' Qualifications:
   1. Welding: Qualify welding procedures, welders and operators in accordance with ASME B31.1, or ASME B31.9, as applicable, for shop and project site welding of piping work.

B. Heat fusion qualifications:
   1. Heat Fusion Joining: Qualify procedures and operators in accordance with the requirements of Title 49 of the Code of Federal Regulations as it applies to heat fusion.

C. Manufacturers: Firms regularly engaged in manufacture of supports and anchors of types and sizes required, whose products have been in satisfactory use in similar service for not less than five years.
   1. Plumbing Code Compliance: Comply with applicable portions of the Uniform Plumbing Code pertaining to selection and installation of plumbing materials and products.
   2. ANSI Compliance: Fabricate and install natural gas piping in accordance with ANSI B31.2 (Fuel Gas Piping).
   3. NFPA Compliance: Fabricate and install natural gas systems in accordance with NFPA (National Fuel Gas Code).
   4. Utility Compliance: Fabricate and install natural gas systems in accordance with local gas utility company requirements.
   5. Comply with applicable codes pertaining to product materials and installation of supports and anchors.
   6. UL and FM Compliance: Provide products which are Underwriters Laboratories listed and Factory Mutual approved.

1.4 SUBMITTALS

A. Refer to Section 013300 - Submittal Requirements for submittal procedures.

B. Product Data: Submit catalog cuts, specifications, installation instructions, and dimensioned drawings for each type of pipe, support, anchor, and seal listed in this section.

C. Welding Certifications: Submit certifications and reports for welded piping work.

PART 2 - PRODUCTS

2.1 GENERAL

A. Provide pipe and tube, joint type, grade, size, and weight indicated for each service, and complying with governing regulations and industry standards.

2.2 BELOW GRADE POLYETHYLENE GAS PIPE

A. Polyethylene Pipe, PE2406. Pipe and fittings shall meet the requirements of ASTM D2513.

B. Fittings and accessories shall be as manufactured and furnished by the pipe supplier. Fittings shall meet the requirements of ASTM D2513, as mandated by CFR 49 Part 192.59 and is so marked, according to Part 192.63.

2.3 WELDING MATERIALS

A. Except as otherwise indicated, provide welding materials as determined by the Contractor as required to comply with all installation requirements and to comply with Section II, Part C of the ASME Boiler and Pressure Vessel Code.

2.4 PIPE AND PIPE FITTINGS

A. Gas Piping (Outside the Building)
   1. All Pipe Sizes: Polyethylene Pipe, PE2406.

B. Gas Piping (Below Grade)
   1. All Pipe Sizes: Polyethylene Pipe, PE2406.

C. Gas Piping (Building Distribution)
   1. Pipe sizes 2 inches and smaller shall be Schedule 40 black steel pipe with malleable iron threaded fittings.
   2. Pipe sizes 2-1/2 inches and larger shall be Schedule 40 black steel pipe with wrought steel butt and/or socket weld fittings.
   3. Gas piping of all sizes routed inside a building at a pressure that exceeds 1 psi (28“ w.g.) shall be Schedule 40 black steel pipe with wrought steel butt and/or socket weld fittings.

D. Gas Piping (Below a Concrete Floor Slab)
   1. Install gas piping that is located below a concrete floor slab in accordance with UPC Section 1210.1.6. Gas piping that is located below a concrete floor slab shall be flexible stainless steel with a polyethylene sleeve, Omega TracPipe P-II, or approved equal. Fittings connected to the Omega TracPipe P-II flexible gas piping shall be by the same manufacturer as the pipe. Pipe and fittings shall be installed in conformance with the manufacturer’s written instructions. The gas piping sleeve shall be vented to the outdoors in compliance with UPC Section 1210.1.6.1.

2.5 PIPING SPECIALTIES

A. Comply with Section 220500 (Basic Materials and Methods for Plumbing)
   1. Pipe Escutcheons
   2. Pipe Sleeves

3. Sleeve Seals
4. Unions and Flanges

2.6 BASIC GAS VALVES

A. Gas Valves: Valves 4 inch and smaller shall be Nibco T-FP-600A-LF, Apollo 94ALF-A, or approved equal. Valves 5 inch and larger shall be worm gear operated, Nordstrom Figure149, Resun Figure R013410-WGA, or approved equal. Gas valves shall be CSA/AGA and ASME listed.

B. Appliance Gas Valves: Provide a gas valve at each connection to an appliance. Appliance gas valves shall be Nibco GB1A, Milwaukee BB2 Series, or approved equal. Gas valves shall be CSA/AGA and ASME listed.

2.7 GAS PRESSURE REGULATING VALVES

A. Provide single stage, steel jacketed, corrosion resistant gas pressure regulators with atmospheric vent, elevation compensator with threaded ends for 2 inches and smaller, flanged ends for 2-1/2 inches and larger, for inlet and outlet gas pressures, specific gravity, and volume flow indicated on the drawings. All gas pressure regulators shall be ANSI/CSA approved.

B. Install as indicated and comply with all utility provider requirements. Pipe atmospheric vent to outdoors, full size of outlet. Install a gas shutoff valve upstream of each pressure regulating valve.

C. Gas pressure regulating valves shall be installed such that the pressure regulator vent is a minimum of 3 feet from any doors, openable windows, foundation vents, crawlspaces, electrical panels, phone and/or cable tv conduits, etc. The pressure regulator vent shall also be a minimum of 5 feet from any powered air intakes, evaporative coolers, make-up air louvers, etc.

2.8 EMERGENCY GAS SHUTOFF VALVES

A. Provide emergency gas shutoff valves where shown on the drawings. Valves shall be listed by either UL or FM and by either AGA or CSA, and shall be capable of being installed in either a horizontal or vertical position. Valve sizes ½" through 3" shall be Asco Series S261, or approved equal. Valve sizes 4" and 6" shall be AGS Merlin, or approved equal.

B. A strainer shall be installed upstream of each emergency gas shutoff valve. Strainers 3 inch and smaller shall be Titan YS-12-CI, or approved equal, with 40 mesh strainer and Buna gasket. Strainers 4 inch and larger shall be Titan YS-61-CS, or approved equal, with 40 mesh strainer and Buna gasket.

2.9 SEISMIC GAS SHUTOFF VALVES

A. Provide seismic gas shutoff valves where shown on the drawings. Seismic gas shutoff valves shall be California KOSO Valve manufactured by Pacific Seismic Products, with remote monitoring switch. Install seismic gas valve immediately outside the gas service entrance to each building. The gas piping immediately adjacent to the seismic gas shutoff valve shall be secured to the building with Unistrut channel bracing and a Unistrut Series P1100 pipe clamp.

2.10 FLEXIBLE CONNECTIONS

A. Provide flexible connections in gas piping at all equipment, including but not limited to, boilers, water heaters, furnaces, rooftop units, kitchen equipment, and clothes dryers. Flexible

connections shall be as Metraflex Model GASC, Mason Industries Model CSAMN, Unisource Series 400, or approved equal. Flexible connections shall be CSA approved.

PART 3 - EXECUTION

3.1 INSTALLATION OF GAS PIPING

A. Install piping and pipe fittings in accordance with recognized industry practices which will achieve permanently leakproof piping systems, capable of performing each indicated service without piping failure. Install each run with minimum joints and couplings but with adequate and accessible unions for disassembly and maintenance/replacement of valves and equipment. Reduce sizes where indicated by use of reducing fittings. Align piping accurately at connections, within 1/16 inch misalignment tolerance.

B. Comply with ANSI B31 Code for Pressure Piping.

C. Use sealants on metal gas piping threads which are chemically resistant to natural gas. Use sealants sparingly and apply to only male threads of metal joints.

D. Remove cutting and threading burrs before assembling piping.

E. Do not install defective piping or fittings. Do not use pipe with threads which are chipped, stripped, or damaged.

F. Plug each gas outlet, including valves, with threaded plug or cap immediately after installation and retain until continuing piping or equipment connections are completed.

G. Ground gas piping electrically and continuously within project, and bond tightly to grounding connection. Provide listed isolation fitting above grade prior to entry into building. Provide independent ground systems for above ground and below grade.

H. Install drip legs in gas piping where indicated and where required by code or regulation.

I. Install tee fitting with bottom outlet plugged or capped at bottom of pipe risers.

J. Install gas piping with 1/64 inch per foot (1/8 percent) downward slope in the direction of flow.

K. Maintain minimum of 12 inch clearance between gas piping and steam piping above 200°F.

L. Install magnesium anodes for underground steel pipe, one 5 lb anode for up to 100 feet in length and one 5 lb anode for each additional 100 feet.

M. Locate piping runs, except as otherwise indicated, vertically and horizontally (pitched to drain), and avoid diagonal runs wherever possible. Orient horizontal runs parallel with walls and column lines. Locate runs as shown or described by diagrams, details and notations, or if not otherwise indicated, run piping in shortest route which does not obstruct usable space or block access for servicing building and its equipment.

N. Hold piping close to walls, overhead construction, columns, and other structural and permanent enclosure elements of the building, limit clearance to ½ inch where furring is shown for enclosure or concealment of piping, locate insulated piping for a 1 inch clearance outside of the insulation. Wherever possible in finished and occupied spaces conceal piping from view by locating in column enclosures, in hollow wall construction, or above suspended ceilings. Do not encase horizontal runs in solid partitions, except as indicated on the drawings.

O. Electrical Equipment Spaces: Do not run piping through transformer vaults and other electrical or electronic equipment spaces and enclosures unless unavoidable. Install drip pans under piping that must be run through electrical spaces and in all other locations indicated on the drawings.

P. Should structural difficulties or work of other contractors prevent the running of pipes or the setting of equipment at the points shown, the necessary deviations therefrom, as determined by the Contractor, with the Architect/Engineer's review, will be allowed but must be made without additional cost to Owner.

Q. Inspect each piece of pipe and each fitting to see that there is no defective workmanship on pipe or obstructions in pipes and fittings.

R. Install exposed polished or enameled connections from fixtures or equipment with special care, showing no tool marks or threads at fittings.

S. Cap or plug openings in piping and fittings immediately to exclude all dirt until fixtures are installed or final connections are made.

T. Use reducing fittings where any change in pipe size occurs. Bushings shall not be used.

U. Couplings shall not be used except where required pipe runs between fittings are longer than a standard length of the type of pipe being used and except where their use is specifically reviewed by the Architect/Engineer.

V. Conceal piping in finished portions of building, above the floor line, except where otherwise shown or noted. Cutting of walls and floors shall be held to the minimum possible to secure the proper installation.

W. Install piping subject to expansion or contraction in a manner permitting strains to be evenly distributed and alleviated by expansion loops installed as required.

X. Sleeves for branches through walls from adjacent mains shall be of sufficient size to allow for free side motion of covered pipe in sleeve.

Y. Install polyethylene pipe where indicated on the drawings in accordance with ASTM D2774 ‘Standard Recommended Practice for Underground Installation of Thermoplastic Pressure Piping’ and as required by the manufacturer's installation instructions.
   1. Polyethylene pipe fittings shall be joined in accordance with the pipe manufacturer’s instructions.
   2. Connection of plastic pipe with metal pipe shall be only outside underground with ASTM D2513 category I transition fittings.
   3. Gas pipe risers to above grade, shall be metallic and shall be wrapped or coated to a point at least six inches above grade.
   4. When riser connects underground to plastic pipe, the underground horizontal metallic portion of the riser shall extend at least 30 inches before connecting to the plastic pipe.
   5. Heat fusion joints shall be made in accordance with qualified procedures that have been established and proven by test to produce gas tight joints at least as strong as the pipe or tubing being joined. Joints shall be made with the joining method recommended by the pipe manufacturer.
   6. Plastic pipe shall be buried with an electrically continuous corrosion resistant tracer wire (minimum 14 AWG) and tape to facilitate locating. One end of the wire and tape shall be brought above ground at a riser.

3.2 INSTALLATION OF HANGERS AND SUPPORTS

A. See Specification Section 220500 (Basic Materials and Methods for Plumbing).

3.3 INSTALLATION OF PIPING SYSTEM JOINTS

A. General: Provide joints of type indicated in each piping system.

B. Cut all steel pipe by power hacksaw, a circular cutting machine using an abrasive wheel, or in square end vise by means of hand hacksaw. Wheel cutters may be used for steel pipe provided that the pipe shall have ends reamed to full inside diameter and beveled before being made up into fittings. Pipe shall have round edges or burrs removed such that a smooth and unobstructed flow will be obtained.

C. Thread pipe in accordance with ANSI B2.1, cut threads full and clean using sharp dies. Ream threaded ends to remove burrs and restore full inside diameter. Apply pipe joint compound, RectorSeal No. 5, or approved equal, on male threads at each joint and tighten joint to leave not more than 3 threads exposed. Teflon tape may be used on piping 1-1/2 inches and smaller.

D. Use joint compound, same as specified for threaded pipe joints, on all cleanout plugs.

E. Weld pipe joints in accordance with recognized industry practice and as follows:
   1. Welding shall be done by qualified welders in a first class, workmanlike manner, conforming to the American Standard Code for Pressure Piping ANSI B31.1 and B31.1A.
   2. Bevel pipe ends at a 37.5 degree angle where possible, smooth rough cuts, and clean to remove slag, metal particles, and dirt.
   3. Do not weld out piping system imperfections using tack welding procedures. Re-fabricate piping to comply with requirements.

3.4 INSTALLATION OF FLANGED JOINTS

A. Match flanges within piping system and at connections with valves and equipment. Clean flange faces and install gaskets. Tighten bolts to provide uniform compression of gaskets.

3.5 INSTALLATION OF PROTECTIVE PIPE WRAP

A. Protect all steel pipe buried in ground from corrosion by the application of protective pipe wrap. Clean and prime pipe before application of the wrapping material.

3.6 INSTALLATION OF DETECTABLE UNDERGROUND WARNING TAPE

A. Protect all underground gas and/or fuel oil piping systems (when shown on the mechanical and/or plumbing drawings) with a detectable underground warning tape, as manufactured by Seton, or approved equal. This requirement applies to metallic and non-metallic piping (including polyethylene piping).

B. Detectable underground warning tape shall consist of 5 mil foil tape printed with associated pipe service (e.g., 'Caution Gas Line Below').

C. Tape shall be buried approximately one half of the pipe buried depth. Tape buried up to 24" deep shall be a minimum of 3" wide. Tape buried greater than 24" deep shall be a minimum of 6" wide.

3.7 INSTALLATION OF GAS PRESSURE REGULATING VALVES

A. Install as indicated and comply with all utility provider requirements. Pipe atmospheric vent to outdoors, full size of outlet. Install gas shutoff valve upstream of each pressure regulating valve.

B. Gas pressure regulating valves shall be installed such that the pressure regulator vent is a minimum of 3 feet from any doors, openable windows, foundation vents, crawlspaces, electrical panels, phone and/or cable tv conduits, etc. The pressure regulator vent shall also be a minimum of 5 feet from any powered air intakes, evaporative coolers, make-up air louvers, etc.

3.8 INSTALLATION OF GAS PIPING EQUIPMENT CONNECTIONS

A. Connect gas piping to each gas fired equipment item, with drip leg, gas shutoff valve, and flexible connection. Comply with the equipment manufacturer's instructions. Gas shutoff valves shall comply with 2018 UPC Section 1212.6 to be within 6 feet of the equipment and shall be installed no higher than 5 feet above finished floor.

3.9 PIPE CLEANING

A. Purge all newly installed natural gas piping with compressed air.

3.10 TEST OF PIPING

A. Test piping at completion of rough-in, in accordance with the following schedule and show no loss in pressure or visible leaks after a minimum duration of four hours at the test pressures indicated.

TEST SCHEDULE

SYSTEM TESTED	TEST PRESSURE	TEST WITH
Gas Piping	100 psi	Air

1. Testing equipment, materials, and labor shall be furnished by this Contractor.
2. Repair piping systems sections which fail required piping test, by disassembly and reinstallation, using new materials to extent required to overcome leakage. Do not use chemicals, stop-leak compounds, mastics, or other temporary repair methods.

3.11 CARE AND CLEANING

A. Repair or replace broken, damaged, or otherwise defective parts, materials, and work. Leave entire work in condition satisfactory to Architect/Engineer. At completion, carefully clean and adjust equipment, fixtures, and trim that are installed as part of this work. Leave systems and equipment in a satisfactory operating condition.

3.12 OPERATION TEST

A. Test each piece of equipment to show that it will operate in accordance with the indicated requirements.

3.13 CLEANING UP

A. Upon completion of the Work remove materials, equipment, apparatus, tools, and the like, and leave the premises clean, neat, and orderly.

END OF SECTION

SECTION 233100 - HVAC DUCTWORK

PART 1 - GENERAL

1.1 CONDITIONS OF THE CONTRACT

A. Sections 230000 (Heating, Ventilating, and Air Conditioning) and 230500 (Basic Materials and Methods for HVAC) are hereby made a part of this section.

1.2 WORK INCLUDED

A. Types of ductwork specified in this section include the following:
   1. Sheet Metal Ductwork
   2. Flexible Ductwork
   3. Internally Lined Ductwork
   4. Externally Insulated Ductwork
   5. Kitchen Exhaust Ductwork
   6. Fume Hood Exhaust Ductwork
   7. Clothes Dryer Exhaust Ductwork

1.3 QUALITY ASSURANCE

A. Installer: A firm with at least three years of successful installation experience on projects similar to that required for this work.

B. SMACNA Compliance: Comply with applicable portions of Sheet Metal and Air Conditioning Contractor's National Association (SMACNA) recommendations for all work in this section.

C. ASHRAE Standards: Comply with applicable portions of American Society of Heating, Refrigerating, and Air Conditioning Engineers (ASHRAE) recommendations for all work in this section.

D. NFPA Standards: Comply with applicable portions of ANSI/NFPA Standard 90A (Standard for the Installation of Air Conditioning and Ventilating Systems) and ANSI/NFPA 90B (Standard for the Installation of Warm Air Heating and Air Conditioning Systems) for all work in this section.

E. NAIMA Standards: Comply with all applicable portions of the North American Insulation Manufacturers Association (NAIMA) standards for all related work in this section.

1.4 SUBMITTALS

A. Refer to Section 013300 - Submittal Requirements for submittal procedures.

B. Product Data: Submit manufacturer's specifications on manufactured products and factory fabricated ductwork used for the work of this section.

C. As-Built Drawings: At project closeout, submit as-built drawings of installed ductwork, duct accessories, outlets, and inlets.

PART 2 - PRODUCTS

2.1 GENERAL

A. Fabricate all ductwork using a commercial grade of galvanized steel complying with the SMACNA HVAC Duct Construction Standards (latest edition) for the specified duct pressure class.

B. Fabricate ductwork with all accessories installed during fabrication to the greatest extent possible. Refer to Specification Section 233110 (HVAC Ductwork Accessories) for accessory requirements.

C. See Specification Section 230700 (HVAC Insulation) for additional related requirements.

D. All ductwork shall be constructed and sealed in accordance with the requirements of the Sheet Metal and Air Conditioning Contractor's National Association (SMACNA) unless indicated otherwise herein.

E. Construct and seal all ductwork in accordance with the pressure related to the equipment or system to which it is connected unless indicated otherwise herein. See Section 3.1 of this specification for additional requirements and clarification.

F. Ductwork upstream of terminal units shall be 4” w.g. pressure class and ductwork downstream of terminal units shall be 2” w.g. pressure class.

G. Wherever ductwork is to be exposed to view in occupied spaces, provide materials which are free from visual imperfections including pitting, seam marks, roller marks, oil canning, stains and discolorations, and other imperfections, including those which would impair painting.

H. Wherever ductwork is to be exposed to view in occupied spaces and is indicated to be painted, that ductwork shall be fabricated using a commercial grade of phosphatized, galvannealed, or bonderized sheet metal that is specifically formulated for painting.

I. Duct fittings shall be constructed to match the adjoining ductwork and to comply with all duct requirements applicable to fittings. See ‘Typical Branch Ducts’ details on the drawings for acceptable fitting types.

J. Turning Vanes in Rectangular Duct Elbows: Turning vanes shall be provided in all rectangular duct elbows unless indicated otherwise on the drawings (such as in return air transfer ducts). All turning vanes shall be double wall style. Turning vanes shall be SMACNA ‘Large’ (R=4.5”/SP=3.25”) for duct widths 14 inches and larger and shall be SMACNA ‘Small’ (R=2.0”/SP=1.5”) for duct widths 12 inches and smaller.

K. Except as otherwise indicated, or where a reaction between dissimilar metals might occur, provide hot-dipped galvanized steel fasteners, anchors, rods, straps, trim, and angles for support of all ductwork. Utilize Unistrut channel supports and hangers as appropriate for larger duct sizes. Penetrating ductwork with screws shall be avoided to the greatest extent possible. Wherever screws are required to penetrate ductwork the penetrations shall be sealed air and water tight.

2.2 TWO INCH PRESSURE CLASS DUCTWORK

A. Rectangular ductwork shall be fabricated using a commercial grade of galvanized steel complying with the SMACNA HVAC Duct Construction Standards (latest edition) for the specified duct

pressure class. Ductwork and fitting gauges shall be in accordance with Chapter 2 of the SMACNA HVAC Duct Construction Standards (latest edition).

B. Round ductwork shall be spiral lock seam round and/or oval duct and fittings.

2.3 FOUR INCH PRESSURE CLASS DUCTWORK

A. Rectangular ductwork shall be fabricated using a commercial grade of galvanized steel complying with the SMACNA HVAC Duct Construction Standards (latest edition) for the specified duct pressure class. Ductwork and fitting gauges shall be in accordance with Chapter 2 of the SMACNA HVAC Duct Construction Standards (latest edition).

B. Round ductwork shall be spiral lock seam round and/or oval duct and fittings.

2.4 ROUND DUCTWORK

A. Round Ductwork: Provide spiral lock seam prefabricated duct, constructed and sealed for 4 inch pressure class. The requirement for spiral lock seam round ducts also applies to 2 inch pressure class round ductwork. Longitudinal seam round ductwork is not acceptable.
   1. Available Manufacturers: Subject to compliance with requirements, manufacturers offering factory fabricated ductwork which may be incorporated in the work include the following, or approved equal:
   2. Manufacturer
   3. McGill Airflow Uni-Seal
   4. Semco
   5. OmniDuct
   6. Air Handling Systems

B. Spiral lock seam prefabricated factory-built round and oval duct and fittings shall be used wherever possible. Shop fabricated ducts shall be used only where rectangular shaped ducts are shown on the drawings or where transitions and special fittings cannot be prefabricated by the factory.

C. Optional Shop Fabricated Ductwork and Fittings: As an alternative to factory fabricated ductwork the Contractor may shop fabricate the spiral seam ductwork provided that certification is submitted and approved indicating that the shop fabricated ductwork and fittings are equal to that specified for factory fabricated ductwork and fittings.

D. Shop-fabricate ductwork in 4, 8, 10, or 12 foot lengths, unless otherwise indicated or required, to complete duct runs. Pre-assemble ductwork in the shop to the greatest extent possible, so as to minimize field assembly of systems. Disassemble systems only to the extent necessary for shipping and handling. Match and mark duct sections for reassembly and for a coordinated installation.

E. Round Fittings: The following round duct fittings shall be used, in accordance with what is depicted on the drawings.
   1. All round fittings shall be full bodied type. Adjustable elbows are not acceptable.
   2. Round elbows shall be constructed with a 1.5 radius to diameter (R/D) ratio.
   3. Smooth radius die-stamped 45 degree to 90 degree elbows for duct sizes up to 8 inches.
   4. Five piece 90 degree fully welded elbows for duct sizes 10 inches and larger.
   5. Low loss conical tees, conical laterals, reducing tees, and 90° crosses.
   6. Reducers and increasers shall be constructed for a maximum angle of 30 degrees.

7. Fabricate round supply connections at rectangular plenums in two inch pressure class low pressure ductwork (for example, downstream of terminal units) using spin-in type fittings, complete with scoop and manual balance damper.
8. Tap type fittings that require field cuts into the main ductwork will not be accepted.
9. No exceptions will be allowed on the listed fitting requirements.

F. Concealed Round Ductwork: Construct of galvanized sheet steel complying with ANSI/ASTM A653, in conformance with the listed manufacturing method, and in the listed minimum duct and fitting gauge.

	Diameter	Minimum Duct Gauge	Minimum Fitting Gauge	Manufacturing Method
2.	3" to 14"	28	28	Spiral Lockseam
3.	16" to 24"	26	26	Spiral Lockseam
4.	26" to 42"	24	24	Spiral Lockseam
5.	44" to 60"	22	22	Spiral Lockseam
6.	62" to 96"	20	20	Spiral Lockseam

G. Exposed Round Ductwork: Construct of galvanized sheet steel complying with ANSI/ASTM A653, in conformance with the listed manufacturing method, and in the listed minimum gauge.

	Diameter	Minimum Duct Gauge	Minimum Fitting Gauge	Manufacturing Method
2.	3" to 14"	26	26	Spiral Lockseam
3.	16" to 24"	24	24	Spiral Lockseam
4.	26" to 42"	22	22	Spiral Lockseam
5.	44" to 60"	20	20	Spiral Lockseam
6.	62" to 96"	18	18	Spiral Lockseam

H. Identification of Exposed Round Ductwork and Fittings: To allow for field verification of the appropriate gauge material, round duct and fitting factory labels shall be visible from the floor such that they can be observed prior to insulating.

2.5 HANGERS AND SUPPORTS FOR DUCTWORK

A. See Section 230530 (Hangers and Supports for HVAC Systems)

2.6 SEISMIC BRACING FOR DUCTWORK

A. See Section 230540 (Seismic Bracing for HVAC Systems)

2.7 DUCTWORK INSULATION

A. All 4 inch pressure class rectangular and round ductwork shall be externally insulated. See Specification Section 230700 (HVAC Insulation).

B. All 2 inch pressure class rectangular supply, return, and outside air ductwork shall be externally insulated (unless specifically indicated otherwise in these specifications or on the drawings). See Specification Section 230700 (HVAC Insulation).

C. All 2 inch pressure class round ductwork shall be externally insulated (unless specifically indicated otherwise in these specifications or on the drawings). See Specification Section 230700 (HVAC Insulation).

D. Internal Duct Liner Insulation (When Specified Below and/or Indicated on the Drawings):
1. Provide internal duct liner for the following, unless indicated otherwise on the drawings:
   a. The first 5 feet of rectangular ductwork downstream of each rooftop unit.

b. The first 5 feet of rectangular ductwork downstream of each heat pump.
c. The first 4 feet of rectangular ductwork downstream of each terminal unit.
d. Rectangular transfer air ducts.
e. Rectangular ductwork that is exposed in a mechanical room, mezzanine area, or other space and is less than 8'-0" above finished floor.
f. Rectangular ductwork elsewhere as noted on the drawings.

2. Internal duct liner shall be 1-1/2" thick ArmaFlex FS Self-Adhering Duct Liner, or approved equal, with an insulating value of R-6 and a 25/50 flame and smoke spread rating in accordance with ASTM E84.
3. Alternatives to applying ArmaFlex FS Duct Liner without the self-adhering feature include using ArmaFlex 520 Adhesive or using ArmaFlex Low VOS Spray Adhesive.
4. Secure duct liner with weld pins or with Duro-Dyne PBH Dynastick Fasteners adhered with Duro-Dyne PBACZVOC Dynastick Adhesive. Weld pins or fasteners shall be placed on 18" centers and within 6 inches of insulation edges and seams.
5. Cut and secure internal duct liner in strict accordance with the duct liner manufacturer's written application instructions.
6. Adjust duct sizes to accommodate liner thickness to provide the net internal duct dimensions shown on the drawings.

2.8 MISCELLANEOUS DUCTWORK MATERIALS

A. Provide miscellaneous materials and products of types and sizes indicated, unless otherwise indicated. Provide per the requirements listed in the latest SMACNA manuals, including proper connection of ductwork and equipment.

B. Duct Joints: Join and seal prefabricated, factory built ducts, fittings, and couplings in strict accordance with duct manufacturer's instructions. Install duct sealers, pop rivets, or sheet metal screws, canvas, and lagging adhesive on each joint. Duct sealer shall be fire retardant. Sheet metal screws for joints shall be minimum #10 size galvanized.

2.9 SEALANTS

A. Duct sealant shall be water-based, non-fibrated, and fire resistive with a UL 181B listing for use on low, medium, and high pressure ductwork. Sealant VOC levels shall also meet all federal, state, and local requirements and be classified with mildew resistance per ASTM G21 with 0 growth rating.

B. Sealant shall be rated for up to 10" w.g. and shall be installed in strict accordance with the manufacturer's written instructions. Pressure sensitive tapes are not acceptable.

C. Subject to compliance with requirements, manufacturers offering sealants which may be incorporated in the work include the following:
1. Design Polymerics DP-1010
2. Hardcast Iron-Grip 601
3. Foster 32-19
4. Childers CP-146

2.10 DUCT ACCESS PANELS

A. Provide access panel sections in prefabricated, factory-built ducts for access to fire dampers, control equipment, etc. as specified in Specification Section 233110 (HVAC Ductwork Accessories). Access panel size shall be duct diameter wide by duct diameter high for all ducts

under 24 inches. Ducts over 24 inches in diameter shall have 24 inch by 18 inch access panels. Minimum access panel size shall be 6 inch by 6 inch.

2.11 FLEXIBLE DUCTS

A. Flexible ducts may be used in concealed areas where detailed and as specified.

B. Flexible ducts shall consist of an exterior reinforced laminated vapor barrier, 2 inch thick fiberglass insulation (R-6), encapsulated spring steel wire helix, and impervious, smooth, non-perforated interior vinyl liner. Each individual length of flexible duct shall include factory fabricated steel connection collars. Flexible ducts shall be UL approved and tested and shall meet Class 1 requirements of NFPA 90A.

C. Flexible ducts from rigid runouts to diffusers and registers shall be Thermaflex M-KE, or approved equal, with a maximum length of 5 feet.

D. Comply with all applicable portions of the Air Duct Council Flexible Duct Performance and Installation Standards.

2.12 CLOTHES DRYER EXHAUST DUCTWORK

A. Provide aluminum ducts sized as indicated on the drawings. Provide wall cap with backdraft damper at exterior wall where indicated on the drawings. Exhaust ducts shall be connected without using screws or other fastening means that extend inside the duct.

2.13 EXTERIOR DUCTWORK

A. For projects that include exterior ductwork see Specification Section 233120 (Exterior Ductwork).

2.14 KITCHEN AND LABORATORY EXHAUST DUCTWORK

A. Where indicated on the drawings exhaust ductwork and fittings serving fume hoods shall be Type 316L stainless steel with welded joints and shall be constructed for 2 inch or 4 inch pressure class as appropriate for the associated equipment and duct arrangement.

B. All exhaust ductwork and fittings serving kitchen hoods shall be Type 316L stainless steel with welded joints and shall be constructed for 2 inch or 4 inch pressure class as appropriate for the associated equipment and duct arrangement.

C. All control dampers in stainless steel ductwork shall be constructed of stainless steel and shall have flanged connections.

2.15 ADDITIONAL REQUIREMENTS FOR TYPE 1 KITCHEN GREASE HOOD EXHAUST DUCTS

A. Install ducts in accordance with NFPA 96 (Ventilation Control and Fire Protection of Commercial Cooking Operations), SMACNA Kitchen Ventilation Systems and Food Service Equipment Fabrication and Installation Guidelines, and Uniform Mechanical Code Section 510.

B. Install all ducts without dips or traps that may hold grease. Ducts on horizontal runs up to 75 feet long shall be sloped at a minimum of 2% to allow grease to drain back to the hood. Ducts on horizontal runs longer than 75 feet long shall be sloped at a minimum of 8%. Drains shall be installed at low points in horizontal ducts, and shall be continuously welded to the exhaust duct.

C. All joints shall be welded and shall be telescoping, bell, or flange joint per NFPA 96.

D. Install fire rated access panel assemblies at each change in direction and at maximum intervals of every 12 feet in horizontal ducts, and at every floor for vertical ducts, or as indicated on the drawings.

E. Do not penetrate fire rated assemblies except as allowed by applicable building codes and the authorities having jurisdiction.

2.16 ADDITIONAL REQUIREMENTS FOR EXHAUST DUCTS SERVING DISHWASHERS

A. Install dishwasher exhaust ducts and other exhaust ducts from wet, high humidity locations without dips or traps that may hold water. Slope ducts at a minimum of 2% back to the dishwasher.

B. Provide a drain pocket at each low point and at the base of each riser with a 1 inch trapped copper drain from each drain pocket to an open site floor drain.

C. Minimize the number of transverse seams to the greatest extent possible.

D. Do not locate longitudinal seams on the bottom of a duct.

2.17 ADDITIONAL REQUIREMENTS FOR LAB EXHAUST AND FUME HOOD EXHAUST DUCTS

A. Install ducts in accordance with NFPA 45 (Fire Protection for Laboratories Using Chemicals).

B. Install exhaust ducts without dips or traps that may hold water. Slope ducts at a minimum of 2% back to the hood or inlet. Where indicated on the drawings, install trapped drain piping.

PART 3 - EXECUTION

3.1 INSTALLATION OF DUCTWORK

A. Assemble and install ductwork to achieve air tight and noiseless (no objectionable noise) systems capable of performing each indicated service.

B. Install each run with minimum of joints. Align ductwork accurately at connections within 1/8 inch misalignment tolerance and with internal surfaces smooth. Support ducts rigidly with suitable ties, braces, hangers, and anchors of type which will hold ducts true to shape and to prevent buckling.

C. Install concrete inserts for support of ductwork in coordination with formwork as required to avoid delays in work.

D. Where ducts pass through interior partitions and exterior walls, conceal space between construction opening and duct or duct-plus-insulation with sheet metal flanges of same gauge as duct. Overlap opening on four sides by at least 1-1/2 inches.

E. Support ductwork and piping in a manner complying with Section 230530 (Hangers and Supports for HVAC Piping and Equipment). Where special hanging of ductwork or piping is detailed or shown on drawings, the drawings shall be followed.

F. Duct hangers used in areas where a specialty architectural ceiling or floor occurs shall be compatible for use with that system. See architectural and structural drawings for locations.

G. Seal all ductwork to the seal class required in the following table, and using the methods prescribed in the SMACNA HVAC Air Duct Leakage Test Manual, latest edition.

Duct Class	Up to 2" w.g.	3" w.g.	4" thru 10" w.g. or exposed to weather
Seal Class	C	B	A
Sealing	Transverse Joints Only	Transverse Joints and Seams	Joints, Seams, and all Applicable Wall Penetrations
Leakage Class			
Rectangular Metal	16	8	4
Round Metal	8	4	2

1. Sealant shall be applied 3 inches wide and at 32 mil wet film thickness.
2. For ducts greater than 2" pressure class, or exposed to weather, a first layer of sealant shall be applied to an 18 mil thickness, with scrim applied over the sealant, and then another 18 mil thickness of sealant shall be applied over the scrim.

3.2 DUCT LEAKAGE TESTING

A. Leakage testing is not required for low pressure ductwork (2" w.g. and below).

B. As the medium pressure duct systems are installed, each system shall be leak tested in an orderly sequence as appropriate to minimize the impact on the overall construction schedule. Medium pressure duct systems may be tested in sections as the work progresses, with all open ends capped and sealed. Leak testing shall be performed in accordance with the SMACNA HVAC Air Duct Leakage Test Manual (most current edition) and in accordance with the test requirements listed in the following paragraphs.

C. All medium pressure ductwork shall be leak tested in sections as the work progresses, and as directed by the Architect/Engineer.

D. All medium pressure ductwork leak testing shall be witnessed and documented by the test and balance contractor.

E. All medium pressure duct system joints/connections shall be reviewed by the test and balance contractor prior to commencement of any duct leakage testing. The test and balance contractor shall verify in writing that the reviewed sections or systems are in compliance with the sealing requirements listed herein, prior to testing.

F. The maximum allowable duct leakage for each medium pressure ductwork system (systems rated for 3" w.g. and above) is 1% of the total design airflow after all ductwork sections have been tested.

G. The maximum total allowable duct leakage for each laboratory exhaust air handling system is 0.5% of the total design airflow after all ductwork sections have been tested.

H. Test fans shall be capable of supplying at least 110% of the design airflow.

I. In no case shall any duct leakage test pressure exceed the pressure rating of the installed ductwork.

J. Duct leakage testing for medium pressure ductwork shall be in accordance with the following:
   1. Leak testing for medium pressure ductwork (3" w.g. thru 3.5" w.g.) Leakage Class 12
   2. Leak testing for medium pressure ductwork (4" w.g. thru 6" w.g.) Leakage Class 6
   3. Leak testing for medium pressure ductwork (above 6" w.g.) Leakage Class 3

3.3 INSTALLATION OF FLEXIBLE DUCTWORK

A. Provide supports at or near the mid-length point using 2 inch wide 28 gauge steel hanger collars attached to the structure with an approved duct hanger. Installation shall eliminate sharp radius turns, offsets, or kinks.

B. Bends in flexible ductwork shall be kept to a minimum. The minimum bend radius shall be 1.5 times the duct diameter with no bends greater than 45 degrees. This specifications and any applicable drawings or details shall be strictly adhered to.

C. Each length of flexible duct shall be provided with steel connection collars.

D. Make connections to rigid duct and equipment with draw bands and sealer, and then apply duct tape over outside of sheath.

3.4 CLEANING AND PROTECTION

A. Clean ductwork internally, unit by unit as it is installed, of any dust and debris. Clean external surfaces of foreign substances which might cause corrosive deterioration of metal or where ductwork is to be painted.

B. Strip protective paper from stainless steel ductwork surfaces, and repair finish wherever it has been damaged.

C. Temporary Closure: At ends of ducts which are not connected to equipment or air distribution devices at the time of ductwork installation, provide temporary closure using polyethylene film or other covering which will prevent entrance of dust and debris until the time that connections are to be completed.

3.5 CLEANING UP

A. Upon completion of the Work remove materials, equipment, apparatus, and tools, and leave the premises clean, neat, and orderly.

END OF SECTION

SECTION 233110 - HVAC DUCTWORK ACCESSORIES

PART 1 - GENERAL

1.1 CONDITIONS OF THE CONTRACT

A. Sections 230000 (Heating, Ventilating, and Air Conditioning) and 230500 (Basic Materials and Methods for HVAC) are hereby made a part of this section.

1.2 WORK INCLUDED

A. Types of ductwork accessories specified in this section include volume dampers, control dampers, fire-smoke dampers, turning vanes, duct hardware, duct access doors, flexible connections, and backdraft dampers.

1.3 QUALITY ASSURANCE

A. SMACNA Compliance: Comply with applicable portions of Sheet Metal and Air Conditioning Contractor's National Association (SMACNA) HVAC Duct Construction Standards (Metal and Flexible) latest edition, for all work in this section.

B. ASHRAE Standards: Comply with American Society of Heating, Refrigerating, and Air Conditioning Engineers (ASHRAE) recommendations, latest edition, for all work in this section.

C. NFPA Compliance: Comply with ANSI/NFPA 90A (Standard for the Installation of Air Conditioning and Ventilating Systems) and ANSI/NFPA 90B (Standard for the Installation of Warm Air Heating and Air Conditioning Systems).

D. Compliance: Construct, test, install and label fire dampers and fire doors in accordance with Underwriters Laboratories (UL) Standard 555 (Fire Dampers and Ceiling Dampers).

E. Dampers shall be warranted against manufacturing defects for a period of 5 years.

F. Dampers shall be tested, rated and labeled in accordance with the latest requirements of UL 555 (Fire Dampers) and UL 555S (Smoke Dampers).

G. Damper pressure drop ratings shall be based on tests and procedures performed in accordance with AMCA 500.

H. Damper pressure drop ratings shall be based on tests and procedures performed in accordance with AMCA 500 and certified in accordance with AMCA 500D.

1.4 REFERENCES

A. AMCA 500D Laboratory Test Methods for Testing Dampers for Ratings

B. AMCA 511 Certified Ratings Program for Air Control Devices

C. IBC International Building Code

D. NFPA 80 Fire Doors and Other Opening Protectives

E. NFPA 90A Standard for the Installation of Air Conditioning and Ventilating Systems

F.	NFPA 90B	Standard for the Installation of Warm Air Heating and Air Conditioning Systems
G.	NFPA 92A	Smoke Control Systems
H.	NFPA 101	Life Safety Code
I.	NFPA 105	Standard for the Installation of Smoke Door Assemblies
J.	UL 555	Standard for Safety; Fire Dampers
K.	UL 555S	Standard for Safety; Smoke Dampers

1.5 SUBMITTALS

A. Refer to Section 013300 - Submittal Requirements for submittal procedures.

B. Product Data: Submit manufacturer's product data for each type of ductwork accessory, including dimensions, capacities, and materials of construction, and installation instructions.

C. Fire-Smoke Dampers: Submit complete installation instructions for all types of fire damper to be used on this project, as part of main submittal.

PART 2 - PRODUCTS

2.1 TURNING VANES

A. Fabricated Turning Vanes: Provide fabricated turning vanes and vane runners, constructed in accordance with SMACNA HVAC Duct Construction Standards, latest edition

B. Turning Vanes in Rectangular Duct Elbows: Turning vanes shall be provided in all rectangular duct elbows unless indicated otherwise on the drawings (such as in return air transfer ducts). All turning vanes shall be double wall style. Turning vanes shall be SMACNA ‘Large’ (R=4.5”/SP=3.25”) for duct widths 14 inches and larger and shall be SMACNA ‘Small’ (R=2.0”/SP=1.5”) for duct widths 12 inches and smaller.

C. Available Manufacturers: Subject to compliance with requirements, manufacturers offering turning vanes which may be incorporated in the work include the following:
   1. Anemostat
   2. Airsan Corporation

2.2 DUCT HARDWARE

A. Provide duct hardware manufactured by one manufacturer for all items on project for the following:
   1. Test Holes: Provide in ductwork at fan inlet and outlet and elsewhere as required. Plastic test plugs may only be used on low pressure ductwork (2” w.g. or less). Test holes installed in medium pressure ductwork (above 2” w.g.) and at outdoor equipment shall be covered with Ventlok Model 699 covers, or approved equal.
   2. Quadrant Locks: Provide for each damper quadrant lock device on one end of shaft and end-bearing plate on other end. Provide extended quadrant locks and extended bearing plates for externally insulated ductwork.

B. Available Manufacturers: Subject to compliance with requirements, manufacturers offering duct hardware which may be incorporated in the work include the following:
   1. Ventfabrics
   2. Ventlok by Ventfabrics

2.3 DUCT ACCESS DOORS

A. Provide airtight access doors in ducts and plenums for cleaning and repairs for volume and fire dampers for control devices within such ductwork and where shown on the Drawings.

B. Access doors into 2 inch pressure class ductwork shall be made of No. 24 gauge galvanized steel minimum, reinforced with angle iron stiffeners. Doors shall be hinged and provided with latches and gasket around entire edge to provide an airtight fit. Reinforce openings for doors with structural steel.

C. Access doors into ductwork greater than 2 inch pressure class shall be side-mounted equal to Nailor Series 0800 for rectangular ducts and Nailor Series 0895 for round ducts. Access doors shall be tested at 8-inch static pressure. Access door height shall not be less than 75% of duct height.

D. Access doors shall be sandwich-type construction, consisting of three layers of .030” galvanized steel. The inside door shall combine two layers of metal spot-welded together at rim and encapsulating high density fiberglass insulation, UL classified FHC 25/50. Doors shall have a minimum total R-value of 4.0. Access doors shall be pressure rated for 20” w.g. positive pressure and 10” w.g. negative pressure, with no leakage.

E. Identification: Access doors shall be permanently identified on the exterior by a label with letters not less than 1/2 inch in height reading ‘Fire-Smoke Damper’.

F. Available Manufacturers: Subject to compliance with requirements, manufacturers offering duct access doors which may be incorporated in the work include the following:
   1. Nailor
   2. Air Balance
   3. United McGill

2.4 FLEXIBLE CONNECTIONS

A. Furnish and install flexible connections at following locations:
   1. At supply connection on all motorized heating and cooling equipment.
   2. At return connection on all motorized heating and cooling equipment.
   3. At duct connection on all exhaust fans.
   4. Elsewhere as shown on the drawings.

B. Flexible connections are not required for curb-mounted or roof-mounted exhaust fans.

C. Flexible duct connections shall be preassembled flexible connectors constructed of coated glass fabric applied in accordance with manufacturer's recommendations. Width of flexible connections shall be sufficient to allow minimum of 2 inches of free space between two metal collars to be connected. Install sheet metal band completely around duct or fan outlet, at end of flexible connection. Fasten with metal screws through band and coated glass fabric. Space screws approximately 3 inches apart. Coated glass fabric shall be equal to Ventfabrics Ventglas with neoprene coating for use inside building and Ventlon with hypalon coating when exposed to weather.

D. Available Manufacturers: Subject to compliance with requirements, manufacturers offering flexible connections which may be incorporated in the work include the following:
   1. Ventfabrics
   2. Thermaflex

2.5 MANUAL VOLUME DAMPERS, CONTROL DAMPERS, AND BACKDRAFT DAMPERS

A. Manual Dampers: Provide dampers of single-blade type or multi-blade type constructed in accordance with SMACNA (HVAC Duct Construction Standards), latest edition. Damper blades shall not exceed 6 inches in width, except that 8 inch wide dampers may be used in 8 inch wide ducts.

B. Concealed Damper Actuators: Where dampers are installed above non-accessible ceilings and are not served by access doors, provide extension cables and concealed ceiling mounted damper regulators. Damper regulator shall be Young Regulator Model 270-896, or approved equal.

C. Remote Powered Balancing Dampers: Where indicated on the drawings, provide remote powered balancing dampers complete with motorized damper, connecting cable, wall plate with ports, and battery powered remote control device. Dampers shall be Greenheck Model RBDR-50, Pottorff Model RD-10R, or approved equal.

D. Control Dampers: Provide dampers with low leakage opposed blades, frame and blades constructed of 16 gauge galvanized steel, suitable for electric actuators.

E. Backdraft Dampers: Provide dampers with parallel blades, constructed of 16 gauge aluminum; provide 1/2 inch diameter ball bearings, 1/2 inch diameter steel axles spaced on 9 inch centers. Construct frame of 2” x ½” x 1/8” thick steel channel for face areas 25 sf and under; and 4” x 1-1/4” x 16 gauge channel for face areas over 25 sf. Provide galvanized steel finish on frame with aluminum touch-up.

F. Available Manufacturers: Subject to compliance with requirements, manufacturers offering dampers which may be incorporated in the work include the following:
   1. Greenheck
   2. Ruskin
   3. Pottorff
   4. Air Balance

2.6 COMBINATION FIRE-SMOKE DAMPERS

A. Greenheck Model FSD-311, Ruskin Model FSD-60, or approved equal, with test switch.
   1. Both UL555 and UL555S Classified, rated as a 1-1/2 hour fire damper and as a Leakage Class I smoke damper.
   2. Elevated Temperature Rating: 350ºF
   3. Airflow Rating: 4,000 fpm
   4. Differential Pressure Rating: 4 inches w.g.

B. Construction
   1. Frame: Hat-shaped channel, roll-formed, galvanized steel with interlocking gusseted corners. Low profile geometry and 20 gauge top and bottom frame members on damper sizes less than 17 inches high to maximize free area.
   2. Blades: 14 gauge galvanized steel with airfoil blades.
   3. Blade Seals: Silicone rubber mechanically secured to blade.

4. Jamb Seals: Flexible stainless steel compression type.
5. Axles: Minimum 1/2" diameter zinc plated steel.
6. Bearings: Stainless steel sleeve type rotating in polished extruded holes in the damper frame.
7. Linkage: Non-adjustable and concealed in the damper frame.
8. Fire Closure Device: Reusable/Resettable link.

C. Fire Closure Temperature:
1. The fire-smoke damper shall be equipped with a factory installed heat responsive device rated to close the damper when the temperature at the damper reaches 165°F.

D. Actuator:
1. Electrical: 120 Volt, two-position, fail closed.
2. Mounting: External (Outside of Duct).

E. Required Options:
1. Test switch with open/closed indication.
2. Dual contacts to allow monitoring by the fire alarm panel and direct digital control system.
3. Factory sleeve.
4. Factory access door.

F. Available Manufacturers: Subject to compliance with requirements, manufacturers offering fire-smoke dampers which may be incorporated in the work include the following:
1. Greenheck Model FSD-311
2. Ruskin Model FSD-60

2.7 FIRE DAMPERS

A. Furnish and install curtain type dynamic fire dampers at all locations shown on the drawings, and/or as described in the fire damper schedule on the drawings. Dynamic fire dampers shall be tested, constructed, and labeled in accordance with the latest edition of UL Standard 555. Fire dampers shall have a fire rating of 1-1/2 hours, unless scheduled or shown otherwise, and shall meet the requirements of the latest edition of NFPA 90A.

B. Submittal information shall include the UL ratings for fire resistance, velocity, differential pressure, size limitations, and mounting orientation. The manufacturer's UL installation instructions shall also be provided. Fire dampers shall be installed in strict accordance with the manufacturer's UL installation instructions.

C. Fire damper frame and blades shall be galvanized steel in gauges required by the fire damper manufacturer's UL listing. Fire damper blades shall be steel curtain style. Each dynamic fire damper shall include a factory steel sleeve and retaining angles furnished by the fire damper manufacturer.

D. Each fire damper shall include a 212°F fusible link. Each fire damper shall be labeled for use in dynamic systems. Fire dampers labeled for use in static systems only are not permitted. Fire dampers shall be rated for dynamic closure at 4,000 fpm and 4 inches w.g. static pressure, and shall be rated to close with airflow in either direction.

E. Required Options:
1. Factory sleeve.
2. Factory access door.

F. Available Manufacturers: Subject to compliance with requirements, manufacturers offering fire dampers which may be incorporated in the work include the following:
   1. Greenheck DFD-100 Series
   2. Ruskin Model DIBD2
   3. Air Balance

2.8 CEILING FIRE/RADIATION DAMPERS

A. Furnish and install at all locations shown on the drawings, and/or as described in the ceiling fire/radiation damper schedule on the drawings. Fire rating shall be 3 hours rated in accordance with UL 555C. Each fire damper shall include a 212°F fusible link.

B. Submittal information shall include the UL ratings for fire resistance, velocity, differential pressure, size limitations, and mounting orientation. The manufacturer's UL installation instructions shall also be provided. Ceiling fire/radiation dampers shall be installed in strict accordance with the manufacturer's UL installation instructions.

C. Frame and blades shall be constructed of galvanized steel in gauges required by UL R13446. When blade insulation is required due to damper size, blade insulation shall non-asbestos and of a UL approved material. Each blade stop (top and bottom) shall occupy no more than 1/2 inch of the damper opening to maximize the free area and to minimize pressure drop.

D. Required Options:
   1. Factory sleeve.
   2. Factory access door.

E. Furnish each ceiling radiation damper with a ceramic fiber thermal blanket.

F. Available Manufacturers: Subject to compliance with requirements, manufacturers offering fire/radiation dampers which may be incorporated in the work include the following:
   1. Greenheck
   2. Ruskin CFD Series
   3. Air Balance

2.9 DUCT SMOKE DETECTORS

A. Furnish and install duct smoke detectors at locations shown on the drawings, as described in the equipment schedules, and as described herein. Duct smoke detectors may be indicated to be furnished with certain air handling equipment, or may be indicated to be furnished by Division 23 or Division 26. Duct detector wiring shall be by Division 26 in accordance with wiring diagrams furnished by Division 23. In any case, it is the mechanical contractor's responsibility to ensure that their bid includes a fully complete and functional installation that complies with the intended functionality and all applicable code requirements.

B. Duct smoke detectors shall be installed in conformance with Uniform Mechanical Code Section 608 on all air handling units that have a scheduled airflow in excess of 2,000 cfm. Duct smoke detectors shall be installed in the supply air discharge of such air handling equipment. In cases where the local Authority Having Jurisdiction requires a duct smoke detector in the return air of air handling units that have a scheduled airflow in excess of 2,000 cfm such smoke detectors shall be installed in addition to the supply air duct smoke detector specified in this section.

C. Air handling units that have a scheduled airflow in excess of 15,000 cfm that serve multiple floors of a building shall have duct smoke detectors installed in the return air duct where the return air exits each floor of the building (prior to the main return air riser) in addition to the supply air duct smoke detector specified in this section.

D. In cases where a specific model of duct smoke detector is not indicated on the drawings, duct smoke detectors shall be manufactured by Edwards, Notifier, or approved equal. On projects where the duct smoke detectors will be connected to an existing fire alarm system, the new duct detectors shall match the existing system manufacturer's devices. Duct detectors shall include auxiliary contacts for interface with the fire alarm system.

2.10 FUME HOOD DUCT INSULATION AT FIRE RATED PENETRATIONS

A. Provide fire rated insulation on any fume hood exhaust ductwork at a fire rated separation (10 feet of insulation on each side of the fire rated separation as required by NFPA 45 Section 7.5.10.2). See Specification Section 230700 (HVAC Insulation).

2.11 AIR FLOW MEASURING STATIONS

A. See Specification Section 230900 (Temperature Controls).

PART 3 - EXECUTION

3.1 INSTALLATION OF DUCT ACCESSORIES

A. Install duct accessories in accordance with the manufacturer's installation instructions, with applicable portions of details of construction as shown in the SMACNA Standards, and in accordance with recognized industry practices as necessary to ensure that the products serve the intended function.

B. Install turning vanes in square and/or rectangular 90 degree elbows in supply and exhaust air systems and elsewhere as indicated.

C. Install access doors to open against system air pressure, with latches operable from either side, except on the outside only where the duct is too small for a person to enter.

D. Coordinate with other work as necessary to interface installation of duct accessories properly with other work.

E. Field Quality Control: Operate installed duct accessories to demonstrate compliance with requirements. Test for air leakage while system is operating. Repair or replace faulty accessories as required to obtain proper operation and leak-proof performance.

3.2 CARE AND CLEANING

A. Repair or replace broken, damaged, or otherwise defective parts, materials, and work. Leave entire work in condition satisfactory to the Architect/Engineer. At completion, carefully clean and adjust equipment, fixtures, and trim installed as part of this work. Leave systems and equipment in satisfactory operating condition.

3.3 INSPECTION OF FIRE-SMOKE DAMPERS

A. Upon completion of this work all fire-smoke dampers shall be tested by the installing contractor in the presence of the local fire department. Provide spare fusible links as required to complete testing to the complete satisfaction of the local fire department.

3.4 OPERATION TEST

A. Test each piece of equipment to show that it will operate in accordance with the indicated requirements.

3.5 CLEANING UP

A. Upon completion of the Work remove materials, equipment, apparatus, tools, and the like, and leave the premises clean, neat, and orderly.

END OF SECTION

SECTION 233120 - EXTERIOR DUCTWORK

PART 1 - GENERAL

1.1 CONDITIONS OF THE CONTRACT

A. Sections 230000 (Heating, Ventilating, and Air Conditioning) and 230500 (Basic Materials and Methods for HVAC) are hereby made a part of this section.

1.2 WORK INCLUDED

A. Types of ductwork specified in this section include the following:
   1. Exterior Ductwork

1.3 QUALITY ASSURANCE

A. Acceptable Manufacturers: Subject to compliance with requirements, manufacturers offering exterior ductwork systems which may be incorporated in the work include the following, or approved equal:
   1. Thermaduct
   2. Q-Duct

B. Manufacturer's Qualifications: Firms regularly engaged in manufacture of exterior ductwork systems of types, materials, and sizes required, whose products have been in satisfactory use in similar service for not less than 5 years.

C. Installer Qualifications: A firm with at least three years of successful installation experience on projects similar to that required for this work.

D. SMACNA Compliance: Comply with applicable portions of Sheet Metal and Air Conditioning Contractor's National Association (SMACNA) recommendations for all work in this section.

E. ASHRAE Standards: Comply with applicable portions of American Society of Heating, Refrigerating, and Air Conditioning Engineers recommendations for all work in this section.

F. NFPA Standards: Comply with applicable portions of NFPA Standard 90A (Standard for the Installation of Air Conditioning and Ventilating Systems) and NFPA 90B (Standard for the Installation of Warm Air Heating and Air Conditioning Systems) for all work in this section.

1.4 SUBMITTALS

A. Refer to Section 013300 - Submittal Requirements for submittal procedures.

B. Product Data: Submit duct system manufacturer's specifications, installation, bracing, and support requirements for the work of this section.

C. As-Built Drawings: At project closeout, submit as-built drawings of installed ductwork, duct accessories, outlets, and inlets.

PART 2 - PRODUCTS

2.1 GENERAL

A. Exterior ductwork shall be installed in strict accordance with duct manufacturer’s written installation instructions.

B. Construct and seal all exterior ductwork in accordance with the pressure related to the equipment or system to which it is connected unless indicated otherwise herein.

C. All duct insulation R-Values and thicknesses shall meet or exceed the requirements listed in International Energy Conservation Code Section C403.11.1.

2.2 THERMADUCT RECTANGULAR DUCT AND FITTINGS

A. The panel shall be manufactured of CFC-free closed cell rigid thermoset resin thermally bonded on both sides to a factory applied .001" aluminum foil facing reinforced with a fiberglass scrim. An added UV stable, IR reflective 1,000 micron high impact resistant titanium infused vinyl shall be factory bonded using a full lamination process.

B. The panel lamination process shall permanently bond the vinyl clad to the outer surfaces of the phenolic foam panel to provide a zero permeability watertight barrier and to form a structurally insulated panel (SIP) in which to form duct segments. Processes that do not employ a full lamination process are not acceptable.

C. Self-applied adhesives such as tapes, caulks, or cladding that incorporate pressure sensitive or spray adhesives are not acceptable.

D. Foam density shall be 3.5 pcf minimum with a minimum compressive strength of 28 psi.

E. Panel Construction
   1. R-Value: R-12 minimum (1-3/4” Wall Panels) as required by IECC Section C403.11.1.
   2. Duct pressure class shall be as required for the application shown on the drawings. Thermaduct is available in either 2” w.c. or 4” w.c. pressure classes.
   3. Maximum Thermal Conductivity: 0.146 btu-in/hr-sf-°F at 75°F mean temperature.
   4. All insulation materials shall be closed cell with a minimum closed cell content of 90%.
   5. Maximum Temperature: Continuous temperature rating of 185°F inside ducts and 185°F ambient surrounding ducts.
   6. Permeability: 0.0 perms maximum tested according to ASTM E96/E96M (Procedure A).
   7. Anti-Microbial Agent: An additive for anti-microbial shall not be used, but instead, the raw product must pass UL bacteria growth testing.
   8. Noise Reduction Coefficient: 0.05 minimum NRC tested in accordance with ASTM C423 (Mounting Type A).
   9. Required Markings: All interior duct liner shall bear UL label and other markings required by UL 181 on each full sheet of duct panel; UL ratings for internal closure materials.

F. Closure Materials
   1. V-Groove Adhesive: Silicone (interior only).
   2. UV stable 1000 micron high impact resistant titanium infused vinyl (exterior).
      a. Factory manufactured seamless corners for zero perms.
      b. Cohesive bonded over-lap at corner seam covers for zero perms.
      c. Water resistant titanium infused welded vinyl seams.
      d. Mold and mildew resistant.
   3. Polymeric Sealing System:
      a. Structural Membrane: Aluminum scrim with woven glass fiber with UV stable vinyl clad applied.
      b. Minimum Seam Cover Width: 2 7/8” inches.
      c. Sealant: Low VOC.

d. Color: Standard White (Colors Selected by Architect are Optional).
e. Water resistant.
f. Mold and mildew resistant.
g. Duct Connectors: Factory manufactured, galvanized, with 4 bolt flange.

G. Outdoor Cladding for Outdoor Installations: Duct segments shall incorporate UV stable 1,000 micron high impact resistant titanium infused vinyl that is introduced during the manufacturing process.

H. Outdoor Cladding Color: The outdoor cladding color shall be white (standard), tan, or gray, as indicated on the drawings or as specified herein.

I. Flange Coverings: Flanges shall be field sealed air-tight before flange covers are installed. Flange covering shall consist of the following:
1. Foam tape insulation with molded 39 mil covers.
2. Air gap (heating only applications) with molded 39 mil covers.

J. Reinforcement: Ducts shall be designed and constructed with adequate reinforcement to withstand internal air pressure forces and to withstand the design wind and snow loads for the specific location where the duct system is being installed.

K. Closure Materials: Employ Thermaduct 'Airtruss' reinforcement system when both specified static pressure and duct sizes dictate the need. This shall be a factory installed system such that no field installation of the reinforcement system is required.

L. Weight: Ductwork shall provide relatively low weight stresses on the building framing and support members. The assembled ductwork shall have a maximum weight of 2.7 lbs/sf (the actual weight is dependent on R-value and reinforcement requirements).

M. Supports, hangers, and tie-downs shall be as detailed in the 'Thermaduct Contractor Installation Manual' and shall be submitted and reviewed by the Engineer and the Duct Manufacturer prior to ordering and installation. The distance between hangers shall not exceed 13 feet for duct girths less than 84 inches and shall not exceed 8 feet for duct girths 85 inches and greater. Supports, hangers and tie-downs shall be designed to carry the weight of the ductwork, including snow load and wind load.

2.3 SHOP-FABRICATED EXTERIOR DUCTWORK (DELETE WHEN NOT APPLICABLE TO PROJECT)

A. Shop-fabricated exterior ductwork shall be constructed of 'sandwiched' sheet metal with Ductmate connectors and 2" thick Johns Manville 'Xspect Isofoam APF' board insulation (R-6 per inch, R-12 total) between the two layers of sheet metal. The board insulation shall consist of closed cell polyisocyanurate foam bonded to a foil face on both sides.

B. The inner duct shall be standard galvanized sheet metal duct gauge as appropriate for the associated air handling system (see Specification Section 233100 - HVAC Ductwork). The outer duct shall be .024" thick embossed aluminum, or approved equal.

C. Stuff any gaps between sheet edges with fiberglass insulation prior to covering and sealing. Cover insulation with .020" thick stucco embossed aluminum jacketing (ITW Insulation Systems Metal Jacketing with Polyfilm Moisture barrier, or approved equal). Apply Design Polymerics DP-1010 sealant over all joints/seams (apply DP-1020 at any larger gaps or voids). Apply sealants per manufacturer's written instructions.

D. Exterior ductwork shall be cross-broken as required to accomplish a minimum side-to-side slope of 1/4 inch per foot, to eliminate the possibility of standing water on the top of the duct. No screws or fasteners shall penetrate the ductwork exterior.

E. Exterior ductwork seams shall be covered with a fibrated water-based duct sealant that is UV inhibited and incorporates fiber reinforcement.

F. Available Sealant Manufacturers: Subject to compliance with requirements, manufacturers offering sealants which may be incorporated in the work include the following:
   1. Design Polymerics DP-1010
   2. Design Polymerics DP-1020
   3. Hardcast Versa-Grip 181
   4. Foster 32-17
   5. Childers CP-148

PART 3 - EXECUTION

3.1 CLEANING AND PROTECTION

A. Clean ductwork internally, unit by unit as it is installed, of any dust and debris. Clean external surfaces of foreign substances which might cause corrosive deterioration of metal or where ductwork is to be painted.

B. Strip protective paper from stainless steel ductwork surfaces, and repair finish wherever it has been damaged.

C. Temporary Closure: At ends of ducts which are not connected to equipment or air distribution devices at the time of ductwork installation, provide temporary closure using polyethylene film or other covering which will prevent entrance of dust and debris until the time that connections are to be completed.

3.2 HANGERS AND SUPPORTS

A. Support ductwork and piping in a manner complying with Section 230530 (Hangers and Supports for HVAC Piping, Ductwork, and Equipment). Where special hanging of ductwork or piping is detailed or shown on drawings, the drawings shall be followed.

3.3 OPERATION TEST

A. Test each piece of equipment to show that it will operate in accordance with the indicated requirements.

3.4 CLEANING UP

A. Upon completion of the Work remove materials, equipment, apparatus, and tools, and leave the premises clean, neat, and orderly.

END OF SECTION

SECTION 233400 - HVAC FANS AND HOODS

PART 1 - GENERAL

1.1 CONDITIONS OF THE CONTRACT

A. Sections 230000 (Heating, Ventilating, and Air Conditioning) and 230500 (Basic Materials and Methods for HVAC) are hereby made a part of this section.

1.2 WORK INCLUDED

A. Types of fans, hoods, and curbs specified in this section include the following:
   1. Ceiling Exhaust Fans
   2. Downblast Exhaust Fans
   3. Upblast Exhaust Fans
   4. In-Line Centrifugal Fans
   5. Lab Exhaust Fans
   6. Kitchen Exhaust Fans
   7. Destratification Fans
   8. Roof Mounted Intake/Relief Hoods
   9. Exhaust Hoods
   10. Pre-Fabricated Seismic Roof Curbs

1.3 SUBMITTALS

A. Refer to Section 013300 - Submittal Requirements for submittal procedures.

B. Product Data: Submit manufacturer's technical product data and installation instructions for each type of material listed in this section.

C. Operation and Maintenance Data: Submit operation and maintenance data and replacement material lists for each type of material listed in this section. Include this data and product data in the operation and maintenance manual.

PART 2 - PRODUCTS

2.1 CEILING EXHAUST FANS

A. Provide ceiling fans of type, size, and capacity as scheduled on the drawings, and as specified herein. Fans shall be Greenheck CSP-A, Greenheck SP-AP, or approved equal, with factory furnished speed control.

B. Fans shall be tested and rated in accordance with ASHRAE Standards. Provide with AMCA Certified Ratings Seal for both air flow and sound.

C. Motor Type: Provide open drip-proof (ODP) motor for Greenheck Model CSP-A. Motor shall be permanently lubricated sleeve bearing type, mounted on vibration isolators, suitable for speed control. Provide electrically commutated (EC) motor for Greenheck Model SP-AP with factory furnished speed control.

D. Electrical: Provide factory-wired non-fusible type disconnect switch at motor in fan housing. Provide thermal overload protection in fan motor. Provide conduit chase within unit for electrical connection.

E. Available Manufacturers: Subject to compliance with requirements, manufacturers offering ceiling exhaust fans which may be incorporated in the work include the following, or approved equal:
   1. Greenheck
   2. PennBarry
   3. Cook

2.2 UPBLAST EXHAUST FANS

A. Provide upblast exhaust fans, curb mounted, of type, size, and capacity as scheduled on the drawings, and as specified herein. Fans shall be Greenheck CUE, or approved equal.

B. Ratings: Test and rate fans in accordance with ASHRAE Standards. Provide with AMCA Certified Ratings Seal for both air flow and sound.

C. Type: Upblast type, direct drive, or belt drive as scheduled. Provide capacitor-start, induction-run type motor for belt drive fans.

D. Electrical: Provide factory-wired non-fusible type disconnect switch at motor in fan housing. Provide thermal overload protection in fan motor. Provide conduit chase within unit for electrical connection.

E. Available Manufacturers: Subject to compliance with requirements, manufacturers offering kitchen exhaust fans which may be incorporated in the work include the following, or approved equal:
   1. Greenheck
   2. PennBarry
   3. Cook

2.3 IN-LINE CENTRIFUGAL FANS

A. Provide direct drive in-line fans of sizes and arrangement as indicated, and of capacities and having accessories as scheduled. Fans shall be Greenheck SQ, or approved equal.

B. Ratings: Test and rate fans in accordance with ASHRAE Standards. Provide with AMCA Certified Ratings Seal for both air flow and sound.

C. Fan Units: Provide factory-assembled and tested fan units consisting of housing, wheel, fan shaft, bearings, and fan drive. Clean, condition, and prime paint sheet metal parts prior to final assembly. Apply final coat of enamel to exterior surfaces after assembly.

D. Wheels: Balance wheels statically and dynamically near operating speed.

E. Backdraft Damper: Provide a factory-furnished, field-installed backdraft damper at each in-line exhaust fan.

F. Bearings: Provide sealed, pillow block type bearings, selected for a minimum average life of 200,000 hours.

G. Motors: Provide open drip-proof motors with ball or sleeve bearings. Provide split phase or capacitor start motors for fractional horsepower, with resilient base. Provide induction motors for integral horsepower, with rigid base. Provide non-fusible type disconnect switch for all 120

volt fans. Where scheduled, provide Greenheck Vari-Green EC motor with factory furnished speed control.

H. Drives: Where scheduled provide V-belt drives selected for a 1.5 service factor. Provide adjustable pitch sheave selected for midpoint at design conditions.

I. Available Manufacturers: Subject to compliance with requirements, manufacturers offering in-line centrifugal fans which may be incorporated in the work include the following, or approved equal:
   1. Greenheck
   2. PennBarry
   3. Cook

2.4 DOWNBLAST EXHAUST FANS

A. Provide downblast exhaust fans, curb mounted, of type, size, and capacity as scheduled on the drawings, and as specified herein. Fans shall be Greenheck G Series, or approved equal.

B. Ratings: Test and rate fans in accordance with ASHRAE Standards. Provide with AMCA Certified Ratings Seal for both air flow and sound.

C. Type: Downblast type, direct drive, or belt drive as scheduled. Provide capacitor-start, induction-run type motor for belt drive fans.

D. Electrical: Provide factory-wired non-fusible type disconnect switch at motor in fan housing. Provide thermal overload protection in fan motor. Provide conduit chase within unit for electrical connection.

E. Available Manufacturers: Subject to compliance with requirements, manufacturers offering kitchen exhaust fans which may be incorporated in the work include the following, or approved equal:
   1. Greenheck
   2. PennBarry
   3. Cook

2.5 LAB EXHAUST FANS

A. General: Provide centrifugal up-blast type fans, direct drive or belt drive as scheduled, of type, size, and capacity scheduled on the drawings, and as specified herein. Fans shall be Greenheck Model FJI, or approved equal.

B. Ratings: Test and rate fans in accordance with ASHRAE standards. Provide with AMCA Certified Rating Seal for air flow and sound.

C. Electrical: Provide a factory-wired non-fusible type disconnect switch at the motor in the fan housing and thermal overload protection for the fan motor. Provide conduit chase in unit for electrical connection.

D. Base fan performance at standard conditions (.075 lbs/ft3 air density).

E. Fans selected shall be capable of accommodating static pressure and flow variations of +/-15% of the scheduled values.

F. Each fan shall be direct drive in AMCA Arrangement 4 in accordance with the drawings. Provide capacitor-start, induction-run type motor for belt drive fans.

G. Fans are to be equipped with lifting lugs.

H. After fabrication, all carbon steel components shall be cleaned and chemically treated by a phosphatizing process to insure proper removal of grease, oil, scale, etc. Fan shall then be coated with a minimum of 3 mils of Polyester Urethane, electrostatically applied and baked. Finish color shall be concrete grey. Coating must exceed 1,000 hour salt spray under the ASTM B117 test method.

I. When properly anchored to the roof structure, the standard fan/stack assembly shall withstand wind loads of up to the equivalent load of 115 mph wind speed, without the need for guy wires or additional structural support.

J. Fan housing is to be aerodynamically designed with high efficiency inlet, engineered to reduce incoming air turbulence.

K. The housings on all fan sizes shall be of continuously welded heavy gauge steel. Panels shall be coated with a minimum of 3 mils of polyester urethane, electrostatically applied and baked. Finish color shall be concrete grey. No uncoated metal fan parts will be allowed.

L. Partial wheel and housing widths shall be used to attain the fan performance requirements.

M. Fan wheel shall be directly coupled to the motor shaft.

N. Housing and bearing support shall be constructed of welded structural steel members to prevent vibration and rigidly support the shaft and bearings.

O. Housing shall include discharge stack of same material as fan housing to increase the overall discharge height of the unit. Minimum overall unit height with stack to be 7/10/15 feet from the roof deck.

P. Stack material shall be a minimum of 18 gauge. Stack to match outlet dimensions of the fan and shall not add additional static pressure drop to the exhaust fan. Stack discharge shall have tapered design increasing exit velocity and not adding additional static pressure drop to the exhaust fan.

Q. No discharge rain caps or flapper caps are permitted as to interfere with exhaust airflow.

R. Threaded drain connection with plug shall be located at lowest part of scroll housing to prevent moisture build-up in the interior of fan.

S. Fan shall be provided with integral inlet box and curb cap constructed of same material and coated to match fan housing, with access panel for inspection of fan wheel and duct.

T. Units with integral inlet box shall be provided with a matching roof curb. Roof curb shall be constructed of 14 gauge galvanized steel, include one inch of insulation and be provided with adjustable duct support bar for connecting building duct to roof curb. Roof curb shall be Greenheck Model GPFHL or approved equal.

U. Units with integral inlet box shall be provided with a gravity backdraft damper to prevent airflow back into the building when the exhaust fan is not in operation. Damper sized to match inlet area of inlet box and mounted in the roof curb. Backdraft damper shall be constructed with aluminum

frame, extruded aluminum blades and vinyl seals on closing edge. Damper shall be equivalent to Greenheck model EM-10.

V. The fan wheel shall be of the non-overloading backward inclined centrifugal type. Wheels shall be statically and dynamically balanced to balance grade G6.3 per ANSI S2.19.

W. Fan wheel shall be manufactured with continuously welded steel blades and coated with a minimum of 3 mils of polyester urethane, electrostatically applied and baked. Finish color shall be concrete grey.

X. The wheel cone and fan inlet cone shall be carefully matched and shall have precise running tolerances for maximum performance and operating efficiency.

Y. Motors shall meet or exceed Energy Independence and Security Act (EISA) efficiencies. Motors to be NEMA T-Frame, 690, 870, 1170, 1770 or 3500 RPM at 60 Hz, Open Drip-Proof (ODP) or Totally Enclosed Fan-Cooled (TEFC) with a 1.15 service factor.

Z. Available Manufacturers: Subject to compliance with requirements, manufacturers offering lab exhaust fans which may be incorporated in the work include the following, or approved equal:
   1. Greenheck
   2. PennBarry
   3. Cook

2.6 KITCHEN EXHAUST FANS

A. General: Provide centrifugal type fans, curb mounted, of type, size, and capacity as scheduled on the drawings, and as specified herein. Fans shall be Greenheck Cube, or approved equal.

B. Ratings: Test and rate fans in accordance with ASHRAE standards. Provide with AMCA Certified Rating Seal for air flow and sound.

C. Type: Centrifugal fan, up-blast type, direct drive or belt drive as scheduled. Provide capacitor-start, induction-run type motor for belt drive fans.

D. Electrical: Provide a factory-wired non-fusible type disconnect switch at the motor in the fan housing. Provide thermal overload protection in fan motor. Provide conduit chase within unit for electrical connection.

E. Provide grease hood exhaust fans with ventilated curbs, grease trough and drain fittings, and other accessories as required by code. Curb height shall be as indicated on the drawings and shall accommodate the roof slope. Curb shall be hinged style, suitable for cleaning the lower housing, fan impeller, and ductwork.

F. Available Manufacturers: Subject to compliance with requirements, manufacturers offering kitchen exhaust fans which may be incorporated in the work include the following, or approved equal:
   1. Greenheck
   2. PennBarry
   3. Cook
   4. CaptiveAire

2.7 DESTRATIFICATION FANS (HIGH VOLUME LOW SPEED FANS)

A. Provide high volume low speed fans of type, size, and capacity as scheduled on the drawings, and as specified herein. Fans shall be Big Ass Fan Powerfoil 8, or approved equal. Furnish with standard controller and BACnet interface card.

B. Available Manufacturers: Subject to compliance with requirements, manufacturers offering high volume low speed fans which may be incorporated in the work include the following, or approved equal:
   1. Big Ass Fans
   2. Greenheck
   3. Cook

2.8 ROOF MOUNTED INTAKE AND RELIEF HOODS

A. Provide hoods, curb mounted, of size noted on drawings and as specified herein. Hood style and manufacturer shall match the centrifugal roof exhaust fans. Intake hoods shall be Greenheck Model GRSI, or approved equal. Relief hoods shall be Greenheck Model GRSR with backdraft damper, or approved equal.

B. Bird Screens: Provide removable bird screens, 1/2” mesh 16 gauge aluminum or brass wire.

C. Provide backdraft damper in the neck of each relief air hood (not required on hoods serving inline fans that are equipped with integral backdraft dampers).

D. Available Manufacturers: Subject to compliance with requirements, manufacturers offering intake and relief hoods which may be incorporated in the work include the following, or approved equal:
   1. Greenheck
   2. PennBarry
   3. Cook

2.9 EXHAUST HOODS

A. Hoods shall be constructed of a minimum of 18 gauge 400 series stainless steel. Hoods shall be constructed using the standing seam method for optimum strength and with a Performance Enhancing Lip (PEL) to improve capture efficiency by turning air back into the hood. All seams, joints, and penetrations of the hood enclosure shall be welded and/or liquid tight. Lighter material gauges, alternate material types, and alternate finishes are not acceptable.

B. Provide vapor-proof, UL listed LED light fixtures (restrictions may apply) which shall be pre-wired to a junction box situated at the top of the hood for field connection. Wiring shall conform to the requirements of NFPA 70.

C. Canopy hoods shall be built in accordance with the NFPA 96, the UMC, and shall bear the NSF Seal of Approval.

D. Available manufacturers: Subject to compliance with requirements, manufacturers offering exhaust hoods which may be incorporated in the work include the following, or approved equal:
   1. Greenheck
   2. PennBarry
   3. Accurex

4. CaptiveAire

2.10 PRE-FABRICATED SEISMIC ROOF CURBS

A. See Specification Section 230500 (Basic Materials and Methods for HVAC).

PART 3 - EXECUTION

3.1 GENERAL

A. Install fans and ventilators where indicated, in accordance with equipment manufacturer's installation instructions, and with recognized industry practices, to ensure that equipment complies with requirements and serves intended purposes.

B. Provide motors so that they cannot be overloaded above nameplate rating throughout the full speed range of the adjustable pitch driving sheave.

C. Fan wheels shall be balanced statically and dynamically near operating speed.

D. Provide drives and guards conforming to the requirements hereinbefore specified.

E. Fan construction, speed, noise level, tip speeds, outlet velocities, and efficiencies will be taken into consideration in assessment of all fans that are submitted.

3.2 ROOF CURBS

A. Furnish roof curbs to the roofing installer for installation.

3.3 ELECTRICAL CONNECTIONS

A. Ensure air distribution equipment is wired properly, with rotation in direction indicated and intended for proper performance.

3.4 CARE AND CLEANING

A. Repair or replace broken, damaged or otherwise defective parts, materials, and work. Leave entire work in condition satisfactory to Owner’s representative. At completion, carefully clean and adjust equipment and trim installed as part of this work. Leave systems and equipment in a satisfactory operating condition.

3.5 OPERATION TEST

A. Test each piece of equipment to show that it will operate in accordance with the indicated requirements.

3.6 CLEANING UP

A. Upon completion of the Work remove materials, equipment, apparatus, tools, and the like and leave the premises clean, neat and orderly.

END OF SECTION

SECTION 233700 - AIR OUTLETS AND INLETS

PART 1 - GENERAL

1.1 CONDITIONS OF THE CONTRACT

A. Sections 230000 (Heating, Ventilating, and Air Conditioning) and 230500 (Basic Materials and Methods for HVAC) are hereby made a part of this section.

1.2 WORK INCLUDED:

A. This section includes specifications and requirements for air outlets and inlets.

1.3 QUALITY ASSURANCE

A. SMACNA Compliance: Comply with applicable portions of Sheet Metal and Air Conditioning Contractor's National Association (SMACNA) HVAC Duct Construction Standards (Metal and Flexible), latest edition, for all work in this section.

B. ASHRAE Standards: Comply with American Society of Heating, Refrigerating, and Air Conditioning Engineers (ASHRAE) recommendations, latest edition, for all work in this section.

C. NFPA Compliance: Comply with ANSI/NFPA 90A 'Standard for the Installation of Air Conditioning and Ventilating Systems', and ANSI/NFPA 90B 'Standard for the Installation of Warm Air Heating and Air Conditioning Systems'.

1.4 SUBMITTALS

A. Refer to Section 013300 - Submittal Requirements for submittal procedures.

B. Product Data: Submit manufacturer's product data for each type of ductwork accessory, including dimensions, capacities, and materials of construction, and installation instructions.

PART 2 - PRODUCTS

2.1 AIR OUTLETS AND INLETS

A. See air distribution schedule on the drawings for outlet and inlet types.

B. Grilles, registers, and diffusers shall be selected and guaranteed by the manufacturer to operate without objectionable noise or draft.

C. Furnish and install sponge rubber gaskets between grilles and grounds of finished surfaces. Wood grounds will be furnished by others. Metal grounds shall be furnished by the Contractor. Sidewall grilles and registers shall be provided with a dull/flat prime coat finish, unless noted otherwise. All supply diffusers, registers, and grilles located at ceilings shall have factory-applied bone white finish, unless indicated otherwise on the drawings.

D. Paint visible ductwork behind grilles, registers, and diffusers flat black.

E. General: Except as otherwise indicated, provide manufacturer's standard ceiling air diffusers where shown of size, shape, capacity, and type indicated; constructed of materials and components as indicated and as required for a complete installation. Provide diffusers with border styles that are compatible with adjacent ceiling systems and that are specifically manufactured to fit into ceiling modules with accurate fit and adequate support. Refer to the

architectural drawings and specifications for types of ceiling systems which will contain each type of ceiling air diffuser and/or grille.

F. Allowable Manufacturers: Subject to compliance with requirements, manufacturers offering air outlets and inlets which may be incorporated in the work include the following:
   1. Price
   2. Krueger
   3. Titus

PART 3 - EXECUTION

3.1 INSTALLATION OF AIR OUTLETS AND INLETS

A. Install outlets and inlets in accordance with manufacturer's written instructions and in accordance with recognized industry practices to ensure that products serve intended functions.

B. Locate ceiling air diffusers, registers, and grilles as indicated on reflected ceiling plans. Unless otherwise indicated, locate units in the center of acoustical ceiling modules.

C. Examine areas and conditions under which outlets and inlets are to be installed. Do not proceed with work until unsatisfactory conditions have been corrected.

D. Ceiling mounted air terminals or services shall be positively attached to the ceiling suspension main runners or to cross runners with the same carrying capacity as the main runners.

E. Air terminals or services weighing not more than 56 pounds shall have two 12 gauge hangers connected from the air terminal or service to the structure above. These wires may be slack.

F. Air terminals or services weighing more than 56 pounds shall be supported directly from the structure above using submitted and approved hangers.

3.2 CARE AND CLEANING

A. Repair or replace broken, damaged, or otherwise defective parts, materials, and work. Leave entire work in condition satisfactory to Architect/Engineer. At completion, carefully clean and adjust equipment, fixtures, and trim installed as part of this work. Leave systems and equipment in a satisfactory operating condition.

3.3 OPERATION TEST

A. Test each piece of equipment to show that it will operate in accordance with the indicated requirements.

3.4 CLEANING UP

A. Upon completion of the Work remove materials, equipment, apparatus, tools, and the like, and leave the premises clean, neat, and orderly.

END OF SECTION

SECTION 238300 - ROOFTOP PACKAGED GAS-ELECTRIC UNITS (3-10 TONS)

PART 1 - GENERAL

1.1 CONDITIONS OF THE CONTRACT

A. Sections 230000 (Heating, Ventilating, and Air Conditioning) and 230500 (Basic Materials and Methods for HVAC) are hereby made a part of this section.

1.2 WORK INCLUDED

A. Types of units specified in this section include the following:
   1. Rooftop Packaged Gas-Electric Units (3-10 Tons)

1.3 QUALITY ASSURANCE:

A. NFPA 90 A & B (Installation of Air Conditioning and Ventilation Systems and Installation of Warm Air Heating and Air Conditioning Systems).

B. ANSI/ASHRAE 15 (Safety Code for Mechanical Refrigeration).

C. AHRI 360 (Commercial and Industrial Unitary Air Conditioning Equipment Testing and Rating).

D. AHRI 340 (Commercial and Industrial Unitary Heat Pump Equipment).

E. ANSI/ASHRAE 37 (Testing Unitary Air Conditioning and Heat Pump Equipment).

F. ANSI/ASHRAE/IESNA (Energy Standard for New Buildings Except Low-Rise Residential).

G. ANSI Z21.47/UL (Unitary Air Conditioning Standard for Safety Requirements).

H. AHRI 210/240 (Unitary Air Conditioning Equipment and Air Source Heat Pump Equipment).

I. AHRI 270 - Sound Rating of Outdoor Unitary Equipment.

J. AHRI 370 - Sound Rating of Large Outdoor Refrigerating and Air Conditioning Equipment.

K. ANSI/NFPA 70 (National Electrical Code - Standard 410 (Forced Circulation Air Cooling and Air Heating Coils).

1.4 SUBMITTALS

A. Refer to Section 013300 - Submittal Requirements for submittal procedures.

B. Submit unit performance data including capacity, nominal and operating performance.

C. Submit mechanical specifications for each unit and accessories describing construction, components, and options.

D. Submit shop drawings indicating overall dimensions as well as installation, operation, and service clearances. Indicate lift points and recommendations and center of gravity. Indicate unit shipping, installation and operating weights including dimensions.

E. Submit data on electrical requirements and connection points. Include recommended wire and fuse sizes or MCA, sequence of operation, safety, and start-up instructions.

F. Shop drawings submitted for approval shall be accompanied by a copy of the purchase agreement between the Contractor and an authorized service representative of the manufacturer for checkout, testing, startup, and first year service.

1.5 DELIVERY, STORAGE, AND HANDLING

A. Comply with manufacturer's installation instructions for rigging, unloading, and transporting the units.

B. Protect units from physical damage. Leave factory shipping covers in place until installation.

1.6 WARRANTY

A. Provide parts warranty (excluding refrigerant) for one year from start-up or 18 months from shipment, whichever occurs first.

B. Required Option: Provide a five year extended parts warranty for compressors.

C. Required Option: Provide a ten year extended parts warranty for the heat exchanger.

1.7 SPARE PARTS

A. Provide 4 sets of spare filters for each unit.

PART 2 - PRODUCTS

2.1 PACKAGED GAS-ELECTRIC UNITS

A. General
   1. Available Manufacturers: Subject to compliance with requirements, manufacturers offering packaged gas-electric units which may be incorporated in the work include the following:
      a. Trane Precedent Series (Minimum 15.0 SEER)
      b. York Predator ZJ Series (Minimum 15.0 SEER)
      c. Lennox LRP 16 Series (Minimum 16.0 SEER)
   2. The Contractor shall furnish and install packaged rooftop units as shown and scheduled on the drawings and as specified herein. The units shall be installed in accordance with this specification and shall perform at the specified conditions as scheduled on the drawings.
   3. The units furnished and installed shall be packaged rooftop type as scheduled on the drawings. Cooling capacity ratings shall be based on AHRI Standards. Units shall consist of and insulated weather-tight casing with compressor(s), air-cooled condenser coil, condenser fans, evaporator coil, return air filters, supply motors, and unit controls.
   4. Units shall be 100% factory run-tested and fully charged with R-410A.
   5. Units shall have labels, decals, and/or tags to aid in the service of the unit and to indicate caution areas.
   6. Units shall be convertible airflow design as manufactured.
   7. Wiring internal to the unit shall be colored and numbered for identification.

B. Unit Casing
   1. Cabinet: Galvanized steel, phosphatized, and finished with a pre-applied baked polyurethane enamel. Structural members with access doors and removable panels shall be minimum 22 gauge.
   2. Cabinet surface shall be tested 672 hours in salt spray test complying with ASTM B117.

3. Cabinet construction shall allow for all service/maintenance from one side of the unit.
4. Cabinet top cover shall be one piece construction or where seams exist they shall be double-hemmed and gasket-sealed.
5. Access Panels: Water and air-tight panels with handles shall provide access to filters, heating section, return air fan section, supply air fan section, evaporator coil section, and unit control section.
6. Unit base pan shall have a raised 1-1/8 inch lip around the supply and return openings for water integrity.
7. Provide 1/2 inch foil faced, fire retardant, permanent, odorless, fiberglass insulation. All edges shall be captured so that there is no insulation exposed in the air stream.
8. The base pan shall have no penetrations within the perimeter of the curb other that the raised 1-1/8 inch high downflow supply/return openings to provide added water integrity protection.
9. Provide openings either on the side of the unit or through the base for power, control, condensate, and gas connections (see drawings for specific requirements).
10. The base of the unit shall have 3 sides for forklift provisions. The base of the unit shall have rigging/lifting holes for crane maneuvering.

C. Air Filters
1. Required Option (2 Inch Filter Rack). Factory installed filters shall mount integral within the unit and shall be accessible through access panels. Filter rack and filters shall be two inch thick in sizes as indicated on the drawings.

D. Fans and Motors
1. Provide evaporator fan section with forward curved, double width, double inlet, centrifugal type fan.
2. Provide self-aligning, grease lubricated, ball or sleeve bearings with permanent lubrication fittings.
3. All 6 ton thru 10 ton units shall be high efficiency type and shall be equipped with a direct drive plenum fan design. The plenum fan design shall include a backward curved fan wheel along with an external rotor direct drive variable speed indoor motor. All plenum fan units shall have a variable speed adjustment potentiometer located in the control box.
4. All 3 thru 10 ton units shall be high efficiency type and shall have multi-speed, direct drive motors (or variable speed direct drive motors when scheduled or applicable). All indoor fan motors shall meet the U.S. Energy Policy Act of 1992 (EPACT).
5. Outdoor and indoor fan motors shall be permanently lubricated and shall have internal thermal overload protection.
6. Outdoor fans (condenser fans) shall be direct drive, statically and dynamically balanced, draw-through, vertical discharge.
7. Provide shafts constructed of solid hot rolled steel, ground and polished, with key-way, and protectively coated with lubricating oil.

E. Gas Fired Heating Section
1. Completely assembled and factory installed heating system shall be integral to unit, UL or CSA approved specifically for outdoor applications for use downstream from refrigerant cooling coils. Threaded connection with plug or cap provided. Provide capability for connection of gas piping.
2. The heating section shall be factory run tested prior to shipment.

3. Induced draft combustion type with direct spark ignition system, redundant main gas valve. Two stage heat shall be provided on all 6 thru 10 ton units.
4. Gas Burner Safety Controls: Provide safety controls for the proving of combustion air prior to ignition, and continuous flame supervision. Provide flame rollout switches.
5. Induced draft blower shall have combustion air proving switches and built-in thermal overload protection on fan motor.
6. Units shall be suitable for use with natural gas or propane (field-installed kit). On projects located in California comply with California requirements for low NOx emissions.
7. Heat Exchanger: Provide a tubular section type heat exchanger constructed of 18 gauge aluminized steel.
8. Required Option (Through-the-Base Gas Piping). The gas piping on the unit shall include a standard through-the-base gas provision whenever available from the manufacturer. This option shall have all piping necessary including black steel, manual gas shutoff valve, elbows, and union. The manual shutoff valve shall include a 1/8 inch pressure tap.
9. Burners: Burners shall be of the in-shot type constructed of stainless steel.
10. Limit controls: High temperature limit controls shall shut off gas flow in the event of excessive temperatures resulting from restricted indoor airflow or loss of indoor airflow.

F. Evaporator Section
1. Provide configured aluminum fin surface mechanically bonded to copper tubing coil.
2. Microchannel evaporators shall have streamlined tubes with small ports, and a metallurgical tube-to-fin bond. The compact all-aluminum microchannel coils are intended to reduce the unit weight. The all-aluminum coil shall be recyclable and is also intended to minimize galvanic corrosion. The strong aluminum brazed structure provides better fin protection. The flat streamlined tubes make microchannel coils more dust resistant and also easier to clean.
3. Provide an independent expansion device for each refrigeration circuit, factory pressure tested at 600 psi and leak tested at 465 psi.
4. The unit shall include a condensate overflow switch to shut the unit down in the event that a clogged condensate drain line prevents proper condensate removal from the unit.
5. Provide a removable, reversible, cleanable, double-sloped drain pan for the base of the evaporator coil constructed of PVC.
6. Required Option (Stainless Steel Drain Pan). Provide a removable, reversible, cleanable double sloped drain pan for base of evaporator coil constructed of stainless steel.

G. Condenser Section
1. Provide vertical discharge, direct drive fans with aluminum blades. Fans shall be statically balanced. Motors shall be permanently lubricated, with integral thermal overload protection in a weather-tight casing.
2. The microchannel coil shall have flat streamlined tubes with small ports, and metallurgical tube to fin bond. The microchannel condenser coil shall be capable of reducing system refrigerant charge by up to 50% because of smaller internal volume, which also reduces the unit weight. The all-aluminum coil shall be recyclable and is also intended to minimize galvanic corrosion. The strong aluminum brazed structure provides better fin protection. The flat streamlined tubes make microchannel coils more dust resistant and also easier to clean.
3. A microchannel condenser coil shall be provided on all units 4 thru 10 tons.
4. A tube and fin condenser coil shall be provided on all 3 ton units.
5. When Trane 17 Plus series units are scheduled on the drawings the units shall include tube and fin condenser coils.

6. Provide toolless factory-installed corrosion resistant louvered hail/vandalism guards to protect condenser coils from hail and/or physical damage.

H. Refrigeration Section
1. All units shall have direct drive hermetic, scroll type compressors with centrifugal type oil pumps. The compressor motor shall be suction gas cooled and shall have a voltage utilization range of plus or minus 10 percent of the unit nameplate.
2. When Trane 17 Plus series units are scheduled on the drawings the units shall include 2-stage scroll type compressors with centrifugal type oil pumps. The compressor motor shall be suction gas cooled and shall have a voltage utilization range of plus or minus 10 percent of the unit nameplate rating.
3. Provide thermostatic temperature motor winding control for protection against excessive temperatures caused by over/under voltage operation or loss of refrigerant charge. Also provide high and low pressure switches.
4. Thermal expansion valves shall be standard on all models.
5. All units shall have cooling capabilities down to 40°F as standard when electromechanical controls are specified. All units shall have cooling capabilities down to 0°F as standard when the optional microprocessor controls are specified.
6. The unit manufacturer shall provide a factory authorized service technician that will ensure proper installation and operation of the field-installed low ambient accessory.
7. Units 3 thru 5 tons shall include one compressor and one refrigerant circuit. Refrigerant circuits shall be completely piped with a liquid line filter-drier and with suction and liquid line pressure ports.
8. Units 6 thru 10 tons shall include two compressors and two refrigerant circuits. Each refrigerant circuit shall be completely piped with a liquid line filter-drier and with suction and liquid line pressure ports

I. Exhaust/Return Section (edit as appropriate for each project)
1. Provide barometric relief gravity type dampers that shall operate in conjunction with the economizer to provide exhaust.
2. On downflow units provide a factory-supplied, field-installed power exhaust assembly that shall assist the barometric relief damper in the economizer section to relieve excess building pressurization.
3. When scheduled, provide supply air and/or return air smoke detector. If smoke is detected all unit operation shall be shut down. Reset shall be manual at the unit.

J. Outdoor Air Section (edit as appropriate for each project)
1. Provide a manual outside air damper for 0 to 50% of the total supply air flow.
2. Provide a motorized outside air damper for 0 to 50% of the total supply air flow.
3. Provide an outside air economizer section with barometric relief.
4. Provide an outside air economizer section with barometric relief and power exhaust.
5. The economizer section shall be provided with low leak airfoil blade dampers. Dampers shall have a maximum leakage rate of 3 cfm/sf a 1.0” w.c.
6. Provide an adjustable minimum damper position control located in the economizer section of the unit.
7. Provide a spring return motor for the outside air damper for damper closure during unit shutdown or power interruption.
8. Provide a remote potentiometer for the minimum position setting of the economizer outside air damper.

K. Electro-Mechanical Unit Controls (edit as appropriate for each project)
   1. Provide factory-wired rooftop units with a 24 volt electro-mechanical control circuit, control transformers, and contactors, pressure lugs, or terminal block for power wiring. All units shall have single-point power connection.

L. Direct Digital Unit Controls (edit as appropriate for each project)
   1. A BACnet control module to allow interface with the building energy management system shall be furnished and mounted by the rooftop unit manufacturer. Through the interface module all energy management functions shall be performed. The interface module with necessary controls and sensors shall all be factory-mounted (not field-mounted). The only field connection to the building energy management system shall be a single communication link.
   2. Control Functions: Include unit scheduling, occupied/unoccupied mode, startup and coast-down modes, nighttime free cooling purge mode, demand limiting, night setback, discharge air setpoint adjustment, timed override, and alarm shutdown capabilities.
   3. Diagnostic Functions: Diagnostic function capability shall be available for unit operating mode, unit failure status, cooling failure status, heating failure, emergency service stop indication, supply fan proving, timed override activation, high temperature thermostat status, zone temperature, supply air temperature, cooling status, stage activation, stage lockout status for each stage, compressor disable inputs, number of stages activated, high temperature limit status, economizer status, enthalpy favorability status, requested minimum damper position, damper position, dry bulb temperature, enthalpy input status, outside air temperature, and outside relative humidity.
   4. Sensor failure: Failure sensing capability shall be available for the humidity sensor, outside air temperature sensor, supply air temperature sensor, return air temperature sensor, zone temperature sensor, mode input, cooling/heating setpoints from sensors, static pressure transducer, unit-mounted potentiometer, supply air temperature from potentiometer, high temperature input status, local setpoint, and local mode failure.
   5. Provide capabilities for Boolean Processing and trend logs as well as template reports and logs.

M. Roof Curb
   1. The Contractor shall provide a factory supplied roof curb, 16 gauge perimeter made of zinc coated steel, with supply and return air gasketing and wood nailer strips. The curb shall be shipped knocked down and provided with instructions for assembly.
   2. The curb shall be manufactured in accordance with the guidelines of the National Roofing Contractors Association.

PART 3 - EXECUTION

3.1 FACTORY START-UP

A. Provide factory start-up by a certified factory trained technician. Provide start-up certification for each rooftop unit ensuring proper installation and operation.

3.2 INSTALLATION

A. The Contractor shall install units in accordance with the manufacturer's instructions.

B. Units shall be mounted on a factory-built roof mounting frame providing a water-tight enclosure to protect all ductwork and utility services. Install the roof curb level in all directions.

3.3 CARE AND CLEANING

A. Repair or replace broken, damaged, or otherwise defective parts, materials, and work. Leave entire work in condition satisfactory to Architect/Engineer. At completion, carefully clean and adjust equipment, fixtures, and trim installed as part of this work. Leave systems and equipment in a satisfactory operating condition.

3.4 OPERATION TEST

A. Test each piece of equipment to show that it will operate in accordance with the indicated requirements.

3.5 CLEANING UP

A. Upon completion of the Work remove materials, equipment, apparatus, tools, and the like, and leave the premises clean, neat, and orderly.

END OF SECTION

SECTION 238600 - SPLIT SYSTEM AIR CONDITIONING UNITS

PART 1 - GENERAL

1.1 CONDITIONS OF THE CONTRACT

A. Sections 230000 (Heating, Ventilating, and Air Conditioning) and 230500 (Basic Materials and Methods for HVAC) are hereby made a part of this section.

1.2 WORK INCLUDED

A. Types of units specified in this section include the following:
   1. Split System Air Conditioning Units

1.3 EXTRA MATERIALS

A. Furnish extra materials described below that match products installed, are packaged with protective covering for storage, and identified with labels describing contents.
   1. Three sets of spare filters for each unit.
   2. One set of spare fan belts.

1.4 QUALITY ASSURANCE

A. ARI Compliance: Coil ratings shall be in conformance with the requirements of ARI Standard 410 (Forced-Circulation Air-Cooling and Air-Heating Coils).

1.5 SUBMITTALS

A. Refer to Section 013300 - Submittal Requirements for submittal procedures.

B. Product Data: Submit manufacturer's technical product data and installation instructions for each type of equipment and material listed in this section.

PART 2 - PRODUCTS

2.1 SPLIT SYSTEM AIR CONDITIONING UNITS

A. Provide mini-split air conditioning units having capacities, efficiencies, cabinet sizes, electrical characteristics, and accessories as scheduled on the drawings. The unit chassis shall contain the coil, control board, fan wheels, fan housings, motors, drain pan, and insulation.

B. Each indoor unit shall be furnished with a touchscreen thermostat/controller. Units shall also be furnished with a BACnet MS/TP interface capability and/or a condensate pump when scheduled on the drawings.

C. The indoor unit shall be securely mounted to the wall per the manufacturer’s written instructions. In cases where the wall framing is not suitably aligned for support, the contractor shall provide Unistrut channels that are adequately attached to the wall framing.

D. Available Manufacturers: Subject to compliance with requirements, manufacturers offering fan coil units which may be incorporated in the work include the following, or approved equal:
   1. Mitsubishi
   2. LG
   3. Samsung

4. Daikin

PART 3 - EXECUTION

3.1 INSPECTION

A. Examine areas and conditions under which units are to be installed. Do not proceed with work until unsatisfactory conditions have been corrected in manner acceptable to Contractor.

3.2 ELECTRICAL WIRING

A. Install electrical devices furnished by the manufacturer but not specified to be factory mounted. Furnish a copy of the manufacturer's wiring diagram to the electrical contractor.

B. Route electrical power and control wiring in separate conduits.

3.3 CARE AND CLEANING

A. Repair or replace broken, damaged, or otherwise defective parts, materials, and work. Leave entire work in condition satisfactory to Architect. At completion, carefully clean and adjust equipment, fixtures, and trim installed as part of this work. Leave systems and equipment in a satisfactory operating condition.

3.4 OPERATION TEST

A. Test each piece of equipment to show that it will operate in accordance with the indicated requirements.

3.5 CLEANING UP

A. Upon completion of the Work remove materials, equipment, apparatus, tools, and the like, and leave the premises clean, neat, and orderly.

END OF SECTION

SECTION 238900 - ELECTRIC HEATERS

PART 1 - GENERAL

1.1 CONDITIONS OF THE CONTRACT

A. Sections 230000 (Heating, Ventilating, and Air Conditioning) and 230500 (Basic Materials and Methods for HVAC) are hereby made a part of this section.

1.2 WORK INCLUDED

A. Types of units specified in this section include the following:
   1. Electric Wall Heaters
   2. Electric Unit Heaters

1.3 SUBMITTALS

A. Refer to Section 013300 - Submittal Requirements for submittal procedures.

B. Product Data: Submit manufacturer's technical product data and installation instructions for each type of material listed in this section.

PART 2 - PRODUCTS

2.1 ELECTRIC WALL HEATERS

A. Provide electric wall heaters in locations as indicated and with capacities, style, and accessories as scheduled. Electric wall heaters shall be UL listed.

B. Cabinet: Heavy gauge galvanized steel with beige enamel finish.

C. Heating Element: Steel sheath with aluminum fins.

D. Thermostat: Built-in and adjustable between 40°F and 70°F.

E. Available Manufacturers: Subject to compliance with requirements, manufacturers offering electric wall heaters which may be incorporated in the work include the following, or equal:
   1. Q-Mark (Note: Specification is based on Q-Mark Model HT500- 500 Watts)
   2. Modine
   3. Trane

2.2 ELECTRIC UNIT HEATERS

A. Provide electric unit heaters in locations as indicated and with capacities, style, and accessories as scheduled. Electric unit heaters shall be UL listed.

B. Cabinet: Heavy gauge die-formed steel with beige enamel finish, and stainless steel louvers.

C. Fans: Constructed of aluminum, and factory balanced.

D. Motors: Provide totally enclosed motors, with built-in overload protection, and with electrical characteristics as scheduled.

E. Heating Elements: Copper clad steel sheath with aluminum fins.

F. Provide the following accessories for the unit:

1. Fan Delay: Recirculates residual heat after the heating elements are de-energized.
2. Automatic Reset Thermal Cutout: Protects heating elements from overheating.

G. Available Manufacturers: Subject to compliance with requirements, manufacturers offering electric unit heaters which may be incorporated in the work include the following, or equal:
1. Q-Mark (Note: Specification is based on Q-Mark Model MUH)
2. Modine
3. Trane

PART 3 - EXECUTION

3.1 INSPECTION

A. Examine areas and conditions under which terminal units are to be installed. Do not proceed with work until unsatisfactory conditions have been corrected in a manner acceptable to the Contractor.

3.2 ELECTRICAL WIRING

A. Install electrical devices furnished by the manufacturer but not specified to be factory mounted. Furnish a copy of the manufacturer's wiring diagram to the electrical contractor.

3.3 CARE AND CLEANING

A. Repair or replace broken, damaged, or otherwise defective parts, materials, and work. Leave entire work in condition satisfactory to Architect/Engineer. At completion, carefully clean and adjust equipment, fixtures, and trim installed as part of this work. Leave systems and equipment in a satisfactory operating condition.

3.4 OPERATION TEST

A. Test each piece of equipment to show that it will operate in accordance with the indicated requirements.

3.5 CLEANING UP

A. Upon completion of the Work remove materials, equipment, apparatus, tools, and the like, and leave the premises clean, neat, and orderly.

END OF SECTION

SECTION 260001 - ELECTRICAL GENERAL PROVISIONS

PART 1 GENERAL

1.1 RELATED DOCUMENTS

A. The Drawings and General provisions of the Contract including the "General Conditions", "Supplementary Conditions", and "General Requirements" of the Contract as written and referred to here are adopted and made part of Division 26.

B. The Contract Agreement, Bidding documents, and all Addenda issued prior to Contract Agreement execution form a part of these specifications and apply to all Contracts or Subcontracts relating to the electrical systems.

1.2 SUMMARY

A. The work under this Division shall consist of all labor, materials, equipment, services and related accessories, etc., necessary and required to complete all work as shown or inferred on the Drawings and in the Specifications (Contract Documents).

B. Provide fixed electrical equipment, except where specifically noted otherwise.

C. Provide portable electrical equipment for the complete system(s).

D. Provide equipment and/or wiring normally furnished or required for complete electrical systems but not specifically specified on the drawings and/or in specifications, as though specified by both.

E. All equipment and wiring shall be new, except where specifically shown or specified otherwise.

F. Provide flexible electrical conduit and conductors having a slack, 90-degree bend or loop in any plane between connections at all vibration isolated equipment and the first attachment to building structure or cabinets, panels or boxes mounted thereon.

1.3 WORK INCLUDED IN THIS DIVISION

A. Electrical work includes, but is not limited to
   1. Arranging and coordinating with NV Energy as shown or specified.
   2. Removal or relocation of electrical services and electrical work located on or crossing through project property, above or below grade, obstructing construction of project or conflicting with completed project or any applicable code.
   3. Alterations and additions to existing electrical systems.
   4. Provide meters, switchboards, panelboards, circuit breakers, power outlets, convenience outlets, switches, and/or other equipment forming part of system.
   5. Complete lighting system.
   6. Complete communication system (see Division 27 and 28)
   7. Connection of all appliances and equipment including Owner furnished equipment.
   8. Complete grounding system.
   9. Complete temporary facilities for construction power.
   10. Complete fire alarm system.

1.4 WORK NOT INCLUDED IN THIS DIVISION (REFER TO OTHER DIVISIONS OF THESE SPECIFICATIONS)

A. Flashing of conduits into roofs and outside walls. Inform General Contractor of number and size of roof penetrations prior to bidding.

B. Furring of building structure or finishes for conduit and equipment.

C. Finish painting of conduit and equipment except for factory applied prime or finish painting specified for equipment, fixtures, devices or materials furnished under this section.

D. Installation of motors except where specifically noted. See Division 23.

E. Control wiring for mechanical systems, except where specifically indicated to be provided by Electrical Contractor. See Division 23.

1.5 RELATED WORK SPECIFIED ELSEWHERE

A. Classification of Excavation: Division 31 – Earthwork.

B. Concrete Work: Division 03.

C. Painting: Division 09.

D. Firestopping: Division 07.

1.6 REFERENCES

NEC:	National Electrical Code (latest edition adopted by local authorities unless otherwise noted).
NFPA:	National Fire Protection Association.
OSHA:	Occupational Safety and Health Administration.
UL:	Underwriters Laboratories, Inc.
NEMA:	National Electrical Manufacturer's Association.
IEEE:	Institute of Electrical and Electronic Engineers.
ACI:	American Concrete Institute.
ADA:	American Disabilities Act.
ANSI:	American National Standards Institutes.
ASTM:	American Society for Testing Materials.
AWS:	American Welding Society.
FM:	Factory Mutual Insurance Association.
IBC:	International Building Code
IES:	Illumination Engineering Society.
ISA:	Instrument Society of America.
LPI	Lightning Protection Institute.
NACE:	National Association of Corrosion Engineers.
NETA:	International Electrical Testing Association.
UL:	Underwriters Laboratories.
NECA:	National Electrical Contractors Association
NETA:	National Electrical Testing Association.

1.7 ADOPTED CODES

A. 2018 International Building Code (IBC) Published by the International Code Council (ICC).

B. 2017 National Electrical Code (NEC) published by the National Fire Protection Association (NFPA)

C. 2018 International Fire Code (IFC) published by the International Code Council.

D. National Fire Codes (NFPA Standards) published by the National Fire Protection Association (NFPA) as referenced in the 2018 International Fire Code.

E. 2018 International Energy Conservation Code (IECC) published by the International Code Council. ASHRAE/IESNA Standard 90.1 is incorporated by reference.

F. All applicable provisions of the Nevada Revised Statutes (NRS) and the Nevada Administrative Code (NAC), including those listed below.

G. The most current regulations of the State Fire Marshal, Nevada Department of Public Safety, Carson City, Nevada (NAC Chapter 477, State Fire Marshal).

H. The most current edition of the Americans with Disabilities Act (ADA) published by the United States Department of Justice including the Americans with Disabilities Act Accessibility Guidelines (ADAAG)

I. Other codes, regulations, and standards referenced in the body of this document.

J. Local codes and ordinances do not apply to projects constructed on state-owned land, except for zoning requirements pursuant to Nevada Revised Statutes Section 278.580.

K. 2018 NNICC adopted amendments to the ICC/IFC.

1.8 DEFINITIONS

Provide:	Furnish, install, connect and test until complete.
Wire:	Furnish all necessary wiring, connect and test until complete.
Install:	Furnish, set in place, wire and test until complete.
Work:	Materials completely installed, connected, and tested until complete.
AWG:	American Wire Gage.
Equal:	Acceptable equal as determined by the Engineer.

1.9 REQUIREMENTS OF REGULATORY AGENCIES

A. Obtain and pay for all permits and inspections required for the work. Comply with all ordinances pertaining to work described herein. Pay all expenses arising from the procurement of these certificates and include in the base Contract Price.

B. Install work under this Division per drawings, specifications, latest adopted edition of the National Electrical Code, (NFPA-70) including local amendments and interpretations, Local adopted Building Codes, and any special codes having jurisdiction over specific portions of work within complete installation. In event of conflict, install work per most stringent code requirements determined by Engineer. This does not relieve the Contractor from furnishing and

installing work shown or specified which may exceed the requirements of such ordinances, laws, regulations and codes.

C. All materials, products, devices, fixtures, forms or types of construction included in this project shall meet or exceed the published requirements of National Electrical Code (NEC), American National Standards Institute (ANSI), Institute of Electrical and Electronics Engineers (IEEE) and National Electrical Manufacturers Associations (NEMA). All equipment shall bear the Underwriter's Laboratories (UL) label or equivalent from approved independent testing laboratory.

D. Arrange, pay fees for and complete work to pass required tests by agencies having authority over work. Deliver to Engineer copies of the Certificates of Inspection and approval issued by authorities and provide original copy of each certificate to Owner.

E. When required by law or regulations, the governmental agency having jurisdiction for inspections shall be given reasonable notice and opportunity to inspect the work. Any work that is enclosed or covered up before such inspection and test shall be uncovered at the Contractor's expense; after it has been inspected, the Contractor shall restore the work to its original condition at his own expense.

1.10 INSURANCE

A. The Contractor shall procure and maintain, at his expense, such insurance as required by law and/or specified in the General Conditions.

1.11 DRAWINGS AND SPECIFICATIONS

A. Drawings and specifications are complementary. Work called for by one is binding as if called for by both. Any discrepancies between drawings and specifications shall be brought to the attention of the Engineer for clarification during the bidding period. No allowance shall subsequently be made to the Contractor by reason of his failure to have brought said discrepancies to the attention of the Consultant during the bidding period or by reason of any error on the Contractor's part.

B. Drawings are schematic and diagrammatic in nature. Drawings show general run of circuits and approximate location of equipment. The contractor shall review drawings of all trades to assure coordination prior to placement of work. Right is reserved to change location of equipment and devices, and routing of conduits within 10 feet, without extra cost to Owner (prior to rough-in).

C. Use dimensions in figures, shop drawings, etc. and actual site measurements in preference to scaled dimensions. Do not scale drawings for exact sizes or locations – use dimensioned details or actual field conditions. Verify item mounting heights as required by project conditions prior to rough-in.

D. The architectural drawings shall take precedence over all other drawings in matters of dimensions. Discrepancies between different drawings or between drawings and specifications, or regulations and codes governing the installation shall be brought to the attention of the Engineer in writing for determination.

E. Layout equipment as shown on drawings as close as possible. Verify access requirements for equipment actually furnished, and adjust layout to comply with NEC 110. Right is reserved to change layout within 10 feet without additional cost (prior to rough-in).

F. All devices, light fixtures, etc. located in ceiling tiles shall be located in the center of the ceiling tile UNLESS specifically noted or approved to do otherwise.

G. The Contractor is responsible to field measure and confirm the mounting heights and location of electrical equipment with respect to counters, doorways, and other architectural, mechanical or structural work. Do not scale distances off the electrical drawings: Use actual building dimensions.

H. Execution of Contract is evidence that Contractor has examined all existing conditions, drawings and specifications related to work, and is informed to extent and character of work. Later claims for labor and materials required due to difficulties encountered, which could have been foreseen had examination been made, will not be recognized.

I. All work called for in this Section of the plans and specifications shall be performed under this Section, regardless of whether such work may also have been called for in other Section(s). Discrepancies in or conflicts among the various parts of the contract drawings shall not relieve Contractor of his obligation to perform.

J. No attempt has been made to establish the required sections or splits of equipment relative to the size of access into the space, building, etc. Contractor shall establish all said splits, sections, etc. necessary to install equipment complete without undue disassembly of equipment or demolition of building parts at site of work.

K. Charges for extra work are not allowed unless work is authorized by written order from the Owner's Representative approving charges for work.

L. Check all door swings so light switches are not located behind doors. Relocate switches as required with the Engineer's review.

1.12 SEISMIC QUALIFICATIONS & REQUIREMENTS

A. Equipment Seismic Qualification
   1. Major equipment and components shall be suitable for and certified to meet all applicable seismic requirements of the California Building Code (CBC) through zone 4 application. Guidelines for the installation consistent with these requirements shall be provided by the manufacturer and be based upon testing of representative equipment. The test response spectrum shall be based upon a 5% minimum damping factor, CBC: a peak of 2.15g's and a ZPA of 0.86g's applied at the base of the equipment. The tests shall fully envelop this response spectrum for all equipment natural frequencies up to at least 35 Hz.

B. Structural Design Requirements
   1. Include in the bid, hiring of a structural engineer, registered in the state of Nevada, to provide calculations and details for equipment pads and mounting and bracing of all major equipment. Attach equipment according to those calculations.
   2. Major equipment and components include:
      a. Conduit racks and supports.
      b. Transformers.
      c. Panelboards.
      d. Service and Distribution switchboards.
   3. Equipment anchoring and bracing shall be designed to conform to IBC 2018 and NRS 341.143.

C. See Spec Section 26 05 30 Seismic Protection for Electrical Equipment.

PART 2 PRODUCTS

2.1 MATERIALS

A. All material shall be new, and have a UL label where available. If UL label is not available, material shall be manufactured in accordance with applicable NEMA, IEEE and Federal Standards. Use UL labeled components in assemblies that do not have overall UL label. All equipment shall comply with the terms "listed and labeled" as defined in the NEC 70, Article 100. Submit letter stating compliance with these requirements.

B. Utilize one of the manufacturers listed to furnish all of the major equipment (i.e., transformers, bus duct, switchgear, circuit breakers, etc.) required for this project.

C. In all cases, there is one basis of design manufacturer or product for each item of equipment or product shown on the drawings and/or specified herein. These products are identified by name and model number on the drawings and/or in the specifications. Alternative manufacturers and products are also listed; however their inclusion as an alternative manufacturer or product does not cause them to be the basis of design. If an alternative manufacturer and/or product is desired to be used by the Contractor, it will be considered a substitution. Substitutions will be interpreted to be all manufacturers or products other than the basis of design. Only one request for substitution will be considered for each item of material or equipment. No substitutions will be considered thereafter. After a substitution request is reviewed and is found to be unacceptable the Architect/Engineer reserves the right to require the originally specified equipment or product at no additional cost to the Owner.

D. In any case where the Contractor intends to utilize a listed or unlisted acceptable equipment manufacturer that is not the basis of design as listed on the drawings and in the specifications, it is the Contractor's responsibility to confirm prior to bidding that all ductwork, piping, controls, electrical power, conduit, service clearances, space requirements, and structural requirements match those of the basis of design equipment. Costs for any revisions necessary to accommodate the ductwork, piping, controls, electrical power, conduit, service clearances, space requirements, and structural requirements for the alternative equipment are the responsibility of the Contractor and shall be included in the Contractor's bid, this includes any costs associated with re-design or necessary calculations by the project Architect or Engineers. No extra cost will be allowed for failure to allow for accommodations related to the alternative equipment in the Contractor's bid.

E. Submit to the Architect/Engineer for review, within a reasonable time after award of Contract and in ample time to avoid delay of construction, shop drawings or submittals on all items of equipment and materials, including all substitutions. Also see Division 1 for additional related requirements.

F. If the Contractor desires to make a substitution, he shall submit complete information or catalog data to show equality of equipment or material offered to that specified. No substitutions will be allowed unless requested and reviewed in writing. The Architect/Engineer will review and take appropriate action on shop drawings, product data, samples, and other submittals as required by the contract documents. Such review shall be only for general conformance with the design concept and general compliance with the information given in the contract documents. The

review shall not include review of quantities, dimensions, weights or gauges, fabrication processes, construction methods, coordination with the work of other trades, or construction safety precautions, all of which are the sole responsibility of the Contractor. Review of a specific item shall not indicate acceptance of an assembly of which the item is a component. The Architect/Engineer shall not be required to review and shall not be responsible for any deviations from the Contract Documents not clearly noted by the Contractor, nor shall the Architect/Engineer be required to review partial submissions or those for which submissions for correlated items have not been received. The Architect/Engineer reserves the right to require the originally specified item at no additional cost to the Owner.

G. Installation of reviewed substitutions is the Contractor's responsibility. Any changes required for installation of reviewed substituted equipment must be made without additional cost to the Owner. Review by the Architect/Engineer of the substituted equipment and/or the dimensioned drawings does not waive the requirements stated herein.

2.2 COMPARABLE PRODUCTS

A. Conditions for Consideration: Engineer will consider Contractor's request for comparable product when the following conditions are satisfied. If the following conditions are not satisfied, Engineer may return requests without action, except to record noncompliance with these requirements:
   1. Evidence that the proposed product does not require revisions to the Contract Documents, that it is consistent with the Contract Documents and will produce the indicated results, and that it is compatible with other portions of the Work.
   2. Detailed comparison of significant qualities of proposed product with those named in the Specifications. Significant qualities include attributes such as performance, weight, size, durability, visual effect, and specific features and requirements indicated.
   3. Evidence that proposed product provides specified warranty.
   4. List of similar installations for completed projects with project names and addresses and names and addresses of engineers and owners, if requested.
   5. Samples, if requested.

PART 3 EXECUTION

3.1 VISIT TO SITE

A. Visit site, and survey existing conditions affecting work prior to bid. Include necessary materials and labor to accomplish the electrical work, including relocation of existing services and utilities on building site in bid. No consideration shall be given to future claims due to existing conditions. Any discrepancies or interference's shall be reported immediately to the Engineer.

3.2 WORKMANSHIP

A. All work performed shall be first class work in every aspect. The work shall be performed by mechanics skilled in their respective trades, who shall at all times be under the supervision of competent persons. All work shall be installed to comply with NECA's "Standard of Installation."

B. Work under this Division shall be first class with emphasis on neatness and workmanship. All work shall be installed square and plumb and concealed where possible. Work that is deficient, defective, poorly laid out, not perfectly aligned, or that is not consistent with the requirements generally accepted in the trade for "first class work" will not be acceptable.

C. In addition to the materials specified elsewhere, furnish and install all other miscellaneous items necessary for the completion of the work to the extent that all systems are complete and operative.

D. All work under this Section shall be performed in cooperation with the work performed under all other Sections of the Specifications for the Project in order to avoid interference with other work and to secure the proper installation of all work. Refer the Drawings and Specifications covering the work to be performed under all Sections, so that the relation and extent of the work of this Section with respect to the work of all other Sections is understood. Give right of way to raceways and piping systems installed at a required slope.

E. Install work using competent mechanics, under supervision of foreman, all duly certified by local authorities. The installation shall be subject to the Engineer's observation, and final acceptance. The Engineer may reject unsuitable work.

F. Conduit systems must be complete prior to installation of wiring.

3.3 CHANGE ORDERS

A. Additional work may be required on the project which is outside the scope of the contract. Such additional work will be described in Supplemental Instructions and/or Clarifications, to be estimated and priced by the Contractor, and accepted by the Owner, prior to commencing work. Proposals shall include a list of quantities of all material being used with unit costs broken down into material and labor costs per unit.

B. Material costs and labor units shall not exceed the latest edition of RS Means Electrical Cost Data.

C. See the General Conditions of the Specifications for acceptable charges.

3.4 GUARANTEE

A. Furnish the Owner a written guarantee, stating that if workmanship and/or material executed under this Division is proven defective within one (1) year after final acceptance by the Owner, such defects and other work damaged will be repaired and/or replaced. Submit with Operations and Maintenance Manuals.

B. Obtain from the various manufacturers or vendors guarantees or warranties for their particular equipment or components, and deliver them to the Owner. All guarantees and warranties provided shall be referenced to this project.

C. In event that systems are placed in operation in several phases at the Owner's request, guarantee will begin on date each system or item of equipment is accepted for service by the Owner. Provide O&M manuals for all equipment when equipment is accepted for service by the Owner.

D. All guarantees and warranties shall include labor and material at the site of installation for the duration of the guarantee period.

3.5 OBSERVATIONS OF WORK AND DEMONSTRATION OF OPERATION (ACCEPTANCE)

A. At all observations of work, open panel covers, junction box covers, pull box covers, device covers, and other equipment with removable plates for observation. Provide sufficient personnel to expedite cover removal and replacement.

B. Contractor to demonstrate operation of new equipment and/or systems to satisfaction of Owner/Engineer. Contractor to have manufacturer available for demonstration of equipment and/or systems where requested by Owner/Engineer. Furnish affidavit signed by Owner's representative indicating that demonstration of operation has been performed.

3.6 COOPERATION AND COORDINATION

A. Carefully coordinate work with other contractors and subcontractors. Refer conflicts between trades to Engineer. Provide necessary information to other trades for such coordination. Such information shall include Shop Drawings, Product Data and all other required data. There shall be no additional cost to the owner for any post-bid changes made to the electrical design and/or construction that are generated by changes to the basis-of-design equipment of any discipline. This includes changes made by substituted, alternate or comparable products regardless of manufacturer.

B. Provide a system erection/coordination drawing showing electrical, HVAC, plumbing and architectural for installation in congested areas. Drawings shall be in plan view for work above the ceilings and also sections shall be provided showing the elevations of conduit racks and routing and the coordination with mechanical piping and ductwork.

C. Whenever such information is not provided in a timely manner or whenever such information is incorrect, this contractor shall bear all costs for providing or correcting affected work of related trades with no change to the Contract Price or Construction Schedule.

D. Work to be installed as progress of project will allow. Schedule of work determined by General Contractor, Owner, and/or Architect/Engineer.

3.7 COORDINATION OF UTILITY SERVICES

A. Drawings indicate proposed service layouts. The Contractor shall provide all concrete structures, pullboxes, vaults, trenching, raceways, protective bollards, etc., as required per NV Energy standards.

3.8 HVAC CONTROL WIRING

A. Control Wiring including low voltage and line voltage interlock wiring will be furnished and installed under Division 23, except where specifically shown otherwise. Carefully coordinate power and control wiring interface.

B. This Contractor shall obtain from Division 23 all wiring diagrams associated with the HVAC work and furnish all power and 120V control wiring, disconnects and starters for equipment not already packaged with these items. All wiring and conduit associated with the HVAC Temperature Control System is included under Division 23. Wiring and conduit shall comply with Division 26. All electrical work associated with the HVAC system shall be done under the supervision of Division 23.

3.9 STARTERS

A. Separately mounted starters are furnished and installed under Division 26 unless specifically shown otherwise. All power wiring, fuses, thermal overloads, and disconnect switches and connection of all motors is under this division. Provide the proper feeders and connections as

recommended by the manufacturer of the equipment. See Spec Section 26 29 13 Enclosed Controllers.

3.10 PROTECTING

A. Provide warning lights, bracing, shoring, rails, guards and covers necessary to prevent damage or injury. All persons working around electrical equipment shall have electrical shock and flash protection per OSHA 1910.301-309 & 331-335.

B. Do not leave exposed or unprotected, electrical items carrying current. Protect visitors and workers from exposure to contact with electrically energized surfaces, parts, etc. in accordance with OSHA standards.

3.11 DELIVERY, STORAGE AND HANDLING

A. Deliver equipment and materials to job site in original, unopened, labeled container. Products shall be properly identified with names, model numbers, types, grades, compliance labels and other information needed for identification. Store to prevent damage and injury. Store materials to prevent corroding. Store finished materials and equipment to prevent staining and discoloring. Store materials affected by condensation in warm dry areas. Provide heaters. Contractor shall verify the availability of on site storage space, if no on site storage space is available then the contractor shall cover the cost for off site storage. Materials stored at the project site that becomes soiled with construction dirt, concrete, or moisture shall be removed from the site and replaced with new. Do not install soiled material.

B. Protect work and materials from damage by weather, entrance of water or dirt. Cap and mark conduit during installation.

C. Avoid damage to materials and equipment in place. Repair, or remove and replace damaged work and materials.

D. Protection and safekeeping of products stored on premises is responsibility of Contractor supplying products.

E. Schedule of deliveries and unloading to prevent traffic congestion blocking of access or interference with work. Arrange deliveries to avoid larger accumulations of materials than can be suitably stored at site.

F. Install equipment per manufacturer's recommendations. Conflicts between contract documents and these recommendations shall be referred to Engineer for remedy.

G. Electrical or electronic equipment that has been damaged, exposed to weather or is, in the opinion of the Engineer or Architect, otherwise unsuitable because of improper fabrication, storage or installation shall be removed and replaced by this Contractor at his expense.

3.12 ANCHORS

A. Provide anchors for all equipment, raceways, hangers, etc. to safely support weight of item involved plus 100% for dead loads. Live loads shall be considered in addition to dead loads.

B. Anchors to consist of expansion type devices similar to "Redhead" or lead expansion anchors. Plastic anchors are not acceptable.

C. Use preset anchor steel inserts in concrete slabs. Provide preset anchor size and type for anticipated or specified rod/bolt size and live/dead load.

3.13 CLEANING AND PAINTING

A. Clean equipment furnished in this Division after completion of work. Clean wipe the interior of all conduit, pullboxes, junction boxes, outlet boxes, and panelboard backboxes, soiled with dirt and debris prior to installation of wiring.

B. Touch-up or re-paint damaged painted finishes as determined by the Engineer.

C. Remove debris, packing cartons, scrap, etc., from site daily.

3.14 SPARE PARTS

A. Where spare parts are specified in the Technical Sections, furnish spare parts to Owner with itemized receipt. Contractor is responsible to deliver parts and have receipt signed by Owner's representative. Turn over receipt with as-built documents.

3.15 HOUSEKEEPING PADS

A. Furnish 2500 # concrete pads, 4” high (interior locations) or 6” high (exterior locations) unless otherwise noted, for all freestanding equipment, i.e.: switchboards, panels, control panels, motor control centers, transformers, etc. Pads shall have 1" x 45° chamfered edges, and shall extend 2” to 4" beyond equipment mountings.

3.16 TRAINING

A. Training for operation and maintenance of new systems or modifications to existing systems is specified in Technical sections. Contractor shall submit with record documents an itemized receipt signed by Owner’s representative that all specified training has been received.

3.17 ACCESS PANELS

A. The contractor shall furnish all access panels for walls, partitions, etc., and shall give access panel to the General Contractor for installation at locations as directed by the Electrical Contractor. It shall be the responsibility of the Electrical Contractor that access panels are provided for access to all boxes, bus joints, equipment, etc., which may be concealed by building construction to comply with the NEC and NFPA. Access panels shall be installed so as not to interfere with lighting arrangements.

END OF SECTION

SECTION 260002 - ELECTRICAL SUBMITTALS

PART 1 GENERAL

1.1 DESCRIPTION OF SUBMITTAL CATEGORIES

A. The required submittals are defined below and specified in each section.
   1. Requests for substitutions are written requests to use materials, equipment, etc., different from that specified.
   2. Shop Drawings include fabrication, layout, wiring diagrams, erection, setting, coordination, drawings and diagrams and performance data.
   3. Samples are units of work, materials or equipment items, showing the workmanship, pattern, trim and similar qualities proposed.
   4. Manufacturer's Data is standard printed product information concerning the standard portions of the manufacturer's products.
   5. Certifications are written statements, executed specifically for the project application by an authorized officer of the contracting firm, manufacturer, or other firm as designated, certifying to compliance with the specified requirements.
   6. Test Reports are specific reports prepared by independent testing laboratories, showing the results of specified testing.
   7. Industry Standards are printed copies of the current standards in the industry.
   8. Manufacturer's Product Warranties are manufacturer's standard printed commitment in reference to a specific product and normal application, stating that certain acts of restitution will be performed by the manufacturer if the product fails under certain conditions and times limits.
   9. Operating Instructions are the written instructions by the manufacturer, fabricator or installer of equipment or systems, detailing the procedures to be followed by the Owner’s in operation, control and shut-down.
   10. Maintenance Manuals are the compiled information provided for the Owner’s maintenance of each system of operating equipment.
   11. Maintenance Materials (spare parts) are extra stock of parts or materials for the Owner's initial use in maintaining the equipment and systems in operation.
   12. Record Drawings are accurate representations of the installed systems and wiring as recorded on a daily “as-installed” basis.
   13. Guarantees are signed commitments to the Owner that certain acts of restitution will be performed if certain portions of work fail within certain conditions and time limits.
   14. Product Data includes manufacturer's data pertaining to the products, materials and equipment of the work.
   15. Method of Procedures are detailed sequences of work required during interruption of service and/or connection to energized parts of systems requiring special sequences or protections.
   16. Training – Materials and sign-off of completion.
   17. Identification nomenclature – See Section 260553.

PART 2 PRODUCTS

2.1 PROPOSED MATERIAL MANUFACTURERS

A. Submit to Consultant within 30 days after award of contract a complete list of proposed material manufacturers. List does not preclude submission of shop drawings. Acceptance of manufacturer on list does not constitute acceptance of specific material or equipment. If shop drawings are submitted with non approved substitutions, the contractor will pay the expense incurred by the consultant to review the shop drawings of any re-submittal.

PART 3 EXECUTION

3.1 SUBSTITUTIONS

A. Refer to Section 012500 - Substitution Procedures for substitution requirements.

B. See General Conditions of the specifications for information regarding substitutions. Specified catalog numbers are used for description of equipment and standard of quality only. Equivalent material will be given consideration only if adequate comparison data including samples if requested by Engineer are provided. Alternate products shall meet or exceed design criteria.

3.2 SUBMITTAL FORM AND PROCEDURES

A. Refer to Section 013300 - Submittal Requirements for submittal procedures.

B. Shop and Erection Drawings
   1. Submit shop drawings for material and equipment furnished under Division 26 of specifications, to Consultant for review within 30 days after award of contract. Shop drawings shall be submitted on timely basis to allow adequate lead time for review, re-submission if necessary, manufacture and delivery to allow access of material to project at correct time based on schedule established by Consultant/Contractor. Provide index with thumb tabs collated with Table of Contents for sections. Include complete descriptive data with dimensions, operating data and weight for each item of equipment. Carefully examine shop drawings to assure compliance with drawings and specifications prior to submittal to Consultant. Shop drawings and submittals shall bear the stamp of approval of the Electrical Contractor as evidence that they have checked the drawings. Drawing submitted without this stamp of approval will not be considered and will be returned for proper re-submission. All shop drawings shall be submitted as a single one time complete package. Partial packages shall not be reviewed.
      a. Submit electronic files for review.
      b. Clearly mark each shop drawing item to correspond to drawings and specifications. Any drawings not clearly marked will be rejected.
      c. Review of shop drawings does not relieve Contractor of responsibility for errors and omissions in shop drawings. Contractor is responsible for dimensions and sizes of equipment. Inform Engineer in writing of equipment differing from that specified.

C. "Record" Drawings
   1. 1. One complete set of prints will be furnished to the Contractor to indicate actual location of conduit systems, outlets, and equipment. Keep set of prints on job and record day to day changes to Contract drawings with red pencil. Provide “Record" drawings as

specified in the General Conditions or Division 01 of the specifications at the completion of job.

D. Maintenance Materials
   1. Submit a list of all warranties and guarantees.
   2. Submit with final close out documents a signed receipt for all maintenance materials (spare parts) specified. See Technical Sections for required materials.

E. Product Warranties and Guarantees
   1. Submit fully executed Product Warranties and Contractor Guarantees to the Owner with final close out documents.

F. Maintenance Manuals
   1. Submit to Consultant copies as required by general project conditions of data prepared by manufacturer for each item and/or device of electrical equipment furnished in this contract completely describing and identifying equipment. Data to include serial numbers, catalog/model numbers, parts lists, description of operation, final shop drawings, wiring diagrams, all electrical ratings, set-up and maintenance procedures and other literature required for maintenance of equipment. See Technical Sections for other required information.

G. Summary of Project Closeout Items for Owner
   1. Certificates of inspection and approval from authorities having jurisdiction.
   2. Executed Guarantees and Product Warranties.
   3. “Record” drawings.
   4. Final shop drawings.
   5. Final Erection drawings.
   6. Receipt for maintenance materials (spare parts).
      a. Maintenance manuals.
      b. Receipt for keys.
      c. Completed test reports.
      d. Signed off observation and punch lists.
      e. Lien waivers.

3.3 SPECIFIC SUBMITTAL REQUIREMENTS

A. Shop Drawings shall include, but not be limited to the following:
   1. Shall be drawn to accurate scale except where diagrammatic representations are specifically indicated.
   2. Shall show clearance dimensions of critical locations and show dimensions of spaces required for operation and maintenance of equipment.
   3. Shall show conduit and conductor connections and other service connections.
   4. Shall show interfaces with other work including structural support.
   5. Shall include complete descriptive data, with dimensions, operating data and weight.
   6. Shall indicate deviation from the contract documents.
   7. Shall explain deviations.
   8. Shall show short circuit current ratings for all electrical equipment.
   9. Shall show how deviations coordinate with portions of the work, currently or previously submitted.

B. Review of shop drawings shall not relieve Contractor of responsibility for errors or omissions in shop drawings. Any equipment that will not fit into space shown on drawings shall be called to the attention of the Engineer in writing.

C. Samples: Submit samples where requested by Engineer. Engineer's review of sample submittals
   1. Shall be limited to general type, pattern and finish.
   2. Shall not include testing and inspection of the submitted samples.
   3. Shall not indicate complete compliance with specified requirements. Complete compliance with specifications is the exclusive responsibility of the Contractor.

D. Manufacturer's Data
   1. Where pre-printed data covers more than one distinct item, mark copy to clearly indicate which item is to be provided.
   2. Contractor shall delete portions of data not applicable.
   3. Contractor shall mark data showing portion of operating range required for project application.
   4. Elaboration of standard data describing a non-standard product shall be processed as a shop drawing.
   5. For each product Contractor shall include the following information summarized into a single sheet document for each product
      a. Manufacturer's production specifications including catalog/model number.
      b. Manufacturer's Serial Number.
      c. Installation or fabrication instructions.
      d. Source of supply.
      e. Sizes, weights, speeds and operating capacities.
      f. All electrical ratings, including temperature rating of terminals.
      g. Conduit and wire connection sizes and locations.
      h. All thermal ratings.
      i. Statements of compliance with required standard and governing regulations.
      j. Cooling requirements and makeup and/or ventilating air requirements.
      k. Performance data, where applicable.
      l. All sound ratings.
      m. Other information needed to confirm compliance.
      n. Manufacturers recommended parts list.
      o. Other information required by Technical Sections.

E. Source Codes: Provide Source Code in both electronic and paper format and Source Code Licenses for all equipment that is computer driven. Provide Development licenses so Source Code can be examined, modified, and maintained. These Development Licenses, along with all software licenses shall become property of the Owner. At the discretion of the owner, third parties will be allowed to use the software as necessary, for the life of the work in this project. No encryption or other obfuscation will be allowed.

F. Certifications: Contractor shall submit with notarized execution.

G. Test Reports: Submit notarized test reports signed and dated by firm performing test.

H. Manufacturer's Product Warranties: Contractor shall submit product warranties in accordance with the technical sections. Where published warranty includes deviation from required

warranty, product is disqualified from use on project, unless manufacturer issues a specific project warranty.

I. Operating Instructions required
   1. Submit manufacturer's operating instructions for each item of electrical equipment.
   2. Submit supplement with additional project application instructions where necessary.
   3. Submit specific operating instructions for each electrical system that involves multiple items of equipment.
   4. Submit instructions for charging, start-up, control or sequencing of operation, phase or seasonal variations, shut-down, safety and similar operations.
   5. All operating instructions shall be typewritten in completely explained and easily understood English language.

J. Maintenance Manual Requirements
   1. Provide emergency instructions including addresses and telephone numbers for service sources.
   2. Provide regular system maintenance procedures.
   3. Indicate proper use of tools and accessories.
   4. Provide wiring and control diagram for each system.
   5. Provide manufacturer's data for each operational item in each system.
   6. Provide source code submittal for all software controlled equipment.
   7. Provide manufacturer's product warranties, and guarantee relating to the system and equipment items in the system.
   8. Provide Final Shop and Erection drawings relating to the system.
      a. Bind each operating and maintenance manual in one or more vinyl-covered, 2” 3-ring binders, plus pocket-folders for folded drawings. Index with thumb tab collated with Table of Contents for sections. Mark the back spine and front cover of each binder with system identification and volume number.

K. Maintenance Materials: Deliver all materials to the Owner in fully identified containers or packages suitable for storage. Obtain receipt for all delivered materials signed by the Owner’s Representative.

L. Guarantees: Where indicated as "Certified", provide guarantee which, in addition to execution by an authorized officer of each guarantor, is attested to by the Secretary of each guarantor and bears the corporate seal. Submit draft of each guarantee prior to execution.

PART 2 PRODUCTS - NOT APPLICABLE

PART 3 EXECUTION - NOT APPLICABLE

END OF SECTION

SECTION 260003 - TEMPORARY ELECTRICAL FACILITIES FOR CONSTRUCTION

PART 1 GENERAL

1.1 DESCRIPTION OF WORK

A. Furnish temporary electrical facilities to provide lighting and power for construction. Temporary power must be installed in accordance with the National Electrical Code, National Electrical Safety Code, local utility, local codes and authority having jurisdiction.

B. Coordinate temporary electrical facilities with other trades.

C. See General Conditions, Supplemental General Conditions for additional information.

PART 2 PRODUCTS

2.1 MATERIALS

A. General: Provide new or used materials and equipment suitable for intended use. Ensure safe, adequate performance of facilities in accordance with governing regulations. Used equipment shall be in good, safe working order.

PART 3 EXECUTION

3.1 INSTALLATION AND OPERATION

A. Except for self-contained facilities, connect and terminate temporary electrical facilities at locations required for proper distribution.

B. Do not subject electrical facilities on either temporary work or temporary use of permanent work to excess demand or overload.

3.2 SERVICE CONNECTION

A. Obtain temporary service from NV Energy. Install service in conformance with NEC 230 and 590.

3.3 GROUNDING

A. Power service and distribution system shall be properly grounded in accordance with NEC requirements.

B. Ground the system neutral in accordance with NEC 250.

C. Provide feeders and branch circuits with ground wire sized per NEC 250-122.

3.4 POWER SYSTEM AND DISTRIBUTION

A. Provide required distribution and capacity of system. Over-current protection, fusible and/or circuit breakers sized per NEC.

B. For 120/240 volts, single-phase system; use 3-wire 120/240-volt feeders and branch circuits.

C. For 120/208 volt, 3 phase, 4-wire system; use 120/208 volt balanced single-phase 3-wire distribution or 120/208 volts, 3 phase, 4-wire distribution.

D. For 480 volt, 3 phase, 3-wire distribution system; use balanced 2-wire single phase or 3-wire, 3 phase feeders for step-down to 120/240 volt or 120/208 volt utilization.

E. For 277/480 volt distribution system; use balanced 2-wire single phase or 3 and 4-wire, 3 phase feeders for step-down to 120/240 volt or 120/208 volt utilization.

F. Step-down transformers inside building shall be dry-type construction; protect from weather and construction damage.

G. Use No. 12 wire for branch circuits less than 100 feet to last outlet, and No. 10 wire for circuits beyond 100 feet. Install branch circuits using NEC approved wiring methods.

H. Balance loads connected to 3 phase services within reasonable limits.

3.5 PLUG-IN RECEPTACLES

A. Use 20A, duplex, NEMA grounded type or as required for special equipment.

B. Branch circuits feeding receptacles shall be 20A or as required for special equipment.

C. Provide receptacles to be reached by 50-foot extension cord.

D. All receptacle circuits shall be protected by dynamic type ground-fault circuit interrupters, which automatically disconnect circuit when leakage current of 4-6MA is detected.

E. Receptacles shall not be placed on the same circuit with temporary lighting.

3.6 TEMPORARY LUMINARIES

A. Provide luminaries approved by NEC for temporary construction wiring.

B. Lamps shall be rough service equipped with guards to protect from contact and damage (sizes as needed).

3.7 LAMPS AND REPLACEMENTS

A. Provide lamps.

B. Replace burned out lamps to maintain required lighting levels throughout the duration of the project.

3.8 INSTALLATION OF CIRCUITS

A. Install required lighting and receptacle circuits along a route least objectionable to construction work as determined by Contractor. Protect circuits where exposed to damage.

3.9 PERMANENT WIRING SYSTEM

A. Do not use permanent wiring for construction without specific acceptance of the Owner. Before using permanent wiring for temporary service, submit a list of uses to the Owner. The Owner may refuse use of permanent equipment for temporary service. Use of permanent equipment prior to Substantial Completion shall not affect warranty period.

3.10 REMOVAL AND RESTORATION

A. Temporary wiring shall be removed immediately upon completion of construction or purpose for which the wiring was installed. Repair or replace work damaged by temporary electrical facilities.

Clean and restore permanent electrical system used to provide temporary services to condition of new and unused work.

1. Electrical work installed as temporary facilities, upon removal, remains property of Installer.
2. Replace lamps of permanent light fixtures used for temporary lighting that have burned out or are noticeable dim. All permanently installed fixtures in the construction area lamps shall be removed and cleaned.
3. Where temporary use of lamps exceeds 50 percent of lamp life, replace lamps.

B. At Substantial Completion, clean permanent electrical work used as temporary facilities. Remove debris accumulated in electrical spaces.

END OF SECTION

SECTION 260503 - EQUIPMENT WIRING CONNECTIONS

PART 1 GENERAL

1.1 SUMMARY

A. Section includes electrical connections to equipment.

1.2 RELATED SECTIONS:

A. Section 260519 - Low-Voltage Electrical Power Conductors and Cables.

B. Section 260533 - Raceway and Boxes for Electrical Systems.

1.3 REFERENCES

A. National Electrical Manufacturers Association:
   1. NEMA WD 1 - General Requirements for Wiring Devices.
   2. NEMA WD 6 - Wiring Devices-Dimensional Requirements.

1.4 SUBMITTALS

A. Refer to Section 013300 - Submittal Requirements for submittal procedures.

B. General Conditions: Submittal procedures.

C. Product Data: Submit wiring device manufacturer’s catalog information showing dimensions, configurations, and construction.

D. Manufacturer's installation instructions.

1.5 CLOSEOUT SUBMITTALS

A. General Conditions: Submittal procedures.

B. Project Record Documents: Record actual locations, sizes, and configurations of equipment connections.

1.6 COORDINATION

A. General Conditions: Coordination and project conditions.

B. Obtain and review shop drawings, product data, manufacturer’s wiring diagrams, and manufacturer's instructions for equipment furnished under other sections.

C. Determine connection locations and requirements.

D. Sequence rough-in of electrical connections to coordinate with installation of equipment.

E. Sequence electrical connections to coordinate with start-up of equipment.

PART 2 PRODUCTS

2.1 CORD AND PLUGS

A. Attachment Plug Construction: Conform to NEMA WD 1.

B. Configuration: NEMA WD 6; match receptacle configuration at outlet furnished for equipment.

C. Cord Construction: Type SO multiconductor flexible cord with identified equipment grounding conductor, suitable for use in damp locations.

D. Size: Suitable for connected load of equipment, length of cord, and rating of branch circuit overcurrent protection.

PART 3 EXECUTION

3.1 EXAMINATION

A. General Conditions: Coordination and project conditions.

B. Verify equipment is ready for electrical connection, for wiring, and to be energized.

3.2 INSTALLATION

A. Make electrical connections.

B. Make conduit connections to equipment using flexible conduit. Use liquidtight flexible conduit with watertight connectors in damp or wet locations and to motors.

C. Connect heat producing equipment using wire and cable with insulation suitable for temperatures encountered.

D. Install receptacle outlet to accommodate connection with attachment plug.

E. Install cord and cap for field-supplied attachment plug.

F. Install suitable strain-relief clamps and fittings for cord connections at outlet boxes and equipment connection boxes.

G. Install disconnect switches, controllers, control stations, and control devices to complete equipment wiring requirements.

H. Install terminal block jumpers to complete equipment wiring requirements.

I. Install interconnecting conduit and wiring between devices and equipment to complete equipment wiring requirements.

J. Coolers and Freezers: Cut and seal conduit openings in freezer and cooler walls, floor, and ceilings.

3.3 ADJUSTING

A. General Conditions: Testing, adjusting, and balancing.

B. Cooperate with utilization equipment installers and field service personnel during checkout and starting of equipment to allow testing and balancing and other startup operations. Provide personnel to operate electrical system and checkout wiring connection components and configurations.

END OF SECTION

SECTION 260519 - LOW-VOLTAGE ELECTRICAL POWER CONDUCTORS AND CABLES

PART 1 GENERAL

1.1 SUMMARY

A. Section includes building wire and cable and wiring connectors and connections.

1.2 RELATED SECTIONS:

A. Section 260553 - Identification for Electrical Systems: Product requirements for wire identification.

1.3 REFERENCES

A. International Electrical Testing Association:
   1. NETA ATS - Acceptance Testing Specifications for Electrical Power Distribution Equipment and Systems.

B. National Fire Protection Association:
   1. NFPA 70 - National Electrical Code.
   2. NFPA 262 - Standard Method of Test for Flame Travel and Smoke of Wires and Cables for Use in Air-Handling Spaces.

C. Underwriters Laboratories, Inc.:
   1. UL 1277 - Standard for Safety for Electrical Power and Control Tray Cables with Optional Optical-Fiber Members.

1.4 SYSTEM DESCRIPTION

A. Product Requirements: Provide products as follows:
   1. Solid conductor for feeders and branch circuits 12 AWG and smaller.
   2. Stranded conductors for feeders and branch circuits 10 AWG and larger.
   3. Stranded conductors for control circuits.
   4. Conductor not smaller than 12 AWG for power and lighting circuits.
   5. Conductor not smaller than 16 AWG for control circuits.
   6. Increase wire size in branch circuits to limit voltage drop to a maximum of 3 percent.

B. Wiring Methods: Provide the following wiring methods:
   1. All Locations Unless Noted Otherwise: Use only building wire, Type THHN/THWN or XHHW insulation, in raceway.

1.5 DESIGN REQUIREMENTS

A. Conductor sizes are based on copper. Aluminum is not acceptable.

1.6 SUBMITTALS

A. Refer to Section 013300 - Submittal Requirements for submittal procedures.

B. General Conditions: Requirements for submittals.

C. Product Data: Submit for building wire.

D. Test Reports: Indicate procedures and values obtained.

1.7 CLOSEOUT SUBMITTALS

A. General Conditions: Requirements for submittals.

B. Project Record Documents: Record actual locations of components and circuits.

1.8 QUALITY ASSURANCE

A. Provide wiring materials located in plenums with peak optical density not greater than 0.5, average optical density not greater than 0.15, and flame spread not greater than 5 feet (1.5 m) when tested in accordance with NFPA 262.

B. Maintain one copy of each document on site.

1.9 QUALIFICATIONS

A. Manufacturer: Company specializing in manufacturing products specified in this section with minimum three years documented experience.

1.10 FIELD MEASUREMENTS

A. Verify field measurements are as indicated on Drawings.

1.11 COORDINATION

A. General Conditions: Requirements for coordination.

B. Where wire and cable destination is indicated and routing is not shown, determine routing and lengths required.

C. Wire and cable routing indicated is approximate unless dimensioned.

PART 2 PRODUCTS

2.1 BUILDING WIRE

A. Product Description: Single conductor insulated wire.

B. Conductor: Copper (Aluminum is not acceptable).

C. Insulation Voltage Rating: 600 volts.

D. Insulation Temperature Rating: 90 degrees C.

E. Insulation Material: Thermoplastic.

2.2 ARMORED CABLE

A. Type AC Cable may not be used on this project.

2.3 METAL CLAD CABLE

A. Type MC Cable may not be used on this project and is strictly prohibited.

2.4 CONNECTORS AND SPLICES

A. Provide UL-listed factory-fabricated wiring connectors of size, ampacity rating, material, type and class for application and for service indicated. Select connectors to comply with Project's installation requirements and as specified in Part 3 "Applications" of this Article.

B. For Conductors #10 AWG and Smaller: Wire and cable connectors shall be solderless, twist on, 600 volts, 105°C., shall comply with UL 486A/C standards. Connectors coded for easy selection compatible with wiring to be spliced. Install connectors as recommended by manufacturer. Use proper crimping tool where crimp sleeves are used.
   1. Acceptable Connector Manufacturers:
      a. 3M- "Scotchlock"
      b. Buchanan - "B Cap"
      c. Thomas & Betts - "Stak-On"
      d. Ideal - "Wing Nuts"

C. Compression Splices: Splice conductors #8 and larger with solid copper barrel, type fittings applied with an appropriate hydraulic tool. Splices used only where approved. Splice fittings: Burndy "Hydent". Insulate splices with 600 volt, 105°C, "heat shrink", "cold shrink" covers, or taped insulation consisting of rubber, friction and vinyl tapes applied per manufacturer for 600 volt, 105°C covering to 150 percent of installation rating of conductor.
   1. Acceptable Splice and Tape Manufacturers:
      a. Burndy
      b. Thomas & Betts
      c. Ilsco
      d. Anderson
      e. Blackburn
      f. Oz/Gedney

D. Connectors and/or Terminations for Conductors #6 AWG and larger: Tin plated, 98% copper, dual crimp long barrel compression lugs with two bolt holes, insulated with molded covers to accommodate 1/2" bolts. Apply with hydraulic tool recommended by manufacturer.
   1. Acceptable Manufacturers and Products:
      a. O-Z Gedney
      b. Burndy Engineering Company "Hylugs"
      c. Thomas and Betts, "Color Keyed"
      d. Anderson

E. Use pulling lubricant which will not be detrimental to insulation of conductors indicated by published user information.
   1. Acceptable Manufacturers of Lubricant:
      a. Ideal Industries
      b. Panduit Corp.
      c. OZ/Gedney
      d. Plymouth/Bishop
      e. American Polywater Corp.
      f. Thomas & Betts

F. Insulate all live joints to 600 volts with strip rubber, friction tape, and electrical vinyl tape installed in accordance with manufacturers recommendations.

1. Acceptable Tape Manufacturers
   a. 3M
   b. Plymouth

PART 3 EXECUTION

3.1 EXAMINATION

A. General Conditions: Coordination and project conditions.

B. Verify interior of building has been protected from weather.

C. Verify mechanical work likely to damage wire and cable has been completed.

D. Verify raceway installation is complete and supported.

3.2 PREPARATION

A. Completely and thoroughly swab raceway before installing wire.

3.3 EXISTING WORK

A. Remove exposed abandoned wire and cable. Patch surfaces where removed cables pass through building finishes.

B. Disconnect abandoned circuits and remove circuit wire and cable. Remove abandoned boxes when wire and cable servicing boxes is abandoned and removed. Install black cover for abandoned boxes not removed.

C. Provide access to existing wiring connections remaining active and requiring access. Modify installation or install access panel.

D. Extend existing circuits using materials and methods as specified.

E. Clean and repair existing wire and cable remaining or wire and cable to be reinstalled.

3.4 INSTALLATION

A. Route wire and cable to meet Project conditions.

B. Neatly train and lace wiring inside boxes, equipment, and panelboards.

C. Identify and color code wire and cable under provisions of Section 16075. Identify each conductor with its circuit number or other designation indicated.

D. Install wiring complete with connections to equipment.

E. Install wiring so conductors are not in tension in completed system.

F. Form wiring neatly and group in circuit. Tie grouped conductors with nylon ties, T&B "Tyrap" or approved equivalent.

G. Each conduit run shall be run complete end to end before conductors are installed.

H. Use pulling lubricant to decrease pulling tension for all feeder cables, and all difficult cable pulls of any type or size. Pull all conductors into raceway at the same time.

I. Provide cable supports, at locations required by NEC and/or as shown. Supports with malleable screwed conduit fitting and non-conductive wedges drilled for the size conductors installed. Provide supports rated for all types of insulation and all voltage. Cable supports shall be O.Z./Gedney type "R" or accepted equivalent. Furnish pullbox, sized per NEC for each cable support.

J. Bond circuit ground wires where installed to all devices, equipment, outlet and junction boxes, and grounding bushings (where provided) with a full size conductor and lugged type connection.

K. Securely fasten non-ferrous identifying tapes, pressure sensitive labels or engraved nameplates to all cables, feeders and power cables exposed in vaults, inside pull boxes, exposed in manholes, exposed in switchboard, termination compartments, etc. See Section 260533 for nameplates and labels.

L. Join and terminate copper conductors individually. Do not mix voltages in the same raceway.

M. Provide lugs where not furnished as part of equipment - furnish as specified above, to connect all conductors.

N. Furnish lugs for conductors #1/0 and larger with two bolt tongue or accepted equivalent single bolt tongue with anti-turn devices.

O. Mark all branch circuit conductors at panel terminations including neutrals with pressure sensitive numbers to correspond to circuit numbers connected. See Section 16040 for labels.

P. Connect circuits and feeders as shown on drawings. Drawings are diagrammatic and do not show every detail required in the wiring system. Detail wiring accomplished per NEC.

Q. All conductors making up parallel feeders to be same size, same type, and same insulation, all cut same length. Bond each group of conductors making up a phase or neutral at both ends in an approved manner. Parallel conductors shall not be run in the same raceway.

R. DO NOT COMBINE CIRCUITS into more than three circuits per homerun unless specifically approved by the Consultant.

S. Neutral conductors shall not be used for equipment grounding.

T. Circuitry shall not be run in elevator shafts and hoistways.

U. Provide a separate neutral and grounding conductor for all GFI circuits or GFI devices to ensure an adequate ground-fault return path.

V. Use #10 AWG for all 20 amp, 120 volt homerun circuits that exceed 75 feet from center of load and 150 feet for 277 volt circuits.

W. Conductors for receptacle and lighting circuits shall be installed in accordance with the following conditions:
   1. Maximum one-way circuit length in feet for 90°C copper conductors with unity power factor to first device on circuit. Assumed 16A loading per circuit.
      a. 120V – Single Phase
         1) #12AWG – 53’
         2) #10AWG – 88’
         3) #8AWG – 138’

4) #6 AWG – 223’

b. 277V – Single Phase
1) #12AWG – 123’
2) #10AWG – 205’
3) #8AWG – 319’
4) #6AWG – 515’

X. Panelboards may not be used as raceways.

Y. Install crimp on fork terminals for device terminations. Do not place bare stranded conductors directly under screws.

Z. Install terminal lugs on ends of 600 volt wires unless lugs are furnished on connected device, such as circuit breakers.

AA. Size lugs in accordance with manufacturer’s recommendations terminating wire sizes. Install 2-hole type lugs to connect wires 4 AWG and larger to copper bus bars.

AB. For terminal lugs fastened together such as on motors, transformers, and other apparatus, or when space between studs is small enough that lugs can turn and touch each other, insulate for dielectric strength of 2-1/2 times normal potential of circuit.

AC. Clean conductor surfaces before installing lugs and connectors.

AD. Make splices, taps, and terminations to carry full ampacity of conductors with no perceptible temperature rise.

3.5 WIRE COLOR

A. General:
1. For wire sizes 10 AWG and smaller, install wire colors in accordance with the following:
a. Black and red for single phase circuits at 120/240 volts.
b. Black, red, and blue for circuits at 120/208 volts single or three phase.
c. Orange, brown, and yellow for circuits at 277/480 volts single or three phase.
2. For wire sizes 8 AWG and larger, identify wire with colored tape at terminals, splices and boxes. Colors are as follows:
a. Black and red for single phase circuits at 120/240 volts.
1) Black, red, and blue for circuits at 120/208 volts single or three phase.
2) Orange, brown, and yellow for circuits at 277/480 volts single or three phase.

B. Neutral Conductors: White. When two or more neutrals are located in one conduit, individually identify each with proper circuit number.

C. Branch Circuit Conductors: Install three or four wire home runs with each phase uniquely color coded.

D. Feeder Circuit Conductors: Uniquely color code each phase.

E. Ground Conductors:
1. For 6 AWG and smaller: Green.
2. For 4 AWG and larger: Identify with green tape at both ends and visible points including junction boxes.

3.6 FIELD QUALITY CONTROL

A. General Conditions: Field inspecting, testing, adjusting, and balancing.

B. Inspect and test in accordance with NETA ATS, except Section 4.

C. Perform inspections and tests listed in NETA ATS, Section 7.3.1.

END OF SECTION

SECTION 260526 - GROUNDING AND BONDING FOR ELECTRICAL SYSTEMS

PART 1 GENERAL

1.1 SUMMARY

A. Section Includes:
   1. Rod electrodes.
   2. Wire.
   3. Grounding well components.
   4. Mechanical connectors.
   5. Exothermic connections.

1.2 RELATED SECTIONS:

A. Section 033000 - Cast-In-Place Concrete for reinforcing: Bonding or welding bars when reinforcing steel is used for electrodes.

1.3 REFERENCES

A. Institute of Electrical and Electronics Engineers:
   1. IEEE 142 - Recommended Practice for Grounding of Industrial and Commercial Power Systems.
   2. IEEE 1100 - Recommended Practice for Powering and Grounding Electronic Equipment.

B. International Electrical Testing Association:
   1. NETA ATS - Acceptance Testing Specifications for Electrical Power Distribution Equipment and Systems.

C. National Fire Protection Association:
   1. NFPA 70 - National Electrical Code.

1.4 SYSTEM DESCRIPTION

A. Grounding systems use the following elements as grounding electrodes:
   1. Metal underground water pipe.
   2. Concrete-encased electrode.
   3. Rod electrode.

1.5 PERFORMANCE REQUIREMENTS

A. Grounding System Resistance: 5 ohms maximum.

1.6 SUBMITTALS

A. Refer to Section 013300 - Submittal Requirements for submittal procedures.

B. General Conditions: Requirements for submittals.

C. Product Data: Submit data on grounding electrodes and connections.

D. Test Reports: Indicate overall resistance to ground and resistance of each electrode.

E. Manufacturer's Installation Instructions: Submit for active electrodes.

F. Manufacturer's Certificate: Certify Products meet or exceed specified requirements.

1.7 CLOSEOUT SUBMITTALS

A. General Conditions: Requirements for submittals.

B. Project Record Documents: Record actual locations of components and grounding electrodes.

1.8 QUALITY ASSURANCE

A. Provide grounding materials conforming to requirements of NEC, IEEE 142, and UL labeled.

B. Maintain one copy of each document on site.

1.9 QUALIFICATIONS

A. Manufacturer: Company specializing in manufacturing Products specified in this section with minimum three years documented experience.

B. Installer: Company specializing in performing work of this section with minimum three years documented experience.

1.10 PRE-INSTALLATION MEETINGS

A. General Conditions: Pre-installation meeting.

B. Convene minimum one week prior to commencing work of this section.

1.11 DELIVERY, STORAGE, AND HANDLING

A. General Conditions: Requirements for transporting, handling, storing, and protecting products.

B. Accept materials on site in original factory packaging, labeled with manufacturer's identification.

C. Protect from weather and construction traffic, dirt, water, chemical, and mechanical damage, by storing in original packaging.

D. Do not deliver items to project before time of installation. Limit shipment of bulk and multiple-use materials to quantities needed for immediate installation.

1.12 COORDINATION

A. General Conditions: Requirements for coordination.

B. Complete grounding and bonding of building reinforcing steel prior concrete placement.

PART 2 PRODUCTS

2.1 ROD ELECTRODES

A. Product Description:
   1. Material: Copper-clad steel.
   2. Diameter: 3/4 inch (19 mm).
   3. Length: 8 feet(2.4 m).

B. Connector: Connector for exothermic welded connection.

2.2 WIRE

A. Material: Stranded copper.

B. Foundation Electrodes: As shown on drawings.

C. Grounding Electrode Conductor: Copper conductor bare.

D. Bonding Conductor: Copper conductor bare.

2.3 GROUNDING WELL COMPONENTS

A. Well Pipe: 8 inches NPS (DN200) by 18 inches (600 mm) long concrete pipe with belled end.

B. Well Cover: Cast iron with legend "GROUND" embossed on cover.

2.4 MECHANICAL CONNECTORS

A. Description: Bronze connectors, suitable for grounding and bonding applications, in configurations required for particular installation.

2.5 EXOTHERMIC CONNECTIONS

A. Product Description: Exothermic materials, accessories, and tools for preparing and making permanent field connections between grounding system components.

PART 3 EXECUTION

3.1 EXAMINATION

A. General Conditions: Verification of existing conditions before starting work.

B. Verify final backfill and compaction has been completed before driving rod electrodes.

3.2 PREPARATION

A. Remove paint, rust, mill oils, surface contaminants at connection points.

3.3 EXISTING WORK

A. Modify existing grounding system to maintain continuity to accommodate renovations.

B. Extend existing grounding system using materials and methods as specified.

3.4 INSTALLATION

A. Install in accordance with IEEE 142.

B. Install grounding and bonding conductors concealed from view.

C. Install grounding well pipe with cover at each rod location. Install well pipe top flush with finished grade.

D. Install grounding electrode conductor and connect to reinforcing steel in foundation footing as indicated on Drawings. Electrically bond steel together.

E. Bond together metal siding not attached to grounded structure; bond to ground.

F. Equipment Grounding Conductor: Install separate, insulated conductor within each feeder and branch circuit raceway. Terminate each end on suitable lug, bus, or bushing.

G. Install continuous grounding using underground cold water system and building steel as grounding electrode. Where water piping is not available, install artificial station ground by means of driven rods or buried electrodes.

H. Permanently ground entire light and power system in accordance with NEC, including service equipment, distribution panels, lighting panelboards, switch and starter enclosures, motor frames, grounding type receptacles, and other exposed non-current carrying metal parts of electrical equipment.

I. Install branch circuits feeding isolated ground receptacles with separate insulated grounding conductor, connected only at isolated ground receptacle, ground terminals, and at ground bus of serving panel.

J. Accomplish grounding of electrical system by using insulated grounding conductor installed with feeders and branch circuit conductors in conduits. Size grounding conductors in accordance with NEC. Install from grounding bus of serving panel to ground bus of served panel, grounding screw of receptacles, lighting fixture housing, light switch outlet boxes or metal enclosures of service equipment. Ground conduits by means of grounding bushings on terminations at panelboards with installed number 12 conductor to grounding bus.

K. Grounding electrical system using continuous metal raceway system enclosing circuit conductors in accordance with NEC.

L. Permanently attach equipment and grounding conductors prior to energizing equipment.

3.5 FIELD QUALITY CONTROL

A. General Conditions: Field inspecting, testing, adjusting, and balancing.

B. Inspect and test in accordance with NETA ATS, except Section 4.

C. Grounding and Bonding: Perform inspections and tests listed in NETA ATS, Section 7.13.

D. Perform ground resistance testing in accordance with IEEE 142.

E. Perform continuity testing in accordance with IEEE 142.

F. When improper grounding is found on receptacles, check receptacles in entire project and correct. Perform retest.

END OF SECTION

SECTION 260529 - HANGERS, SUPPORTS AND FIRESTOPPING FOR ELECTRICAL SYSTEMS

PART 1 – GENERAL

1.1 SUMMARY

A. Section Includes:
1. Conduit supports.
2. Formed steel channel.
3. Spring steel clips.
4. Sleeves.
5. Mechanical sleeve seals.
6. Firestopping relating to electrical work.
7. Firestopping accessories.
8. Equipment bases and supports.

1.2 REFERENCES

A. ASTM International:
1. ASTM E84 - Standard Test Method for Surface Burning Characteristics of Building Materials.
2. ASTM E119 - Standard Test Methods for Fire Tests of Building Construction and Materials.
3. ASTM E814 - Standard Test Method for Fire Tests of Through-Penetration Fire Stops.
4. ASTM E1966 - Standard Test Method for Fire-Resistive Joint Systems.

B. FM Global:
1. FM - Approval Guide, A Guide to Equipment, Materials & Services Approved By Factory Mutual Research For Property Conservation.

C. National Fire Protection Association:
1. NFPA 70 - National Electrical Code.

D. Underwriters Laboratories Inc.:
1. UL 263 - Fire Tests of Building Construction and Materials.
2. UL 723 - Tests for Surface Burning Characteristics of Building Materials.
3. UL 1479 - Fire Tests of Through-Penetration Firestops.
4. UL 2079 - Tests for Fire Resistance of Building Joint Systems.
5. UL - Fire Resistance Directory.

E. Intertek Testing Services (Warnock Hersey Listed):
1. WH - Certification Listings.

1.3 DEFINITIONS

A. Firestopping (Through-Penetration Protection System): Sealing or stuffing material or assembly placed in spaces between and penetrations through building materials to arrest movement of fire, smoke, heat, and hot gases through fire rated construction.

1.4 SYSTEM DESCRIPTION

A. Firestopping Materials: ASTM E119, ASTM E814, UL 263, UL 1479, to achieve fire ratings of adjacent construction. In accordance with Design Numbers.

B. Surface Burning: UL 723 with maximum flame spread / smoke developed rating of 25/450.

C. Firestop interruptions to fire rated assemblies, materials, and components.

1.5 PERFORMANCE REQUIREMENTS

A. Firestopping: Conform to UL for fire resistance ratings and surface burning characteristics.

1.6 SUBMITTALS

A. Refer to Section 013300 - Submittal Requirements for submittal procedures.

B. General Conditions: Requirements for submittals.

C. Shop Drawings: Indicate system layout with location and detail of trapeze hangers.

D. Product Data:
   1. Hangers and Supports: Submit manufacturers catalog data including load capacity.
   2. Firestopping: Submit data on product characteristics, performance and limitation criteria.

E. Design Data: Indicate load carrying capacity of trapeze hangers and hangers and supports.

F. Manufacturer's Installation Instructions:
   1. Hangers and Supports: Submit special procedures and assembly of components.
   2. Firestopping: Submit preparation and installation instructions.

G. Manufacturer's Certificate: Certify products meet or exceed specified requirements.

H. Engineering Judgements: For conditions not covered by UL or WH listed designs, submit judgements by licensed professional engineer suitable for presentation to authority having jurisdiction for acceptance as meeting code fire protection requirements.

1.7 QUALITY ASSURANCE

A. Through Penetration Firestopping of Fire Rated Assemblies: UL 1479 or ASTM E814 with 0.10 inch water gage (24.9 Pa) minimum positive pressure differential to achieve fire F-Ratings and temperature T-Ratings as indicated on Drawings, but not less than 1-hour.
   1. Wall Penetrations: Fire F-Ratings as indicated on Drawings, but not less than 1-hour.
   2. Floor and Roof Penetrations: Fire F-Ratings and temperature T-Ratings as indicated on Drawings, but not less than 1-hour.
      a. Floor Penetrations Within Wall Cavities: T-Rating is not required.

B. Through Penetration Firestopping of Non-Fire Rated Floor and Roof Assemblies: Materials to resist free passage of flame and products of combustion.
   1. Noncombustible Penetrating Items: Noncombustible materials for penetrating items connecting maximum of three stories.
   2. Penetrating Items: Materials approved by authorities having jurisdiction for penetrating items connecting maximum of two stories.

C. Fire Resistant Joints in Fire Rated Floor, Roof, and Wall Assemblies: ASTM E1966 or UL 2079 to achieve fire resistant rating as indicated on Drawings for assembly in which joint is installed.

D. Surface Burning Characteristics: 25/450 flame spread/smoke developed index when tested in accordance with ASTM E84.

1.8 QUALIFICATIONS

A. Manufacturer: Company specializing in manufacturing Products specified in this section with minimum three years documented experience.

B. Installer: Company specializing in performing work of this section with minimum three years documented experience approved by manufacturer.

1.9 PRE-INSTALLATION MEETINGS

A. General Conditions: Pre-installation meeting.

B. Convene minimum one week prior to commencing work of this section.

1.10 DELIVERY, STORAGE, AND HANDLING

A. General Conditions: Requirements for transporting, handling, storing, and protecting products.

B. Accept materials on site in original factory packaging, labeled with manufacturer's identification.

C. Protect from weather and construction traffic, dirt, water, chemical, and mechanical damage, by storing in original packaging.

1.11 ENVIRONMENTAL REQUIREMENTS

A. General Conditions: Environmental conditions affecting products on site.

B. Do not apply firestopping materials when temperature of substrate material and ambient air is below 60 degrees F (15 degrees C).

C. Maintain this minimum temperature before, during, and for minimum 3 days after installation of firestopping materials.

D. Provide ventilation in areas to receive solvent cured materials.

PART 2 – PRODUCTS

2.1 CONDUIT SUPPORTS

A. Hanger Rods: Threaded high tensile strength galvanized carbon steel with free running threads.

B. Beam Clamps: Malleable Iron, with tapered hole in base and back to accept either bolt or hanger rod. Set screw: hardened steel.

C. Conduit clamps for trapeze hangers: Galvanized steel, notched to fit trapeze with single bolt to tighten.

D. Conduit clamps - general purpose: One hole malleable iron for surface mounted conduits.

E. Cable Ties: High strength nylon temperature rated to 185 degrees F (85 degrees C). Self locking.

2.2 FORMED STEEL CHANNEL

A. Product Description: Galvanized 12 gage (2.8 mm) thick steel. With holes 1-1/2 inches (38 mm) on center.

2.3 SPRING STEEL CLIPS

A. Product Description: Mounting hole and screw closure.

2.4 SLEEVES

A. Sleeves Through Non-fire Rated Floors: 18 gage (1.2 mm) thick galvanized steel.

B. Sleeves for Through Non-fire Rated Beams, Walls, Footings, and Potentially Wet Floors: Steel pipe or 18 mm thick galvanized steel.

C. Sleeves for Through Fire Rated and Fire Resistive Floors and Walls, and Fire Proofing: Prefabricated fire rated sleeves including seals, UL listed.

D. Fire-stopping Insulation: Glass fiber type, non-combustible.

2.5 MECHANICAL SLEEVE SEALS

A. Product Description: Modular mechanical type, consisting of interlocking synthetic rubber links shaped to continuously fill annular space between object and sleeve, connected with bolts and pressure plates causing rubber sealing elements to expand when tightened, providing watertight seal and electrical insulation.

2.6 FIRESTOPPING

A. Refer to Section 078400 - Firestopping.

B. Manufacturers:
   1. Dow Corning Corp.
   2. 3M fire Protection Products.
   3. Specified Technology, Inc.
   4. Substitutions: General Conditions

C. Product Description: Different types of products by multiple manufacturers are acceptable as required to meet specified system description and performance requirements; provide only one type for each similar application.
   1. Silicone Firestopping Elastomeric Firestopping: Single component silicone elastomeric compound and compatible silicone sealant.
   2. Foam Firestopping Compounds: Single component foam compound.
   3. Formulated Firestopping Compound of Incombustible Fibers: Formulated compound mixed with incombustible non-asbestos fibers.
   4. Fiber Stuffing and Sealant Firestopping: Composite of mineral fiber stuffing insulation with silicone elastomer for smoke stopping.
   5. Mechanical Firestopping Device with Fillers: Mechanical device with incombustible fillers and silicone elastomer, covered with sheet stainless steel jacket, joined with collars, penetration sealed with flanged stops.
   6. Intumescent Firestopping: Intumescent putty compound which expands on exposure to surface heat gain.
   7. Firestop Pillows: Formed mineral fiber pillows.

D. Color: Dark gray.

2.7 FIRESTOPPING ACCESSORIES

A. Primer: Type recommended by firestopping manufacturer for specific substrate surfaces and suitable for required fire ratings.

B. Installation Accessories: Provide clips, collars, fasteners, temporary stops or dams, and other devices required to position and retain materials in place.

C. General:
   1. Furnish UL listed products.
   2. Select products with rating not less than rating of wall or floor being penetrated.

D. Non-Rated Surfaces:
   1. Stamped steel, chrome plated, hinged, split ring escutcheons or floor plates or ceiling plates for covering openings in occupied areas where conduit is exposed.
   2. For exterior wall openings below grade, furnish modular mechanical type seal consisting of interlocking synthetic rubber links shaped to continuously fill annular space between conduit and cored opening or water-stop type wall sleeve.

PART 3 – EXECUTION

3.1 EXAMINATION

A. General Conditions: Verification of existing conditions before starting work.

B. Verify openings are ready to receive sleeves.

C. Verify openings are ready to receive firestopping.

3.2 PREPARATION

A. Clean substrate surfaces of dirt, dust, grease, oil, loose material, or other matter affecting bond of firestopping material.

B. Remove incompatible materials affecting bond.

C. Obtain permission from Architect/Engineer before using powder-actuated anchors.

D. Do not drill or cut structural members.

3.3 INSTALLATION - HANGERS AND SUPPORTS

A. Anchors and Fasteners:
   1. Concrete Structural Elements: Provide precast inserts, expansion anchors, and preset inserts.
   2. Steel Structural Elements: Provide beam clamps, spring steel clips, steel ramset fasteners, and welded fasteners.
   3. Concrete Surfaces: Provide self-drilling anchors and expansion anchors.
   4. Hollow Masonry, Plaster, and Gypsum Board Partitions: Provide toggle bolts and hollow wall fasteners.
   5. Solid Masonry Walls: Provide expansion anchors and preset inserts.
   6. Sheet Metal: Provide sheet metal screws.
   7. Wood Elements: Provide wood screws.

B. Inserts:

1. Install inserts for placement in concrete forms.
2. Install inserts for suspending hangers from reinforced concrete slabs and sides of reinforced concrete beams.
3. Provide hooked rod to concrete reinforcement section for inserts carrying pipe over 4 inches (100 mm).
4. Where concrete slabs form finished ceiling, locate inserts flush with slab surface.
5. Where inserts are omitted, drill through concrete slab from below and provide through-bolt with recessed square steel plate and nut flush with top of slab.

C. Install conduit and raceway support and spacing in accordance with NEC.

D. Do not fasten supports to pipes, ducts, mechanical equipment, or conduit.

E. Install multiple conduit runs on common hangers.

F. Supports:
1. Fabricate supports from structural steel or formed steel channel. Install hexagon head bolts to present neat appearance with adequate strength and rigidity. Install spring lock washers under nuts.
2. Install surface mounted cabinets and panelboards with minimum of four anchors.
3. In wet and damp locations install steel channel supports to stand cabinets and panelboards 1 inch (25 mm) off wall.
4. Support vertical conduit at every floor.

G. Support EMT within twelve inches of each outlet, junction box, cabinet or fitting and every eight-foot there after. Combination box/conduit hangers are not allowed.

H. Acceptable Individual conduit hanger manufacturers
1. Appleton
2. Minerallac
3. OZ Mfr. Co.
4. Erico-Products
5. Steel City
6. Thomas & Betts

I. Support for multiple conduit runs shall consist of trapeze type hangers as required. Galvanized bolts or rods shall be 1/2” minimum diameter and anchored to structure. Provide support system clamp for each conduit on hangers. Support systems shall utilize 1-5/8” x 1-5/8” x 12 gage multi-purpose steel channels, complete with all necessary hardware, clamps, etc. all channel hardware shall be galvanized and/or plated to prevent corrosion. Channel sizes and quantity, and number of support rods shall be increased to support increased weights. Design each assembly to carry the combined weight of conduit and wire, assembly itself plus 100 pounds. Provide space for 25 percent additional conduit of the same size. See Section 16010 for anchor requirements.

J. Acceptable Manufacturers of channel support Systems
1. B-Line
2. Kindorf
3. Superstrut
4. Unistrut

3.4 INSTALLATION - FIRESTOPPING

A. Install material at fire rated construction perimeters and openings containing penetrating sleeves, piping, ductwork, conduit and other items, requiring firestopping.

B. Apply primer where recommended by manufacturer for type of firestopping material and substrate involved, and as required for compliance with required fire ratings.

C. Apply firestopping material in sufficient thickness to achieve required fire and smoke rating, to uniform density and texture.

D. Place foamed material in layers to ensure homogenous density, filling cavities and spaces. Place sealant to completely seal junctions with adjacent dissimilar materials.

E. Fire Rated Surface:
   1. Seal opening at floor, wall, partition, ceiling, and roof as follows:
      a. Install sleeve through opening and extending beyond minimum of 1 inch (25 mm) on both sides of building element.
      b. Size sleeve allowing minimum of 1 inch (25 mm) void between sleeve and building element.
      c. Pack void with backing material.
      d. Seal ends of sleeve with UL listed fire resistive silicone compound to meet fire rating of structure penetrated.
   2. Where cable tray, conduit, wireway, and cable penetrates fire rated surface, install firestopping product in accordance with manufacturer's instructions.

F. Non-Rated Surfaces:
   1. Seal opening through non-fire rated wall, partition, floor, ceiling and roof opening as follows:
      a. Install sleeve through opening and extending beyond minimum of 1 inch (25 mm) on both sides of building element.
      b. Size sleeve allowing minimum of 1 inch (25 mm) void between sleeve and building element.
      c. Install type of firestopping material recommended by manufacturer.
   2. Install floor plates or ceiling plates where conduit, penetrates non-fire rated surfaces in occupied spaces. Occupied spaces include rooms with finished ceilings and where penetration occurs below finished ceiling.
   3. Exterior wall openings below grade: Assemble rubber links of mechanical seal to size of conduit and tighten in place, in accordance with manufacturer's instructions.
   4. Interior partitions: Seal pipe penetrations at computer rooms and data rooms. Apply sealant to both sides of penetration to completely fill annular space between sleeve and conduit.

3.5 INSTALLATION - EQUIPMENT BASES AND SUPPORTS

A. Provide housekeeping pads of concrete, minimum 4” inches (87 mm) thick and extending 2” to 4” (150 mm) beyond supported equipment. Refer to Structural specifications and details.

B. Using templates furnished with equipment, install anchor bolts, and accessories for mounting and anchoring equipment.

C. Construct supports of steel members. Brace and fasten with flanges bolted to structure.

3.6 INSTALLATION - SLEEVES

A. Exterior watertight entries: Seal with adjustable interlocking rubber links.

B. Conduit penetrations not required to be watertight: Sleeve and fill with silicon foam.

C. Set sleeves in position in forms. Provide reinforcing around sleeves.

D. Size sleeves large enough to allow for movement due to expansion and contraction. Provide for continuous insulation wrapping.

E. Extend sleeves through floors 1 inch above finished floor level. Caulk sleeves.

F. Where conduit or raceway penetrates floor, ceiling, or wall, close off space between conduit or raceway and adjacent work with fire stopping insulation and caulk airtight. Provide close fitting metal collar or escutcheon covers at both sides of penetration.

G. Install chrome plated steel escutcheons at finished surfaces.

3.7 FIELD QUALITY CONTROL

A. General Conditions: Field inspecting, testing, adjusting, and balancing.

B. Inspect installed firestopping for compliance with specifications and submitted schedule.

3.8 CLEANING

A. General Conditions: Requirements for cleaning.

B. Clean adjacent surfaces of firestopping materials.

3.9 PROTECTION OF FINISHED WORK

A. General Conditions: Requirements for protecting finished Work.

B. Protect adjacent surfaces from damage by material installation.

END OF SECTION

SECTION 260530 - SEISMIC PROTECTION FOR ELECTRICAL EQUIPMENT

PART 1 – GENERAL

1.1 SUMMARY

A. Structural design and calculations for major equipment anchoring, conduit support, and bracing details.

1.2 RELATED SECTIONS

A. Drawings and general provisions of the Contract, including General and Supplementary Conditions and other Division 1 Specification Sections, apply to this section.

1.3 REFERENCES

A. International Building Code, 2018.

1.4 CODE INFORMATION

A. This project is subject to the seismic bracing requirements of the International Building Code, 2018 edition. The following criteria are applicable to this project.
   1. See Structural Drawings for project specific code analysis information and requirements.

B. It is recommended that the contractor enlist the services of a qualified seismic bracing vendor/supplier. Provide bracing for identified equipment and system.

C. Resistance to lateral forces induced by earthquakes shall be accomplished with consideration of friction resulting from gravity loads. The following companies are listed as resources for the Contractor to consider for obtaining competent assistance regarding the seismic bracing of mechanical piping and equipment. Since seismic constraint is not a common mechanical requirement for projects, and considering that the requirements are specific and include technical expertise, this information may be helpful.
   1. Amber Booth
   2. Cooper B-Line
   3. Mason Industries
   4. Tolco (Division of Nibco)

1.5 SUBMITTALS

A. Refer to Section 013300 - Submittal Requirements for submittal procedures.

B. Shop Drawings: Detail drawings along with catalog cuts, templates, and erection and installation details, as appropriate, for the items listed. Submittals shall be complete in detail; shall indicate thickness, type, grade, class of metal, and dimensions; and shall show construction details, reinforcement, anchorage, and installation with relation to the building construction.
   1. Lighting Fixtures in Buildings.
   2. Equipment Requirements.

C. Product Data:
   1. Copies of the design calculations with the detail drawings. Calculations shall be stamped by a registered engineer in the State of Nevada and shall verify the capability of structural members to which bracing are attached for carrying the load from the brace. Structural seismic calculations for equipment anchorage for major equipment shall be included.

2. Contractor Designed Bracing: Copies of the Design Calculations with the Drawings. Calculations shall be approved, certified, stamped and signed by a Registered Professional Engineer. Calculations shall verify the capability of structural members to which bracing are attached for carrying the load from the brace.

D. Include Seismic Certification for major equipment.
1. Light Fixtures.
2. Transformers.
3. Switchboards.
4. Panelboards.
5. UPS/Inverters.

1.6 QUALIFICATION

A. The manufacturer of the assembly shall be the manufacturer of the major components within the assembly.

B. For the equipment specified herein, the manufacturer shall be ISO 9001 or 9002 certified.

C. The manufacturer of this equipment shall have produced similar electrical equipment for a minimum period of five years. When requested by the engineer, an acceptable list of installations with similar equipment shall be provided demonstrating compliance with this requirement.

D. Provide Seismic qualified equipment as follows:
1. The equipment and major components shall be suitable for and certified by actual seismic testing to meet all applicable seismic requirements of the 2018 International Building Code (IBC) Site Classification D. The site coefficients Fa=1.0, and spectral response accelerations of Ss=1.334g, S1=0.53g are used. The test response spectrum shall be based upon a 5% damping factor, and a peak (Sds) of at least 2.15g's (3-12 Hz) applied at the base of the equipment in the horizontal direction. The forces in the vertical direction shall be at least 66% if those in the horizontal direction. The tests shall cover a frequency range from 1 to 100Hz. Guidelines for the installation consistent with these requirements shall be provided by the equipment manufacturer and based upon testing of representative equipment. Equipment certification acceptance criteria shall be based upon the ability for the equipment to be returned to service immediately after a seismic event within the above requirements without the need for repairs.

1.7 SYSTEM DESCRIPTION

A. The requirements for seismic protection measures described in this section shall be applied to the electrical equipment and systems listed below.

B. Electrical Equipment: Electrical equipment shall include the following items to the extent required on the Drawings or in other sections of these specifications:
1. Light Fixtures.
2. Transformers.
3. Switchboards.
4. Panelboards.
5. UPS/Inverters.

C. Electrical Systems: The following electrical systems shall be seismically protected in accordance with this specification: Lighting, power, security, communications and fire alarm.

D. Conduits Requiring No Special Seismic Restraints: Seismic restraints may be omitted from electrical conduit less than 2-1/2 inches trade size. All other interior conduit, shall be seismically protected as specified.

1.8 EQUIPMENT REQUIREMENTS

A. Rigidly Mounted Equipment: Constructed and assembled to withstand the seismic forces in accordance with IBC 2018. Each item of rigid electrical equipment shall be entirely located and rigidly attached on one side only of a building expansion joint. Piping, electrical conduit, etc., which cross the expansion joint shall be provided with flexible joints that are capable of accommodating displacements equal to the full width if the joint in both orthogonal directions.

PART 2 – PRODUCTS

2.1 LIGHTING FIXTURE SUPPORTS

A. Lighting fixtures and supports shall conform to UL 1570, UL 1571, UL1572, UL1573 or UL1574 as applicable.

PART 3 – EXECUTION

3.1 SWAY BRACES FOR CONDUIT

A. Sway bracing materials shall consist of rods, plates, angles, etc.

3.2 LIGHTING FIXTURES IN BUILDINGS

A. Pendant Fixtures: Per manufacturer's mounting requirements and details on plans. Provide sway bracing for all pendant fixtures that will hit something if they sway less than 45 degrees.
   1. Pendent fixtures must be able to sway 45 degrees from vertical without hitting ductwork, piping, walls, soffits, etc. Where this is not possible provide sway bracing per detail on plans.

B. Ceiling Attached Fixtures:
   1. Recessed LED Lighting Fixtures: Recessed LED individual or continuous- row mounted fixtures shall be supported be a seismic-resistant suspended ceiling support system built in accordance with the ASTM E580. Recessed lighting fixtures not over 56 pounds in weight may be supported be and attached directly to the ceiling seismic design. Fixture accessories, including louvers, diffusers, and lenses shall have lock or screw attachments.
   2. Surface-Mounted LED Fixtures: Surface-mounted LED individual or continuous-row fixtures shall be attached to a seismic-restraint ceiling support system built in accordance with ASTM E580.

C. Assembly Mounted on Outlet Box: A supporting assembly, that is intended to be mounted on an outlet box, shall be designed to accommodate mounting features on 4-inch boxes, plaster rings, and fixture studs.

D. Wall-Mounted Emergency Light Unit: Attachments for wall-mounted emergency light units shall be designed and secured for the worst expected seismic disturbance at the site.

3.3 ANCHOR BOLTS

A. Cast-In-Place: Floor or pad mounted equipment shall use cast-in-place anchor bolts or Hilti HDA anchors as indicated. One nut shall be provided on each bolt. Anchor bolts shall conform to ASTM F 1554, Grade 36. Anchor bolts shall have an embedded straight length equal to at least 12 times nominal diameter of the bolt. Anchor bolts that exceed the normal depth of equipment foundation piers or pads shall either extend into concrete floor or the foundation shall be increased in depth to accommodate bolt lengths.

B. Expansion or Chemically Bonded Anchors: Expansion or chemically bonded anchors shall not be used unless test data in accordance with ASTM E 488 has been provided verify the adequacy of the specific anchor and application. Expansion of chemically bonded anchors shall not be used to resist pull-out in overhead and wall installations.

3.4 RESILIENT VIBRATION ISOLATION DEVICES

A. Where the need for these devices is determined, based on the magnitude of the design seismic forces, selection of anchor bolts for vibration isolation devices and/or snubbers for equipment base and foundations shall follow the same procedure as in paragraph ANCHOR BOLTS, except that an equipment weight equal to three times the actual equipment weight shall be used.

3.5 SWAY BRACES FOR CONDUIT 2-1/2" TRADESIZE AND GREATER

A. Sway braces shall be provided to prevent movement of the conduits under seismic loading. Braces shall be provided in both the longitudinal and transverse directions, relative to the axis of the pipe. The bracing shall not interfere with thermal expansion requirements for the pipes as described in other sections of these specifications.

B. Transverse Sway Bracing: Install transverse sway bracing for steel and conduit. All runs (length of pipe between end joints) shall have a minimum of two transverse braces.

C. Longitudinal Sway Bracing: Longitudinal sway bracing shall be provided at 40 foot intervals unless otherwise indicated. A;; runs (length of conduit between end joints) shall have one longitudinal brace minimum. Branch lines, walls, or floors shall not be used as sway braces.

D. Vertical Runs: Run is defined as length of pipe between end joints. Vertical runs of conduit shall be braced at not more than 10-foot vertical intervals. Braces for vertical runs shall be above the center of gravity of the segment being braces. Sway braces shall not be used as sway braces.

E. Clamps and Hangers: Clamps or hangers in conduits shall be applied directly to conduit.

F. Anchor Rods, Angles, and Bars: Anchor rods, angles, and bars shall be bolted to either pipe clamps or pipe flanges at one end and cast-in-place concrete or masonry insert or clip angles bolted to the steel structure in the other end. Rods shall be solid metal or pipe as specified below. Anchor rods, angles, and bars shall not exceed lengths given in the tabulation below.

3.6 EQUIPMENT SWAY BRACING

A. Suspended Equipment: Equipment sway bracing shall be provided for items supported from overhead structural systems. Braces shall consist of angles, rods, bars, or pipes and secured at both ends with not less than ½-inch bolts. Sufficient braces shall be provided for equipment to resist a horizontal force equal to three times the weight of equipment without exceeding safe working stress of bracing components. Details of equipment bracing shall be submitted for

acceptance. In lieu of bracing with vertical supports, these items may be supported and braced with hangers inclined at 45 degrees directed up and radially away from equipment and oriented symmetrically in 90-degree intervals on the horizontal plane, bisecting the angles of each corner of the equipment, provided that supporting members are properly sized to support operating weight of equipment when hangers are inclined at a 45-degree angle.

B. Floor or Pad Mounted Equipment:
   1. Shear Resistance: Floor mounted equipment shall be bolted to the floor. Requirements for the number and installation of bolts to resist shear forces shall be in accordance with paragraph ANCHOR BOLTS.
   2. Overturning Resistance: The ratio of the overturning moment from seismic forces to the resisting moment due to gravity loads shall be used to determine if overturning forces need to be considered in the sizing of anchor bolts. Calculations shall be provided to verify the adequacy of the anchor bolts for combined shear and overturning.

END OF SECTION

SECTION 260533 - RACEWAY AND BOXES FOR ELECTRICAL SYSTEMS

PART 1 GENERAL

1.1 SUMMARY

A. Section includes conduit and tubing, surface raceways, wireways, outlet boxes, pull and junction boxes, and handholes.

1.2 RELATED SECTIONS:

A. Section 260503 - Equipment Wiring Connections.

B. Section 260526 - Grounding and Bonding for Electrical Systems.

C. Section 260529 - Hangers and Supports for Electrical Systems.

D. Section 260553 - Electrical Identification.

E. Section 262716 - Electrical Cabinets and Enclosures.

F. Section 262726 - Wiring Devices.

1.3 REFERENCES

A. American National Standards Institute:
   1. ANSI C80.1 - Rigid Steel Conduit, Zinc Coated.
   2. ANSI C80.3 - Specification for Electrical Metallic Tubing, Zinc Coated.

B. National Electrical Manufacturers Association:
   1. NEMA 250 - Enclosures for Electrical Equipment (1000 Volts Maximum).
   2. NEMA FB 1 - Fittings, Cast Metal Boxes, and Conduit Bodies for Conduit and Cable Assemblies.
   3. NEMA OS 1 - Sheet Steel Outlet Boxes, Device Boxes, Covers, and Box Supports.
   4. NEMA OS 2 - Nonmetallic Outlet Boxes, Device Boxes, Covers, and Box Supports.
   5. NEMA RN 1 - Polyvinyl Chloride (PVC) Externally Coated Galvanized Rigid Steel Conduit and Intermediate Metal Conduit.
   6. NEMA TC 2 - Electrical Polyvinyl Chloride (PVC) Tubing and Conduit.
   7. NEMA TC 3 - PVC Fittings for Use with Rigid PVC Conduit and Tubing.

1.4 SYSTEM DESCRIPTION

A. Raceway and boxes located as indicated on Drawings, and at other locations required for splices, taps, wire pulling, equipment connections, and compliance with regulatory requirements. Raceway and boxes are shown in approximate locations unless dimensioned. Provide raceway to complete wiring system.

B. Underground: Provide schedule 40 PVC. Provide pre-cast concrete or nonmetallic handholes, vaults or manholes.

C. Under Slab on Grade within the Building Perimeter: Provide schedule 40 PVC.

D. Outdoor Locations, Above Grade: Provide electrical metallic tubing. Where exposed to physical damage and heavy moisture (including roof tops) use rigid steel conduit. Provide cast metal or nonmetallic outlet, pull, and junction boxes.

E. In Slab on grade or elevated slabs: Not Permitted.

F. Interior Wet Locations: Provide rigid steel conduit. Provide cast metal outlet, junction, and pull boxes. Provide flush mounting outlet box in finished areas.

G. Concealed Dry Locations: Provide electrical metallic tubing. Provide sheet-metal boxes. Provide flush mounting outlet box in finished areas. Provide hinged enclosure for large pull boxes.

H. Exposed Dry Locations: Provide electrical metallic tubing, except where exposed to physical damage; provide rigid steel conduit. Provide sheet-metal boxes. Provide flush mounting outlet box in finished areas. Provide hinged enclosure for large pull boxes.

1.5 DESIGN REQUIREMENTS

A. Minimum Raceway Size: 1/2inch (13mm) unless otherwise specified. Comply with NEC for minimum size conduit and installation requirements.
   1. Minimum size 1/2 inch diameter for branch circuits
   2. Minimum size 3/4 inch diameter for homeruns.
   3. Minimum size for PVC conduit shall be 3/4 inch in diameter.
   4. Conduits shall be installed complete end-to-end prior to installing conductors.

1.6 SUBMITTALS

A. Refer to Section 013300 - Submittal Requirements for submittal procedures.

B. General Conditions: Submittal procedures.

C. Product Data: Submit for the following:
   1. Flexible metal conduit.
   2. Liquidtight flexible metal conduit.
   3. Nonmetallic conduit.
   4. Flexible nonmetallic conduit.
   5. Nonmetallic tubing.
   6. Raceway fittings.
   7. Conduit bodies.
   8. Surface raceway.
   9. Wireway.
   10. Pull and junction boxes.
   11. Handholes.

D. Manufacturer's Installation Instructions: Submit application conditions and limitations of use stipulated by Product testing agency specified under Regulatory Requirements. Include instructions for storage, handling, protection, examination, preparation, and installation of Product.

1.7 CLOSEOUT SUBMITTALS

A. General Conditions: Closeout procedures.

B. Project Record Documents:
   1. Record actual routing of conduits 2” and larger.
   2. Record actual locations and mounting heights of outlet, pull, and junction boxes.

1.8 DELIVERY, STORAGE, AND HANDLING

A. General Conditions: Product storage and handling requirements.

B. Protect conduit from corrosion and entrance of debris by storing above grade. Provide appropriate covering.

C. Protect PVC conduit from sunlight.

1.9 COORDINATION

A. General Conditions: Coordination and project conditions.

B. Coordinate installation of outlet boxes for equipment connected under Section 260503.

C. Coordinate mounting heights, orientation and locations of outlets mounted above counters, benches, and backsplashes.

PART 2 PRODUCTS

2.1 METAL CONDUIT

A. Rigid Steel Conduit: ANSI C80.1.

B. Intermediate Metal Conduit (IMC): Rigid steel.

C. Fittings and Conduit Bodies: NEMA FB 1; all steel fittings. Threadless fittings shall not be used.

D. Terminate rigid conduit in dry locations with two steel locknuts, one inside, one outside of the cabinet, junction box or outlet box and an insulated bushing. Bushings shall be malleable iron or steel with smooth insulating ring molded into edge of bushing to prevent damage to cable. Insulated bushings shall be 150 degree C self extinguishing thermoplastic. Provide grounding bushings on 1 ½ inch conduit and larger. Construction of bushings shall be similar to steel bushings described above except provide lugs for grounding connection.

E. Where conduits are installed underground, the threaded joints shall be sealed with a conductive joint sealing compound.

2.2 PVC COATED METAL CONDUIT

A. Product Description: NEMA RN 1; rigid steel conduit with external PVC coating, 40 mil (0.05 mm) thick.

B. Fittings and Conduit Bodies: NEMA FB 1; steel fittings with external PVC coating to match conduit.

2.3 FLEXIBLE METAL CONDUIT

A. Product Description: Interlocked steel construction.

B. Fittings: NEMA FB 1.

C. Connectors and fittings galvanized steel, threadless type with insulated throats, U.L. approved for grounding means.

2.4 LIQUIDTIGHT FLEXIBLE METAL CONDUIT

A. Product Description: Interlocked steel construction with PVC jacket.

B. Fittings: NEMA FB 1.

C. Fitting Assembly – Sealing type, with steel gland, nylon ring and ground cone inside locknut. All fittings with insulated throat, U.L. approved for grounding means.

2.5 ELECTRICAL METALLIC TUBING (EMT)

A. Product Description: ANSI C80.3; galvanized tubing.

B. Fittings and Conduit Bodies: NEMA FB 1; use insulated throat galvanized steel, rain tight, compression or set screw type. Compression type must be used in all medical facilities and in damp locations. Provide grounding bushing on 1¼ inch and larger. Zinc alloy and similar soft metal castings are not allowed.

2.6 NONMETALLIC CONDUIT

A. Product Description: NEMA TC 2; Schedule 40 PVC. Minimum sizes shall be 3/4 inch by diameter.

B. Fittings and Conduit Bodies: NEMA TC 3.

C. Fittings same material as conduit and installed with watertight joint compound recommended by manufacturer.

2.7 SURFACE METAL RACEWAY

A. Product Description: Sheet metal channel with fitted cover, suitable for use as surface metal raceway.

B. Size: As required and indicated on Drawings.

C. Finish: Gray enamel.

D. Fittings, Boxes, and Extension Rings: As required and indicated on Drawings. Furnish manufacturer's standard accessories; match finish on raceway.

2.8 SURFACE NONMETAL RACEWAY

A. Product Description: Plastic channel with fitted cover, suitable for use as surface raceway.

B. Size: As required and indicated on Drawings.

C. Finish: Gray.

D. Fittings, Boxes, and Extension Rings: As required and indicated on Drawings. Furnish manufacturer's standard accessories, finish to match raceway.

2.9 WIREWAY

A. Product Description: NEMA Type 1, General purpose, Oiltight and dust-tight. NEMA Type 3R, raintight type wireway as required to meet project conditions. Open top assembly.

B. Knockouts: NEMA Type 1, Manufacturer's standard. NEMA Type 3R – none.

C. Size: As indicated on Drawings.

D. Cover: NEMA Type 1 – removable hinged cover latches with captive screws. NEMA Type 3R – removable cover with quick release latches and full gaskets.

E. Connector: Slip-in.

F. Fittings: Lay-in type with removable top, bottom, and side; captive screws.

G. Finish: Rust inhibiting primer coating with gray enamel finish.

2.10 OUTLET BOXES

A. Sheet Metal Outlet Boxes: NEMA OS 1, galvanized steel.
   1. Luminaire and Equipment Supporting Boxes: Rated for weight of equipment supported; furnish 1/2 inch (13 mm) male fixture studs where required.
   2. Concrete Ceiling Boxes: Concrete type.

B. Wall Plates for Finished Areas: As specified in Section 262726.

C. Wall Plates for Unfinished Areas: Furnish gasketed cover.

D. Welded boxes are not acceptable.

2.11 PULL AND JUNCTION BOXES

A. Sheet Metal Boxes: NEMA OS 1, galvanized steel.

B. Hinged Enclosures: As specified in Section 262716.

PART 3 EXECUTION

3.1 EXAMINATION

A. General Conditions: Coordination and project conditions.

B. Verify outlet locations and routing and termination locations of raceway prior to rough-in.

3.2 INSTALLATION

A. Ground and bond raceway and boxes in accordance with Section 260 26.

B. Fasten raceway and box supports to structure and finishes in accordance with Section 260529.

C. Identify raceway and boxes in accordance with Section 260553.

D. Arrange raceway and boxes to maintain headroom and present neat appearance.

3.3 INSTALLATION - RACEWAY

A. Raceway routing is shown in approximate locations unless dimensioned. Route to complete wiring system.

B. Arrange raceway supports to prevent misalignment during wiring installation.

C. Support raceway using coated steel or malleable iron straps, lay-in adjustable hangers, clevis hangers, and split hangers.

D. Group related raceway; support using conduit rack. Construct rack using steel channel specified in Section 26 05 29; provide space on each for 25 percent additional raceways.

E. Do not support raceway with wire or perforated pipe straps. Remove wire used for temporary supports

F. Do not attach raceway to ceiling support wires or other piping systems.

G. Construct wireway supports from steel channel specified in Section 260529.

H. Route exposed raceway parallel and perpendicular to walls.

I. Route raceway installed above accessible ceilings parallel and perpendicular to walls.

J. Route conduit in and under slab from point-to-point.

K. Maintain clearance between raceway and piping for maintenance purposes.

L. Maintain 12 inch (300 mm) clearance between raceway and surfaces with temperatures exceeding 104 degrees F (40 degrees C).

M. Cut conduit square using saw or pipe cutter; de-burr cut ends.

N. Bring conduit to shoulder of fittings; fasten securely.

O. Join nonmetallic conduit using cement as recommended by manufacturer. Wipe nonmetallic conduit dry and clean before joining. Apply full even coat of cement to entire area inserted in fitting. Allow joint to cure for minimum 20 minutes.

P. Install conduit hubs to fasten conduit to sheet metal boxes in damp and wet locations and to cast boxes.

Q. Install no more than equivalent of three 90 degree bends (270 degrees total) between boxes. Install conduit bodies to make sharp changes in direction, as around beams. Use hydraulic one-shot bender to fabricate or factory elbows for bends in metal conduit larger than 2 inch (50 mm) size.

R. Avoid moisture traps; install junction box with drain fitting at low points in conduit system.

S. Install suitable pull string or cord in each empty raceway except sleeves and nipples.

T. Install suitable caps to protect installed conduit against entrance of dirt and moisture.

U. Surface Raceway: Install flat-head screws, clips, and straps to fasten raceway channel to surfaces; mount plumb and level. Install insulating bushings and inserts at connections to outlets and corner fittings.

V. Close ends and unused openings in wireway.

W. Use rigid metal conduit or PVC coated rigid steel conduit on all through slab transitions. Except through slab penetrations terminating at floor mounted equipment, and/or housekeeping pads may be PVC. Use rigid metal conduit elbows 2-lap wrapped with 20mil 3M Scotch wrap or tape or PVC coated rigid steel conduit on all underground/ underslab raceways 2 inches and larger.

X. Use rigid steel conduit for all motor circuits where subject to physical damage or below 10’ AFF.

Y. Intermediate grade metal conduit, (threaded only), may be used in lieu of rigid steel conduit where allowed by NEC.

Z. Use flexible conduit, “greenfield” for:
   1. Connection to vibrating equipment in dry locations between rigid conduit and connection box on equipment.

2. Final connections to equipment in dry locations.
3. Final connections to equipment requiring adjustments.
4. Final connections to recessed lighting fixtures from conduit system.
5. Connection to distribution transformers.
6. Connection to bus duct plug-in switches.
7. Maximum length 6’.

AA. Use Liquidtight flexible conduit in damp or wet locations for same circuit categories listed for flexible conduit above. Engineer will determine "damp or wet" locations if questionable.

AB. EMT shall not be installed underground and shall not be encased in concrete.

AC. Conduit must be installed high enough above lay in ceiling to permit removal of ceiling panels and light fixtures.

AD. In concrete slab on grade or elevated slabs: Conduit may penetrate slabs but will NOT be allowed to run in slabs on grade or elevated slabs.

AE. Run conduit below the roofing assembly. In accordance with NEC 300.4 conduit may not be run exposed across roof.

AF. Due to the corrosive nature of the soil all metal conduit, couplings, elbows and fittings in contact with the soil or buried below grade shall be factory coated with PVC or two-lap wrapped with 20 mil 3M Scotchwrap with Pipe Primer applied as recommended by Manufacturer. Make underground conduit fittings watertight using conductive compound tape. Do not use split couplings and similar fittings underground and exposed to moisture.

AG. Route underground conduits minimum 24" below grade.

AH. Paint conduit threads exposed to moisture with exterior grade, rust preventive silver paint after installation.

AI. Where conduit crosses expansion joints, install expansion type fittings with bonding jumper. Use expansion joint with lateral conduit movement of 4” or 8” as indicated. When both vertical and lateral movement is expected the joint shall be a 1” braided flexible coupling allowing both directional movements.

AJ. For vertical conduit runs from the first floor to upper floors, each floor deck shall be considered an expansion joint. Provide expansion type fittings to allow for up to 2" movement in addition to any thermal expansion or contraction expected to occur.

AK. Make connections to equipment away from wall with rigid or IMC conduit extensions exposed from ceiling to floor, anchored with floor flange and/or angle frame as required. Make connections to equipment with flexible conduit from tee conduit body in conduit riser.

AL. Vibrating equipment and equipment requiring adjustment, i.e.: motors, transformers, etc: make final connections with liquid-tight flexible metal conduit.

AM. Isolate conduit connections to equipment on roof from roof penetration of conduit with short section of liquid-tight flexible conduit between roof penetration and equipment to prevent leak in roof penetration due to equipment vibration.

AN. Supports shall be installed in accordance with Seismic standards. Provide necessary side braces and swing joints as required. See Spec Section 26 05 30 Seismic Protection for Electrical Equipment.

3.4 INSTALLATION - BOXES

A. Install wall mounted boxes at elevations to accommodate mounting heights as indicated on Drawings.

B. Adjust box location up to 10 feet prior to rough-in to accommodate intended purpose.

C. Orient boxes to accommodate wiring devices oriented as specified in Section 26 27 26.

D. Install pull boxes and junction boxes above accessible ceilings and in unfinished areas only.

E. In Accessible Ceiling Areas: Install outlet and junction boxes no more than 6 inches (150 mm) from ceiling access panel or from removable recessed luminaire.

F. Locate flush mounting box in masonry wall to require cutting of masonry unit corner only. Coordinate masonry cutting to achieve neat opening.

G. Do not install flush mounting box back-to-back in walls; install with minimum 6 inches (150 mm) separation. Install with minimum 24 inches (600 mm) separation in rated walls.

H. Secure flush mounting box to interior wall and partition studs. Accurately position to allow for surface finish thickness.

I. Install stamped steel bridges to fasten flush mounting outlet box between studs.

J. Install flush mounting box without damaging wall insulation or reducing its effectiveness.

K. Install adjustable steel channel fasteners for hung ceiling outlet box.

L. Do not fasten boxes to ceiling support wires or other piping systems.

M. Support boxes independently of conduit.

N. Install gang box where more than one device is mounted together. Do not use sectional box.

O. Install gang box with plaster ring for single device outlets.

P. Seal boxes during construction to prevent entrance of construction debris.

Q. Paint wiring connections in ground mounted outlets or floor outlets in wet locations with “Scotchkote” and fill box with “Duxseal”.

R. Where outlet boxes are installed in unfinished concrete walls or columns, provide 1” deep plaster ring with box and ring set in position before the concrete in poured so concrete will fill around the ring and cover plate can be installed flush with the unfinished surface. In case of brick walls, follow same procedure with mason filling around the plaster ring with mortar.

3.5 INTERFACE WITH OTHER PRODUCTS

A. Install conduit to preserve fire resistance rating of partitions and other elements, using materials and methods in accordance with project documents.

B. Route conduit through roof openings for piping and ductwork or through suitable roof jack with pitch pocket. Coordinate location with roofing installation specified.

C. Locate outlet boxes to allow luminaires positioned as indicated on Drawings.

D. Align adjacent wall mounted outlet boxes for switches, thermostats, and similar devices.

3.6 ADJUSTING

A. General Conditions: Testing, adjusting, and balancing.

B. Adjust flush-mounting outlets to make front flush with finished wall material.

C. Install knockout closures in unused openings in boxes.

3.7 CLEANING

A. General Conditions: Final cleaning.

B. Clean interior of boxes to remove dust, debris, and other material.

C. Clean exposed surfaces and restore finish.

END OF SECTION

SECTION 260553 - ELECTRICAL IDENTIFICATION

PART 1 GENERAL

1.1 SUMMARY

A. Provide and install required identification for the systems and equipment shown on the drawings and/or specified. The extent of identification is specified herein and in individual technical sections of work.

B. Coordinate with Consultant and Owner for proper equipment identification nomenclature. Nameplates must be approved by Consultant prior to ordering and installation.

C. Types of electrical identification include:
   1. Conduit labeling.
   2. Buried cable and conduit warnings.
   3. Cable/conductor identification.
   4. Operational instructions and warnings.
   5. Danger signs.
   6. Equipment/system identification labels and signs.
   7. Device plate labeling.
   8. Junction box labeling.

1.2 RELATED WORK

A. Painting of conduit and color coded painting of conduit if required. See Division 9.

1.3 SUBMITTALS

A. Refer to Section 013300 - Submittal Requirements for submittal procedures.

B. Manufacturer's Data
   1. Product specifications and installation instructions for each material and device.

C. Samples
   1. Provide for each color, lettering style and other graphic representation.

D. Labels
   1. Provide a list of labels with actual designations as they will be printed.

PART 2 PRODUCTS

2.1 ELECTRICAL IDENTIFICATION MATERIAL

A. Conform to ANSI A13.1, Table 3 for minimum size of legend letters and minimum length of color field for each raceway or cable size. Use colors prescribed by ANSI A13.7, NFPA 70 and these specifications.

B. Color-Coded Conduit Markers
   1. Manufacturer's standard preprinted, flexible or semi-rigid, permanent, plastic-sheet conduit markers, extending 360 degrees around conduits. Attach with adhesive, adhesive lap joint of marker, matching adhesive plastic tape at each end of marker, or pre-tensioned snap-on.

Lettering to indicate voltage, function of conductors in conduit and shall be 8" minimum length (i.e. ac power, dc power, fire alarm).

C. Color-Coded Plastic Tape
   1. Manufacturer's standard self-adhesive vinyl tape, minimum 3 mils thick by 1-1/2" wide.
   2. Color: Orange.

D. Underground Plastic Line Marker
   1. Manufacturer's standard permanent, bright-colored, continuous-printed plastic tape, for direct-burial service; minimum 4" wide x 4 mils thick. Printing to indicate type service of cable; with large (minimum 2-1/2") high letters.

E. Cable/Conductor Identification Bands
   1. Manufacturer's standard vinyl self-adhesive self laminating cable/conductor markers, wrap-around type; pre-numbered plastic coated, or write-on type with clear plastic self-adhesive cover flap, lettered to show circuit identification. Similar to Panduit "Instacode" or accepted equivalent by T&B, or Tyton. Refer to Section 26 05 19 Low Voltage Electrical Power Conductors and Cables.

F. Self-Adhesive Plastic Signs
   1. Manufacturer's standard, self-adhesive, pre-printed, flexible vinyl signs for operational instructions or warnings. Sizes suitable for application and visibility, with proper wording for application.
   2. Color: Orange or Yellow with black lettering.

G. Danger Signs
   1. Manufacturer's standard "DANGER" signs, baked enamel finish on 20 gage steel; standard red, black and white graphics; 14" x 10" unless 10" x 7" is largest which can be applied, or where larger size is needed for visibility use recognized explanation wording (as examples: HIGH VOLTAGE, KEEP AWAY, BURIED CABLE, DO NOT TOUCH SWITCH, DANGER-STARTS AUTOMATICALLY).

H. Engraved Signs (Nameplates)
   1. Use 1/8" thick melamine plastic laminate, complying with FS LP-387, sizes as indicated, engrave with standard letter style of sizes and wording indicated (1/4" letters minimum).
   2. Color:Black field with white letters for normal power service;
      a. Red field, white letters for emergency/standby service;
      b. Orange field, white letters for UPS service
   3. Fasteners: Self adhesive backing or double stick tape.

I. Permanent Polyester Tape:
   1. Use Permanent Metalized Polyester Tapes for Industrial purposes that are resistant to oil, solvents and chemicals, these durable tapes adhere to all surface.
   2. DYMO #18485, Black on Silver, 3/8” wide, or equivalent.

J. Lettering and Graphics
   1. Coordinate names, abbreviations and other designations used with those shown or specified. Provide numbers, lettering, and wording as indicated or required for identification and operation/maintenance.

PART 3 - EXECUTION

3.1 APPLICATION AND INSTALLATION

A. General Installation Requirements
   1. Install after completion of painting.
   2. Comply with governing regulations and requests of governing authorities for identification of electrical work.

B. Conduit Identification
   1. Use adhesive marking tape labels, Brother or Kroy labels 1" high x 12" long (min.), at 20 foot intervals to identify all conduits run exposed or located above accessible ceilings. Conduits located above non-accessible ceiling or in floors and walls shall be labeled within 3 feet of becoming accessible. Labels for multiple conduits shall be aligned. Use the following colors:
      a. Above 600 Volts: Conduit 2” and larger - Black letters on orange background indicating feeder identification and voltage. Feeders within walls: provide identification on wall surfaces directly external to the conduits. Alternate identification labels with "DANGER - HIGH VOLTAGE" warning signs of the same color.
      b. 600 Volt and Below Normal: Conduit 2” and larger - White letters on black background indicating feeder identification and voltage. Not required unless otherwise noted.
      c. 600 Volt and Below Emergency: All conduit - White or black letters on red background indicating feeder identification and voltage. Not required unless otherwise noted
      d. 600 Volt and Below UPS: All conduit - Black letters on yellow background indicating feeder identifications, circuit number and voltage. Not required unless otherwise noted
      e. Temperature Control: White or black letters on blue background indicating "TEMP. CONTROL"
      f. Ground: All conduit - White or black letters on green background
      g. Network Fiber: All conduit - Black letters on white background indicating "NETWORK FIBER."
         1) Where conduits enter or exit a panelboard, pull or junction box, switchboard, or other distribution equipment, conduit labels shall include circuit number in addition to feeder identification and voltage.
         2) For overhead conduits, place identification such that it can be read standing on the floor below.

C. Underground Cable Identification
   1. During back-filling of underground cable, install continuous underground marker, directly over buried line 6" to 8" below finished grade. Where multiple lines are buried in common trench not exceeding 24" width, install a single line marker. Install additional line markers for each increment of 24” width, i.e., 36” wide trench - 2 markers; 54” wide trench, 3 markers. Install multiple markers evenly spaced.
   2. Install line marker for every buried ductbank and/or conduits 3" diameter or larger.
   3. Electric Lines: Use red colored tape with lettering stating “CAUTION BURIED ELECTRIC LINE BELOW”.
   4. Communication Lines: Use orange colored tape with lettering stating “CAUTION COMMUNICATION LINE BELOW”.

D. Operational Identification and Warnings

1. Provide operational signs for:
   a. Switchgear
   b. Automated breakers
   c. Transfer switches
   d. Large motor starters
   e. Engine-generator
   f. All rotating equipment
   g. Decommissioned equipment to read "Retired in Place."

E. Danger Signs
   1. Provide for medium voltage switchgear, sectionalizing loop switches, etc., as shown and described herein.
   2. Provide for engine generators and other automatic equipment, i.e.: “Danger-Starts Automatically”.
   3. Provide as required by codes.

F. Engraved Plastic Laminated Signs
   1. Install on each major unit of electrical equipment in the building. Provide single line of text, 1/4" high lettering on 1" high sign (1-1/2" high where 2 lines required). Matching terminology and numbering as indicated in contract documents.
   2. Provide signs for each unit of the following categories:
      a. Electrical cabinets and enclosures: Indicate cabinet designation, voltage, phase and feeder origin.
      b. Access panel/doors to electrical facilities: Indicate room name and use.
      c. Major electrical switchgear: Indicate equipment designation, voltage, phase and feeder origin.
      d. Electrical substations: Indicate equipment designation, voltage, phase and feeder origin.
      e. Safety switches, circuit breakers and portable engine disconnects: Indicate equipment designation, voltage, phase, feeder origin and circuit number.
      f. Transformers: Indicate transformer designation, voltages, phases, feeder origin, circuit number and equipment served.
      g. Feeder cables inside pull and junction boxes and inside all switchgear at terminals indicating source and destination: Fasten with nylon ties.
      h. All equipment furnished in this Division of the specifications: Indicate equipment designation, voltage, phase, feeder origin and circuit number.

G. Install signs where indicated or most visible. Secure with at least two cadmium-plated screws. Where substrate cannot receive screws, use industrial epoxy cement to secure signs. Self-adhesive or double stick tape is acceptable. Secure with cadmium plated screws on porous surfaces.

H. Identify all conduits installed for future use.

I. Junction, Pull and Connection boxes. Identification of systems and circuits shall indicate system voltage and identity of contained circuits on outside of box cover. Color code shall be same as conduits for pressure sensitive labels. Use self-adhesive marking tape labels at exposed locations and indelible black marker at concealed boxes. All fire alarm boxes shall have red covers. All temperature control boxes shall have blue covers.

J. Branch Circuit Conductors shall be identified in each junction box and pull box with wire markers as manufactured by T & B, Panduit, 3M or Ideal to indicate panel/circuit number.

K. Junction Boxes in branch circuit wiring shall be labeled with panel and circuit numbers. Junction boxes for special systems shall be labeled with system name and other identification as directed; for example, “fire alarm-zone 1”. Where boxes are installed flush mounted in finished areas or surface mounted in unfinished areas, labeling shall be with engraved plastic nameplate as specified herein. Where boxes are installed above accessible ceilings, labeling may be neat hand written lettering with indelible marker.

L. Device Plates – switches and receptacles. Identify the panelboard and branch circuit number from which served on the front of the device plate with Permanent Polyester Clear Tape with black letters. Locate all labels at the bottom of the plate in the same location throughout.

END OF SECTION

SECTION 260573 - OVERCURRENT PROTECTIVE DEVICE COORDINATION STUDY

PART 1 - GENERAL

1.1 SUMMARY

A. Section includes short circuit and protective device coordination study encompassing portions of electrical distribution system from normal power source or sources up to and including breakers in service entrance switchboard, fuses in service entrance switchboard, main breaker in sub-distribution panels, fuses in sub-distribution panels and main breaker in each panelboard.

1.2 RELATED SECTIONS:

A. Section 260519 - Low-Voltage Electrical Power Conductors and Cables.

B. Section 262200 - Low-Voltage Transformers.

C. Section 262413 - Switchboards.

D. Section 262416 - Panelboards.

E. Section 262813 - Fuses.

F. Section 262819 - Enclosed Switches.

G. Section 262916 - Enclosed Contactors.

1.3 REFERENCES

A. Institute of Electrical and Electronics Engineers:
   1. IEEE 242 - Recommended Practice for Protection and Coordination of Industrial and Commercial Power Systems (Buff Book).

B. National Fire Protection Association:
   1. NFPA 70 - National Electrical Code.

1.4 DESIGN REQUIREMENTS

A. Complete Short Circuit and Protective Device Coordination Study to meet requirements of NFPA 70 and NEC 700.27 for selective coordination.

B. Report Preparation:
   1. Prepare study prior to ordering distribution equipment to verify equipment ratings required.
   2. Perform study with aid of computer software program.
   3. Obtain actual settings for packaged chiller and motor characteristics and for equipment incorporated into Work.
   4. Calculate short circuit interrupting and, when applicable, momentary duties for assumed 3-phase bolted fault short circuit current and phase to ground fault short circuit current at each of the following
      a. Utility supply bus.
      b. Manual transfer switch.
      c. Low-voltage switchgear.
      d. Switchboards.
      e. Distribution panelboards.
      f. Branch circuit panelboards.

g. Each other significant equipment location throughout system.

5. Starting point for study shall be at 10 milliseconds.

C. Report Contents:

1. Include the following:
   a. Calculation methods and assumptions.
   b. Base per unit value selected.
   c. One-line diagram.
   d. Source impedance data including power company system available power and characteristics.
   e. Typical calculations.
      1) Fault impedance.
      2) X to R ratios.
      3) Asymmetry factors.
      4) Motor fault contribution.
      5) Short circuit kVA.
      6) Symmetrical and asymmetrical phase-to-phase and phase-to-ground fault currents.
      7) Tabulations of calculation quantities and results.
   f. One-line diagram revised by adding actual instantaneous short circuits available.
   g. State conclusions and recommendations.
2. Prepare time-current device coordination curves graphically indicating coordination proposed for system, centered on conventional, full-size, log-log forms.
3. Prepare with each time-curve sheet complete title and one-line diagram with legend identifying specific portion of system covered by that particular curve sheet.
4. Prepare detailed description of each protective device identifying its type, function, manufacturer, and time-current characteristics. Tabulate recommended device tap, time dial, pickup, instantaneous, and time delay settings.
5. Plot device characteristic curves at point reflecting maximum symmetrical fault current to which device is exposed. Include on curve sheets the following:
   a. Power company relay characteristics.
   b. Power company fuse characteristics.
   c. Low voltage equipment circuit breaker trip device characteristics.
   d. Low voltage equipment fuse characteristics.
   e. Cable damage point characteristics.
   f. Pertinent transformer characteristics including:
      1) Transformer full load current.
      2) Transformer magnetizing inrush.
      3) ANSI transformer withstand parameters.
      4) Significant symmetrical fault current.
   g. Pertinent motor characteristics.
   h. Transfer switch characteristics.
   i. Other system load protective device characteristics.

1.5 ARC FLASH HAZARDS ANALYSIS STUDIES

A. Scope of Study

B. Determine the short-circuit current available at the designated point of contact and perform the following to provide adequate protection:

1. Calculate the flash protection boundary
2. Calculate the arc-flash incident energy.
3. Confirm the required labeling.
4. Confirm the required personal protective equipment with arc rating to provide adequate protection for personnel working on or near energized conductors or components.

C. Procedure
   1. The actual short-circuit available current is to be determined from a recent short circuit study. If the actual short-circuit is not known, calculate incident energy using the nearest transformer that would supply the fault current. The flash protection boundary will be calculated in accordance with NFPA 70E. The arc-flash incident energy is to be calculated using the equations in NFPA 70E.
      a. Provide Warning Labels on all switchboards, panelboards and motor control centers for "Arc Flash and Shock Hazard Appropriate PPE Required" listing the following:
      b. Available 3 phase Short-Circuit Current
      c. Flash Protection Boundary
      d. Incident energy at 18" expressed in cal/cm2
      e. PPE required
      f. Voltage shock hazard
      g. Limited shock approach boundary
      h. Restricted shock approach boundary
      i. Prohibited shock approach boundary

1.6 SUBMITTALS

A. Refer to Section 013300 - Submittal Requirements for submittal procedures.

B. General Conditions: Requirements for submittals.

C. Qualifications Data: Submit the following for review prior to starting study.
   1. Submit qualifications and background of firm.
   2. Submit qualifications of Professional Engineer performing study.

D. Software: Submit for review information on software proposed to be used in performing study.

E. Product Data: Submit the following:
   1. Report: Summarize results of study in report format including the following:
      a. Descriptions, purpose, basis, and scope of study.
      b. Tabulations of circuit breaker, fuse and other protective device ratings versus calculated short-circuit duties, and commentary regarding same.
      c. Protective device time versus current coordination curves, tabulations of relay and circuit breaker trip settings, fuse selection, and commentary regarding same.
      d. Fault current calculations including definition of terms and guide for interpretation of computer printout.

F. Submit copies of final report signed by professional engineer. Make additions or changes required by review comments.

1.7 QUALITY ASSURANCE

A. Maintain one copy of each document on site.

B. Use commercially available software, designed specifically for short circuit and protective device coordination studies with minimum of 5 years documented availability approved by Architect/Engineer.

C. Perform study in accordance with IEEE 242.

1.8 QUALIFICATIONS

A. Study Preparer: Company specializing in performing work of this section with minimum 5 years documented experience.

B. Perform study under direct supervision of Professional Engineer experienced in design of this Work and licensed in State of Nevada with minimum of five years experience in power system analysis.

C. Demonstrate company performing study has capability and experience to provide assistance during system start up.

1.9 PRE-INSTALLATION MEETINGS

A. General Conditions: Pre-installation meeting.

B. Convene minimum one week prior to commencing work of this section.

1.10 SEQUENCING

A. General Conditions: Requirements for sequencing.

B. Allow for review of completed study by Architect/Engineer.

C. Submit short circuit and protective device coordination study to Architect/Engineer prior to receiving final approval of distribution equipment shop drawings and prior to releasing equipment for manufacturing.

D. When formal completion of study will cause delay in equipment manufacturing, obtain approval from Architect/Engineer for preliminary submittal of study data sufficient in scope to ensure selection of device ratings and characteristics will be satisfactory.

1.11 SCHEDULING

A. General Conditions: Requirements for scheduling.

B. Schedule work to expedite collection of data to ensure completion of study for final approval of distribution equipment shop drawings prior to release of equipment for manufacturing.

1.12 COORDINATION

A. General Conditions: Requirements for coordination.

B. Coordinate work with local power company.

PART 2 PRODUCTS - NOT USED

PART 3 EXECUTION

3.1 FIELD QUALITY CONTROL

A. General Conditions: Field inspecting, testing, adjusting, and balancing.

B. Provide assistance to electrical distribution system equipment manufacturer during start up of electrical system and equipment.

C. Select each primary protective device for delta-wye connected transformer so device's characteristic or operating band is within transformer characteristics, including point equal to 58 percent of ANSI withstand point to provide secondary line-to-ground fault protection.

D. Separate transformer primary protective device characteristic curves from associated secondary device characteristics by 16 percent current margin to provide proper coordination and protection in event of secondary line-to-line faults.

E. Separate medium-voltage relay characteristic curves from curves for other devices by at least 0.4 second time margin.

3.2 ADJUSTING

A. General Conditions: Requirements for starting and adjusting.

B. Perform field adjustments of protective devices and modifications to equipment to place equipment in final operating condition. Adjust settings in accordance with approved short circuit and protective device coordination study.

END OF SECTION

SECTION 260923 - LIGHTING CONTROL DEVICES

PART 1 GENERAL

1.1 SUMMARY

A. Section Includes:
1. Remote control lighting relays.
2. Lighting contactors.
3. Switches.
4. Switch plates.
5. Occupancy sensors.
6. Photocells.
7. Photocell control unit.

1.2 RELATED SECTIONS:

A. Section 260503 - Equipment Wiring Connections: Execution requirements for electric connections specified by this section.

B. Section 260519 - Low-Voltage Electrical Power Conductors and Cables.

C. Section 260533 - Raceway and Boxes for Electrical Systems: Product requirements for raceway and boxes for placement by this section.

D. Section 260553 - Electrical Identification: Product requirements for electrical identification items for placement by this section.

E. Section 262416 - Panelboards.

F. Section 262726 - Wiring Devices: Product requirements for wiring devices for placement by this section.

1.3 REFERENCES

A. National Electrical Manufacturers Association:
1. NEMA FU 1 - Low Voltage Cartridge Fuses.
2. NEMA ICS 2 - Industrial Control and Systems: Controllers, Contractors, and Overload Relays, Rated Not More Than 2000 Volts AC or 750 Volts DC.
3. NEMA ICS 4 - Industrial Control and Systems: Terminal Blocks.
4. NEMA ICS 5 - Industrial Control and Systems: Control Circuit and Pilot Devices.
5. NEMA ICS 6 - Industrial Control and Systems: Enclosures.
6. NEMA KS 1 - Enclosed and Miscellaneous Distribution Equipment Switches (600 Volts Maximum).

1.4 SYSTEM DESCRIPTION

A. Where indicated on drawings or required by applicable code, provide automatic shutoff for lighting outside and inside building. Control shutoff by method conforming to ICC IECC.

B. Extent of lighting control system work is indicated by drawings and by the requirements of this section. It is the intent of this section to provide an integrated, energy saving lighting control system including Lighting Control Panels and Occupancy Sensors, and Daylighting Controls from a

single supplier. Contractor is responsible for confirming that the panel and sensors interoperate as a single system.

1.5 SUBMITTALS

A. Refer to Section 013300 - Submittal Requirements for submittal procedures.

B. General Conditions: Requirements for submittals.

C. Shop Drawings: Indicate dimensioned drawings of lighting control system components and accessories.
   1. One Line Diagram: Indicating system configuration indicating panels, number and type of switches or devices.
   2. Include typical wiring diagrams for each component.
   3. Detailed point to point wiring diagrams and floor plans showing occupancy and daylighting sensor locations.
   4. Provide typical mounting details for all equipment and devices.
   5. Sample calibration log.
   6. Provide Source Code and Source Code Licenses for all equipment that is computer driven. Provide Development licenses so Source Code can be examined. These Development Licenses, along with all software licenses shall become property of the Owner. Third parties will be allowed to use the software as necessary for this project.
      a. Product Data: Submit manufacturer's standard product data for each system component.
      b. Manufacturer's Installation Instructions: Submit for each system component.
      c. Manufacturer's Certificate: Certify Products meet or exceed specified requirements.

1.6 CLOSEOUT SUBMITTALS

A. General Conditions: Requirements for submittals.

B. Project Record Documents: Record the following information:
   1. Actual locations of components and record circuiting and switching arrangements.
   2. Wiring diagrams reflecting field installed conditions with identified and numbered, system components and devices.
      a. Operation and Maintenance Data:
         1) Submit replacement parts numbers.
         2) Submit manufacturer's published installation instructions and operating instructions.
         3) Recommended renewal parts list.
         4) Submit final calibration log.

1.7 QUALITY ASSURANCE

A. Manufacturers: Firms regularly engaged in the manufacture of lighting control equipment and ancillary equipment, of types and capacities required, whose products have been in satisfactory use in similar service for not less than 5 years.

B. Comply with NEC, NEMA, and FCC Emission requirements for Class A applications.

C. UL Approvals: Relay panels and accessory devices are to be UL listed under UL 916 Energy Management Equipment. Configured to order or custom relay panels shall be UL Listed under UL 508, Industrial Control Panels.

1.8 QUALIFICATIONS

A. Manufacturer: Company specializing in manufacturing products specified in this section with minimum three years documented experience.

B. The contractor shall be completely responsible for providing a system meeting this specification in its entirety. All deviations from this specification must be listed and individually signed off by the consultant.
   1. Legrand Wattstopper (Basis of design)
   2. Acuity nLight
   3. Leviton Greenmax

1.9 PRE-INSTALLATION MEETINGS

A. General Conditions: Pre-installation meeting.

B. Convene minimum one week prior to commencing work of this section.

1.10 DELIVERY, STORAGE, AND HANDLING

A. General Conditions: Requirements for transporting, handling, storing, and protecting products.

B. Accept components on site in manufacturer's packaging. Inspect for damage.

C. Protect components by storing in manufacturer's containers indoor protected from weather.

1.11 WARRANTY

A. General Conditions: Requirements for warranties.

B. Furnish five year manufacturer warranty for components.

1.12 EXTRA MATERIALS

A. General Conditions: Requirements for extra materials.

B. Furnish 2 of each switch type installed.

C. Furnish 2 of each occupancy sensor type installed.

D. Furnish 1 of each photocell type installed.

PART 2 PRODUCTS

2.1 RELAY PANELS

A. System Description:

B. Lighting Control Panels shall be UL listed and consist of the following:
   1. Enclosure/Tub: NEMA 1, NEMA 3R, or NEMA 4 as indicated on the drawings, sized to accept an interior with 24 relays and six (6) four pole contactors.
   2. Cover: Surface or Flush as required, hinged, and lockable and with restricted access to line voltage section.
   3. Interior: Barrier included for separation of high voltage (class 1) and low voltage (class 2) wiring. The interior shall include intelligence boards, power supply, mechanically latched control relays and multi-pole contactors. The interiors will include the following features:

a. Screwless, removable, plug-in connections for all low voltage terminations.
b. Each relay shall be capable of individual ON/OFF control by a low voltage switch and/or occupancy sensor input.
c. The system shall monitor true relay status; the relay status will be displayed at the onboard pilot LED and monitored by the system electronics.
d. Stagger the ON and OFF sequence of the relays.
e. Heavy Duty Relays – Mechanically latching contacts with single moving part design for improved reliability. Relays to have the following characteristics:
   1) 30 amp NEMA 410 electronic ballast rated and 20 amp tungsten, rated for 50,000 ON/OFF cycles at full load, Support #12 - #14 AWG solid or stranded wire and rated for 120, and 277 volts; 20 amp NEMA 410 electronic ballast rated and 20 amp tungsten 347 volts.
   2) 30 VAC isolated contacts for status feedback and pilot light indication.
   3) 14,000 amp short circuit current rating.

4. Contactors shall be DIN rail mounted, four pole standard, normally open or normally closed, electrically held with 120 or 277 volt coil voltage to match panel control power voltage. Contactors shall be compatible with all lighting, ballast and HID loads and be rated for 277 volt 20 amp tungsten and 600 volt 30 amp ballast loads.

C. Power Supply: Multi-voltage transformer assembly with enough power to supply all electElectricalronics, occupancy sensors, dataline switches, pilot lights, and photocells as necessary to meet the project requirements. Power supply to have internal over-current protection with automatic reset and metal oxide varistor protection.

2.2 NETWORK CLOCK

A. Provide an eight channel network clock that connects to the system using the four conductor data communications wire network.

B. The clock will support all of the energy saving features required of ASHRAE 90.1, IECC 2018, as well as all state and local energy codes.

C. The clock will provide astronomic capabilities, time delays, blink warning, daylight savings, and holiday functions and will include a battery back up for the clock function and EEPROM for program retention. Clocks that require multiple events to meet local code lighting shut off requirements shall not be allowed.

D. The clock shall allow unique scenario and time delays. Scenarios are:
   1. Scheduled ON / OFF
   2. Manual ON / Scheduled OFF
   3. Manual ON / Auto Sweep OFF (for AS-100 Switches)
   4. Astro ON / OFF (or Photo ON / OFF)
   5. Astro and Schedule ON / OFF (or Photo and Schedule ON / OFF)

E. The clock shall include system diagnostic functions to identify devices anywhere on the network dataline, and will function as a dataline switch programming tool.

F. Features
   1. Clear 8-line, 22-character per line display and a simple user interface and online help.
   2. Retains memory and time for a minimum of 10 years.

2.3 NATIVE BACNET INTEGRATION

A. Description
1. Lighting Control Panels shall have a BACnet card with the capability to modify the IP address at the job site. The controller shall be furnished with all hardware/software required to field modify the IP address.
2. BACnet card shall allow interface with the direct digital control system via BACnet / MSTP protocol.

2.4 ETHERNET MULTI-USER CONNECTIVITY - WEBLINK

A. System Description
1. A network appliance will provide multi-user, simultaneous access to the lighting system using standard TCP/IP and the manufacturer's software.
2. The network appliance will include the following hardware:
   a. Ethernet, Serial and Parallel port, optional 56K BAUD internal modem, Video graphics card.

B. Features
1. Multiple users (each with a licensed copy of the manufacturer's software will be able to simultaneously connect to the IP address of the WebLink.
2. Users may be connected via an Intranet, or Internet depending upon network security limitations.
3. A single user may connect using the manufacturer's software, via the internal modem of the WebLink.
4. The WebLink will provide all the features of a direct connected site to the simultaneous users.

C. 365 day and Events Scheduler
1. 365-day event scheduling will allow "Events" to be defined as a series of commands to allow a preprogrammed timed sequence to occur by selecting the start time and stop time of the event. Events may be programmed as a repeating schedule with specific start and ending times or as one-time scheduled events.
2. 365-day programming will simplify single day activities for schools, retail applications, or event centers. The schedules may be programmed up to two years in advance.

2.5 LOW VOLTAGE SWITCHES / PLATES

A. Description
1. Low voltage switches shall provide a momentary signal to allow individual relay control or group control using the Group Switching card. Switches shall be available in 1 to 6 buttons. Switches shall mount in single-gang back boxes, use multiple gang boxes where multiple switches are grouped.

B. Features
1. Switches shall be constructed of non-breakable Lexan on all exposed parts and shall include a matching screwless Lexan wall plate.
2. Individual buttons shall have a removable clear cover to allow standard 9 mm (3/8 inch) labeling tape to be used to identify the controlled loads
3. Each switch shall use an LED pilot light for the individual buttons to indicate status of the controlled relay or group of relays.

2.6 OCCUPANCY SENSORS AND POWER PACKS

A. Occupancy Sensors
   1. All products listed shall integrate fully with the Lighting Control Panels and daylighting controls listed in the project specifications.
   2. Ceiling sensors.
   3. Wall sensors.
   4. Dual technology sensors shall:
      a. Either corner mounted or ceiling mounted in such a way as to minimize coverage in unwanted areas
      b. Passive infrared and ultrasonic or microphonic technologies for occupancy detection. Products that react to noise or ambient sound shall have sophisticated filtering technology to masks out and recognize noises made by the building or the environment such as the sound of the HVAC system, air currents, equipment, cars driving by, etc. They shall also have automatic gain control to dynamically self-adapt to the environment by filtering out constant background noise.
   5. Ultrasonic sensors shall:
      a. Utilize Advanced Signal Processing to adjust the detection threshold dynamically to compensate for constantly changing levels of activity and airflow throughout controlled space.
      b. Have an ultrasonic operating frequency that is crystal controlled at 25 kHz within ± 0.005% tolerance, 32 kHz within ± 0.002% tolerance, or 40 kHz ± 0.002% tolerance to assure reliable performance and eliminate sensor cross-talk. Sensors using multiple frequencies are not acceptable.
   6. All sensors shall be capable of operating normally with electronic ballasts, PL lamp systems and rated motor loads.
   7. Coverage of sensors shall remain constant after sensitivity control has been set. No automatic reduction shall occur in coverage due to the cycling of air conditioner or heating fans.
   8. All sensors shall have readily accessible, user adjustable settings for time delay and sensitivity. Settings shall be located on the sensor (not the control unit) and shall be recessed to limit tampering.
   9. In the event of failure, a bypass manual override shall be provided on each sensor. When bypass is utilized, lighting shall remain on constantly or control shall divert to a wall switch until sensor is replaced. This control shall be recessed to prevent tampering.
   10. All sensors shall provide an LED as a visual means of indication at all times to verify that motion is being detected during both testing and normal operation.

B. Products
   1. Wall Mounted Single Level Motion Sensor Switch.
   2. Wall Mounted Bi-Level Motion Sensor Switch.
   3. Wall Mounted Bi-Level Motion Sensor Switch with Daylight Sensor.
   4. Ceiling Mounted Dual Technology Occupancy Sensor with Power Pack.
   5. Daylight Sensor in Stairway noted..
   6. Daylight Sensor in Main Lobby.
   7. Emergency Lighting Control Unit.

C. Circuit Control Hardware – (Power Packs)

1. Control Units - For ease of mounting, installation and future service, control unit(s) shall be able to externally mount through a 1/2" knock-out on a standard electrical enclosure and be an integrated, self-contained unit consisting internally of an isolated load switching control relay and a transformer to provide low-voltage power. Control unit shall provide power to a minimum of two (2) sensors.
2. Relay Contacts shall have ratings of:
   a. 13A - 120 VAC Tungsten
   b. 20A - 120 VAC Ballast
   c. 20A - 277 VAC Ballast
   d. 20A – 347 VAC Ballast

D. Control wiring between sensors and control units shall be Class II, 18-20 AWG, stranded U.L. Classified, PVC insulated or TEFLON jacketed cable suitable for use in plenums, where applicable.
   1. Minimum acceptable wire gauge from the circuit control hardware relays shall be #14 AWG.

2.7 EXTERIOR PHOTOCELLS

A. Each photocell shall be mounted in the appropriate location for measuring the available daylight. Each photocell will have a separate control/calibration module mounted separately and in an accessible location.

B. The control module shall:
   1. Have a separate trip point settings. These settings will be entered via easily readable dial switches.
   2. Have a fixed deadband of 10%.
   3. Have a starting delay.
   4. Be suitable for panel mounting.
   5. Be UL listed.

PART 3 - EXECUTION

3.1 INSTALLATION

A. Mount switches, occupancy sensors, and photocells as indicated on Drawings and by manufacturer’s requirements.

B. Install wiring in accordance with Section 260519.

C. Use only properly color coded, stranded wire. Install wire sizes as indicated on Drawings. Install wire in conduit in accordance with Section 260533.

D. Label each low voltage wire clearly indicating connecting relay panel. Refer to Section 260553.

E. Identify power wiring with circuit breaker number controlling load. When multiple circuit breaker panels are feeding into relay panel, label wires to indicate originating panel designation.

F. Label each low voltage wire with relay number at each switch or sensor.

3.2 SUPPORT SERVICES

A. Service Description:

B. System Startup

1. Manufacturer shall have a factory authorized technician confirm proper installation and operation of all system components. The startup requirement is intended to verify:
   a. That all occupancy sensors are located, installed, and adjusted as intended by the factory and the contract documents.
   b. The occupancy sensors are operating within the manufacturers specifications.
   c. The sensors and relay panels interact as a complete and operational system to meet the design intent.
2. Manufacturer to provide minimum of one day factory start-up at site. Additional days shall be included as required
3. Manufacturer to provide a written statement verifying that the system meets the above requirements.

C. Training
1. Manufacturer shall provide factory authorized technician to train owner personnel in the operation, programming and maintenance of the lighting control system including all occupancy sensors and controls.
2. Manufacturer shall provide minimum of one day on site training.
3. Training shall be video recorded and provided to Owner on a DVD.

D. Factory Commissioning
1. Manufacturer shall provide factory authority technician for on site Commissioning Agent Testing. Number of days on-site shall be as necessary based on number of components and systems.
2. Factory Commissioning shall include:
   a. Fine tune occupancy sensors.
   b. Program daylight harvesting.
   c. Program relay panels,
   d. Program dimming panels.
   e. Fine tune dimming controls.

3.3 ADJUSTING AND CALIBRATING

A. General Conditions: Requirements for starting and adjusting.

B. Test each system component after installation to verify proper operation.

C. Test relays, contactors, and switches after installation to confirm proper operation.

D. Confirm correct loads are recorded on directory card in each panel.

CONTROL TYPE	COMMISSIONING AND CALIBRATION
Occupancy sensors and photosensors	Ensure that the sensor is correctly placed and oriented per the specifications and/ or construction drawings. If unanticipated obstructions are present, it may be necessary to adjust the sensor location and orientation.

Occupancy sensors	Adjust the sensitivity and time delay of the occupancy sensor, and test to ensure it provides appropriate response. For optimal user acceptance, energy savings and lamp life, set the time delay initially for a minimum of 15 minutes (NEMA recommendation).
Daylight harvesting	All furnishings and interior finishes and materials should be installed before calibrating the sensors. Adjust the photosensor to determine the threshold for switching based on detected light level. It may be helpful to calibrate under normal daylight conditions and dusk conditions (it may be possible to close window blinds to approximate dusk). Record the calibration adjustments if possible and replicate in similar spaces.
Automatic shut-off (“sweep off”)	Input the schedule into the programmable scheduling controls, incorporating weekday, weekend and holiday operating times. Ensure that overrides work and that they are located conveniently for users.
Dimming systems	It is recommended that fluorescent lamps be “seasoned” before dimming by operating them at full light output, so as to ensure uniform dimming performance across all lamps in a system. Recommendations vary, but NEMA recommends seasoning fluorescent linear lamps overnight, or about 12 hours, and compact fluorescent lamps for 100 hours, prior to dimming. Consult the lamp manufacturer to determine whether the select lamp type must be seasoned and for how long prior to dimming.
Manual dimming	Ensure correct placement of the dimmer per the construction drawings. Adjust the upper limit of the dimming range according to the task being performed, and set the lower limit of the range so that the minimum light level meets the use/application of the space.

END OF SECTION

SECTION 262200 - LOW-VOLTAGE TRANSFORMERS

PART 1 GENERAL

1.1 SUMMARY

A. Section Includes:
   1. Two-winding transformers.

1.2 RELATED REQUIREMENTS:

A. Section 26 05 26 - Grounding and Bonding for Electrical Systems.

B. Section 26 05 29 - Hangers and Supports for Electrical Systems.

C. Section 26 05 33 - Raceway and Boxes for Electrical Systems.

D. Section 260553 - Electrical Identification.

1.3 REFERENCE STANDARDS

A. National Electrical Manufacturers Association:
   1. NEMA ST 1 - Specialty Transformers (Except General Purpose Type).
   2. NEMA ST 20 - Dry Type Transformers for General Applications.

B. International Electrical Testing Association:
   1. NETA ATS - Acceptance Testing Specifications for Electrical Power Distribution Equipment and Systems.

1.4 SUBMITTALS

A. Refer to Section 013300 - Submittal Requirements for submittal procedures.

B. General Conditions: Submittal procedures.

C. Product Data: Submit outline and support point dimensions of enclosures and accessories, unit weight, voltage, kVA, and impedance ratings and characteristics, tap configurations, insulation system type, and rated temperature rise.

D. Test and Evaluation Reports: Indicate loss data, efficiency at 25, 50, 75 and 100 percent rated load, and sound level.

E. Source Quality Control Submittals: Indicate results of factory tests and inspections.

F. Field Quality Control Submittals: Indicate results of Contractor furnished tests and inspections.

1.5 CLOSEOUT SUBMITTALS

A. General Conditions: Closeout procedures.

B. Record Documentation: Record actual locations of transformers.

1.6 QUALIFICATIONS

A. Manufacturer: Company specializing in manufacturing products specified in this section with minimum three years' experience.

1.7 DELIVERY, STORAGE, AND HANDLING

A. General Conditions: Product storage and handling requirements.

B. Store in clean, dry space. Maintain factory wrapping or provide additional canvas or plastic cover to protect units from dirt, water, construction debris, and traffic.

C. Handle in accordance with manufacturer's written instructions. Lift only with lugs provided. Handle carefully to avoid damage to transformer internal components, enclosure, and finish.

PART 2 PRODUCTS

2.1 TWO-WINDING TRANSFORMERS

A. Manufacturer List:
   1. Eaton Electrical.
   2. General Electrical.
   3. Square D.
   4. Siemens.

B. Substitution Limitations:
   1. General Conditions: Requirements for substitutions for other manufacturers and products.

C. Description: NEMA ST 20, factory-assembled, air-cooled, dry type transformers, ratings as indicated on Drawings.

D. Operation:
   1. Primary Voltage: 480 volts, 3 phase.
   2. Secondary Voltage: 208Y/120 volts, 3 phase.
   3. Insulation system and average winding temperature rise for rated kVA as follows:
   4. 1-15 kVA: Class 185 with 115 degrees C rise.
   5. 16-500 kVA: Class 220 with 150 degrees C rise.
   6. Case temperature: Do not exceed 35 degrees C rise above ambient at warmest point at full load.
   7. Winding Taps:
      a. Transformers Less than 15 kVA: Two 5 percent below rated voltage, full capacity taps on primary winding.
      b. Transformers 15 kVA and Larger: NEMA ST 20.
   8. Sound Levels: NEMA ST 20.
   9. Basic Impulse Level: 10 kV for transformers less than 300 kVA, 30 kV for transformers 300 kVA and larger.
   10. Mounting:
      a. 1-15 kVA: Suitable for wall mounting.
      b. 16-75 kVA: Suitable for wall, floor, or trapeze mounting.
      c. Larger than 75 kVA: Suitable for floor or trapeze mounting.

E. Materials:
   1. Ground core and coil assembly to enclosure by means of visible flexible copper grounding strap.
   2. Coil Conductors: Continuous copper windings with terminations brazed or welded.

3. Enclosure: NEMA ST 20, Type 1 or Type 3R ventilated as required to meet service conditions. Furnish lifting eyes or brackets.

F. Fabrication:
1. Isolate core and coil from enclosure using vibration-absorbing mounts.
2. Nameplate: Include transformer connection data and overload capacity based on rated allowable temperature rise.

2.2 SOURCE QUALITY CONTROL

A. General Conditions: Testing, inspection and analysis requirements.

B. Production test each unit according to NEMA ST20.

PART 3 EXECUTION

3.1 EXAMINATION

A. General Conditions: Requirements for installation examination.

B. Verify mounting supports are properly sized and located including concealed bracing in walls.

3.2 PREPARATION

A. General Conditions: Requirements for installation preparation.

B. Provide concrete pads under provisions of Section 033000.

3.3 INSTALLATION

A. Set transformer plumb and level.

B. Use flexible conduit, in accordance with Section 260533, 2 feet (600 mm) minimum length, for connections to transformer case. Make conduit connections to side panel of enclosure.

C. Support transformers in accordance with Section 260529.
1. Mount wall-mounted transformers using integral flanges or accessory brackets furnished by manufacturer.
2. Mount floor-mounted transformers on vibration isolating pads suitable for isolating transformer noise from building structure.
3. Mount trapeze-mounted transformers as indicated on Drawings.

D. Provide seismic restraints.

E. Install grounding and bonding in accordance with Section 260526.

3.4 FIELD QUALITY CONTROL

A. General Conditions: Requirements for inspecting and testing.

B. Inspect and test in accordance with NETA ATS, except Section 4.

C. Perform inspections and tests listed in NETA ATS, Section 7.2.1.

3.5 ADJUSTING

A. General Conditions: Testing, adjusting, and balancing.

B. Measure primary and secondary voltages and make appropriate tap adjustments.

3.6 CLEANING

A. General Conditions: Requirements for cleaning.

B. Clean existing transformers to remain or to be reinstalled.

END OF SECTION

SECTION 262413 - SWITCHBOARDS

PART 1 GENERAL

1.1 SUMMARY

A. Section includes main and distribution switchboards.

1.2 RELATED SECTIONS:

A. Section 260526 - Grounding and Bonding for Electrical Systems.

B. Section 260553 - Electrical Identification.

C. Section 262813 - Fuses.

D. Section 263556 - Surge Protective Devices.

1.3 REFERENCES

A. American National Standards Institute:
   1. ANSI C12.1 - Code for Electricity Metering.
   2. ANSI C39.1 - Requirements, Electrical Analog Indicating Instruments.

B. Institute of Electrical and Electronics Engineers:
   1. IEEE C57.13 - Standard Requirements for Instrument Transformers.
   2. IEEE C62.41 - Recommended Practice on Surge Voltages in Low-Voltage AC Power Circuits.

C. National Electrical Manufacturers Association:
   1. NEMA FU 1 - Low Voltage Cartridge Fuses.
   2. NEMA KS 1 - Enclosed and Miscellaneous Distribution Equipment Switches (600 Volts Maximum).
   3. NEMA PB 2 - Deadfront Distribution Switchboards.
   4. NEMA PB 2.1 - General Instructions for Proper Handling, Installation, Operation, and Maintenance of Deadfront Distribution Switchboards Rated 600 Volts or Less.

D. International Electrical Testing Association:
   1. NETA ATS - Acceptance Testing Specifications for Electrical Power Distribution Equipment and Systems.

E. Underwriters Laboratories Inc.:
   1. UL 489 - Molded-Case Circuit Breakers, Molded-Case Switches, and Circuit-Breaker Enclosures.
   2. UL 891 - Dead-Front Switchboards.

1.4 SUBMITTALS

A. Refer to Section 013300 - Submittal Requirements for submittal procedures.

B. General Conditions: Submittal procedures.

C. Shop Drawings: Indicate front and side views of enclosures with overall dimensions shown; conduit entrance locations and requirements; nameplate legends; size and number of bus bars for each phase, neutral, and ground; and switchboard instrument details.

D. Product Data: Submit electrical characteristics including voltage, frame size and trip ratings, fault current withstand ratings, and time-current curves of equipment and components.

E. Test Reports: Indicate results of factory production and field tests.

1.5 CLOSEOUT SUBMITTALS

A. General Conditions: Closeout procedures.

B. Project Record Documents: Record actual locations, configurations, and ratings of switchboards and their components on single line diagrams and plan layouts.

C. Operation and Maintenance Data: Submit spare parts data listing; source and current prices of replacement parts and supplies; and recommended maintenance procedures and intervals.

1.6 QUALIFICATIONS

A. Manufacturer: Company specializing in manufacturing products specified in this section with minimum three years [documented] experience.

1.7 DELIVERY, STORAGE, AND HANDLING

A. General Conditions: Requirements for transporting, handling, storing, and protecting products.

B. Deliver in 48 inch maximum width shipping splits, individually wrapped for protection and mounted on shipping skids.

C. Accept switchboards on site. Inspect for damage.

D. Store in clean, dry space. Maintain factory wrapping or provide additional canvas or plastic cover to protect units from dirt, water, construction debris, and traffic.

E. Handle in accordance with NEMA PB 2.1. Lift only with lugs provided. Handle carefully to avoid damage to switchboard internal components, enclosure, and finish.

1.8 ENVIRONMENTAL REQUIREMENTS

A. General Conditions.

B. Conform to NEMA PB 2 service conditions during and after installation of switchboards.

1.9 FIELD MEASUREMENTS

A. Verify field measurements prior to fabrication.

1.10 SEQUENCING

A. General Conditions: Work sequence.

B. Sequence Work to avoid interferences with building finishes and installation of other products.

1.11 MAINTENANCE MATERIALS

A. General Conditions: Spare parts and maintenance products.

B. Furnish two of each key.

1.12 EXTRA MATERIALS

A. General Conditions: Spare parts and maintenance products.

PART 2 PRODUCTS

2.1 DISTRIBUTION SWITCHBOARDS

A. Manufacturers:
   1. Eaton Electrical.
   2. GE Electric Company.
   3. Siemens Energy & Automation, Inc.
   4. Square D Company.
   5. Substitutions: General Conditions.

B. Product Description: NEMA PB 2, enclosed switchboard with electrical ratings and configurations as indicated on Drawings.

C. Service Conditions:
   1. Temperature: 104 degrees F.
   2. Altitude: 4500 feet.

D. Device Mounting:
   1. Main Section: Individually mounted and compartmented.
   2. Distribution Section: Individually mounted and compartmented.
   3. Auxiliary Section: Individually mounted.

E. Bus:
   1. Material: Copper, standard size.
   2. Connections: Bolted, accessible from front for maintenance.
   3. Insulation: Fully insulate bus bars. Do not reduce spacing of insulated bus.
   4. The phase and neutral through-bus shall have an ampacity as shown on the plans. For 4-wire systems, the neutral shall be of equivalent ampacity as the phase bus bar. Tapered bus in not acceptable. Provide full height vertical bus in all sections with minimum number of spaces as shown on Single Line Diagram. Full provisions for the addition of future sections shall be provided. Bussing shall include all necessary hardware to accommodate splicing for future additions.

F. Ground Bus: extend length of switchboard.

G. Minimum Short Circuit Rating: 65,000 symmetrical amperes rms, fully rated, or as indicated.

H. Line and Load Terminations: Accessible from front only of switchboard, suitable for conductor materials and sizes as indicated on Drawings.

I. Utility Metering Compartment: Furnish metering transformer compartment for Utility Company's use, in accordance with Utility Company requirements.

J. Pull Section: Width, depth and height to match switchboard. Arrange as indicated on Drawings. Sized per utility requirements.

K. Pull Box: Removable top and sides, same construction as switchboard. Furnish insulating, fire-resistive bottom with separate openings for each circuit to pass into switchboard.

L. Future Provisions: Fully equip spaces for future devices with bussing and bus connections, insulated and braced for short circuit currents. Furnish continuous current rating as indicated on Drawings.

M. Enclosure: Type as shown on plans. All Front covers shall be screw removable with a single tool and all doors shall be hinged with removable hinge pins.

N. Align sections at front and rear.

O. Finish: Manufacturer's standard light gray enamel over external surfaces. Coat internal surfaces with minimum one coat corrosion-resisting paint, or plate with cadmium or zinc.

2.2 MOLDED CASE CIRCUIT BREAKER

A. Product Description: UL 489, molded-case circuit breaker.

B. Field-Adjustable Trip Circuit Breaker: Circuit breakers with frame sizes 250 amperes and larger have mechanism for adjusting continuous current setting for automatic operation.

C. Current Limiting Circuit Breaker: Circuit breaker indicated as current-limiting have automatically-resetting current limiting elements in each pole. Let-through Current and Energy: Less than permitted for same size Class RK-5 fuse.

D. Solid-State Circuit Breaker (for all breakers 800 amp and larger): Electronic sensing, timing, and tripping circuits for adjustable current settings; ground fault trip with zero sequence type ground fault sensor (where indicated); instantaneous trip; adjustable short time trip; and energy-reducing active arc flash mitigation system (1200 amp and larger only).

E. Current Limiter: Designed for application with molded case circuit breaker.
   1. Coordinate limiter size with trip rating of circuit breaker to prevent nuisance tripping and to achieve interrupting current rating specified for circuit breaker.
   2. Interlocks trip circuit breaker and prevent closing circuit breaker when limiter compartment cover is removed or when one or more limiter is not in place or has operated.

F. Accessories: Conform to UL 489.
   1. Shunt Trip Device: As shown on plans.
   2. Undervoltage Trip Device: All main breakers.
   3. Auxiliary Switch: As shown on plans.
   4. Alarm Switch: As shown on plans.
   5. Handle Lock: Provisions for padlocking.
   6. Insulated Grounding Lug: In each enclosure.

2.3 GROUND FAULT DEVICES

A. Ground Fault Sensor: Zero sequence type.

B. Ground Fault Relay: Adjustable ground fault sensitivity from 200 to 1200 amperes, time delay adjustable from 0 to 15 seconds. Furnish monitor panel with lamp to indicate relay operation, TEST and RESET control switches.

2.4 SURGE PROTECTIVE DEVICES

A. Product Description: IEEE C62.41, factory-mounted transient voltage surge suppressor, selected to meet requirements for medium exposure and to coordinate with system circuit voltage. See specification section 26 35 56.

2.5 SOURCE QUALITY CONTROL

A. Furnish shop inspection and testing in accordance with NEMA PB 2.

PART 3 EXECUTION

3.1 EXAMINATION

A. General Conditions: Coordination and project conditions.

B. Verify surface is suitable for switchboard installation.

3.2 PREPARATION

A. Concrete Pad: Comply with requirements of Section 03 30 00.

3.3 INSTALLATION

A. Install in accordance with NEMA PB 2.1.

B. Tighten accessible bus connections and mechanical fasteners after placing switchboard.

C. Install engraved plastic nameplates in accordance with Section 26 05 53.

D. Install breaker circuit directory.

E. Ground and bond switchboards in accordance with Section 26 05 26.

3.4 FIELD QUALITY CONTROL

A. General Conditions: Field inspecting, testing, adjusting, and balancing.

B. Inspect and test in accordance with NETA ATS, except Section 4.

C. Perform inspections and tests listed in NETA ATS, Section 7.1.

D. Measure, using a Megger, the insulation resistance of each bus section phase-to-phase and phase-to-ground for one minute each, at minimum test voltage of 1000 VDC; minimum acceptable value for insulation resistance is 1 megohms. Note: Refer to manufacturer's literature for specific testing procedures.

3.5 ADJUSTING

A. General Conditions: Testing, adjusting, and balancing.

B. Adjust operating mechanisms for free mechanical movement.

C. Tighten bolted bus connections.

D. Adjust circuit breaker trip and time delay settings to values as instructed by Architect/Engineer.

3.6 CLEANING

A. General Conditions: Final cleaning.

B. Touch up scratched or marred surfaces to match original finish.

END OF SECTION

SECTION 262416 - PANELBOARDS

PART 1 GENERAL

1.1 SUMMARY

A. Section Includes:
   1. Distribution and branch circuit panelboards.
   2. Electronic grade branch circuit panelboards.

1.2 RELATED REQUIREMENTS:

A. Section 260526 - Grounding and Bonding for Electrical Systems.

B. Section 260553 - Electrical Identification.

C. Section 262813 - Fuses.

1.3 REFERENCE STANDARDS

A. Institute of Electrical and Electronics Engineers:
   1. IEEE C62.41 - Recommended Practice on Surge Voltages in Low-Voltage AC Power Circuits.

B. National Electrical Manufacturers Association:
   1. NEMA FU 1 - Low Voltage Cartridge Fuses.
   2. NEMA ICS 2 - Industrial Control and Systems: Controllers, Contactors, and Overload Relays, Rated Not More Than 2000 Volts AC or 750 Volts DC.
   3. NEMA ICS 5 - Industrial Control and Systems: Control Circuit and Pilot Devices.
   4. NEMA KS 1 - Enclosed and Miscellaneous Distribution Equipment Switches (600 Volts Maximum).
   5. NEMA PB 1 - Panelboards.
   6. NEMA PB 1.1 - General Instructions for Proper Installation, Operation, and Maintenance of Panelboards Rated 600 Volts or Less.

C. International Electrical Testing Association:
   1. NETA ATS - Acceptance Testing Specifications for Electrical Power Distribution Equipment and Systems.

D. National Fire Protection Association:
   1. NFPA 70 - National Electrical Code.

E. Underwriters Laboratories Inc.:
   1. UL 50 - Cabinets and Boxes
   2. UL 67 - Safety for Panelboards.
   3. UL 489 - Molded-Case Circuit Breakers, Molded-Case Switches, and Circuit-Breaker Enclosures.
   4. UL 1283 - Electromagnetic Interference Filters.
   5. UL 1449 - Transient Voltage Surge Suppressors.
   6. UL 1699 - Arc-Fault Circuit Interrupters.

1.4 SUBMITTALS

A. Refer to Section 013300 - Submittal Requirements for submittal procedures.

B. General Conditions: Requirements for submittals.

C. Product Data: Submit catalog data showing specified features of standard products.

D. Shop Drawings: Indicate outline and support point dimensions, voltage, main bus ampacity, integrated short circuit ampere rating, circuit breaker and fusible switch arrangement and sizes.

E. Source Quality control submittals: Indicate results of factory tests and inspections.

F. Field Quality Control Submittals: Indicate results of Contractor furnished tests and inspections.

1.5 CLOSEOUT SUBMITTALS

A. General Conditions: Requirements for submittals.

B. Project Record Documents: Record actual locations of panelboards and record actual circuiting arrangements.

C. Operation and Maintenance Data: Submit spare parts listing; source and current prices of replacement parts and supplies; and recommended maintenance procedures and intervals.

1.6 MAINTENANCE MATERIAL SUBMITTALS

A. General Conditions: Requirements for maintenance products.

B. Extra Stock Materials:
   1. Furnish two of each panelboard key. Panelboards keyed alike.

1.7 QUALITY ASSURANCE

A. Qualifications
   1. Manufacturer: Company specializing in manufacturing products specified in this section with minimum three years documented experience.

PART 2 PRODUCTS

2.1 DISTRIBUTION PANELBOARDS

A. Manufacturer List:

Manufacturer	Lighting Panels rated 240V	Lighting Panels rated 480/277V	Distribution Panels rated 600V
Square D	NQOD	NF	I-Line
GE	AQ	AE	Spectra
Eaton Cutler-Hammer	Pow-R-Line 1A	Pow-R-Line 2A	Pow-R-Line 4B
Siemens	S1	S2	S5

B. Substitution Limitations:
   1. General Conditions: Requirements for substitutions for other manufacturers and products.

C. Description: NEMA PB 1, circuit breaker type panelboard.

D. Operation:
   1. Service Conditions:
      a. Temperature: 100 degrees F.
      b. Altitude: 4500 feet.
      c. Minimum integrated short circuit rating: 10,000 amperes rms symmetrical for 208 volt panelboards; 14,000 amperes rms symmetrical for 480 volt panelboards, or as indicated on Drawings.

E. Materials
   1. Panelboard Bus: Copper, current carrying components, ratings as indicated on Drawings. Furnish copper ground bus in each panelboard.
   2. Molded Case Circuit Breakers: UL 489, circuit breakers with integral thermal and instantaneous magnetic trip in each pole. Furnish circuit breakers UL listed as Type HACR for air conditioning equipment branch circuits.
   3. Molded Case Circuit Breakers with Current Limiters: UL 489, circuit breakers with replaceable current limiting elements, in addition to integral thermal and instantaneous magnetic trip in each pole.
   4. Current Limiting Molded Case Circuit Breakers: UL 489, circuit breakers with integral thermal and instantaneous magnetic trip in each pole, coordinated with automatically resetting current limiting elements in each pole. Interrupting rating 100,000 symmetrical amperes, let-through current and energy level less than permitted for same size NEMA FU 1, Class RK-5 fuse.
   5. Surge Suppressers: Integrated in panelboard, refer to Section 26 35 53. (Where indicated)
   6. Enclosure: NEMA PB 1, Type 1or as required to meet service conditions.
   7. Cabinet Front: Surface door-in-door type, fastened with concealed trim clamps, hinged door with flush lock and plastic directory card holder. Fronts shall have cylindrical tumbler type lock with catch and spring-loaded door pull. All lock assemblies shall be keyed alike.
   8. Circuit breaker accessories: Trip units and auxiliary switches as indicated on drawings.
   9. Solid-State Circuit Breaker (for all breakers 800 amp and larger): Electronic sensing, timing, and tripping circuits for adjustable current settings; ground fault trip with zero sequence type ground fault sensor (where indicated); instantaneous trip; adjustable short time trip; and energy-reducing active arc flash mitigation system (1200 amp and larger only).

F. Finishes
   1. Manufacturer's standard gray enamel.

2.2 BRANCH CIRCUIT PANELBOARDS

A. Manufacturer List:

Manufacturer	Lighting Panels rated 240V	Lighting Panels rated 480/277V	Distribution Panels rated 600V
Square D	NQOD	NF	I-Line
GE	AQ	AE	Spectra
Eaton Cutler-Hammer	Pow-R-Line 1A	Pow-R-Line 2A	Pow-R-Line 4B
Siemens	S1	S2	S5

B. Substitution Limitations:
   1. General Conditions: Requirements for substitutions for other manufacturers and products.

C. Description: NEMA PB1, circuit breaker type, lighting and appliance branch circuit panelboard.

D. Materials:
   1. Panelboard Bus: Copper, current carrying components, ratings as indicated on Drawings. Furnish copper ground bus in each panelboard.
   2. For non-linear load applications subject to harmonics furnish 200 percent rated, plated copper, solid neutral.
   3. Minimum Integrated Short Circuit Rating: 10,000 amperes rms symmetrical for 208 volt panelboards; 14,000 amperes rms symmetrical for 480 volt panelboards, or as indicated on Drawings.
   4. Molded Case Circuit Breakers: UL 489, bolt-on type thermal magnetic trip circuit breakers, with common trip handle for all poles, listed as Type SWD for lighting circuits, Type HACR for air conditioning equipment circuits, Class A ground fault interrupter circuit breakers as indicated on Drawings. Provide UL class 760 arc-fault interrupter circuit breakers as indicated on Drawings. Do not use tandem circuit breakers.
   5. Current Limiting Molded Case Circuit Breakers: UL 489, circuit breakers with integral thermal and instantaneous magnetic trip in each pole, coordinated with automatically resetting current limiting elements in each pole. Interrupting rating 100,000 symmetrical amperes, let-through current and energy level less than permitted for same size NEMA FU 1, Class RK-5 fuse.
   6. Surge Suppresser: Integrated in panelboard, refer to Section 26 35 56.(Where Indicated)
   7. Enclosure: NEMA PB 1, Type 1 or Type 3R as required to meet service conditions.
   8. Split solid neutral shall be plated and located in the main compartment up to 225 amperes so incoming neutral cable may be of the same length. UL listed panelboards with 200% rated solid neutral shall be plated copper for non-linear load applications. Panelboards shall be marked for non-linear load applications.
   9. Interior trim shall be of dead-front construction to shield user from energized parts. Dead-front trim shall have pre-formed twist-outs covering unused mounting space.
   10. Breaker handle and faceplate shall indicate rated ampacity. Standard construction circuit breakers shall be UL listed for reverse connection without restrictive line or load markings. Circuit breaker handle accessories shall provide provisions for locking handle in the OFF position.

E. Cabinet Front: Door-in-door Flush or Surface cabinet front as indicated on drawings with concealed trim clamps, concealed hinge, plastic directory card holder, and flush lock keyed alike. Front shall have cylindrical tumbler type lock with catch and spring-loaded door pull. All lock assemblies shall be keyed alike. Finishes:
   1. Finish in manufacturer's standard gray enamel.

2.3 SOURCE QUALITY CONTROL

A. General Conditions: Testing, inspection and analysis requirements.

B. Independently test integral surge suppressers with category C3 high exposure waveform (20 kV-1.2/50us, 10kA-8/20 us) per IEEE C62.41.

PART 3 EXECUTION

3.1 INSTALLATION

A. Install panelboards in accordance with NEMA PB 1.1.

B. Install panelboards plumb.

C. Install recessed panelboards flush with wall finishes.

D. Height: 6 feet (1800 mm) to top of panelboard install panelboards taller than 6 feet (1800 mm) with bottom no more than 4 inches (100 mm) above floor.

E. Install filler plates for unused spaces in panelboards.

F. Provide typed circuit directory for each branch circuit panelboard [and load center]. Revise directory to reflect circuiting changes to balance phase loads. Identify each circuit as to its clear, evident and specific purpose of use.

G. Install engraved plastic nameplates in accordance with Section 26 05 53.

H. Install spare conduits out of each recessed panelboard to accessible location above ceiling and below slab not on grade. Minimum spare conduits: 5 empty 1 inch (DN27) (above and below). Identify each as SPARE.

I. Ground and bond panelboard enclosure according to Section 26 05 26. Connect equipment ground bars of panels in accordance with NFPA 70.

J. Provide each panelboard with nameplate showing panel designation, voltage rating and phase. Indicate source of power (feeder origin) and feeder size (awg/mils and conduit).

K. Label shall be engraved laminated-plastic nameplate. Nameplates shall be black with white letters (normal power) or red with white letters (emergency power).

L. Mount panelboards securely to building structure with 3/8" minimum diameter galvanized bolts and inserts number as required for size of panel, but not less than 4. Mount panelboards with centerline 4'-6" approximately above finished floor with the top a maximum of 74” AFF. Where panels of different heights are mounted adjacent, install top of panel trim at same height above floor. Close all unused openings.

M. Mount feeder panelboards taller than 66" on 4" high 2500# concrete pad and bolt to wall and pad with 1/2" diameter bolts and inserts .Breaker handles in the “ON” position shall not be higher than 6-7” to centerline from the Finished Floor when panelboards are installed on concrete pads

N. Where two sets of feeder cables are required in panel gutter space, run one set in each side of panel.

O. When connecting a panelboard to a transformer, connected conductors shall include a slack 90-degrees bend in flexible conduit between the transformer and any subsequent rigid connection to building structure. Use stranded, flexible conductors to maintain as much flexibility as practical. Do not permit flexible conductors to contact or drape against floor or wall surfaces. The first panelboard, cabinet or switch connected to a transformer shall be resiliently supported from structure by affixing with bolts through holes with grommets (wall supported; equal to Kinetics Model TG Isolation Grommet) or by being set on ¾” thick Neoprene isolation

pads (equal to Kinetics Type RSP) sized so that the supported load deflects pads approximately 0.12”, or in the upper half of the manufacturer’s recommended loading range in pounds per square inch. Pad type isolators should use load spreading steel plates to avoid damaging the pad by narrow base rails or sections, as required.

P. Provide seismic bracing in accordance with the manufacturer's recommendations and in compliance with the seismic zone requirements for the zone in which the equipment is located.

Q. Connect only one wire/cable to each breaker terminal.

3.2 FIELD QUALITY CONTROL

A. General Conditions: Requirements for testing, adjusting, and balancing.

B. Inspect and test in accordance with NETA ATS, except Section 4.

C. Perform circuit breaker inspections and tests listed in NETA ATS, Section 7.6.

D. Perform switch inspections and tests listed in NETA ATS, Section 7.5.

E. Perform controller inspections and tests listed in NETA ATS, Section 7.16.1.

3.3 ADJUSTING

A. General Conditions: Requirements for starting and adjusting.

B. Measure steady state load currents at each panelboard feeder; rearrange circuits in panelboard to balance phase loads to within 20 percent of each other. Maintain proper phasing for multi-wire branch circuits.

3.4 CLEANING

A. General Conditions: Requirements for cleaning.

B. Clean existing panelboards to remain or to be reinstalled.

END OF SECTION

SECTION 262716 - ELECTRICAL CABINETS AND ENCLOSURES

PART 1 GENERAL

1.1 SUMMARY

A. Section Includes:
   1. Hinged cover enclosures.
   2. Cabinets.
   3. Terminal blocks.
   4. Accessories.

1.2 RELATED REQUIREMENTS:

A. Section 260526 - Grounding and Bonding for Electrical Systems.

B. Section 260529 - Hangers and Supports for Electrical Systems.

C. Section 260533 - Raceway and Boxes for Electrical Systems.

1.3 REFERENCE STANDARDS

A. National Electrical Manufacturers Association:
   1. NEMA 250 - Enclosures for Electrical Equipment (1000 Volts Maximum).
   2. NEMA ICS 4 - Industrial Control and Systems: Terminal Blocks.

1.4 SUBMITTALS

A. Refer to Section 013300 - Submittal Requirements for submittal procedures.

B. General Conditions: Submittal procedures.

C. Product Data: Submit manufacturer's standard data for enclosures, cabinets, and terminal blocks.

D. Manufacturer's Instructions: Submit application conditions and limitations of use stipulated by product testing agency specified under Regulatory Requirements. Include instructions for storage, handling, protection, examination, preparation, and installation of product.

1.5 MAINTENANCE MATERIAL SUBMITTALS

A. General Conditions: Requirements for maintenance materials.

B. Extra Stock Materials:
   1. Furnish two of each key.

1.6 QUALIFICATIONS

A. Manufacturer: Company specializing in manufacturing Products specified in this section with minimum three years documented experience.

PART 2 PRODUCTS

2.1 HINGED COVER ENCLOSURES

A. Description: NEMA 250, Type 1 or 3R, steel.
   1. Covers: Continuous hinge, held closed by flush latch operable by screwdriver.

2. Furnish interior metal panel for mounting terminal blocks and electrical components; finish with white enamel.
3. Enclosure Finish: Manufacturer's standard enamel.

2.2 CABINETS

A. Description:
   1. Boxes: Galvanized steel with removable end walls.
   2. Box Size: Size per use or as shown.
   3. Backboard: Furnish 3/4 inch (19 mm) thick plywood backboard for mounting terminal blocks. Paint matte white.
   4. Fronts: Steel type with concealed trim clamps, door with concealed hinge, and flush lock keyed to match branch circuit panelboard.

B. Fabrication
   1. Furnish metal barriers to form separate compartments wiring of different systems and voltages.
   2. Furnish accessory feet for free-standing equipment.

C. Finishes:
   1. Finish with gray baked enamel.

2.3 TERMINAL BLOCKS

A. Description:
   1. Terminal Blocks: NEMA ICS 4.
   2. Power Terminals: Unit construction type with closed back and tubular pressure screw connectors, rated 600 volts.
   3. Signal and Control Terminals: Modular construction type, suitable for channel mounting, with tubular pressure screw connectors, rated 300 volts.
   4. Furnish ground bus terminal block, with each connector bonded to enclosure.

PART 3 EXECUTION

3.1 INSTALLATION

A. Install enclosures and boxes plumb. Anchor securely to wall and structural supports at each corner in accordance with Section 260529.

B. Install cabinet fronts plumb.

3.2 CLEANING

A. General Conditions: Final cleaning.

B. Clean existing cabinets and enclosures to remain or to be reinstalled.

C. Clean electrical parts to remove conductive and harmful materials.

D. Remove dirt and debris from enclosure.

E. Clean finishes and touch up damage.

END OF SECTION

SECTION 262726 - WIRING DEVICES

PART 1 GENERAL

1.1 SUMMARY

A. Section includes wall switches; wall dimmers; wall and ceiling occupancy sensors; receptacles; multioutlet assembly; and device plates and decorative box covers.

1.2 RELATED SECTIONS:

A. Section 260533 - Raceway and Boxes for Electrical Systems: Outlet boxes for wiring devices.

B. Section 260923 – Lighting Control Devices; Wall and ceiling occupancy sensors.

1.3 REFERENCES

A. National Electrical Manufacturers Association:
   1. NEMA WD 1 - General Requirements for Wiring Devices.
   2. NEMA WD 6 - Wiring Devices-Dimensional Requirements.

1.4 SUBMITTALS

A. Refer to Section 013300 - Submittal Requirements for submittal procedures.

B. General Conditions: Submittal procedures.

C. Product Data: Submit manufacturer's catalog information showing dimensions, colors, and configurations.

1.5 QUALIFICATIONS

A. Manufacturer: Company specializing in manufacturing products specified in this section with minimum three years [documented] experience.

1.6 EXTRA MATERIALS

A. General Conditions: Spare parts and maintenance products.

B. Furnish two of each style, size, or switch, receptacle type and finish wall plate.

PART 2 PRODUCTS

2.1 WALL SWITCHES

A. Manufacturers:
   1. Cooper Wiring Devices.
   2. Harvey Hubbell, Inc.
   3. Leviton Manufacturing Company.
   4. P&S.
   5. Substitutions: Not permitted.

B. Product Description: NEMA WD 1, Heavy-Duty,AC only general-use snap switch.

C. Body and Handle: White plastic with toggle handle.

D. Locator Light: Lighted handle type switch; amber light.

E. Ratings:
   1. Voltage:
   2. 120-277volts, AC.
   3. Current: 20 amperes.

2.2 WALL DIMMERS

A. Manufacturers:
   1. Hubbell Wiring Devices.
   2. Leviton.
   3. P&S.
   4. Substitutions: Not Permitted.

B. Product Description: NEMA WD 1; Semiconductor dimmer for the following load types.
   1. Dimmers shall provide full range, continuously variable control of light intensity.
   2. Controls shall provide preset single pole, 3-way, or multi-location control from the dimmer location regardless of the position of the other 3-way switch location.
   3. Ten-year operational life while operating continually at any temperature in an ambient temperature range of 0 degrees C (32 degrees F) to 40 degrees C (104 degrees F) and 90 percent non-condensing relative humidity.
   4. Operate at the rated capacity across the full ambient temperature range including modified capacities for ganging configurations with require the removal of fins.
   5. Control should be designed to not interfere with audio, video, or radio equipment.
   6. Utilize air gap off, activated when user selects “off” at any control to disconnect the load from line supply eliminating any leakage current.
   7. Possess power failure memory such that if power is interrupted and subsequently returned, lights will automatically return to same levels (dimmed setting, full on, or off) prior to power interruption.
   8. Designed and tested with withstand electrostatic discharges up to 15,000 V without impairment per IEC 801-2.
   9. Design and test dimmers to withstand line-side surges without impairment to performance when subjected to surges of 6,000 volts, 200 amps per ANSI/ IEEE C62.41C.
   10. Capable of operating at the rated capacity; this includes modified capacities for ganging configurations which require the removal of fins. Operation at rated capacity shall be possible across the full ambient temperature range, without shortening design lifetime.

C. Load Specific Requirements: Within rated capacity, dimmers shall be available for direct control of the following loads.
   1. Incandescent:
      a. Contain circuitry specifically designed to control incandescent and halogen loads.
      b. Shall have a maximum output of no less than 95% of line voltage.
   2. Dimming Compact Fluorescent Lamps (CFL):
      a. Contain circuitry specifically designed to control dimmable self ballasted CFL loads.
      b. Provide with lower dimming range adjustment.
      c. Listed to UL 172.
   3. Dimming LED Lamps:
      a. Contain circuitry specifically designed to control dimmable self ballasted CFL loads.

b. Provide with lower dimming range adjustment.
c. Listed to UL 172.

4. Electronic Low Voltage (ELV):
   a. Dimmers shall contain circuitry specifically designed to control the input of electronic solid state low voltage transformers.
   b. Shall have a maximum output of no less than 92% of line voltage.
   c. Dimmers using standard phase control shall not be acceptable.
5. Magnetic Low Voltage (MLV)
   a. Dimmers shall contain circuitry specifically designed to control and provide a symmetrical AC waveform to input of magnetic low voltage transformers per UL1472.
   b. Shall have a maximum output of no less than 95% of line voltage.
6. Fan Speed Control:
   a. Fully Variable fan speed controls for paddle fans, ventilation fans and exhaust fans.
   b. Quiet fan speed controls shall provide low-medium-high speeds settings and off.
   c. Shall be listed to UL 1917.
7. Remote Dimming Modules:
   a. Provide high power module and wall dimmer from a single manufacturer.
   b. High power module listed to UL 508 for control of incandescent/ halogen, magnetic low voltage, electronic low voltage, fluorescent, and neon/cold cathode loads. Provide high power modules as defined on project drawings.

D. Body and Handle: White Nylon or match existing with linear slide.

E. Voltage: 120 or 277 volts.

F. Power Rating: Match load shown on drawings; 600 watts minimum.

G. Accessory Wall Switch: Match dimmer appearance.

2.3 OCCUPANCY SENSORS AND POWER PACKS

A. See 26 09 23 Lighting Control Devices.

2.4 RECEPTACLES

A. Manufacturers:
   1. Cooper Wiring Devices.
   2. Harvey Hubbell, Inc.
   3. Leviton Manufacturing Company.
   4. P&S.
   5. Substitutions: Not permitted.

B. Product Description: NEMA WD 1, Heavy-duty general use receptacle.

C. Device Body: White, nylon. Provide red device for receptacles on standby emergency power.

D. Configuration: NEMA WD 6, type as indicated on Drawings.

E. Convenience Receptacle: Type 5-20.

F. GFCI Receptacle: Convenience receptacle with integral ground fault circuit interrupter to meet regulatory requirements.

G. Receptacles shall be Tamper-Resistant where required by section 406.12 of the National Electrical Code, 2017.

2.5 WALL PLATES

A. Manufacturers:
   1. Cooper Wiring Devices.
   2. Harvey Hubbell, Inc.
   3. Leviton Manufacturing Company.
   4. P&S.
   5. Substitutions: Not permitted.

B. Decorative Cover Plate: White. Provide red cover/plate for red receptacle unless noted otherwise.

C. Jumbo Cover Plate: White or to match existing.

D. Weatherproof Cover Plate: Gasketed cast metal plate with hinged and gasketed device cover. System shall be weatherproof while in use.

E. Wall plates for devices in laboratories, kitchen areas, mechanical rooms, and other similar areas shall be beveled edge stainless steel plates, single or multi-gang as required by the outlet. Wall plates for devices in surface boxes, unless specified otherwise, shall be beveled edge satin finish stainless steel plates, single or multi-gang as required by the outlet. Blank plates shall be furnished and installed on all empty, blanked or unused outlets. Device plates manufactured by device manufacturer where available. Wall Plates shall be single and combination types that mate and match with corresponding devices.

PART 3 EXECUTION

3.1 EXAMINATION

A. General Conditions: Coordination and project conditions.

B. Verify outlet boxes are installed at proper height.

C. Verify wall openings are neatly cut and completely covered by wall plates.

D. Verify branch circuit wiring installation is completed, tested, and ready for connection to wiring devices.

3.2 PREPARATION

A. Clean debris from outlet boxes.

3.3 INSTALLATION

A. Install devices plumb and level.

B. Install switches with OFF position down.

C. Install wall dimmers to achieve full rating specified and indicated after derating for ganging as instructed by manufacturer.

D. Do not share neutral conductor on load side of dimmers.

E. Install receptacles with grounding pole on bottom.

F. Connect wiring device grounding terminal to outlet box with bonding jumper and branch circuit equipment grounding conductor.

G. Install wall plates on flush mounted switches, receptacles, and blank outlets.

H. Install decorative plates on switch, receptacle, and blank outlets in finished areas.

I. Connect wiring devices by wrapping solid conductor around screw terminal. When stranded conductors are used in lieu of solid, use crimp on fork terminals for device terminations. Do not place bare stranded conductors directly under device screws.

J. Use jumbo size plates for outlets installed in masonry walls.

K. Install galvanized steel plates on outlet boxes and junction boxes in unfinished areas, above accessible ceilings, and on surface mounted outlets.

L. Match devices to plug connectors for Owner-furnished equipment. Verify type, configuration, etc., prior to providing devices. Including all such costs in bid submission.

3.4 INTERFACE WITH OTHER PRODUCTS

A. Coordinate locations of outlet boxes provided under Section 26 05 33 to obtain mounting heights as indicated on drawings.

B. Install wall switch 48 inches above finished floor.

C. Install convenience receptacle 18 inches above finished floor.

D. Install convenience receptacle 6 inches above back splash of counter].

E. Install dimmer 48 inches above finished floor.

3.5 FIELD QUALITY CONTROL

A. General Conditions: Field inspecting, testing, adjusting, and balancing.

B. Inspect each wiring device for defects.

C. Operate each wall switch with circuit energized and verify proper operation.

D. Verify each receptacle device is energized.

E. Test each receptacle device for proper polarity.

F. Test each GFCI receptacle device for proper operation.

3.6 ADJUSTING

A. General Conditions: Testing, adjusting, and balancing.

B. Adjust devices and wall plates to be flush and level.

3.7 CLEANING

A. General Conditions: Final cleaning.

B. Clean exposed surfaces to remove splatters and restore finish.

END OF SECTION

SECTION 262813 - FUSES

PART 1 GENERAL

1.1 SUMMARY

A. Section includes fuses and spare fuse cabinet.

1.2 REFERENCES

A. National Electrical Manufacturers Association:
   1. NEMA FU 1 - Low Voltage Cartridge Fuses.

1.3 DESIGN REQUIREMENTS

A. Select fuses to provide appropriate levels of short circuit and overcurrent protection for the following components: wire, cable, bus structures, and other equipment. Design system to maintain component damage within acceptable levels during faults.

B. Select fuses to coordinate with time current characteristics of other overcurrent protective elements, including other fuses, circuit breakers, and protective relays. Design system to maintain operation of device closest to fault operates.

1.4 FUSE PERFORMANCE REQUIREMENTS

A. Main Service Switches Larger than 600 amperes: Class L (time delay).

B. Main Service Switches: Class RK1 (time delay).

C. Power Load Feeder Switches Larger than 600 amperes: Class L (time delay).

D. Power Load Feeder Switches: Class RK1 (time delay).

E. Motor Load Feeder Switches: Class RK1 (time delay).

F. Lighting Load Feeder Switches Larger than 600 amperes: Class L time delay.

G. Lighting Load Feeder Switches: Class RK1 (time delay).

H. Other Feeder Switches Larger than 600 amperes: Class L time delay.

I. Other Feeder Switches: Class RK1 (time delay).

J. General Purpose Branch Circuits: Class RK1 (time delay).

K. Motor Branch Circuits: Class RK1 (time delay).

L. Lighting Branch Circuits: Class G.

1.5 SUBMITTALS

A. Refer to Section 013300 - Submittal Requirements for submittal procedures.

B. General Conditions: Submittal procedures.

C. Product Data: Submit data sheets showing electrical characteristics, including time-current curves.

1.6 CLOSEOUT SUBMITTALS

A. General Conditions: Closeout procedures.

B. Project Record Documents: Record actual sizes, ratings, and locations of fuses.

1.7 QUALIFICATIONS

A. Manufacturer: Company specializing in manufacturing products specified in this section with minimum three years documented experience.

1.8 MAINTENANCE MATERIALS

A. General Conditions: Spare parts and maintenance products.

1.9 EXTRA MATERIALS

A. General Conditions: Requirements for extra materials.

B. Furnish 20% spare fuses of each Class, size, and rating installed.

PART 2 PRODUCTS

2.1 FUSES

A. Manufacturers:
   1. Bussman
   2. Gould Shawmut
   3. Substitutions: General Conditions

B. Dimensions and Performance: NEMA FU 1, Class as specified or as indicated on Drawings.

C. Voltage: Rating suitable for circuit phase-to-phase voltage.

2.2 CLASS RK1 (TIME DELAY) FUSES

A. Manufacturers:
   1. Bussman.
   2. Gould Shawmut.
   3. Substitutions: General Conditions.

B. Dimensions and Performance: NEMA FU 1.

C. Voltage: Rating suitable for circuit phase-to-phase voltage.

2.3 CLASS RK1 (NON-TIME-DELAY) FUSES

A. Manufacturers:
   1. Bussman.
   2. Gould Shawmut.
   3. Substitutions: General Conditions.

B. Dimensions and Performance: NEMA FU 1.

C. Voltage: Rating suitable for circuit phase-to-phase voltage.

2.4 CLASS RK5 FUSES

A. Manufacturers:
   1. Bussman.
   2. Gould Shawmut.
   3. Substitutions: General Conditions.

B. Dimensions and Performance: NEMA FU 1.

C. Voltage: Rating suitable for circuit phase-to-phase voltage.

2.5 CLASS J (TIME DELAY) FUSES

A. Manufacturers:
   1. Bussman
   2. Gould Shawmut.
   3. Substitutions: General Conditions.

B. Dimensions and Performance: NEMA FU 1.

C. Voltage: Rating suitable for circuit phase-to-phase voltage.

2.6 CLASS J (NON-TIME-DELAY) FUSES

A. Manufacturers:
   1. Bussman
   2. Gould Shawmut.
   3. Substitutions: General Conditions

B. Dimensions and Performance: NEMA FU 1.

C. Voltage: Rating suitable for circuit phase-to-phase voltage.

2.7 CLASS L (FAST-ACTING) FUSES

A. Manufacturers:
   1. Bussman
   2. Gould Shawmut.
   3. Substitutions: General Conditions.

B. Dimensions and Performance: NEMA FU 1.

C. Voltage: Rating suitable for circuit phase-to-phase voltage.

2.8 CLASS L (TIME DELAY) FUSES

A. Manufacturers:
   1. Bussman
   2. Gould Shawmut.
   3. Substitutions: General Conditions

B. Dimensions and Performance: NEMA FU 1.

C. Voltage: Rating suitable for circuit phase-to-phase voltage.

2.9 SPARE FUSE CABINET

A. Product Description: Wall-mounted sheet metal cabinet with shelves, suitably sized to store spare fuses and fuse pullers specified.

B. Doors:Hinged, with hasp for Owner's padlock.

C. Finish: Gray enamel.

PART 3 EXECUTION

3.1 INSTALLATION

A. Install fuse with label oriented so manufacturer, type, and size are easily read.

B. Install spare fuse cabinet at location as directed by Owner.

END OF SECTION

SECTION 262819 - ENCLOSED SWITCHES

PART 1 GENERAL

1.1 SUMMARY

A. Section Includes:
   1. Fusible.
   2. Nonfusible switches.

1.2 RELATED REQUIREMENTS:

A. Section 260529 - Hangers and Supports for Electrical Systems.

B. Section 260553 - Electrical Identification.

C. Section 262813 - Fuses.

1.3 REFERENCE STANDARDS

A. National Electrical Manufacturers Association:
   1. NEMA FU 1 - Low Voltage Cartridge Fuses.
   2. NEMA KS 1 - Enclosed and Miscellaneous Distribution Equipment Switches (600 Volts Maximum).

B. International Electrical Testing Association:
   1. NETA ATS - Acceptance Testing Specifications for Electrical Power Distribution Equipment and Systems.

1.4 SUBMITTALS

A. Refer to Section 013300 - Submittal Requirements for submittal procedures.

B. General Conditions: Submittal procedures.

C. Product Data: Submit switch ratings and enclosure dimensions.

1.5 CLOSEOUT SUBMITTALS

A. General Conditions: Closeout procedures.

B. Project Record Documents: Record actual locations of enclosed switches and ratings of installed fuses.

1.6 QUALIFICATIONS

A. Manufacturer: Company specializing in manufacturing products specified in this section with minimum three years documented experience.

PART 2 PRODUCTS

2.1 FUSIBLE SWITCH ASSEMBLIES

A. Description: NEMA KS 1, Type HD, enclosed load interrupter knife switch. Handle lockable in OFF position.

B. Operation:
   1. Switch Ratings
      a. Switch Rating: Horsepower rated for AC or DC as indicated on Drawings.
      b. Short Circuit Current Rating: UL listed for 10,000 rms symmetrical amperes when used with or protected by Class H or K fuses (30-600 ampere). 200,000 rms symmetrical amperes when used with or protected by Class L fuses (800-1200 ampere).

C. Materials:
   1. Fuse clips: Designed to accommodate NEMA FU 1, Class R fuses.
   2. Enclosure: NEMA KS 1, to meet conditions. Fabricate enclosure from steel finished with manufacturer's standard gray enamel.
      a. Interior Dry Locations: Type 1.
      b. Exterior Locations: Type 3R.
   3. Service Entrance: Switches identified for use as service equipment are to be labeled for this application. Furnish solid neutral assembly and equipment ground bar.
   4. Furnish switches with entirely copper current carrying parts.

2.2 NONFUSIBLE SWITCH ASSEMBLIES

A. Description: NEMA KS 1, Type HD enclosed load interrupter knife switch. Handle lockable in OFF position.

B. Operation:
   1. Switch Ratings
      a. Switch Rating: Horsepower rated for AC or DC as indicated on Drawings.
      b. Short Circuit Current Rating: UL listed for 10,000 rms symmetrical amperes when used with or protected by Class H or K fuses (30-600 ampere). 200,000 rms symmetrical amperes when used with or protected by Class L fuses (800-1200 ampere).

C. Materials:
   1. Enclosure: NEMA KS 1, to meet conditions. Fabricate enclosure from [steel finished with manufacturer's standard gray enamel.
      a. Interior Dry Locations: Type 1.
      b. Exterior Locations: Type 3R.
   2. Service Entrance: Switches identified for use as service equipment are to be labeled for this application. Furnish solid neutral assembly and equipment ground bar.
   3. Furnish switches with entirely copper current carrying parts.

PART 3 EXECUTION

3.1 INSTALLATION

A. Install enclosed switches where indicated. Secure switches to building or equipment surface as shown. Where the surface is not adaptable for mounting, provide unistrut P-1000 rack mounted as required to secure switch.

B. Install enclosed switches plumb. Provide supports in accordance with Section 26 05 29.

C. Height: 5 feet (1500 mm) to operating handle.

D. Install fuses for fusible disconnect switches. Refer to Section 26 28 13 for product requirements.

E. Install engraved plastic nameplates in accordance with Section 260553. Engrave nameplates with the equipment served and the panel and circuit number supplying the switch.

F. Apply adhesive tag on inside door of each fused switch indicating NEMA fuse class and size installed.

G. Secure switches and circuit breakers to building structure in accordance with seismic zone specified in other sections of this specification.

H. All exterior mounted switches shall comply with NEC 312.2.

I. All switches shall be mounted to comply with NEC 404.8.

3.2 FIELD QUALITY CONTROL

A. General Conditions: Requirements for testing, adjusting, and balancing.

B. Inspect and test in accordance with NETA ATS, except Section 4.

C. Perform inspections and tests listed in NETA ATS, Section 7.5.

3.3 CLEANING

A. General Conditions: Requirements for cleaning.

B. Clean existing enclosed switches to remain or to be reinstalled.

END OF SECTION

SECTION 262916 - ENCLOSED CONTACTORS

PART 1 GENERAL

1.1 SUMMARY

A. Section includes enclosed contactors for lighting and general purposes.

1.2 RELATED SECTIONS:

A. Section 262716 – Electrical Cabinets and Enclosures.

1.3 REFERENCES

A. National Electrical Manufacturers Association:
   1. NEMA FU 1 - Low Voltage Cartridge Fuses.
   2. NEMA ICS 2 - Industrial Control and Systems: Controllers, Contactors, and Overload Relays, Rated Not More Than 2000 Volts AC or 750 Volts DC.
   3. NEMA ICS 5 - Industrial Control and Systems: Control Circuit and Pilot Devices.
   4. NEMA ICS 6 - Industrial Control and Systems: Enclosures.
   5. NEMA KS 1 - Enclosed and Miscellaneous Distribution Equipment Switches (600 Volts Maximum).

B. International Electrical Testing Association:
   1. NETA ATS - Acceptance Testing Specifications for Electrical Power Distribution Equipment and Systems.

C. Underwriters Laboratories Inc.:
   1. UL 489 - Molded-Case Circuit Breakers, Molded-Case Switches, and Circuit-Breaker Enclosures.

1.4 SUBMITTALS

A. General Conditions: Submittal procedures.

B. Product Data: Submit dimensions, size, voltage ratings and current ratings.

1.5 CLOSEOUT SUBMITTALS

A. Refer to Section 013300 - Submittal Requirements for submittal procedures.

B. General Conditions: Closeout procedures.

C. Project Record Documents: Record actual locations and ratings of enclosed contactors.

D. Operation and Maintenance Data: Submit instructions for replacing and maintaining coil and contacts.

1.6 QUALIFICATIONS

A. Manufacturer: Company specializing in manufacturing products specified in this section with minimum three years documented experience.

PART 2 PRODUCTS

2.1 GENERAL PURPOSE CONTACTORS

A. Product Description: NEMA ICS 2, AC general purpose magnetic contactor.

B. Coil operating voltage: 120 or 277 volts, 60 Hertz.

C. Poles: To match circuit configuration and control function.

D. Product Features:
   1. Cover Mounted Pilot Devices: NEMA ICS 5, standard-duty type with Form Z contacts.
   2. Pushbutton: ON/OFF function, with shrouded configuration.
   3. Selector Switch: ON/OFF/AUTOMATIC function, with rotary action.
   4. Indicating Light: RED/GREEN lens, with led lamp.
   5. Auxiliary Contacts: One field convertible in addition to seal-in contact.
   6. Relays: NEMA ICS 2.
   7. Control Power Transformers: Voltage and configuration as needed.

E. Combination Contactors: Combine contactors with thermal magnetic circuit breaker conforming to UL 489, with integral thermal and instantaneous magnetic trip in each pole.

F. Enclosure: NEMA ICS 6, to meet conditions. Fabricate enclosure from steel finished with manufacturer's standard gray enamel.
   1. Interior Dry Locations: Type 1.
   2. Exterior Locations: Type 3R.

2.2 LIGHTING CONTACTORS

A. Product Description: NEMA ICS 2, magnetic lighting contactor.

B. Configuration: Mechanically held, 2 wire control.

C. Coil operating voltage: 120 or 277 volts, 60 Hertz.

D. Poles: To match circuit configuration and control function.

E. Contact Rating: Match branch circuit overcurrent protection, considering derating for continuous loads.

F. Accessories:
   1. Cover Mounted Pilot Devices: NEMA ICS 5, standard-duty type with Form Z contacts.
   2. Selector Switch: ON/OFF/AUTOMATIC function, with rotary action.
   3. Auxiliary Contacts: One field convertible in addition to seal-in contact.
   4. Relays: NEMA ICS 2.
   5. Control Power Transformers: Voltage and configuration as needed.

G. Combination Contactors: Combine contactors with thermal magnetic circuit breaker conforming to UL 489, with integral thermal and instantaneous magnetic trip in each pole.

H. Enclosure: NEMA ICS 6, to meet conditions. Fabricate enclosure from [steel finished with manufacturer's standard gray enamel.
   1. Interior Dry Locations: Type 1.
   2. Exterior Locations: Type 3R.

PART 3 EXECUTION

3.1 INSTALLATION

A. Install enclosed contactors as indicated on Drawings, in accordance with NECA "Standard of Installation."

B. Install enclosed contactors plumb. Provide supports in accordance with Section 26 05 29.

C. Height: 5 ft (1500 mm) to operating handle.

D. Install fuses for fusible switches. Refer to Section 26 28 13 for product requirements.

E. Install engraved plastic nameplates. Refer to Section 26 05 53 for product requirements and location.

3.2 FIELD QUALITY CONTROL

A. General Conditions: Field inspecting, testing, adjusting, and balancing.

B. Inspect and test in accordance with NETA ATS, except Section 4.

C. Perform inspections and tests listed in NETA ATS, Section 7.16.1.

END OF SECTION

SECTION 263437 - CENTRAL LIGHTING INVERTER SYSTEM

PART 1 GENERAL

1.1 SPECIFICATION

A. This specification defines the electrical and mechanical characteristics and requirements for a line interactive, single-phase, solid-state uninterruptible power supply, hereafter referred to as the CIS (Central Inverter System). The CIS shall provide high quality, computer grade AC power for electronic lighting loads (power factor corrected and self-ballast fluorescent, LED, incandescent, quartz re-strike or halogen and HID) during emergency backup.

B. The CIS shall incorporate a high frequency pulse width modulated (PWM) inverter utilizing IGBT technology, a micro-controller controlled inverter and a integral battery charger, communication port, and a user friendly control panel with audible and visual alarms.

1.2 DESIGN STANDARDS

A. The CIS shall be designed in accordance with the applicable sections of the current revision of the following documents. Where a conflict arises between these documents and statements made herein, the statements in this specification shall supersede.
   1. UL 924 Standard Emergency Lighting and Power Equipment
   2. National Electrical Code
   3. NFPA-101 (Life Safety Code)
   4. OSHA

1.3 SYSTEM DESCRIPTION

A. Design Requirements - Electronics Module
   1. Nominal Input/Output Voltage
      a. The Input and Output voltage of the CIS shall be pre-configured to match the user specified input and load requirements. Available voltages are 120, 208, 240, 277 or 480VAC.
      b. See schedule on plans.

B. Output Load Capacity
   1. The output load capacity of the CIS shall be rated in kVA at unity power factor. The CIS shall be able to supply the rated kW from .5 lagging to .5 leading.
   2. See schedule on plans.

C. Design Requirement - Battery System
   1. Battery Cells
      a. The CIS shall be provided with sealed, valve regulated, front access, lead acid batteries.
   2. Reserve Time
      a. The battery system shall be sized to provide the necessary reserve time to feed the inverter in case of a mains failure. Battery Reserve time: 90 minutes at the full load rating of the system
   3. Recharge Time
      a. The battery charger shall recharge the fully discharged batteries within a 24 hour period. The charger shall be an integrated, microcontroller controlled, and two stage charger.

D. Modes of Operation

1. The CIS shall be designed to operate with less than a 2-millisecond transfer time:
2. Normal:
   a. The commercial AC power continuously supplies the critical load while simultaneously providing power to charge to float charge the batteries. The charging function is performed with the same power section that is used to support the load during a power outage.
3. Emergency:
   a. Upon failure of the commercial AC power the inverter instantaneously with a maximum of a 2-millisecond break, switches its power supply from the input converter to the battery system. There shall be no loss of power to the critical load upon the failure or restoration of the utility source.
4. Recharge:
   a. Upon restoration of commercial AC power after a power outage, the input converter shall automatically restart and start charging the batteries. The critical loads are powered by the commercial AC power again.

E. Performance Requirements
   1. AC INPUT TO CIS
      a. Voltage Configuration for Standard Units: 1-phase, 2-wire-plus-ground.
      b. Voltage Range: (+10%, -20%)
      c. Frequency: 60 Hz (+/- 3%)
      d. Power Factor: . 5 lagging / leading
      e. System Short Circuit Rating: UL Listed for 65kAIC, RMS symmetrical
      f. AC Overcurrent: 125% of nominal input current
      g. Voltage Distortion: Less than 10% THD maximum from 50% to full load (For Resistive Load)
      h. Surge Protection: Sustains input surges without damage per standards set in UL924
   2. AC Output, CIS Inverter
      a. Voltage Configuration for Standard Units: 1-phase, 2-wire-plus-ground
      b. Static Voltage Stability: Load current changes +/- 4%, battery discharge +/- 12.5%
      c. Dynamic Voltage Stability: +/- 3% (25% step load), +/- 6% (50% step load)
      d. Dynamic Recovery Time to within 2% of nominal: 10 cycles (0-100% load step)
      e. Output Harmonic Voltage Distortion: < 3% (with linear load)
      f. Frequency: 60 Hz (+/- .05Hz during emergency mode)
      g. Load Power Factor Range: 0.5 lagging to 0.5 leading
      h. Output Power Rating: kVA = kW
      i. Overload Capability: to 100% continuous rating:
         to 115% for 10 minutes
         to 150% for 16 line cycles
      j. Crest Factor: <= 2.8

1.4 ENVIRONMENTAL CONDITIONS

A. The CIS shall be capable to operate within the specified design and performance criteria provided that the following environmental conditions are met:
   1. Storage/Transport Temperature:
      a. -4 to 158 deg. F (-20 to 70 deg. C) without batteries
      b. 0 to 104 deg. F (-18 to 40 deg. C) with batteries*
      c. B. Operating Temperatures: (Conditioned Space)

d. 68° to 86° F (20° to 30° C) Per UL924 Rating
e. Relative Humidity: 0 to 95% non-condensing
f. Altitude: Operating: to 10,000 ft. (3,048 m) above sea level
g. De-rated 4% per 1,000 ft (304.8 m) above 10,000 ft. (3,048 m)
h. Storage/Transport: to 40,000 ft. (12,192 m) above sea level
i. Audible Noise: 50 dBA @ 1 meter from surface of the CIS during emergency mode

1.5 SUBMITTALS

A. Proposal Submittals

B. Submittals with the proposal shall include the following:
1. System configuration with single-line diagrams
2. Functional relationship of equipment including weights dimensions and heat dissipation.
3. Descriptions of equipment to be furnished, including deviations from these specifications.
4. Size and weight of units to be handled by installing contractor.

C. Central Inverter Systems Delivery Submittals
1. Submittals upon CIS delivery shall include:
a. A complete set of submittal drawings
b. One set of instruction manuals. Manuals shall include a functional description of the equipment, installation, safety precautions, instructions, step-by-step operating procedures and routine maintenance guidelines, including illustrations.

1.6 WARRANTY

A. Central Inverter System Module
1. The CIS manufacturer shall warrant the equipment against defects in materials and workmanship for 12 months after initial start-up or 18 months after ship date, whichever occurs first.

B. Battery
1. The battery manufacturer's standard warranty shall be passed through to the end user.
2. Sealed Lead Calcium VRLA, 10-year life expectancy – one-year full replacement warranty plus an additional nine years pro-rata.

1.7 QUALITY ASSURANCE

A. Manufacturer Qualifications
1. A minimum of 20 years experience in the design, manufacture, and testing of emergency power systems is required.

B. Factory Testing
1. Before shipment, the manufacturer shall fully and completely test the system to assure compliance with the specification.

PART 2 PRODUCTS

2.1 FABRICATION

A. All materials of the CIS shall be new, of current manufacture, high grade, free from all defects and shall not have been in prior service except as required during factory testing.

B. The CIS module and batteries shall be housed in a single freestanding NEMA type 1 enclosure. Front access only shall be required for installation, adjustments and expedient servicing. All components shall have a modular design and quick disconnect means to facilitate field service.

C. The CIS shall be powder painted with the manufacturer's standard color. The CIS shall be constructed of replaceable subassemblies. Like assemblies and like components shall be interchangeable.

D. Cooling of the CIS shall be forced-air in emergency mode with internally mounted fans to minimize audible noise. Fans shall not operate in the standby mode. Fan power shall be provided by the CIS. No air filters shall be required.

2.2 COMPONENTS

The CIS shall be comprised of the following components:

A. CIS Module
   1. The CIS module shall contain an inverter, an AC distribution module with an input circuit breaker, back-feed relay, a boost tap transformer, control, and monitoring subsystems.

B. Battery Module
   1. The battery module shall contain the battery plant required to produce the reserve energy to supply the inverter during abnormal AC mains conditions. The 90 - minute battery module shall be contained in same cabinet as electronics regardless of the system VA.

C. Battery Charger
   1. General
      a. In normal operating mode, the AC input voltage is rectified and boosted to the proper DC level by controlling the power bridge with a microcontroller to recharge the batteries. The battery charger circuit supplies first a constant current during bulk charge and a constant voltage during float charge to the batteries. Once the batteries have received a full recharge, a constant trickle charge maintains batteries at maximum level. Recharge time is 24 hours maximum at nominal AC input voltage. The AC ripple current of the DC output meets the battery manufacturer specification, thus ensuring the maximum battery lifetime.
   2. AC Input Current
      a. The charger unit is provided with an ac input current limiting circuit whereby the maximum input current shall not exceed 150% of the output full current rating.
   3. Automatic Restart
      a. Upon restoration of utility AC power, after a utility AC power outage and after a full CIS automatic end-of-discharge shutdown, the CIS will automatically restart, performing the normal CIS start up.
         1) D. DC Filter
         2) The charger shall have an output filter to minimize AC ripple voltage into the battery.
         3) Under no conditions shall ripple voltage into the battery exceed 2% RMS.
   4. Battery Recharge
      a. The charger is capable of producing battery-charging current sufficient to recharge the fully discharged battery bank within a 24-hour period. After the battery is recharged, the charger shall maintain full battery charge until the next emergency operation.
   5. Over-voltage Protection

a. The charger is equipped with a DC over-voltage protection circuit so that if the DC voltage rises above the pre-set limit, the charger shuts down automatically and initiates an alarm condition.

D. Inverter:
1. General:
a. The inverter converts DC voltage supplied by the battery to AC voltage of a precisely stabilized amplitude and frequency that is suitable for powering most sophisticated electrical equipment.
b. The inverter output voltage is generated by sinusoidal pulse width modulation (PWM). The use of a high carrier frequency for PWM and a dedicated ac filter circuit consisting of a transformer and capacitors, ensure a very low distortion of the output voltage (THD<3% on linear loads).
2. Overload Capability:
a. The inverter during emergency modes shall be capable of supplying current and voltage for overloads exceeding 100% and up to 150% of full load current for 16 line cycles, 115% for 10 minutes.
3. Output Power Transformer:
a. A dry type power transformer provides the inverter AC output. The transformer is built with copper wiring exclusively. The hottest winding temperature of the transformer shall not exceed the temperature limit of the transformer insulation class of material at ambient temperature.

E. Display and Controls:
1. Monitoring and Control:
a. The CIS system provides operation monitoring and control, audible alarms, and diagnostics. The front-mounted control panel includes a 4-line by 20-character OLED display and a keypad for user interface. The display will be menu driven. The system will have a continuous scrolling display of the following: Date & time, System Status (AC Status, Battery Status, Charger Status) and any system faults: This allows the operator to easily “watch” system functions as they occur and check on virtually any aspect of the system’s operation. Monitoring and control are microprocessor-based for accuracy and reliability. To ensure only authorized personnel can operate the unit, the system is multi-level password protected for all control functions and parameter changes.
2. Metering:
a. Scrolling through the meter functions can monitor the following measurements:
b. Utility input voltage
c. System output voltage
d. Battery voltage
e. Battery current
f. System output current
g. System output VA
h. Inverter wattage
i. System temperature
j. Date & time
k. System Days
3. Audible Alarm:

a. Audible alarm will activate with any of the following conditions and automatically store the 75 most recent events.
b. High battery charger voltage
c. Charger Fault
d. High AC input voltage
e. Low AC input voltage
f. Near low battery voltage
g. Low battery voltage
h. Load reduction fault
i. High Ambient temperature
j. Inverter fault
k. Output fault
l. Output overload
m. Output overload shutdown
n. System Test Failure

F. COMMUNICATION INTERFACES
1. BACNET IP INTERFACE
a. The system shall be equipped with an RJ-45 Ethernet port for remote communications to a Building Management System (BMS) via BACnet IP protocol. The BACnet IP interface shall support standard IP network settings (DHCP or static IP address, subnet mask, default gateway, programmable port number) and shall have a programmable systemwide Device Instance number. The BACnet IP interface shall provide read-only access to the following inverter telemetry:
1) Input Voltage(s)
2) Output Voltage(s)
3) Output Current(s)
4) Total Output Power
5) Ambient Temperature
6) Battery Voltage
7) Battery Current
8) Total Time On Battery
9) Days of Operation
10) The results of the inverter's last auto-run monthly self-test
11) The results of the inverter's last auto-run yearly self-test
12) Alarm states (no utility, on battery, battery low, input voltage high or low, inverter failure detected, inverter overloaded and overload shutdown, 'load reduction' activated, ambient temperature high, and battery charger fault).

G. MANUAL AND PROGRAMMABLE TESTING
1. The system shall incorporate a manual test function and two automatic test modes. The system will perform a programmable, self-diagnostic monthly test for 5 minutes, which is preset, for the 15th of every month and the user can program the event day and time. The yearly self-diagnostic test is for 90 minutes and the user can program the day and time the event is to take place. The microprocessor automatically records the last 75 test events in its own separate test result log.

H. BATTERY ASSEMBLY

1. The batteries are a front access sealed, lead-acid valve regulated battery cells with a one year full, nine year prorated warranty. Batteries shall be interconnected via buss bars and cables will be provided for shelf interconnects where required. A disconnect means shall be included for isolation of battery assembly from the CIS module.

I. SYSTEM OPTIONS

1. The central inverter system shall include the following options:
   a. ____ Remote Summary Alarm
   b. ____ BACnet MS/TP
   c. ____ Battery Cabinet Fan
   d. __X_ BACnet TCP/IP
   e. ____ Battery Temperature Monitor
   f. __X_ Status Monitoring Contacts
   g. ____ Drip Top
   h. ____ Fast Charge
   i. ____ Inverter On Dry Contact
   j. ____ Cloud Communication
   k. __X_ Load Control Relay
   l. ____ Modbus TCP/IP
   m. ____ Modbus RTU
   n. ____ Output Transfer Delay
   o. ____ Remote Status Panel (requires Status Monitoring Contacts)
   p. ____ Remote Meter Panel
   q. ____ Summary Fault Contact
   r. ____ Serial to Ethernet Adapter
   s. ____ Output Trip Alarm (Supervised Contact)
   t. ____ Time Delay (15 Minutes)
   u. __X_ Seismic Mounting
   v. ____ Zone Monitoring
   w. __X_ Internal Maintenance Bypass Switch

PART 3 EXECUTION

3.1 WIRING

A. All wiring shall be installed in conduit. Input and output wiring shall enter the cabinet in separate conduits.

3.2 UNIT START-UP AND SITE TESTING

A. Site start-up and testing shall be provided by the manufacturer's field service representative during normal working hours. Individual scheduling requirements can usually be met with 7 working days advance notice. Site testing shall consist of a complete test of the CIS and accessories by the CIS manufacturer in accordance with manufacturer's standards. Manufacturer's approved service representative must perform commissioning for two-year warranty to apply.

3.3 REPLACEMENT PARTS

A. Parts shall be available through Field Service Centers throughout the country. Recommended spare parts shall be fully stocked by local field service personnel with back up available from manufacturing location.

3.4 MAINTENANCE CONTRACTS

A. A complete offering of preventive and full-service maintenance contracts for both the CIS

B. system and batteries shall be available. An extended warranty and preventive maintenance

C. packages shall be available. Factory-trained service personnel shall perform warranty and preventive maintenance service. A five-year maintenance contract will include a unit start-up and site testing.

END OF SECTION

SECTION 263556 - SURGE PROTECTION DEVICES

PART 1 – GENERAL

1.1 RELATED DOCUMENTS

A. Drawings and general provisions of the Contract, including General and Supplementary Conditions and Division 1 Specification Sections, apply to this Section.

1.2 SUMMARY

A. This Section includes SPD for low-voltage power, control, and communication equipment.

1.3 SUBMITTALS

A. Refer to Section 013300 - Submittal Requirements for submittal procedures.

B. Product Data: For each type of product indicated. Include rated capacities, operating weights, operating characteristics, furnished specialties, and accessories.

C. Provide UL 1449, 3rd Edition test reports showing Suppressed Voltage Ratings (SVR) and all "Engineering Considerations". The SPD shall also be complementary listed to UL 1283

D. Qualification Data: Provide the following:
   1. Provide test reports from a recognized independent testing laboratory verifying the COMPLETE SPD will survive the published and specified maximum surge current rating. Test reports will clearly show that all components that make up a COMPLETE system were included in these tests (including but not limited to all necessary fuses, thermal disconnects, integral disconnects and monitoring systems).
   2. Provide data confirming that the SPD will survive the published and specified repetitive surge current rating (longevity characteristic).
   3. Per the requirements of NEC Article 285.6, provide test data demonstrating that the SPD is capable of surviving the published and specified short circuit current capability (AIC rating) without the use of external fusing.
   4. Provide a COMPLETE set of test and ratings data per the recommendations of NEMA LS1.

E. Operation and Maintenance Data: For transient voltage suppression devices to include in emergency, operation, and maintenance manuals.

F. Warranties: Special warranties specified in the Section.

1.4 QUALITY ASSURANCE

A. Testing Agency Qualifications: Testing agency as defined by OSHA in 29 CFR 1910.7, and that is acceptable to authorities having jurisdiction.
   1. Testing Agency's Field Supervisor: Person currently certified by the International Electrical Testing Association or the National Institute for Certification in Engineering Technologies to supervise on-site testing specified in Part 3.

B. Source Limitations: Obtain suppression devices and accessories through one source from a single manufacturer.

C. Electrical Components, Devices, and Accessories: Listed and labeled as defined in NFPA 70, Article 100, by a testing agency acceptable to authorities having jurisdiction, and marked for intended use.

D. Comply with IEEE C62.41, "IEEE Guide for Surge Voltages in Low Voltage AC Power Circuits," and test devices according to IEEE C62.45, "IEEE Guide on Surge Testing for Equipment Connected to Lo-Voltage AC Power Circuits."

E. Comply with NEMA LS1, "Low Voltage Surge Protection Devices."

F. Comply with UL 1283, "Electromagnetic Interference Filters," and UL 1449, "Transient Voltage Surge Suppressors."

G. MIL-STD-220A Compliance: Comply with military standard for measuring filter attenuation using the 50-ohm insertion loss method.

1.5 PROJECT CONDITIONS

A. Placing into Service: Do not energize or connect service entrance equipment or panelboard to their sources until the surge protective devices are installed and connected.

B. Service Conditions: Rate surge protection devices for continuous operation under the following conditions, unless otherwise indicated:
   1. Maximum Continuous Operating Voltage: Not less than 115% of nominal system operating voltage.
   2. Operating Temperature: 30 to 120 deg F (0 to 50 deg C)
   3. Humidity: 0 to 85 percent, noncondensing.
   4. Altitude: Less than 20,000 feet (6090 m) above sea level.

1.6 COORDINATION

A. Coordinate location of field-mounted surge suppressor to allow adequate clearances for maintenance.

1.7 WARRANTY

A. Most manufacturers offer five-year extended warranties on their equipment. Some manufacturers of cord-connected, plug-in surge suppressors offer extended warranties that either repair or replace damaged equipment that is protected by the suppressor. When warranties are required, verify with Owner's counsel that special warranties stated in this Article are not less than remedies available to Owner under prevailing local laws. Coordinate with Division 1 Section "Warranties".

B. General Warranty: Manufacturer's standard form in which manufacturer agrees to repair or replace components of surge suppressors that fail in materials or workmanship within five years from date of Substantial Completion.

C. Special Warranty for Cord-Connected, Plug-in Surge Suppressors: Manufacturer's standard form in which manufacturer aggress to repair or replace electronic equipment connected to circuits protected by surge suppressors.

PART 2 – PRODUCTS

2.1 MANUFACTURERS

A. Manufacturers: Subject to compliance with requirements, provide products by one of the following:
   1. Manufacturers of a Broad Line of Suppressors.
      a. Liebert Corp.
      b. Current Technology, Inc.
      c. Eaton Cutler-Hammer (Externally Mounted SPD only).
      d. Or equivalent.

2.2 SERVICE ENTRANCE SUPPRESSORS

A. Surge Protection Device Description: Non-modular type from the following list of approved manufacturers and products provided the product meets all requirements of these Specifications:
   1. Liebert Corporation – LM Series
   2. Current Technology, Inc. – CG Plus Series
   3. Eaton Cutler-Hammer - CPS Series
   4. The SPD will be provided with the following features and accessories:
   5. Repetitive Rating: SPD shall be capable of surviving at least 10,000 ANSI/IEEE C62.41 Category C3 impulses (10kA) without failure or less than 10% degradation of original performance characteristics.
   6. Fusing system to provide 200kAIC short circuit rating.
   7. Individually fused MOVs to provide system redundancy
   8. Integral disconnect (only when a breaker is NOT provided in distribution equipment)
   9. LED indicator lights for power and protection status.
   10. Audible alarm, with silencing switch, to indicate when protection has failed.
   11. One set of dry contacts rated at 5A and 250V ac, for remote monitoring of protection status.
   12. NEMA 12 Enclosure

B. Surge Protection Device Description: Modular type from the following list of approved manufacturers and products provided the product meets all requirements of these Specifications:
   1. Liebert Corporation – Interceptor II Series
   2. Current Technology, Inc. – SEL Series
   3. Eaton Cutler-Hammer – CPS Series
   4. The modular SPD will be provided with the following features and accessories:
   5. Repetitive Rating: SPD shall be capable of surviving at least 15,000 ANSI/IEEE C62.41 Category C3 impulses (10kA) without failure or less than 10% degradation of original performance characteristics.
   6. Fusing system to provide 200kAIC short circuit rating.
   7. Fabrication using bolted compression lugs for internal wiring.
   8. Integral disconnect switch (only when a breaker is NOT provided in distribution equipment).
   9. Individually fused MOVs to provide system redundancy.
   10. Built-in push-to-test feature that tests the integrity of each fuse/MOV pair. Manufacturers who accomplish by use of an external surge generator will provide the device with their quotation.
   11. Redundant replaceable modules

12. Arrangement with copper bus bars and for bolted connection to phase buses, neutral bus, and ground bus.
13. Arrangement with wire connection to phase buses, neutral bus, and ground bus.
14. LED indicator lights for power and protection status.
15. Audible alarm, with silencing switch, to indicate when protection has failed.
16. One set of dry contacts rated at 5A and 250V ac, for remote monitoring of protection status.
17. Surge event operations counter.
18. NEMA 4 Enclosure

C. Peak Single-Impulse Surge Current Rating: 250 kA per phase, 125kA per mode. Manufacturer will provide a higher maximum surge current rating if necessary to meet the repetitive requirements listed above.

D. Connection Means: Permanently wired.

E. Protection modes and UL 1449 SVR for grounded wye circuits with voltages of 480Y/277, 208Y/120, 3-phase, 4-wire circuits shall be as follows:
1. Line to Neutral: 700V for 480Y/277, 400V for 208Y/120.
2. Line to Ground: 700V for 480Y/277, 400V for 208Y/120.
3. Neutral to Ground: 700V for 480Y/277, 400V for 208Y/120.

F. Protection modes and UL 1449 SVR for 240/120V, single-phase, 3-wire circuits shall be as follows:
1. Line to Neutral: 400V.
2. Line to Ground: 400V.
3. Neutral to Ground: 400V.

2.3 ENCLOSURES

A. NEMA 250, with type matching the enclosure of panel or device being protected.

PART 3 – EXECUTION

3.1 INSTALLATION OF SURGE PROTECTION DEVICES

A. Install devices at service entrance on load side, with ground lead bonded to service entrance ground.

B. Install devices for panelboard and auxiliary panels with conductors or buses between suppressor and points of attachment as short and straight as possible. Locate the externally mounted SPD as close as possible to the panelboard neutral lug. Locate the recommended breaker as close as possible to the SPD location. The panelboard manufacturer will supply the breaker. Do not exceed manufacturer's recommended lead length. Do not bond neutral and ground.
1. Provide a 60A, multi-pole circuit breaker in the service entrance equipment and a 30A, multi-pole circuit breaker in branch panel equipment to serve as a dedicated disconnect for suppressor, unless otherwise indicated.

3.2 CONNECTIONS

A. Tighten electrical connectors and terminals according to manufacturer's published torque-tightening values. If manufacturer's torque values are not indicated, use those specified in UL 486A and UL 486B.

3.3 FIELD QUALITY CONTROL

A. Testing: Owner will engage a qualified testing and inspecting agency to perform field tests and inspections and prepare test reports.

B. Testing: Engage a qualified testing and inspecting agency to perform field tests and inspections and prepare test reports.

C. Testing: Perform the following field quality control testing:
   1. After installing surge protection devices, but before electrical circuitry has been energized, test for compliance with requirements.
   2. Complete startup checks according to manufacturer's written instructions.
   3. Perform each visual and mechanical inspection and electrical test stated in NETA ATS, Section 7.19. Certify compliance with test parameters.

D. Repair or replace malfunctioning units. Retest after repairs or replacements are made.

E. Manufacturer's Field Service: Engage a factory-authorized service representative to inspect field-assembled components and equipment installation, including piping and electrical connections. Report results in writing.
   1. Verify that electrical wiring installation complies with manufacturer's installation requirements.

3.4 DEMONSTRATION

A. Engage a factory-authorized service representative to train Owner's maintenance personnel to adjust, operate, and maintain surge protective devices.
   1. Train Owner's maintenance personnel on procedures and schedules for maintaining suppressors.
   2. Review data in maintenance manuals. Refer to Division 1 Section "Contract Closeout."
   3. Review data in maintenance manuals. Refer to Division 1 Section "Operation and Maintenance Data."
   4. Schedule training with Owner, through Architect, with at least seven days' advanced notice.

END OF SECTION

SECTION 263600 - MANUAL TRANSFER SWITCHES

PART 1 GENERAL

1.1 SCOPE

A. Furnish and install manual transfer switches with number of poles, amperage, voltage, and withstand current ratings as shown on the plans. Each manual transfer shall consist of a 3 position center off mechanically held power transfer switch unit and a mechanical operating mechanism to provide complete manual operation. All transfer switches and mechanical operating mechanism shall be the product of the same manufacturer.

B. ACCEPTABLE MANUFACTURERS
   1. ASCO Series 300 3MTQ (Basis of Design)
   2. Eaton MT-V Series
   3. Or equal
   4. Each alternate bid from basis of design must list any deviations from this specification.

1.2 CODES AND STANDARDS

A. The manual transfer switches and accessories shall conform to the requirements of:

B. UL 1008 Listed for Optional Standby Transfer Switches (Manual Transfer Switches)

C. UL 891 Switch Boards

D. CSA C22.2 No.178 –1978

E. IEC 60947-6-1 Low – Voltage Switchgear and Controller

F. NFPA 70 - National Electrical Code

G. NFPA 99 – Essential Electrical Systems for Health Care Facilities

H. IEEE Standard 446 - IEEE Recommended Practice for Emergency and Standby Power Systems for Commercial and Industrial Applications

I. UL 508 Industrial Control Equipment

J. NEC Article 700.3 (F)

K. International Standards Organization ISO 90estrication 01: 2008

L. RoHs compliant (Restriction of Hazardous Substances)

M. Seismic qualification – International Building Code & OSHPD to SDS level of 2.5

PART 2 PRODUCTS

2.1 MECHANICALLY HELD TRANSFER SWITCH

A. The transfer switch unit shall be manually operated and mechanically held. The switch shall be mechanically interlocked to ensure only one of three possible positions, Source 1, Source 2, or Center Off. Fused disconnect type switches shall not be acceptable.

B. The switch shall be positively locked and unaffected by momentary outages so that contact pressure is maintained at a constant value and temperature rise at the contacts is minimized for maximum reliability and operating life.

C. All main contacts shall be silver composition. Switches rated 600 amperes and above shall have segmented blow-on construction for high withstand current capability and be protected by separate arcing contacts.

D. Inspection of all contacts shall be possible from the front of the switch without disassembly of operating linkages and without disconnection of power conductors.

E. Designs utilizing components of molded-case circuit breakers, contactors, or parts thereof which are not intended for continuous duty, repetitive switching or transfer between two active power sources are not acceptable.

F. Where neutral conductors must be switched, the MTQ shall be provided with fully- rated neutral transfer contacts.

G. Where neutral conductors are to be solidly connected, a neutral terminal plate with fully-rated AL-CU pressure connectors shall be provided.

H. The MTQ shall be tested in accordance with UL 1008 for transfer switches. Switch ratings of 600 – 3000 ampere shall have endurance rating of 3000 cycles.

PART 3 EXECUTION

3.1 MANUAL OPERATIONS PROVISIONS

A. The transfer switch shall be arranged for manually actuated manual operation.

B. The manual transfer shall be actuated via a mechanical operating mechanism.

C. The manual operating handle shall be capable of external operation without opening the enclosure door.

D. It shall have the same contact to contact speed as automatic operation

E. There shall be three positions for manual operation:
   1. Connected to Source 1 (preferred)
   2. Connected to Source 2 (alternate)
   3. Connected to center off (disconnected position)

F. Switch position when connected to Source 1, or Source 2 shall be pad – lockable

3.2 ENCLOSURE

A. The 3MTQ shall be furnished in a NEMA type 3R enclosure unless otherwise shown on the plans.

B. Enclosures shall be free standing, floor mounted.

C. Enclosures shall be code gauge steel as per UL 50 with ANSI #61 powder coat finish.

D. Provide strip heater with thermostat for Type 3R enclosure requirements.

3.3 ADDITIONAL FEATURES

A. Mechanical position indicators (yellow) visible to the operator shall be included for Source 1 (preferred), Source 2, (alternate), and Center Off (disconnected).

B. LED indicators shall be available for Source 1 (preferred), and Source 2 (alternate).

C. Auxiliary position indicating contacts, rated 10 amps, 250 Vac shall be provided consisting of one closed when the MTQ is connected to Source 1 (preferred), and one contact closed when the MTQ is connected to Source 2 (alternate)

D. A form A contact shall be provided to indicate switch is in the Center Off (disconnected) position.

E. Manual Transfer Switch with Integrated Quick Connects contains 16 Series quick connects which provides a connecting means for connecting a portable generator.

F. Quick connects are generally located on Source 2 (emergency) side of this MTQ.
   1. For 1000A-1200A models, there shall be three (3) rows of up to 5 single pole connections.

G. All electrical connectors shall be 16 Series cam type single pole connectors; available color coded as per industry standard practice:
   1. 480V: phase 1 = brown, phase 2 = orange, phase 3 = yellow.
   2. Ground shall always be green.
   3. Neutral shall always be white.

3.4 ACCESSORIES

A. Optional Features
   1. Enclosure Heater(s)
      a. A 125 watt enclosure heater with transformer and thermostat (adjustable from 30° to 140 ° F) shall be provided. ASCO accessory 44G. This device shall be internally wired and powered.

B. Accessory 170 Base Package Bundle – Two form C contacts shall be connected to customer terminal block that operate when Source 1 and Source 2 voltage is present at transfer switch terminals. The following indicators shall be provided:
   1. Load Connected to Source 1 (Green).
   2. Load Connected to Source 2 (Red).
   3. Source 1 Available (Green).
   4. Source 2 Available (Red).
   5. Load Disconnect (Yellow)

3.5 ADDITIONAL REQUIREMENTS 7.01 WITHSTAND AND CLOSING RATINGS

A. The MTQ shall be rated to close on and withstand the available RMS symmetrical short circuit current at the MTQ terminals with the type of overcurrent protection shown on the plans.

B. Tests and Certification
   1. The complete MTQ shall be factory tested to ensure proper operation of the individual components and correct overall sequence of operation and to ensure compliance with the specification requirements.
   2. Upon request, the manufacturer shall provide a notarized letter certifying compliance with all of the requirements of this specification including compliance with the above codes and

standards, and withstand and closing ratings. The certification shall identify, by serial number(s), the equipment involved. No exceptions to the specifications, other than those stipulated at the time of the submittal, shall be included in the certification.

3. The MTQ manufacturer shall be certified to ISO 9001: 2008 International Quality Standard and the manufacturer shall have third party certification verifying quality assurance in design/development, production, installation and servicing in accordance with ISO 9001: 2008.

C. Service Representation

1. The MTQ manufacturer shall maintain a national service organization of company- employed personnel located throughout the contiguous United States. The service center's personnel must be factory trained and must be on call 24 hours a day, 365 days a year.
2. The manufacturer shall maintain records of switch shipments, by serial number, for a minimum of 20 years.
3. For ease of maintenance, the transfer switch nameplate shall include drawing numbers and serviceable part numbers.

END OF SECTION

SECTION 265100 - INTERIOR LIGHTING

PART 1 GENERAL

1.1 SUMMARY

A. Section includes interior luminaires, lamps, ballasts, and accessories.

B. LIGHTING AGENCIES, DISTRIBUTORS, ETC. ARE REQUIRED TO HAVE A COMPLETE FIXTURE SCHEDULE, ALL LIGHTING PLANS, ARCHITECTURAL REFLECTED CEILING PLANS AND SPECIFICATIONS IN ORDER TO BID THE PROJECT. PRICING SHALL NOT BE BASED ON CATALOG NUMBERS ALONE. COORDINATE AND PROVIDE ALL MOUNTING HARDWARE AND ACCESSORIES AS REQUIRED BY ARCHITECTURAL CEILING TYPES AND CEILING TILE CONFIGURATIONS. CHANGE ORDERS WILL NOT BE ALLOWED FOR FAILURE TO USE THE COMPLETE SET OF PLANS FOR BID PURPOSES.

1.2 RELATED SECTIONS:

A. Section 260526 - Grounding and Bonding for Electrical Systems.

B. Section 260533 - Raceway and Boxes for Electrical Systems.

1.3 REFERENCES

A. American National Standards Institute:
   1. ANSI_NEMA_ANSLG C78.377-2008 Specifications for the Chromaticity of Solid State Lighting Products.
   2. Illuminating Engineering Society (IES)
   3. IES LM-79-08
   4. IES LM-80-08
   5. US Department of Energy
   6. Lighting Facts

1.4 SUBMITTALS

A. Refer to Section 013300 - Submittal Requirements for submittal procedures.

B. General Conditions: Submittal procedures.

C. Shop Drawings: Indicate dimensions and components for each luminaire not standard product of manufacturer.

D. Product Data: Submit dimensions, ratings, and performance data.

E. Samples: Submit two color chips 3 x 3 inch (75 x 75 mm) in size illustrating luminaire finish color if requested by owner/architect/engineer.

1.5 QUALIFICATIONS

A. Manufacturer: Company specializing in manufacturing products specified in this section with minimum three years documented experience.

1.6 FIELD MEASUREMENTS

A. Verify field measurements prior to fabrication.

1.7 MAINTENANCE MATERIALS

A. General Conditions: Spare parts and maintenance products.

B. Furnish two of each plastic lens type.

C. Furnish (1) one of each type of driver type.

1.8 SUPPORT AND BRACING

A. All luminaires shall be installed with supports and bracing required for the seismic zone in which the project is located. See Section 260530.

PART 2 PRODUCTS

2.1 INTERIOR LUMINAIRES

A. Product Description: Complete interior luminaire assemblies, with features, options, and accessories as scheduled on drawings.

B. Refer to General Conditions for product options.

2.2 LED LUMINAIRES

A. Shall be tested according to the Illuminating Engineering Society of North America (IESNA) LM-79 and LM-80.
   1. Shall supply third party testing and data in compliance with Commercially Available LED Product Evaluation and Reporting (CALiPER) or National Voluntary Laboratory Accreditation Program (NVLAP).
   2. The testing laboratory must be listed on the U.S. Department of Energy's Solid-State Lighting website as an accredited testing laboratory.
   3. Manufacturers shall provide supporting evidence of lamp life calculation based on junction temperature and drive current upon request.

B. Shall be listed and labeled in accordance with the U.S. Department of Energy Lighting Facts Program.

C. Shall provide independent test laboratories IES photometrics which verify light levels.

D. Correlated Color Temperature (CCT) measured in Kelvin's shall meet Nominal CCTs and tolerances as defined in ANSI_NEMA_ANSLG C78.377-2008.
   1. Nominal CCT: 3000 K: 3045 ± 175 K
   2. Nominal CCT 3500 K: 3465 ± 245 K
   3. Nominal CCT: 4000 K: 3985 ± 275 K
   4. Nominal CCT 4500 K: 4503 ± 243 K
   5. Nominal CCT 5000 K: 5028 ± 283 K
   6. Nominal CCT 5700 K: 5665 ± 355 K
   7. Nominal CCT: 6500 K: 6530 ± 510 K

E. Minimum CRI > 80

2.3 RECESSED LUMINAIRES

A. Furnish all recessed luminaires in compliance with U.L. Standards for:

1. Suspended Ceilings Non-Type I.C.
   a. Where luminaire is used in a suspended ceiling.
2. Thermally Protected Fixture - Non-Type I.C.
   a. Where luminaire is installed in a ceiling with the possibility of overheating.
3. DC - IC Luminaire - Type I.C.
   a. Where luminaire is intended to be installed where direct contact with insulation is expected.

B. Check Architectural drawings, sections and specifications for insulation methods and ceiling types for additional information to determine the correct method to furnish luminaires for U.L. compliance.

2.4 STEMS

A. Ball aligned, swivel 30 or 45 degrees from vertical with swivel below canopy. Painted same color as luminaire trim unless otherwise noted.

2.5 EXIT LIGHTS

A. Exit lights furnished with 6" high stencil letters. Use green LED's. Verify color used with local codes, if a different color is required, indicate on the shop drawing submittal.

PART 3 EXECUTION

3.1 INSTALLATION

A. Support of luminaires responsibility of this Section.

B. See Spec Section 265030, Seismic Protection for Electrical Equipment for additional requirements.

C. Fixtures mounted in grid ceilings and in hard ceilings shall be supported independently of the ceiling or ceiling grid. See details on plans. For recessed fixtures in hard ceilings provide one support at each corner of 2’ x 4’ and larger luminaries and one at each end at opposite corners of 1’ x 4’ and 2’ x 2’ luminaries. In hard ceilings, galvanized hanger wires may be used.

D. Provide devices for securing luminaire to ceiling grid to comply with Article 410-16(c) of National Electrical Code. ("Earthquake Clips").

E. Wire luminaires with flexible conduit individually to junction boxes. Do not wire luminaire to luminaire.

F. Anchor high intensity discharge luminaires mounted in ceiling or on wall to structure. Support recessed ceiling luminaires independent of ceiling construction. Supports to consist of 1/4" diameter bolts or rods.

G. Support recessed luminaires with 3/4" black iron ceiling channel, one piece on each side of luminaire, anchored to ceiling system. Support large recessed luminaires over 20 pounds independent of furred ceiling system with rods, size as required, anchored to structure.

H. Support surface and pendant luminaires from 3/8" fixture stud in outlet box. Large surface or pendant luminaires (in excess of 20 pounds) with 3/8" rod run through the outlet box to structure and anchored independent of ceiling and conduit systems.

I. Provide plaster frames for recessed luminaries in plaster and concealed spline ceilings supported independent of ceiling construction with 1/4" rod anchored to structure.

J. Individual flexible connections to luminaires shall be made with 2#14 and 1#14 (ground) THHN-2 in 3/8" flexible conduit not to exceed 6'. Bond ground wire at each end. Provide additional wire(s) as required for a/b and similar switching schemes.

K. Stems on linear luminaires shall be installed as follows (except luminaires with slide grip hangers): First and last stem in row shall be installed in first knockout from end of luminaires; one stem shall be installed between each two luminaires connect intermediate stems to center joint where luminaires join and attach by use of "joining plates". Provide adequate number of stems to completely support luminaires and keep luminaires aligned straight and plumb.

L. Connect luminaires in continuous rows other than recessed grid type connected by nipples with locknuts and bushings.

M. Furnish complete manufacturers shop drawing for continuous luminaires showing mounting, ceiling interface and complete luminaire layout.

N. Locate all ceiling luminaires as indicated on Drawings.

O. Install surface mounted luminaires plumb and adjust to align with building lines and with each other. Secure to prevent movement.

P. Install recessed luminaires to permit removal from below.

Q. Install recessed luminaires where installed in rated assemblies using accessories and firestopping materials to meet regulatory requirements for fire rating.

R. Install wall-mounted luminaires at height as indicated on Drawings.

S. Install accessories furnished with each luminaire.

T. Make wiring connections to branch circuit using building wire with insulation suitable for temperature conditions within luminaire.

U. Install specified lamps in each luminaire.

V. Ground and bond interior luminaires in accordance with Section 260526.

3.2 FIELD QUALITY CONTROL

A. General Conditions: Field inspecting, testing, adjusting, and balancing.

B. Operate each luminaire after installation and connection. Inspect for proper connection and operation.

3.3 ADJUSTING

A. General Conditions: Testing, adjusting, and balancing.

B. Aim and adjust luminaires as indicated on Drawings.

3.4 CLEANING

A. General Conditions: Final cleaning.

B. Remove dirt and debris from enclosures.

C. Clean photometric control surfaces as recommended by manufacturer.

D. Clean finishes and touch up damage.

3.5 PROTECTION OF FINISHED WORK

A. General Conditions: Protecting finished work.

B. Relamp luminaires having failed lamps at Substantial Completion.

3.6 GUARANTEE

A. All luminaires, components, accessories etc., except lamps, shall be guaranteed against defects in materials and workmanship for one (1) year from date of in-service acceptance by owner. Replacement shall include parts and labor at the site of the work for the term of the warranty.

B. Lamps shall be guaranteed as specified above.

C. Lamp-ballast combination warranties of 5 years shall be included for the Osram Sylvania T8 lamp/ballast system in Paragraph 2.4.

END OF SECTION

SECTION 265600 - EXTERIOR LIGHTING

PART 1 GENERAL

1.1 SUMMARY

A. Section includes exterior luminaries, poles, and accessories.

1.2 REFERENCES

A. American National Standards Institute:
   1. ANSI C82.1 - American National Standard for Lamp Ballast-Line Frequency Fluorescent Lamp Ballast.
   2. ANSI C82.4 - American National Standard for Ballasts-for High-Intensity-Discharge and Low-Pressure Sodium Lamps (Multiple-Supply Type).
   3. ANSI O5.1 - Wood Poles, Specifications and Dimensions.
   4. ANSI_NEMA_ANSLG C78.377-2008 Specifications for the Chromaticity of Solid State Lighting Products.

B. Illuminating Engineering Society (IES)
   1. IES LM-79-08
   2. IES LM-80-08

C. U.S. Department of Energy
   1. Lighting Facts

1.3 SUBMITTALS

A. Refer to Section 013300 - Submittal Requirements for submittal procedures.

B. General Conditions: Submittal procedures.

C. Shop Drawings: Indicate dimensions and components for each luminaire not standard Product of manufacturer.

D. Product Data: Submit dimensions, ratings, and performance data.

E. Samples: Submit two color chips 3 x 3 inch (75 x 75 mm) in size illustrating luminaire finish color if requested by owner/architect/engineer.

1.4 QUALIFICATIONS

A. Manufacturer: Company specializing in manufacturing products specified in this section with minimum three years documented experience.

1.5 DELIVERY, STORAGE, AND HANDLING

A. General Conditions: Product storage and handling requirements.

1.6 COORDINATION

A. General Conditions: Coordination and project conditions.

B. Furnish bolt templates and pole mounting accessories to installer of pole foundations.

1.7 MAINTENANCE MATERIALS

A. General Conditions: Spare parts and maintenance products.

B. Furnish two gallons of touch-up paint for each different painted finish and color.

C. Furnish 10% drivers of each type installed.

PART 2 PRODUCTS

2.1 LUMINAIRES

A. Product Description: Complete exterior luminaire assemblies, with features, options, and accessories as scheduled.

B. Refer to General Conditions for product options.

2.2 LED LUMINAIRES

A. Shall be tested according to the Illuminating Engineering Society of North America (IESNA) LM-79 and LM-80.
   1. Shall supply third party testing and data in compliance with Commercially Available LED Product Evaluation and Reporting (CALiPER) or National Voluntary Laboratory Accreditation Program (NVLAP).
   2. The testing laboratory must be listed on the U.S. Department of Energy's Solid-State Lighting website as an accredited testing laboratory.
   3. Manufacturers shall provide supporting evidence of lamp life calculation based on junction temperature and drive current upon request.

B. Shall be listed and labeled in accordance with the U.S. Department of Energy Lighting Facts Program.

C. Shall provide independent test laboratories IES photometrics which verify light levels.

D. Correlated Color Temperature (CCT) measured in Kelvin's shall meet Nominal CCTs and tolerances as defined in ANSI_NEMA_ANSLF C78.377-2008.
   1. Nominal CCT: 3000 K: 3045 ± 175
   2. Nominal CCT 3500 K: 3465 ± 245 K
   3. Nominal CCT: 4000 K: 3985 ± 275K
   4. Nominal CCT 4500K: 4503 ± 243 K
   5. Nominal CCT 5000 K: 5028 ± 283 K
   6. Nominal CCT 5700 K: 5665 ± 355 K
   7. Nominal CCT: 6500 K: 6530 ± 510 K

2.3 METAL POLES

A. Material and Finish: As indicated in schedule on Drawings. Site poles shall match existing adjacent poles (height, diameter, type, color, finish, materials, etc).

B. Section Shape and Dimensions: as indicated in schedule on Drawings.

C. Height: As indicated on Drawings.

D. Base: As indicated on Drawings.

E. Accessories:
   1. Handhole.
   2. Anchor bolts.

PART 3 EXECUTION

3.1 EXAMINATION

A. General Conditions: Coordination and Project conditions.

B. Verify foundations are ready to receive fixtures.

3.2 EXISTING WORK

A. Disconnect and remove abandoned exterior luminaries.

B. Extend existing exterior luminaire installations using materials and methods as specified. Extend circuiting (wire/conduit) as required to maintain integrity of existing fixtures at site where fixtures are removed.

C. Clean and repair existing exterior luminaries to remain or to be reinstalled.

3.3 INSTALLATION

A. Install concrete bases for lighting poles at locations as indicated on Drawings, in accordance with Section 033000.

B. Install poles plumb. Install shims to adjust plumb. Grout around each base.

C. Install lamps in each luminaire.

D. Bond and ground luminaries, metal accessories and metal poles in accordance with Section 260526.

3.4 FIELD QUALITY CONTROL

A. General Conditions: Field inspecting, testing, adjusting, and balancing.

B. Operate each luminaire after installation and connection. Inspect for improper connections and operation.

C. Measure illumination levels to verify conformance with performance requirements.

D. Take measurements during night sky, without moon or with heavy overcast clouds effectively obscuring moon.

3.5 ADJUSTING

A. General Conditions: Testing, adjusting, and balancing.

B. Aim and adjust luminaries to provide illumination levels and distribution.

3.6 CLEANING

A. General Conditions: Final cleaning.

B. Clean photometric control surfaces as recommended by manufacturer.

C. Clean finishes and touch up damage.

3.7 PROTECTION OF FINISHED WORK

A. General Conditions: Protecting finished work.

B. Relamp luminaries having failed lamps at Substantial Completion.

END OF SECTION

SECTION 266000 - ELECTRICAL SYSTEMS TESTING

PART 1 GENERAL

1.1 GENERAL

A. The Contractor shall retain the services of an independent testing firm deemed by the Owner as qualified to perform International Electrical Testing Association (NETA) testing. Testing services shall be as described in this specification and shall be paid for and coordinated by the Contractor.

B. NETA testing procedures and requirements for tested values shall be in accordance with the most current edition of the NETA Acceptance Testing Specifications.

C. Any deficiencies or failures discovered during the NETA testing procedures shall be promptly corrected by the Contractor to ensure timely completion of the project and to minimize the time required for the independent testing firm to complete their work.

D. Independent testing firms shall be as listed below or approved equal.
   1. Nat'l Field Services
   2. Electrical Professional Consultants
   3. Electrical Reliability Services | Vertiv

1.2 TEST REPORTS

A. Intermediate Test Reports
   1. Intermediate test reports shall be issued by the independent testing firm immediately following each site visit. Intermediate test reports shall identify the general results of all field testing and field observations, and shall specifically identify any deficiencies, problems, or failures noted during the site visit.
   2. Intermediate test reports shall be issued/distributed to the electrical subcontractor, the general contractor, the electrical engineer, and to the Owner. The intent of this direct communication and/or notification to multiple parties is to ensure the 'independent' function of the independent testing firm and to prevent such information from being delayed or filtered by processing it through the electrical subcontractor and/or the general contractor.

B. Final Test Report
   1. Six copies of the final test report shall be issued by the independent testing firm following successful completion all required electrical systems testing. The final test report shall be typed, bound, and indexed, and shall include a cover page that identifies the project name, project location, and project number. The final test report shall include a separate section for each area of required testing (tests as summarized below).
      a. Grounding Systems
      b. Ground Fault Protection Systems
      c. Circuit Breakers (Over 100 Amps)
      d. Transformers (Dry Type)
      e. Low Voltage Feeders (up to 600 Volts) Serving Loads of 100 Amps or Greater
      f. Main Switchboard
      g. Distribution Boards
      h. Branch Circuit Panelboards
      i. Transfer Switches

j. Lighting Control System
k. Fire Alarm System

1.3 TESTING REQUIREMENTS

A. Grounding Systems
1. The following grounding system testing shall be conducted on two separate occasions, once prior to initializing electrical power for construction activities, and once when all electrical systems have been finalized.
2. Perform fall-of-potential testing of the main grounding electrode or grounding system in accordance with IEEE Standard No. 81. If suitable locations for test rods are not available, a low resistance dead earth or reference ground shall be utilized.
3. Perform point-to-point testing to determine the resistance (bonding) between the main grounding system and all major electrical equipment frames, system neutral, and/or derived neutral points.
4. Measure system neutral-to-ground insulation resistance with the neutral disconnect link temporarily removed (replace neutral disconnect link after testing). This testing shall be performed at the origination point of all separately derived systems.
5. Provide NEC 250 ground to neutral short testing as final step.
6. This testing shall be performed at the origination point of all separately derived systems.

B. Ground Fault Protection Systems
1. Perform pickup tests utilizing primary injection. Verify that the relay does not operate at 90% of the pickup setting. Verify pickup is less than 125% of setting or 1200 amps (whichever is less).
2. On summation type systems utilizing phase and neutral current sensors verify correct polarities by applying current to each phase-neutral current transformer pair).
3. Measure time delay of the relay at 150% of pickup or greater by injecting current into the sensor. Total trip time shall be electronically monitored.
4. Verify that the reduced control voltage tripping capability is 55% of rated voltage for systems with external control power (reference UL-1053).
5. Test zone interlock systems by simultaneous sensor current injection and monitoring of zone blocking function.

C. Circuit Breakers (Over 100 Amps)
1. Test requirements apply to adjustable molded case, insulated case, and metal frame circuit breakers.
2. Measure contact resistance by millivolt drop method at rated current or by digital low resistance ohmmeter method.
3. Test insulation resistance from pole-to-pole and from pole-to-ground with breaker closed and across open contacts of each phase.
4. Adjust trip settings in accordance with coordination study.
5. Measure instantaneous pickup current by primary current injection.
6. Measure long-time pickup and delay by primary current injection.
7. Measure short-time pickup and delay by primary current injection.
8. Verify trip unit reset operation.

D. Transformers (Dry Type)
1. Test insulation resistance winding-to-winding and winding-to-ground and calculate the polarization index.

2. Test turns ratio between windings for all tap positions. Verify that winding polarities match the transformer nameplate.
3. Measure resistance of each high voltage winding in each no-load tap-changer position. Also measure resistance of each low voltage winding in each load tap-changer position (when applicable).

E. Low Voltage Feeders (up to 600 Volts) Serving Loads of 100 Amps or Greater
1. Conduct megohm (Megger) testing of shield continuity resistance utilizing a megohmmeter.
2. Test insulation resistance phase-to-ground and phase-to-phase for one minute.
3. Test voltages shall be as recommended by the feeder manufacturer (or by NETA Acceptance Testing Specification).

F. Main Switchboard
1. Review cable testing report for each conductor.
2. Record all circuit breaker settings and very that each setting is in accordance with the coordination study.
3. Test and verify the accuracy of the load meter in each function and verify values can be seen on the campus control system.
4. Test and verify the operation of the shunt trip mechanism.
5. Inspect installation and functions of the surge suppression device and verify SPD lengths are as short as possible.

G. Distribution Boards
1. Review cable testing report for each conductor.
2. Record all circuit breaker settings and very that each setting is in accordance with the coordination study.
3. Inspect installation and functions of the surge suppression device and verify SPD lengths are as short as possible.

H. Branch Circuit Panels
1. Review cable testing report for each conductor.
2. Record all circuit breaker settings and very that each setting is in accordance with the coordination study.

I. Transfer Switch
1. Test and record all functions are operational.
2. Test and perform all by-pass functions.

J. Lighting Control System
1. See Spec Section 260923 for additional information.
2. Test each device for on/off operation by local and remote control by DDC system.
3. Verify and record timed on/off settings.
4. Test all motion sensors and dual level switching in each room.
5. Test on/off function of all exterior lighting and verify time settings.
6. Verify that each lighting fixture is working properly.
7. Perform a 90 minute run test of all emergency lighting with the building power off. Verify all emergency lighting fixtures both interior and exterior are providing required lighting levels at 90 minutes.

K. Fire Alarm System
1. Test all functions of the system.

2. Verify the function and address of each initiating and indicating device for supervisory, trouble and alarm signals.
3. Test and verify interface with HVAC equipment and controls.
4. Perform a loss of power test.
5. Verify required certifications and tagging.
6. Test the auto-dialer for functionality.
7. Perform all tests in the presence of the local Fire Marshall.

PART 2 PRODUCTS - NOT APPLICABLE

PART 3 EXECUTION - NOT APPLICABLE

END OF SECTION

SECTION 270500 - BASIC TELECOMMUNICATIONS REQUIREMENTS

PART 1 GENERAL

1.1 SUMMARY

A. This Section governs all systems provided and installed as part of Division 27 and provides References and General Requirements for other Division 27 Sections. This specification Section is part of the Thornton Police Department Indoor Firing Range Project. Additional specific telecommunications systems requirements are included in the individual Division 27 specifications and are intended to be in addition to and complement the requirements of this specification section. Where conflicts arise between this section and referenced sections, the more stringent of the requirements shall apply.

B. The work shown in the Contract Drawings is diagrammatic in nature and the Contractor is responsible for providing and coordinating final equipment arrangements, locations, phased activities and construction methods that minimize disruption to operations and provide complete and operational systems.

C. The work described in this Specification includes all labor, engineering, design work, materials, equipment and services necessary to install new, expand existing, and install owner-provided equipment as specified. Materials or labor not specifically mentioned in this specification, or not shown on the Contract Drawings, but required for proper installation, performance, and operation of the equipment or systems, shall be furnished and installed by the Contractor.

D. Systems specified in division 27 are extensions of operational systems. The Contractor shall coordinate interfaces to existing systems that are being extended into the Project to minimize disruption to existing systems operations. Any systems outages shall be approved in advance and scheduled with Owner.

E. The Contractor shall work with the Owner Project Manager to plan, coordinate, execute, test and commission the work required in Divisions 27 specifications and other systems referenced below.

F. Project Coordination
   1. This Project includes interfaces to other projects at Fernley. These projects include:
   2. Projects as encountered or identified by the General Contractor or Owner
   3. The Contractor is required to coordinate the work performed as part of the Project with related works projects so that Division 27 specialty electronic, IT, security, PA and Infrastructure systems that will be extended into related works projects to support the operational requirements of the related works projects are coordinated technically and from a managerial perspective (schedule), to ensure that interfaces between the various related works project and the Project are coordinated.

1.2 RELATED SECTIONS, INCLUDING BUT NOT LIMITED TO:

A. Division 01 – General Requirements.

B. Section 078400 for firestopping requirements

C. Division 08 - Doors

D. Division 23 – Mechanical Systems

E. Division 26 – Electrical

F. Section 270526 – Grounding and Bonding for Communications Systems

G. Section 270528 – Pathways for Communications Systems

H. Section 271000 – Premise Wiring Communications Systems

I. Section 271100 – Communications Equipment Room Fittings

J. Section 271116 – Communications Cabinets and Racks

K. Section 271300 – Communications Backbone Cabling

L. Section 271500 – Communications Horizontal Cabling

M. Refer to Low Voltage Responsibility Matrix provided on cover sheet of drawings for additional procurement and installation responsibilities. Responsibility Matrix incorporates responsibilities regarding installation, procurement ,etc. defined by the Owner.

1.3 SUBMITTALS

A. Comply with the requirements of Section 013300 – Submittal Requirements.

B. The Contractor shall develop a submittal matrix by Spec Section indicating all submittals required as part of the Division 27 Sections for review and approval by the Engineer/DOR. The matrix shall indicate all submittals required by each specification Section and shall be arranged by sequential Section numbers.

C. Submittals shall be submitted by Spec Section as a complete submittal for each Spec Section. Multiple or partial submittals for each specification section will not be accepted.

D. Submittals shall identify each item by the associated sub-section number within each Spec Section.

E. Each Submittal for each Spec Section shall include a cover page providing a list of all items submitted by the sub-section number and part number and description.
   1. Example:

1.	Specification Section 271500 – Comm Horiz. cabling
2.	2.4 UTP Cable – part #XXXXXXXXX
3.	2.5 UTP Cable Hardware – part #XXXXXXX
4.	2.6 Optical Fiber Cable – part #XXXXXXXXX
5.	2.7 Optical Fiber Cable Hardware – part #XXXXXXX
6.	

F. All submittal data shall be provided in electronic format in PDF files.

G. Submittals:
   1. The follow submittals and quantity of submittals shall be provided for all Division 27 Sections. The quantity of submittals shall be increased as indicated in the individual Division 27 Sections. The Contractor is advised to review all Sections for submittal quantities, overriding and additional submittal requirements.
      a. Shop Drawings
      b. Riser. Block and Point-To-Point Diagrams
      c. Product Data
      d. As-Builts / Record Documents
      e. Test Plans
      f. Test Data
      g. Samples: quantity as required and/or requested
   2. Contractor shall prepare coordination drawings detailing major elements, components, and systems of electrical equipment and materials in relationship with other systems, installations, and building components for Division 27 Sections.
   3. For Division 27 Sections, Contractor shall prepare drawings showing locations where space is limited for installation and access. Indicate where sequencing and coordination of installations are of importance to the efficient flow of the Work. Contractor shall provide the following:
      a. Provide complete front panel equipment fabrication dimensions with equipment locations of equipment racks and cabinets.
      b. Provide equipment wiring terminal point-to-point, color-coded, wiring diagrams. Drawings shall show each item of equipment, location, all wiring, and all connections. Wiring color code shall be as described by the Specifications. If no color code is specifically mentioned, the color code shall be as recommended by the equipment manufacturer.
      c. All sheets shall be sized to match Contract Drawings and shall be executed in a neat and professional manner (see Contract Drawings). All devices schematically represented on wiring diagrams shall be identified with room numbers corresponding to equipment locations in the building.
      d. Submittal shall include block diagram of equipment to show equipment relationship and signal flow paths.
      e. Provide coordination drawings that clearly indicate interfaces to related works projects
   4. Submittal information shall include the following manufacturer's published data and specific data for the system or equipment submittal for approval:
      a. Complete operating instructions.
      b. Complete schematic drawings for each item of equipment.
      c. Complete maintenance instructions.
   5. Contractor shall prepare floor plans, elevations, and details showing major equipment and end device locations. Show penetrations in floors, walls, and ceilings and their relationship to other penetrations and installations. Floor plan drawings shall indicate the proposed locations and routing of major raceway systems, equipment, and materials. Include the following:
      a. Clearances for servicing equipment, including space for equipment disassembly required for periodic maintenance.
      b. Fire-rated wall and floor penetrations.
      c. Equipment connections and support details.

   d. Seismic support details
   e. Sizes and location of required concrete pads and bases.
   f. Indicate scheduling, sequencing, movement, and positioning of large equipment into the building during construction.
6. 15 days prior to installation, the Contractor shall submit for review and approval by Owners Project Manager and the Engineer/DOR, shop drawings indicating the proposed layout of the Telecommunications Rooms indicating the initial coordinated layout of all equipment including HVAC and UPS equipment, equipment racks, equipment layouts within racks, elevations and placement of wall mounted equipment.
7. Contractor shall provide a compiled list of approved substitutions, Contract modifications, and actual equipment and materials installed.

H. Maintenance manuals: prepare maintenance manuals in accordance with requirements Section 013300 – Submittal Requirements and the requirements in the individual Division 27 Sections. Include the following information for equipment items:
   1. Description of function, normal operating characteristics and limitations, performance curves, engineering data and tests, and complete nomenclature and commercial numbers of replacement parts.
   2. Manufacturer's printed operating procedures to include start-up, break-in, and routine and normal operating instructions; regulation, control, stopping, shutdown, and emergency instructions; and summer and winter operating instructions.
   3. Provide normal and preventative maintenance requirements for each system.

I. Record documents: for Division 27 Sections, prepare record documents in accordance with the requirements of Section 013300 – Submittal Requirements and Section 01 78 40 – Contract Record Documents the requirements contained in the individual Sections. In addition to the requirements specified in Division 1, indicate installed conditions for:
   1. Raceway systems, size, and location, for both exterior and interior; locations of control devices; distribution and branch electrical circuitry and fuse and circuit breaker size and arrangements for systems and equipment specified in Division 27 Sections.
   2. Equipment locations (exposed and concealed), dimensioned from prominent building lines.
   3. Record documents to include all warranty information and warranty contact information.

J. As-built documents: the Contractor shall develop as-built drawings for all systems and installations provided as part of this project. These documents will reflect all revisions beyond the issued for construction documents and incorporate any information relayed via RFI or addendum.
   1. As-built documentation shall consist of the initial shop and submittal drawing documentation requirements for each system revised to reflect installed conditions including final equipment and wiring configurations, labeling and testing results.
   2. All as-built drawings shall be produced in REVIT Model and delivered to the Owners Project Manager and the Engineer/DOR in electronic form on CD ROM media.
   3. Indicating all equipment placement, conduit and cable routings, outlet locations and infrastructure and equipment connectivity. Provide:
      a. Floor Plan Drawings
      b. Equipment Room Wall Elevations
      c. Equipment Rack Elevations
      d. Equipment Signal Flow Diagrams
      e. Riser Diagrams

f. Block Diagrams
g. Infrastructure Cross Connect
h. Labeling
i. Other Requirements

K. Progress as-built documentation: in addition to the requirements for the development and submittal of as-built documents contained in the individual technical specification sections and this section, the contractor shall provide maintain a set of progress as-built documents for each system on site indicating work installed to date. The Contractor shall submit the real time as-built documents quarterly (every 3 months) to the engineer/DOR for review by Owners Project Manager and the Engineer/DOR. Submitted documents shall be in electronic form in and comply with the with the AutoCAD / BIM, format and submission requirements of this Section and the Project.

1.4 CODES, STANDARDS AND REFERENCES

A. The publications listed below form a part of this specification to the extent referenced. The publications are referred to in the text by basic designation only.

B. Specific reference in Specifications to codes, rules, regulations, standards, manufacturer's instructions or requirements of regulatory agencies shall mean the latest printed edition of each in effect at date of contract unless the Document is shown dated.

C. References:
1. American National Standards Institute (ANSI)
   a. NESC C2 (2012): National Electrical Safety Code
2. Code of Federal Regulations (CFR)
3. International Code Council
   a. International Building Code (IBC)
   b. International Fire Code (IFC)
4. National Fire Protection Association (NFPA)
   a. NFPA 70 (2015): National Electrical Code
   b. NFPA 72: National Fire Alarm and Signaling Code
   c. NFPA 262: Standard Method of Test for Flame Travel and Smoke of Wires and Cables for Use in Air-Handling Spaces
5. Telecommunications Industry Association (TIA)
   a. TIA-TSB 67: Additional Transmission Specifications for Unshielded Twisted Pair Cabling Systems
   b. ANSI/TIA-526-7 Measurement of Optical Power Loss of Installed Single-mode Fiber Cable Plant
   c. ANSI/TIA-526-14-A Optical Power Loss Measurements of Installed Multimode Fiber Cable Plant
   d. ANSI/TIA-526-14-C Optical Power Loss Measurements of Installed Multimode Fiber Cable Plant
   e. TIA 455: Standard Test Procedures for Fiber Optic Fibers, Cables, Transducers, Connecting and Terminating Devices
   f. TIA 455-78B: FOTP-61, Measurement of Fiber or Cable Attenuation Using an OTDR.
   g. ANSI/TIA-568.1-D Commercial Building Telecommunications Cabling
   h. ANSI/TIA-568.3-D Optical Fiber Cabling Components
   i. ANSI/TIA-568.4-D Broadband Coaxial Cabling and Components Standard

j. ANSI/TIA-568-C.1 - Commercial Building Telecommunications Cabling Standards
k. ANSI/TIA-568-C.2-D Balanced Twisted Pair Telecommunications Cabling and Components Standards
l. ANSI/TIA-568-C.3-D Optical Fiber Cabling Components Standard
m. TIA 568-B.2-6 Commercial Building Telecommunications Cabling Standard - Part 2: Balanced Twisted Pair Cabling Components. Addendum 6 – Category 6 Related Component Test Procedure.
n. TIA-568-B.1-4 Commercial Building Telecommunications Cabling Standard - Part 1: General Requirements. Addendum 4, Recognition of Category 6 and 850 nm Laser-Optimized 50/125 Multimode Fiber Optic Cabling
o. TIA-568-B.2-1 Commercial Building Telecommunications Cabling Standard - Part 2: Balanced Twisted Pair Components - Addendum 1 - Transmission Performance Specifications for 4-Pair 100 Ohm Category 6 Cabling.
p. TIA-854 (June 2001) A Full Duplex Ethernet Specification for 1000 Mbs/s (1000BASE-TX) Operating Over Category 6 Balanced Twister Pair Cabling. (ANSI/TIA-854-2001)
q. ANSI/TIA 568-B.2—10 March 2008, Amendment 10 - Transmission performance Specifications for 4-Pr. 100 Ohm Augmented Category 6 Cabling
r. ANSI/TIA-569-B, 569-D Commercial Building Standard for Telecommunications Pathways and Spaces
s. TIA-607-C Commercial Building Grounding (Earthing) and Bonding Requirements for Telecommunications
t. TIA-607-C Generic Telecommunications Bonding and Grounding (Earthing) for Customer Premises
u. ANSI/TIA-758-A, 758-B Customer-Owned Outside Plant Telecommunications Cabling Standard
v. TSB-155 Guidelines for the Assessment and Mitigation of Installed Category 6 Cabling to Support 10GBASE-T

6. BICSI® publications:
   a. BICSI - Telecommunications Distribution Methods Manual, 13th Edition
   b. BICSI - Customer-Owned Outside Plant Design Manual, 6th Edition
7. Institute Of Electrical and Electronic Engineers (IEEE)
   a. IEEE 802.3: Carrier Sense Multiple Access with Collision Detection (multiple sub-standards depending upon media).
8. Underwriters Laboratories (UL)
   a. UL 6 (2007): Electrical Rigid Metal Conduit
   b. UL 444: Communication Cables
   c. UL 797 (2007): Electrical Metallic Tubing
   d. UL 969: UL Standard for Safety Marking and Labeling Systems
   e. UL 1666: Standard Test for Flame Propagation Height of Electrical and Optical - Fiber Cables Installed Vertically in Shafts

D. Telecommunications Industry Standards
   1. Telecommunications Industries Association (TIA)
   2. American National Standards Institute - ANSI
   3. Building Industry Consulting Services International - BISCI
   4. Institute of Electrical and Electronic Engineers – IEEE
   5. National Electrical Code (NEC)
   6. Underwriters Laboratories (UL)

7. State and Local Codes
8. Seismic Codes
9. Others

E. Abbreviations
1. SCS – Structured Cabling System
2. PWCS – Premise Wiring Communication System

1.5 QUALITY ASSURANCE

A. Manufacturer: Each manufacturer shall have been in the business of manufacturing the specified system(s) equipment and software for at least five years.

B. Contractor experience: Contractor shall have at least five years' experience in installing, testing and commissioning electronic systems and equipment of the type used for projects of similar size and complexity; and shall provide documentation on three successful projects completed over the past five years of similar size and complexity.
1. City of Thornton has an approved contractor list for special systems contractors/integrators and include the following:
a. Communications/Data Cabling infrastructure: "American Datapath"
b. Audio/Visual Equipment: "Ford Audio Visual"
c. Security systems (CCTV and Access Control): "Surveillance 1"

C. Contractor shall submit proof to the satisfaction of the Owners Project Manager and the Engineer/DOR that the Contractor has:
1. Adequate plant and equipment to do the work properly and expeditiously.
2. Adequate staff with appropriate certifications and technical experience to accomplish the required work within the Project schedule.
3. Contractor shall have performed a minimum of three similar installations using software and hardware of the type described for the systems in Division 27, and for a premise wiring system of the same size and complexity as this project.
a. If Contractor has not had direct experience with all of the systems listed in Division 27 and other related sections, then Contractor shall furnish written documentation that the Contractor's subcontractor for the system meets the requirements listed above.
b. Contractor shall provide resumes of the persons assigned to this project detailing relevant experience with the equipment, software, and systems specified in Division 27 and other related Sections.
4. All equipment shall be installed by technicians trained by the equipment manufacturer or a recognized training school or course for the installations of this type system. The Contractor shall maintain all records of individuals at the jobsite and, if requested, show proof of a specific individual's training upon request.
5. Authorized distributor: Contractor shall provide proof with equipment submittals that the Company or Firm supplying the equipment is an approved representative for the sale, installation, and service of the equipment submitted for approval. Proof shall be required at the time of submittal approval that the Firm or Company is an established organization, within 100 miles of the Project site, and has successfully completed projects of this type; and has an acceptable reputation for providing service to installations of this type. Distributor, if requested, shall submit the name and location of a similar project and date of completion. Distributor must maintain a fully staffed and equipped service organization and must regularly offer maintenance service for systems of this type and size.

6. Operating system software: System software and language development software shall be existing, industry accepted, and of a type widely used in commercial systems.
7. Application software: The application software, substantially as offered, shall have been used for a minimum of two years and shall be written in a standard, industry accepted computer language.
8. Software: database software shall be a commercially available software program.
9. All contractors providing new or modifying existing software products currently running on operational City of Thornton IT and electronic systems or interfacing to existing or new IT or electronic systems shall be required to implement, prove and demonstrate the interoperability and functionality of software products including complete programs, software patches and software integration for systems and between interfacing and integrated subsystems though the Change Management Process. The Systems Manager shall be responsible for managing the Change Management Process.
10. All software shall be delivered with full documentation including all software error messages (Codes), code descriptions and troubleshooting guide. Text based instruction sets for error code resolution shall be provided along with supporting process and flow charts.
11. All Common off the Shelf (COTS) software products shall be provided with documentation stating where the COTS package will be used and be provided with all license information. All software delivered or created as part of this project shall be licensed to Owner.
12. Fully configured and installable software back-up copies shall be provided by the contractor for all soft provided for use on the project on CD ROM media.
13. Unapproved materials: The use of acceptable equipment does not relieve the Contractor of responsibility for use of any unapproved, substituted equipment. The Contractor, at no cost to the Owner, shall remove and replace the unapproved substitute with the specified equipment any equipment or system that shows evidence of improper operation, function, or size; or does not meet the performance, or quality requirements specified.
14. Contractor shall supply equipment, cabling, connectors, fixtures, and appurtenances required for a complete, operational, and fully functioning systems.

1.6 SUBSTITUTIONS OF EQUIPMENT

A. Where systems or equipment substitutions are proposed, Contractor shall submit one (1) complete catalog data proving that the proposed equipment and/or design are equal to or better than the equipment and design as specified.
   1. Submit request to the Owners Project Manager and the Engineer/DOR for approval before purchasing equipment or beginning installation. Contractor shall provide a compiled matrix of the substitution performance and features and the specified performance and features compared to:
   2. The performance criteria of the Specifications and performance features of the specified product.
   3. Cost of proposed product versus specified product including differences in installation costs.

B. Testing of samples: when, in the Engineer's opinion, the submittal data or the manufacturer's literature is insufficient for purposes of an evaluation, the Contractor shall arrange for sample items of equipment to be delivered to Owners Project Manager and the Engineer/DOR for his inspection and evaluation. If the information or sample provided is still not sufficient, or is inadequate, or unclear, and the Engineer/DOR cannot make a determination as to whether the proposed substitution meets the requirements of the Specification; then the Engineer/DOR may

require the Contractor to arrange for a field test of the equipment. Demonstration shall be at no cost to the Owner.

1.7 EQUIPMENT CERTIFICATION

A. Underwriters Laboratories Inc.: All equipment, including accessories to the system and including all wire and cable, shall be listed by the Underwriters Laboratories product directory and/or "The Electrical Construction Materials List."

B. Applicable standards compliance: In addition to the UL listing, all communication equipment shall meet applicable portions of Federal Communications Commission (FCC), TIA, ANSI, and Bellcore for product performance and quality.

C. Equipment to be certified by a Nationally Recognized Testing Laboratory (NRTL).

1.8 STORAGE AND DELIVERY

A. Equipment shall be delivered in original packages with labels intact and identification clearly marked.

B. Equipment and components shall be protected from the weather, humidity, temperature variations, dirt, dust, or other contaminants.

C. Equipment damaged prior to system acceptance shall be replaced at no cost to the Owner:
   1. Hardware
   2. Software

1.9 WARRANTY

A. Contractor shall provide 1-year warranty from time of construction completion of area of work and written final acceptance of the complete system on equipment, material, and labor unless noted otherwise in a specific Division 27 Section.

B. Provide duplicate notarized copies of warranties.

C. Execute and assemble warranties from subcontractors, suppliers, and manufacturers.

D. Provide table of contents and assemble in three-ring binder with a hard durable plastic cover. Internally subdivide the binder contents with permanent page dividers, with tab titling clearly typed under reinforced laminated plastic tabs.

E. Submit prior to final Application for Payment.

F. Hardware warranty duration: 1 year manufacturer's warranty offering. If the manufacturers standard offering is longer than 1 year, then Contractor shall provide the longer warranty.

G. The hardware warranty shall allow the replacement or repair of failed items at the discretion of Owner

H. Software warranty Duration: 1 Year manufacturers / developers warranty. If the manufacturers standard offering is longer than 1 year, then Contractor shall provide the longer warranty

I. The Software warranty shall allow for the replacement or repair of software at the discretion of the Owners IT. All software necessary to compile, change and maintain software developed for the systems are included in this warranty. Software upgrades shall be provided during the

warranty period and their implementation shall be coordinated with the Systems Manager through the change management process.

J. Warranty shall begin after Final Acceptance. Contractor shall provide timely response and non-warranty repairs until warranty begins at Final Acceptance.

K. For items of Work delayed beyond date of Substantial Completion, provide updated submittal within ten days after acceptance, listing date of acceptance as start of warranty period.

L. The Contractor shall be responsible for negotiating a service level agreement with the Owner for all systems provided and maintained by the Contractor.

M. Warranty, Operations, Maintenance Characteristics (for IT systems):
   1. Warranty Includes:
      a. Repair of equipment or request for contractor to return to site to address workmanship issues.
      b. Contractor to be responsible for shipment non-functioning device to the manufacturer for repair via their RMA (Return Merchandise Authorization) process.
      c. Warranty does not include the contractor returning to the site to resolve system issues, perform move/add/change (MAC) work, or to resolve catastrophic outages for system operation prior to Final acceptance.
      d. Includes repair of software/hardware defects via firmware upgrades, software patches.
      e. Create and maintains warranty log
   2. Maintenance:
      a. Break/fix services. Includes an on-site service provision.
      b. Contractor responds to address minor, major, and catastrophic system problems as they occur.
      c. Requires that the contractor meet a service level agreement (with determined response time, time to restore system to operation, and explanation of cause and cure).
      d. Attends regular meetings to review/discuss/plan outstanding system problems
      e. Creation and update of maintenance log
      f. Contractor performs triage to assess system/device problem and resolves or reports to contractor's maintenance team for resolution
   3. Operation:
      a. Preventative maintenance (PM), including cleaning field equipment
         1) Maintaining the Telecom rooms as clean rooms (vacuuming dust from equipment, dry-mopping)
         2) Other PM tasks as defined by the manufacturer and Owner
      b. Performs daily system health checks
      c. Routinely monitors equipment in Telecom rooms (and Telecom room, rack ambient environment) for anomalies and responds or reports to the systems maintenance team to respond and resolve
      d. Creates and Maintains pm/service logs
      e. Maintains a log of all configuration changes
      f. Performs configuration changes as needed to support the project operations
      g. Adds/deletes users. Modifies users permission levels
      h. Updates logical documentation (i.e. logical names for network ports to identify where the device using that port terminates in the field) to reflect current system environment
      i. Follows Owners Change Management process

j. Performs system backups, system failover/failback tests, other scheduled activities
k. Attends regular meetings to review/discuss/plan outstanding MAC work
l. Owner staff shadows this team to transition system knowledge

4. Time frame for when Warranty, Operations, and maintenance is required
   a. Substantial Completion through Final Acceptance
   b. Warranty/Operation/Maintenance (WOM) – from beneficial occupancy (or substantial completion) through final system acceptance
      1) Unlimited regular time callbacks are included with the applicable response time. Regular time will be Monday through Friday, 6:00am to 6:00pmpm, exclusive of holidays. Overtimetime call backs originating from an operational error related to the performance requirements of the equipment shall be borne by the Contractor.
5. Final acceptance:
   a. Warranty – 1 year after final acceptance
   b. Maintenance – also provided within 1 year after final acceptance.

1.10 ON-SITE PERSONNEL REQUIREMENTS

A. The Contractor Project Manager in conjunction with Owners Project Manager and the Architect shall determine staff and schedule requirements.

B. Technical on site-support staff shall continue through systems acceptance.

PART 2 PRODUCTS - NOT USED

PART 3 EXECUTION

3.1 GENERAL

A. Coordinate the requirements of the Division 27 Sections.

B. System installation and construction methods shall conform to the requirements of the Owner and applicable building codes adopted by City of Thornton.

C. Contractor shall install equipment to meet seismic zone requirements of the City and the IBC.
   1. Where undefined by codes and standards, Contractor shall apply a safety factor of at least 2 times the rated load to all fastenings and supports.

D. The Contractor shall install all system components including furnished equipment and appurtenances in accordance with the manufacturer's instructions, NFPA 70, ANSI-C2, and State and local codes and as indicated, and shall furnish all cables, connectors, terminators, interconnections, services, and adjustments required for a complete and operable system.

E. Contractor shall check with Engineer/DOR to verify areas that are permit-required confined spaces as defined in OSHA 29 CFR Part 1910.
   1. Contractor shall comply with requirements of OSHA 29 CFR Part 1910 when working in permit-required confined spaces.

F. Avoid disturbance of materials known to contain hazardous materials in making acceptable modifications of raceway routing, mounting of equipment, and other work.
   1. Do not mount conduit, equipment, hangers, and other accessories on surface materials known to contain asbestos or other hazardous materials. Where asbestos is encountered,

the Contractor shall notify the Construction Manger immediately. Abatement shall be performed by others.

2. If Contractor encounters hazardous materials or conditions not shown on drawings, Contractor shall:
3. Stop work immediately.
4. Vacate area.
5. Immediately notify Construction Manager of condition encountered.
6. Contractor shall not enter area or work in area until receiving written authorization from Construction Manager.

G. All system components and appurtenances shall be installed in accordance with the manufacturer's instructions and as shown.

3.2 ROUTING OF CONDUITS

A. Conduits installed in support of the telecommunications and Ethernet connected IT systems indicated in Division 27 systems is shown on the drawings in a diagrammatic form. It is the Contractors responsibility to coordinate with other trades and architectural and structural features and conditions and route conduits between end devices and serving Telecommunications Rooms (TR) and other spaces indicated on the drawings and schedules to minimize distances. The maximum allowable cable distance between an Ethernet connected device and the serving "Port" on the Ethernet switch located in the serving TR is 295 feet. This requirement does not apply to fiber optic cables or high count category 3 voice-grade copper cables. The Contractor shall advise the engineer/DOR where after pre-planning conduit routings to minimize distances between the TR termination point and the outlet, locations that exceed the 295' rule. The contractor shall true tape all conduits as required to confirm distance will be within cable specification including service loops and vertical runs.

3.3 INSPECTIONS

A. Contractor shall not begin work on site or submit shop drawings, product data, design data, or other technical submittals, until after making a detailed inspection of existing site.

B. Contractor shall verify:
   1. Information presented in Contract Documents is correct.
   2. Installation of equipment and work can be accomplished as shown in Contract Documents.
   3. Contractor's proposed equipment and methods of installation are compatible with existing conditions.

C. Take field measurements and record other data required for preparation of shop drawings and other submittals.

D. Variations: Contract Drawings and other Documents indicate basic location, arrangement, and routing of equipment and components.

E. Improvements and modifications of layout to accommodate Contractor's proposed equipment, field conditions, and detailed designs will be considered by the Engineer/DOR.
   1. Do not proceed on incorporation of modifications and associated work until receiving written approval from the Engineer/DOR.

F. Reporting: Prepare report describing site investigation. Indicate noted conflicts between Contract Documents and site investigation information.

1. Describe proposed modifications and reasons for change.
2. Provide specification sheets and written functional requirements to support findings.
3. Prepare drawings and other data required to show variations and corrections.
4. Associated costs to accommodate existing site conditions.
5. If work schedule is affected by site investigation, revise initial progress schedule.

G. Certify that site investigation has been performed and that, except for items noted, conditions shown and described in Contract Documents are correct, and equipment can be installed, and work can be performed as specified without conflicts with existing site conditions.

H. Installation drawings. Prior to installation of any equipment, the Contractor shall submit a copy of the installation drawings in latest AutoCAD or REVIT format and as defined by the contract per the Owner Design Standards for review by the Engineer/DOR. Contractor shall provide the copy on a compact disc (CD), and shall submit the CD to the Engineer/DOR. The drawings shall include all installation information including, but not limited to, that described in Part 1. Drawings shall also include actual conduit routing and results of all measurements and tests.

3.4 INSTALLATION

A. General: The Contractor shall correlate final equipment locations with governing engineering drawings and lay out all work before installation so that all trades may install equipment in spaces available. Coordinate device placement with the Construction Manager and Engineer/DOR where applicable. The Contractor shall provide coordination as required for the installation of the system in a neat and workmanlike manner. Sequence, coordinate, and integrate the various elements of electrical systems, materials, and equipment. Comply with the following requirements:

1. Coordinate electrical systems, equipment, and materials installation with other building components and trades.
2. Verify all dimensions by field measurements.
3. Arrange for chases, slots, and openings in other building components during progress of construction, to allow for electrical installations.
4. Sequence, coordinate, and integrate installations of materials and equipment for efficient flow of the Work. Give particular attention to large equipment requiring positioning prior to closing spaces.
5. Where mounting heights are not detailed or dimensioned, install systems, materials, and equipment per code to provide the maximum headroom possible.
6. Coordinate connection of electrical systems with exterior underground and overhead utilities and services. Pay particular attention to requirements for access and service of the equipment in choosing final equipment locations. Comply with requirements of governing regulations, franchised service companies, and controlling agencies. Provide required connection for each service.
7. Install systems, materials, and equipment to conform with approved submittal data, including coordination drawings, to greatest extent possible. Conform to arrangements indicated by the Contract Documents, recognizing that portions of the Work are shown only in diagrammatic form. Where coordination requirements conflict with individual system requirements, refer conflict to the Engineer/DOR.
8. Install systems, materials, and equipment level and plumb, parallel and perpendicular to other building systems and components, where installed exposed in finished spaces.

9. Install electrical equipment to facilitate servicing, maintenance, and repair or replacement of equipment components. As much as practical, connect equipment for ease of disconnecting, with minimum of interference with other installations.
10. Install access panel or doors where units are concealed behind inaccessible surfaces.

3.5 SYSTEMS STARTUP

A. The Contractor shall not apply power until after:
   1. The systems and all components have been installed and visually inspected for installation compliance with manufacturer's recommendations and all connections are secure and verified for accuracy or connectivity
   2. All power supplies have been verified to be producing correct voltage and frequency to supported equipment.
   3. Executing a correct start-up sequence does not relieve the Contractor from responsibility for damage to equipment or collateral damage to other equipment resulting from incorrect connections, defective equipment or workmanship installed or provided by the Contractor.

3.6 CUTTING AND PATCHING

A. The following requirements shall apply to all work performed by the Contractor.
   1. Perform cutting, fitting, and patching of surfaces, and provide equipment and materials required to:
   2. Uncover Work to provide for installation of ill-timed Work.
   3. Remove and replace defective Work.
   4. Remove and replace Work not conforming to requirements of the Contract Documents.
   5. Remove samples of installed Work as specified for testing.
   6. Install equipment and materials.
   7. Upon written instructions from the Engineer/DOR, uncover and restore Work to provide for observation of concealed Work.
   8. Protect the structure, furnishings, finishes, and adjacent materials not indicated or scheduled to be removed.
   9. Provide and maintain temporary partitions or dust barriers adequate to prevent the spread of dust and dirt to adjacent areas.
   10. Protection of Installed Work: During cutting and patching operations, protect adjacent installations.
   11. Patch existing finished surfaces and building components using new materials matching existing materials and experienced Installers. Installers' qualifications refer to the materials and methods required for the surface and building components being patched.
   12. Patch finished surfaces and building components using new materials specified for the original installation and experienced Installers. Installers' qualifications refer to the materials and methods required for the surface and building components being patched.
   13. All openings created by this Contractor or by other contractors for use by this Contractor in rated surfaces such as fire-rated walls, floors, or ceilings shall be patched and made tight in a manner to conform to the fire rating for the surface penetrated and installed and tested in accordance with Sections UBC 709.6, 709.7, 710.2, 710.5.

3.7 TESTING

A. The Contractor shall provide all personnel, equipment, instrumentation, and supplies necessary to perform all testing.

B. Engineer/DOR and/or Owner representatives will witness all field tests.

C. Contractor shall perform test and submit test results to Engineer/DOR for approval and as required by individual specification sections. Refer to the technical specifications for specific testing criteria and requirements.

3.8 DAILY SITE MAINTENANCE AND CLEAN-UP

A. At the end of each work day (period) the Contractor shall be required to clean-up the work area and all construction debris such that the site is clean and usable without hazard to workers.

3.9 COMPUTERIZED MAINTENANCE MANAGEMENT SYSTEM – DATA CAPTURE

A. For the purposes of providing data for input by others into a future Maintenance Management Systems (CMMS) database, the Contractor shall be responsible for the cataloging all equipment installed and delivered spares. Specific information that is required to be documented in an Excel spreadsheet for delivery to Owner includes:
   1. Manufacturer
   2. Model Number
   3. Serial Number
   4. Function
   5. Location
   6. ID (location to) Preventative Maintenance requirements

B. The Contractor shall be responsible for the application of asset management tags to contractor provided equipment (installed and spares). Asset management tags will be provided to the Contractor by Owners Project Manager.

3.10 FINAL INSPECTION AND ACCEPTANCE

A. Before requesting a final inspection, all systems shall be inspected by the equipment manufacturer's representative and the Contractor. When the system and all equipment is in place and is operating properly, the manufacturer's representative shall develop and complete a checkout memo and have all equipment ready for final inspection. One week prior to final inspection, final as-built drawings and brochures shall be provided to the Engineer/DOR.

PART 4 MEASUREMENT

4.1 METHOD OF MEASUREMENT

A. Percent of work complete shall be the method for measuring progress.

PART 5 PAYMENT

5.1 METHOD OF PAYMENT

A. Percent of work complete based on the approved schedule of values.

END OF SECTION

SECTION 270526 - GROUNDING AND BONDING FOR COMMUNICATIONS SYSTEMS

PART 1 GENERAL

1.1 RELATED DOCUMENTS

A. Drawings and general provisions of the Contract, including General and Special Conditions and Division 01 Specification Sections, apply to this Section.

1.2 SUMMARY

A. Section Includes:
   1. Grounding conductors.
   2. Grounding connectors.
   3. Grounding busbars.
   4. Grounding rods.
   5. Grounding labeling.

1.3 RELATED SECTIONS:

A. Division 26 Sections

B. Alternates: Refer to Division 01 for description of Work in this Section affected by Alternates.

1.4 DEFINITIONS

A. BCT: Bonding conductor for telecommunications.

B. EMT: Electrical metallic tubing.

C. NRTL: Nationally Recognized Testing Laboratory

D. TGB: Telecommunications grounding busbar.

E. TMGB: Telecommunications main grounding busbar.

F. TBC: Telecommunications Bonding Conductor

G. PBB: Primary Bonding Busbar

H. SBB: Secondary Bonding Busbar

1.5 SYSTEM DESCRIPTION

A. Provide each communications room with a ground bar for equipment bonding.

B. Provide minimum #6 copper grounding conductor from each communications room ground bar and connect to nearest referenced ground bar in the electrical room.

C. Bond together all communications equipment racks, cable trays, ladder racks, equipment enclosures, and metal raceway systems. Connect to the nearest equipment ground bar.

D. Requirements of this section shall be considered as a supplement to the requirements of Division 26.

1.6 ACTION SUBMITTALS

A. Refer to Section 013300 - Submittal Requirements for submittal procedures.

B. Product Data: For each type of product.
   1. Include data substantiating that materials comply with requirements.

C. Shop Drawings: For communications equipment room signal reference grid. Include plans, elevations, sections, details, and attachments to other work.

1.7 INFORMATIONAL SUBMITTALS

A. As-Built Data: Plans showing as-built locations of grounding and bonding infrastructure, including the following:
   1. Ground rods.
   2. Ground and roof rings.
   3. TBC, PBB, SBB, and routing of their bonding conductors.

B. Qualification Data: For Installer, installation supervisor, and field inspector.

C. Qualification Data: For testing agency and testing agency's field supervisor.

D. Field quality-control reports.

1.8 CLOSEOUT SUBMITTALS

A. Operation and Maintenance Data: For grounding to include in emergency, operation, and maintenance manuals.
   1. In addition to items specified in any sections identifying "Operation and Maintenance Data," include the following:
      a. Result of the ground-resistance test, measured at the point of TBC connection.
      b. Result of the bonding-resistance test at each SBB and its nearest grounding electrode.
      c. Field quality-control test results.

B. As-Built Plans: Submit complete as-built plans of all Work, including interface with other Work, in accordance with requirements as specified in Section 013300 "Submittal Procedures".

1.9 QUALITY ASSURANCE

A. Installer Qualifications: Cabling Installer must have personnel certified by BICSI on staff.
   1. Installation Supervision: Installation shall be under the direct supervision of ITS Technician, who shall be present at all times when Work of this Section is performed at Project site.
   2. Field Inspector: Currently registered by BICSI as ITS Installer 2 to perform the on-site inspection.

B. Comply with the requirements of the reference standards noted herein, except where more stringent requirements are listed herein or otherwise required by the Contract Documents.

C. NFPA Compliance: NFPA 70 "National Electrical Code (NEC)," as adopted and amended by the City.

D. UL Compliance: Applicable requirements of UL Standards Nos. 467 "Electrical Grounding and Bonding Equipment," and 869, "Electrical Service Equipment," pertaining to grounding and bonding of systems, circuits and equipment. In addition, require compliance with UL Std 486A, "Wire Connectors." Grounding and bonding products shall be UL-listed and labeled for the use.

E. IEEE Compliance: Applicable requirements and recommended installation practices of IEEE Standards 80, 81, 141 and 142 pertaining to grounding and bonding of systems, circuits and equipment.

1.10 CONSTRUCTION WASTE MANAGEMENT

A. Construction waste shall be managed in accordance with provisions of Section 017419 "Construction Waste Management and Disposal". Documentation shall be submitted to satisfy the requirements of that Section.

PART 2 PRODUCTS

2.1 GENERAL

A. Grounding Connection Accessories:
   1. Electrical insulating tape, heat-shrinkable insulating tubing, welding materials, bonding straps, as recommended by accessories manufacturers for type of service required.

B. Exothermic welded connections are required where grounding conductors connect to underground grounding conductors and to underground grounding electrodes, and for bonding to steel. All underground connections shall be exothermic welded.

C. All ground wires shall be copper except where stainless steel is specified for manholes, sized according to the NEC or as shown on the drawings whichever is larger.

2.2 SYSTEM COMPONENTS

A. Comply with TIA-607-C.

2.3 CONDUCTORS

A. Manufacturers: Subject to compliance with requirements, provide products by one of the following:
   1. Harger Lightning and Grounding.
   2. Panduit Corp.
   3. Tyco Electronics Corp.
   4. or approved equal.

B. Comply with UL 486A-486B.

C. Insulated Conductors: Stranded copper wire, green or green with yellow stripe insulation, insulated for 600 V, and complying with UL 83.
   1. Ground wire for custom-length equipment ground jumpers shall be No. 6 AWG, 19-strand, UL-listed, Type THHN wire.
   2. Cable Tray and Ladder Rack Equipment Grounding Wire: No. 6 AWG.

D. Cable Tray Grounding Jumper:
   1. Not smaller than No. 6 AWG 26 kcmils and not longer than 12 inches. If jumper is a wire, it shall have a crimped grounding lug with one hole and standard barrel for one crimp. If jumper is a flexible braid, it shall have a one- or two-hole ferrule. Attach with grounding screw or connector provided by cable tray manufacturer.

E. Bare Copper Conductors:

1. Solid Conductors: ASTM B 3.
2. Stranded Conductors: ASTM B 8.
3. Tinned Conductors: ASTM B 33.
4. Bonding Cable: 28 kcmils, 14 strands of No. 17 AWG conductor, and 1/4 inch in diameter.
5. Bonding Conductor: No. 4 or No. 6 AWG, stranded conductor.
6. Bonding Jumper: Tinned-copper tape, braided conductors terminated with two-hole copper ferrules; 1-5/8 inches wide and 1/16 inch thick.

2.4 CONNECTORS

A. Irreversible connectors listed for the purpose. Listed by an NRTL as complying with NFPA 70 for specific types, sizes, and combinations of conductors and other items connected. Comply with UL 486A-486B.

B. Manufacturers: Subject to compliance with requirements, provide products by one of the following:
   1. Burndy; Part of Hubbell Electrical Systems.
   2. Chatsworth Products, Inc.
   3. Harger Lightning and Grounding.
   4. Panduit Corp.
   5. Tyco Electronics Corp.
   6. or approved equal.

C. Compression Wire Connectors: Crimp-and-compress connectors that bond to the conductor when the connector is compressed around the conductor. Comply with UL 467.
   1. Electroplated tinned copper, C and H shaped.

D. Signal Reference Grid Connectors: Combination of compression wire connectors, access floor grounding clamps, bronze U-bolt grounding clamps, and copper split-bolt connectors, designed for the purpose.

E. Busbar Connectors: Cast silicon bronze, solderless compression or exothermic-type, mechanical connector; with a long barrel and two holes spaced on 5/8- or 1-inch centers for a two-bolt connection to the busbar.

F. Welded Connectors: Exothermic-welding kits of types recommended by kit manufacturer for materials being joined and installation conditions.

2.5 GROUNDING BUSBARS

A. Manufacturers: Subject to compliance with requirements, provide products by one of the following:
   1. Chatsworth Products, Inc.
   2. Harger Lightning and Grounding.
   3. Panduit Corp.
   4. or approved equal.

B. PBB: Predrilled, wall-mounted, rectangular bars of hard-drawn solid copper, ¼ inch thick by 4 inches in height and 16 inches in length, or as indicated on Drawings. The busbar shall be NRTL listed for use as PBB and shall comply with TIA-607-A.
   1. Predrilling shall be with holes for use with lugs specified in this Section.

2. Mounting Hardware: Stand-off brackets that provide a 2-inch clearance to access the rear of the busbar. Brackets and bolts shall be stainless steel.
3. Stand-off insulators for mounting shall be Lexan or PVC. Comply with UL 891 for use in 600-V switchboards, impulse tested at 5000 V.

C. SBB: Predrilled rectangular bars of hard-drawn solid copper, 1/4 inch thick by 4 inches in height and 16 inches in length or as indicated on Drawings. The busbar shall be for wall mounting, shall be NRTL listed as complying with UL 467, and shall comply with TIA-607-A.
1. Predrilling shall be with holes for use with lugs specified in this Section.
2. Mounting Hardware: Stand-off brackets that provide at least a 2-inch clearance to access the rear of the busbar. Brackets and bolts shall be stainless steel.
3. Stand-off insulators for mounting shall be Lexan or PVC. Comply with UL 891 for use in 600-V switchboards, impulse tested at 5000 V.

D. Rack and Cabinet Grounding Busbars: Rectangular bars of hard-drawn solid copper, accepting conductors ranging from No. 14 to No. 2/0 AWG, NRTL listed as complying with UL 467, and complying with TIA-607-A. Predrilling shall be with holes for use with lugs specified in this Section.
1. Cabinet-Mounted Busbar: Terminal block, with stainless-steel or copper-plated hardware for attachment to the cabinet.
2. Rack-Mounted Horizontal Busbar: Designed for mounting in 19- or 23-inch equipment racks. Include a copper splice bar for transitioning to an adjoining rack, and stainless-steel or copper-plated hardware for attachment to the rack.
3. Rack-Mounted Vertical Busbar: 72 or 36 inches long, with stainless-steel or copper-plated hardware for attachment to the rack.

2.6 GROUND RODS

A. Manufacturers: Subject to compliance with requirements, provide products by one of the following:
1. Harger Lightning and Grounding.
2. Tyco Electronics Corp.
3. or approved equal.

B. Ground Rods: Copper-clad steel, 3/4 inch by minimum 10 feet in diameter.
1. In manholes, ground rods shall be stainless steel ¾-inch diameter and a minimum length of 10 feet.

2.7 LABELING

A. Manufacturers: Subject to compliance with requirements, provide products by one of the following:
1. Brother International Corporation.
2. HellermannTyton.
3. Panduit Corp.
4. or approved equal.

B. Comply with TIA-606-C and UL 969 for a system of labeling materials, including label stocks, laminating adhesives, and inks used by label printers.

C. Provide labeling on grounding conductor at ground bus bar indicating source connection location.

D. Adhesive Film Label with Clear Protective Overlay: Machine printed, in black, by thermal transfer or equivalent process. Minimum letter height shall be 3/8 inch. Overlay shall provide a weatherproof and UV-resistant seal for label.

PART 3 EXECUTION

3.1 EXAMINATION

A. Examine the ac grounding electrode system and equipment grounding for compliance with requirements for maximum ground-resistance level and other conditions affecting performance of grounding and bonding of the electrical system.

B. Inspect the test results of the ac grounding system measured at the point of TBC connection.

C. Prepare written report, endorsed by Installer, listing conditions detrimental to performance of the Work.

D. Proceed with connection of the TBC only after unsatisfactory conditions have been corrected.

3.2 INSTALLATION

A. Bonding shall include the ac utility power service entrance, the communications cable entrance, and the grounding electrode system. The bonding of these elements shall form a loop so that each element is connected to at least two others.

B. Comply with NECA 1.

C. Comply with TIA-607-C.

D. Supplementary Grounding Electrode: Use grounding mats, where indicated, or driven ground rods. Install ground rods in suitable recessed well; fill with gravel after connection is made.

E. Provide a No. 6 AWG and ground plate to each Communications Room or board. Connect to nearest Electrical Room ground plate.

F. Provide isolated and insulated ground conductors for all microprocessor and data processing equipment.

G. Tighten grounding and bonding connectors and terminals, including screws and bolts, in accordance with manufacturer's published torque tightening values for connectors and bolts. Where manufacturer's torquing requirements are not indicated, connections are to be tightened to comply with tightening torque values specified in UL 486A to assure permanent and effective grounding.

H. Provide code-sized ground cable bonding jumpers, installed with ground clamps, across all conduit expansion couplings and fittings, including flexible steel conduit used as expansion fittings.

I. Provide a corrosion-resistant finish to field connections, buried metallic bonding products, and where factory applied protective coatings have been destroyed.

J. All continuous runs of cable tray and all isolated sections of cable tray shall be bonded and grounded.

3.3 APPLICATION

A. Conductors: Install solid conductor for No. 8 AWG and smaller and stranded conductors for No. 6 AWG and larger unless otherwise indicated.
   1. The bonding conductors between the TGB and structural steel of steel-frame buildings shall not be smaller than No. 6 AWG.
   2. The bonding conductors between the TMGB and structural steel of steel-frame buildings shall not be smaller than No. 6 AWG.

B. Underground Grounding Conductors: Install bare tinned-copper conductor, No. 2 AWG minimum.

C. Conductor Terminations and Connections:
   1. Pipe and Equipment Grounding Conductor Terminations: Bolted connectors.
   2. Underground Connections: Welded connectors except at test wells and as otherwise indicated.
   3. Connections to Ground Rods at Test Wells: Bolted connectors.
   4. Connections to Structural Steel: Welded connectors.

D. Conductor Support:
   1. Secure grounding and bonding conductors at intervals of not less than 36 inches.

E. Grounding and Bonding Conductors:
   1. Install in the straightest and shortest route between the origination and termination point, and no longer than required. The bend radius shall not be smaller than eight times the diameter of the conductor. No one bend may exceed 90 degrees.
   2. Install without splices.
   3. Support at not more than 36-inch intervals.
   4. Install grounding and bonding conductors in 3/4-inch PVC conduit until conduit enters a telecommunications room. The grounding and bonding conductor pathway through a plenum shall be in EMT. Conductors shall not be installed in EMT unless otherwise indicated.
      a. If a grounding and bonding conductor is installed in ferrous metallic conduit, bond the conductor to the conduit using a grounding bushing that complies with requirements in Section 270528 "Pathways for Communications Systems," and bond both ends of the conduit to an SBB.

3.4 GROUNDING ELECTRODE SYSTEM

A. The TBC between the PBB and the ac service equipment ground shall not be smaller than No. 1/0 AWG.

B. Size per TIA-607-C Table 1.

3.5 GROUNDING BUSBARS

A. Indicate locations of grounding busbars on Drawings. Install busbars horizontally, on insulated spacers 2 inches minimum from wall, 12 inches minimum above finished floor unless otherwise indicated.

B. Where indicated on both sides of doorways, route bus up to top of door frame, across top of doorway, and down; connect to horizontal bus.

3.6 CONNECTIONS

A. Bond metallic equipment in a telecommunications equipment room to the grounding busbar in that room, using equipment grounding conductors not smaller than No. 6 AWG.

B. Stacking of conductors under a single bolt is not permitted when connecting to busbars.

C. Assemble the wire connector to the conductor, complying with manufacturer's written instructions and as follows:
   1. Use crimping tool and the die specific to the connector.
   2. Pretwist the conductor.
   3. Apply an antioxidant compound to all bolted and compression connections.

D. Primary Protector: Bond to the PBB with insulated bonding conductor.

E. Interconnections: Interconnect all SBBs with the PBB with the telecommunications backbone conductor. If more than one PBB is installed, interconnect PBBs using the grounding equalizer conductor. The telecommunications backbone conductor and grounding equalizer conductor size shall not be less than 2 kcmils/linear foot of conductor length, up to a maximum size of No. 3/0 AWG 168 kcmils unless otherwise indicated. Size per TIA-607-C Table 1.

F. Telecommunications Enclosures and Equipment Racks: Bond metallic components of enclosures to the telecommunications bonding and grounding system. Install vertically mounted rack grounding busbar unless the enclosure and rack are manufactured with the busbar. Bond the equipment grounding busbar to the SBB No. 2 AWG bonding conductors. Size per TIA-607-C Table 1.

G. Shielded Cable: Bond the shield of shielded cable to the SBB in communications rooms and spaces. Comply with TIA-568.1-D and TIA-568.2-D when grounding screened, balanced, twisted-pair cables.

H. Rack- and Cabinet-Mounted Equipment: Bond powered equipment chassis to the cabinet or rack grounding bar. Power connection shall comply with NFPA 70; the equipment grounding conductor in the power cord of cord- and plug-connected equipment shall be considered as a supplement to bonding requirements in this Section.

I. Access Floors: Bond all metal parts of access floors to the SBB.

J. Equipment Room Signal Reference Grid: Provide a low-impedance path between telecommunications cabinets, equipment racks, and the reference grid, using No. 6 AWG bonding conductors.
   1. Install the conductors in grid pattern on 4-foot centers, allowing bonding of one pedestal from each access floor tile.
   2. Bond the SBB of the equipment room to the reference grid at two or more locations.
   3. Bond all conduits and piping entering the equipment room to the SBB at the perimeter of the room.

K. Towers and Antennas:
   1. Ground Ring: Buried at least 30 inches below grade and at least 24 inches from the base of the tower or mounting.
   2. Bond each tower base and metallic frame of a dish to the ground ring, buried at least 18 inches below grade.

3. Bond the ground ring and antenna grounds to the equipment room PBB or SBB, buried at least 30 inches below grade.
4. Bond metallic fences within 6 feet of towers and antennas to the ground ring, buried at least 18 inches below grade.
5. Special Requirements for Roof-Mounted Towers:
   a. Roof Ring: Meet requirements for the ground ring except the conductors shall comply with requirements in Section 264113 "Lightning Protection for Structures."
   b. Bond tower base footings steel, the SBB in the equipment room, and antenna support guys to the roof ring.
   c. Connect roof ring to the perimeter conductors of the lightning protection system.
6. Waveguides and Coaxial Cable:
   a. Bond cable shields at the point of entry into the building to the SBB and to the cable entrance plate, using No. 2 AWG bonding conductors.
   b. Bond coaxial cable surge arrester to the ground or roof ring using bonding conductor size recommended by surge-arrester manufacturer.

3.7 GROUNDING UNDERGROUND DISTRIBUTION SYSTEM COMPONENTS

A. Duct-Bank Grounding Conductor: Bury 12 inches above duct bank when indicated as part of duct-bank installation.

B. Comply with IEEE C2 grounding requirements.

C. Grounding Manholes and Handholes: Install a driven ground rod through manhole or handhole floor, close to wall, and set rod depth so 4 inches extends above finished floor. If necessary, install ground rod before manhole is placed and provide No. 1/0 AWG bare, tinned-copper conductor from ground rod into manhole through a waterproof sleeve in manhole wall. Protect ground rods passing through concrete floor with a double wrapping of pressure-sensitive insulating tape or heat-shrunk insulating sleeve from 2 inches above to 6 inches below concrete. Seal floor opening with waterproof, non-shrink grout.

D. Grounding Connections to Manhole Components: Bond exposed-metal parts such as inserts, cable racks, pulling irons, ladders, and cable shields within each manhole or handhole, to ground rod or grounding conductor. Make connections with No. 4 AWG minimum, bonding conductor. Train conductors' level or plumb around corners and fasten to manhole walls. Connect grounding conductors to cable armor and cable shields according to written instructions by manufacturer of splicing and termination kits.

3.8 IDENTIFICATION

A. Labels shall be preprinted or computer-printed type.
   1. Label PBB(s) with "fs-PBB," where "fs" is the telecommunications space identifier for the space containing the PBB.
   2. Label SBB(s) with "fs-SBB," where "fs" is the telecommunications space identifier for the space containing the SBB.
   3. Label the TBC and each telecommunications backbone conductor at its attachment point: "WARNING! TELECOMMUNICATIONS BONDING CONDUCTOR. DO NOT REMOVE OR DISCONNECT!"

3.9 FIELD QUALITY CONTROL

A. Testing Agency: Engage a qualified testing agency to perform tests and inspections.

B. Perform tests and inspections.

C. Tests and Inspections:
   1. Inspect physical and mechanical condition. Verify tightness of accessible, bolted, electrical connections with a calibrated torque wrench according to manufacturer's written instructions.
   2. Test the ground resistance to earth of each ground rod prior to connection to the system. Where test show resistance to ground is over 5 OHMS, report to Owners Project Manager locations and values. Submit test results to the Owners Project Manager.
   3. Test the bonding connections of the system using an ac earth ground-resistance tester, taking two-point bonding measurements in each telecommunications equipment room containing a PBB and a SBB and using the process recommended by BICSI TDMM. Conduct tests with the facility in operation.
      a. Measure the resistance between the busbar and the nearest available grounding electrode. The maximum acceptable value of this bonding resistance is 100 milliohms.
   4. Test for ground loop currents using a digital clamp-on ammeter, with a full-scale of not more than 10 A, displaying current in increments of 0.01 A at an accuracy of plus/minus 2.0 percent.
      a. With the grounding infrastructure completed and the communications system electronics operating, measure the current in every conductor connected to the PBB and in each SBB. Maximum acceptable ac current level is 1 A.

D. Excessive Ground Resistance: If resistance to ground at the TBC exceeds 5 ohms, notify Owners Project Manager promptly and include recommendations to reduce ground resistance.

E. Grounding system will be considered defective if it does not pass tests and inspections. Correct all work that fails testing requirements and re-test system.

F. Prepare test and inspection reports.

PART 4 MEASUREMENT

4.1 METHOD OF MEASUREMENT

A. Percent of work complete shall be the method for measuring progress.

PART 5 PAYMENT

5.1 METHOD OF PAYMENT

A. Percent of work complete based on the approved schedule of values.

END OF SECTION

SECTION 270528 - PATHWAYS FOR COMMUNICATIONS SYSTEMS

PART 1 GENERAL

1.1 SUMMARY

A. Section includes:
   1. Metal conduits and fittings
   2. Nonmetallic conduits and fittings
   3. Optical fiber cable pathways and fittings
   4. Metal wireways and auxiliary gutters
   5. Nonmetallic wireways and auxiliary gutters
   6. Surface mount pathways
   7. Boxes, enclosures and cabinets
   8. Handholes and boxes for exterior underground cabling

B. For the purpose of this Specification, the term “Telecommunication Pathways” defines a portion of communication infrastructure. Telecommunication Pathways include products provided for the routing, segregation and support of telecommunication cabling both inside and outside of facilities.

C. Provide pathways as required for the premise wiring communications system and other Division 27 telecommunications and electronic systems as required for cabling being installed as part of this Project.

D. All penetrations through fire-rated walls, floors or ceilings as shown on the drawings and fire safing of existing penetrations used for the passage of wiring systems and other Division 27 systems using the PWCS for signal carriage shall be the responsibility of the Contractor. Reference Section 078400 - Firestopping for firestopping requirements.

E. For the purposes of the design drawings junction and pull boxes are not shown. The contractor shall be responsible for the installation of boxes as required to satisfy the requirements of NEC and the cable manufacturer’s requirements. All pull boxes above ceilings shall be located in accessible locations and coordinated/located with access panels in ceilings as required.

F. Fiber optic cabling systems: The installation requirements for Fiber Optic cable differs significantly from the installation of copper cables. The Contractor shall install conduit and boxes in locations and sizes as shown on the drawings where shown. Where not specifically shown but required per NEC, all conduits, conduit bends, pull boxes and junction boxes shall be sized in accordance with the fiber optic cable manufacturer’s minimum bend radius requirements for the cable being installed.

1.2 RELATED DOCUMENTS:

A. Drawings and general provisions of the Contract, including General and Special Conditions and Division 01 specification sections, apply to this section.

B. As specified in section 270500 – Basic Telecommunications Requirements.

C. Related Sections: as specified in Section 270500 – Basic Telecommunication Requirements.

D. Alternates: Refer to Division 01 Section 012300 - Alternates for description of work in this section affected by alternates.

E. Refer to Low Voltage Responsibility Matrix provided on cover sheet of drawings for additional procurement and installation responsibilities.

1.3 CODES STANDARDS AND REFERENCES

A. As specified in Section 270500 – Basic Telecommunication Requirements, Section 271000 – Premise Wiring Communications System.

B. References:
   1. American Society for Testing and Materials (ASTM)
      a. ASTM A123 / A123M – 2017: Standard Specification for Zinc (Hot-Dip Galvanized) Coatings on Iron and Steel Products
      b. ASTM B633 – 2019: Standard Specification for Electrodeposited Coatings of Zinc on Iron and Steel
      c. ASTM E814 – 2013a (Reapproved 2017): Standard Test Method for Fire Tests of Penetration Firestop Systems
   2. National Electrical Manufacturers Association (NEMA)
      a. NEMA VE-1: Metal Cable Tray Systems
      b. NEMA VE-2: Cable Tray Installation Guidelines.
   3. Underwriters Laboratories
      a. UL 94: The Standard for Safety of Flammability of Plastic Materials for Parts in Devices and Appliances Testing

1.4 DEFINITIONS

A. ARC: Aluminum Rigid Conduit

B. GRC: Galvanized Rigid Conduit - steel

C. IMC: Intermediate Metal Conduit

D. IDF: Intermediate Distribution Frame

E. MDF: Main Distribution Frame

F. TR: Telecommunications Room

1.5 PROJECT CONDITIONS

A. Horizontal wiring pathways include all types of raceway systems to support voice, data, LAN, CATV and fiber cabling between telecommunications rooms and outlets in the facility.

B. An effective Design of a building's Horizontal Wiring Pathway System should meet the following criteria:
   1. All applicable codes.
   2. Provide flexible cable distribution to workstation locations.
   3. Facilitate ongoing maintenance.
   4. Easily accommodate future changes in equipment and services.
   5. Minimize occupant disruption when horizontal pathways and spaces are accessed.

C. The horizontal distribution system must accommodate all types of communications cabling (i.e., UTP, Coax, and Fiber Optic cabling). When determining the type and size of the cable pathway,

consider the quantity and size of the cables that the pathway is intended to house, and potential for growth in the area served.

D. The locations of telecommunications devices, equipment and raceways are shown diagrammatically on the drawings. Exact locations of items of work shall be field coordinated prior to installation.

E. Provide site inspection to verify areas of work, conditions, products to match existing and conflicts between contract documentation and site conditions. Bring conflicts to Engineer's attention for resolution. Contractor to make notification in a timely fashion so as to not interfere with the schedule of work.

F. Verify quantities required and locations of pull and junction boxes prior to rough in.

1.6 PROJECT COORDINATION

A. As specified in Section 27 05 00 – Basic Telecommunication Requirements.

B. Coordinate the work of this Section with that of other Divisions as required to ensure that the entire work of this project will be carried out in an orderly, complete and coordinated fashion.

1.7 ROUTING OF CONDUITS

A. Conduits installed in support of the telecommunications and Ethernet connected IT systems indicated in Division 27 systems are shown on the drawings in a diagrammatic form. It is the Contractors responsibility to coordinate with other trades and architectural and structural features and conditions and route conduits between end devices and serving Telecommunications Rooms (TR) and other spaces indicated on the drawings and schedules to minimize distances. The maximum allowable cable distance between an Ethernet connected device and the serving port on the Ethernet switch located in the serving TR is 295 feet. Where a conduit routing will exceed 295' the Contractor shall notify the engineer prior to installation. This requirement does not apply to fiber optic cables nor high count category 3 voice grade copper cables

1.8 INTERMEDIATE DISTRIBUTION FACILITIES

A. Intermediate Distribution Facilities shall be provided at locations as required to reach any area of the facility with a 90-meter length of cabling. Reserve fifteen meters of this cabling length for patch cord connections between horizontal cabling terminations in the IDF and tenant LAN equipment in a directly adjacent tenant equipment room space.

B. The IDF will serve as the demarcation point between the Premise Wiring and Communications System backbone cabling system and horizontal cabling system. In addition to cable terminations, these rooms may contain active electronic equipment for Local Area Network services, data circuit conditioning equipment, access control (card reader) equipment, closed circuit television equipment and other equipment that may be required by Owner Telecommunications to support the building.

C. IDF rooms shall not be placed in locations that are subject to the effects of water infiltration, steam infiltration, humidity from nearby water or steam, excessive heat (e.g., direct sunlight) or any other corrosive atmospheric or environmental conditions. Avoid locations that are below grade unless preventive measures against water infiltration are employed. The room must be

free of plumbing and electrical utilities that are not directly required to support the equipment room function. A floor drain is required if there is any risk of water entering the facility.

D. NEC Section 110-16 requires three (3) feet of clear working space around equipment with exposed live parts. This shall apply to all communication equipment in the IDF room.

E. Telecommunications equipment requires heating, ventilating and air conditioning equipment to functions properly at all times. All IDF spaces shall be designed to maintain a temperature range 64 degrees to 75 degrees F at 8 percent to 80 percent relative humidity. Heat Dissipation 750 to 5000 BTUs per cabinet (number of cabinets to be determined through consultation with Owners IT).

F. The floor rating under distributed loading must be greater than 250 Ib/ft.2. The floor loading under equipment racks and other concentrated loads must be greater than 1000 lbs per square foot. Floor finish shall be static resistant vinyl tile.

G. IDF room walls should extend from the finished floor to the structural ceiling (e.g., the slab), be covered with two coats of fire-retardant white or light colored paint, and carry a minimum fire rating of two hours or as required by the applicable codes and regulations. All equipment room walls shall be lined with ¾" fire retardant B/C plywood to a height of 8'-0" above the finished floor. Plywood shall be painted with fire retardant paint to match room finish.

H. A finished ceiling in an IDF room is not recommended as such ceilings impede the installation of raceways and cable pulling. A sealed dust-free concrete finish is acceptable. Where ceilings must be installed, the recommended height of the finished ceiling to the finished floor is a minimum of 8'-6" to allow for cable ladder and cabling above the racks and frames. Any ceiling protrusions (ventilation, sprinklers, etc.) must be placed to assure a minimum clearance height of 8 ft. The ceiling finish must minimize the introduction of dust, and be white to enhance room lighting. Hard, non-accessible ceilings shall not be used in IDF rooms under any circumstance.

I. IDF rooms shall be provided with adequate and uniform lighting that provides a minimum equivalence of 540 lux (50 footcandles) when measured 3 ft. above the finished floor to illuminate wall mounted equipment and the front and rear surfaces of racks and frames. Locate lighting fixtures a minimum of 8 ft. 6 in. above the finished floor. Locate light switches near the entrance(s) to the equipment room. Power for lighting should not come from the same circuits as power for the communications equipment. Provide emergency lighting as required by applicable building codes.

J. Each IDF room shall be provided with a 120/208Volt, 1-Phase load center served with a separate feeder. The size of this load center will vary with the size of the building and the type of demarcation equipment installed. Quadplex power receptacles with separate 20 amp circuit and isolated grounds, shall be mounted in the equipment room. Spacing shall be on six (6) foot centers and receptacles shall be located at 18-inches above the finished floor. Other power requirements (e.g., fluorescent lighting, motors, air conditioning equipment) shall be supplied by a separate feeder, conduit, and branch panel. Provide a UL listed transient voltage surge suppressor directly adjacent to the IDF load center. Connect suppressor to line buses through spare 3-pole circuit breaker. Connect suppressor ground and neutral conductor from suppressor to panel ground and neutral buses. Keep all leads short and as straight as possible. Nipple between suppressor and panel shall not exceed 3-inches. Provide 12" x 2" x 1/4" isolated ground bar directly below panel. Extend #6AWG bare conductor from ground bus on load center to

ground bar. Extend #2AWG bare copper from ground bar to building electrical service ground. See Division 26 sections for UPS and emergency power requirements.

K. All IDF spaces shall be provided with smoke detector(s) or heat detector(s) as required and interconnected with the building fire alarm system. Fire alarm components shall conform to applicable City standards and local codes.

L. All IDF spaces equipped with access control system card reader inside and/or outside the IDF door. Equip door with door position switch, electric hinge and solenoid operated lockset which remains operable from inside the room at all times.

M. A contiguous 12-inch wide cable ladder shall be provided around the full perimeter of all walls of the IDF room at a height of 96-inches measured from the bottom of the cable runway to the finished floor. Wall brackets used to support cable ladder shall be of sufficient length to allow the passage of a 4-inch EMT conduit between the cable ladder and finished wall. Provide bonding strap at all connections between sections of cable ladder. Provide one #6AWG bare copper bond from cable ladder system to IDF ground bar. Two-inch and larger conduits entering the room from above shall be terminated at a height of 24-inches above the cable ladder system. Smaller conduits shall terminate at a height of 12-inches above the cable ladder system. All conduits shall terminate with a bonding bushing which is in turn bonded individually or in groups to the cable ladder.

N. Conduits entering the IDF from below shall be racked on a unistrut frame and terminated at approximately 8-inches above the floor with a bonding bushing. These bushings shall be bonded either individually or collectively to the IDF grounding bar with a #6 AWG bare copper conductor. Provide a 6-inch concrete housekeeping curb around each conduit grouping as shown on the details that accompany this section.

O. IDF Room Configuration and Sizes:
   1. Reference drawings for IDF Room Configuration plans.

1.9 CONTRACTOR QUALIFICATIONS

A. As specified in Section 270500 – Basic Telecommunication Requirements and Division 26 for Electrical.

1.10 QUALITY ASSURANCE

A. Standards of workmanship shall meet or exceed accepted telecommunications systems industry installation practices.

B. As specified in Section 270500 – Basic Telecommunication Requirements and Division 26 for Electrical.

1.11 SUBMITTALS

A. As specified in Section 270500 – Basic Telecommunication Requirements for action, informational and closeout submittals.

1.12 WARRANTY

A. Contractor shall provide a warranty for products and work provided under this Section as specified in Section 270500 – Basic Telecommunications Requirements.

1.13 CONSTRUCTION WASTE MANAGEMENT

A. Construction waste shall be managed in accordance with provisions of Section 017419 "Construction Waste Management and Disposal". Documentation shall be submitted to satisfy the requirements of that Section.

PART 2 PRODUCTS

2.1 CABLE TRAYS

A. Cable Trays: cable tray installations shall be used for extension of backbone plant and station cabling between TRs and other points of demarcation as shown on the drawings.
   1. Cable tray size 12” W with a 4” loading depth unless otherwise noted on the drawings.
   2. Basket style tray is acceptable.
   3. Grounding connections shall be in accordance with the latest edition of NEC and Section 27 05 26 – Grounding and Bonding for Communication Systems.
   4. Provide supports, couplings, elbows, tees, dropouts and other fittings as required. Support assemblies shall support at least 200 percent of tray system allowable load.
      a. Internal Bend Radius: 12 inches.
      b. Ground all cable trays.
      c. Comply with the requirements of NEMA VE-1, 2 and ASTM A123.
      d. Manufacturers: M.P. Husky, T.J. Cope and B-Line Systems
      e. Cable Tray Materials: Metal, suitable for indoors, and protected against corrosion by electroplated zinc galvanizing, complying with ASTM B 633, Type 1, not less than 0.000472 inch thick.

2.2 METAL CONDUIT SYSTEMS

A. Conduit pathways shall be provided as complete conduit systems including:
   1. Conduit with bushings and pull strings.
   2. Pull box / Junction box assemblies.
   3. Mounting / attachment hardware.
   4. Labeling.
   5. Grounding.

B. General Requirements for Metal Conduits and Fittings:
   1. Listed and labeled as defined in NFPA 70, by a qualified testing agency, and marked for intended location and application.
   2. Comply with TIA-569-B.
   3. 4-inch electrical metallic tubing or rigid metallic conduit may be used at above grade locations between MDF and IDF rooms or between IDF rooms. All conduits shall terminate with bonding bushings at the IDF or MDF rooms which are bonded to the cable ladder system in the room.
   4. Conduits entering the IDF from below shall be racked on a unistrut frame and terminated at approximately 8-inches above the floor with a bonding bushing. These bushings shall be bonded either individually or collectively to the IDF grounding bar with a #6 AWG bare copper conductor. Provide a 6-inch concrete housekeeping curb around each conduit grouping.

C. GRC: Comply with ANSI C80.1 and UL 6.

D. ARC: Comply with ANSI C80.5 and UL 6A.

E. IMC: Comply with ANSI C80.6 and UL 1242.

F. PVC-Coated Steel Conduit: PVC-coated rigid steel conduit.
   1. Comply with NEMA RN 1.
   2. Coating Thickness: 0.040 inch, minimum.

G. EMT: Comply with ANSI C80.3 and UL 797.

H. Fittings for Metal Conduit: Comply with NEMA FB 1 and UL 514B.
   1. Conduit Fittings for Hazardous (Classified) Locations: Comply with UL 886 and NFPA 70.
   2. Fittings for EMT:
      a. Material: Steel.
      b. Type: Setscrew or compression.
   3. Expansion Fittings: PVC or steel to match conduit type, complying with UL-467, rated for environmental conditions where installed, and including flexible external bonding jumper.
   4. Coating for Fittings for PVC-Coated Conduit: Minimum thickness of 0.040 inch, with overlapping sleeves protecting threaded joints.

I. Joint Compound for IMC, GRC, or ARC: Approved, as defined in NFPA 70, by authorities having jurisdiction for use in conduit assemblies, and compounded for use to lubricate and protect threaded conduit joints from corrosion and to enhance their conductivity.

J. Vertical (Backbone) Communications Pathways - Conduit:
   1. 4-inch electrical metallic tubing or rigid metallic conduit may be used at above grade locations between MDF and IDF rooms or between IDF rooms. All conduits shall terminate with bonding bushings at the IDF or MDF rooms that are bonded to the cable ladder system in the room.
   2. 4-inch schedule 40 PVC may be used in new construction between communications rooms. Conduit shall transition to PVC coated galvanized rigid steel at all elbows and at terminations at IDF or MDF rooms. Provide 4'-0" minimum radius on all bends. All conduits shall be provided with bonding bushings at equipment room terminations that are" bonded either individually or collectively to the equipment room grounding bar.
   3. Conduits used for vertical cabling shall have no more than 270-degrees in bends. Straight-through pull boxes shall be used in conduit runs which exceed this value. Pull boxes shall be sufficiently large to accommodate the number of 4-inch conduits in the run assuming a single cable of 51% fill in each of the raceways. All pull boxes shall be equipped with hinged covers.
   4. All conduit shall be verified after installation by pulling a mandrel through the conduit that is 80% of the internal diameter of the conduit. After completion of the mandrel test install one 3/4" wide woven aramid fiber pull tape in each conduit. Feed tape straight through pull boxes without breaking or splicing. Pull tape shall provide 2500 pounds of tensile strength and be marked with consecutive footage numbers at one-foot intervals. Permanently tie off tapes at both ends.
   5. Upon completion vertical communications conduit shall be left clean, dry and unobstructed. Cap each conduit to prevent entry of debris. Provide a permanent label on the bonding bushing for each conduit indicating the number of the conduit and destination of the remote end.

K. Conduit fill calculations: calculate and provide conduit systems with sizing and quantities to assure conduit wire/cable fill does not exceed pulling tensions, rush limits, performance properties of cables installed and code requirements.

L. Minimum conduit sizes for horizontal copper station cables (excludes horizontal fiber optic and backbone cabling systems)
   1. Between telecommunications outlet and telecommunications room / cable tray:
      a. 3 Cables – 3/4”
      b. 4 Cables – 1”
      c. 8 Cables – 1-1/4”
      d. 12 Cables – 1-1/2”
   2. Backboxes for Communications Outlets shall be 4” sq. x 2-1/2” D and provided with a single gang device ring for outlets configured with between 1 and 6 ports and a double gang device ring for outlets with a greater than 6 ports.
      a. Coordinate with trade for installation and sizes for communications conduit and outlet boxes that terminate in millwork and other specialized structures.

M. Conduit trade sizes: typical conduit trade sizes used in outside plant telecommunications pathways:
   1. Trade size 4-inch PVC type C or galvanized steel / iron pipe.
   2. Trade size 2-Inch PVC type C or galvanized steel / iron pipe.
   3. Trade Size 1-inch PVC type C or galvanized steel / iron pipe

N. Typical conduit trade sizes used in inside plant telecommunications pathways:
   1. Trade Size 1-inch EMT.
   2. Trade Size 1-½ inch EMT.
   3. Trade Size 2-inch EMT.
   4. Trade Size 3-inch EMT.
   5. Trade Size 4-inch EMT.
   6. Various trade size of flexible (flex) conduit (typically limited to 6-feet in length). Approval required for each instance of use.

O. Underground duct banks, manholes / hand-holes design load rating:
   1. AASHTO H-20 rating for typical roadway / commercial traffic areas.

P. Duct material: typical conduit (duct) trade sizes used in outside plant telecommunication pathways:
   1. Trade Size 4-Inch PVC type C or Galvanized Steel/Iron Pipe

Q. Telecommunication hand-holes and manholes (maintenance holes):
   1. Telecommunications manholes:
      a. Shall not be used by lighting and power cable plant.
      b. Used for telecommunication cable pulling and splicing.
      c. Manhole covers, and frames shall be load rated for expected traffic load.
      d. Standard manhole configurations:
         1) Type A
         2) Type J
         3) Type V
         4) Application specific design as field and cable density/routing conditions require.
      e. Manhole corrosion resistant accessories:

1) Sump
2) Ladder
3) Cable Rack/Ladder
4) Pulling Eyes
5) Grounding hardware

2. Building entrances
   a. Pulling eyes
   b. Splice frame
   c. Grounding / protection hardware
   d. Sealing and capping of conduit and innerducts to prevent migration of, pests, water and vapors into the facility

R. Manufacturers: Subject to compliance with requirements, provide products by one of the following:
1. AFC Cable Systems, Inc.
2. Allied Tube & Conduit; a Tyco International Ltd. Co.
3. Alpha Wire Company
4. Anamet Electrical, Inc.
5. Electri-Flex Company
6. O-Z/Gedney; a brand of EGS Electrical Group
7. Picoma Industries; Subsidiary of Mueller Water Products, Inc.
8. Republic Conduit
9. Robroy Industries
10. Southwire Company
11. Thomas & Betts Corporation
12. Western Tube and Conduit Corporation
13. Wheatland Tube Company; a division of John Maneely Company
14. Or approved equal

2.3 NON-METALLIC CONDUIT SYSTEMS

A. Manufacturers: Subject to compliance with requirements, provide products by one of the following:
1. AFC Cable Systems, Inc.
2. Allied Tube & Conduit; a Tyco International Ltd. Co.
3. Anamet Electrical, Inc.
4. Arnco Corporation.
5. CANTEX Inc.
6. CertainTeed Corp.
7. Condux International, Inc.
8. Electri-Flex Company.
9. Kraloy.
10. Lamson & Sessions; Carlon Electrical Products.
11. Niedax-Kleinhuis USA, Inc.
12. RACO; a Hubbell company.
13. Thomas & Betts Corporation.
14. or approved equal.

B. General Requirements for Nonmetallic Conduits and Fittings:

1. Listed and labeled as defined in NFPA 70, by a qualified testing agency, and marked for intended location and application.
2. Comply with TIA-569-D.
3. 4-inch schedule 40 PVC may be used in new construction between communications rooms. Conduit shall transition to PVC coated galvanized rigid steel at all elbows and at terminations at IDF or MDF rooms. Provide 4'-0" minimum radius on all bends. All conduits shall be provided with bonding bushings at equipment room terminations that are" bonded either individually or collectively to the equipment room grounding bar.

C. RNC: Type EPC-40-PVC, complying with NEMA TC 2 and UL 651 unless otherwise indicated.

D. Rigid HDPE: Comply with UL 651A.

E. Continuous HDPE: Comply with UL 651B.

F. RTRC: Comply with UL 1684A and NEMA TC 14.

G. Fittings for RNC: Comply with NEMA TC 3; match to conduit or tubing type and material.

2.4 METAL WIREWAYS AND AUXILLIARY GUTTERS

A. Manufacturers: Subject to compliance with requirements, provide products by one of the following:
1. Cooper B-Line, Inc.
2. Hoffman; a Pentair company.
3. Mono-Systems, Inc.
4. Square D; a brand of Schneider Electric.
5. or approved equal.

B. Description: Sheet metal, complying with UL 870 and NEMA 250, Type 1, Type 3R, Type 4, or Type 12 unless otherwise indicated, and sized according to NFPA 70.
1. Metal wireways installed outdoors shall be listed and labeled as defined in NFPA 70, by a qualified testing agency, and marked for intended location and application.
2. Comply with TIA-569-B.

C. Fittings and Accessories: Include covers, couplings, offsets, elbows, expansion joints, adapters, hold-down straps, end caps, and other fittings to match and mate with wireways as required for complete system.

D. Wireway Covers: Hinged type, Screw-cover type or Flanged-and-gasketed type as indicated.

E. Finish: Manufacturer's standard enamel finish.

2.5 INNERDUCTS

A. Contractor shall install inside and outside plant innerduct.
1. Inside plant innerduct shall be plenum rated in building conduits 2-inches and larger.
2. Outside plant innerduct shall be installed in UG conduits and duct banks.

B. Inside plant innerduct shall be listed and marked for installation in plenum airspaces. Plenum rated innerduct shall be minimum of 1.00-inch inside diameter.
1. Plenum innerducts shall be constructed of low smoke emission, flame retardant PVC.
2. Innerducts shall be furnished with factory installed nylon pull ropes.
3. Innerducts shall have a UL 94 V-O flame spread rating.

4. Innerduct reel lengths shall be provided as necessary to insure that ducts are continuous; one piece runs from communication room to communication room. No innerduct connectors, inserts or splices will be allowed between rooms.
5. Pulling accessories used for innerduct shall be compatible with materials being pulled.
6. Accessories shall be furnished as required to complete the installation, including but not limited to, inner duct lubricants, spreaders, applicators, grips, swivels, harnesses, and line missiles.
7. Each segment of innerduct shall extend at least twelve inches beyond the end of the service conduit and or cable tray. Innerduct ends shall be neatly restrained with wall mount clamps.

C. Outside Plant Inner Ducts shall be 1.00-inch, 1.25-inch and/or 1.5-inch selected to optimize current and future cable routing through underground conduits. Outside plant innerduct shall include the following features:
   1. Innerducts shall be constructed of high-density polyethylene with internal and external longitudinally ribs.
   2. Innerducts shall be furnished with factory installed nylon pull ropes.
   3. Innerducts shall have a UL 94 V-O rating for flame spread from final manholes to interconnection cabinets within buildings.
      a. Innerduct reel lengths shall be provided as necessary to insure that ducts are continuous; one piece runs from manhole/handhole to manhole/handhole. No innerduct connectors will be allowed between manholes / handholes.
      b. Pulling accessories used for innerduct shall be compatible with materials being pulled. Accessories shall be furnished as required to complete the installation, including but not limited to, inner duct lubricants, spreaders, applicators, grips, swivels, harnesses, and line missiles.
      c. Each segment of innerduct shall extend at least twelve inches beyond the end of the service conduit.
      d. At building entrance locations, innerduct shall be extended into racking infrastructure and securely fastened to prevent pull back into the conduit systems.
      e. In manholes planned for cable pull through, (non-pull point for cable) innerduct shall be properly racked and secure to minimize congestion in the manholes. In manholes where cable pulling is required, innerducts shall be secured to racking to prevent pull back, and sealed to minimize migration or water, vapors and pests.
      f. At each manhole and cable entrance to the facility, the inner ducts shall be labeled to indicate cable (s) supported inside the innerduct.
      g. Design selection: Carlon, Integral or equal.

2.6 FIRESTOPPING

A. Firestopping shall be provided for Telecommunication Pathways at penetration areas for fire rated walls and floors. Firestopping shall meet or exceed the hour rating of wall or floor penetrated by the Telecommunication Pathway.

B. Firestopping shall comply with latest release of NEC NFPA 70

C. Reference Section 078400 - Firestopping for firestopping requirements.

D. Firestopping products and applications shall provide containment of smoke, fumes and flame with performance in accordance with ASTM E814 (UL 1479).

E. Local Authority Having Jurisdiction – building code requirements

F. Types of firestopping hardware and materials include:
   1. Mechanical firestopping products:
      a. Conduit sleeves.
      b. Cable tray penetrations.
      c. Penetration frame products.
   2. Non-mechanical firestopping products:
      a. Putties.
      b. Caulks.
      c. Cementitious / foams / intumescent materials.
      d. Prefabricated Pillows, Blocks and Blankets
   3. Firestopping products shall be installed per manufacturer's practices.
   4. Manufacturers include:
      a. Specified Technologies Inc. (STI) SpecSeal.
      b. 3M Products.
      c. CSD Sealing Systems
   5. Provide a fire stop ID label at each penetration

2.7 GROUNDING

A. Provide products as specified in Section 270526 – Grounding and Bonding for Communication Systems.

2.8 IDENTIFICATION PRODUCTS

A. Comply with requirements in Section 260553 – Identification for Electrical Systems or applicable Division 26 sections.

PART 3 EXECUTION

3.1 INSTALLATION PRACTICES

A. Installations shall meet or exceed industry standards and installation practices listed herein.

B. Maximum cable distance between any outlet and the telecommunications room, closet or cabinet shall not exceed ninety 295 feet (90 meters).

C. Conduit Entry to Telecommunications Rooms: Horizontal distribution conduits entering a telecommunications closet should terminate above the room's cable ladder system to allow for proper cable racking. If conduits are entering through the floor, they must terminate four (4) inches above the finished floor. Conduits must be reamed, equipped with a bonding bushing and terminated as close as possible to the terminating rack or wall. Provide a #6 AWG bare copper bonding connection between the bonding bushing(s) and cable ladder system or equipment room grounding bar.

D. Product installations failing to meet standards and practices shall be removed and replaced at no additional cost to the Owner.

E. The Contractor shall be responsible for any damage to any surfaces or work disrupted as a result of his work. Repair of surfaces including painting shall be included as necessary.

F. Install all equipment in strict accordance with the manufacturer's recommendations and in compliance with the latest issue of the TIA-568-C Telecommunications Standards and Telecommunications Distributions Methods Manual (TDMM) guidelines.

G. The installation shall be in compliance with the requirements of the NEC, OSHA and the rules, regulations and requirements of the FCC.

H. The installation shall comply with federal, city, county and state laws, ordinances, regulations, and codes applicable to the installation.

I. Contractor shall supply all tools and test equipment necessary for successful completion of the Project.

J. If deviations from the drawings are required, they shall require approval by the Engineer prior to placement of the affected work.

K. Electromagnetic Interference (EMI):
   1. EMI causes severe problems with electronic equipment, telecommunications and data communications, avoidance of all potential sources or, electromagnetic interference must be a primary consideration when designing a horizontal distribution system. To avoid electromagnetic interference, all distribution pathways should provide clearances of at least:
      a. Four (4) ft. (1.2 m) from large motors and/or transformers.
      b. One (1) ft. (0.3 m) from conduit and cables used for electrical power distribution.
      c. Five (5) in. (12 cm) from fluorescent lighting.
   2. Note: Horizontal Distribution Pathways should cross perpendicular to fluorescent lighting and electrical power cables or conduits

3.2 BUILDING RACEWAY SYSTEM

A. Provide conduits and raceways as shown on the drawings. Ensure that adequate conduit facilities are installed to support the intended systems. Primary raceways and conduits are shown on the drawings; however, the Contractor shall also be responsible for additional raceways as required to provide a complete conduit system.

B. All telecommunications raceways shall be installed per the latest issue of the TIA-569B Standards and shall comply with the National Electrical Code and all other applicable state and local codes and regulations.

C. All telecommunication raceways shall be grounded and bonded in accordance with the requirements specified in ANSI/NFPA 70, except where other codes or local authorities impose more stringent requirements.

D. Conduit requirements:
   1. The minimum size of conduits used for raceways shall be no less than 1-inch trade size.
   2. Provide pull stings in all conduits for installation of the cables by the Contractor.
   3. No section of conduit shall be longer than 100 feet between pull points and shall contain no more than 180 degrees of total bend.
   4. All conduit bends shall be sweeping and shall not be smaller than the manufacturer's stated minimum bend radius for cable during installation.
   5. The inside bend radius of conduits shall be at least 6 times the internal diameter for conduits under 2-inches and 10 times the internal diameter for conduits 2 inches and larger.

6. Where conduits are installed for the installation of fiber optic cables the minimum bending radius shall be 10 times the ID of the conduit or as specified by the manufacturer for product approved for installation.
7. In no case shall conduit bodies or LB's be used in as a conduit raceway system intended for the installation of Fiber Optic cables. Also refer to 1.1D
8. All conduits shall be terminated with bushings.

E. Pull boxes should be placed in straight sections of conduit and not used in lieu of a bend. Pull boxes shall have a length of at least 8 times the trade-size diameter of the largest conduit.

F. Label all telecommunications conduits at regular intervals and at each side of junction or pull boxes.

3.3 UNDERGROUND RACEWAY SYSTEM

A. Install all outside plant (OSP) raceways and cables as shown on the drawings in compliance with the latest issues of the National Electrical Safety Code, the TIA-758 Telecommunications Standard and BISCI's Customer-Owned Outside Plant Design Manual guidelines.

B. Outside plant raceways shall include installation of HDPE raceway when plowing, trenching, directional boring and saw cutting and patching and installation of OSP-rated inner ducts within the underground communications duct bank as shown on the drawings.

C. Contractor installed HDPE shall be pre-lubricated and have a factory installed pull line.

D. Duct shall have an imbedded copper conductor for use in toneable locates. USE GROUND WIRE FOR DETECTION.

E. Install HDPE raceway and OSP inner duct in accordance with the manufacturer's instructions and industry standards. Contractor to install a #6 AWG ground trace wire and tracer warning tape above the HDPE raceway.

F. Install four (4) 1-inch inner ducts within the 4-inch conduits in the underground communications duct bank as indicated on the drawings.

G. The maximum length of underground raceways between buildings, manholes and hand holes shall not exceed 600 feet.

H. There shall not be more than the equivalent of two 90 degree bends within raceway sections between buildings, manholes and handholes.

I. All underground raceway bends shall be sweeping and shall not be smaller than the manufacturer's stated minimum bend radius for cable during installation.

J. Ducts or inner ducts in which cable is placed shall be sealed to resist liquid and gas infiltration at all manholes and building entrance point locations.

K. Air blown fiber shall be tested per manufacturers requirements and specifications.

3.4 FIRE AND SMOKE PARTITION PENETRATIONS

A. Sealing of openings between floors, through rated fire and smoke walls, existing or created by this Contractor for cable pass through shall be the responsibility of the Contractor.

B. Sealing material and application of this material shall be accomplished in such a manner that is acceptable to the local fire and building authorities having jurisdiction over this work.

C. Openings created by or for this Contractor and left unused shall also be sealed as part of the Contractor's work.

D. Additional penetrations through rated assemblies necessary for passage of wiring shall be made using an approved method and permanently sealed after installation of cables.

PART 4 MEASUREMENT

4.1 METHOD OF MEASUREMENT

A. Percent of work complete shall be the method for measuring progress.

PART 5 PAYMENT

5.1 METHOD OF PAYMENT

A. Percent of work complete based on the approved schedule of values.

END OF SECTION

SECTION 270544 - SLEEVES AND SLEEVE SEALS FOR COMMUNICATIONS PATHWAYS AND CABLING

PART 1 GENERAL

1.1 RELATED DOCUMENTS

A. Drawings and general provisions of the Contract, including General and Supplementary Conditions and Division 01 Specification Sections, apply to this Section.

1.2 SUMMARY

A. Section Includes:
   1. Sleeves for pathway and cable penetration of non-fire-rated construction walls and floors.
   2. Sleeve-seal systems.
   3. Sleeve-seal fittings.
   4. Grout.
   5. Silicone sealants.

1.3 RELATED REQUIREMENTS:

A. Section 078400 - Firestopping for penetration firestopping installed in fire-resistance-rated walls, horizontal assemblies, and smoke barriers, with and without penetrating items.

B. Alternates: Refer to Division 01 Section 012300 - Alternates for description of Work in this Section affected by alternates.

1.4 ACTION SUBMITTALS

A. Product Data: For each type of product.
   1. Include data substantiating that materials comply with requirements.

1.5 CONSTRUCTION WASTE MANAGEMENT

A. Construction waste shall be managed in accordance with provisions of Section 017419 - Construction Waste Management and Disposal. Documentation shall be submitted to satisfy the requirements of that Section.

PART 2 PRODUCTS

2.1 SLEEVES

A. Wall Sleeves:
   1. Steel Pipe Sleeves: ASTM A53/A53M, Type E, Grade B, Schedule 40, zinc coated, plain ends.
   2. Cast-Iron Pipe Sleeves: Cast or fabricated "wall pipe," equivalent to ductile-iron pressure pipe, with plain ends and integral waterstop unless otherwise indicated.

B. Sleeves for Conduits Penetrating Non-Fire-Rated Gypsum Board Assemblies: Galvanized-steel sheet; 0.0239 inch (0.6 mm) minimum thickness; round tube closed with welded longitudinal joint, with tabs for screw-fastening the sleeve to the board.

C. PVC-Pipe Sleeves: ASTM D1785, Schedule 40.

D. Molded-PVC Sleeves: With nailing flange for attaching to wooden forms.

E. Molded-PE or -PP Sleeves: Removable, tapered-cup shaped, and smooth outer surface with nailing flange for attaching to wooden forms.

F. Sleeves for Rectangular Openings:
   1. Material: Galvanized-steel sheet.
   2. Minimum Metal Thickness:
      a. For sleeve cross-section rectangle perimeter less than 50 inches (1270 mm and with no side larger than 16 inches (400 mm), thickness shall be 0.052 inch (1.3 mm).
      b. For sleeve cross-section rectangle perimeter 50 inches (1270 mm) or more and one or more sides larger than 16 inches (400 mm), thickness shall be 0.138 inch (3.5 mm).

G. Sleeves for Vertical (Backbone) Communications Pathways:
   1. Vertical Communications Pathways are facilities used to distribute and support cable between MDF and IDF rooms. These pathways may include conduit, cable tray and sleeves between vertically aligned rooms.
   2. Sleeves -Vertically aligned IDF and MDF rooms shall be linked with a series of 4-inch rigid metallic sleeves. Sleeves shall be attached to the wall above and below the floor slab with length of unistrut and appropriate clamp. Sleeves must not obstruct wall terminating space. All sleeves must be constructed in accordance with the National Electrical Code (NEC) and local fire codes. Sleeves shall be provided with a minimum of a 4 inch high chamfered curb as measured from the finished floor. All sleeves shall be fire safed in accordance with DEN standards.
   3. The following table provides general guidelines for determining the number of 4 in. sleeves required, based on ANSI/TIA-569:

TOTAL SQUARE FEET SERVED	QTY OF SLEEVES
UP TO 50,000	3
50,000 TO 100,000	4
100,000 TO 300,000	5-8
300,000 TO 500,000	9-12

2.2 SLEEVE-SEAL SYSTEMS

A. Description: Modular sealing device, designed for field assembly, to fill annular space between sleeve and pathway or cable.
   1. Manufacturers: Subject to compliance with requirements, provide products by one of the following:
      a. Advance Products & Systems, Inc.
      b. CALPICO, Inc.
      c. Metraflex Company (The).
      d. Pipeline Seal and Insulator, Inc.
      e. Proco Products, Inc.
      f. or approved equal.
   2. Sealing Elements: EPDM rubber interlocking links shaped to fit surface of pipe. Include type and number required for pipe material and size of pipe.
   3. Pressure Plates: Stainless Steel.

4. Connecting Bolts and Nuts: Stainless Steel of length required to secure pressure plates to sealing elements.

2.3 SLEEVE-SEAL FITTINGS

A. Description: Manufactured plastic, sleeve-type, waterstop assembly made for embedding in concrete slab or wall. Unit shall have plastic or rubber waterstop collar with center opening to match piping OD.
   1. Manufacturers: Subject to compliance with requirements, provide products by one of the following:
      a. Presealed Systems.
      b. or approved equal.

2.4 GROUT

A. Description: Non-shrink; recommended for interior and exterior sealing openings in non-fire-rated walls or floors.

B. Standard: ASTM C1107/C1107M, Grade B, post-hardening and volume-adjusting, dry, hydraulic-cement grout.

C. Design Mix: 5000 psi (34.5 MPa), 28-day compressive strength.

D. Packaging: Premixed and factory packaged.

2.5 SILICONE SEALANTS

A. Silicone Sealants: Single-component, silicone-based, neutral-curing elastomeric sealants of grade indicated below.
   1. Grade: Pourable (self-leveling) formulation for openings in floors and other horizontal surfaces that are not fire rated.

B. Silicone Foams: Multicomponent, silicone-based liquid elastomers that, when mixed, expand and cure in place to produce a flexible, non-shrinking foam.

2.6 CABLE TRAY PENETRATIONS THROUGH FIRE RATED PARTITIONS

A. Cable trays requiring penetration through fire rated partitions shall terminate on each side of the rated partition. Furnish and install STI EZ-PATH series re-enterable fire and smoke seal modules through rated partition with an area equal to the capacity of the cable tray. Modules shall be UL classified and/or FM Systems Approved and tested to the requirements of ASTM E814 (UL 1479).

B. Reference Firestopping Specification Sections, Division 07.

PART 3 EXECUTION

3.1 SLEEVE INSTALLATION FOR NON-FIRE-RATED ELECTRICAL PENETRATIONS

A. Comply with NECA 1.

B. Comply with NEMA VE 2 for cable tray and cable penetrations.

C. Sleeves for Conduits Penetrating Above-Grade Non-Fire-Rated Concrete and Masonry-Unit Floors and Walls:
   1. Interior Penetrations of Non-Fire-Rated Walls and Floors:

a. Seal annular space between sleeve and pathway or cable, using joint sealant appropriate for size, depth, and location of joint. Comply with requirements in Section 079200 - Joint Sealants.
b. Seal space outside of sleeves with mortar or grout. Pack sealing material solidly between sleeve and wall so no voids remain. Tool exposed surfaces smooth; protect material while curing.

2. Use pipe sleeves unless penetration arrangement requires rectangular sleeved opening.
3. Size pipe sleeves to provide 1/4 inch (6.4 mm) annular clear space between sleeve and pathway or cable unless sleeve seal is to be installed or unless seismic criteria require a different clearance.
4. Install sleeves for wall penetrations unless core-drilled holes or formed openings are used. Install sleeves during erection of walls. Cut sleeves to length for mounting flush with both surfaces of walls. Deburr after cutting.
5. Install sleeves for floor penetrations. Extend sleeves installed in floors 2 inches (50 mm) above finished floor level. Install sleeves during erection of floors.

D. Sleeves for Conduits Penetrating Non-Fire-Rated Gypsum Board Assemblies:
1. Use circular metal sleeves unless penetration arrangement requires rectangular sleeved opening.
2. Seal space outside of sleeves with approved joint compound for gypsum board assemblies.
3. 4" Conduits shall be secured to both sides of the wall with unistrut and 4-inch unistrut clamps.

E. Roof-Penetration Sleeves: Seal penetration of individual pathways and cables with flexible boot-type flashing units applied in coordination with roofing work.

F. Aboveground, Exterior-Wall Penetrations: Seal penetrations using steel pipe sleeves and mechanical sleeve seals. Select sleeve size to allow for 1 inch (25 mm) annular clear space between pipe and sleeve for installing mechanical sleeve seals.

G. Underground, Exterior-Wall and Floor Penetrations: Install cast-iron pipe sleeves. Size sleeves to allow for 1-inch (25-mm) annular clear space between pathway or cable and sleeve for installing sleeve-seal system.

3.2 SLEEVE-SEAL-SYSTEM INSTALLATION

A. Install sleeve-seal systems in sleeves in exterior concrete walls and slabs-on-grade at pathway entries into building.

B. Install type and number of sealing elements recommended by manufacturer for pathway or cable material and size. Position pathway or cable in center of sleeve. Assemble mechanical sleeve seals and install in annular space between pathway or cable and sleeve. Tighten bolts against pressure plates that cause sealing elements to expand and make watertight seal.

3.3 SLEEVE-SEAL-FITTING INSTALLATION

A. Install sleeve-seal fittings in new walls and slabs as they are constructed.

B. Assemble fitting components of length to be flush with both surfaces of concrete slabs and walls. Position waterstop flange to be centered in concrete slab or wall.

C. Secure nailing flanges to concrete forms.

D. Using grout, seal the space around outside of sleeve-seal fittings.

PART 4 MEASUREMENT

4.1 METHOD OF MEASUREMENT

A. Percent of work complete shall be the method for measuring progress.

PART 5 PAYMENT

5.1 METHOD OF PAYMENT

A. Percent of work complete based on the approved schedule of values.

END OF SECTION

SECTION 271000 - STRUCTURED CABLE SYSTEMS

PART 1 GENERAL

1.1 SUMMARY

A. It is the intent of this specification to specify a single Structured Cabling System for the Owners Project. The SCS will support the connectivity requirements for multiple mission critical operational IT, electronic, security, network and infrastructure systems that are currently deployed and operational.

B. The Contractor shall provide, install, test and commission a SCS Including:
   1. All copper, fiber optic and coaxial horizontal and backbone communications wiring
   2. All cable trays, cable tray dividers, conduits, boxes and supporting hardware required to install the specified SCS.
   3. All communications outlets including faceplates, copper and fiber optic connectors, extension rings, labeling and accessories.
   4. All termination hardware in Communications Rooms CR) (Intermediate Distribution Frame (IDF), Telecommunications Rooms (TR), Main Distribution Frame (MDF) and other spaces designated as points of termination) including RJ45 Patch Panels, Fiber Optic Patch Panels, copper 110 IDC and modular patching and termination systems. Cable management vertical and horizontal organizational hardware systems.
   5. Interior and exterior floor standing and wall mounted equipment cabinets and enclosures, relay racks and accessories including plug strips, grounding hardware, fans, locks and other specified hardware and accessories.
   6. Cable ladders, spillways at each equipment rack and cabinet and accessories.
   7. Provide build out of communications room spaces and other spaces designated for the placement cabling systems and or equipment including plywood backboards, grounding and wire management etc.
   8. Provide and install all voice cross connects and data patch cords in support of the system configuration.
   9. Testing and labeling of all copper and fiber optic cables.
   10. Labeling of all equipment racks frames and enclosures.
   11. The development of as-built drawings and cable records for input to the Owners BIM Model and cable management systems.
   12. The development of and Excel Spreadsheet that contains the all communications outlet and horizontal communications and backbone termination designations and as-installed patching and termination configuration of all configured communications outlets / ports including telephone number information, LAN ID, VLAN ID and host resource information (Switch / Comm Room).

C. Communications Pathways - Outlets: Communications outlets indicated on the drawings are to be extended to the designated Communications room via conduit, cable tray and j-hooks or a combination of either methods extended directly from the outlet to the designated communications room. In determining the method for extension of the outlet to its designated communications room, distance shall be the determining factor. The contractor shall utilize the method that can be installed with the least distance. Where a conduit pathway is calculated to be shorter than a combination of conduit and cable tray, cable distance between the outlet and the serving communications room termination shall not exceed 295 feet.

1.2 RELATED WORK:

A. Electrical Power as specified in Division 26.

B. Conduit Systems as specified in Division 26 and 27 05 28 and compliant to NEC code.

1.3 RELATED DOCUMENTS:

A. Drawings, General and Supplementary Conditions, and all applicable provisions of Division 1 Sections apply to this Section.

1.4 REFERENCES

A. REFERENCE STANDARDS: Comply with the requirements of the reference standards noted herein, except where more stringent requirements are listed herein or otherwise required by the Contract Documents.
   1. Telecommunications Industry Association (TIA)
      a. Reference Section 270500 for specific TIA standards
   2. City Building Codes
   3. City Design Standards
   4. National Fire Protection Association (NFPA)
   5. American National Standards Institute (ANSI)
   6. Underwriters Laboratories (UL)

1.5 PROJECT CONDITIONS

A. The locations of telecommunications devices, equipment and raceways are shown diagrammatically on the drawings. Exact locations of items of work shall be field coordinated prior to installation.

B. Provide site inspection to verify areas of work and existing facilities to develop a comprehensive understanding of the SCS infrastructure to be installed and required for the Project.
   1. It is the Contractor's responsibility to define requirements for temporary infrastructure feeds and interfaces necessary to maintain systems operations during the Project as it is part of the Contractor's means and methods.

C. All cable products installed permanently as part of the Project shall match existing cabling and as specified and shown on the drawings.

D. Conflicts between contract documentation and site conditions shall be brought to the Engineer's attention for resolution. Contractor shall not proceed with work on that part of the Project until the conflict has been resolved.

E. Relocation of existing fiber optic and copper cabling systems that run through the Project boundaries may be required as part of the Project to avoid conflicts with new and existing systems. The Contractor is advised to familiarize themselves with the existing conditions as they pertain to conduit and cabling systems associated with legacy communications and specialty electronic systems. The Contractor shall be required to:
   1. Remove abandoned cabling systems and conduits as required by the NEC as encountered.
   2. Coordinate with the Owners Project Manager for the relocation of active cabling systems and associated conduits to:
      a. Avoid conflicts with other trades

b. Minimize outages to communications and electronic systems resulting from the relocation of cabling and wiring systems. All outages shall be scheduled with the Owners Project Manager and the Engineer and incorporated into the overall project schedule. Contractor to submit a formal Disruption Notice to the Owners Project Manager and Engineer prior to demolition of any systems cabling and equipment. Any system outages necessary as part of this scope of work shall be coordinated with the Owners Project Manager and Engineer.
c. Unscheduled systems outages will be not be acceptable.

F. Verify locations of pull and junction boxes prior to rough in.

1.6 PROJECT COORDINATION

A. Coordinate the work of this section with that of other Divisions as required to ensure that the entire work of this project will be carried out in an orderly, complete and coordinated fashion.

B. The Contractor is required to supply all necessary supervision and coordination of information to any subcontractor who is performing work to accommodate the work of this Section and minimize interferences.

C. Prior to installation of any work Contractor shall have a coordination meeting with subcontractors to completely establish routings, elevations, space requirements and coordination of the work with all other trades.

D. Coordinate exact mounting locations of equipment racks and cabinets within the communications rooms with the City IT prior to installation.

E. Any system outages necessary as part of this scope of work shall be coordinated with Owners Project Manager and the Engineer. System shutdown shall be submitted to and approved by Owners Project Manager and Engineer at least two weeks prior to the shutdown.

F. Any work penetrating concrete walls or floors shall require saw cutting and/or core drilling and shall require approval by the Engineer. X-ray is required in advance of any penetration deeper than 1-inch in existing concrete structural elements.

1.7 CONTRACTOR QUALIFICATIONS

A. The SCS Contractor shall be experienced in all aspects of this work and shall be required to demonstrate direct experience on recent systems of similar type and size. The Contractor shall own and maintain tools and equipment necessary for successful installation and testing of optical and metallic premise distribution systems and have personnel who are adequately trained in the use of such tools and equipment.

B. A resume of qualification shall be submitted with the Contractor's bid. In addition to those requirements, the Contractor shall submit the following information.
1. A list of (3) three completed SCS projects over the past 5 years of similar type and size with contact names and telephone numbers for each.
2. A list of test equipment proposed for use in verifying the installed integrity of fiber and metallic cable systems on this project.
3. A technical resume of experience for the Contractor's Engineer and on-site installation foreman who will be assigned to this project.
4. Similar documentation for any subcontractor who will assist the SCS Contractor in performance of this work.

5. Reference Section 27 05 00 – Basic Telecommunication Requirements for additional Contractor qualification requirements.

1.8 QUALITY ASSURANCE

A. Standards of workmanship shall meet or exceed accepted telecommunications systems industry installation practices.

B. Refer to specifications 270500 – Basic Telecommunication Requirements, for quality assurance requirements.

1.9 SUBMITTALS

A. Comply with the requirements of Section 013300 – Submittal Requirementss and with Section 270500 – Basic Telecommunications Requirements. In addition to the requirements found in the Sections cited, provide the following:
   1. Submittal quantities: The Contractor shall submit 1 electronic copy of all required SCS submittals
   2. Product Data Submittals: indicate the UL listing and NEC insulation type for each type of cable installed as part of the SCS.
   3. Shop Drawings: prepare and submit coordination drawings detailing raceways and system components and materials in relationship with other building systems and components.
   4. Running As-Built documents: The Contractor shall maintain real-time running as-built documentation for the as installed SCS. Electronic as-Built information shall be submitted monthly to Owners Project Manager and the Engineer for review.
   5. Detail Drawings: submit detailed drawings for:
      a. Wall-mounted facilities on terminal backboards.
      b. Equipment rack and cabinet elevations for all termination locations.
      c. Manhole and hand hole diagrams indicating conduit and inner duct assignments and usage for existing cables and new fiber optic cable.
      d. Detail drawings shall include clearances for servicing equipment, including space for equipment disassembly required for periodic maintenance.
   6. Cable and equipment labeling schemes and sample labels as coordinated with Owners Project Manager, Owners IT and Engineer.

B. Contractor shall submit Contractor qualifications.
   1. Manufacturers certifications for Category 6 cable installation technicians
   2. Manufacturers certifications for fiber optic cable installation technicians

C. Review of product data shall not relieve the Contractor from responsibility for deviations from the drawings or specifications, unless the Contractor has, in writing, called attention to such deviations at the time of submission and secured written approval.

D. Product Data Manuals: upon completion of the project, submit final Product Data Manuals that include:
   1. A complete as-installed equipment list of all components installed with manufacturers' names and model numbers.
   2. A complete set of product data sheets for all products installed. Product data sheets shall be clearly marked, identifying the specific items installed.
   3. Updated and completed circuit schedule spreadsheets to reflect all voice and data horizontal wiring (station wiring), backbone cable and pairs used on each backbone to support each

circuit, including circuit ID and user. This submittal shall be provided in both hard copy and in electronic format.

4. Submit Product Data Manuals with electronic copies of circuit schedule spreadsheets in MS Excel format.

E. Record Drawings
   1. As-Built documents are to include updating and revising contract documents to record actual locations (as-installed) of all equipment, pull boxes, devices, raceways, cabling, outlets, communications rooms and all Premise Distribution cable infrastructure components.
   2. Contractor shall coordinate As-Built documents for this Section.
   3. As-Built drawings shall include:
      a. Complete floor plans and site plans, indicating placement and routing of as-installed raceways, communications outlet locations and types with labels and cabling facilities installed under this scope of work.
      b. A complete SCS System riser diagram, showing as-installed originations, destinations, and type of pathways for all cabling. Include wire numbers, terminal block numbers and layouts, and other designations.
      c. Equipment rack/cabinet and wallboard as-installed elevation drawings shall be provided for each communication room and termination location.
      d. Manhole and hand-hole diagrams indicating as-installed conduit and innerduct assignments where new raceway interfaces to the manholes installed as part of the Project.
      e. Wiring terminal point-to-point color-coded wiring diagrams. Drawings shall show each item of equipment, locations, all wiring, and all connections.

F. Test Reports: The Contractor as coordinated with and in conjunction with the Project Manager shall be responsible for recording all test data. Copies of all test results are to be submitted to the Engineer for review as part of final acceptance and subsequently submitted to the Owner for their records.
   1. Submit final test reports and communication circuit schedules electronic copies confirming that the cabling infrastructure has been tested, labeled and documented.
   2. Submit test reports in electronic format to assist the Engineer in the final review process. Electronic copies of the test reports shall be either in a file format that can be imported or viewed using standard office software or in a file format used by the testing software, provided the testing software program is also submitted with the raw testing files.
   3. Refer to the testing section of the Specifications for details on the data that shall be included in the test reports.
   4. Submit electronic copies of the test reports with the testing software program on CD-ROM.

G. The Contractor shall provide an as-built list of the initial patch cable connections that with the Schedule of Outlets will enable the Engineer to trace the circuit continuity of each voice and data outlet to its point of demarcation.

1.10 WARRANTY

A. Contractor shall provide a warranty for products and work provided under this Section as specified in Section 27 05 00 – Basic Telecommunications Requirements.

1.11 CABLE MANAGEMANT SYSTEM DOCUMENTATION

A. It is the intent of this requirement to have the Contractor document the end-to-end assignments for all circuits and outlets assigned as part Project.

B. The Contractor in conjunction with the Owners Project Manager and coordinated with Owners IT shall document end-to-end circuit assignments in MS Excel (Latest Version) for all engineered circuits and outlet assignments for all circuits configured and assigned for transport over the SCS.

C. The Contractor shall coordinate labeling and identification schemes with the Owner IT, Owners Project Manager and Engineer for use in documenting the applicable information for each configured outlet and circuit including:
   1. Network Connected Equipment: Outlet # > Outlet Jack # > Systems ID # > Equipment ID # > Telecommunications Room (TR) Number > Patch Panel # > Patch Panel Port # > Ethernet Switch Designation # > Ethernet Port # > VLAN ID > LAN Address > Host System ID
   2. Other: Circuit ID # > Outlet # > Outlet Jack # > Systems ID # > Equipment ID # > Telecommunications Room (TR) Number > Originating Punch Down Field ID # > Originating Pair Position # > Backbone Cable ID # > Destination Punch Down Field ID # > Destination Pair Position ID # > cross connect assignment # > Circuit Origination Point > Host System ID# >

D. The Contractor shall coordinate with Owner IT and Owners Project Manager for data field lengths and final end to end documentation required in addition to that identified in 1.9 C 1, 2 above

1.12 QUALITY ASSURANCE

A. Quality Standards: All work shall meet or exceed communication industry standards and practices defined in applicable sections of the latest version of the Building Industry Consultant Services Industry (BICSI) Telecommunications Distribution Methods Manual (TDMM). All products shall be installed in conformance with the manufacturers recommended procedures.

B. Qualifications: The Contractor shall be experienced in all aspects of installation and testing of the work defined herein. Upon request the Contractor shall provide evidence to the Owner, of direct experience of successful completion of similar work scopes, including referenced contact names and phone numbers. The Contractor shall own and maintain all equipment and tools required to complete the work defined herein and have operated as an installer in the communication industry for no less than 3 years. The Contractor's installation staff shall have been trained by manufacturers or accredited trade organizations such as BICSI, in proper practices for communication system installation and certification. All test results shall certify as accurate and acceptable and sealed by a Registered Communication Distribution Designer (RCDD), with current certification status.

C. Regulatory Requirements: Comply with all applicable building code requirements concerning fire resistance ratings of materials. Where fire-rated walls or floors are penetrated by pathways conduit or cable plant, the opening shall be sealed with approved products bearing UL labels and meet or exceed the existing fire rating.

D. Field Measurements:
   1. Before proceeding with installation of communication, outlets, pathways, or cabling, obtain measurements and verify dimensions and shop drawing details as required for accurate fit.
   2. Where sequence of measuring substrates before installation would delay the Work, proceed with installation without field measurements and adjustments as required for accurate fit.

3. Additional compensation will not be allowed for replacement or modification of work resulting from failure to verify field dimensions.

1.13 DELIVERY, STORAGE, AND HANDLING

A. Packing and Shipping: Provide protective wrappings or coverings for products during shipping, storage, and handling. Allow sufficient ventilation of protective coverings to prevent condensation or excessive build-up of moisture.

B. Acceptance at the Site: Do not deliver products to the site until the building and storage areas are sufficiently dry and the temperature is stabilized so it will not be damaged by excessive changes in ambient temperature, humidity, or relative moisture content. Provide and maintain manufacturer's protective coverings for all products during shipping and storage.

C. Storage and Protection: Store and protect all materials in a manner to prevent damage or deterioration, and as recommended by suppliers.

PART 2 PRODUCTS

2.1 GENERAL

A. All equipment shall be new and unused.

B. All equipment, materials, accessories, devices, and other facilities covered by this Specification or noted on the contract drawings shall be the best suited for the intended use and shall be provided by a single manufacturer.

C. Provide all components, equipment, parts, accessories and associated quantities required for complete installations and according to the manufacturer's installation specifications. All components may not be specified herein.

D. SCS Equipment Specified Elsewhere
   1. Section 27 05 26 – Grounding and Bonding for Communication Systems: Communications grounding equipment.
   2. Section 27 05 28 – Pathways for Communications Systems: Communication pathways and cable trays.
   3. Section 27 11 00 – Communications Equipment Room Fittings: Cable ladder racks; communications room accessories.
   4. Section 27 11 16 – Communications Cabinets, Racks, Frames, Enclosures, and Manufactured Metal Casework: Equipment enclosures and relay racks and accessories.
   5. Section 27 13 00 – Communications Backbone Cabling: Fiber optic; copper backbone cables; fiber optic connectors; fiber optic and copper backbone termination equipment; fiber optic and copper patch cords.
   6. Section 27 15 00 – Communications Horizontal Cabling: Fiber optic and copper horizontal cables; fiber optic and copper patch panels; copper station outlets; copper termination facilities.

2.2 MULTI PAIR VOICE COPPER CABLE: CATEGORY 3, 5, 6

A. Pair voice grade cables
   1. Jacketing: CMR rated with UL label
   2. DC Resistance, 29Ohm/Km Max

3. NVP, .710
4. Shielding: 8mm Corrugated
5. NEXT @ 16MHz. 23dB Min.

B. Design Selection
1. Comm Scope ARMM Series or Approved equal

2.3 GROUND WIRE:

A. #6 AWG Solid Copper
1. Jacketing: Plenum rated with UL label

2.4 RACK MOUNTED UPS UNITS

A. UPS Units shown on the T series drawings are provided as specified on those drawings sheets sections where applicable.

PART 3 EXECUTION

3.1 EXAMINATION

A. Verification of Conditions: Examine areas and conditions under which the work of this Section will be performed. Do not proceed with the work until unsatisfactory conditions have been corrected. Commencement of work implies acceptance of all areas and conditions.

B. Inspection at Delivery: Inspect and test as required all products prior to installation for scratches, marks, or other damage. Work and installed products which do not meet manufacturer's warranty for performance and esthetic conditions will be rejected.

3.2 WORKMANSHIP

A. Components of the premise distribution system shall be installed in a neat, workmanlike manner consistent with the best telephone and data practices.

B. Wiring color codes shall be strictly observed and terminations shall be uniform throughout the building.

C. Identification markings and systems shall be uniform.

D. Universal Service Ordering Code (USOC) wiring codes as shown on the drawings shall standardize all voice wiring.

3.3 FIRE AND SMOKE PARTITION PENETRATIONS

A. Conduit sleeves are to be provided as a means of routing cables between various Communications Rooms and into the cable tray in the ceiling space. Openings in sleeves and conduits used for the SCS system cables and those which remain (empty) spare shall be sealed with an approved fireproof, removable safeing material by the SCS Contractor.

B. Additional penetrations through rated assemblies necessary for passage of SCS wiring shall be made using an approved method and permanently sealed after installation of cables.

3.4 SUPPORT OF VERTICAL RISER CABLES

A. Vertical riser cables shall be properly secured to prevent slippage due to gravity.

B. As a minimum requirement, communications cables shall be supported at their uppermost point and at each two floors of vertical travel.

3.5 LABELING

A. Contractor shall supply and attach permanent labels to both ends of all cables and conductors.

B. Contractor shall supply and attach permanent labels to cables, wiring, and equipment.
   1. All cables shall be labeled.
      a. Both ends of all cables and conductors.
   2. All outlets shall be labeled.
   3. All termination blocks and patch panels shall be labeled.
   4. All terminations shall be labeled.
   5. All equipment frames and cabinets shall be labeled.
   6. Each system shall be labeled.
   7. Grounding system shall be labeled.
   8. Other items as directed by Project Engineer shall be labeled.

C. Identification information shall be typed or printed on labels.
   1. Identification information on labels shall be indelible.
   2. Handwritten labels will not be accepted.
   3. Labels for equipment, racks, backboards, patch panels, enclosures of all types, and other equipment shall be by engraved label.
      a. Labels on same type of equipment shall be attached in same place on each piece of equipment.
   4. Identify empty outlet boxes, junction boxes, and cabinets installed for future use by means of indelible markings on the inside of the box or cabinet noting system use.
   5. Enclosures and junction boxes located above unfinished spaces, such as lay-in ceilings, shall be clearly identified on the outside as “COMM.”
   6. Cable label format: Unless directed otherwise by Owner IT or the Owners Project manager, cables shall have a two line label attached using the following format:
      a. Line 1: ABCDxxxx-yyy-zzz
         1) A = “F” for fiber optic cable, “U” for unshielded twisted pair cable (UTP), or “S” for shielded twisted pair cable.
         2) B = “S” for single mode, “M” for multimode, “6" for Category 6, “6A" for Category 6A, etc.
         3) C = “V” for voice, or “D” for data.
         4) D = Floor, i.e. “B” for basement, “1" for first floor etc.
         5) xxxx = unique numerical identifier in cable management system.
         6) yyy-zzz = Conductor numbers in cable.
      b. Line two: Building/room identifier where cable is located and building/room identifier end point of opposite end of cable.
         1) Contractor shall contact Project Engineer for correct nomenclature for building and room.
      c. Labeling for user outlets shall be as directed by Project Engineer as conditions may vary according to project.
      d. All Labeling and identities shall be coordinated and cross-checked with the Cable Documentation programming defined in Section 16166.

3.6 TESTING

A. All test equipment shall be calibrated and the calibration shall be NIST traceable.

B. Acceptable test equipment manufacturers are as listed below:
   1. Fluke
   2. HP
   3. Tektronics
   4. Siecore

C. Contractor shall clean, test and document all connectors and UTP and optical pathways. Connectors shall be tested as they are installed to isolate and correct problems before a large percentage of connectors are installed. Do not proceed with testing when multiple failures have occurred without prior approval of the Owners Project Manager.

D. The following components shall be tested:
   1. Fiber optic testing using Power Meter/Light Source:
      a. Multimode fiber: 50um, 62.5/125 micron at 850 and 1300 nanometers.
      b. Single mode fiber: 8.3/125 micron at 1310 and 1550 nanometers.
      c. Connectors: Multimode and single mode.
      d. Couplers: Multimode and single mode matching connectors.
      e. Couplers: Multimode and single mode matching connectors.
   2. UTP:
      a. 24 AWG, UTP.
      b. Connectors: eight-pin modular jack configured per TIA T568B.
      c. Punchdown blocks.
      d. Splices: no splices will be permitted in UTP cable.

E. Test Procedures:
   1. General: Cables and components that fail performance tests shall be replaced and retested until they meet the required performance standards.
      a. Create “Cable Test Forms” and submit sample at least 14 days prior to need date for approval by Project Engineer.
      b. Annotate test equipment parameter settings on "Cable Test Form."
      c. UTP testing shall be completed in compliance with TIA 568B and TSB-67 requirements
      d. Optical test equipment shall be properly adjusted prior to use.
      e. Variable unit adjustments shall be calibrated to match cable manufacturer's stated cable transmission parameters.
      f. Cable test results shall be generated by the network cable test instrument and submitted in PDF format.
   2. Fiber optic cable:
      a. Record cable length of each strand tested, from either length markings on cable or through OTDR test.
      b. After installing connectors perform Power Meter/Light source testing to evaluate connector loss and validate connector.
      c. Connector loss shall not exceed manufacturer's listed maximum loss for connector type installed.
      d. Connector shall be replaced at Contractors expense if it fails test.

e. Perform optical attenuation measurements for each optical fiber after both ends of an optical cable have been connectorized, dressed, and mounted into outlets, panels, or frames to show losses of the optical cable, connectors, and couplers.
f. Optical attenuation measurements shall be made from both ends of each fiber of each circuit.
g. Optical attenuation for each circuit shall not exceed the predicted total attenuation (PTA). PTA for each circuit shall be calculated using the following formula:
    1) PTA = (CoQ x CoA) + (CaL x CaA) where:
        a) CoQ = Connector Quantity
        b) CoA = Connector Attenuation (in dB)
        c) CaL = Cable Length (in kilometers)
        d) CaA = Cable Attenuation (in dB per kilometer)
h. Contractor shall calculate PTA for each circuit and enter predicted value and measured value on test form.
i. Tests shall be made with an optical source and receiving power meter at the designated window wavelength.
j. Record results on the appropriate test forms.
k. Passing criteria for the optical attenuation shall be based upon the cable and component manufacturer's specifications
l. All test failures must be documented in the "miscellaneous notes" section of the test form prior to correcting the failure.
m. Failing connectors shall be replaced and fully retested until they pass.

3. UTP testing: The following UTP tests and activities are required in conjunction with the UTP cable terminating process.
    a. After installing the 8 position modular UTP connectors with the pairs configured per TIA T568B.
        1) Mount the 8 position modular UTP connectors into their assigned outlet locations on the user end.
        2) Then punch down the other ends onto 110 blocks in the equipment room.
        3) Record the cable pair punch-down information on the test form noting both termination points
    b. The UTP tests are intended to be pass or fail.
        1) Record the test pass or fail on the appropriate UTP cable test form.
        2) Passing criteria is based upon the cable manufacturer's specifications
        3) All test failures must be documented in the “miscellaneous notes” section of the test form prior to correcting the failure.
4. Failing cables and/or connectors must be replaced and fully retested until they pass.
    a. After both ends of a UTP cable have been connectorized and mounted into outlets, panels, or frames (thereby including losses of the UTP cable, connectors, frames, etc.), perform the following tests:
        1) Test #1 – Wire Map or line mapping test (end-to-end connectivity).
5. Open conductors.
6. Shorted conductors.
7. Crossed pairs.
8. Reversed pairs.
    a. Test #2 UTP Test Results Including:
9. Attenuation (dB)

10. Return Loss
11. Attenuation / NEXT (pr to pr)
12. Attenuation / NEXT (powersum)
    a. NEXT (pr to pr)
    b. NEXT (powersum)
    c. ELFEXT(pr to pr)
    d. ELFEXT(powersum)
13. Test results and Communication circuit schedules: Submit copies of a final test report and communication circuit schedules in electronic copies (CD media), which confirms that the cabling infrastructure has been tested, labeled and documented.
14. All test results shall be delivered to Owners Project Manager within four weeks after completion of the installation.
15. The report shall include pass/fail results and or actual cable test data and required cable measurements and/or calculations for all installed cables.
16. Each report shall include: all completed cable test forms in order by room number.
17. An installer-signed statement of compliance with specifications herein.
18. All certificates of test equipment calibration/certification.
19. All certificates of training for test personnel.
20. All fiber optic horizontal and backbone cable strands and port ID's, cable length's, each termination room ID and test results compliant with applicable standards and specifications.
21. All Category 6 UTP horizontal cable, outlet and port ID's, cable length's, each termination room ID and test results compliant with applicable standards and specifications.
22. All backbone UTP cable, termination block, frame and port ID's, cable length's, each termination room ID and test results compliant with applicable standards and specifications.
23. The cable test results and communication schedules shall be formatted as spreadsheets and submitted in electronic file (MS-Access, Excel 7.0 or approved equal). Automated calculations (equations) may be inserted by the Contractor to further reduce documentation time. Data that is repetitive may be entered once and duplicated electronically or by photocopy to reduce entry time on the forms. Hard copy report submittals are still required as stated above.
24. Provide test result software data copies to Cable Documentation programmer (see this section and sections 270500 for documentation requirements for the cable management system.
25. As-built documentation complying with Part-1, 1.07 Submittals shall be provided as part of the SCS contract. As-built drawings of floor plans with all outlets shown and numbered as installed. All cable routings (trunk lines) and elevations of each Communications Room indicating outlet, tie and riser cable terminations shall be required. All termination sequences shall be in schedule form (spreadsheet) affixed to the associated floor plan sheet with that IDF elevation detail. All cable test results along with documented testing procedures shall be included in this information. All addendum information or project revisions resulting in drawing changes that occur during the construction period shall be documented and included in the as-built material. All required as-build documentation is mandatory and shall be required prior to project closeout.
26. Cable lengths of all installed horizontal and backbone copper and fiber optic cables. Distances incorporated into the As-Built drawings shall be the actual distances recorded and documented during OTDR and Cable Analyzer testing. Cat 6 cable distances shall be measured in place

3.7 CONSTRUCTION WASTE MANAGEMENT

A. Construction Waste Management: Construction Waste shall be managed in accordance with provisions of Section 01 74 19 - Construction Waste Management and Disposal. Documentation shall be submitted to satisfy the requirements of that section.

PART 4 MEASUREMENT

4.1 METHOD OF MEASUREMENT

A. Percent of work complete shall be the method for measuring progress.

PART 5 PAYMENT

5.1 METHOD OF PAYMENT

A. Percent of work complete based on the approved schedule of values.

END OF SECTION

SECTION 271100 - COMMUNICATIONS EQUIPMENT ROOM FITTINGS

PART 1 GENERAL

1.1 RELATED DOCUMENTS

A. Drawings and general provisions of the Contract, including General and Special Conditions and Division 01 Specification Sections, apply to this Section.

B. Refer to Low Voltage Responsibility Matrix provided on cover sheet of drawings for additional procurement and installation responsibilities.

1.2 SUMMARY

A. Section Includes:
   1. Telecommunications mounting elements.
   2. Backboards.
   3. Telecommunications equipment racks and cabinets.
   4. Grounding.

1.3 RELATED REQUIREMENTS:

A. Section 271300 - Communications Backbone Cabling for voice and data cabling associated with system panels and devices, and Intermediate Distribution Facilities.

B. Section 271500 - Communications Horizontal Cabling for voice and data cabling associated with system panels and devices.

C. Section 280513 - Conductors and Cables for Electronic Safety and Security for voice and data cabling associated with system panels and devices.

D. Alternates: Refer to Division 01 Section 012300 - Alternates for description of Work in this Section affected by alternates.

1.4 DEFINITIONS

A. BICSI: Building Industry Consulting Service International.

B. IDF: Intermediate Distribution Facility.

C. LAN: Local area network.

D. RCDD: Registered Communications Distribution Designer.

1.5 ACTION SUBMITTALS

A. Refer to Section 013300 - Submittal Requirements for submittal procedures.

B. Product Data: For each type of product.
   1. Include construction details, material descriptions, dimensions of individual components and profiles, and finishes for equipment racks and cabinets.
   2. Include rated capacities, operating characteristics, electrical characteristics, and furnished specialties and accessories.
   3. Include data substantiating that materials comply with requirements.

C. Shop Drawings: For communications equipment room fittings. Include plans, elevations, sections, details, and attachments to other work.
   1. Detail equipment assemblies and indicate dimensions, weights, loads, required clearances, method of field assembly, components, and location and size of each field connection.
   2. Equipment Racks and Cabinets: Include workspace requirements and access for cable connections.
   3. Grounding: Indicate location of grounding bus bar and its mounting detail showing standoff insulators and wall mounting brackets.

1.6 INFORMATIONAL SUBMITTALS

A. Qualification Data: For Contractor, Installer, qualified layout technician, installation supervisor, and field inspector.

B. Seismic Qualification Certificates: For equipment frames from manufacturer.
   1. Basis for Certification: Indicate whether withstand certification is based on actual test of assembled components or on calculation.
   2. Dimensioned Outline Drawings of Equipment Unit: Identify center of gravity and locate and describe mounting and anchorage provisions. Base certification on the maximum number of components capable of being mounted in each rack type. Identify components on which certification is based.
   3. Detailed description of equipment anchorage devices on which the certification is based and their installation requirements.

1.7 CLOSEOUT SUBMITTALS

A. As-Built Plans: Submit complete as-built plans of all Work, including interface with other Work, in accordance with requirements as specified in Section 013300 - Submittal Requirements.

1.8 QUALITY ASSURANCE

A. Installer Qualifications: Cabling Installer must have personnel certified by BICSI on staff.
   1. Layout Responsibility: Preparation of Shop Drawings shall be under the direct supervision of Commercial Installer, Level 2.
   2. Installation Supervision: Installation shall be under the direct supervision of Registered Technician, who shall be present at all times when Work of this Section is performed at Project site.
   3. Field Inspector: Currently registered by BICSI as Commercial Installer, Level 2 to perform the on-site inspection.

B. CONSTRUCTION WASTE MANAGEMENT
   1. Construction waste shall be managed in accordance with provisions of Section 017419 "Construction Waste Management and Disposal". Documentation shall be submitted to satisfy the requirements of that Section.

PART 2 PRODUCTS

2.1 PERFORMANCE REQUIREMENTS

A. Seismic Performance: Equipment frames shall withstand the effects of earthquake motions determined according to ASCE/SEI 7.

1. The term "withstand" means "the unit will remain in place without separation of any parts from the device when subjected to the seismic forces specified and the unit will be fully operational after the seismic event."

2.2 BACKBOARDS

A. Backboards: Plywood, fire-retardant treated, 3/4 by 48 by 96 inches. Comply with requirements for plywood backing panels specified in Section 061000 - Rough Carpentry.

2.3 EQUIPMENT FRAMES

A. See Section 271116 - Equipment Cabinets and Racks.

B. Manufacturers: Subject to compliance with requirements, provide products by one of the following:
   1. ADC.
   2. Belden Inc.
   3. Cooper B-Line.
   4. Emerson Network Power Connectivity Solutions.
   5. Hubbell Premise Wiring.
   6. Leviton Commercial Networks Division.
   7. Middle Atlantic Products, Inc.
   8. Ortronics, Inc.
   9. Panduit Corp.
   10. Siemon Co. (The).
   11. Tyco Electronics Corporation; AMP Products.
   12. or approved equal.

C. General Frame Requirements:
   1. Distribution Frames: Freestanding and wall-mounting, modular-steel units designed for telecommunications terminal support and coordinated with dimensions of units to be supported.
   2. Module Dimension: Width compatible with EIA 310-D standard, 19-inch panel mounting.
   3. Finish: Manufacturer's standard, baked-polyester powder coat.

D. Floor-Mounted Racks: Modular-type, steel construction.
   1. Vertical and horizontal cable management channels, top and bottom cable troughs, grounding lug and a power strip.
   2. Baked-polyester powder coat finish.

E. Modular Freestanding Cabinets:
   1. Removable and lockable side panels.
   2. Hinged and lockable front and rear doors.
   3. Adjustable feet for leveling.
   4. Screened ventilation openings in the front and rear door.
   5. Cable access provisions in the roof and base.
   6. Grounding bus bar.
   7. Roof-mounted, 550-cfm (260-L/s) fan with filter.
   8. Power strip.
   9. Baked-polyester powder coat finish.
   10. All cabinets keyed alike.

F. Modular Wall Cabinets:
   1. Wall mounting.
   2. Steel construction.
   3. Treated to resist corrosion.
   4. Lockable front and rear doors.
   5. Louvered side panels.
   6. Cable access provisions top and bottom.
   7. Grounding lug.
   8. Roof-mounted, 250-cfm (118-L/s) fan.
   9. Power strip.
   10. All cabinets keyed alike.

G. Cable Management for Equipment Frames:
   1. Metal, with integral wire retaining fingers.
   2. Baked-polyester powder coat finish.
   3. Vertical cable management panels shall have front and rear channels, with covers.
   4. Provide horizontal crossover cable manager at the top of each relay rack, with a minimum height of two rack units each.

2.4 POWER STRIPS – (PDU)

A. Power Strips: Comply with UL 1363.
   1. Listed and labeled as defined in NFPA 70, by a qualified testing agency, and marked for intended location and application.
   2. Rack and cabinet mounting.
   3. LED indicator lights for power and protection status.
   4. LED indicator lights for reverse polarity and open outlet ground.
   5. Circuit Breaker and Thermal Fusing: When protection is lost, circuit opens and cannot be reset.
   6. Circuit Breaker and Thermal Fusing: Unit continues to supply power if protection is lost.
   7. Cord connected with 15-foot (4.5-m) line cord.
   8. Rocker-type on-off switch, illuminated when in on position.
   9. Protection modes shall be line to neutral, line to ground, and neutral to ground. UL 1449 clamping voltage for all three modes shall be not more than 330 V.
   10. Intelligent metering.
   11. Used in powered racks, frames and cabinets.

B. Manufacturers: Subject to compliance with requirements, provide products by one of the following:
   1. APC for cabinets and racks.
   2. Or Approved equal

2.5 GROUNDING

A. Comply with requirements in Section 260526 - Grounding and Bonding for Electrical Systems for grounding conductors and connectors.

B. Telecommunications Main Bus Bar:
   1. Connectors: Mechanical type, cast silicon bronze, solderless exothermic-type wire terminals, and long-barrel, two-bolt connection to ground bus bar.

2. Ground Bus Bar: Copper, minimum 1/4 inch thick by 4 inches wide with 9/32-inch holes spaced 1-1/8 inches apart.
3. Stand-Off Insulators: Comply with UL 891 for use in switchboards, 600 V. Lexan or PVC, impulse tested at 5000 V.

C. Comply with J-STD-607-A.

2.6 LABELING

A. Comply with TIA-606-A and UL 969 for a system of labeling materials, including label stocks, laminating adhesives, and inks used by label printers.

PART 3 EXECUTION

3.1 ENTRANCE FACILITIES

A. Contact Owners Project Manager and arrange for installation of demarcation point, protected entrance terminals, and a housing when so directed by Owners Project Manager.

B. Comply with requirements in Section 270528 "Pathways for Communications Systems" for materials and installation requirements for underground, buried or aerial pathways.

3.2 INSTALLATION

A. Comply with NECA 1.

B. Comply with BICSI TDMM for layout and installation of communications equipment rooms.

C. Copper cabling at the entry point to any building shall be provided with surge and sneak current protection using a 5-pin solid state protection module.

D. Bundle, lace, and train conductors and cables to terminal points without exceeding manufacturer's limitations on bending radii. Install lacing bars and distribution spools.

E. Coordinate layout and installation of communications equipment with Owner's telecommunications and LAN equipment and service suppliers. Coordinate service entrance arrangement with local exchange carrier.
1. Meet jointly with telecommunications and LAN equipment suppliers, local exchange carrier representatives, and Owner to exchange information and agree on details of equipment arrangements and installation interfaces.
2. Record agreements reached in meetings and distribute them to other participants.
3. Adjust arrangements and locations of distribution frames, cross-connects, and patch panels in equipment rooms to accommodate and optimize arrangement and space requirements of telephone switch and LAN equipment.
4. Adjust arrangements and locations of equipment with distribution frames, cross-connects, and patch panels of cabling systems of other communications, electronic safety and security, and related systems that share space in the equipment room.

F. Coordinate location of power raceways and receptacles with locations of communications equipment requiring electrical power to operate.

3.3 SLEEVE AND SLEEVE SEAL INSTALLATION FOR ELECTRICAL PENETRATIONS

A. Install sleeves and sleeve seals at penetrations of exterior floor and wall assemblies. Comply with requirements in Section 270544 - Sleeves and Sleeve Seals for Communications Pathways and Cabling.

3.4 FIRESTOPPING

A. Comply with requirements in Section 078400 - Firestopping.

B. Comply with TIA-569-B, Annex A, "Firestopping."

C. Comply with BICSI TDMM, "Firestopping Systems" Article.

3.5 GROUNDING

A. Install grounding according to BICSI TDMM, "Grounding, Bonding, and Electrical Protection" Chapter.

B. Comply with J-STD-607-A.

C. Locate grounding bus bar to minimize the length of bonding conductors. Fasten to wall allowing at least 2-inch clearance behind the grounding bus bar. Connect grounding bus bar with a minimum No. 4 AWG grounding electrode conductor from grounding bus bar to suitable electrical building ground.

D. Bond metallic equipment to the grounding bus bar, using not smaller than No. 6 AWG equipment grounding conductor.
   1. Bond the shield of shielded cable to the grounding bus bar in communications rooms and spaces.

3.6 IDENTIFICATION

A. Identify system components, wiring, and cabling complying with TIA/EIA-606-A. Comply with requirements in Division 26 for Identification for Electrical Systems.

B. Comply with requirements in Section 099000 - Painting AND cOATINGS" for painting backboards. For fire-resistant plywood, do not paint over manufacturer's label.

C. Paint and label colors for equipment identification shall comply with TIA/EIA-606-A for level of administration including optional identification requirements of this standard.

D. Labels shall be preprinted or computer-printed type.

PART 4 MEASUREMENT

4.1 METHOD OF MEASUREMENT

A. Percent of work complete shall be the method for measuring progress.

PART 5 PAYMENT

5.1 METHOD OF PAYMENT

A. Percent of work complete based on the approved schedule of values.

END OF SECTION

SECTION 271116 - COMMUNICATIONS CABINETS AND RACKS

PART 1 GENERAL

1.1 SUMMARY

A. Contractor shall provide 2 post open frame relay racks, 2-post open optical distribution frames, interior and exterior enclosed floor standing and wall mounted equipment cabinets, terminal cabinets, exterior communications enclosures and all required accessories and grounding systems.

B. Related documents: as specified in Section 270500 – Basic Telecommunication Requirements.

C. Related Sections: as specified in Section 270500 – Basic Telecommunication Requirements and the following Sections:
   1. Division 1 Sections
   2. All Division 27 and 28 sections as applicable.

D. The work described in this Specification includes all labor, engineering, design work, materials, equipment and services necessary to install new, expand existing, and install owner-provided equipment as specified. Materials or labor not specifically mentioned in this specification, or not shown on the Contract Drawings, but required for proper installation, performance, and operation of the equipment or systems, shall be furnished and installed by the Contractor.

E. Project Coordination
   1. Coordinate the Work of this section with that of other Divisions as required to ensure that the entire work of this Project will be carried out in an orderly, complete and coordinated fashion.
   2. The Contractor is required to supply all necessary supervision and coordination of information to any contractor or subcontractor who is performing work to accommodate the Work of this Section and minimize interferences.
   3. Prior to installation of any work, participate in detailed coordination planning meetings with all other building utilities system trades, under the direction of the General Contractor, so as to completely establish routings, elevations, space requirements and coordination of the work with all other trades.
   4. Coordinate exact mounting locations of equipment racks and cabinets within the communications rooms with the Owner and Engineer prior to installation.
   5. The work to be completed will be performed in an operational facility. As such, the Contractor shall be required to perform the work in a manner that minimizes disruption to daily operations and the mission critical systems that comprise much of this scope of work.
   6. Any system outages necessary as part of this scope of work shall be coordinated with the Owner. System shutdown shall be submitted to and approved by the Owner two weeks prior to the shutdown.
   7. Any work penetrating concrete walls or floors that require saw cutting and/or core drilling and shall require approval by the Engineer. X-ray is required in advance of any penetration deeper than 1-inch in existing concrete elements.

1.2 RELATED SECTIONS:

A. Division 01 – General Requirements.

B. Section 078413 for firestopping requirements

C. Division 23 – Mechanical Systems

D. Division 26 – Electrical

E. Section 270505 – Selective Demolition Communications Systems

F. Section 270528 – Pathways for Communications Systems

G. Section 270544 – Sleeves and Sleeve Seals for Communications Pathways and Cabling

H. Section 271000 – Structured Cabling System

I. Section 271500 – Communications Horizontal Cabling

J. Section 281300 – Access Control System

K. Refer to Low Voltage Responsibility Matrix provided on cover sheet of drawings for additional procurement and installation responsibilities.

1.3 SUBMITTALS

A. As specified in Section 270500 – Basic Telecommunications Requirements.

1.4 CODES, STANDARDS AND REFERENCES

A. As specified in Section 270500 – Basic Telecommunications Requirements and Section 271000 – Structured Cabling Systems and the following standards.
   1. Telcordia
      a. GR-63 NEBS™ Requirements: Physical Protection.
   2. Underwriters Laboratories (UL)
      a. UL 1363: Relocatable Power Taps

1.5 QUALITY ASSURANCE

A. Standards of workmanship shall meet or exceed accepted telecommunications systems industry installation practices.

B. Quality assurance shall be as specified in Section 27 05 00 – Basic Telecommunication Requirements.

1.6 SUBSTITUTIONS OF EQUIPMENT

A. As specified in Section 270500 – Basic Telecommunications Requirements.

1.7 EQUIPMENT CERTIFICATION

A. As specified in Section 270500 – Basic Telecommunications Requirements.

1.8 STORAGE AND DELIVERY

A. As specified in Section 270500 – Basic Telecommunications Requirements.

1.9 WARRANTY

A. As specified in Section 270500 – Basic Telecommunications Requirements.

PART 2 PRODUCTS

2.1 GENERAL

A. All equipment shall be new and unused.

B. All equipment, materials, accessories, devices, and other facilities covered by this specification or noted on the contract drawings shall be the best suited for the intended use and shall be provided by a single manufacturer.

C. Reference Section 271100 Part 2 also.

2.2 EQUIPMENT RACKS AND CABINETS

A. Free Standing 2 Post Open Frame Relay Racks
   1. Free standing 2 post open frame racks shall be standard EIA 19-inch racks for supporting telecommunication equipment and be provided in Intermediate Distributions Frame (IDF) rooms and the communications spaces as noted on the drawings. The racks shall meet the following requirements and be provisioned with accessories listed below:
      a. Racks shall be manufactured from 6061-T6 or 6063-T6 aluminum with a minimum overall loading capacity of 1000 lbs.
      b. Shall be furnished with bottom mounting pre-drilled flanges both front and rear for securing to floor and top mounted front and rear structural angles.
      c. Rack shall be designed with a minimum of 45 RU spaces (1.75” per RU – Rack Unit) mounting increments with an overall depth of 6” and an overall height of 84-inches.
      d. Rack vertical rails shall have threaded mounting holes spaced 5/8”-5/8”-1/2” alternating mounting hole pattern. Mounting holes shall be spaced along the length of the rail faces on both sides for the full 45 RU of equipment installation.
      e. Shall have a manufacturer applied black finish, with contrasting marks and sequential numbering of RU spaces.
      f. Shall be UL Listed and meet EIA 310 standard.
      g. Rack vertical rails shall have a 6-inch channel depth.
      h. Include a minimum of 50 equipment-mounting screws (Phillips & Straight) and 5-cable management loops.
      i. Racks shall include gang-able hardware for locations where more than a single rack is required.
      j. Provide equipment racks with grounding kits and ground racks within the Telecommunications Spaces.
      k. Racks shall be supplied with hardware accessories such as cable managers, wire distribution rings, shelves and grounding kits to properly manage cabling and provide support and grounding for connection equipment.
   2. Design Selection:
      a. Chatsworth Products Inc. 66353-XO3-X (Gray) with 40604-003 Concrete Slab Install Kit.
      b. Accessories:
         1) Vertical Cable Management – top to bottom open cable trough with flip open latches. Provide on each end of relay rack line-up and between each relay rack.
         2) Horizontal Cable Management. Provide fiber jumper trays 19” – 2U x 3-1/2” deep between each fiber optic termination or patch panel and below last fiber optic termination or patch panel. Provide 2U x 4”D 19” Horizontal copper cable managers

between each RJ45 Patch Panel, Ethernet Switch and below the last copper termination facility mounted in the rack.

3) All accessories shall be manufactured by and designed for use with the specified Relay Rack.
4) Power Strip: Two - Raritan (See Section 271100)

B. EQUIPMENT CABINETS – FLOOR STANDING
   1. Floor Standing Equipment Cabinets: Middle Atlantic MRK-4442 gangable series or approved equal. Enclosed Equipment Racks shall be provided with the following accessories:
      a. Vent Top Panel w/fans #MW-4QFT-FC
      b. Copper Bus Bar #BB-44-1
      c. Power Strip: Two - Raritan or APC (See Section 271100)
      d. Electrical Isolation top bracket #ISO-KOP
      e. Lockable vented front door #PFD-44
      f. Lockable vented rear door #MW-VRD-44
      g. Horizontal cable lace strips (3) – LBH-1930-T
      h. Vertical cable lace strips (1) – LACE-44-OWP
      i. Equipment shelving.(3 per rack)
      j. Cabinet joining (ganging) kit
      k. Provide a caged light at the top of each equipment cabinet
      l. Vertical cable management
      m. Provide solid end panels in first and last enclosed equipment cabinet in a line-up or where there is a change in systems type.
      n. Fill all unused spaces with blank panels

C. EQUIPMENT CABINETS – WALL MOUNTED
   1. Wall mounted Equipment Cabinets: Middle Atlantic CWR-xx-30-PD series or approved equal. Where xx = Rack Units (Refer to floor plans).
   2. Racks shall be:
      a. Swing out type
      b. UL Listed
      c. Rated for 200Lb load
      d. Color – Black
      e. Reversible locking / latching door
      f. Racks shall be provided with the following accessories:
         1) CWR Fan Kit
         2) Copper Bus Bar #BB-44-1
         3) Power Strip: 1 - Raritan DPXS12-20
         4) 3-1/2” Deep 2U Horizontal cable managers between all patch / termination panels and Ethernet switches

D. EXTERIOR EQUIPMENT ENCLOSURES
   1. Provide weatherproof NEMA 3R enclosures as indicated on the drawings. Enclosures shall be utilized to house infrastructure cabling. Enclosures shall meet NEC requirements. Enclosures shall meet the following requirements:
      a. Size: 24”H x 24”W x 12”D
      b. Door: lockable. Coordinate key core with Owner
      c. Design Selection: Hoffman or approved equal.

2.3 EQUIPMENT CABINET CABLE MANAGEMENT

A. Equipment Racks shall be provided with cable management designed for both vertical and horizontal management of cable terminating and routing within the equipment racks. Cable management shall be provisioned as indicated on the project drawings.

B. Horizontal Cable Manager
   1. Horizontal Cable Manager shall be designed to route cabling across the full width of each equipment rack to the vertical management described herein. The horizontal management shall:
      a. Be manufactured to standard rack unit (RU) increments and be designed for standard EIA equipment configurations.
      b. Be provided with cable control “fingers” extending from the back surface of the manager, at both top and bottom, perpendicular to the frame face for cable control into the manager. Finger depth shall provide a minimal useable cable management depth of three inches. Finger spacing across unit shall provide systematic entry of cables into management unit.
      c. Be provided with a single cover that hinges either from top or bottom with positive latching on the other and opens a full 180 degrees. Cover shall be completely removable without tools if required.
      d. Be furnished with all mounting hardware to attach manager to rack.
   2. Subject to compliance with product requirements, design selection manufacturers shall include:
      a. Chatsworth Product, Inc – Universal Horizontal Cable Manager
      b. Panduit – NetManager
      c. AMP Netconnect

C. Vertical Cable Manager
   1. Vertical Cable Manager shall be double sided designed to route cabling the full height of each equipment rack face from horizontal cable management, cable runway and patch cable management. The vertical management shall:
      a. Extend the entire rack height and be installable on frames specified herein.
      b. Be six inches in width and be provided with four cable management spools for management of cable routed in cable manager. Spools shall be mounted to back plane and be spaced uniformly in unit.
      c. Be provided with cable control “fingers” extending from the back surface of the manager, at both sides, perpendicular to the frame face for cable control into the manager. Finger depth shall provide a minimal useable cable management depth of four inches. Finger spacing shall provide cable entry increments that match that of RU configuration.
      d. Be provided with a single cover that hinges either from side with positive latching on the other and shall swing open a minimum of 135 degrees when installed adjacent to horizontal cable management. Cover shall be completely removable without tools if required.
      e. Be furnished with all mounting hardware to attach manager to rack.
   2. Subject to compliance with product requirements, design selection manufacturers shall include:
      a. Chatsworth Product, Inc – MCS-EFX
      b. Panduit – PatchRunner

c. AMP Netconnect

PART 3 EXECUTION

3.1 GENERAL

A. As specified in Section 270500 – Basic Telecommunications Requirements.

B. Installations shall meet or exceed industry standards and installation practices listed herein.

C. Product installations failing to meet standards and practices shall be removed and replaced at no additional cost to the Owner.

D. The Contractor shall be responsible for any damage to any surfaces or work disrupted as a result of his work. Repair of surfaces including painting shall be included as necessary.

E. Labeling of racks, cabinets and enclosures: each rack, cabinet and enclosure depicted in the drawings as a portion of this Section's work shall be permanently labeled with engraved black on white laminate defining rack / cabinet / or enclosure identification number and user.

3.2 INSTALLATION PRACTICES

A. Rack mounted equipment: as a general practice, Contractor shall run power cables, control cables, and high level cables on the left side of an equipment rack as viewed from the rear.
   1. Contractor shall run other cables on the right side of an equipment rack, as viewed from the rear.
   2. For equipment mounted in drawers or on slides, provide the interconnecting cables with a service loop of not less than three feet and ensure that the cable is long enough to allow full extension of drawer or slide.
   3. General: the locations of raceways, stub ups, outlets, panels, equipment racks and cabinets and other related products as indicated on the drawings are diagrammatic in location. Contractor should have precise and definite locations accepted by the Engineer before proceeding with the installation.
   4. As specified in Section 270500 – Basic Telecommunications Requirements.

3.3 INSPECTIONS

A. As specified in Section 270500 – Basic Telecommunications Requirements.

PART 4 MEASUREMENT

4.1 METHOD OF MEASUREMENT

A. Percent of work complete shall be the method for measuring progress.

PART 5 PAYMENT

5.1 METHOD OF PAYMENT

A. Percent of work complete based on the approved schedule of values.

END OF SECTION

SECTION 271300 - COMMUNICATIONS BACKBONE CABLING

PART 1 GENERAL

1.1 RELATED DOCUMENTS

A. Drawings and general provisions of the Contract, including General and Special Conditions and Division 01 Specification Sections, apply to this Section.

B. Refer to Low Voltage Responsibility Matrix provided on cover sheet of drawings for additional procurement and installation responsibilities.

1.2 SUMMARY

A. Section Includes:
   1. Pathways.
   2. UTP cable.
   3. Single Mode Fiber Optic Cable 9/125 micrometer.
   4. Cable connecting hardware, patch panels, and cross-connects.
   5. Cabling identification products.

1.3 RELATED SECTIONS:

A. Section 260536 - Cable Trays for Electrical Systems for cable trays.

B. Section 260553 - Identification for Electrical Systems for identification of cable systems and components.

C. Section 270528 - Pathways for Communication Systems for wire pathways, wireways, conduit and fittings.

D. Alternates: Refer to Division 01 Section 012300 - Alternates for description of Work in this Section affected by alternates.

1.4 DEFINITIONS

A. BICSI: Building Industry Consulting Service International.

B. Cross-Connect: A facility enabling the termination of cable elements and their interconnection or cross-connection.

C. EMI: Electromagnetic interference.

D. IDC: Insulation displacement connector.

E. LAN: Local area network.

F. RCDD: Registered Communications Distribution Designer.

G. UTP: Unshielded twisted pair.

1.5 BACKBONE CABLING DESCRIPTION

A. Backbone cabling system shall provide interconnections between communications equipment rooms, main terminal space, and entrance facilities in the telecommunications cabling system structure. Cabling system consists of backbone cables, intermediate and main cross-connects,

mechanical terminations, and patch cords or jumpers used for backbone-to-backbone cross-connection.

B. Backbone cabling cross-connects may be located in communications equipment rooms or at entrance facilities. Bridged taps and splitters shall not be used as part of backbone cabling.

C. All work designed and constructed under this section shall comply with TIA 568, 569, 606 and relevant Building Industry Construction Service, Inc. (BICSI Standards).

D. Work shall consist of furnishing all labor, equipment, supplies, and materials, unless otherwise specified, necessary for the installation of complete system of telecommunications pathways, spaces and cabling as required by the specifications and as shown on the Drawings, subject to the terms and conditions of the contract. The Work shall also include the completion of those details of work not mentioned or shown which are necessary for the successful operation of all telecommunications systems.

E. Backbone copper and fiber cabling are assigned unique numbers that allow cabling pair and strand assignments to be managed by the City IT cable management system. Backbone (BB) and Inter-Building (IB) cable number assignments shall be coordinated with the City IT to ensure that numerical assignments do not conflict with existing cable designations used elsewhere in the facility.

F. Backbone fiber cabling shall be OSP rated for connection between buildings.

1.6 PERFORMANCE REQUIREMENTS

A. General Performance: Backbone cabling system shall comply with transmission standards in TIA-568.1-D, when tested according to test procedures of this standard.

1.7 ACTION SUBMITTALS

A. Refer to Section 013300 - Submittal Requirements for submittal procedures.

B. Product Data: Provide complete product data for each element of cabling, and equipment proposed. Where a data sheet covers multiple items specifically mark items proposed for use on the Project.
   1. Include data substantiating that materials comply with requirements.

C. Shop Drawings:
   1. System Labeling Schedules: Electronic copy of labeling schedules, in software and format selected by Owner.
   2. System Labeling Schedules: Electronic copy of labeling schedules that are part of the cabling and asset identification system of the software.
   3. Cabling administration drawings and printouts.
   4. Wiring diagrams to show typical wiring schematics including the following:
      a. Cross-connects.
      b. Patch panels.
      c. Patch cords.
   5. Cross-connects and patch panels. Detail mounting assemblies and show elevations and physical relationship between the installed components.
   6. Cable tray layout, showing cable tray route to scale, with relationship between the tray and adjacent structural, electrical, and mechanical elements. Include the following:
      a. Vertical and horizontal offsets and transitions.

b. Clearances for access above and to side of cable trays.
c. Vertical elevation of cable trays above the floor or bottom of ceiling structure.
d. Load calculations to show dead and live loads as not exceeding manufacturer's rating for tray and its support elements.

1.8 INFORMATIONAL SUBMITTALS

A. Qualification Data: For Contractor, installer, qualified layout technician, installation supervisor, and field inspector.

B. Source quality-control reports.

C. Field quality-control reports.

D. Maintenance Data: For splices and connectors to include in maintenance manuals.

1.9 CLOSEOUT SUBMITTALS

A. Software and Firmware Operational Documentation:
1. Complete test records for all cable tests.
2. Diagrams indicating route, cable types, pair or strand count and cable ID numbers used in the Project.

B. As-Built Plans: Submit complete as-built plans of all Work, including interface with other Work, in accordance with requirements as specified in Section 013300 "Submittal Procedures".
1. Provide complete as-built drawings for all IDF rooms, backbone conduit routes and tray routes indicating actual routing.

1.10 MAINTENANCE MATERIAL SUBMITTALS

A. Furnish extra materials that match products installed and that are packaged with protective covering for storage and identified with labels describing contents.
1. Patch-Panel Units: One (1) of each type.
2. Connecting Blocks: One (1) of each type.

1.11 QUALITY ASSURANCE

A. Installer Qualifications: Cabling Installer must have personnel certified by BICSI on staff.
1. Layout Responsibility: Preparation of Shop Drawings and Cabling Administration Drawings and field testing program development by an RCDD.
2. Installation Supervision: Installation shall be under the direct supervision of Registered Technician, who shall be present at all times when Work of this Section is performed at Project site.
3. Testing Supervisor: Currently certified by BICSI as an RCDD to supervise on-site testing.

B. Testing Agency Qualifications: An NRTL.
1. Testing Agency's Field Supervisor: Currently certified by BICSI as an RCDD to supervise on-site testing.

C. Surface-Burning Characteristics: As determined by testing identical products according to ASTM E 84 by a qualified testing agency. Identify products with appropriate markings of applicable testing agency.
1. Flame-Spread Index: 25 or less.
2. Smoke-Developed Index: 50 or less.

D. Electrical Components, Devices, and Accessories: Listed and labeled as defined in NFPA 70, by a qualified testing agency, and marked for intended location and application.

E. Telecommunications Pathways and Spaces: Comply with TIA-569-D.

F. Grounding: Comply with TIA-607-C.

1.12 DELIVERY, STORAGE, AND HANDLING

A. Test cables upon receipt at Project site.
   1. Test optical fiber cable to determine the continuity of the strand end to end. Use optical loss test set.
   2. Test optical fiber cable while on reels. Use an optical time domain reflectometer to verify the cable length and locate cable defects, splices, and connector, including the loss value of each. Retain test data and include the record in maintenance data.
   3. Test each pair of UTP cable for open and short circuits.

1.13 PROJECT CONDITIONS

A. Environmental Limitations: Do not deliver or install cables and connecting materials until wet work in spaces is complete and dry, and temporary HVAC system is operating and maintaining ambient temperature and humidity conditions at occupancy levels during the remainder of the construction period.

B. Verify that field measurements are as shown on Drawings.

C. Where wire and cable routing is not shown, and destination only is indicated, determine exact routing and lengths required by field verification.

1.14 COORDINATION

A. Coordinate layout and installation of telecommunications pathways and cabling with Owner's telecommunications and LAN equipment and service suppliers, and with Owners Project Manager.

1.15 CONSTRUCTION WASTE MANAGEMENT

A. Construction waste shall be managed in accordance with provisions of Section 017419 - Construction Waste Management and Disposal. Documentation shall be submitted to satisfy the requirements of that Section.

PART 2 PRODUCTS

2.1 GENERAL

A. All metal conductors shall be copper.

B. All building wire and cable shall be installed in approved raceways.

C. Materials and Equipment: Acceptable to the authority having jurisdiction and suitable for the use intended, except where more stringent requirements are indicated as described herein.

2.2 PATHWAYS

A. General Requirements: Comply with TIA-569-D.

B. Reference Section 270528 - Pathways for Communication Systems for wire pathways, wireways, conduit and fittings.

C. Cable Support: NRTL labeled for support of Category 6 cabling, designed to prevent degradation of cable performance and pinch points that could damage cable.
   1. Support brackets with cable tie slots for fastening cable ties to brackets.
   2. Lacing bars, spools, J-hooks, and D-rings.
   3. Straps and other devices.

D. Cable Trays:
   1. Comply with requirements in Section 260536 - Cable Trays for Electrical Systems.

E. Conduit and Boxes: Comply with requirements in Section 260533 - Raceway and Boxes for Electrical Systems. Flexible metal conduit shall not be used.
   1. Outlet boxes shall be no smaller than 2 inches wide, 3 inches high, and 2-1/8 inches deep.

2.3 BACKBOARDS

A. Backboards: Plywood, fire-retardant treated, 3/4 by 48 by 96 inches. Comply with requirements in Section 061000 - Rough Carpentry for plywood backing panels.

2.4 UTP CABLE

A. Manufacturers: Subject to compliance with requirements, provide products by one of the following:
   1. Belden CDT Inc.; Electronics Division.
   2. Berk-Tek; a Nexans company.
   3. CommScope, Inc.
   4. Draka USA.
   5. Genesis Cable Products; Honeywell International, Inc.
   6. KRONE Incorporated.
   7. Mohawk; a division of Belden CDT.
   8. Nordex/CDT; a subsidiary of Cable Design Technologies.
   9. Superior Essex Inc.
   10. SYSTIMAX Solutions; a CommScope Inc. brand.
   11. 3M.
   12. Tyco Electronics/AMP Netconnect; Tyco International Ltd.
   13. Panduit Corporation
   14. or approved equal.

B. Description: 100-ohm, 24AWG, 100-pair UTP, formed into 25-pair binder groups covered with a gray thermoplastic jacket and overall metallic shield.
   1. Comply with ICEA S-90-661 for mechanical properties.
   2. Comply with TIA-568-B.1 for performance specifications.
   3. Comply with TIA-568-B.2, Category 6.
   4. Elevator cabling shall be gel filled with an overall polyethylene sheath.
   5. Listed and labeled by an NRTL acceptable to authorities having jurisdiction as complying with UL 444 and NFPA 70 for the following types:
      a. Communications, General Purpose: Type CM or CMG.
      b. Communications, Plenum Rated: Type CMP, complying with NFPA 262.
      c. Communications, Riser Rated: Type CMR, complying with UL 1666.

d. Communications, Limited Purpose: Type CMX.
e. Multipurpose: Type MP or MPG.
f. Multipurpose, Plenum Rated: Type MPP, complying with NFPA 262.
g. Multipurpose, Riser Rated: Type MPR, complying with UL 1666.

2.5 UTP CABLE HARDWARE

A. Manufacturers: Subject to compliance with requirements, provide products by one of the following:
1. American Technology Systems Industries, Inc.
2. Dynacom Corporation.
3. Hubbell Premise Wiring.
4. KRONE Incorporated.
5. Leviton Voice & Data Division.
6. Molex Premise Networks; a division of Molex, Inc.
7. Nordex/CDT; a subsidiary of Cable Design Technologies.
8. Panduit Corp.
9. Siemon Co. (The).
10. Tyco Electronics/AMP Netconnect; Tyco International Ltd.
11. or approved equal.

B. General Requirements for Cable Connecting Hardware: Comply with TIA-568-B.2, IDC type, with modules designed for punch-down caps or tools. Cables shall be terminated with connecting hardware of same category or higher.

C. Connecting Blocks: 110-style IDC for backbone copper cabling. Provide blocks for the number of cables terminated on the block, plus 25 percent spare. Integral with connector bodies, including plugs and jacks where indicated.

D. Cross-Connect: Modular array of connecting blocks arranged to terminate building cables and permit interconnection between cables.
1. Number of Terminals per Field: One for each conductor in assigned cables.

E. Patch Panel: Modular panels housing multiple-numbered jack units with IDC-type connectors at each jack for permanent termination of pair groups of installed cables.
1. Number of Jacks per Field: One for each four-pair UTP cable indicated, plus spares and blank positions adequate to suit specified expansion criteria.

F. Jacks and Jack Assemblies: Modular, color-coded, eight-position modular receptacle units with integral IDC-type terminals.

G. Patch Cords: Factory-made, 4-pair cables in 36-inch, 48-inch lengths; terminated with 8-position modular plug at each end. Termination sequence shall be TIA 568B.
1. Patch cords shall have bend-relief-compliant boots and color-coded icons to ensure Category 6 performance respectively. Patch cords shall have latch guards to protect against snagging.
2. Patch cords shall have color-coded boots for circuit identification.

2.6 OPTICAL FIBER CABLE

A. Manufacturers: Subject to compliance with requirements, provide products by one of the following:
1. Berk-Tek; a Nexans company.

2. CommScope, Inc.
3. Corning Cable Systems.
4. General Cable Technologies Corporation.
5. Mohawk; a division of Belden CDT.
6. Nordex/CDT; a subsidiary of Cable Design Technologies.
7. Optical Connectivity Solutions Division; Emerson Network Power.
8. Superior Essex Inc.
9. SYSTIMAX Solutions; a CommScope Inc. brand.
10. 3M.
11. Tyco Electronics/AMP Netconnect; Tyco International Ltd.
12. AFL Enterprise Air Blown Fiber (Basis of Design)
13. eABF SWR Enterprise Air-Jetted Fiber Cable
14. eABF Enterprise Air-Jetted Fiber Cable – plenum-rated
15. or approved equal.

B. Description: Single-mode, 125-micrometer, 12, 24, 36, 48, 72, 96, 144-fiber, nonconductive, tight buffer, optical fiber cable. Riser-rated, Plenum-rated
   1. Comply with ITU G.652.D.
   2. Comply with ICEA S-83-596 for mechanical properties.
   3. Comply with TIA-568-B.3 for performance specifications.
   4. Comply with TIA-492AAAA-B, TIA-492AAAA-A for detailed specifications.
   5. Listed and labeled by an NRTL acceptable to authorities having jurisdiction as complying with UL 444, UL 1651, and NFPA 70 for the following types:
      a. General Purpose, Nonconductive: Type OFN or OFNG.
      b. Plenum Rated, Nonconductive: Type OFNP, complying with NFPA 262.
      c. Riser Rated, Nonconductive: Type OFNR, complying with UL 1666.
      d. General Purpose, Conductive: Type OFC or OFCG].
      e. Plenum Rated, Conductive: Type OFCP, complying with NFPA 262.
      f. Riser Rated, Conductive: Type OFCR, complying with UL 1666.
   6. Conductive cable shall be steel armored type.
   7. Maximum Attenuation: dB/km at 850 nm; 1.5 dB/km at 1300 nm for multi-mode fiber.
   8. Single Mode fiber shall be type SMF28E.
   9. Minimum Modal Bandwidth: 160 MHz-km at 850 nm; 500 MHz-km at 1300 nm for multi-mode fiber.

C. Jacket:
   1. Jacket Color: Aqua for 50/125-micrometer cable, Orange for 62.5/125-micrometer cable, Yellow for Single Mode Fiber.
   2. Cable cordage jacket, fiber, unit, and group color shall be according to TIA-598-B.
   3. Imprinted with fiber count, fiber type, and aggregate length at regular intervals not to exceed 40 inches.

2.7 OPTICAL FIBER CABLE HARDWARE

A. Manufacturers: Subject to compliance with requirements, provide products by one of the following:
   1. ADC.
   2. American Technology Systems Industries, Inc.
   3. Berk-Tek; a Nexans company.

4. Corning Cable Systems.
5. Dynacom Corporation.
6. Hubbell Premise Wiring.
7. Molex Premise Networks; a division of Molex, Inc.
8. Nordex/CDT; a subsidiary of Cable Design Technologies.
9. Optical Connectivity Solutions Division; Emerson Network Power.
10. Siemon Co. (The).
11. Superior Modular Products.
12. AFL Polimod

B. Cross-Connects and Patch Panels: Modular panels housing multiple-numbered cable connectors. Connector type for all strands except those used for analog services shall be type LC.
   1. Number of Connectors per Field: One (1) for each fiber of cable or cables assigned to field, plus spares and blank positions adequate to suit specified expansion criteria.

C. Patch Cords: Factory-made, single or dual-fiber cables in 36-inch incremental lengths.

D. Cable Connecting Hardware:
   1. Comply with Optical Fiber Connector Intermateability Standards (FOCIS) specifications of TIA-604-2, TIA-604-3-A, and TIA-604-12. Comply with TIA-568-B.3.
   2. Use LC connector modules.
   3. Quick-connect, simplex and duplex, Type LC connectors. Insertion loss not more than 0.75 dB.
   4. Rack mount fiber patch panel with connector modules.

E. Innerduct: Fabric type for 4” conduit with 3 cells.
   1. 1.

2.8 GROUNDING

A. Comply with requirements in Section 260526 "Grounding and Bonding for Electrical Systems" for grounding conductors and connectors.

B. Comply with ANSI-J-STD-607-A.

2.9 IDENTIFICATION PRODUCTS

A. Comply with TIA-606-A and UL 969 for a system of labeling materials, including label stocks, laminating adhesives, and inks used by label printers.

B. Reference Section 260553 "Identification for Electrical Systems" for identification of cable systems and components.

2.10 SOURCE QUALITY CONTROL

A. Testing Agency: Engage a qualified testing agency to evaluate cables.

B. Factory test cables on reels according to TIA-568.1-D.

C. Factory test UTP cables according to TIA-568.2-D.

D. Factory test multimode optical fiber cables according to TIA-526-14-C and TIA-568.3-D.

E. Cable will be considered defective if it does not pass tests and inspections.

F. Prepare test and inspection reports.

PART 3 EXECUTION

3.1 GENERAL

A. All Work to be coordinated with and approved by City IT and Owners Project Manager.

B. All Work to be coordinated with existing systems at the City.

3.2 ENTRANCE FACILITIES

A. Coordinate backbone cabling with the protectors and demarcation point provided by communications service provider.

3.3 WIRING METHODS

A. Verify pathways are open, continuous and clear of debris before installing cables.

B. Wiring Method: Install cables in raceways and cable trays except within consoles, cabinets, desks, and counters. Conceal raceway and cables except in unfinished spaces.
   1. Install plenum cable in environmental air spaces, including plenum ceilings.
   2. Comply with requirements for raceways and boxes specified in Section 27028 and Division 26.

C. Wiring Method: Conceal conductors and cables in accessible ceilings, walls, and floors where possible.

D. Wiring within Enclosures: Bundle, lace, and train cables within enclosures. Connect to terminal points with no excess and without exceeding manufacturer's limitations on bending radii. Provide and use lacing bars and distribution spools.

3.4 INSTALLATION OF PATHWAYS

A. Cable Trays:
   1. Comply with NEMA VE 2 and TIA-569-A.
   2. All cables installed in cable trays shall be plenum-rated.

B. Comply with requirements for demarcation point, pathways, cabinets, and racks specified in Section 271100 "Communications Equipment Room Fittings." Drawings indicate general arrangement of pathways and fittings.

C. Comply with TIA-569-D for pull-box sizing and length of conduit and number of bends between pull points.

D. Install manufactured conduit sweeps and long-radius elbows whenever possible.

E. Pathway Installation in Communications Equipment Rooms:
   1. Secure conduits to backboard when entering room from overhead.
   2. Extend conduits 4 inches above finished floor.
   3. Install metal conduits with grounding bushings and connect with grounding conductor to grounding system.

F. Backboards: Install backboards with 96-inch dimension vertical. Butt adjacent sheets tightly and form smooth gap-free corners and joints.

G. Install wire in raceway after interior of building has been physically protected from the weather and all mechanical work likely to injure conductors has been completed.

H. Completely and thoroughly swab raceway system before installing conductors.

I. Conductors shall not be pulled in concrete encased conduits before concrete is placed.

3.5 INSTALLATION OF CABLES

A. Comply with NECA 1.

B. Provide protection for exposed cables where subject to damage.

C. Use suitable cable fittings and connectors.

D. All cable shall be racked and supported in manholes.

E. Pulling winches and other necessary pulling equipment shall be of adequate capacity to ensure a continuous pull on the cable. Strain gages shall be used to monitor the cable pulling tension.

F. Cable and Wire pulling lubricants that are non-corrosive and harmless to hands and clothes shall be used. Lubricants shall be compatible with cable jackets and insulation.

G. General Requirements for Cabling:
1. Comply with TIA-568,.1-D.
2. Comply with BICSI ITSIM, Ch. 6, "Cable Termination Practices."
3. Install 110-style IDC termination hardware unless otherwise indicated.
4. Terminate all conductors; no cable shall contain unterminated elements. Make terminations only at indicated outlets, terminals, cross-connects, and patch panels.
5. Cables may not be spliced except at locations noted on the contract drawings.
6. Secure and support cables at intervals not exceeding 30 inches and not more than 6 inches from cabinets, boxes, fittings, outlets, racks, frames, and terminals.
7. Install lacing bars to restrain cables, to prevent straining connections, and to prevent bending cables to smaller radii than minimums recommended by manufacturer.
8. Bundle, lace, and train conductors to terminal points without exceeding manufacturer's limitations on bending radii, but not less than radii specified in BICSI ITSIM, "Cabling Termination Practices" Chapter. Use lacing bars and distribution spools.
9. Do not install bruised, kinked, scored, deformed, or abraded cable. Do not splice cable between termination, tap, or junction points. Remove and discard cable if damaged during installation and replace it with new cable.
10. Cold-Weather Installation: Bring cable to room temperature before dereeling. Heat lamps shall not be used for heating.
11. In the communications equipment room, install a 10-foot- (3-m-) long service loop on each end of cable.
12. Pulling Cable: Comply with BICSI ITSIM, Ch. 4, "Pulling Cable." Monitor cable pull tensions.

H. UTP Cable Installation:
1. Comply with TIA-568.2-D.

2. Do not untwist UTP cables more than 1/2 inch from the point of termination to maintain cable geometry.

I. Optical Fiber Cable Installation:
1. Comply with TIA-568.3-D.
2. Cable may be terminated on connecting hardware that is rack or cabinet mounted.
3. Exterior fiber cables shall be OSP rated and tight buffered construction in all installations.
4. Interior fiber cables shall be tight buffered and subject to the same restrictions as copper cabling when installed in cable trays.

J. Open-Cable Installation:
1. Install cabling with horizontal and vertical cable guides in telecommunications spaces with terminating hardware and interconnection equipment.
2. Cable shall not be run through structural members or in contact with pipes, ducts, or other potentially damaging items.

K. Group connecting hardware for cables into separate logical fields.

L. Separation from EMI Sources:
1. Comply with BICSI TDMM and TIA-569-D recommendations for separating unshielded copper voice and data communication cable from potential EMI sources, including electrical power lines and equipment.
2. Separation between open communications cables or cables in nonmetallic raceways and unshielded power conductors and electrical equipment shall be as follows:
   a. Electrical Equipment Rating Less Than 2 kVA: A minimum of 5 inches.
   b. Electrical Equipment Rating between 2 and 5 kVA: A minimum of 12 inches.
   c. Electrical Equipment Rating More Than 5 kVA: A minimum of 24 inches.
3. Separation between communications cables in grounded metallic raceways and unshielded power lines or electrical equipment shall be as follows:
   a. Electrical Equipment Rating Less Than 2 kVA: A minimum of 2-1/2 inches.
   b. Electrical Equipment Rating between 2 and 5 kVA: A minimum of 6 inches.
   c. Electrical Equipment Rating More Than 5 kVA: A minimum of 12 inches.
4. Separation between communications cables in grounded metallic raceways and power lines and electrical equipment located in grounded metallic conduits or enclosures shall be as follows:
   a. Electrical Equipment Rating Less Than 2 kVA: No requirement.
   b. Electrical Equipment Rating between 2 and 5 kVA: A minimum of 3 inches.
   c. Electrical Equipment Rating More Than 5 kVA: A minimum of 6 inches.
5. Separation between Communications Cables and Electrical Motors and Transformers, 5 kVA or HP and Larger: A minimum of 48 inches.
6. Separation between Communications Cables and Fluorescent Fixtures: A minimum of 5 inches.

3.6 FIRESTOPPING

A. Comply with requirements in Section 078400 - Firestopping.

B. Comply with TIA-569-D, Annex A, "Firestopping."

C. Comply with BICSI TDMM, "Firestopping Systems" Article.

3.7 GROUNDING

A. Install grounding according to BICSI TDMM, "Grounding, Bonding, and Electrical Protection" Chapter.

B. Comply with TIA-607-C.

C. Locate grounding bus bar to minimize the length of bonding conductors. Fasten to wall allowing at least 2-inch clearance behind the grounding bus bar. Connect grounding bus bar with a minimum No. 4 AWG grounding electrode conductor from grounding bus bar to suitable electrical building ground.

D. Bond metallic equipment to the grounding bus bar, using not smaller than No. 6 AWG equipment grounding conductor.

3.8 IDENTIFICATION

A. Identify system components, wiring, and cabling using backbone and inter-building cable numbers as assigned by City IT.
   1. Color-code cross-connect fields and apply colors to voice and data service backboards, connections, covers, and labels.

B. Comply with requirements in Section 099000 - Painting and Coatings for painting backboards. For fire-resistant plywood, do not paint over manufacturer's label.

C. Paint and label colors for equipment identification shall comply with TIA-606-A for level of administration including optional identification requirements of this standard.

D. Comply with requirements in Section 271500 - Communications Horizontal Cabling for cable and asset management software as applicable.

E. Cabling Administration Drawings: Show building floor plans with cabling administration-point labeling. Identify labeling convention and show labels for telecommunications closets, backbone pathways and cables, terminal hardware and positions, horizontal cables, work areas and workstation terminal positions, grounding buses and pathways, and equipment grounding conductors.

F. Cable and Wire Identification:
   1. Label each cable within 4 inches of each termination and tap, where it is accessible in a cabinet or junction or outlet box, and elsewhere as indicated.
   2. Each wire connected to building-mounted devices is not required to be numbered at device if color of wire is consistent with associated wire connected and numbered within panel or cabinet.
   3. Label each terminal strip and screw terminal in each cabinet, rack, or panel.
      a. Individually number wiring conductors connected to terminal strips and identify each cable or wiring group being extended from a panel or cabinet to a building-mounted device with name and number of particular device as shown.
      b. Label each unit and field within distribution racks and frames.
   4. Identification within Connector Fields in Equipment Rooms and Wiring Closets: Label each connector and each discrete unit of cable-terminating and connecting hardware.

G. Labels shall be preprinted or computer-printed type with printing area and font color that contrasts with cable jacket color but still complies with requirements in TIA 606-A, for the following:
   1. Cables use flexible vinyl or polyester that flexes as cables are bent.

3.9 FIELD QUALITY CONTROL

A. Inspect wire and cable for physical damage and proper connection.

B. Torque conductor connections and terminations to manufacturer's recommended values.

C. Verify cables are colored coded and labeled according to contract documents.

D. Testing Agency: Engage a qualified testing agency to perform tests and inspections.

E. Perform tests and inspections.

F. Tests and Inspections:
   1. Visually inspect UTP and optical fiber jacket materials for NRTL certification markings. Inspect cabling terminations in communications equipment rooms for compliance with color-coding for pin assignments and inspect cabling connections for compliance with TIA-568.1-D.
   2. Visually inspect cable placement, cable termination, grounding and bonding, equipment and patch cords, and labeling of all components.
   3. Test UTP copper cabling for DC loop resistance, shorts, opens, intermittent faults, and polarity between conductors. Test operation of shorting bars in connection blocks. Test cables after termination but not cross-connection.
      a. Test instruments shall meet or exceed applicable requirements in TIA-568-B.2-D. Perform tests with a tester that complies with performance requirements in "Test Instruments (Normative)" Annex, complying with measurement accuracy specified in "Measurement Accuracy (Informative)" Annex. Use only test cords and adapters that are qualified by test equipment manufacturer for channel or link test configuration.

G. Optical Fiber Cable Tests:
   1. Test instruments shall meet or exceed applicable requirements in TIA-568.1-D. Use only test cords and adapters that are qualified by test equipment manufacturer for channel or link test configuration.
   2. Link End-to-End Attenuation Tests - Single Mode:
      a. Perform an optical loss test of each strand using an optical power meter and calibrated light source at both 1310nm and 1550nm..
      b. Perform an Optical Time Domain Reflectometer test from both ends of each fiber strand at both 1310nm and 1550nm.

H. Data for each measurement shall be documented. Data for submittals shall be printed in a summary report that is formatted similar to Table 10.1 in BICSI TDMM, or transferred from the instrument to the computer, saved as text files, and printed and submitted.

I. Remove and replace cabling where test results indicate that they do not comply with specified requirements.

J. End-to-end cabling will be considered defective if it does not pass tests and inspections.

K. Prepare test and inspection reports.

PART 4 MEASUREMENT

4.1 METHOD OF MEASUREMENT

A. Percent of work complete shall be the method for measuring progress.

PART 5 PAYMENT

5.1 METHOD OF PAYMENT

A. Percent of work complete based on the approved schedule of values.

END OF SECTION

SECTION 271500 - COMMUNICATIONS HORIZONTAL CABLING

PART 1 GENERAL

1.1 RELATED DOCUMENTS

A. Drawings and general provisions of the Contract, including General and Special Conditions and Division 01 Specification Sections, apply to this Section.

B. Refer to Low Voltage Responsibility Matrix provided on cover sheet of drawings for additional procurement and installation responsibilities.

1.2 SUMMARY

A. Section Includes:
   1. UTP cabling.
   2. 62.5/125-micrometer, optical fiber cabling.
   3. Coaxial cable.
   4. Multiuser telecommunications outlet assemblies.
   5. Cable connecting hardware, patch panels, and cross-connects.
   6. Telecommunications outlet/connectors.
   7. Cabling system identification products.
   8. Cable management system.

1.3 RELATED REQUIREMENTS:

A. Section 270528 - Pathways for Communications Systems for pathways.

B. Section 271300 - Communications Backbone Cabling for voice and data cabling associated with system panels and devices.

C. Alternates: Refer to Division 01 Section 012300 - Alternates for description of Work in this Section affected by alternates.

1.4 GENERAL DESCRIPTION

A. Horizontal wiring pathways include all types of raceway systems to support voice, data, LAN, CATV and fiber cabling.

1.5 HORIZONTAL WIRING PATHWAYS

A. Reference Section 270528 - Pathways for Communication Systems and Section 260536 - Cable Trays for Electrical Systems for pathways and cable trays for communication systems.

B. Horizontal wiring pathways consist of structures that conceal, protect, and support horizontal cables between the communications workstation outlet and the horizontal cross-connect in the serving telecommunications room, cabinet, or closet. Horizontal communications pathways are used to distribute and support horizontal cable and connecting hardware between the workstation outlet and the telecommunications closet. These pathways & spaces are the "container" for the horizontal cabling.

C. It is the responsibility of the Contractor to review all proposed Horizontal Distribution Systems design with the Owners Project Manager to ensure installation compliance:
   1. Compliance with ANSI/NFPA 70 Local, State, and Federal Codes.

2. Compliance with ANSI/TIA-568 and 569.

1.6 ELECTROMAGNETIC INTERFERENCE (EMI)

A. EMI causes severe problems with electronic equipment, telecommunications and data communications, avoidance of all potential sources or, electromagnetic interference must be a primary consideration when designing a horizontal distribution system. To avoid electromagnetic interference, all distribution pathways should provide clearances of at least:
   1. Four (4) ft. from large motors and/or transformers.
   2. One (1) ft. from conduit and cables used for electrical power distribution.
   3. Five (5) in. from fluorescent lighting

B. Note: Horizontal Distribution Pathways should cross perpendicular to fluorescent lighting and electrical power cables or conduits.

C. For additional clearance requirements, see ANSI-TIA-569 and ANSI/NFPA 70.

1.7 DEFINITIONS

A. BICSI: Building Industry Consulting Service International.

B. Consolidation Point: A location for interconnection between horizontal cables extending from building pathways and horizontal cables extending into furniture pathways.

C. Cross-Connect: A facility enabling the termination of cable elements and their interconnection or cross-connection.

D. EMI: Electromagnetic interference.

E. IDC: Insulation displacement connector.

F. LAN: Local area network.

G. Outlet/Connectors: A connecting device in the work area on which horizontal cable or outlet cable terminates.

H. UTP: Unshielded twisted pair.

1.8 ADMINISTRATIVE REQUIREMENTS

A. Coordinate layout and installation of telecommunications cabling with Owner's telecommunications and LAN equipment and service suppliers.

B. Coordinate telecommunications outlet/connector locations with location of power receptacles at each work area.

C. Provide a unique number adjacent to each telecommunications outlet on the drawings. Coordinate numbering schema with the Owners project manager. Numbers will be utilized in a schedule to define cabling requirements and services to be provided at each telecommunications outlet.

1.9 ACTION SUBMITTALS

A. Refer to Section 013300 - Submittal Requirements for submittal procedures.

B. Product Data: For each type of product submit a complete data sheet indicating physical properties and performance characteristics.

1. Include data substantiating that materials comply with requirements.

C. Shop Drawings:
   1. System Labeling Schedules: Electronic copy of labeling schedules, in software and format selected by Owner.
   2. System Labeling Schedules: Electronic copy of labeling schedules that are part of the cabling and asset identification system of the software.
   3. Cabling administration drawings and printouts.
   4. Wiring diagrams to show typical wiring schematics, including the following:
      a. Cross-connects.
      b. Patch panels.
      c. Patch cords.
   5. Cross-connects and patch panels. Detail mounting assemblies and show elevations and physical relationship between the installed components.

D. Samples: For workstation outlets, jacks, jack assemblies, in specified finish, one for each size and outlet configuration and faceplates for color selection and evaluation of technical features.

1.10 INFORMATIONAL SUBMITTALS

A. Qualification Data: For Installer, qualified layout technician, installation supervisor, and field inspector.

B. Source quality-control reports.

C. Field quality-control reports.

1.11 CLOSEOUT SUBMITTALS

A. Maintenance Data: For splices and connectors to include in maintenance manuals.

B. As-Built Plans: Submit complete as-built plans of all Work, including interface with other Work, in accordance with requirements as specified in Section 013300 "Submittal Procedures".

1.12 MAINTENANCE MATERIAL SUBMITTALS

A. Furnish extra materials that match products installed and that are packaged with protective covering for storage and identified with labels describing contents.
   1. Patch-Panel Units: One (1) of each type.
   2. Connecting Blocks: One (1) of each type.
   3. Device Plates: One (1) of each type.

1.13 PROJECT CONDITIONS

A. Verify that field measurements are as shown on Drawings.

B. Where wire and cable routing is not shown, and destination only is indicated, determine exact routing and lengths required by field verification.

1.14 DELIVERY, STORAGE, AND HANDLING

A. Test cables upon receipt at Project site.
   1. Test optical fiber cables to determine the continuity of the strand end to end. Use Optical Time Domain Reflectometer.

2. Test optical fiber cables while on reels. Use an optical time domain reflectometer from both ends to verify the cable length and locate cable defects, splices, and connector; including the loss value of each. Retain test data and include the record in maintenance data.
3. Test each pair of UTP cable for open and short circuits.

1.15 CONSTRUCTION WASTE MANAGEMENT

A. Construction waste shall be managed in accordance with provisions of Section 017419 - Construction Waste Management and Disposal. Documentation shall be submitted to satisfy the requirements of that Section.

PART 2 PRODUCTS

2.1 HORIZONTAL CABLING DESCRIPTION

A. Horizontal cable and its connecting hardware provide the means of transporting signals between the telecommunications outlet/connector and the horizontal cross-connect located in the communications equipment room. This cabling and its connecting hardware are called a "permanent link," a term that is used in the testing protocols.

B. Horizontal cabling shall contain no more than one transition point or consolidation point between the horizontal cross-connect and the telecommunications outlet/connector.

C. Bridged taps and splices shall not be installed in the horizontal cabling.

D. Splitters shall not be installed as part of the optical fiber cabling.

E. The maximum allowable horizontal cable length is 295 feet (90 m). This maximum allowable length does not include an allowance for the length of 16 feet (4.9 m) to the workstation equipment or in the horizontal cross-connect.
   1. LAN circuits exceeding 295 feet in length shall be provisioned with fiber optic cable and appropriate transceivers.
   2. All metal conductors shall be copper.
   3. All building wire and cable shall be installed in an approved raceway. Cabling installed in cable trays shall be plenum rated.

2.2 PERFORMANCE REQUIREMENTS

A. General Performance: Horizontal cabling system shall comply with transmission standards in TIA-568.1-D when tested according to test procedures of this standard.
   1. Surface-Burning Characteristics: Comply with ASTM E 84; testing by a qualified testing agency. Identify products with appropriate markings of applicable testing agency.
   2. Flame-Spread Index: 25 or less.
   3. Smoke-Developed Index: 50 or less.

B. Electrical Components, Devices, and Accessories: Listed and labeled as defined in NFPA 70, by a qualified testing agency, and marked for intended location and application.
   1. Grounding: Comply with TIA-607-C.

2.3 BACKBOARDS

A. Backboards: Plywood, AC grade, fire-retardant treated, 3/4 by 48 by 96 inches. Cover all walls in IDF rooms from floor level to a height of 96 inches. Paint with 2 coats of light gray fire-retardant

paint. Do not paint over fire-retardant stamp. Comply with requirements in Section 061000 - Rough Carpentry for plywood backing panels.

2.4 UTP CABLE

A. Manufacturers: Subject to compliance with requirements, provide products by one of the following:
   1. ADC.
   2. Belden Inc.
   3. Berk-Tek; a Nexans company.
   4. CommScope, Inc.
   5. Draka Cableteq USA.
   6. Genesis Cable Products; Honeywell International, Inc.
   7. Mohawk; a division of Belden Networking, Inc.
   8. Superior Essex Inc.
   9. SYSTIMAX Solutions; a CommScope, Inc. brand.
   10. 3M Communication Markets Division.
   11. Tyco Electronics Corporation; AMP Products.
   12. Panduit
   13. or approved equal.

B. Description: 100-ohm, four-pair UTP covered with a blue thermoplastic jacket – plenum rated.
   1. Comply with ICEA S-90-661 for mechanical properties.
   2. Comply with TIA-568.1-D for performance specifications.
   3. Comply with TIA-568.1-D, Category 6A.
   4. Listed and labeled by an NRTL acceptable to authorities having jurisdiction as complying with UL 444 and NFPA 70 for the following types:
      a. Communications, General Purpose: Type CM.
      b. Communications, Plenum Rated: Type CMP complying with NFPA 262.
      c. Communications, Riser Rated: Type CMR complying with UL 1666.
      d. Communications, Limited Purpose: Type CMX.
      e. Multipurpose: Type MP or MPG.
      f. Multipurpose, Plenum Rated: Type MPP complying with NFPA 262.
      g. Multipurpose, Riser Rated: Type MPR, complying with UL 1666.
      h. UTP cable used at outdoor underground installation shall be outdoor rated Category 6 for multi-pair with a filled core and overall polyethylene jacket.

2.5 UTP CABLE HARDWARE

A. Manufacturer Basis of Design: Panduit Mini-Com

B. General Requirements for Cable Connecting Hardware: Comply with TIA-568.2-D, IDC type, with modules designed for punch-down caps or tools. Cables shall be terminated with connecting hardware of same category or higher.
   1. Jacks and Jack Assemblies: Modular, color-coded, eight-position modular receptacle units with integral IDC-type terminals. Category 6 or 6A rated.
   2. Patch panels shall be 24 or 48 port as required. Minicom modular patch panels with strain relief bars.

C. Patch Cords: Factory-made, four-pair cables; terminated with eight-position modular plug at each end.

1. Patch cords shall have bend-relief-compliant boots and color-coded icons to ensure Category 6 or 6A performance. Patch cords shall have latch guards to protect against snagging.
2. Patch cords shall have color-coded boots for circuit identification.

2.6 OPTICAL FIBER CABLE

A. Manufacturers: Subject to compliance with requirements, provide products by one of the following:
   1. Belden Inc.
   2. Berk-Tek; a Nexans company.
   3. CommScope, Inc.
   4. Corning Cable Systems.
   5. CSI Technologies Inc.
   6. General Cable Technologies Corporation.
   7. Mohawk; a division of Belden Networking, Inc.
   8. Superior Essex Inc.
   9. SYSTIMAX Solutions; a CommScope, Inc. brand.
   10. 3M Communication Markets Division.
   11. Tyco Electronics Corporation; AMP Products.
   12. AFL – eABF Solutions

B. Description: Multimode, 50.0-micrometer (OM2), non-conductive tight buffer, optical fiber cable.
   1. Comply with ICEA S-83-596 for mechanical properties.
   2. Comply with TIA-568.3-D for performance specifications.
   3. Listed and labeled by an NRTL acceptable to authorities having jurisdiction as complying with UL 444, UL 1651, and NFPA 70 for the following types:
      a. General Purpose, Nonconductive: Type OFN or OFNG, or OFNR, OFNP.
      b. Plenum Rated, Nonconductive: Type OFNP, complying with NFPA 262.
      c. Riser Rated, Nonconductive: Type OFNR or OFNP, complying with UL 1666.
   4. Maximum Attenuation: 2.80 dB/km at 850 nm; 1.0 dB/km at 1300 nm.
   5. Minimum Modal Bandwidth: 160 MHz-km at 850 nm; 500 MHz-km at 1300 nm.

C. Jacket:
   1. Jacket Color: Orange for 50.0/125-micrometer (OM2) cable.
   2. Cable cordage jacket, fiber, unit, and group color shall be per TIA-598-C.
   3. Imprinted with fiber count, fiber type, and aggregate length at regular intervals not to exceed 40 inches.

2.7 OPTICAL FIBER CABLE HARDWARE

A. Manufacturer Basis of Design: Panduit Mini-Com:

B. Patch Cords: Factory-made, single or dual-fiber cables in 36-inch incremental lengths.

C. Cable Connecting Hardware:
   1. Comply with Optical Fiber Connector Intermate ability Standards (FOCIS) specifications of TIA-604. Comply with TIA-568.3-D.

D. Quick-connect, simplex and duplex, Type LC connectors. Insertion loss not more than 0.75 dB.

E. Fiber Optic Transceivers at IDF locations where required shall be card cage based 100-base-FX units with dual redundant power supplies. Transceivers at outlets shall be placed in a single unit

housing with external power supply. Remote transceivers shall be provided in a PoE or non-PoE configuration depending on the specific application. Transceivers by Transition Networks.:

1. Comply with Optical Fiber Connector Intermate ability Standards (FOCIS) specifications of TIA-604. Comply with TIA-568.3-D.

2.8 COAXIAL CABLE

A. Manufacturers: Subject to compliance with requirements, provide products by one of the following:
   1. Alpha Wire Company.
   2. Belden Inc.
   3. Coleman Cable, Inc.
   4. CommScope, Inc.
   5. Draka Cableteq USA.
   6. Panduit

B. Cable Characteristics: Broadband type, recommended by cable manufacturer specifically for broadband data transmission applications. Coaxial cable and accessories shall have 75-ohm nominal impedance with a return loss of 20 dB maximum from 7 to 860 MHz.

C. RG-11/U: NFPA 70, Type CATV.
   1. No. 14 AWG, solid, copper-covered steel conductor.
   2. Gas-injected, foam-PE insulation.
   3. Quad shielded with 100 percent aluminum polyester tape and 60 percent aluminum braid.
   4. Jacketed with sunlight-resistant, black PVC or PE.
   5. Suitable for outdoor installations in ambient temperatures ranging from minus 40 to plus 85 deg C.

D. RG-6/U: NFPA 70, Type CATV or CM. (RG-6 only used for runs under 150 feet)
   1. No. 16 AWG, solid, copper-covered steel conductor; gas-injected, foam-PE insulation.
   2. Quad shielded with 100 percent aluminum-foil shield and 60 percent aluminum braid.
   3. Jacketed with black PVC or PE.
   4. Suitable for indoor installations.

E. NFPA and UL compliance, listed and labeled by an NRTL acceptable to authorities having jurisdiction as complying with UL 1655 and with NFPA 70 "Radio and Television Equipment" and "Community Antenna Television and Radio Distribution" Articles. Types are as follows:
   1. CATV Cable: Type CATV.
   2. CATV Plenum Rated: Type CATVP, complying with NFPA 262.
   3. CATV Riser Rated: Type CATVR], complying with UL 1666.
   4. CATV Limited Rating: Type CATVX.

2.9 COAXIAL CABLE HARDWARE

A. Manufacturers: Subject to compliance with requirements, provide products by one of the following:
   1. Emerson Network Power Connectivity Solutions.
   2. Leviton Commercial Networks Division.
   3. Siemon Co. (The).
   4. Belden
   5. or approved equal.

B. Coaxial-Cable Connectors: Type F, 75 ohms.

2.10 TELECOMMUNICATIONS OUTLET/CONNECTORS

A. Jacks: 100-ohm, balanced, twisted-pair connector; four-pair, eight-position modular. Comply with TIA-568.1-D. Category 6A.

B. Workstation Outlets: Single or Dual plastic faceplate equipped with connector inserts as indicated on the drawings or schedule of outlets.
   1. Plastic Faceplate: High-impact plastic. Coordinate color with Section 262726 "Wiring Devices."
   2. Metal Faceplate: Stainless steel, complying with requirements in Section 262726 "Wiring Devices."
   3. For use with snap-in jacks accommodating any combination of UTP, optical fiber, and coaxial work area cords.
   4. Legend: Machine printed, in the field, using adhesive-tape label.
   5. Legend: Snap-in, clear-label covers and machine-printed paper inserts.

C. Manufacturers: Subject to compliance with requirements, provide products by one of the following:
   1. ADC.
   2. Belden Inc.
   3. Berk-Tek; a Nexans company.
   4. CommScope, Inc.
   5. Genesis Cable Products; Honeywell International, Inc.
   6. Mohawk; a division of Belden Networking, Inc.
   7. Superior Essex Inc.
   8. SYSTIMAX Solutions; a CommScope, Inc. brand.
   9. Tyco Electronics Corporation; AMP Products.
   10. Panduit (Basis of Design) – Executive series FP
   11. or approved equal.

2.11 GROUNDING

A. Comply with requirements in Section 260526 "Grounding and Bonding for Electrical Systems" for grounding conductors and connectors.

B. Comply with TIA-607-C.

C. Horizontal Pathways must be grounded and bonded in accordance with the requirements specified in ANSI/NFPA 70, except where other codes or local authorities impose more stringent requirements.

2.12 IDENTIFICATION PRODUCTS

A. Comply with TIA-606-C and UL 969 for labeling materials, including label stocks, laminating adhesives, and inks used by label printers.
   1. Standard schematic methods and procedures for labeling and managing horizontal pathways. Locate markings so that they are clearly visible after installation, and easily distinguishable from any markings that appear on individual components
   2. Electrical or telecommunications drawings produced as part of any tenant or facility design shall include labeling for each outlet location. Labeling shall include the room number, outlet

letter designator and outlet type. Please refer to the details that accompany this guideline for a complete listing of standard outlet types and their designations.

2.13 CABLE MANAGEMENT SYSTEM

A. Provide a spreadsheet list of all horizontal cabling in Microsoft Excel format suitable for importation into a cable management system. Data shall include outlet location by building and room, connected device type and other information as requested by City IT.

2.14 SOURCE QUALITY CONTROL

A. Testing Agency: Engage a qualified testing agency to evaluate cables.

B. Factory test UTP and optical fiber cables on reels according to TIA-568.1-D.

C. Factory test UTP cables according to TIA-568.2-D.

D. Factory test multimode optical fiber cables according to TIA-526-14-C and TIA-568.3-D.

E. Factory-sweep test coaxial cables at frequencies from 5 MHz to 1 GHz. Sweep test shall test the frequency response, or attenuation over frequency, of a cable by generating a voltage whose frequency is varied through the specified frequency range and graphing the results.

F. Cable will be considered defective if it does not pass tests and inspections.

G. Prepare test and inspection reports.

PART 3 EXECUTION

3.1 GENERAL

A. Coordinate Work with City IT Department and Owners Project Manager.

B. Coordinate Work with existing systems at the City.

3.2 ENTRANCE FACILITIES

A. Coordinate backbone cabling with the protectors and demarcation point provided by communications service provider.

3.3 WIRING METHODS

A. Verify cable pathways are open, continuous, and clear of debris before installing cables.

B. Install cables in pathways and cable trays except within consoles, cabinets, desks, and counters. Conceal pathways and cables except in unfinished spaces.
   1. Install plenum cable in environmental air spaces, including plenum ceilings.
   2. Comply with requirements in Section 270528 "Pathways for Communications Systems."

C. Conceal conductors and cables in accessible ceilings, walls, and floors where possible.

D. Wiring within Enclosures:
   1. Bundle, lace, and train conductors to terminal points with no excess and without exceeding manufacturer's limitations on bending radii.
   2. Install lacing bars and distribution spools.
   3. Install conductors parallel with or at right angles to sides and back of enclosure.

3.4 INSTALLATION OF CABLES

A. Comply with NECA 1.

B. General Requirements for Cabling:
   1. Comply with TIA-568.1-D.
   2. Comply with BICSI ITSIM, Ch. 6, "Cable Termination Practices."
   3. Install 110-style IDC termination hardware unless otherwise indicated.
   4. Terminate conductors; no cable shall contain unterminated elements. Make terminations only at indicated outlets, terminals, cross-connects, and patch panels.
   5. Cables may not be spliced. Secure and support cables at intervals not exceeding 30 inches and not more than 6 inches from cabinets, boxes, fittings, outlets, racks, frames, and terminals.
   6. Install lacing bars to restrain cables, to prevent straining connections, and to prevent bending cables to smaller radii than minimums recommended by manufacturer.
   7. Bundle, Velcro, and train conductors to terminal points without exceeding manufacturer's limitations on bending radii. Include horizontal and vertical cable managers at patch panel frames to neatly route jumpers.
   8. Do not install bruised, kinked, scored, deformed, or abraded cable. Do not splice cable between termination, tap, or junction points. Remove and discard cable if damaged during installation and replace it with new cable.
   9. Cold-Weather Installation: Bring cable to room temperature before de-reeling. Heat lamps shall not be used for heating.
   10. In the communications equipment room, service loops are not required on horizontal cable.
   11. Pulling Cable: Do not exceed manufacturer maximum pulling tension when installing cable.

C. UTP Cable Installation:
   1. Comply with TIA-568.2-D.
   2. Do not untwist UTP cables more than 1/2 inch from the point of termination to maintain cable geometry.

D. Optical Fiber Cable Installation:
   1. Comply with TIA-568.3-D.
   2. Cable may be terminated on connecting hardware that is rack or cabinet mounted.

E. Group connecting hardware for cables into separate logical fields.

F. Separation from EMI Sources:
   1. Comply with TIA-569-B for separating unshielded copper voice and data communication cable from potential EMI sources, including electrical power lines and equipment.
   2. Separation between open communications cables or cables in nonmetallic raceways and unshielded power conductors and electrical equipment shall be as follows:
      a. Electrical Equipment Rating Less Than 2 kVA: A minimum of 5 inches.
      b. Electrical Equipment Rating between 2 and 5 kVA: A minimum of 12 inches.
      c. Electrical Equipment Rating More Than 5 kVA: A minimum of 24 inches.
   3. Separation between communications cables in grounded metallic raceways and unshielded power lines or electrical equipment shall be as follows:
      a. Electrical Equipment Rating Less Than 2 kVA: A minimum of 2-1/2 inches.
      b. Electrical Equipment Rating between 2 and 5 kVA: A minimum of 6 inches.
      c. Electrical Equipment Rating More Than 5 kVA: A minimum of 12 inches.

4. Separation between communications cables in grounded metallic raceways and power lines and electrical equipment located in grounded metallic conduits or enclosures shall be as follows:
   a. Electrical Equipment Rating Less Than 2 kVA: No requirement.
   b. Electrical Equipment Rating between 2 and 5 kVA: A minimum of 3 inches.
   c. Electrical Equipment Rating More Than 5 kVA: A minimum of 6 inches.
5. Separation between Communications Cables and Electrical Motors and Transformers, 5 kVA or HP and Larger: A minimum of 48 inches.
   a. Separation between Communications Cables and Fluorescent Fixtures: A minimum of 5 inches.

3.5 FIRESTOPPING

A. Comply with requirements in Section 078400 - Firestopping.

B. Comply with TIA-569-D, Annex A, "Firestopping."

C. All horizontal pathways that penetrate fire-rated barriers must be firestopped in accordance with City standards and all applicable codes.

3.6 GROUNDING

A. Install grounding according to BICSI TDMM, "Grounding, Bonding, and Electrical Protection" Chapter.

B. Comply with TIA-607-C.

C. Locate grounding bus bar to minimize the length of bonding conductors. Fasten to wall allowing at least 2-inch clearance behind the grounding bus bar. Connect grounding bus bar with a minimum No. 4 AWG grounding electrode conductor from grounding bus bar to suitable electrical building ground.

D. Bond metallic equipment to the grounding bus bar, using not smaller than No. 6 AWG equipment grounding conductor.

3.7 IDENTIFICATION

A. Identify system components, wiring, and cabling complying with TIA-606-C.

B. Provide labeling at each communication outlet. Label shall consist of two lines of text; the first line of text shall be located above the outlet and the second line shall be located below the outlet. All outlet labels shall be self-adhesive, typewritten text, black lettering on white background and a minimum text height of 1/4".
   1. Top Label: Room number of originating IDF.
   2. Bottom Label: Unique, sequential device ID as assigned by Owners Project Manager.

C. Comply with requirements in Section 099000 - Painting and Coatings for painting backboards. For fire-resistant plywood, do not paint over manufacturer's label.

D. Paint and label colors for equipment identification shall comply with TIA-606

E. Cabling Administration Drawings: Show building floor plans with cabling administration-point labeling. Identify labeling convention and show labels for telecommunications closets, terminal hardware and positions, horizontal cables, work areas and workstation terminal positions,

grounding buses and pathways, and equipment grounding conductors. Follow convention of TIA-606-A. Furnish electronic record of all drawings, in software and format selected by Owner.

F. Cable and Wire Identification:
   1. Label each cable within 4 inches of each termination and tap, where it is accessible in a cabinet or junction or outlet box, and elsewhere as indicated.
   2. Each wire connected to building-mounted devices is not required to be numbered at device if color of wire is consistent with associated wire connected and numbered within panel or cabinet.
   3. Label each terminal strip and screw terminal in each cabinet, rack, or panel.
      a. Individually number wiring conductors connected to terminal strips and identify each cable or wiring group being extended from a panel or cabinet to a building-mounted device shall be identified with name and number of particular device as shown.
      b. Label each unit and field within distribution racks and frames.
   4. Identification within Connector Fields in Equipment Rooms and Wiring Closets: Label each connector and each discrete unit of cable-terminating and connecting hardware.
      a. Labels shall be preprinted or computer-printed type with printing area and font color that contrasts with cable jacket color but still complies with requirements in TIA-606-A.
      b. Cables use flexible vinyl or polyester that flex as cables are bent.

3.8 FIELD QUALITY CONTROL

A. General:
   1. Inspect wire and cable for physical damage and proper connections.
   2. Torque conductor connections and terminations to manufacturer's recommended values.
   3. Verify cables are colored coded and labeled according to contract documents.

B. Testing Agency: Engage a qualified testing agency to perform tests and inspections.

C. Manufacturer's Field Service: Engage a factory-authorized service representative to test and inspect components, assemblies, and equipment installations, including connections.

D. Perform the following tests and inspections:
   1. Visually inspect UTP and optical fiber cable jacket materials for NRTL certification markings. Inspect cabling terminations in communications equipment rooms for compliance with color-coding for pin assignments and inspect cabling connections for compliance with TIA-568.1-D.
   2. Visually confirm marking of outlets, cover plates, outlet/connectors, and patch panels.
   3. Visually inspect cable placement, cable termination, grounding and bonding, equipment, and patch cords, and labeling of all components.
   4. Test UTP backbone copper cabling for DC loop resistance, shorts, opens, intermittent faults, and polarity between conductors. Test cables after termination but not cross-connection.
      a. Test instruments shall meet or exceed applicable requirements in TIA-568.2-D. Perform tests with a tester that complies with performance requirements in "Test Instruments (Normative)" Annex, complying with measurement accuracy specified in "Measurement Accuracy (Informative)" Annex. Use only test cords and adapters that are qualified by test equipment manufacturer for channel or link test configuration. Test instruments shall be Fluke Versiv or approved equal.
   5. Optical Fiber Cable Tests:

a. Test instruments shall meet or exceed applicable requirements in TIA-568.1-D. Use only test cords and adapters that are qualified by test equipment manufacturer for channel or link test configuration.
b. Link End-to-End Attenuation Tests:
1) Horizontal multimode link measurements: Test at 850 or 1300 nm in 1 direction according to TIA-526-14-C, Method B, One Reference Jumper.
2) Attenuation test results for backbone links shall be less than 2.0 dB. Attenuation test results shall be less than that calculated according to equation in TIA-568.1-D.

6. UTP Performance Tests:
a. Test for each outlet. Perform the following tests according to TIA-568.1-D and TIA-568.2-D:
1) Wire map.
2) Length (physical vs. electrical, and length requirements).
3) Insertion loss.
4) Near-end crosstalk (NEXT) loss.
5) Power sum near-end crosstalk (PSNEXT) loss.
6) Equal-level far-end crosstalk (ELFEXT).
7) Power sum equal-level far-end crosstalk (PSELFEXT).
8) Return loss.
9) Propagation delay.
10) Delay skew.

7. Optical Fiber Cable Performance Tests: Perform optical fiber end-to-end link tests according to TIA-568.1-D and TIA-568.3-D.
a. Coaxial Cable Tests: Conduct tests according to Section 274133 "Master Antenna Television System."
b. Retain "Final Verification Tests" Subparagraph below if Owner intends to use Contractor in final testing after its personnel have assumed the operation of communications system.
c. Final Verification Tests: Perform verification tests for UTP and optical fiber systems after the complete communications cabling and workstation outlet/connectors are installed.

E. Document data for each measurement. Data for submittals shall be printed in a summary report that is formatted similar to Table 10.1 in BICSI TDMM, or transferred from the instrument to the computer, saved as text files, and printed and submitted.

F. End-to-end cabling will be considered defective if it does not pass tests and inspections.

G. Prepare test and inspection reports.

3.9 DEMONSTRATION

A. Train Owner's maintenance personnel in cable-plant management operations, including changing signal pathways for different workstations, rerouting signals in failed cables, and keeping records of cabling assignments and revisions when extending wiring to establish new workstation outlets

B. Schedule training with Owner, through Owners Project Manager, with at least seven (7) days notice.

PART 4 MEASUREMENT

4.1 METHOD OF MEASUREMENT

A. Percent of work complete shall be the method for measuring progress.

PART 5 PAYMENT

5.1 METHOD OF PAYMENT

A. Percent of work complete based on the approved schedule of values.

END OF SECTION

SECTION 272101 - PUBLIC WIRELESS LAN (WIFI)

PART 1 GENERAL

1.1 RELATED DOCUMENTS

A. Drawings and general provisions of the Contract, including General and Supplementary Conditions and Division 01 Specification Sections, apply to this Section.

1.2 SUMMARY

A. The Contractor shall provide a physically complete and fully functional extension of the Owners public wireless LAN system throughout all public areas of the project. This equipment shall fully integrate with the Owners wired network and with existing WIFI controllers. Provide all labor and products required for installation of the equipment. Programming shall be performed by Owner representatives. Test and checkout of the WIFI equipment shall be done jointly with the Contractor and Owner personnel. Coordinate all work by Owner staff through the Owners Project Manager.

B. Work Includes:
   1. WIFI Access Points.
   2. WIFI Antennas.
   3. Cabling from access points to network switches.
   4. Power Injectors for non-PoE switch connections.
   5. Access Point enclosures, access panels and other misc. hardware.

C. Provide system documentation, submittals, and warranty support.

D. Comply with codes, ordinances, regulations, and other legal requirements of public authorities that bear on installation and performance of Work.

E. The Work described in this section includes engineering, design, labor, materials, equipment, installation, and services necessary for physically complete and functional system. Materials, equipment, appurtenances, or labor not specifically mentioned in this specification, or not shown on the Contract Drawings, but required for proper installation, performance, and operation of the equipment or systems, shall be provided by the Contractor.

F. The Work shown in the Contract Drawings is diagrammatic in nature and the Contractor is responsible for determining the final equipment locations, arrangements, and installation to meet site-specific requirements.

G. As-Built Plans: Submit complete as-built plans of all Work, including interface with other Work, in accordance with requirements as specified in Section 013300 - Submittal Requirements.

H. Refer to Low Voltage Responsibility Matrix provided on cover sheet of drawings for additional procurement and installation responsibilities.

1.3 RELATED SECTIONS:

A. DIVISION 26.

B. Section 270526 - Grounding and Bonding for Telecommunications Systems.

C. Section 270528 - Pathways for Communications Systems.

D. Section 270544 - Sleeves and Sleeve Seals for Communications Pathways and Cabling.

E. Section 271100 - Communications Equipment Room Fittings.

F. Section 271500 - Communications Horizontal Cabling.

1.4 SCOPE OF WORK

A. The Contractor shall design and provide in-ceiling or above-ceiling enclosures for access points. Access points are not plenum rated. It is essential that the access points be readily accessible after installation for maintenance purposes.

B. Placement of access points throughout the facility shall be such that signal strength levels are no less than -67 dBm throughout the facility. The Contractor shall provide predictive modeling heat maps as part of design to Owner and Engineer for review as part of design approval process. Post installation heat maps shall be provided as well that indicate placement and signal strength levels of the installed system.

C. Ethernet communications between the access points and network access layer switches using a PoE Category 6 Ethernet connection at minimum. Two (2) CAT6 cables per access point will be pulled to each access point location. Three Access Points will be installed per location where location services are required.

D. Once access points are installed and connected to the WIFI network, the Owner will configure the access points to work with the existing WIFI controllers. Owner ITwill provide an IP address, subnet mask and default gateway address for each access point. These must be configured on the access points prior to their installation.

E. Use of radio frequency modeling software and tools shall be used to verify design and installation such that required minimum signal strength levels are achieved for work under this Section.

1.5 REFERENCE STANDARDS

A. General: The latest version of the following codes and standards shall be applicable:
   1. Code of Federal Regulations (CFR).
   2. 47 CFR 15 et seq.: Radio Frequency Devices.
   3. Institute of Electrical and Electronics Engineers (IEEE):
      a. IEEE C2: National Electrical Safety Code.
      b. IEEE 142: IEEE Recommended Practice for Grounding of Industrial and Commercial Power Systems.
      c. IEEE C62.41-1991: Recommended Practice on Surge Voltages in Low-Voltage AC Power Circuits.
      d. IEEE 802.3: Information Technology - Local and Metropolitan Area Networks - Part 3; Carrier Sense with Collision Detection (CSMA/CD) Access Methods and Physical Layer Specification.
      e. IEEE 802.3u: Carrier Sense Multiple Access with Collision Detection (CSMA/CD) Access Method & Physical Layer Specifications: Mac Parameters, Physical Layer, Medium Attachment Units, and Repeater for 100 Mb/s Operation.
      f. IEEE 802.3x: Supplement to Carrier Sense Multiple Access with Collision Detection (CSMA/CD) Access Method & Physical Layer Specifications: Specification for 802.3 Full Duplex Operation Detection (CSMA/CD) Access Method & Physical Layer Specifications:
         1) Specification for 802.3 Full Duplex Operation.

4. National Fire Protection Association (NFPA):
   a. NFPA 70: National Electrical Code (NEC).
5. Telecommunications Industry Association (TIA):
   a. EIA-170: Electrical Performance Standards - Monochrome Television Studio Facilities.
   b. EIA-310-D: Cabinets, Racks, Panels, and Associated Equipment
   c. TIA-568-B: Commercial Building Telecommunications Cabling Standard.
   d. TIA-568.3-D

1.6 ACTION SUBMITTALS

A. General: Comply with requirements of Section 013300 - Submittal Requirements.

B. Product Data: For each type of product.
   1. Submit catalog cut sheets, technical data sheets, manufacturer's specifications and/or diagrams necessary to illustrate a product, material, or system for some portion of the work. Product data literature is required on all items of material and equipment and should be clearly marked; identifying specific items proposed with a reference to the specification requirement(s) the item is being submitted for.
   2. Product data shall include adequate descriptive literature and catalog cut sheets required for the Engineer to ascertain that the proposed equipment and materials comply with Specifications requirements.
   3. Include data substantiating that materials comply with requirements.

C. Shop Drawings:
   1. The shop drawings shall be approved by the Engineer and Owner PM prior to system installation.
   2. Floor plans detailing all devices, conduit and raceway systems.
   3. Equipment room layouts to scale including equipment cabinet elevations.
   4. Point-to-point wiring diagrams.
   5. Heat maps, showing signal strength throughout proposed installation, as described in Scope of Work above.

1.7 INFORMATIONAL SUBMITTALS

A. Qualification Data: For installer.

B. Field quality-control reports.

1.8 CLOSEOUT SUBMITTALS

A. Operation and Maintenance Data: For public wireless LAN (WIFI) systems to include in emergency, operation, and maintenance manuals.
   1. Include operating instructions, and maintenance and repair procedures. Procedures shall include shop manuals and schematic drawings to allow repair of equipment.

B. As-Built Plans: Submit complete as-built plans of all Work, including interface with other Work, in accordance with requirements as specified in Section 013300 "Submittal Procedures".
   1. Contractor shall maintain on site accurate as-built drawings indicating dimensioned locations of constructed raceway, box, and device locations. Any modifications to work depicted on the Engineered shop drawings shall be noted. Documents shall be updated daily and shall always be available for Owner and Engineer review.

1.9 MAINTENANCE MATERIAL SUBMITTALS

A. Furnish extra materials that match products installed and that are packaged with protective covering for storage and identified with labels describing contents.

1.10 QUALITY ASSURANCE

A. Contractor shall be fully responsible for daily quality control of all system installation, coordination with trades, and coordination with Owner Maintenance and Engineering.

1.11 DELIVERY, STORAGE, AND HANDLING

A. Deliver products to site under provisions of Division 1.

B. Store and protect products under provisions of Division 1.

1.12 WARRANTY

A. All components, parts and assemblies provided by the Contractor shall be guaranteed against defects in materials and workmanship for a period of 24 months following acceptance. Submit warranty per Division 1 requirements.

B. Warranty service shall be provided by a trained specialist of the equipment manufacturer, who shall be based in a fully staffed, fully stocked (replacement parts and test equipment) office, located within 50 miles of the site.

1.13 CONSTRUCTION WASTE MANAGEMENT

A. Construction waste shall be managed in accordance with provisions of Section 017419 - Construction Waste Management and Disposal. Documentation shall be submitted to satisfy the requirements of that Section.

PART 2 PRODUCTS

2.1 GENERAL

A. Verify with Owner to confirm that the listed part numbers are still current prior to purchase.

2.2 MANUFACTURERS

A. Manufacturers: Subject to compliance with requirements, provide products by the following:
   1. WIFI Access Points and antennas:
      a. Cisco Lightweight Access Point.
   2. Wall Mount
      a. Cisco APC9120AXE – mounting bracket included
      b. Antenna - AccelTex ATS-OP-245-47-4RPTP-36
   3. Ceiling Mount
      a. Cisco APC9120AXE – Internal antenna model
   4. Outdoor Mount
      a. For outdoor installations, All RF connections that are exposed shall be sealed with outdoor rated weatherproofing.
      b. Surge arrestors are not required for the outdoor installations.
         1) Physical location installation
            a) Parapet wall

b) Enclosure AccelTex ATS-181610P-S-K-NH-BBP
2) WIFI Hardware
a) Cisco APC9120AXE – Mounting bracket included
b) 1 each antenna, AccelTex ATS-OHDP-245-1011-4NJ-IC
c) 4 each internal jumper cables, AccelTex ATS-100-RPTNCBHJ-RPTNCP-18in
d) 4 each external jumper cables, AccelTex ATS-240-RANP-RPTNCP-5ft

5. Substitutions:
a. Substitution on WIFI equipment is not permitted, as these devices must connect to existing Owner Wireless LAN Controllers.
b. Designers are required to meet with Owner IT staff during the design phase of the Project to coordinate equipment types.
6. Source Limitations: Obtain public wireless LAN (WIFI) system from single source from single manufacturer.
7. Electrical Components, Devices, and Accessories: Listed and labeled as defined in NFPA 70, by a qualified testing agency, and marked for intended location and application.
8. Comply with NFPA 70.

PART 3 EXECUTION

3.1 GENERAL

A. The Work shall be performed by skilled technicians under the direction of experienced engineers, all of whom shall be properly factory trained and qualified for this Work.

B. Programming of the system WIFI controllers shall be performed by Owner IT.

C. Raceways: Raceways shall be installed in accordance with Division 26 and as augmented by applicable Division 27 sections.

3.2 FIELD QUALITY CONTROL

A. Testing and Reports:
1. The Contractor shall provide all personnel, equipment, instrumentation, and supplies necessary to perform all testing.
2. Design Engineer and Owner representatives will witness all field tests.
3. When installation is complete, the system shall be tested by the Contractor and Owner representatives. A representative of the installing Contractor shall submit a written report of the findings to the Owners Project Manager.
4. Report shall consist of a complete listing of every device and feature, the date it was tested and by whom, the results, and the date retested (if failure occurred during any previous tests). The final test reports shall indicate that every device tested successfully.
5. Submit two (2) typed copies of the test reports in a neatly bound folder to the Owner's Representative for approval.
6. Also submit electronic copies of test reports in pdf format.
7. Failure to comply will result in a delay of final testing and acceptance.

B. The field testing shall as a minimum include:
1. Verification that the data transmission media and any signal or control cabling has been installed, tested, and approved.

2. Verification that the new equipment is fully functional and that all other ancillary equipment is functioning properly.

3.3 STARTUP SERVICE

A. Engage a factory-authorized service representative to assist Contractor and perform startup service.
   1. Verify that electrical wiring installation complies with manufacturer's submittal and installation requirements.
   2. Complete installation and startup checks according to manufacturer's written instructions.

3.4 DEMONSTRATION

A. Engage a factory-authorized service representative to assist Contractor and train Owner's maintenance personnel to adjust, operate, and maintain the public wireless LAN (WIFI) system and equipment.
   1. Schedule training with Owner, through Owners Project Manager, with at least seven (7) days advance notice.

PART 4 MEASUREMENT

4.1 METHOD OF MEASUREMENT

A. Percent of work complete shall be the method for measuring progress.

PART 5 PAYMENT

5.1 METHOD OF PAYMENT

A. Percent of work complete based on the approved schedule of values.

END OF SECTION

SECTION 274116 - AUDIO-VISUAL SYSTEMS

PART 1:GENERAL

1.1 RELATED DOCUMENTS

A. Drawings and general provisions of the Contract, including General and Supplementary Conditions and Division 01 Specification Sections, apply to this Section.

1.2 RELATED SECTIONS

A. Section 271500 – Communications Horizontal Cabling

Section 260533 - Raceway and Boxes for Electrical Systems

1.3 SCOPE

A. This Section includes:
   1. Provision and installation of a projector and mount.
   2. Provision and installation of associated cabling system.
   3. Provision and installation of coaxial cable, extending existing Direct TV system.
   4. Provision of all required patch cables to supply a functional A/V system.
   5. Provision and installation of televisions.

1.4 SUBMITTALS

A. Refer to Section 013300 - Submittal Requirements for submittal procedures.

B. Shop Drawings shall be submitted for approval for Audio/Visual systems prior to commencing installation.
   1. Provide a complete materials list, listing quantity, manufacturer, model number and description of the items listed below.
   2. Provide a manufacturer's specification sheet for all of the components of the items listed below.

C. Products:
   1. Projector and mounting system
   2. HDMI connectors
   3. USB connectors
   4. F Connectors
   5. Interconnect cables
   6. Coaxial cable
   7. Televisions

D. Provide systems diagrams to show installation security measures. The secure installation shall meet Owner's approval prior to installation.

E. Provide system diagram showing extension of existing Direct TV system to TVs and Projectors.

F. Provide samples of any or all proposed system components requested for examination/approval.

G. As-Built Documents shall be submitted to the Technology Designer for approval for all cabling components.
   1. Coordinate with existing shop drawings to indicate changes executed during construction.

2. Manufacturer's required maintenance related to system warranty requirements
3. Record of warranty
4. Test results

1.5 QUALITY ASSURANCE

A. Contractor Qualifications:
   1. Vendor shall have five or more years of experience in audio/visual systems installation.
   2. Vendor shall have a local support center that stocks standard parts typically required for troubleshooting and repair of systems.
   3. Vendor shall attend each weekly construction meeting and perform extensive survey of existing site conditions.

B. Provide, upon request, Contractor information as follows:
   1. Period of time Contractor has installed similar systems.
   2. List of all similar systems installed locally within the last five years, indicating the following:
      a. When system was installed.
      b. Name and telephone number of reference person for each system.
   3. Description of installation capabilities, indicating the following:
      a. Number of local technicians trained to provide installations meeting the product manufacturer's requirements for installation.
      b. Length of time every technician has been employed in the audio/visual business.
      c. Length of time every technician has been employed by the Company.

1.6 PROTECTION

A. Until final acceptance of work, Contractor shall protect all materials and equipment from damage.
   1. Any components stored or installed on-site shall be protected with a minimum polyethylene or equivalent covering to protect from moisture, plaster, cement, paint, or other work of other trades.
   2. If during shipment or installation, finish or equipment becomes chipped or scratched, Contractor shall touch up or refinish surfaces to match original finish.
   3. Contractor is responsible to protect Owner's furnishings from damage due to their activities in occupied spaces and to clean up any debris created as a result of their work.

1.7 WARRANTY

A. The Contractor shall guarantee all A/V Classroom materials and equipment for a minimum of one (1) year from date of substantial completion of this work. This guarantee shall include all labor, material, and travel time.

B. Manufacturer's 1 Year Warranty for A/V system shall cover:
   1. Product defects.
   2. Failure of the installed audio/visual wiring system to support the application which it was designed to support, as well as additional application(s) introduced in the future by recognized standards or user forums for cabling.

C. Manufacturer's 2 Year Warranty for Projector shall cover:
   1. Epson Road Service Program
   2. Private Line dedicated toll-free support
   3. 90-day lamp warranty

4. Contractor shall provide in the As-Built documents the numbered certificate from the manufacturing company showing registration of the installation.

PART 2:PRODUCTS

2.1 GENERAL INFORMATION.

A. A. All electrical equipment and material shall be new and bear a recognized testing laboratory's label, where applicable. The type of equipment and/or material shall be designated by the location where it will be installed and so defined by NEMA / NFPA 70 and NECA/BICSI/TIA standards.

2.2 PROJECTOR:

A. Manufacturer:
   1. Epson

B. Description:
   1. Interactive Ultra-short-throw
   2. Inputs:
      a. 2 HDMI
      b. Audio In
      c. USB Type B
      d. USB Type A
      e. Network card
   3. WXGA resolution (1280 x 800)
   4. 3300 lumens
   5. Capable of delivering Direct TV
   6. Model: 585Wi
   7. Quantity: 2

2.3 TELEVISION:

A. Manufacturer:
   1. LG or approved equal.

B. Description:
   1. Diagonal Class: 60 inches
   2. Resolution: Minimum of 3840 x 2160
   3. Display Type: LED
   4. HDMI Ports: Minimum of 2
   5. USB Ports: Minimum of 1
   6. RF Inputs: Minimum of 1
   7. Ethernet: Minimum of 1
   8. Operating System: webOS 3.0
   9. Speaker System: 2.0 Channel

2.4 CONNECTIVITY:

A. Manufacturer:
   1. CommScope.

B. Description:
   1. HDMI:
      a. SL Series HDMI Coupler Insert
      b. Approved Manufacturer: CommScope
      c. Part Number: 2111500-2
   2. USB:
      a. SL Series USB A to USB A Coupler Insert
      b. Approved Manufacturer: CommScope
      c. Part Number: 1933659-2
   3. F-Connector:
      a. Coaxial Coupler
      b. Approved Manufacturer: CommScope
      c. Part Series: M81-C
      d. With black insert

2.5 COAXIAL CABLE:

A. Manufacturer:
   1. _____

B. Description:
   1. RG-6.
   2. 50% Braided – quad shield is not acceptable.
   3. Plenum rated.
   4. 3 GHz frequency.
   5. Cable transmission performance indicated on cable outer jacket.
   6. Cable shall be factory tested.
   7. Color shall be black.
   8. Use for typical TV Outlets.

PART 3 EXECUTION

3.1 GENERAL INSTALLATION

A. Common work for communication systems shall be installed in a neat and workmanlike manner. The NEIS Standard Practices for Good Workmanship in Electrical Contracting NECA 1-2006 and ANSI/NECA/BICSI 568-2006, Standard for Installing Commercial Building Telecommunications Cabling latest edition is hereby adopted to define such workmanship and the installation of communications horizontal cabling.

3.2 EXAMINATION

A. Receive, inspect, handle, and store all products according to NEMA PB 2.1.

B. Examine products before installation. Reject products that are moisture damaged or physically damaged.

C. Examine elements and surfaces for compliance with installation tolerances and other conditions affecting performance of the Work.

D. Proceed with installation only after unsatisfactory conditions have been corrected.

3.3 INSTALLATION

A. Ultra Short Throw Projector Installation:
   1. Properly and securely install mounting bracket per manufacturer's recommendations and directions and in accordance to Owner's approval. Aspect ratio shall be 16:10 with a diagonal measurement of 100".
   2. Use tamper resistant screws.
   3. Install the short throw projector on newly installed mount according to the proper aspect ratio setting. Allow for the offset between the center of the wallplate and the center of the image area.
   4. Install all patch cables. All cabling shall be secure and placed behind locked cabinet doors.
   5. Adjust the image of the projector per manufacturer's recommendations and directions. Set to the appropriate aspect ratio. Adjust the focus.
      a. Test system for performance to Architect and Owner's approval

3.4 ADJUSTING

A. Occupancy Adjustments: When requested within 12 months of date of Substantial Completion, provide on-site assistance in adjusting system to suit actual occupied conditions and to optimize performance of the installed equipment. Tasks shall include, but are not limited to, the following:
   1. Check cable connections.
   2. Check proper operation of projectors.
   3. Check security of installation.
   4. Provide a written report of adjustments and recommendations.

3.5 CLEANING

A. Provide final cleaning, protection, and maintain conditions in a manner acceptable to manufacturer, which ensures system being free from damage and deterioration at time of Substantial Completion.

B. Clean equipment components.

C. Remove debris from installation site and clear surfaces soiled during construction.

3.6 FIELD QUALITY CONTROL

A. Perform tests and inspections.

B. Remove and replace cabling where test results indicate that they do not comply with specified requirements.

C. Prepare test and inspection reports and included in operation, maintenance and warranty data manuals.

3.7 DEMONSTRATION

A. Train Owner's IT personnel to operate the short throw projector. Training shall be performed by factory trained personnel qualified to instruct.

B. Owner will designate personnel to be trained.

C. Provide printed training materials for each trainee.

D. Provide hands-on training with operational equipment.

E. Training shall be oriented to the specific system being installed under this Contract as designed and specified.

F. All training shall be coordinated through the Director of Technology to ensure that all necessary personnel are in attendance at each training session.

G. The personnel responsible for training shall be trained by the manufacturer of the equipment and be familiar with all of the features of the system.

H. Contractor shall have a sign-up sheet for each training session to keep a record of attendees, time, and date. Contractor shall provide a copy of this sign-up sheet to the Owner.

I. Provide a minimum of 1 hour on-site, in-service training in the operation of the system.

END OF SECTION

SECTION 274133 - MASTER ANTENNA TELEVISION SYSTEM

PART 1 - GENERAL

1.1 RELATED DOCUMENTS

A. Drawings and general provisions of the Contract, including General and Special Conditions and Division 01 Specification Sections, apply to this Section.

B. Refer to Low Voltage Responsibility Matrix provided on cover sheet of drawings for additional procurement and installation responsibilities.

1.2 SUMMARY

A. Section Includes:

B. Headend Description.

C. Optical Distribution.

D. IDF Room Nodes.

E. RF Distribution

1.3 RELATED SECTIONS:

A. Section 271300 - Communications Backbone Cabling for coaxial, UTP, and fiber-optic cables and connectors.

B. Section 271500 - Communications Horizontal Cabling for coaxial, UTP, and fiber-optic cables and connectors.

C. Alternates: Refer to Section 012300 - Alternates for description of Work in this Section affected by alternates.

1.4 DEFINITIONS

A. dBm: Decibels relative to one milliqatt (optical).

B. dBmV: Decibels relative to 1 mV across 75 ohms. Zero dBmV is defined as 1 mV across 75 ohms. dBmV = 20 log 10(V1/V2) where V1 is the measurement of voltage at a point having identical impedance to V2 (0.001 V across 75 ohms).

C. EDFA: Erbium Doped Fiber Amplifier.

D. Headend: The central equipment for the City CATV/MATV system, where incoming signals are amplified, converted, processed, and combined into a common cable along with any locally originated television signals, for transmission to user-interface points.

E. L-Band: Frequencies down-converted at satellite antennas and fed to satellite receivers.

F. MHz: Megahertz.

G. Nm: Nanometers (wavelength of light).

H. Optical Node: An appliance, generally located in IDF rooms that accepts an optical input from the City TV Headend and provides a broadband radio frequency output to feed television receivers.

I. QAM: Quadrature Amplitude Modulation (Cable TV Signal Format).

1.5 SYSTEM DESCRIPTION

A. The City TV system is fed from Dish Network equipment and is a bulk, standard definition channel lineup to serve City spaces such as conference rooms, break rooms and private offices.
   1. The headend for the system utilizes an optical transmitter that accepts the 50-860 mHz radio frequency output from the Dish Network.equipment and from modulators that support locally originated channels. Operating wavelength from the transmitter is 1550nm.
   2. Two Erbium Doped Fiber Amplifiers (EDFA) are used at the headend to amplify the forward television signal. Each EDFA provides eight (8) optical outputs at +21dBm.
   3. Outputs from the EDFA amplifiers are routed over APC terminated single mode fiber strands to 1 x 16 optical dividing networks located at the center core of each concourse, east and west side of the terminal and at other locations throughout the campus. These dividing networks attenuate the optical signal by 14.3 dB providing outputs for up to sixteen (16) optical nodes.
   4. IDF rooms shall be provided with optical nodes that accept an optical signal from the dividing networks. Optical input level for the nodes shall be attenuated to a level of 0dBm using a male-to-female fixed optical attenuator. The nodes will display a green LED bar on the center of the built-in optical power meter with red bars for power levels above and below 0dBm. Nodes are reverse path capable.
   5. Gain and slope controls on the optical nodes shall be adjusted to provide a sloped output of +37dBmV at 54mHz and 45dBmV at 860mHz.
   6. Optical nodes shall be connected through an 8dB fixed attenuator to the input of a sixteen-way splitter. At locations requiring more than sixteen coaxial drops the 8dB attenuator shall be replaced with a four-way splitter (also 8dB loss) which in turn feeds up to four sixteen-way splitters.
   7. Coaxial cable drops from the IDF splitters shall be either Quad shielded RG-6 (Circuit type TV06) or RG-11 (Circuit type TV11) depending on drop length. Tamper resistant 75-ohm terminators shall be installed on all unused splitter ports.

B. Hardware Requirements: Optical dividing networks shall be one rack unit high and installed in existing 19-inch EIA racks at fiber aggregation points for each facility. IDF room optical nodes and spitters shall be wall mounted to plywood walls in the IDF room.

1.6 PERFORMANCE REQUIREMENTS

A. Minimum acceptable performance of distribution system at all user-interface points shall be as follows:

B. RF Video-Carrier Level: Between 3 and 12 dBmV.

C. Relative Video-Carrier Level: Within 3 dB to adjacent channel.

D. Carrier Level Stability, Short Term: Level shall not change more than 0.5 dB during a 60-minute period.

E. Carrier Level Stability, Long Term: Level shall not change more than 2 dB during a 24-hour period.

F. Channel Frequency Response: Across any 6-MHz channel in the 54- to 860-MHz frequency range, referenced to video; signal amplitude shall be plus or minus 1 dB, maximum.

G. Carrier-to-Noise Ratio: 45 dB or more.

H. RF Visual Signal-to-Noise Ratio: 43 dB or more.

I. Antenna Combiner Insertion Loss: 40 dB maximum.

J. Signal Power Splitter and Isolation Tap Return Loss: 17 dB maximum.

K. Cable Connectors Attenuation: Less than 0.1 dB.

L. Cross Modulation: Less than minus 50 dB.

M. Carrier-to-Echo Ratio: More than 40 dB.

N. Composite Triple Beat: Less than minus 53 dB.

1.7 SECOND ORDER BEAT: LESS THAN MINUS 60 DB.

A. Terminal Isolation from Television to Television: 25 dB, minimum.

B. Terminal Isolation between Television and FM: 35 dB, minimum.

C. Hum Modulation: 2 percent, maximum.

1.8 ACTION SUBMITTALS

A. Product Data: For each type of product indicated.
   1. Include data substantiating that materials comply with requirements.

B. Shop Drawings: For headend and distribution system. Include plans, elevations, sections, details, and attachments to other work.
   1. Show fabrication and installation details for television equipment.
   2. Functional Block Diagram: Show single-line interconnections between components for headend and distribution system to user-interface points. Show cable types and sizes.
   3. Samples: Full size for each outlet device plate in required colors and textures.
   4. Design Calculations: Calculate signal attenuation budget and show calculated line and equipment losses for the system based on the functional block diagram, to show that proposed system layout can be expected to perform up to specification.

1.9 INFORMATIONAL SUBMITTALS

A. Coordination Drawings: Include dimensioned plan and elevation views of components and enclosures. Show access and workspace requirements.

B. Equipment List: Include each piece of equipment and include model number, manufacturer, serial number, location, and date of original installation. Insert testing record of each piece of adjustable equipment, listing name of person testing, date of test, and description of as-left set points.

C. Field quality-control reports.

1.10 CLOSEOUT SUBMITTALS

A. Operation and Maintenance Data: For headend and distribution system to include in emergency, operation, and maintenance manuals.

B. As-Built Plans: Submit complete as-built plans of all Work, including interface with other Work, in accordance with requirements as specified in Section 013300 "Submittal Procedures".

1.11 QUALITY ASSURANCE

A. Electrical Components, Devices, and Accessories: Listed and labeled as defined in NFPA 70, by a qualified testing agency, and marked for intended location and application.

1.12 PROJECT CONDITIONS

A. Environmental Limitations: System components shall be equipped and rated for the environments in which they are installed.

B. Environmental Conditions: Capable of withstanding the following environmental conditions without mechanical or electrical damage or degradation of operating capability:

C. Interior, Controlled Environment: System components, except central-station control unit, installed in interior environments shall be rated for continuous operation in ambient conditions of 36 to 122 deg F (2 to 50 deg C) dry bulb and 20 to 90 percent relative humidity, noncondensing.

D. Interior, Uncontrolled Environment: System components installed in non- interior environments shall be rated for continuous operation in ambient conditions of 0 to 122 deg F (minus 18 to plus 50 deg C) dry bulb and 20 to 90 percent relative humidity, noncondensing.

E. Exterior Environment: System components installed in locations exposed to weather shall be rated for continuous operation in ambient conditions of minus 30 to plus 122 deg F (minus 34 to plus 50 deg C) dry bulb and 20 to 90 percent relative humidity, condensing. Rate for continuous operation when exposed to rain as specified in NEMA 250, winds up to 115 mph with gust factor of 1.3, and snow cover up to 24 inches (610 mm) thick.

F. Altitude: 5,500 feet (1677 m) above sea level.

1.13 COORDINATION

A. Coordinate size and location of raceway system and provisions for electrical power to equipment specified in this Section.

B. Coordinate all work with existing City Systems.

1.14 MAINTENANCE SERVICE

A. Initial Maintenance Service: Beginning at Substantial Completion, provide twelve (12) months full maintenance by skilled employees of MATV system Installer. Include quarterly adjusting as required for optimum system performance. Provide parts and supplies the same as those used in the manufacture and installation of original equipment.

1.15 CONSTRUCTION WASTE MANAGEMENT

A. Construction waste shall be managed in accordance with provisions of Section 017419 - Construction Waste Management and Disposal. Documentation shall be submitted to satisfy the requirements of that Section.

PART 2 - PRODUCTS

2.1 OPTICAL DIVIDING NETWORK

A. 1-input, x 16-output 19-inch rack mount.

B. Connector type: SC/APC.

C. Maximum Insertion Loss: 14.8dB 1310nm & 1550nm.

D. Basis of Design: Blonder Tongue Laboratories FOC-116U-SA.

2.2 OPTICAL ATTENUATORS

A. Type: SC/APC Male to SC/APC Female.

B. Attenuation: Fixed values from 1dB to 25dB in 1dB increments. Select value to provide 0dBm input to optical node

C. Minimum Return Loss:55dB.

2.3 OPTICAL NODES

A. Forward Bandpass: 54-870mHz.

B. Reverse Bandpass: 5-42 mHz.

C. Output Level: +37dBmV at 54mHz, +45dBmV at 870mHz.

D. Composite Triple Beat: -72dB minimum.

E. Composite Second Order Distortion: -65dBmv.

F. Carrier to Noise: 53dB.

G. Basis of Design: ATX Networks QFMN870A-45G2W.

2.4 16-WAY SPLITTERS

A. Bandpass: 5-1000mHz.

B. Insertion Loss: 15dB maximum.

C. Basis of Design: Channel Vision HS-16.

2.5 TAMPER RESISTANT TERMINATORS

A. Terminator Resistance: 75-ohm.

B. Basis of Design: Arrris/Regal

2.6 FIBER JUMPERS

A. Fiber Type: Single Mode 9.5/125 single strand.

B. Connector Type: SC/APC to FC/APC or other APC combination.

PART 3 - EXECUTION

3.1 OPTICAL LEVELS

A. Measure and record 1550nm optical level at input to any new optical dividing network, at output of dividing network and at input to each optical node.

B. Install correct value SC/APC optical attenuator to present exactly 0dBm to node forward path input.

3.2 RF LEVEL ADJUSTMENT

A. Adjust gain and slope controls on each optical node to provide +37dBmV output at 54mHz and +45dBmV output at 870 mHz or on the highest visual carrier.

3.3 TERMINATORS

A. Insure that tamper resistant terminators are installed and tightened on all unused splitter ports.

3.4 FIELD QUALITY CONTROL

A. Distribution System Acceptance Tests:
   1. Field-Strength Instrument: Rated for minus 40-dBmV measuring sensitivity and a frequency range of 54 to 1000 MHz, minimum. Provide documentation of recent calibration against recognized standards.
   2. Signal Level and Picture Quality: Use a field-strength meter or spectrum analyzer, and a standard television receiver to measure signal levels and check picture quality at 100 percent of user-interface outlets.
      a. Test the signal strength in dBmV at 55, 151, 547, and 750 MHz.
      b. Minimum acceptable signal level is +3 dBmV .
      c. Maximum acceptable signal level over the entire bandwidth is 15 dBmV.
      d. Television receiver shall show no evidence of cross-channel intermodulation, ghost images, or beat interference.

PART 4 - MEASUREMENT

4.1 METHOD OF MEASUREMENT

A. Percent of work complete shall be the method for measuring progress.

PART 5 - PAYMENT

5.1 METHOD OF PAYMENT

A. Percent of work complete based on the approved schedule of values.

END OF SECTION

SECTION 281300 - ACCESS CONTROL

PART 1 GENERAL

1.1 RELATED DOCUMENTS

A. Drawings and general provisions of the Contract, including General and Special Conditions and Division 01 Specification Sections, apply to this Section.

1.2 SUMMARY

A. This Contractor shall provide all skilled labor, material, and equipment for the complete installation of the Access Control System additions and modifications as shown on the drawings and specified herein. The Access Control System on this Project is an extension of the existing system. The Contractor shall acquire from the manufacturer the installation practices as published by the Manufacturer. Work includes:
   1. Card Reader.
   2. Security Panel.

B. The Contractor shall be responsible to provide a complete installation in compliance with Owner requirements, City Building Codes and City Fire Prevention Bureau requirements. Contractor shall provide all wiring and will terminate the wiring at the doors and panels along with any controllers. Field device wiring terminations shall be performed by the Contractor. Owner will perform all required headend programming and any required headend expansion. Testing shall be performed jointly by the Contractor, Owner and the Communications Contractor. Contractor shall coordinate all work via the Owner Project Manager.

C. Alternates: Refer to Division 01 Section 012300 "Alternates" for description of Work in this Section affected by Alternates.

D. Refer to Low Voltage Responsibility Matrix provided on cover sheet of drawings for additional procurement and installation responsibilities.

1.3 ACTION SUBMITTALS

A. Refer to Section 013300 - Submittal Requirements for submittal procedures.

B. Product Data: For each type of product.
   1. Include data substantiating that materials comply with requirements.

C. Shop Drawings: Include plans, elevations, sections, details, and attachments to other work.
   1. Diagrams for cable management system.
      a. System labeling schedules, including electronic copy of labeling schedules that are part of the cable and asset identification system of the software specified in Parts 2 and 3.
      b. Wiring Diagrams. For power, signal, and control wiring.

1.4 INFORMATIONAL SUBMITTALS

A. Field quality-control reports.

1.5 CLOSEOUT SUBMITTALS

A. Operation and Maintenance Data: Submit data under provisions of Division 1. In addition to items specified in Section 017800 - Closeout Submittals and Procedures, include the following:

1. Hard copies of manufacturer's specification sheets and PDF files on CD-ROM of the hard-copy submittal.
    a. Include letter from manufacturer’s representative stating that system is operational.

B. As-Built Plans: Submit complete as-built plans of all Work, including interface with other Work, in accordance with requirements as specified in Section 013300 - Submittal Requirements.
    1. Submit as-built documents in conformity with the provisions of Division 1.
        a. Contractor shall maintain on site accurate as-built drawings indicating dimensioned locations of constructed raceway, box and device locations. Any modifications to work depicted on the Engineered shop drawings shall be noted. Documents shall be updated daily and shall at all times be available for Owner and Engineer review.
        b. Contractor shall provide circuit information for all powered equipment installed, as part of the as-built plans.

C. Equipment List: Include every piece of equipment by model number, manufacturer, serial number, location, and date of original installation. Add pretesting record of each piece of equipment, listing name of person testing, date of test, set points of adjustments, name and description of the view of preset positions, description of alarms, and description of unit output responses to an alarm.

1.6 QUALITY ASSURANCE

A. Installer Qualifications: An employer of workers trained and approved by manufacturer.
    1. Installer: Company with five (5) years documented experience in installing computerized access control systems.

B. Comply with NFPA 70, "National Fire Protection Association."

C. Contractor shall be fully responsible for daily quality control of all system installation, coordination with trades, and coordination with Owner Maintenance and Engineering.

1.7 DELIVERY, STORAGE, AND HANDLING

A. All products:
    1. Store in temperature- and humidity-controlled environment in original manufacturer's sealed containers. Maintain ambient temperature between 50 and 85 deg F (10 and 30 deg C), and not more than 80 percent relative humidity, noncondensing.
        a. Open each container; verify contents against packing list; and file copy of packing list, complete with container identification, for inclusion in operation and maintenance data.
        b. Save original manufacturer's containers and packing materials and deliver as directed under provisions covering extra materials.

1.8 PROJECT CONDITIONS

A. Environmental Conditions: System shall be capable of withstanding the following environmental conditions without mechanical or electrical damage or degradation of operating capability:
    1. Control Station: Rated for continuous operation in ambient conditions of 60 to 85 deg F (16 to 30 deg C) and a relative humidity of 20 to 80 percent, noncondensing.
        a. Indoor, Controlled Environment: NEMA 250, Type 1 enclosure. System components, except the central-station control unit, installed in air-conditioned, temperature-controlled indoor environments shall be rated for continuous operation in

ambient conditions of 36 to 122 deg F (2 to 50 deg C) dry bulb and 20 to 90 percent relative humidity, noncondensing.

b. Indoor, Uncontrolled Environment: NEMA 250, Type 3R, Type 4, Type 12, Type 12K enclosures. System components installed in non-air-conditioned, non-temperature-controlled indoor environments shall be rated for continuous operation in ambient conditions of 0 to 122 deg F (minus 18 to plus 50 deg C) dry bulb and 20 to 90 percent relative humidity, noncondensing.
c. Outdoor Environment: NEMA 250, NEMA 250, Type 3, Type 3R, Type 3S, Type 4, Type 4X enclosures. System components installed in locations exposed to weather shall be rated for continuous operation in ambient conditions of minus 30 to plus 122 deg F (minus 34 to plus 50 deg C) dry bulb and 20 to 90 percent relative humidity, condensing. Rate for continuous operation where exposed to rain as specified in NEMA 250, winds up to 85 mph (137 km/h) and snow cover up to 24 inches (610 mm) thick.
d. Hazardous Environment: System components located in areas where fire or explosion hazards may exist because of flammable gases or vapors, flammable liquids, combustible dust, or ignitable fibers shall be rated, listed, and installed according to NFPA 70.
e. Corrosive Environment: For system components subjected to corrosive fumes, vapors, and wind-driven salt spray in coastal zones, provide NEMA 250, Type 4X, Type 6P enclosures.

1.9 WARRANTY

A. Special Warranty: Manufacturer's standard form in which manufacturer agrees to repair or replace components of cameras, equipment related to camera operation, and control-station equipment that fail in materials or workmanship within specified warranty period. Reference Section 270500 for additional warranty requirements.
   1. Warranty Period: Minimum three (3) years from date of Substantial Completion.
      a. Warranty service shall be provided by a trained specialist of the equipment manufacturer, who shall be based in a fully staffed, fully stocked (replacement parts and test equipment) office, located within 50 miles of the site.

1.10 CONSTRUCTION WASTE MANAGEMENT

A. Construction waste shall be managed in accordance with provisions of Section 017419 - Construction Waste Management and Disposal. Documentation shall be submitted to satisfy the requirements of that Section.

PART 2 PRODUCTS

2.1 MANUFACTURERS

A. Manufacturers: Subject to compliance with requirements, provide products by the following:
   1. Card reader: HID Global Corporation.

B. All Access Control equipment shall be purchased and installed by Owner approved sub-contractor. Contractor shall coordinate all work through the Owners Project Manager.

2.2 CONTROL PANEL

A. Shall match manufacturer of existing system. Contractor shall coordinate all work through the Owners Project Manager.

2.3 CARD READER

A. Approved Product:
   1. HID multiclass SE card readers

B. Door Hardware Interface:
   1. Comply with requirements in Section 087100 - Door Hardware for door hardware required to be monitored or controlled by the access control system.

2.4 POWER SUPPLY

A. Products:
   1. Von Duprin: PS914.

2.5 MAGNETIC LOCK

A. Products:
   1. CRL Brand #MLST1200M Maglock.

2.6 DOOR POSITION SWITCH

A. Products:
   1. Sentrol 2507A

2.7 CABLES

A. General Cable Requirements: Comply with requirements in Section 270513 - Conductors and Cables and as recommended by system manufacturer for integration requirement.

B. Cable conductors shall be stranded shielded copper. Provide cable with chrome gray PVC jacket and UL-CMP listing.

C. Refer to Cabling Schedule in Part 3 for cable types.

D. Approved Cable Manufacturers:
   1. Belden, West Penn or approved equal.

PART 3 EXECUTION

3.1 EXAMINATION

A. Examine pathway elements intended for cables. Check raceways, cable trays, and other elements for compliance with space allocations, installation tolerances, hazards to cable installation, and other conditions affecting installation.

B. Examine roughing-in for LAN and control cable conduit systems to PCs, controllers, card readers, and other cable-connected devices to verify actual locations of conduit and back boxes before device installation.

C. Proceed with installation only after unsatisfactory conditions have been corrected.

3.2 PREPARATION

A. The Contractor shall coordinate and arrange a pre-work meeting with the Owner Project Manager and Owner Technical Maintenance one week in advance of the beginning of any work.

The Contractor shall assure attendance of trades installing fire alarm system. The Owner Project Manager shall review the Contractor's construction demolition, phasing, implementation and testing plans and schedule.

B. Meeting Notes: Meeting notes shall be accurately recorded by the Owner Project Manager and distributed after the meeting.

3.3 GENERAL

A. Installation shall be supervised and tested by a representative of the manufacturer of the system equipment. The Work shall be performed by skilled technicians under the direction of experienced engineers, all of whom shall be properly factory trained and qualified for this Work.

B. Raceways: Raceays shall be installed in accordance with Section 270528 - Pathways for Communications".

C. Wire and Cable: All wiring and cable shall be installed in metal raceways or within equipment. Splices shall not be allowed. Conductors within equipment enclosures shall be carefully cabled and laced. Individual cables shall be tagged with markers indicating circuit number and type. Markers shall be used and numbered according to Cabling Schedule with cable numbers on all conductors at each outlet or pull box at each equipment enclosure.

3.4 CABLING

A. Comply with NECA 1, "Good Workmanship in Electrical Construction."

B. Install cables and wiring according to requirements in Section 270513.

C. Wiring Method: Install wiring in raceway except within consoles, cabinets, desks, and counters. Conceal raceway and wiring except in unfinished spaces.

D. Cabling Schedule:

Cable Number:	From:	To:	Cable Type:
1	Magnet	Terminal Strip	2/C 18 AWG
2	Door Position	Controller	2/C 18 AWG
3	Push bar	Terminal Strip	2/C 18 AWG
4	Photo Sensor	Controller	3/C 18 AWG
5	Card Reader	Controller	6/C 22 AWG Overall Shield
6	Fire Alarm	Terminal Strip	2/C 18 AWG
7	Remote "Help"	Controller	2/C 22 AWG
8	Lock Set	Controller	2/C 16 AWG
9	Power Supply	Terminal Strip	2/C 18 AWG
10	Emer. Exit Button		2/C 18 AWG
11	Push bar / Lock Set	Terminal Strip & IDC	4/C 18 AWG

3.5 GROUNDING

A. Comply with Section 260526 - Grounding and Bonding for Electrical Systems.

B. Comply with IEEE 1100, "Recommended Practice for Power and Grounding Electronic Equipment."

C. Ground cable shields, drain conductors, and equipment to eliminate shock hazard and to minimize ground loops, common-mode returns, noise pickup, cross talk, and other impairments.

D. Bond shields and drain conductors to ground at only one point in each circuit.

E. Signal Ground:
   1. Terminal: Locate in each equipment room and wiring closet; isolate from power system and equipment grounding.
   2. Bus: Mount on wall of main equipment room with standoff insulators.
   3. Backbone Cable: Extend from signal ground bus to signal ground terminal in each equipment room and wiring closet.

3.6 INSTALLATION

A. Install card readers, keypads, push buttons, and biometric readers in compliance with Project requirements.

B. Each Control Panel shall be provided with a dedicated branch circuit. Comply with the requirements of Division 26.

3.7 INTERFACE WITH OTHER SYSTEMS

A. Interface programming of closed circuit television system with computerized card access system shall be by Owner Technical Maintenance and/or Owner Security. Coordinate all work through the Owner Project Manager.

3.8 IDENTIFICATION

A. In addition to requirements in this article, comply with applicable requirements in Section 260553 - Identification for Electrical Systems and with TIA 606-C.

B. Label each terminal strip and screw terminal in each cabinet, rack, or panel.
   1. All wiring conductors connected to terminal strips shall be individually numbered, and each cable or wiring group being extended from a panel or cabinet to a building-mounted device shall be identified with the name and number of the particular device as shown.
   2. Each wire connected to building-mounted devices is not required to be numbered at the device if the color of the wire is consistent with the associated wire connected and numbered within the panel or cabinet.

C. At completion, cable and asset management software shall reflect as-built conditions.

3.9 SYSTEM SOFTWARE AND HARDWARE

A. Develop, install, and test software and hardware, and perform database tests for the complete and proper operation of systems involved. Assign software license to Owner.

3.10 FIELD QUALITY CONTROL

A. Perform tests and inspections.
   1. Manufacturer's Field Service: Engage a factory-authorized service representative to inspect components, assemblies, and equipment installations, including connections, and to assist in testing.

B. Tests and Inspections:
   1. The Contractor shall provide all personnel, equipment, instrumentation, and supplies necessary to perform all testing.
   2. Owner Project Manager will witness all field tests.
   3. When installation is complete, the system shall be tested by the Contractor. A representative of the installing Contractor shall submit a written report of the findings to the Owner Project Manager. Representative shall be factory trained and certified and have at least three (3) years experience installing access control systems.
   4. Report shall consist of a complete listing of every device and feature, the date it was tested and by whom, the results, and the date retested (if failure occurred during any previous tests). The final test reports shall indicate that every device tested successfully. Submit two (2) typed copies of the test reports in a neatly bound folder to the Owner's Representative for approval, and also submit electronic copy in compliance with Owner requirements. Failure to comply will result in a delay of final testing and acceptance.
   5. The field testing shall as a minimum include:
      a. Verification that the data transmission media and any signal or control cabling has been installed, tested, and approved.
      b. Verification that the new access control equipment is fully functional.
      c. Operation of all electrical, mechanical, and software controls and verification that the control performs the designed function.
      d. Verification that all other ancillary access control equipment is functioning properly.

C. Devices and circuits will be considered defective if they do not pass tests and inspections.

D. Prepare test and inspection reports.

3.11 CLEANING

A. Clean installed items using methods and materials recommended in writing by manufacturer.

PART 4 MEASUREMENT

4.1 METHOD OF MEASUREMENT

A. Percent of work complete shall be the method for measuring progress.

PART 5 PAYMENT

5.1 METHOD OF PAYMENT

A. Percent of work complete based on the approved schedule of values.

END OF SECTION

SECTION 281333 - LOCKDOWN-LOCKOUT SYSTEM

PART 1 GENERAL

1.1 SYSTEM SUMMARY

A. The lockDOWN/lockOUT system shall provide isolated control of the building's access and notification systems. Building staff shall be able to initiate a lockDOWN or lockOUT by depressing the corresponding physical button.

1.2 SYSTEM DESIGN

A. District specific uses and functions
   1. LockDOWN: When a lockDOWN is initiated, it shall trigger the following systems with the resulting actions:
      a. Fire Panel: Release all corridor and roll top doors (if equipped) to restrict access of the internal threat.
      b. Intercom: Initiate "Security Alert" message on all interior and exterior speakers to notify all building occupants and those outside of the building that the school is in lockDOWN.
      c. Security Panel: Trigger an alarm condition on zone 2, signaling the District 12 Communication Center that the school is in lockDOWN.
      d. Access Control: Release the main entry door allowing emergency responders access to the building.
   2. LockOUT: When a lockOUT is initiated, the system shall trigger trigger the following systems with the resulting actions:
      a. Security Panel: Trigger an alarm condition on zone 3, signaling the District 12 Communication Center that the school is in lockOUT.
      b. Access Control: Secure all perimeter doors, restricting access of the external threat.

B. System Layout
   1. The lockDOWN/lockOUT panel shall reside in the MDF.
   2. Unless otherwise noted on drawings, The lockDOWN and lockOUT buttons shall reside in the main office.
   3. Reference LockDOWN/LockOUT Wiring Diagram (Section 3.05) for system configuration.

1.3 REFERENCES

A. Conform to the most current code requirements included but not limited to
   1. NFPA 70 - National Electrical Code
   2. NFPA 72 - National Fire Alarm Code
   3. NFPA 101 -Life Safety Code
   4. Comply with all local codes and Authorities Having Jurisdiction
   5. Americans with Disabilities Act - Public Law 101.336
   6. UL 294 - Access Control Systems
   7. UL 1076 - Proprietary Burglar Alarm Units and Systems

PART 2 PRODUCTS

2.1 HARDWARE

A. Enclosure

1. Mier, BW-101B (15”W x 18”H x 4”D)

B. Power Supply
   1. Altronix, AL176ULX

C. Relays
   1. IDEC, RH1B-ULDC24V Power Relay
   2. IDEC, SH1B-05 Relay Socket
   3. IDEC BNDN1000 DIN Mounting Rail (35mm, Aluminum)

D. LockDOWN Button
   1. Camden, CM-3050R

E. LockOUT Button
   1. Camden CM-3050R
      a. Use Schneider Electric ZB4BW663, blue button mechanism to replace the red.

F. LockDOWN Strobe
   1. Edwards Signaling, 125XBRi
   2. a. 24V
   3. b. Red, Green, Amber

PART 3 EXECUTION

3.1 PERSONNEL

A. The contractor shall provide proof that designated service and support personnel have successfully completed the appropriate level of both hardware and software training offered by the manufacturer for installation and maintenance of the specified system

3.2 INSTALLATION

A. The contractor shall install all system components in accordance with the manufacturer’s specifications, referenced practices, guidelines, and applicable codes. Furnish all necessary interconnections, services, and adjustments required for a complete and operable system as specified. Control signal, communications, and data transmissions line grounding shall be installed as necessary to preclude ground loops, noise, and surges from adversely affecting system operation.

B. All exposed wiring inside and outside the control console, cabinets, boxes and similar enclosures shall be dressed down neatly and secured with wiring cleats and/or wiring ties. All connections shall be completely terminated, pulled tight with slack removed and routed in such a way as to allow direct, unimpeded access to the equipment within the enclosure. Weatherproof equipment or covers shall be used in areas where cabling will be exposed to weather.

C. Provide grommets and strain relief where necessary to avoid abrasion and/or excess tension on wire. Wire splices shall be soldered and insulated with heat-shrink tubing. The use of electrical tape shall not be accepted. Solder-less connections shall be mechanically and electrically secured in accordance with manufacturer's recommendations.

D. Cabling
   1. Dedicated 18 AWG/4 conductor wiring shall be used to connect the lockDOWN and lockOUT buttons to the panel. 18 AWG/2 conductor wiring (black/white) shall be used to connect the

relay socket to the corresponding field system. 18 AWG wires shall interconnect the relay sockets.

2. Cables shall be labelled within 12 inches of the termination point (identically at both the panel and field device/system), identifying the component/purpose.

E. Component Labeling
   1. Relay sockets shall be labeled on the base of the Altronix cabinet indicating their function. Labeling and relay order shall be as follows:
      a. LD Fire
      b. LD Intercom
      c. LD Intrusion
      d. LD Access Control
      e. LO Intrusion
      f. LO Access Control
   2. LockDOWN and LockOUT buttons shall be labeled on the faceplate to distinguish them from one another.

F. Panel
   1. The Altronix, AL176ULX power supply cabinet shall be housed within the Mier, BW-101B enclosure to accommodate two 12V 7Ah backup batteries in the bottom of the Mier enclosure.
   2. The relays shall be wired for a normally open operation. Upon energizing, the relays will change to a closed state. The 4 lockDOWN and 2 lockOUT relays will operate independently of each other.
   3. The relay socket output for the following systems shall be monitored using the following resistor values:
      a. Fire Alarm: Notifier: 4.7kO Simplex: 6.8kO
      b. Security: 2kO

G. Buttons
   1. The lockDOWN and lockOUT buttons shall be flush mounted at a height between 48”-60” on center. The buttons shall installed 8” on center from each other.

3.3 COMMISSIONING

A. The contractor shall perform final acceptance testing in the presence of District representative, executing a point by point inspection against a documented test plan that demonstrates compliance with system requirements as designated and specified.

3.4 WARRANTY

A. The lockDOWN/lockOUT, hardware and installation shall be warranted against defects and workmanship for 1 year, covering all parts, labor.

B. The Security Contractor shall be the primary contact and respondent for all service and support recognized and backed by the manufacturer of components used on the lockDOWN/lockOUT system.

3.5 DIAGRAMS

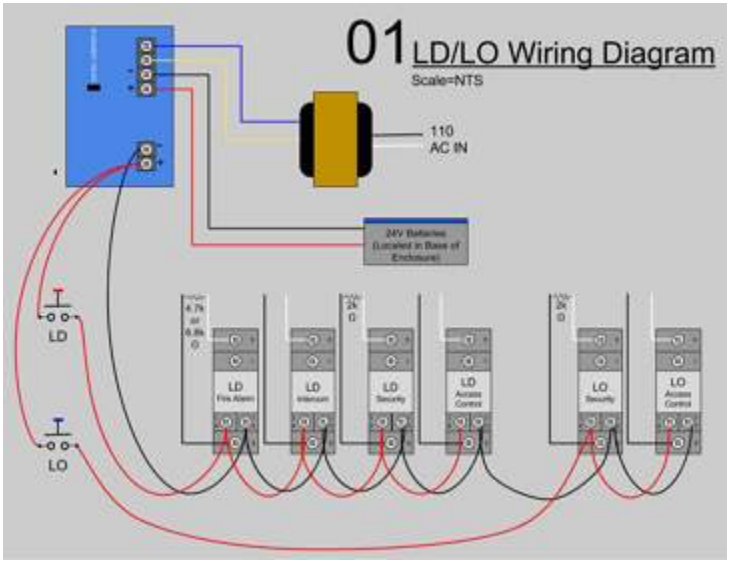

END OF SECTION

SECTION 281600 - INTRUSION DETECTION

PART 1 GENERAL

1.1 RELATED DOCUMENTS

A. Drawings and general provisions of the Contract, including General and Supplementary Conditions and Division 01 Specification Sections, apply to this Section.

1.2 SUMMARY

A. Section Includes:
   1. Intrusion detection with communication links to perform monitoring, alarm, and control functions.
   2. Integration of other electronic and electrical systems and equipment.

1.3 RELATED SECTIONS:

A. Section 282300 - Video Surveillance for CCTV cameras that are used as devices for video motion detection.

B. Alternates: Refer to Section 012300 - Alternates for description of Work in this Section affected by Alternates.

1.4 DEFINITIONS

A. CCTV: Closed-circuit television.

B. PIR: Passive infrared.

C. RFI: Radio-frequency interference.

D. UPS: Uninterruptible power supply.

E. Control Unit: System component that monitors inputs and controls outputs through various circuits.

F. Master Control Unit: System component that accepts inputs from other control units and may also perform control-unit functions. The unit has limited capacity for the number of protected zones and is installed at an unattended location or at a location where it is not the attendant's primary function to monitor the security system.

G. Monitoring Station: Facility that receives signals and has personnel in attendance at all times to respond to signals. A central station is a monitoring station that is listed.

H. Protected Zone: A protected premises or an area within a protected premises that is provided with means to prevent an unwanted event.

I. Standard Intruder: A person who weighs 100 lb or less and whose height is 60 inches or less; dressed in a long-sleeved shirt, slacks, and shoes unless environmental conditions at the site require protective clothing.

J. Standard-Intruder Movement: Any movement, such as walking, running, crawling, rolling, or jumping, of a "standard intruder" in a protected zone.

K. Systems Integration: The bringing together of components of several systems containing interacting components to achieve indicated functional operation of combined systems.

L. Zone. A defined area within a protected premises. It is a space or area for which an intrusion must be detected and uniquely identified. The sensor or group of sensors must then be assigned to perform the detection, and any interface equipment between sensors and communication must link to master control unit.

1.5 ACTION SUBMITTALS

A. Refer to Section 013300 - Submittal Requirements for submittal procedures.

B. Product Data: Components for sensing, detecting, systems integration], and control, including dimensions and data on features, performance, electrical characteristics, ratings, and finishes.
   1. Include data substantiating that materials comply with requirements.

C. Shop Drawings: Detail assemblies of standard components that are custom assembled for specific application on this Project.
   1. Functional Block Diagram: Show single-line interconnections between components including interconnections between components specified in this Section and those furnished under other Sections. Indicate methods used to achieve systems integration. Indicate control, signal, and data communication paths and identify programmable logic controllers, networks and control interface devices and media to be used. Describe characteristics of network and other data communication lines.
      a. Indicate methods used to achieve systems integration.
      b. Indicate control, signal, and data communication paths and identify PLCs, networks, control interface devices, and media to be used.
      c. Describe characteristics of network and other data communication lines.
      d. Describe methods used to protect against power outages and transient voltages including types and ratings of isolation and surge suppression devices used in data, communication, signal, control, and ac and dc power circuits.
   2. Raceway Riser Diagrams: Detail raceway runs required for intrusion detection and for systems integration]. Include designation of devices connected by raceway, raceway type and size, and type and size of wire and cable fill for each raceway run.
   3. UPS: Sizing calculations.
   4. Site and Floor Plans: Indicate final outlet and device locations, routing of raceways, and cables inside and outside the building. Include room layout for master control-unit console, terminal cabinet, racks, and UPS.
   5. Master Control-Unit Console Layout: Show required artwork and device identification.
   6. Device Address List: Coordinate with final system programming.
   7. System Wiring Diagrams: Include system diagrams unique to Project. Show connections for all devices, components, and auxiliary equipment. Include diagrams for equipment and for system with all terminals and interconnections identified.
   8. Details of surge-protection devices and their installation.
   9. Sensor detection patterns and adjustment ranges.

D. Equipment and System Operation Description: Include method of operation and supervision of each component and each type of circuit. Show sequence of operations for manually and automatically initiated system or equipment inputs. Description must cover this specific Project; manufacturer's standard descriptions for generic systems are unacceptable.

E. Samples for Initial Selection: For units with factory-applied color finishes.

F. Samples for Verification: For each type of exposed finish required.

1.6 INFORMATIONAL SUBMITTALS

A. Qualification Data: For intrusion detection systems integrator.

B. Field quality-control reports.

C. Warranty: Sample of special warranty.

D. Other Information Submittals:
   1. Test Plan and Schedule: Test plan defining all tests required to ensure that system meets technical, operational, and performance specifications within 60 days] <Insert number> of date of Contract award.
   2. Examination reports documenting inspections of substrates, areas, and conditions.
   3. Anchor inspection reports documenting inspections of built-in and cast-in anchors.

1.7 CLOSEOUT SUBMITTALS

A. Operation and Maintenance Data: For intrusion detection system to include in emergency, operation, and maintenance manuals. In addition to items specified in Section 017800 - Closeout Submittals and Procedures, include the following:
   1. Data for each type of product, including features and operating sequences, both automatic and manual.
   2. Master control-unit hardware and software data.

B. As-Built Plans: Submit complete as-built plans of all Work, including interface with other Work, in accordance with requirements as specified in Section 013300 - Submittal Requirements.

1.8 MAINTENANCE MATERIAL SUBMITTALS

A. Furnish extra materials that match products installed and that are packaged with protective covering for storage and identified with labels describing contents.
   1. Intrusion Detection Devices: Furnish quantity equal to five percent of the number of units of each type installed, but no fewer than one of each type.
   2. Fuses: Three of each kind and size.
   3. Tool Kit: Provide six sets of tools for use with security fasteners, each packaged in a compartmented kit configured for easy handling and storage.
   4. Security Fasteners: Furnish no fewer than 1 box for every 50 boxes or fraction thereof, of each type and size of security fastener installed.

1.9 QUALITY ASSURANCE

A. Installer Qualifications:
   1. An employer of workers, at least one of whom is a technician certified by the National Burglar & Fire Alarm Association.
   2. Manufacturer's authorized representative who is trained and approved for installation of units required for this Project.

B. Intrusion Detection Systems Integrator Qualifications: An experienced intrusion detection equipment supplier and Installer] who has completed systems integration work for installations

similar in material, design, and extent to that indicated for this Project, whose work has resulted in construction with a record of successful in-service performance.

C. Testing Agency Qualifications: Member company of NETA or an NRTL.
   1. Testing Agency's Field Supervisor: Currently certified by NETA to supervise on-site testing.

D. Electrical Components, Devices, and Accessories: Listed and labeled as defined in NFPA 70, by a qualified testing agency, and marked for intended location and application.

E. Control Units, Devices, and Communications with Monitoring Station: Listed and labeled by a qualified testing agency for compliance with SIA CP-01.

F. FM Global Compliance: FM-Approved and -labeled intrusion detection devices and equipment.

G. Comply with NFPA 70.

1.10 PROJECT CONDITIONS

A. Environmental Conditions: Capable of withstanding the following environmental conditions without mechanical or electrical damage or degradation of operating capability:
   1. Altitude: Sea level to [5500 feet] <Insert elevation>.
   2. Master Control Unit: Rated for continuous operation in an ambient of 60 to 85 deg F and a relative humidity of 20 to 80 percent, noncondensing.
   3. Interior, Controlled Environment: System components, except master control unit, installed in [air-conditioned] [temperature-controlled] interior environments shall be rated for continuous operation in ambients of [36 to 122 deg F] <Insert temperature range> dry bulb and 20 to 90 percent relative humidity, noncondensing.
   4. Interior, Uncontrolled Environment: System components installed in [non-air-conditioned] [non-temperature-controlled] interior environments shall be rated for continuous operation in ambients of [0 to 122 deg F] <Insert temperature range> dry bulb and 20 to 90 percent relative humidity, noncondensing.
   5. Exterior Environment: System components installed in locations exposed to weather shall be rated for continuous operation in ambients of [minus 30 to plus 122 deg F] <Insert temperature range> dry bulb and 20 to 90 percent relative humidity, condensing. Comply with UL 294 and UL 639 for outdoor-use equipment. Rate for continuous operation when exposed to rain as specified in NEMA 250, winds up to [85 mph] [and snow cover up to 24 inches thick].
   6. Hazardous Environment: System components located in areas where fire or explosion hazards may exist because of flammable gases or vapors, flammable liquids, combustible dust, or ignitable fibers or flyings shall be rated, listed, and installed according to NFPA 70.

1.11 WARRANTY

A. Special Warranty: Manufacturer's standard form in which manufacturer and Installer agree to repair or replace components of intrusion detection devices and equipment that fail in materials or workmanship within specified warranty period.
   1. Warranty Period: Minimum two years from date of Substantial Completion.

1.12 CONSTRUCTION WASTE MANAGEMENT

A. Construction waste shall be managed in accordance with provisions of Section 017419 - Construction Waste Management and Disposal. Documentation shall be submitted to satisfy the requirements of that Section.

PART 2 PRODUCTS

2.1 FUNCTIONAL DESCRIPTION OF SYSTEM

A. Description: **Hard-wired and Multiplexed, modular, microprocessor-based controls, intrusion sensors and detection devices, and communication links to perform monitoring, alarm, and control functions.**

B. Supervision: System components shall be continuously monitored for normal, alarm, [supervisory,]and trouble conditions. Indicate deviations from normal conditions at any location in system. Indication includes identification of device or circuit in which deviation has occurred and whether deviation is an alarm or malfunction.
   1. Alarm Signal: Display at master control unit and actuate audible and visual alarm devices.
   2. Trouble Condition Signal: Distinct from other signals, indicating that system is not fully functional. Trouble signal shall indicate system problems such as battery failure, open or shorted transmission line conductors, or control-unit failure.
   3. Supervisory Condition Signal: Distinct from other signals, indicating an abnormal condition as specified for the particular device or control unit.

C. System Control: Master control unit shall directly monitor intrusion detection units and connecting wiring.

D. System Control: Master control unit shall directly monitor intrusion detection devices[, perimeter detection units,] [, control units associated with perimeter detection units,] and connecting wiring in a multiplexed distributed control system or as part of a network.

E. System shall automatically reboot program without error or loss of status or alarm data after any system disturbance.

F. Operator Commands:
   1. Help with System Operation: Display all commands available to operator. Help command, followed by a specific command, shall produce a short explanation of the purpose, use, and system reaction to that command.
   2. Acknowledge Alarm: To indicate that alarm message has been observed by operator.
   3. Place Protected Zone in Access: Disable all intrusion-alarm circuits of a specific protected zone. Tamper circuits may not be disabled by operator.
   4. Place Protected Zone in Secure: Activate all intrusion-alarm circuits of a protected zone.
   5. Protected Zone Test: Initiate operational test of a specific protected zone.
   6. System Test: Initiate system-wide operational test.
   7. Print reports.

G. Timed Control at Master Control Unit: Allow automatically timed "secure" and "access" functions of selected protected zones.

H. Automatic Control of Related Systems: Alarm or supervisory signals from certain intrusion detection devices control the following functions in related systems:
   1. Switch selected lights.
   2. Shift elevator control to a different mode.
   3. Open a signal path between certain intercommunication stations.
   4. Shift sound system to "listening mode" and open a signal path to certain system speakers.

5. Switch signal to selected monitor from CCTV camera in vicinity of sensor signaling an alarm.
6. <Insert description of automatic control required>.

I. Printed Record of Events: Print a record of alarm, supervisory, and trouble events on system printer. Sort and report by protected zone, device, and function. When master control unit receives a signal, print a report of alarm, supervisory, or trouble condition. Report type of signal (alarm, supervisory, or trouble), protected zone description, date, and time of occurrence. Differentiate alarm signals from other indications. When system is reset, report reset event with the same information concerning device, location, date, and time. Commands shall initiate the reporting of a list of current alarm, supervisory, and trouble conditions in system or a log of past events.

J. Response Time: Two (2) seconds between actuation of any alarm and its indication at master control unit.

K. Circuit Supervision: Supervise all signal and data transmission lines, links with other systems, and sensors from master control unit. Indicate circuit and detection device faults with both protected zone and trouble signals, sound a distinctive audible tone, and illuminate an LED. Maximum permissible elapsed time between occurrence of a trouble condition and indication at master control unit is 20 seconds. Initiate an alarm in response to opening, closing, shorting, or grounding of a signal or data transmission line.

L. Programmed Secure-Access Control: System shall be programmable to automatically change status of various combinations of protected zones between secure and access conditions at scheduled times. Status changes may be preset for repetitive, daily, and weekly; specially scheduled operations may be preset up to a year in advance. Manual secure-access control stations shall override programmed settings.

M. Manual Secure-Access Control: Coded entries at manual stations shall change status of associated protected zone between secure and access conditions.

2.2 SYSTEM COMPONENT REQUIREMENTS

A. Compatibility: Detection devices and their communication features, connecting wiring, and master control unit shall be selected and configured with accessories for full compatibility with the following equipment:
   1. Door hardware specified in Section 087100 - Door Hardware.
   2. Lighting controls specified in Section 260923 - Lighting Control Devices.
   3. Access control system specified in Section 281300 - Access Control.
   4. Fire alarm system specified in Section 283100 - Fire Detection and Alarm
   5. Video surveillance system specified in Section 282300 - Video Surveillance.

B. Surge Protection: Protect components from voltage surges originating external to equipment housing and entering through power, communication, signal, control, or sensing leads. Include surge protection for external wiring of each conductor entry connection to components.
   1. Minimum Protection for Power Lines 120 V and More: Auxiliary panel suppressors complying.
   2. Minimum Protection for Communication, Signal, Control, and Low-Voltage Power Lines: Listed and labeled by a qualified testing agency for compliance with NFPA 731.

C. Intrusion Detection Units: Listed and labeled by a qualified testing agency for compliance with UL 639.

D. Interference Protection: Components shall be unaffected by radiated RFI and electrical induction of 15 V/m over a frequency range of 10 to 10,000 MHz and conducted interference signals up to 0.25-V rms injected into power supply lines at 10 to 10,000 MHz.

E. Tamper Protection: Tamper switches on detection devices, control units, annunciators, pull boxes, junction boxes, cabinets, and other system components shall initiate a tamper-alarm signal when unit is opened or partially disassembled and when entering conductors are cut or disconnected. Master control-unit alarm display shall identify tamper alarms and indicate locations.

F. Self-Testing Devices: Automatically test themselves periodically, but not less than once per hour, to verify normal device functioning and alarm initiation capability. Devices transmit test failure to master control unit.

G. Antimasking Devices: Automatically check operation continuously or at intervals of a minute or less, and use signal-processing logic to detect blocking, masking, jamming, tampering, or other operational dysfunction. Devices transmit detection of operational dysfunction to master control unit as an alarm signal.

H. Addressable Devices: Transmitter and receivers shall communicate unique device identification and status reports to master control unit.

I. Remote-Controlled Devices: Individually and remotely adjustable for sensitivity and individually monitored at master control unit for calibration, sensitivity, and alarm condition.

2.3 ENCLOSURES

A. Interior Sensors: Enclosures that protect against dust, falling dirt, and dripping noncorrosive liquids.

B. Interior Electronics: NEMA 250, Type 12.

C. Exterior Electronics: NEMA 250, Type 4X, **[fiberglass] [stainless steel]**.

D. Corrosion Resistant: NEMA 250, Type 4X, **[PVC] [stainless steel]**.

E. Screw Covers: Where enclosures are readily accessible, secure with security fasteners of type appropriate for enclosure.

2.4 SECURE AND ACCESS DEVICES

A. Manufacturers: Subject to compliance with requirements, provide products by one of the following:
   1. Bosch Security Systems, Inc.
   2. Corby Industries, Inc.
   3. Crow Electronic Engineering, Inc.
   4. DAQ Electronics, Inc.
   5. Digital Security Controls Ltd.; a business unit of Tyco Safety Products.
   6. Edwards Signaling & Security Systems; part of GE Security.
   7. Honeywell International Inc.; Honeywell Security.
   8. Visonic Inc.
   9. Insert manufacturer
   10. or approved equal.

B. Keypad and Display Module: Arranged for entering and executing commands for system-status changes and for displaying system-status and command-related data.

C. Key-Operated Switch: Change protected zone between secure and access conditions.

2.5 DOOR AND WINDOW SWITCHES

A. Manufacturers: Subject to compliance with requirements, provide products by one of the following:
   1. Aleph America Corporation.
   2. General Electric Company; GE Security, Inc.
   3. George Risk Industries.
   4. Honeywell International Inc.; Honeywell Security.
   5. Honeywell International Inc.; Honeywell Video Systems.
   6. Optex Inc.
   7. Potter Electric Signal, LLC.
   8. Insert manufacturer
   9. or approved equal.

B. Description: Balanced-magnetic switch, complying with UL 634, installed on frame with integral overcurrent device to limit current to 80 percent of switch capacity. Bias magnet and minimum of [two (2)] [three (3)] encapsulated reed switches shall resist compromise from introduction of foreign magnetic fields.

C. Flush-Mounted Switches: Unobtrusive and flush with surface of door and window frame.

D. Overhead Door Switch: Balanced-magnetic type, listed for outdoor locations, and having door-mounted magnet and floor-mounted switch unit.

E. Remote Test: Simulate movement of actuating magnet from master control unit.

2.6 PIR SENSORS

A. Manufacturers: Subject to compliance with requirements, provide products by one of the following:
   1. Aleph America Corporation.
   2. Bosch Security Systems, Inc.
   3. Crow Electronic Engineering, Inc.
   4. Digital Security Controls Ltd.; a business unit of Tyco Safety Products.
   5. General Electric Company; GE Security, Inc.
   6. Honeywell International Inc.; Honeywell Security.
   7. Visonic Inc.
   8. Insert manufacturer
   9. or approved equal.

B. Listed and labeled by a qualified testing agency for compliance with SIA PIR-01.

C. Description: Sensors detect intrusion by monitoring infrared wavelengths emitted from a human body within their protected zone and by being insensitive to general thermal variations.
   1. Wall-Mounted Unit Maximum Detection Range: 125 percent of indicated distance for individual units and not less than 50 feet.[Provide adjustable coverage pattern as indicated.]
   2. Ceiling-Mounted Unit Spot-Detection Pattern: Full 360-degree conical.

3. Ceiling-Mounted Unit Pattern Size: 84-inch diameter at floor level for units mounted 96 inches above floor; 18-foot diameter at floor level for units mounted 25 feet above floor.

D. Device Performance:
1. Sensitivity: Adjustable pattern coverage to detect a change in temperature of 2 deg F or less, and standard-intruder movement within sensor's detection patterns at any speed between 0.3 to 7.5 fps across two adjacent segments of detector's field of view.
2. Test Indicator: LED test indicator that is not visible during normal operation. When visible, indicator shall light when sensor detects an intruder. Locate test enabling switch under sensor housing cover.
3. Remote Test: When initiated by master control unit, start a test sequence for each detector element that simulates standard-intruder movement within sensor's detection patterns, causing an alarm.

2.7 MICROWAVE INTRUSION DETECTORS (INTERIOR)

A. Manufacturers: Subject to compliance with requirements, provide products by one of the following:
1. Bosch Security Systems, Inc.
2. Crow Electronic Engineering, Inc.
3. Digital Security Controls Ltd.; a business unit of Tyco Safety Products.
4. General Electric Company; GE Security, Inc.
5. Visonic Inc.
6. Insert manufacturer
7. or approved equal.

B. Device Performance: Microwave transmitter establishes an electromagnetic field in an adjustable detection pattern and detects intrusion by monitoring changes in that pattern.
1. Sensitivity: Adjustable, able to detect standard-intruder movement within sensor's detection pattern at any speed between 0.3 to 7.5 fps. Sensor sensitivity adjustments shall be accessible only when sensor housing is removed, and sensors shall comply with 47 CFR 15.
2. Activation Indicator: LED indicator shall not be visible during normal operation. Indicator shall light when sensor detects a standard intruder. Locate test-enabling switch under sensor housing cover.
3. Remote Test: When initiated by master control unit, start a test sequence for each detector element that simulates standard-intruder movement within sensor's detection patterns, causing an alarm.

2.8 ACOUSTIC-TYPE, GLASS-BREAK SENSORS

A. Manufacturers: Subject to compliance with requirements, provide products by one of the following:
1. Crow Electronic Engineering, Inc.
2. Digital Security Controls Ltd.; a business unit of Tyco Safety Products.
3. General Electric Company; GE Security, Inc.
4. Honeywell International Inc.; Honeywell Security.
5. International Electronics, Inc.
6. Potter Electric Signal, LLC.
7. Visonic Inc.
8. Insert manufacturer

9. or approved equal.

B. Listed and labeled by a qualified testing agency for compliance with SIA GB-01.

C. Device Performance: Detect unique, airborne acoustic energy spectrum caused by breaking glass.
   1. Sensor Element: Microprocessor-based, digital device to detect breakage of plate, laminate, tempered, and wired glass while rejecting common causes of false alarms. Detection pattern shall be at least a 20-foot range.
   2. Hookup Cable: Factory installed, not less than 72 inches.
   3. Activation Indicator: LED on sensor housing that lights when responding to vibrations, remaining on until manually reset at sensor control unit**[or at master control unit]**.
   4. Control Unit: Integral with sensor housing or in a separate assembly, locally adjustable by control under housing cover.
   5. Glass-Break Simulator: A device to induce frequencies into protected glass pane that simulate breaking glass without causing damage to glass.

2.9 PIEZOELECTRIC-TYPE, GLASS-BREAK SENSORS

A. Manufacturers: Subject to compliance with requirements, provide products by one of the following:
   1. General Electric Company; GE Security, Inc.
   2. Honeywell International Inc.; Honeywell Security.
   3. Potter Electric Signal, LLC.
   4. Visonic Inc.
   5. Insert manufacturer
   6. or approved equal.

B. Listed and labeled by a qualified testing agency for compliance with SIA GB-01.

C. Device Performance: Detect unique, high-frequency vibrations caused by breaking glass.
   1. Sensor Element: Piezoelectric crystals in a housing designed to mount directly to glass surface with adhesive provided by element manufacturer. Circular detection pattern, with at least a 60-inch radius on a continuous glass pane. Sensor element shall not be larger than 4 sq. in..
   2. Hookup Cable: Factory installed, not less than 72 inches.
   3. Activation Indicator: LED on sensor housing that lights when responding to vibrations, remaining on until manually reset at sensor control unit[or at master control unit].
   4. Control Unit: Integral with sensor housing or in a separate assembly, locally adjustable by control under housing cover.
   5. Glass-Break Simulator: A device to induce frequencies into protected glass pane that simulate breaking glass without causing damage to glass.

2.10 VIBRATION SENSORS

A. Manufacturers: Subject to compliance with requirements, provide products by one of the following:
   1. General Electric Company; GE Security, Inc.
   2. Honeywell International Inc.; Honeywell Security.
   3. Potter Electric Signal, LLC.
   4. Insert manufacturer
   5. or approved equal.

B. Listed and labeled by a qualified testing agency for compliance with SIA GB-01.

C. Description: A sensor control unit and piezoelectric crystal sensor elements that are designed to be rigidly mounted to structure being protected.

D. Device Performance: Detects high-frequency vibrations generated by use of such tools as oxyacetylene torches, oxygen lances, high-speed drills and saws, and explosives that penetrate a structure while not responding to any other mechanical vibration.
   1. Circular detection pattern, with at least a 72-inch radius on protected structure.
   2. Hookup Cable: Factory installed, not less than 72 inches.
   3. Control Unit: Integral with sensor housing or in a separate assembly, locally adjustable by control under housing cover.
   4. Glass-Break Simulator: A device to induce frequencies to protected glass pane that simulate breaking glass without causing damage to glass.

2.11 PHOTOELECTRIC SENSORS

A. Manufacturers: Subject to compliance with requirements, provide products by one of the following:
   1. Aleph America Corporation.
   2. General Electric Company; GE Security, Inc.
   3. Honeywell International Inc.; Honeywell Security.
   4. Optex Inc.
   5. Potter Electric Signal, LLC.
   6. Insert manufacturer
   7. or approved equal.

B. Device Performance: Detect an interruption of a pulsed, infrared, light beam that links transmitter and receiver.
   1. Sensitivity: Detect standard-intruder movement within sensor's detection patterns at any speed of less than 7.5 fps though the beam. Allow installation of multiple sensors within same protected zone that will not interfere with each other.
   2. Activation Indicator: LED indicator shall not be visible during normal operation. Indicator shall light when sensor detects a standard intruder. Locate test enabling switch under sensor housing cover.
   3. Remote Test: When initiated by master control unit, start a test sequence for each detector element that simulates standard-intruder movement within sensor's detection patterns, causing an alarm.

2.12 MICROWAVE-PIR DUAL-TECHNOLOGY SENSORS

A. Manufacturers: Subject to compliance with requirements, provide products by one of the following:
   1. Aleph America Corporation.
   2. General Electric Company; GE Security, Inc.
   3. Honeywell International Inc.; Honeywell Security.
   4. Visonic Inc.
   5. Insert manufacturer
   6. or approved equal.

B. Description: Single unit combining a sensor that detects changes in microwave signals and a PIR sensor that detects changes in ambient level of infrared emissions caused by standard-intruder movement within detection pattern.

C. Listed and labeled by a qualified testing agency for compliance with SIA PIR-01.

D. Device Performance: An alarm is transmitted when either sensor detects a standard intruder within a period of three to eight seconds from when the other sensor detects a standard intruder.
   1. Minimum Detection Pattern: A room 20 by 30 feet.
   2. PIR Sensor Sensitivity: Adjustable pattern coverage to detect a change in temperature of 2 deg F or less, and standard-intruder movement within sensor's detection patterns at any speed between 0.3 to 7.5 fps across two adjacent segments of detector's field of view.
   3. Microwave Sensor Sensitivity: Adjustable, able to detect standard-intruder movement within sensor's detection pattern at any speed between 0.3 to 7.5 fps. Sensor sensitivity adjustments shall be accessible only when sensor housing is removed, and sensors shall comply with 47 CFR 15.
   4. Activation Indicator: LED indicator shall not be visible during normal operation. Indicator shall light when sensor detects a standard intruder. Locate test enabling switch under sensor housing cover.
   5. Remote Test: When initiated by master control unit, start a test sequence for each detector element that simulates standard-intruder movement within sensor's detection patterns, causing an alarm.

2.13 DURESS-ALARM SWITCHES

A. Manufacturers: Subject to compliance with requirements, provide products by one of the following:
   1. General Electric Company; GE Security, Inc.
   2. Honeywell International Inc.; Honeywell Security.
   3. Visonic Inc.
   4. Insert manufacturer
   5. or approved equal.

B. Description: A switch with a shroud over the activating lever that allows an individual to covertly send a duress signal to master control unit, with no visible or audible indication when activated. Switch shall lock in activated position until reset with a key.
   1. Minimum Switch Rating: 50,000 operations.
   2. Foot Rail: Foot activated, floor mounting.
   3. Push Button: Finger activated, suitable for mounting on horizontal or vertical surface.

2.14 VIDEO MOTION SENSORS (INTERIOR)

A. Manufacturers: Subject to compliance with requirements, provide products by one of the following:
   1. Aleph America Corporation.
   2. General Electric Company; GE Security, Inc.
   3. Visonic Inc.
   4. Insert manufacturer
   5. or approved equal.

B. Device Performance: Detect changes in video signal within a user-defined protected zone. Provide an alarm output for each video input.
   1. Detect movement within protected zone of standard intruders wearing clothing with a reflectivity that differs from that of background scene by a factor of 2. Reject all other changes in video signal.
   2. Modular design that allows for expansion or modification of number of inputs.
   3. Controls:
      a. Number of detection zones.
      b. Size of detection zones.
      c. Sensitivity of detection of each protected zone.
   4. Mounting: Standard 19-inch rack as described in EIA/ECA 310-E.

2.15 MASTER CONTROL UNIT

A. Manufacturers: Subject to compliance with requirements, provide products by one of the following:
   1. Bosch Security Systems, Inc.
   2. DAQ Electronics, Inc.
   3. Digital Security Controls, Inc.; a business unit of Tyco Safety Products.
   4. General Electric Company; GE Security, Inc.
   5. Honeywell International Inc.; Honeywell Security.
   6. Honeywell International Inc.; Honeywell Video Systems.
   7. Visonic Inc.
   8. Insert manufacturer
   9. or approved equal.

B. Description: Supervise sensors and detection subsystems and their connecting communication links, status control (secure or access) of sensors and detector subsystems, activation of alarms and supervisory and trouble signals, and other indicated functions.
   1. System software and programs shall be held in flash electrically erasable programmable read-only memory (EEPROM), retaining the information through failure of primary and secondary power supplies.
   2. Include a real-time clock for time annotation of events on the event recorder and printer.
   3. Addressable initiation devices that communicate device identity and status.
   4. Control circuits for operation of mechanical equipment in response to an alarm.

C. Construction: **[Freestanding equipment rack] [Desk-mounted console],** modular, with separate and independent alarm and supervisory system modules. **[Alarm-initiating protected zone boards shall be plug-in cards.]**Arrangements that require removal of field wiring for module replacement are unacceptable.

D. Comply with **[UL 609] [UL 1023] [UL 1076]**.

E. Console Controls and Displays: Arranged for interface between human operator at master control unit and addressable system components including annunciation and supervision. Display alarm, supervisory, and component status messages and the programming and control menu.
   1. Annunciator and Display: LCD, **[one] [two] [three] line(s) of [40] [80]** characters, minimum.
   2. Keypad: Arranged to permit entry and execution of programming, display, and control commands.

3. Control-Unit Network: Automatic communication of alarm, status changes, commands, and other communications required for system operation. Communication shall return to normal after partial or total network interruption such as power loss or transient event. Total or partial signaling network failures shall identify the failure and record the failure at the annunciator display and at the system printer.
4. Field Device Network: Communicate between the control unit and field devices of the system. Communications shall consist of alarm, network status, and status and control of field-mounted processors. Each field-mounted device shall be interrogated during each interrogation cycle.
5. Operator Controls: Manual switches and push-to-test buttons that do not require a key to operate. Prevent resetting of alarm, supervisory, or trouble signals while alarm or trouble condition persists. Include the following:
   a. Acknowledge alarm.
   b. Silence alarm.
   c. System reset.
   d. LED test.
   e. <Insert operator functions>.
6. Timing Unit: Solid state, programmable, 365 days.
7. Confirmation: Relays, contactors, and other control devices shall have auxiliary contacts that provide confirmation signals to system for their on or off status. Software shall interpret such signals, display equipment status, and initiate failure signals.
8. Alarm Indication: Audible signal sounds and an LED lights at master control unit identifying the **[protected zone] [addressable detector] originating the alarm.[Annunciator panel displays a common alarm light and sounds an audible tone.]**
9. Alarm Indication: Audible signal sounds and a plain-language identification of the **[protected zone] [addressable detector]** originating the alarm appears on **[LED] [or] [LCD]** display at master control unit**.[Annunciator panel displays a common alarm light and sounds an audible tone.]**
10. Alarm Indication: Audible signal sounds and a plain-language identification of the **[protected zone] [addressable detector]** originating the alarm appears on **[LED] [LCD] [or] [cathode-ray-tube] display at master control unit.[Annunciator panel alarm light and audible tone identify protected zone signaling an alarm.]**
11. Alarm activation sounds a **[bell] [siren] [strobe] [bell or siren and strobe]**.

F. Protected Zones: Quantity of alarm and supervisory zones as indicated, with capacity for expanding number of protected zones by a minimum of [25] <Insert number> percent.

G. Power Supply Circuits: Master control units shall provide power for remote power-consuming detection devices. Circuit capacity shall be adequate for at least a [25] <Insert number> percent increase in load.

H. **UPS: Comply with Section 263353 - Static Uninterruptible Power Supply. UPS shall be sized to provide a minimum of six hours of master control-unit operation.**

I. Cabinet: Lockable, steel enclosure arranged so operations required for testing, normal operation, and maintenance are performed from front of enclosure. If more than a single cabinet is required to form a complete control unit, provide exactly matching modular enclosures. Accommodate all components and allow ample gutter space for field wiring. Identify each enclosure by an engraved, laminated, phenolic-resin nameplate. Lettering on enclosure nameplate shall not be

less than 1 inch high. Identify, with permanent labels, individual components and modules within cabinets.

J. Transmission to Monitoring Station: A communications device to automatically transmit alarm, supervisory, and trouble signals to the monitoring station, operating over a standard voice grade telephone leased line. Comply with UL 1635.

K. Printout of Events: On receipt of signal, print alarm, supervisory, and trouble events. Identify zone, device, and function. Include type of signal (alarm, supervisory, or trouble) and date and time of occurrence. Differentiate alarm signals from all other printed indications. Also print system reset event, including same information for device, location, date, and time. Commands initiate the printing of a list of existing alarm, supervisory, and trouble conditions in the system and a historical log of events.

2.16 AUDIBLE AND VISUAL ALARM DEVICES

A. Manufacturers: Subject to compliance with requirements, provide products by one of the following:
   1. Alarm Controls Corporation.
   2. Cooper Wheelock.
   3. Edwards Signaling & Security Systems; part of GE Security.
   4. Honeywell International Inc.; Honeywell Security.
   5. Potter Electric Signal, LLC.
   6. Insert manufacturer
   7. or approved equal.

B. Bell: 10 inches in diameter, rated to produce a minimum sound output of 84 dB at 10 feet from master control unit.
   1. Enclosure: Weather-resistant steel box equipped with tamper switches on cover and on back of box.

C. Klaxon Weatherproof Motor-Driven Hooter: UL listed, rated to produce a minimum sound output of 120 dB at 3 feet, plus or minus 3 dB, at a frequency of 470 Hz. Rated for intermittent use: two minutes on and five minutes off.
   1. Designed for use in industrial areas and in high-noise, severe-weather marine environments.

D. Siren: 30-W speaker with siren driver, rated to produce a minimum sound output of 103 dB at 10 feet from master control unit.
   1. Enclosure: Weather-resistant steel box with tamper switches on cover and on back of box.

E. Strobe: Xenon light complying with UL 1638, with a clear polycarbonate lens.
   1. Light Output: 115 cd, minimum.
   2. Flash Rate: 60 per minute.

2.17 SECURITY FASTENERS

A. Operable only by tools produced for use on specific type of fastener by fastener manufacturer or other licensed fabricator. Drive system type, head style, material, and protective coating as required for assembly, installation, and strength.

B. Manufacturers: Subject to compliance with requirements, provide products by one of the following:
   1. Acument Global Technologies North America.

2. Safety Socket LLC.
3. Tamper-Pruf Screws.
4. Insert manufacturer
5. or approved equal.

C. Drive System Types: **[Pinned Torx-Plus] [pinned Torx] [or] [pinned hex (Allen)]**.

D. Socket Flat Countersunk Head Fasteners:
1. Heat-treated alloy steel, ASTM F835.
2. Stainless steel, ASTM F879, Group 1 CW.

E. Socket Button Head Fasteners:
1. Heat-treated alloy steel, ASTM F835.
2. Stainless steel, ASTM F879, Group 1 CW.

F. Socket Head Cap Fasteners:
1. Heat-treated alloy steel, ASTM A574.
2. Stainless steel, ASTM F837, Group 1 CW.

G. Protective Coatings for Heat-Treated Alloy Steel:
1. Zinc chromate, ASTM F1135, Grade 3 or Grade 4, for exterior applications and interior applications where indicated.
2. Zinc phosphate with oil, ASTM F1137, Grade I, or black oxide unless otherwise indicated.

PART 3 EXECUTION

3.1 EXAMINATION

A. Examine substrates, areas, and conditions, with Installer present, for compliance with requirements for installation tolerances and other conditions affecting performance of intrusion detection.

B. Examine roughing-in for embedded and built-in anchors to verify actual locations of intrusion detection connections before intrusion detection installation.

C. Prepare written report, endorsed by Installer, listing conditions detrimental to performance of intrusion detection.

D. Inspect built-in and cast-in anchor installations, before installing intrusion detection, to verify that anchor installations comply with requirements. Prepare inspection reports.
1. Remove and replace anchors where inspections indicate that they do not comply with requirements. Reinspect after repairs or replacements are made.
2. Perform additional inspections to determine compliance of replaced or additional anchor installations. Prepare inspection reports.

E. For material whose orientation is critical for its performance as a ballistic barrier, verify installation orientation.

F. Proceed with installation only after unsatisfactory conditions have been corrected.

3.2 SYSTEM INTEGRATION

A. Integrate intrusion detection system with the following systems and equipment:
1. Electronic door hardware.

2. Elevators.
3. Network lighting controls.
4. Intercommunications and program systems.
5. Public address and mass notification systems.
6. Access control.
7. Fire-alarm system.
8. Perimeter security system.
9. Video surveillance.

3.3 SYSTEM INSTALLATION

A. Comply with UL 681 and NFPA 731.

B. Equipment Mounting: Install master control unit on finished floor with tops of cabinets not more than 72 inches above the finished floor.
   1. Comply with requirements for seismic-restraint devices specified in Section 260548 - Vibration and Seismic Controls for Electrical Systems.

C. Install wall-mounted equipment, with tops of cabinets not more than 72 inches above the finished floor.
   1. Comply with requirements for seismic-restraint devices specified in Section 260548 - Vibration and Seismic Controls for Electrical Systems.

D. Connecting to Existing Equipment: Verify that existing perimeter security system is operational before making changes or connections.
   1. Connect new equipment to existing control panel in existing part of the building.
   2. Connect new equipment to existing monitoring equipment at the Supervising Station.
   3. Expand, modify, and supplement existing **[control] [monitoring]** equipment as necessary to extend existing **[control] [monitoring]** functions to the new points. New components shall be capable of merging with existing configuration without degrading the performance of either system.

E. Security Fasteners: Where accessible to inmates, install intrusion detection components using security fasteners with head style appropriate for fabrication requirements, strength, and finish of adjacent materials except that a maximum of two different sets of tools shall be required to operate security fasteners for Project.**[Provide stainless-steel security fasteners in stainless-steel materials.]**

3.4 WIRING INSTALLATION

A. Wiring Method: Install wiring in metal raceways according to Section 260533 - Raceways and Boxes for Electrical Systems. Conceal raceway except in unfinished spaces and as indicated. Minimum conduit size shall be 1/2 inch. Control and data transmission wiring shall not share conduit with other building wiring systems.

B. Wiring Method: Install wiring in metal raceways according to Section 260533 - Raceways and Boxes for Electrical Systems, except in accessible indoor ceiling spaces and in interior hollow gypsum board partitions where cable may be used. Conceal raceways and wiring except in unfinished spaces and as indicated. Minimum conduit size shall be 1/2 inch. Control and data transmission wiring shall not share conduit with other building wiring systems.

C. Wiring Method: Cable, concealed in accessible ceilings, walls, and floors when possible.

D. Wiring within Enclosures: Bundle, lace, and train conductors to terminal points. Use lacing bars and distribution spools. Separate power-limited and non-power-limited conductors as recommended in writing by manufacturer. Install conductors parallel with or at right angles to sides and back of enclosure. Connect conductors that are terminated, spliced, or interrupted in any enclosure associated with intrusion system to terminal blocks. Mark each terminal according to system's wiring diagrams. Make all connections with approved crimp-on terminal spade lugs, pressure-type terminal blocks, or plug connectors.

E. Wires and Cables:
   1. Conductors: Size as recommended in writing by system manufacturer unless otherwise indicated.
   2. 120-V Power Wiring: Install according to Section 260519 - Low-Voltage Electrical Power Conductors and Cables unless otherwise indicated.
   3. Control and Signal Transmission Conductors: Install unshielded, twisted-pair cable unless otherwise indicated or if manufacturer recommends shielded cable, according to Section 280513 - Conductors and Cables for Electronic Safety and Security.
   4. Data and Television Signal Transmission Cables: Install according to Section 280513 - Conductors and Cables for Electronic Safety and Security.

F. Splices, Taps, and Terminations: Make connections only on numbered terminal strips in junction, pull, and outlet boxes; terminal cabinets; and equipment enclosures.

G. Install power supplies and other auxiliary components for detection devices at control units unless otherwise indicated or required by manufacturer. Do not install such items near devices they serve.

H. Identify components with engraved, laminated-plastic or metal nameplate for master control unit and each terminal cabinet, mounted with corrosion-resistant screws. Nameplates and label products are specified in Section 260553 - Identification for Electrical Systems.

3.5 IDENTIFICATION

A. Identify system components, wiring, cabling, and terminals. Comply with identification requirements in Section 260553 - Identification for Electrical Systems.

B. Install instructions frame in a location visible from master control unit.

3.6 GROUNDING

A. Ground the master control unit and associated circuits; comply with IEEE 1100. Install a ground wire from main service ground to master control unit.

B. Ground system components and conductor and cable shields to eliminate shock hazard and to minimize ground loops, common-mode returns, noise pickup, cross talk, and other impairments.

C. Signal Ground Terminal: Locate at main equipment rack or cabinet. Isolate from power system and equipment grounding. Provide 5-ohm ground. Measure, record, and report ground resistance.

D. Install grounding electrodes of type, size, location, and quantity indicated. Comply with installation requirements in Section 260526 - Grounding and Bonding for Electrical Systems.

3.7 FIELD QUALITY CONTROL

A. Pretesting: After installation, align, adjust, and balance system and perform complete pretesting to determine compliance of system with requirements in the Contract Documents. Correct deficiencies observed in pretesting. Replace malfunctioning or damaged items with new ones and retest until satisfactory performance and conditions are achieved. Prepare forms for systematic recording of acceptance test results.
   1. Report of Pretesting: After pretesting is complete, provide a letter certifying that installation is complete and fully operable; include names and titles of witnesses to preliminary tests.

B. Testing Agency: **[Owner will engage] [Engage]** a qualified testing agency to perform tests and inspections.

C. Manufacturer's Field Service: Engage a factory-authorized service representative to inspect, test, and adjust components, assemblies, and equipment installations, including connections.

D. Perform tests and inspections.
   1. Manufacturer's Field Service: Engage a factory-authorized service representative to inspect components, assemblies, and equipment installations, including connections, and to assist in testing.

E. Tests and Inspections: Comply with provisions in NFPA 731, Ch. 9, "Testing and Inspections."
   1. Inspection: Verify that units and controls are properly labeled and interconnecting wires and terminals are identified.
   2. Test Methods: Intrusion detection systems and other systems and equipment that are associated with detection and accessory equipment shall be tested according to Table "Test Methods" and Table "Test Methods of Initiating Devices."

F. Documentation: Comply with provisions in NFPA 731, Ch. 4, "Documentation."

G. Tag all equipment, stations, and other components for which tests have been satisfactorily completed.

3.8 ADJUSTING

A. Occupancy Adjustments: When requested within [12] <Insert number> months of date of Substantial Completion, provide on-site assistance in adjusting system to suit actual occupied conditions. Provide up to [three] <Insert number> visits to Project during other-than-normal occupancy hours for this purpose.[Visits for this purpose shall be in addition to any required by warranty.]

3.9 DEMONSTRATION

A. Engage a factory-authorized service representative to assist Contractor and train Owner's maintenance personnel to adjust, operate, and maintain the intrusion detection system. Comply with documentation provisions in NFPA 731, Ch. 4, "Documentation and User Training."
   1. Schedule training with Owner, through DEN Project Manager, with at least seven (7) days advance notice.

PART 4 MEASUREMENT

4.1 METHOD OF MEASUREMENT

A. No separate measurement shall be made for work under this Section.

PART 5 PAYMENT

5.1 PAYMENT

A. No separate payment will be made for work under this Section. The cost of the work described in this Section shall be included in the Lump Sum Contract price.

END OF SECTION

SECTION 282300 - VIDEO SURVEILLANCE

PART 1 GENERAL

1.1 RELATED DOCUMENTS

A. Drawings and general provisions of the Contract, including General and Special Conditions and Division 01 Specification Sections, apply to this Section.

1.2 SUMMARY

A. This Contractor shall provide all skilled labor, material, and equipment for the complete installation of the Video Surveillance System additions and modifications as shown on the drawings and specified herein. The Video Surveillance System on this Project is an extension of the existing Genetec Omnicast 4.8 system. The Contractor shall acquire from the manufacturer the installation practices as published by the Manufacturer. Work includes:
   1. IP Cameras.
   2. Cabling.

B. Video surveillance system shall be integrated with monitoring and control system specified in Section 281300 - Access Control, which specifies systems integration.

C. The Contractor shall be responsible to provide a complete installation in compliance with Owner requirements, City Building Codes, and City Fire Prevention Bureau requirements. Owner will perform all required headend programming. Testing shall be performed jointly by the Contractor, Owner and the Communications Contractor. Refer to the Responsibility Matrix detailed in the Contract Drawings for further clarification regarding the delineation in the scope of work. Coordinate all work through the Owner Project Manager.

D. Alternates: Refer to Division 01 Section 012300 - Alternates for description of Work in this Section affected by Alternates.

E. Refer to Low Voltage Responsibility Matrix provided on cover sheet of drawings for additional procurement and installation responsibilities.

1.3 ACTION SUBMITTALS

A. Refer to Section 013300 - Submittal Requirements for submittal procedures.

B. Product Data: For each type of product.
   1. Include data substantiating that materials comply with requirements.

C. Shop Drawings: For video surveillance. Include plans, elevations, sections, details, and attachments to other work.
   1. Functional Block Diagram: Show single-line interconnections between components for signal transmission and control. Show cable types and sizes.
   2. Wiring Diagrams: For power, signal, and control wiring.

1.4 INFORMATIONAL SUBMITTALS

A. Field quality-control reports.

B. Warranty: Sample of special warranty.

1.5 CLOSEOUT SUBMITTALS

A. Operation and Maintenance Data: In addition to items specified in Section 017823 "Operation and Maintenance Data," include the following:
   1. Hard copies of manufacturer's specification sheets and PDF files on CD-ROM of the hard-copy submittal.
   2. Include letter from manufacturer's representative stating that system is operational.

B. Equipment List: Include every piece of equipment by model number, manufacturer, serial number, location, and date of original installation. Add pretesting record of each piece of equipment, listing name of person testing, date of test, set points of adjustments, name, and description of the view of preset positions, description of alarms, and description of unit output responses to an alarm.

C. As-Built Plans: Submit complete as-built plans of all Work, including interface with other Work, in accordance with requirements as specified in Section 013300 "Submittal Procedures".
   1. Contractor shall maintain on site accurate as-built drawings indicating dimensioned locations of constructed raceway, box, and device locations. Any modifications to work depicted on the Engineered shop drawings shall be noted. Documents shall be updated daily and shall at all times be available for Owner and Engineer review.

1.6 MAINTENANCE MATERIAL SUBMITTALS

A. Furnish extra materials that match products installed and that are packaged with protective covering for storage and identified with labels describing contents.

1.7 QUALITY ASSURANCE

A. Electrical Components, Devices, and Accessories: Listed and labeled as defined in NFPA 70, by a qualified testing agency, and marked for intended location and application.

B. Comply with NECA 1.

C. Comply with NFPA 70.

D. Contractor shall be fully responsible for daily quality control of all system installation, coordination with trades, and coordination with Owner Security and Owner Maintenance.

E. Installer Qualifications: Company with factory-trained and certified personnel specializing in digital closed circuit television systems with three (3) years' documented experience as a digital CCTV installing contractor.

1.8 PROJECT CONDITIONS

A. Environmental Conditions: Capable of withstanding the following environmental conditions without mechanical or electrical damage or degradation of operating capability:
   1. Control Station: Rated for continuous operation in ambient temperatures of 60 to 85 deg F (16 to 29 deg C) and a relative humidity of 20 to 80 percent, noncondensing.
   2. Interior, Controlled Environment: System components, except central-station control unit, installed in air-conditioned, temperature-controlled interior environments shall be rated for continuous operation in ambient temperatures of 36 to 122 deg F (2 to 50 deg C) dry bulb and 20 to 90 percent relative humidity, noncondensing. Use NEMA 250, Type 1 enclosures.

3. Interior, Uncontrolled Environment: System components installed in non-air-conditioned, temperature-controlled interior environments shall be rated for continuous operation in ambient temperatures of 0 to 122 deg F (minus 18 to plus 50 deg C) dry bulb and 20 to 90 percent relative humidity, noncondensing. Use NEMA 250, Type 3R, Type 4, Type 12, Type 12K enclosures.
4. Exterior Environment: System components installed in locations exposed to weather shall be rated for continuous operation in ambient temperatures of minus 30 to plus 122 deg F (minus 34 to plus 50 deg C) dry bulb and 20 to 90 percent relative humidity, condensing. Rate for continuous operation when exposed to rain as specified in NEMA 250, winds up to 85 mph (137 km/h) and snow cover up to 24 inches (610 mm) thick. Use NEMA 250, Type 3, Type 3R, Type 3S, Type 4, Type 4X enclosures.
5. Hazardous Environment: System components located in areas where fire or explosion hazards may exist because of flammable gases or vapors, flammable liquids, combustible dust, or ignitable fibers shall be rated, listed, and installed according to NFPA 70.
6. Corrosive Environment: System components subject to corrosive fumes, vapors, and wind-driven salt spray in coastal zones. Use NEMA 250, Type 4X, Type 6P enclosures.
7. Security Environment: Camera housing for use in high-risk areas where surveillance equipment may be subject to physical violence.

1.9 DELIVERY, STORAGE, AND HANDLING

A. All products:
   1. Store in temperature-controlled environment in original manufacturer's sealed containers. Maintain ambient temperature between 50 and 85 deg F (10 and 30 deg C).
   2. Open each container; verify contents against packing list; and file copy of packing list, complete with container identification, for inclusion in operation and maintenance data.
   3. Save original manufacturer's containers and packing materials and deliver as directed under provisions covering extra materials.

1.10 WARRANTY

A. Special Warranty: Manufacturer's standard form in which manufacturer agrees to repair or replace components of cameras, equipment related to camera operation, and control-station equipment that fail in materials or workmanship within specified warranty period. See Section 270500 for additional warranty requirements.
   1. Warranty Period: Minimum three (3) years from date of Substantial Completion.
   2. Warranty service shall be provided by a trained specialist of the equipment manufacturer, who shall be based in a fully staffed, fully stocked (replacement parts and test equipment) office, located within 50 miles of the site.

1.11 CONSTRUCTION WASTE MANAGEMENT

A. Construction waste shall be managed in accordance with provisions of Section 017419 "Construction Waste Management and Disposal". Documentation shall be submitted to satisfy the requirements of that Section.

PART 2 PRODUCTS

2.1 GENERAL

A. All equipment and materials used shall be new, standard components, regularly manufactured, regularly utilized in the manufacturer's system.

B. All systems and components shall have been thoroughly tested and proven in actual use.

2.2 CAMERAS

A. General Requirements
   1. Power: POE preferred. Refer to specified models for individual requirements and drawings for additional information. For POE+ and UPOE coordinate with engineer and Owner project manager. Contractor shall verify voltage requirements for all cameras, prior to shop drawing submittal, based on the camera power requirements as well as directions on the plans and schedules. No additional compensation will be provided due to failure of compliance with requirements.
   2. Video: H.264 required, motion JPEG capable.
   3. Network:
      a. IPv4/v6, HTTP, HTTPS, SSL/TLS, SMTP, SNMP
      b. Multi-level password, IP filter, HTTPS encryption, IEEE 802.1x
   4. Audio – Not required at all locations. Refer to specified models for standard and drawings for additional information.
   5. Environment – Location specific
   6. Mounting – Surface, wall, ceiling, corner, parapet, or other as shown on drawings. Coordinate camera mounting with the architectural ceiling plans, sections and elevations. Provide all mounting hardware including trim and flanges to complete the installation.

B. Approved cameras: As manufactured by AXIS Communications or approved equal. See below for procedure required to submit product for approval as equal. The model number indicates the type of camera with its minimum requirements and does not include accessories required or environment intended (indoor, outdoor, industrial, etc.) Standard cameras used at the City are as follows.
   1. Fixed dome: P3245 LV(E) MK II
   2. PTZ dome: Q6075-E (Exterior)
   3. PTZ dome: Q6075 (Interior)
   4. Multi-sensor (180): P3807-PVE (4 sensor)
   5. Panoramic (360): M3007-P
   6. Panoramic (360): M3057-PLVE (Exterior)
   7. Panoramic (360) with audio: M3037-PVE
   8. Panoramic (360): M3047-P (Interior)
   9. Multidirectional (360): P3717-PLE

C. Contractor shall submit shop drawings for the cameras indicating all required accessories as shown on the drawings and in the specifications. Whether specified by the catalog numbers or not, the contractor shall provide all components, hardware and related items to provide a complete and operational system to meet the requirements as specified in the drawings and specifications.

D. A product from a manufacturer no listed may be submitted for approval during the shop drawing phase. Requests for substitutions will not be approved after the shop drawing phase. The product must be equal in physical attributes, and meet or exceed quality and performance requirements, without exceeding the capabilities of existing infrastructure. The A/E's determination for the approval shall govern. Provide complete detail of the proposed equal camera with a detailed comparison to the specified camera including any additional information requested by the A/E. Prototype products shall not be submitted for approval as equal to specified products.

2.3 CABLES

A. General Cable Requirements: Comply with requirements in Section 280513 "Conductors and Cables for Electronic Safety and Security" and as recommended by system manufacturer for integration requirement.

B. Cable conductors shall be stranded copper. Provide cable with chrome gray PVC jacket and UL-CMP listing.

C. Approved Manufacturers: Subject to compliance with requirements, provide one of the following:
   1. Belden, West Penn.
   2. Approved equal.

PART 3 EXECUTION

3.1 PREPARATION

A. The Contractor shall coordinate and arrange a pre work meeting with the Owner Project Manager, Owner Security, and Owner Technical Maintenance one (1) week in advance of the beginning of any work. The Owner Project Manager shall review the Contractor's construction demolition, phasing, implementation, and testing plans and schedule.

B. Meeting Notes: Meeting notes shall be accurately recorded by the Owner Project Manager and distributed within five (5) working days after the meeting.

3.2 EXAMINATION

A. Examine pathway elements intended for cables. Check raceways and other elements for compliance with space allocations, installation tolerance, hazards to camera installation, and other conditions affecting installation.

B. Examine roughing-in for LAN, WAN, and IP network before device installation.

C. Proceed with installation only after unsatisfactory conditions have been corrected.

3.3 GENERAL

A. Installation shall be supervised and tested by a representative of the manufacturer of the system equipment. The Work shall be performed by skilled technicians under the direction of experienced engineers, all of whom shall be properly factory trained and qualified for this Work.

B. Raceways: Raceways shall be installed in accordance with Section 280528 "Pathways for Electronic Safety and Security".

C. Wire and Cable: All wiring and cable shall be installed in metal raceways or within equipment. Splices shall not be allowed. Conductors within equipment enclosures shall be carefully cabled and laced. Individual cables shall be tagged with markers indicating circuit number and type. Markers shall be used and numbered according to Cabling Schedule with cable numbers on all conductors at each outlet or pull box at each equipment enclosure.

3.4 CABLING

A. Comply with NECA 1, "Good Workmanship in Electrical Construction."

B. Install cables and wiring according to requirements in Section 280513 - Conductors and Cables for Electronic Safety and Security.

C. Wiring Method: Install wiring in raceway except within consoles, cabinets, desks, and counters. Conceal raceway and wiring except in unfinished spaces.

3.5 GROUNDING

A. Comply with Section 260526 - Grounding and Bonding for Electrical Systems.

B. Comply with IEEE 1100, "Recommended Practice for Power and Grounding Electronic Equipment."

C. Ground cable shields, drain conductors, and equipment to eliminate shock hazard and to minimize ground loops, common-mode returns, noise pickup, cross talk, and other impairments.

D. Bond shields and drain conductors to ground at only one point in each circuit.

E. Signal Ground:
   1. Terminal: Locate in each equipment room and wiring closet; isolate from power system and equipment grounding.
   2. Bus: Mount on wall of main equipment room with standoff insulators.
   3. Backbone Cable: Extend from signal ground bus to signal ground terminal in each equipment room and wiring closet.

3.6 VIDEO SURVEILLANCE SYSTEM INSTALLATION

A. Install cameras level and plumb.

B. Set pan unit and pan-and-tilt unit stops to suit final camera position and to obtain the field of view required for camera. Connect all controls and alarms and adjust.

C. Install power supplies and other auxiliary components unless otherwise indicated.

D. Identify system components, wiring, cabling, and terminals according to Section 260553 - Identification for Electrical Systems.

E. Contractor shall coordinate with Owner Project Manager and Owner IT for coordinating IP addresses for all camera activations.

3.7 INTERFACE WITH OTHER SYSTEMS

A. Interface programming of closed circuit television system with computerized card access system shall be by Owner Maintenance and Owner Security. Coordinate all Work through Owner Project Manager.

3.8 IDENTIFICATION

A. In addition to requirements in this article, comply with applicable requirements in Section 260553 "Identification for Electrical Systems" and with TIA 606-C.

B. Label each terminal strip and screw terminal in each cabinet, rack, or panel.
   1. All wiring conductors connected to terminal strips shall be individually numbered, and each cable or wiring group being extended from a panel or cabinet to a building-mounted device shall be identified with the name and number of the particular device as shown.
   2. Each wire connected to building-mounted devices is not required to be numbered at the device if the color of the wire is consistent with the associated wire connected and numbered within the panel or cabinet.

3.9 FIELD QUALITY CONTROL

A. Perform tests and inspections.
   1. Manufacturer's Field Service: Engage a factory-authorized service representative to inspect components, assemblies, and equipment installations, including connections, and to assist in testing.

B. Field of Views (FOV's).
   1. Installation contractor shall provide field of view video shots for all cameras for review and approval by Owner Security. Contractor shall make all adjustments necessary until view is formally approved and signed off on. Contractor shall provide a written approval form for documented sign off process.

C. Tests and Inspections:
   1. Inspection: Verify that units and controls are properly installed, connected, and labeled, and that interconnecting wires and terminals are identified.
   2. Pretesting: Align and adjust system and pretest components, wiring, and functions to verify that they comply with specified requirements. Conduct tests at varying lighting levels, including day and night scenes as applicable. Prepare video-surveillance equipment for acceptance and operational testing as follows:
      a. Verify operation of auto-iris lenses.
      b. Set back-focus of fixed focal length lenses. At focus set to infinity, simulate nighttime lighting conditions by using a dark glass filter of a density that produces a clear image. Adjust until image is in focus with and without the filter.
      c. Set back-focus of zoom lenses. At focus set to infinity, simulate nighttime lighting conditions by using a dark glass filter of a density that produces a clear image. Additionally, set zoom to full wide angle and aim camera at an object 50 to 75 feet (17 to 23 m) away. Adjust until image is in focus from full wide angle to full telephoto, with the filter in place.
      d. Set and name all preset positions; consult Owner's personnel.
      e. Set sensitivity of motion detection.
      f. Connect and verify responses to alarms.
      g. Verify operation of control-station equipment.
   3. Test Schedule: Schedule tests after pretesting has been successfully completed and system has been in normal functional operation for at least 14 days. Provide a minimum of 10 days' notice of test schedule.

4. Operational Tests: Perform operational system tests to verify that system complies with Specifications. Include all modes of system operation. Test equipment for proper operation in all functional modes.
5. A representative of the installing Contractor shall submit a written report of the findings to the Owner Project Manager. Representative shall be factory trained and certified and have at least three (3) years' experience installing access control systems.
    a. Report shall consist of a complete listing of every device and feature, the date it was tested and by whom, the results, and the date retested (if failure occurred during any previous tests). The final test reports shall indicate that every device tested successfully. Submit two typed copies of the test reports in a neatly bound folder to the Owner Project Manager for approval. Failure to comply will result in a delay of final testing and acceptance.
6. Design engineer and Owner Project Manager will witness all field tests.

D. Video surveillance system will be considered defective if it does not pass tests and inspections.

E. Prepare test and inspection reports.

3.10 CLEANING

A. Clean installed items using methods and materials recommended in writing by manufacturer.

PART 4 MEASUREMENT

4.1 METHOD OF MEASUREMENT

A. Percent of work complete shall be the method for measuring progress.

PART 5 PAYMENT

5.1 METHOD OF PAYMENT

A. Percent of work complete based on the approved schedule of values.

END OF SECTION

SECTION 283100 - FIRE DETECTION AND ALARM

PART 1 – GENERAL

1.1 SUMMARY

A. Section includes fire alarm control panels, manual fire alarm stations, automatic smoke and heat detectors, fire alarm signaling appliances, and auxiliary fire alarm equipment and power and signal wire and cable.

1.2 RELATED SECTIONS:

A. Section 087100 - Door Hardware: Door closers, electric locks, electric releases.

B. Section 260519 - Low-Voltage Electrical Power Conductors and Cables.

C. Section 260526 - Grounding and Bonding for Electrical Systems.

1.3 REFERENCES

A. National Fire Protection Association:
   1. NFPA 72 - National Fire Alarm Code.

1.4 SYSTEM DESCRIPTION

A. Division 283100 is a performance specification. The Contractor shall include all labor and materials to design and complete the entire fire alarm work as herein specified and/or indicated.

B. The fire alarm system shall be a voice alarm communications system.

C. The Contractor is to serve as the complete system designer and installer. A complete fire alarm system shall be designed, furnished, and installed by the Contractor including locations, types, and quantities of all devices, monitoring devices, and equipment required. Contractor's design shall be based on all bid documents, including but not limited to Electrical, Telecom, Mechanical, Fire Sprinkler, Kitchen, Architectural, and Structural documents. Contractor shall provide all devices, modules, etc. for a complete operating system as required by all applicable Codes and AHJ requirements. Therefore, it is the Contractor's responsibility to include in the bid price the complete design and installation of all devices (whether shown or not), wiring, head end equipment, etc. to meet the applicable code and AHJ requirements. The Fire Alarm System is indicated on the drawings and specifications in either criteria or schematic form only.

D. Fire Alarm System: NFPA 72, addressable and automatic local fire alarm system with connections to central station.

E. Alarm Sequence of Operation: Actuation of initiating device causes the following system operations:
   1. Local fire alarm signaling devices sound and display with signal.
   2. Non-coded signal transmits to central station.
   3. Signal transmits to building mechanical controls, shutting down fans and operating dampers.

F. Drill Sequence of Operation: Manual drill function causes alarm mode sequence of operation.

G. Trouble Sequence of Operation: System or circuit trouble causes the following system operations:
   1. Visual and audible trouble alarm indicates at fire alarm control panel.
   2. Visual and audible trouble alarm indicates at remote annunciator panel.

3. Trouble signal transmits to central station.

1.5 SUBMITTALS

A. Refer to Section 013300 - Submittal Requirements for submittal procedures.

B. General Conditions: Submittal procedures.

C. Shop Drawings: Indicate system wiring diagram showing each device and wiring connection; indicate annunciator layout, and design calculations.

D. Product Data: Submit catalog data showing electrical characteristics and connection requirements.

E. Test Reports: Indicate procedures and results for specified field testing and inspection.

F. Manufacturer's Field Reports: Indicate activities on site, adverse findings, and recommendations.

G. Contractor shall submit to the AHJ. Include all associated costs, fees, drawings, cut sheets, calculations for a complete submittal in bid price.

H. Contractor shall submit copies of installing company licensure, and individuals responsible on project site responsible for installation of all fire alarm devices and cabling. All individuals on site shall be at a minimum, NICET II certified and State of Nevada 'F-card' holders.

1.6 CLOSEOUT SUBMITTALS

A. General Conditions: Closeout procedures.

B. Project Record Documents: After construction "as-built" drawings shall be provided to the School District. "As-built" drawings shall be as specified in Part 1 of these Guidelines. No marked "jobsite copies" will be allowed. As-built drawings shall show all devices connected to the system as well as any junction boxes and conduit routing over 2" in diameter. Record drawings shall also show device address and labeling of each device as programmed in the fire alarm system.

C. Operation and Maintenance Data: Submit manufacturer's standard operating and maintenance instructions.

1.7 QUALITY ASSURANCE

A. Provide wiring materials located in plenums with peak optical density not greater than 0.5, average optical density not greater than 0.15, and flame spread not greater than 5 feet (1.5 m) when tested in accordance with NFPA 262.

1.8 QUALIFICATIONS

A. Manufacturer: Company specializing in manufacturing products specified in this section with minimum three years documented experience, and with service facilities within 100 miles of project.

B. Installer: Certified fire alarm installer with service facilities within 100 miles of Project.

C. Design fire alarm under direct supervision of Professional Engineer or NICET II certification experienced in design of this Work and licensed in State of NV.

1.9 MAINTENANCE SERVICE

A. General Conditions: Maintenance service.

B. Furnish service and maintenance of fire alarm equipment for one year from Date of Substantial Completion.

1.10 MAINTENANCE MATERIALS

A. General Conditions: Spare parts and maintenance products.

B. Furnish 2 keys of each type.

1.11 EXTRA MATERIALS

A. General Conditions: Spare parts and maintenance products.

B. Furnish three of each type of automatic smoke detector without base.

PART 2 - PRODUCTS

2.1 CONTROL PANEL

A. Manufacturers:
   1. Notifier
   2. Gamewell-FCI
   3. Firelite
   4. EST/GE
   5. Or equal
   6. Amplifier cabinet shall be integral to main fire alarm control panel and provided with all components to facilitate the calculated speaker wattage and ampacity, plus an additional 25%. Provide additional amplifiers based on the design/build contractor layout and device spacing for NFPA 72 required audibility levels.

2.2 MANUAL FIRE ALARM STATIONS

A. Product Description: Manual double-action station. Provide with STI Stopper® II with Horn or equivalent (clear, tamperproof polycarbonate cover with sounder) where pull stations are accessible to public.

B. Mounting: Semi-Flush.

C. Backbox: Manufacturer's standard.

2.3 CEILING SMOKE DETECTOR

A. Product Description: NFPA 72, addressable photoelectric type ceiling smoke detector with the following features:
   1. Adjustable sensitivity.
   2. Plug-in base.
   3. Visual indication of detector actuation.

B. Mounting: 4 inch (102 mm) outlet box.

C. Furnish two-wire detector with common power supply and signal circuits.

2.4 DUCT-MOUNTED SMOKE DETECTOR

A. Product Description: NFPA 72, addressable with the following features:
   1. Auxiliary SPDT relay contact.
   2. Key-operated normal-reset-test switch.
   3. Duct sampling tubes extending width of duct.
   4. Visual indication of detector actuation.
   5. Duct-mounted housing.

B. Furnish two-wire detector with common power supply and signal circuits. Furnish relay (integral or separate) for shutdown of associated unit.

2.5 NOTIFICATION DEVICES (SPEAKER, STROBE, SPEAKER/STROBE COMBINATION)

A. Provide low profile WHITE devices with red lettering where required. Devices shall be semi-flush and ceiling or wall mounted. Manufactured by System Sensor or UL approved equal compatible with fire alarm system head-end.

2.6 REMOTE ANNUNCIATOR

A. Product Description: Remote annunciator including audible and visual indication of fire alarm by zone, and audible and visual indication of system trouble.

B. Mounting: Factory mounted in flush wall-mounted enclosure.

2.7 WIRE AND CABLE

A. Cable located in Plenums: Power limited fire-protective signaling cable classified for fire and smoke characteristics, copper conductor, 300 volts insulation rated 105 degrees C, suitable for use in air handling ducts, hollow spaces used as ducts, and plenums.

B. All fire alarm conductors routed underground shall be wet location rated (Windy City Wire ‘WaterWarrior’ or equal). All conduits where located under slab are considered ‘underground’.

PART 3 - EXECUTION

3.1 EXAMINATION

A. General Conditions: Coordination and project conditions.

B. Verify products and systems receiving devices are ready for installation.

3.2 INSTALLATION

A. Install manual station with operating handle 48 inches above floor.

B. Install audible and visual signal devices 80 inches above floor to bottom of device.

C. Install 16 AWG minimum size conductors for fire alarm detection and signal circuit conductors in conduit.

D. Connect conduit and wire sprinkler flow switches, sprinkler valve tamper switches, fire suppression system control panels, and duct smoke detectors.

E. Automatic Detector Installation: Conform to NFPA 72.

F. Install engraved plastic nameplates in accordance with Specifications on all panels and equipment.

G. Ground and bond fire alarm equipment and circuits in accordance with Section 260526.

H. Fire Alarm Junction Boxes shall be painted RED with labeling indicating circuiting inside junction box, such as “FIRE ALARM – STROBE - BPS 2 CIRCUIT 1”.

3.3 FIELD QUALITY CONTROL

A. General Conditions: Field inspecting, testing, adjusting, and balancing.

B. Test in accordance with NFPA 72 and local fire department requirements.

3.4 MANUFACTURER'S FIELD SERVICES

A. General Conditions: Manufacturer’s field services.

B. Include services of certified technician to supervise installation, adjustments, final connections, and system testing.

3.5 DEMONSTRATION AND TRAINING

A. Furnish 4 hours of instruction each for two persons, to be conducted at project site with manufacturer's representative.

END OF SECTION

SECTION 311000 - SITE CLEARING

PART 1 GENERAL

1.1 SUMMARY:

A. This Section includes the following: Site Clearing. Site Clearing shall consist of the felling, trimming and cutting into sections any on-site trees not designated by the Engineer to be reused and relocated, and the satisfactory disposal of those trees, other vegetation not designated to remain, downed timber, snags, brush, fences, concrete, asphalt and rubbish occurring within the areas to be cleared. Remove root system of trees, stumps, brush and vegetation in areas to be cleared, except for trees and vegetation indicated or directed to be left standing.

B. Disposal of Cleared Materials: All cleared material will become the property of the Contractor and will be disposed of off-site as shown on the Plans, and as specified in these Specifications, or as specified by the Engineer, including the removal and disposal of all the resulting material.

1.2 MATERIAL OWNERSHIP:

A. Except for stripped topsoil or other materials indicated to remain Owner's property, cleared materials shall become Contractor's property and shall be removed from Project site.

1.3 PROJECT CONDITIONS:

A. Traffic: Minimize interference with adjoining roads, streets, walks, and other adjacent occupied or used facilities during site-clearing operations.
   1. Do not close or obstruct streets, walks, or other adjacent occupied or used facilities without permission from Owner and authorities having jurisdiction.
   2. Driveways, Drive aisles and Walks: Keep Driveways, Drive aisles and walks, designated to remain, free of dirt and debris at all times.
   3. Provide alternate routes around closed or obstructed traffic ways if required by authorities having jurisdiction.
   4. Utility Manhole and Valves: Remove existing collars as needed to lower existing manholes or valves located within the clearing area. The manholes or valves should be lowered below grade and covered with a temporary cover. The Contractor will responsible for any reference surveying required to raise or lower the existing utility.
   5. Salvable Improvements: Carefully remove items indicated to be salvaged and store on Owner's premises where indicated.
   6. Utility Locator Service: The contractor shall hire a private utility locator prior to the start of project to perform utility locates.
   7. Do not commence site clearing operations until temporary erosion and sedimentation control measures are in place.

PART 2 PRODUCTS - NOT APPLICABLE

PART 3 EXECUTION

3.1 PREPARATION:

A. Protect and maintain benchmarks and survey control points from disturbance during construction.

1. Locate and clearly flag trees and vegetation to remain or to be relocated.
2. Protect existing site improvements to remain from damage during construction.
   a. Restore damaged improvements to their original condition, as acceptable to Owner.

3.2 TEMPORARY EROSION AND SEDIMENTATION CONTROL:

A. Provide temporary erosion and sedimentation control measures to prevent soil erosion and discharge of soil-bearing water runoff or airborne dust to adjacent properties and walkways, according to Truckee Meadows Construction Site Best Management Practices (BMP) Handbook.

B. Inspect, repair, and maintain erosion and sedimentation control measures during construction until permanent vegetation has been established.

C. Remove erosion and sedimentation controls and restore and stabilize areas disturbed during removal.

3.3 TREE PROTECTION:

A. Erect and maintain temporary fencing around tree protection zones before starting site clearing. Remove fence when construction is complete.

B. Do not excavate within tree protection zones, unless otherwise indicated.

C. Repair or replace trees and vegetation indicated to remain that are damaged by construction operations, in a manner approved by Architect.

3.4 UTILITIES:

A. Locate, identify, disconnect, and seal or cap off utilities indicated to be removed.
   1. Contractor to coordinate utility shutoffs with State Public Works Division.

B. Existing Utilities: Do not interrupt utilities serving facilities occupied by Owner or others unless permitted under the following conditions and then only after arranging to provide temporary utility services according to requirements indicated:
   1. Notify Owner not less than two days in advance of proposed utility interruptions.
   2. Do not proceed with utility interruptions without Owner's written permission.

C. Removal of underground utilities is included in Division 26 and/or 33, Sections covering site utilities.

3.5 CLEARING AND GRUBBING:

A. Fill depressions caused by clearing and grubbing operations with satisfactory soil material unless further excavation or earthwork is indicated.
   1. Place fill material in horizontal layers not exceeding a loose depth of 8 inches, and compact each layer to a density equal to adjacent original ground.

3.6 TOPSOIL STRIPPING:

A. Remove sod and grass before stripping topsoil.

B. Strip topsoil to whatever depths are encountered in a manner to prevent intermingling with underlying subsoil or other waste materials.

C. Stockpile topsoil materials away from edge of excavations without intermixing with subsoil. Grade and shape stockpiles to drain surface water. Cover to prevent windblown dust.

3.7 SITE IMPROVEMENTS:

A. Remove existing above- and below-grade improvements as indicated and as necessary to facilitate new construction.

3.8 DISPOSAL:

A. Disposal: Remove surplus soil material, unsuitable topsoil, obstructions, demolished materials, and waste materials including trash and debris, and legally dispose of them off Owner's property.
   1. Separate recyclable materials produced during site clearing from other non-recyclable materials. Store or stockpile without intermixing with other materials and transport them to recycling facilities.

END OF SECTION

SECTION 312000 - EARTH MOVING

PART 1 GENERAL

1.1 SUMMARY:

A. This Section includes the following:
   1. Preparing subgrades for slabs-on-grade and pavements.

1.2 APPLICABLE PUBLICATIONS:

A. The publications listed below form a part of this specification to the extent referenced. The publications are referred to in the text by the basic designation only.
   1. Standard Specifications for Public Works Construction (“Orange Book”); the latest edition.

1.3 DESCRIPTION:

A. The work includes performing site preparation, excavation, borrow, filling, backfilling, compacting, and rough grading necessary to construct the grades indicated for subgrade of pavements and other on-grade slabs or site work. The Contractor will grade the site to finished sub-grade to within 0.1 foot.
   1. Reference Standard Specifications: Materials and workmanship specified herein shall be in accordance with the Standard Specifications for Public Works Construction, except as modified herein. Where the term "Architect" is used, it shall mean the Engineer.

1.4 DEFINITIONS:

A. Backfill: Material used in refilling a cut or other excavation.

B. Capillary Water Barrier: A layer of clean, poorly graded crushed rock, stone, or natural sand or gravel having a high porosity which is placed beneath a building slab with or without a vapor barrier to cut off the capillary flow of pore water to the area immediately below a slab.

C. Cohesive Materials: Cohesive materials include materials classified by ASTM D2487 as GC, SC, ML, CL, MH, and CH. Materials classified as GM and SM will be identified as cohesive only when fines have a plasticity index greater than zero.

D. Cohesionless Materials: Cohesionless materials include materials classified by ASTM 2487 as GW, GP, SW, and SP. Materials classified as GM and SM will be identified as cohesionless only when the fines have a plasticity index of zero.

E. Compaction: The process of mechanically stabilizing a material by increasing its density at a controlled moisture condition. "Degree of Compaction" is expressed as a percentage of the maximum density obtained by the test procedure described in ASTM D1557 for general soil types abbreviated in this specification as "90 percent ASTM D1557 maximum density."

F. Common Fill: Common fill shall be placed in all embankment areas located in non-construction outside of structural areas.

G. Engineered Fill: Engineered fill shall be placed in all embankment construction within structure footprint, extending at least 5 feet outside of the building perimeter.

H. Crushed Rock Sub-grade: A layer of compacted crushed rock that replaces the in-place existing material to provide a stable, uniform bearing foundation for further construction.

I. Embankment: A "fill" having a top that is higher than adjoining ground.

J. Excavation: The removal of soil, rock, or hard material to obtain a specified depth or elevation.

K. Fill: Specified material placed at a specified degree of compaction to obtain an indicated grade or elevation.

L. Granular Subbase: A dense, well-graded aggregate mixture of sand-gravel or crushed stone with suitable binder soil, placed on a sub-grade to provide a suitable foundation for further construction.

M. Hard Material: Weathered rock, dense consolidated deposits or conglomerate materials which are not included in the definition of "rock" but which usually require the use of heavy excavation equipment with ripper teeth or the use of jack hammers for removal.

N. Lift: A layer (or course) of soil placed on top of a previously prepared or placed soil in a fill or embankment.

O. Rock: Solid, homogenous, interlocking crystalline material with firmly cemented, laminated, or foliated masses or conglomerate deposits, neither of which can be removed without systematic drilling and blasting, drilling and the use of expansion jacks or feather wedges, or the use of backhoe-mounted pneumatic hole punchers or rock breakers; also, large boulders, buried masonry, or concrete other than pavement, exceeding 1/2 cubic yard in volume. Removal of "hard material" will not be considered rock excavation because of intermittent drilling and blasting that is performed merely to increase production.

P. Soil: The loose surface material of the earth's crust resulting from the chemical and mechanical weathering of rock and organic material.

Q. Structure: A building constructed on-site for permanent use.

R. Sub-grade: The bottom layer of material (sometimes in-situ soil or rock) graded or otherwise prepared for supporting the addition of fill material, pavement courses, or a building slab.

S. Topsoil: In natural or undisturbed soil formations, the fine-grained, weathered material on the surface or directly below any loose or partially decomposed organic matter. Topsoil may be a dark-colored, fine, silty, or sandy material with a high content of well decomposed organic matter, often containing traces of the parent rock material. Gradation and material requirements specified herein apply to all topsoil references in this contract. The material shall be representative of productive soils in the vicinity.

T. Unsatisfactory Material: Existing, in-place soil or other material which can be identified as having insufficient strength characteristics or stability to carry intended loads in fill or embankment without excessive consolidation or loss of stability. Materials classified as PT, OH, or OL by ASTM D 2487 are unsatisfactory. Unsatisfactory materials also include manmade fills, refuse, frozen material, uncompacted backfills for previous construction, unsound rock or soil lenses, or other deleterious or objectionable material.

1.5 SUBMITTALS:

A. Certified Laboratory Test Reports: Potential fill material testing data shall be submitted for review and approval by the Architect. The minimum requirements of the Standard Specifications for Public Works Construction shall be met.

1.6 DELIVERY AND STORAGE:

A. Refer to Section 013300 - Submittal Requirements for submittal procedures.

B. Deliver and store materials in a manner to prevent contamination or segregation. Import material is to meet the specifications for structural fill as described in the Standard Specifications for Public Works Construction.

1.7 PROTECTION:

A. Utilities: Contact the Underground Service Alert 1 (800) 227-2600 and the utility companies at least two working days prior to construction for the location of all existing underground utilities. Movement of construction machinery and equipment over pipes and utilities during construction shall be at the Contractor's risk. For work immediately adjacent to or for excavations exposing a utility or other buried obstruction, use hand or light equipment excavation. Start hand or light equipment excavation on each side of the indicated obstruction and continue until the obstruction is uncovered or until clearance for the new grade is assured. Support uncovered lines or other existing work as affected by the contract excavation until approval for backfill is granted by the Architect. Report damage to utility lines or subsurface construction immediately to the utility company and the Architect.

B. Protection and Restoration of Surfaces: Protect newly graded areas from traffic, erosion, and settlements. Repair and reestablish damaged or eroded slopes, elevations or grades and restore surface construction prior to acceptance. Protect ditches and storm drain inlets from water-borne soils by means of straw bale dikes.
   1. Dispose of excavated material in such a manner that it will not obstruct the flow of streams, endanger a partly finished structure, impair the efficiency or appearance of facilities, or be detrimental to the completed work.

C. Dust Control: The contractor shall be responsible for the control of dust originating from any and all of the Contractor's construction operations either within or outside of the Work Area at all times in accordance with Federal, State, and Local laws, at the Contractor's expense. In areas where fugitive dust is a nuisance, the Contractor shall, as often as necessary, wet down the areas to prevent dusty conditions, this includes weekends and holidays

PART 2 PRODUCTS

2.1 MATERIALS:

A. Common Fill (not in structural areas): Common fill materials should be clean granular non-expansive soil free of organic impurities, trash rubbish, frozen or other objectionable material and comply with the following characteristics as a minimum:

TABLE A	
Sieve Size	Percent by Weight Passing
4"	100
¾"	70-100
#200	0-35
LL = 40 maximum	

PI = 15 maximum

B. Structural Fill: Structural fill materials should be free of organic materials, trash, rubbish, and frozen soil; be non-expansive granular soil, and have at least the following minimum characteristics:

TABLE B	
Sieve Size	Percent by Weight Passing
4"	100
¾"	70-100
#4	30-90
#200	6-20
LL = 30 maximum	
PI = 15 maximum	

PART 3 EXECUTION

3.1 SURFACE PREPARATION:

A. Site Clearing: Perform as specified in Section 311000 - Site Clearing.

B. Unsatisfactory Material: Remove organic matter, sod, muck and unsuitable clays under embankments when directed by the Architect. If soft spots are encountered, the area shall be overexcavated and reconstructed as directed by the Architect.

C. Excavation:
1. Unclassified Excavation: All site excavation not specifically covered under other sections will be "Unclassified Excavation." Excavate to the contours and dimensions indicated. Keep excavations free from water while construction is in progress. Notify the Architect immediately in writing in the event that it becomes necessary to remove unanticipated rock, unanticipated hard material, or other material defined as unsatisfactory to a depth greater than indicated and an adjustment in contract price will be considered. Refill excavations cut below the depths indicated with fill and compact as specified herein. Excavate soil disturbed or weakened by the construction operations and soils permitted to soften from exposure to weather.

3.2 FILLING AND BACKFILLING:

A. Filling and Backfilling Adjacent to Structures: Place backfill adjacent to structures and compact to prevent wedging action or eccentric loading upon or against the structures. To prevent the sliding of fill, step or serrate slopes. Do not use equipment for backfilling operations or for the formation of embankments against structures that will overload the structure. Construct backfill for storm drains, manholes, utility lines, and other utility appurtenances using the material and compaction requirements specified herein for the adjacent or overlying work. Bedding and initial backfill requirements are defined in Section 313000, "Excavation, Backfilling and Compacting for

Utilities." Backfilling against concrete will be done only after approval has been obtained from the Architect.

B. General: Construct fill and embankment at the locations and to lines and grades indicated. Step, bench, or break up sloped surfaces steeper than one vertical to 4 horizontal so that the fill material will bond with or be securely keyed to the existing material. Place satisfactory material in horizontal lifts not exceeding 8 inches in loose depth and then compacted. Material will not be placed on surfaces that are muddy, frozen, or contain frost. Compact with equipment well suited to the soil being compacted. Moisten or aerate material as necessary to provide the moisture content that will readily facilitate obtaining the specified compaction with the equipment used. Compact each lift as specified herein before placing the overlaying lift.

C. Common Fill: Common fill shall be placed in non-structural areas on compacted fill or compacted sub-grade in lifts not exceeding 8 inches in loose thickness, moisture conditioned, and compacted to 90% minimum relative compaction per ASTM D1557.

3.3 COMPACTION:

A. Compact each layer or lift of material specified so that the in-place density is not less than the percentage of maximum density as specified in Table 3.3.

TABLE 3.3	
Percent ASTM D1557	
Maximum Density	
Fill, Embankment and Backfill	% Required Compaction
Structural Fill (structure area)	95
Common Fill (non-structure area)	90
Grassed and landscape areas	90% up to 12" of finish grade
	85% in the top 12"

3.4 FINISHING OPERATIONS:

A. Site Grading: Grade to finished grades indicated within 0.10 foot. Grade areas to drain water away from structures. Existing grades that are to remain but are disturbed by the Contractor's operations shall be restored to existing condition.

B. Finishing Sub-grades under Structures and Pavements: Finish the surface of the top lift of the fill or top of the subgrade to the elevation and cross section indicated. The finished surface shall be smooth and of uniform texture.

C. Disposition of Surplus Material: Surplus or other soil material not required or suitable for filling, backfilling, or embankment shall be removed from the Owner's property and become the property of the Contractor.

D. Protection of Surfaces: Protect newly graded areas from traffic, erosion, and settlements that may occur. Repair or reestablish damaged grades, elevations, or slopes prior to acceptance of work.

3.5 FIELD SAMPLING AND TESTING:

A. Testing to be done by others. The frequency shall be as required pursuant to the project requirements.

END OF SECTION

SECTION 313000 - EXCAVATION, BACKFILLING AND COMPACTING

PART 1 GENERAL

1.1 APPLICABLE PUBLICATIONS:

A. The publications listed below form a part of this specification to the extent referenced. The publications are referred to in the text by the basic designation only.
   1. American Society for Testing and Materials (ASTM) Publications:
      a. C14-20 Standard Specification for Nonreinforced Concrete Sewer, Storm Drain, and Culvert Pipe
      b. C33-22 Standard Specification for Concrete Aggregates
      c. C76-84 Standard Specification for Reinforced Concrete Culvert, Storm Drain, and Sewer Pipe
      d. D422-63(2007)e1 Standard Test Method for Particle-Size Analysis of Soils
      e. D1140-17 Standard Test Methods for Determining the Amount of Material Finer than 75-µm (No. 200) Sieve in Soils by Washing
      f. D1556-16 Standard Test Method for Density and Unit Weight of Soil in Place by Sand-Cone Method
      g. D1557-12(R21) Standard Test Methods for Laboratory Compaction Characteristics of Soil Using Modified Effort (56,000 ft-lbf/ft3 (2,700 kN-m/m3))
      h. D2487-17(R20) Standard Practice for Classification of Soils for Engineering Purposes (Unified Soil Classification System)
      i. D4318-17e1 Standard Test Methods for Liquid Limit, Plastic Limit, and Plasticity Index of Soils
      j. D6938-17ae1 Standard Test Methods for In-Place Density and Water Content of Soil and Soil-Aggregate by Nuclear Methods (Shallow Depth)
   2. American Water Works Association (AWWA) Publications:
      a. M23-20 PVC Pipe - Design and Installation
   3. Standard Specifications for Public Works Construction (“Orange Book”); the latest edition.

1.2 DESCRIPTION:

A. This section includes requirements for excavation, preparation of pipe-laying surface, pipe bedding, backfilling and compaction.
   1. Referenced Standard Specifications: Materials and workmanship shall comply with the Standard Specifications for Public Works Construction and shall be in accordance with the referenced articles, sections, and paragraphs of the standard except that contractual and payment provisions do not apply. Where the term "Architect" is used, it shall mean the Engineer.
   2. All work shall be performed in compliance with the applicable sections of the Standard Specifications except as modified herein.

B. This section includes requirements for excavation, preparation of pipe laying surfaces, pipe bedding, backfilling, and compaction thereof to within five feet of the building structure.

1.3 DEFINITIONS:

A. Backfill: Material used in refilling a trench or other excavation.

B. Compaction: Any method of mechanically stabilizing a material by increasing its density at a controlled moisture condition. "Degree of Compaction" is expressed as a percentage of the maximum density obtained by the test procedure described in ASTM D1557 for general soil types or ASTM D4254 for isolated cohesionless materials, abbreviated in this specification as "95 percent ASTM D1557 maximum density."

C. Granular Pipe Bedding: A dense, well-graded aggregate mixture of sand, gravel, or crushed stone (mixed individually, in combination with each other, or with suitable binder soil) placed on a subgrade to provide a suitable foundation for pipe.

D. Hard Material: Weathered rock, dense consolidated deposits, or conglomerate materials, which are not included in the definition of "rock" but which usually require the use of heavy excavation equipment, ripper teeth, or jack hammers for removal.

E. Lift: A layer or course of soil placed on top of unprepared subgrade or a previously prepared or placed soil in a fill or backfill.

F. Unsatisfactory Material: Soil or other material identified as having insufficient strength or stability to carry intended loads on trench backfills without excessive consolidation or loss of stability. Also backfill material, which contains refuse, frozen material, large rocks, debris, and other material, which could damage the pipe or cause the backfill not to compact, shall be deemed ‘unsatisfactory material’. Additionally, materials classified as PT, OH, or OL by ASTM D2487 are unsatisfactory.

G. Unstable Material: Material in the trench bottom, which lacks firmness to maintain alignment and prevent joints from separating in the pipe, conduit, or appurtenance structure during backfilling. This may be material otherwise identified as satisfactory which has been disturbed or saturated.

1.4 SUBMITTALS:

A. Refer to Section 013300 - Submittal Requirements for submittal procedures.

B. Certified Laboratory Test Reports: Test reports shall be submitted to the Architect two weeks prior to construction. The minimum requirements of the Standard Specifications for Public Works Construction shall be met.
   1. Concrete
   2. Trench Backfill Material
   3. Pipe Bedding Material

C. Manufacturers Certificates of Compliance:
   1. Warning and identification tape.
   2. Submit any field test data not listed above sufficiently in advance of construction so as not to delay work.

1.5 DELIVERY AND STORAGE:

A. Deliver and store materials in a manner to prevent contamination, segregation, freezing, and other damage.

1.6 PROTECTION:

A. Shoring and Sheeting: Provide shoring, bracing, trench boxes and sheeting as required.

1. Prevent undermining of pavements and slabs.
2. Prevent slippage or movement in banks or slopes adjacent to the excavation.

B. Utilities: Movement of construction machinery and equipment over pipes and utilities during construction shall be at the Contractor's risk. Excavation made with power-driven equipment is not permitted within two feet of any known government-owned utility or subsurface construction. For work immediately adjacent to or for excavations exposing a utility or other buried obstruction, use hand or light equipment excavation. Start hand or light equipment excavation on each side of the indicated obstruction and continue until the obstruction is uncovered or until clearance for the new grade is assured. Support uncovered lines or other existing work affected by the contract excavation until approval for backfill is granted by the Architect. Report damage to utility lines or subsurface construction immediately to the Architect.

C. Structures and Surfaces: Protect newly backfilled areas and adjacent structures, slopes, or grades from traffic, erosion settlement, or any other damage. Repair and re-establish damaged or eroded grades and slopes and restore surface construction prior to acceptance. Protect existing streams, ditches, and storm drain inlets from water-borne soil by means of straw bale dike, filter fabric dams or other BMP approved by NDEP.
   1. Dispose of excavated material so that it will not; obstruct the flow of streams, endanger a partly finished structure, impair the efficiency or appearance of any facilities, or be detrimental to the completed work.

PART 2 PRODUCTS

2.1 SOIL MATERIALS:

A. Provide soil materials as described below free of debris, roots, wood, scrap material, vegetable matter, refuse, soft unsound particles, ice, or other deleterious and objectionable materials.
   1. Backfill: Bring trenches outside paved areas to grade indicated on the drawings. Use granular material, except around and up to 12 inches over pipe, where Class A bedding shall be used per Section 200.03.02 of the Standard Specifications. The material used above the Class A backfill will be Class E backfill as per Section 200.03.06 of the Standard Specifications. No testing other than for compaction and visual approval by the Engineer will be required, except if a change in material source is proposed.
   2. Special Backfill for Roads and Paved Areas: Backfill trenches under roads and paved areas as described in Section 312000, "Earth Moving." Use Class "E" backfill. Soils must comply with grading requirements and may be verified by testing. Adjustment of natural moisture content (drying or wetting) may be necessary, or imported fill may be required.
   3. Pipe Bedding Sand: Clean, sandy material, classified as SW or SP by ASTM D2487, and meeting the requirements for Class A Backfill, in Section 200.03.02 of the Standard Specifications.
   4. Gravel: Clean, coarsely graded natural gravel, crushed stone or a combination thereof identified as having a classification of GP in accordance with ASTM D2487 for bedding and backfill. Maximum particle size shall not exceed 2 inches.

2.2 BURIED WARNING AND IDENTIFICATION TAPE:

A. Polyethylene plastic warning tape manufactured specifically for warning and identification of buried utility lines. Provide tape on rolls, 3-inch minimum width, color coded as stated below for the intended utility with warning and identification imprinted in bold black letters continuously

over the entire tape length. Warning and identification to read, "CAUTION, BURIED (intended service) LINE BELOW," or similar wording. Color and printing is to be permanent, unaffected by moisture or soil.

Warning Tape Color Codes

Red	Electric
Yellow	Gas, Oil, Dangerous Materials
Orange	Telephone and Other Communications
Blue	Water Systems
Green	Sewer Systems
White	Steam Systems

B. Warning Tape for Metallic Piping: Acid and alkali-resistant polyethylene plastic tape conforming to the width, color, and printing requirements indicated above. Minimum thickness of the tape shall be 0.003 inch. Tape shall have a minimum strength of 1500 psi lengthwise and 1250 psi crosswise with a maximum 350 percent elongation.

C. Detectable Warning Tape for Non-Metallic Piping: Polyethylene plastic tape conforming to the width, color, and printing requirements indicated above. Minimum thickness of the tape shall be 0.004 inch. Tape shall have a minimum strength of 1500 psi lengthwise and 1250 psi crosswise. The tape shall be manufactured with integral wires, foil backing, or other means of enabling detection by a metal detector when the tape is buried up to 3 feet deep. Encase the metallic element of the tape in a protective jacket or provide with other means of corrosion protection.

PART 3 EXECUTION

3.1 SURFACE PREPARATION:

A. Cutting Pavement, Curbs, and Gutters: Sawcut with neat, parallel, straight lines one foot wider than trench width on each side of trenches and one foot beyond each edge of pits.

3.2 GENERAL EXCAVATION:

A. Keep excavations free from water while construction is in progress. Notify the Architect immediately in writing if it becomes necessary to remove rock or hard, unstable, or otherwise unsatisfactory material to a depth greater than indicated. Make trench sides as nearly vertical as practicable except where sloping of sides is allowed. Sides of trenches shall not be sloped from the bottom of the trench up to the elevation of the top of the pipe or conduit. Excavate ledge rock, boulders, and other unyielding material to an over depth at least 6 inches below the bottom of the pipe conduit and appurtenances unless otherwise indicated or specified. Blasting will not be permitted. Overexcavate soft, weak, or wet excavations. Use gravel placed in 6-inch-maximum layers to refill over depths to the proper grade. At the option of the Contractor, the excavations may be cut to an over depth of not less than 4 inches and refilled to required grade as specified. Grade bottom of trenches accurately to provide uniform bearing and support for each section of pipe conduit structure on undisturbed soil, or bedding material as indicated or specified at every point along its entire length except for portions where it is necessary to excavate for bell holes and for making proper joints. Dig bell holes and depressions for joints after trench has been graded. Dimension of bell holes shall be only 1/2-inch greater than length, width,

and depth of bell as required for properly making the particular type of joint to ensure that the bell does not bear on the bottom of the excavation. Trench dimensions shall be indicated.

1. Shoring and Sheeting: Shore and sheet excavations as appropriate to prevent injury to persons and damage to structures. Obtain approval from the Architect prior to removing any shoring, sheeting, or bracing in excavations adjacent to on-grade slabs, foundations, or other structural elements.

3.3 GENERAL BEDDING:

A. Shall be of the materials and depths as indicated for utility lines and utility line structures. Place bedding in 6-inch-maximum loose lifts. Provide uniform and continuous support for each section of structure except at bell holes or depressions necessary for making proper joints.

3.4 BURIED WARNING AND IDENTIFICATION TAPE:

A. Install tape in accordance with manufacturer's recommendations except as modified herein. Place tape 12 inches above the pipe between the bedding zone and the trench backfill.

3.5 GENERAL BACKFILLING:

A. Construct backfill in two operations (initial and final) as indicated and specified in this section. Place initial backfill using pipe bedding sand in 6-inch-maximum loose lifts to one foot above pipe and conduit unless otherwise specified. Ensure that initially placed material is thoroughly compacted under pipe haunches by the use of 'J'-bars or other tools as recommended by the pipe manufacturer. Bring up evenly on each side and along the full length of the structure. Ensure that no damage is done to structures or their protective coatings. Place the remainder of the backfill in 8-inch-maximum loose lifts unless otherwise specified. Compact each loose lift as specified in paragraph "General Compaction" before placing the next lift. Do not backfill in freezing weather or where the material in the trench is already frozen or is muddy, except as authorized. Provide a minimum cover from final grade of 3.5 feet for water mains, 2.5 feet for gas mains, 1 foot for storm drains, and 4 feet for sewer mains unless shown otherwise. Where settlements greater than the tolerance allowed herein for grading occur in trenches and pits due to improper compaction, excavate to the depth necessary to rectify the problem, then backfill and compact the excavation as specified herein and restore the surface to the required elevation. Coordinate backfilling with testing of utilities. Testing for the following shall be complete before final backfilling: water mains and services, storm drainage, sanitary sewer system, and gas distribution line. Provide buried warning and identification tape installed in accordance with the manufacturer's recommendation.

3.6 GENERAL COMPACTION:

A. Use hand-operated, plate-type, vibratory, or other suitable hand tampers in areas not accessible to larger rollers or compactors. Avoid damaging pipes and protective pipe coatings. Compact material in accordance with the following unless otherwise specified. If necessary, alter, change, or modify selected equipment or compaction methods to meet specified compaction requirements.

1. Compaction of Pipe and Conduit Bedding: Compact to 90 percent of ASTM D1557 maximum density.
2. Compaction of Backfill: Compact initial backfill material surrounding pipes, cables or conduits to 90 percent of ASTM D1557 maximum density except where bedding and backfill are the same material. Where bedding and backfill are the same material, compact initial

backfill to the density of the bedding. Under areas to be seeded or sodded, compact the top 12" of backfill to 85 percent of ASTM D1557 maximum density. For utilities under roads, streets, building slabs or other areas to be paved compact succeeding layers to 90 percent of maximum dry density.

3.7 FINISH OPERATIONS:

A. Grading: Finish to grades indicated within one-tenth of a foot. Graded areas to drain water away from structures. Grade existing grades that are to remain but have been disturbed by the Contractor's operations.

B. Disposition of Surplus Material: Surplus or other soil material not required or suitable for filling, backfilling, or grading shall be removed from the Owner's property by contractor and disposed off-site.

C. Protection of Surfaces: Protect newly graded areas from traffic, erosion, and settlements that may occur. Repair or reestablish damaged grades, elevations, or slopes.

D. Pavement Repair: Repair pavement, curbs, and gutters as indicated. Do not repair pavement until trench or pit has been backfilled and compacted as herein specified. Provide a temporary road surface of gravel over the backfilled portion until permanent pavement is repaired. Remove and dispose of temporary road surface material when permanent pavement is placed. As a minimum, maintain one-way traffic on roads and streets crossed by trenches; roads and streets shall be fully opened to traffic within one (1) day.

3.8 FIELD SAMPLING AND TESTING:

A. Testing to be done by others.

END OF SECTION

SECTION 314000 - GRADED CRUSHED AGGREGATE BASE COURSE

PART 1 GENERAL

1.1 APPLICABLE PUBLICATIONS:

A. The publications listed below form a part of this specification to the extent referenced. The publications are referred to in the text by the basic designation only.
   1. American Society for Testing and Materials (ASTM) Publications:
   2. Standard Specifications for Public Works Construction ("Orange Book"); the latest edition.

1.2 SUBMITTALS:

A. Refer to Section 013300 - Submittal Requirements for submittal procedures.

B. Test Reports: Before delivery of materials, submit the following test reports conducted on the source within at least 14 days of the proposed use:
   1. Gradation
   2. R-Value
   3. Atterberg Limits
   4. Percent of Wear
   5. Fractured Face

1.3 DELIVERY AND STORAGE:

A. Inspect materials delivered to site for consistency and stockpile as to prevent segregation and contamination.

1.4 WEATHER LIMITATIONS:

A. Do not construct base course when atmospheric temperature is below 35° F or when rainfall or other weather conditions may detrimentally affect the quality of the finished course.

PART 2 PRODUCTS

2.1 MATERIALS:

A. Aggregates: Consist of durable and sound crushed gravel, crushed stone, or crushed slag, free of lumps or balls of clay or other objectionable matter. Crushed stone and gravel shall be free from flat, elongated, soft, or disintegrated pieces. Materials shall conform to the requirements for Type 2 Class B aggregate base as specified in Section 200.01 of the Standard Specifications. Aggregate shall conform to the following gradation:

TYPE 2 CLASS B AGGREGATE BASE

Sieves	Percentage by Weight Passing Square Mesh Laboratory Sieves
1-1/2 inch	--
1 inch	100
3/4 inch	90-100
No. 4	35-65

No. 16	15-40
No. 200	2-10

1. The material shall have a liquid limit of not more than 35 and a plasticity index of not more than 3 as determined by ASTM D423 and ASTM D424, respectively. Prepare samples in accordance with ASTM D2217. Procedure A.

TYPE 2 CLASS B RECYCLED AGGREGATE BASE

Sieves	Percentage by Weight Passing Square Mesh Laboratory Sieves
2 inch	100
3/4 inch	---
No. 4	---
No. 200	0-12

1. The recycled aggregate base materials shall conform to the requirements of Section 200.01.04 – "Recycled Aggregate Base" of the Standard Specifications.

2.2 CONSTRUCTION EQUIPMENT:

A. Equipment shall be dependable and adequate for the purpose intended. Maintain equipment in satisfactory and safe operating condition. Subject to approval, special equipment dictated by local conditions may be used. Calibrated equipment, such as scales, batching equipment, spreaders, and similar items, shall have been recalibrated by an approved calibration laboratory within 12 months of commencing work.

PART 3 EXECUTION

3.1 GENERAL REQUIREMENTS:

A. All work shall be performed in strict compliance with Section 308 of the Standard Specifications.

3.2 BASE COURSE:

A. Construct the graded aggregate base course on a prepared subgrade, as indicated. Provide line and grade stakes for control. The base course shall consist of aggregate processed, deposited, spread, and compacted on a prepared surface. The Contractor shall be responsible for protection of completed areas against detrimental effects. Recondition, reshape, and recompact areas damaged by freezing, rainfall, or other weather conditions.

3.3 MIXING OF MATERIALS:

A. Mix aggregates in a stationary or traveling plant. Proportion aggregates by weight or volume in quantities to meet specified requirements. Incorporate during the mixing operation, water in quantities sufficient to provide the necessary moisture content for the specified compaction.

Mixing operations shall produce satisfactory uniform blending and the method of discharging into trucks shall not produce segregation.

3.4 PLACING:

A. Do not dump mixed materials in piles, but place on prepared subgrade or subbase in layers of uniform thickness with a spreader. When a compacted course 6 inches in thickness is required, place material in a single layer. When a compacted course in excess of 6 inches is required, place material in layers of equal thickness. Do not exceed 6 inches or have less than 3 inches in thickness for any compacted layer. Place layers so that when compacted, they will be true to grades or levels required with the least possible surface disturbance. Where the base course is constructed in more than one layer, clean the previously constructed layers of loose and foreign matter. Maintain material water content during the placing period to obtain the compaction specified. Make adjustments in placing procedures or equipment to obtain true grades, to minimize segregation and degradation, to reduce or increase water content, and to insure a satisfactory base course.

3.5 COMPACTING AND FINISHING:

A. Immediately following the placing, spread the finished mixture uniformly in a layer and bring to optimum moisture content. The loose thickness and the surface of the layer shall be such that the specified density and the required thickness shall be obtained after compaction. Compact the layer with steel-faced, vibrating or pneumatic-tired rollers, or other suitable compacting equipment or combinations thereof. Continue compacting until the layer is compacted through the full depth to a field density of at least 95 percent of the maximum density at optimum moisture content tested in accordance with ASTM D1557. In areas not accessible to rollers or compactors, compact the mixture with mechanical hand tampers. If the mixture is excessively moistened by rain, aerate by blade graders, or other suitable equipment. Aerate until the moisture content allows for the compaction to the required density. Finish the surface of the layer by a combination of rolling and blading. Final surface shall be smooth and free from waves, irregularities, and from ruts or soft yielding spots.

3.6 FINISHING AT EDGES OF BASE COURSE:

A. Place earth or other approved materials along the edges of the base course in such quantity that it will compact to the thickness of the course being constructed. When the course is being constructed in two or more layers, place material to the thickness of each layer. In each operation, allow at least a one-foot width of the shoulder to be rolled and compacted simultaneously with the rolling and compacting of each layer.

3.7 MAINTENANCE:

A. After construction is completed, maintain the base course throughout, except where portion of the succeeding course is under construction thereon. Maintenance includes drainage, rolling, shaping, and watering, as necessary, to maintain the course in proper condition. Correct deficiencies in thickness, composition, construction, smoothness, and density, which develop during the maintenance, to conform to the requirements specified herein. Maintain sufficient moisture by light sprinkling with water at the surface to prevent a dusty condition.

3.8 FIELD SAMPLING AND TESTING:

A. Testing to be performed by the Contractor: Submit test results prepared by an approved laboratory certifying compliance of the material source with the specifications at least 14 days prior to proposed date of use. Testing must have been completed within the past six months of proposed date of use.

B. Testing to be performed by the Owner: Acquire approval of materials and material sources in advance of the use of such materials in the work. The contractor will replace base where samples are removed.
   1. Sampling:
      a. Aggregates at the Source: Prior to production and delivery of aggregates, take at least one initial sample in accordance with ASTM D 75. Collect each sample by taking three incremental samples at random from the source material to make a composite sample of not less than 50 pounds. Repeat above sampling when source of material is changed or when unacceptable deficiencies or variations from specified grading of materials are found in testing.
      b. During Construction: Take one random sample from each day's run. Take samples in accordance with ASTM D75.
      c. Sample Identification: Place each sample in a clean container, securely fastened to prevent loss of material. Tag each sample for identification and with the following information:
         1) Contract No.
         2) Sample No.
         3) Quality
         4) Date of Sample
         5) Sampler
         6) Source
         7) Intended Use for Testing
      d. Testing:
         1) Aggregates: Test each sample of base course material without delay. Make gradation tests from each sample in accordance with ASTM C136. Make sieve analysis on material passing the No. 200 sieve in accordance with ASTM C 117.
         2) Field Density Tests: Take one test for each 500 square yards or 10,000 square feet of each layer of base course.
         3) Laboratory Density Tests: Perform tests in accordance with ASTM D 1557-91.

C. Thickness Tests: Measure thickness of base course at intervals such that there will be a depth measurement for at least each 500 square yards of complete base course. Make depth measurements by test holes, at least 3 inches in diameter, through the base course. Where base course deficiency is more than 1/2 inch correct by; scarifying, adding material of proper gradation, reblade, then recompact. Where the measured thickness is more than 1/2 inch thicker than indicated, consider it as the indicated thickness plus 1/2 inch for determining the average. The average thickness is the average of the depth measurements and shall not under run the thickness indicated.

END OF SECTION

SECTION 320190 - LANDSCAPE MAINTENANCE

PART 1 GENERAL

1.1 SCOPE

A. Work in this section includes the growing and maintenance operations necessary to establish the newly planted shrubs, trees, and other plantings; to provide insect and disease control, and to maintain the irrigation system, and related construction elements.

1.2 RELATED WORK SPECIFIED ELSEWHERE:

A. Section 328400 - Planting Irrigation

B. Section 329113 - Landscape Soil Preparation

C. Section 329300 - Planting

1.3 SUBMITTALS

A. Refer to Section 013300 - Submittal Requirements for submittal procedures.

B. Soil Testing: Contractor shall collect one-quart samples in the container planting areas of the in-place topsoil 20 days after completion of planting and submit to Waypoint Analytical, Inc. of Anaheim, (714)282-8777, for maintenance period fertilizer recommendation. Test results shall be made available to the City's Representative. Sample shall be a representative composite taken from several planting areas. Cost of soil test shall be paid for by the Contractor.

C. Herbicide/Fungicide/Insecticide: Submit a written recommendation from a State of Nevada appropriately licensed individual along with complete product data from proposed manufacturer, for review by City Inspector and/or City's appropriately licensed individual.

1.4 SCHEDULE

A. Work in this section will not begin until the irrigation audit is complete.

B. Maintenance and Warranty Period: Shall be per City of Standard Specifications.

C. Maintenance period shall be for a minimum period of ninety (90) calendar days after pre-final inspection.

PART 2 PRODUCTS

2.1 MATERIALS

A. Fertilizer: Used during the course of the maintenance period shall be determined by soils test required under Part 1 of this Section. For bidding purposes only, assume the use of ammonium sulfate (21-0-0) at 5 lbs. per 1000 SF, minimum of two applications.

B. Water: During the course of construction and maintenance period water shall be paid for by the Contractor.

C. Herbicide/Fungicide/Insecticide: Shall be a commercially available chemical recommended for this project and these plantings by a State of Nevada appropriately licensed individual. The licensed individual shall review all planting, including but not limited to seed, sod, groundcovers,

shrubs, and trees, the types and extent of soil preparation, the irrigation systems, drainage patterns, and other project characteristics to verify type, compatibility, and recommend the appropriate chemical(s) for use. Contractor shall be responsible for all overspray, spreading, runoff, plant health, and other impacts from the use of the chemical(s).

PART 3 EXECUTION

3.1 TIME LIMITS

A. The maintenance period shall commence from the date of substantial completion of planting as defined in paragraph 3.6 below, and extend for a 90-day period thereafter, or until the acceptance of Final Completion.

3.2 FERTILIZER APPLICATION:

A. Fertilizer(s) shall be applied per Waypoint Analytical, Inc. recommendations. For bidding purposes, assume initial application to be four weeks after planting and subsequent applications to be at 45-day intervals.

3.3 HERBICIDE APPLICATION:

A. Herbicide shall not be used until all plant material has been planted a minimum of 20-days. All planting areas shall be kept weed-free by non-herbicide methods during this time period. Herbicide shall not be applied to any areas that are or have been seeded. Contractor must apply the material in conformance with the written recommendations of the State appropriately licensed individual.

3.4 BASIC REQUIREMENTS:

A. All planting areas shall be kept weed-free at all times during the maintenance period. All pest and disease control shall be the Contractor's responsibility. All planting areas shall be kept at optimum moisture for plant growth. Settlement of soil and plants and soil erosion shall be repaired and areas replanted as required. Dying or deficient plants shall be replaced as soon as they become apparent.

3.5 CITY'S RESPONSIBILITY:

A. Work installed under this contract that is damaged or stolen prior to Substantial Completion shall be repaired or replaced by the Contractor without cost to the City. After Substantial Completion and through the maintenance period, these damages and similar factors such as extensive litter, abuse and defacement shall be the City's responsibility to repair or replace and shall not be a part of this contract. No planting shall be guaranteed beyond the maintenance period, except as to conformance to specified species and variety, and except as to conditions specified under "Root Systems" of Planting, Section 329300.

3.6 SUBSTANTIAL COMPLETION:

A. Shall be deemed as the time all major plantings, including groundcover, are installed, and when all other work is satisfactorily completed (with the exception of minor items to be completed as noted upon a checklist compiled by the City's Representative). Maintenance period shall not commence until work is deemed substantially complete by the City's Representative.

3.7 FINAL REVIEW:

A. Contractor shall request a final review of the project at least five days in advance of the proposed date. Failure to request this notice shall automatically extend the date of completion. The maintenance period will continue until project is deemed complete.

3.8 MEASUREMENT AND PAYMENT

A. All work under this section shall be included in the lump sum price bid for landscape maintenance and shall include full compensation for furnishing all labor, materials, tools, equipment, and incidentals, and for doing all the work involved in landscape maintenance, and related incidental work.

END OF SECTION

SECTION 321216 - ASPHALT PAVING

PART 1 GENERAL

1.1 APPLICABLE PUBLICATIONS:

A. The publications listed below form a part of this specification to the extent referenced. The publications are referred to in the text by the basic designation only.
   1. American Society for Testing and Materials (ASTM) Publications:
   2. American National Standards Institute (ANSI) Publications:
   3. The Asphalt Institute Manual Series:
   4. State of Nevada, Department of Transportation:

1.2 CURRENT EDITION OF THE STATE (OF NEVADA) MATERIALS MANUAL.

A. Standard Specifications for Public Works Construction ("Orange Book"); the latest edition.

1.3 STANDARD SPECIFICATIONS:

A. Whenever this specification is referenced, the following is understood:
   1. Interpretation of Standard Specifications:
      a. Whenever the term Architect occurs, it shall mean the Engineer.
      b. All references to statistical testing are deleted.
      c. All references to measurement and payment are deleted.

1.4 GENERAL REQUIREMENTS:

A. All work shall be performed in strict compliance with Section 320 of the Standard Specifications and the Pavement Design sections of the Geotechnical Report, except as modified herein.

B. The pavement shall consist of hot mineral aggregate uniformly mixed with hot bituminous material. Place the pavement in one or more layers, as indicated. Provide line and grade stakes as necessary for control. Place grade stakes in lanes parallel to the centerline of the areas to be paved and suitably spaced for string lining.

1.5 SUBMITTALS:

A. Refer to Section 013300 - Submittal Requirements for submittal procedures.

B. Certificate of Compliance: Submit a certificate of compliance for each shipment of bituminous material used in the mix. Submit certificate of compliance for all striping materials.
   1. Submit test results prepared by an approved commercial laboratory verifying compliance with the Specifications for the source materials proposed for use. Submit test results at least 14 days in advance of proposed use.

C. Job Mix Formula: Submit a job mix formula, prepared within one year of submittal by an approved commercial laboratory, for approval prior to preparing and placing the bituminous mixture. Design mix using procedures contained in Chapter III, Marshall Method of Mix Design, of the Asphalt Institute MS-2. The formulas shall indicate the physical properties of the mixes as shown by tests made by the approved commercial laboratory using materials identical to those to be used on this project. Submit all formulas with materials samples. The job mix formula for each mixture shall be in effect until modified in writing by the Contractor and approved by the Owner. Provide a new job mix formula for each source change.

1. Required Data: The job-mix formula shall show the following: the source and proportions (percent by weight) of each ingredient of the mixture; the correct gradation (the percentages passing each size sieve listed in the specifications for the mixture to be used) for the aggregate and mineral filler from each separate source and from each different size to be used in the mixture and for the composite mixture; the amount of material passing the No. 200 sieve; the number of blows of hammer compaction per side of molded specimen; the temperature viscosity relationship of the asphalt cement; the stability, flow, percent voids in mineral aggregate, percent air voids, unit weight; asphalt absorption by the aggregate; effective asphalt content as percent by weight of total mix; the temperature of the mixture immediately upon completion of mixing; the asphalt viscosity grade and/or penetration range; and

The Results of:	As Determined by:
Specific Gravity of Asphalt	ASTM D70
Coarse Aggregate:	
Absorptive and Bulk Specific Gravity	ASTM C127
Abrasion Loss	ASTM C131
Soundness Loss	ASTM C88
Stripping Tests	ASTM D1664
% Crushed Pieces in Gravel	Counting by Observation and Weight
Fine Aggregates:	
Absorptive and Bulk Specific Gravity	ASTM C128
Soundness Loss	ASTM C 88
Bituminous Mixture:	
Bulk Specific Gravity	ASTM D1188 or D2726
Theoretical Maximum Specific Gravity	ASTM D2041
Index of Retained Strength	ASTM D1075

2. Charts: Plot and submit the specified aggregate gradation band, the job mix gradation, and the job mix tolerance band on a grain size chart.
3. Specimens: ASTM D1559 for the making and testing of all bituminous specimens with the following exceptions:
   a. Compaction: Apply 50 blows for mix number.
   b. Curves: Plot and submit curves for the wearing course to show the effect on the test properties of at least four different percentages of asphalt on the unit weight, stability, flow, air voids, and voids in mineral aggregate; each point on the curves shall represent the average of at least four specimens.
   c. Cooling of Specimen: After compaction is completed, allow the specimen to cool in air to the same temperature approximately as that of the water (77 °F) to be used in the specific gravity determination.
4. Selection of Optimum Asphalt Content: Base selection on percent of total mix and the average of the values at the following points on the curves for each mix:

Stability	Peak
Unit Weight	Peak

Percent Air Voids	Median

5. Composition of Mixtures: The bituminous plantmix shall be composed of a mixture of aggregates, filler (if required), and bituminous material. The several aggregate fractions shall be sized, uniformly graded, and combined in such proportions that the resulting mixture meets the grading requirements of the job-mix formula, and the requirements of Section 320 of the "Orange Book" Specifications, except for Marshall stability and flow.
   a. The Contractor shall submit in writing for approval a job-mix formula with single values for and within the following tolerance ranges:
      1) The percentage of aggregate passing each specified sieve.
      2) The percentage of bitumen to be added (to 0.1 percent).
      3) Marshall Stability, Pounds (1800 minimum).
      4) Voids, Total Mix, Percent (3-5%).
      5) Flow, Marshall (8-20).
6. Variations from Formula: Variations from the approved job-mix formula shall not exceed the following; however, in no case shall the job-mix formula, with tolerances applied, fall outside the general limits for aggregate gradation and bituminous material specified herein:

Aggregate Passing	Tolerance (Plus or Minus)
No. 4 and larger sieves	7 percent
No. 8 to 100 sieves	4 percent
No. 200	2 percent
Asphalt Cement	0.5 percent of total wt. of mix
Temperature of Mixture as discharged	20 °F

1.6 DELIVERY AND STORAGE:

A. Inspect materials delivered to the site for damage and store with a minimum of handling. Store aggregates in such a manner as to prevent segregation, contamination, or intermixing of the different aggregate sizes.

1.7 TRAFFIC CONTROL:

A. Vehicular traffic, including heavy equipment, shall not be permitted on the pavement until the surface temperature has cooled to at least 120 °F. Surface temperature shall be measured by approved surface thermometers or other satisfactory methods.

1.8 OPERATIONAL SAFETY AND HEALTH GUIDELINES:

A. In addition to the requirements of the General Provisions, conduct mixing and delivery of bituminous materials and paving operations in accordance with ANSI A10.17.

1.9 WEATHER LIMITATIONS:

A. Place the bituminous mixture only on dry surfaces. Do not place bituminous material when the air temperature is below 40 °F when wind-chill factor is below 40 °F or when weather conditions otherwise prevent the proper handling or finishing of the bituminous mixtures.

PART 2 PRODUCTS

2.1 MATERIALS:

A. Aggregates: Grade and proportion aggregates and filler so that the combined mineral aggregate conforms to the criteria specified herein.

1. Aggregate for asphaltic concrete shall conform to Section 200 of the Standard Specifications, Type 3 for individual test result conforming to 3/8-inch maximum size gradation.

B. Asphaltic Materials:
   1. Asphalt Cement: PG64-28NV, Section 201, Table 201.2-IV of the Standard Specifications.

PART 3 EXECUTION

3.1 CONSTRUCTION PROCEDURES:

A. Mixing: Produce bituminous mixture in a plant as specified in Section 320 of the Standard Specifications.

B. Transportation of Bituminous Mixtures: Transport bituminous material from the mixing plant to the paving site in trucks having tight, clean, smooth beds that have been coated with a minimum amount of concentrated solution of hydrated lime and water or other approved coating to prevent adhesion of the mixture to the truck bodies. Petroleum products will not be permitted for coating truck bodies. Make deliveries so that the spreading and rolling of all the mixture prepared for one day's run can be completed during daylight, unless adequate approved artificial lighting is provided by Architect. Deliver mixture to the area to be paved in such a manner that the temperature at the time of dumping into the spreader will be higher than that specified herein. Any loads that are below minimum temperature, that have crusts of cold unworkable material, or that have been wet excessively by rain shall be rejected. Hauling over freshly laid material is not permitted.

C. Placing:
   1. Surface Preparation of Underlying Course: Prior to the laying of the asphalt concrete, contractor shall clean underlying course of all foreign or objectionable matter with power blowers or power brooms, supplemented by hand brooms and other cleaning methods where necessary.
   2. Spraying of Contact Surfaces: Contractor shall spray contact surfaces of previously constructed pavement with a thin coat of bituminous material conforming to Section 316 of the Standard Specifications. Paint contact surfaces of structures with a thin coat of emulsion or other approved bituminous material prior to placing the bituminous mixture.
   3. General Requirements for Use of Bituminous Spreaders: The range of temperatures of the mixtures at the time of spreading behind the paver shall be between 235 °F and 300 °F. Bituminous concrete having temperatures less than minimum spreading temperature prior to compaction, will be rejected. Contractor shall adjust spreader and regulate speed so that the surface of the course is smooth and continuous without tears and pulling, and of such depth that, when compacted, the surface conforms with the cross section, grade, and contour indicated. Unless otherwise directed, Contractor shall begin the placing along the centerline of areas to be paved on a crowned section or on the high side of area with a one-way slope, and in the direction of the major traffic flow. Place mixture in consecutive adjacent strips having a minimum width of 10 feet, except where the edge lanes require strips less than 10 feet to complete the area. Contractor shall construct longitudinal joints and edges to true line markings. Establish lines parallel to the centerline of the area to be paved, and place string lines coinciding with the established lines for the spreading machine to follow. The number and location of the lines shall be as directed. When specified grade and smoothness requirements can be met for initial lane construction by use of an approved

long ski-type device of not less than 30 feet in length and for subsequent lane construction by use of a short ski or shoe, in-place string lines for grade control may be omitted. Contractor shall place mixture as nearly continuous as possible, and adjust the speed of placing as directed, to permit proper rolling.

D. Compaction of Mixture: Affect compaction by rolling, Contractor shall begin rolling as soon as placement of the mixture will bear the rollers without undue displacement. Continue rolling until all roller marks are eliminated and the course has a density of at least 96% but not more than 100% of that attained in a laboratory specimen of the same mixture prepared in accordance with ASTM D1559. Operation of rollers shall be by competent and experienced operators. Contractor shall provide sufficient rollers for each spreading machine in operation on the job and to handle plant output. Skin patching of an area after compaction is not permitted. Contractor shall remove any mixture that becomes mixed with foreign material or is defective, replace with fresh mixture, and compact to the density of the surrounding area.

E. Joints: All joints shall present the same texture, density, and smoothness as other portions of the course. Carefully make joints between old and new pavement or within new pavements in a manner as to ensure a thorough and continuous bond between old and new sections of the course. Paint all vertical contact surfaces of previously constructed sections with a thin uniform coat of emulsion or other approved bituminous material just before the fresh mixture is placed.
   1. Transverse: The roller shall pass over the unprotected end of the freshly laid mixture only when the laying of the course is to be discontinued. Except when an approved bulkhead is used, cut back the edge of the previously laid course to expose an even, vertical surface for the full thickness of the course. When required, rake fresh mixture against the joints, thoroughly tamp with hot tampers, smooth with hot smoothers, and roll. In all cases, transverse joints in adjacent lanes shall be offset a minimum of two feet.
   2. Longitudinal Joints: Space joints so that they will not coincide with that of existing pavement or previously placed courses and will be at least one foot distant. When the edges of the longitudinal joints are irregular, honeycombed, or poorly compacted, cut back all unsatisfactory sections of joint to expose an even vertical surface for the full thickness of the course. When required, rake fresh mixture against the joint, thoroughly tamp with hot tampers, and roll while hot.

3.2 FIELD SAMPLING AND TESTING:

A. Sampling and testing to be performed by others, except for the submittals specified in 1.04 “Submittals,” referenced above.
   1. Sampling:
      a. Aggregates at Source: Prior to production and delivery of aggregates, take at least one initial sample in accordance with ASTM D75 at the source.
      b. Cold Feed Aggregate Sampling: Take two samples daily from the belt conveying materials from the cold feed. Collect materials in three increments at random to make a representative composite sample of not less than 50 pounds. Take samples in accordance with ASTM D75.
      c. Mineral Filler: ASTM C183. Take samples large enough to provide ample material for testing.
      d. Pavement and Mixture: Take samples for the determination of mix properties, thickness and density of the completed pavements. Take samples and test at not less than frequency specified hereinafter and at the beginning of plant operations; for each day's

work as a minimum; each change in the mix or equipment; and as often as directed. Accomplish sampling in accordance with ASTM D979.

e. Sample Identification: Furnish each sample in a clean container, securely fastened to prevent loss of material. Tag each sample for identification. The tag shall contain the following information:
   1) Contract No.
   2) Sample No.
   3) Quality
   4) Date of Sample
   5) Sampler
   6) Source
   7) Intended Use
   8) For Testing

2. Testing:
   a. Aggregates: ASTM C136 for gradation tests. ASTM D546 for mineral filler. ASTM D1664 for stripping tests.
   b. Bituminous Materials: Certificate of compliance is required for each shipment of bituminous material to be used in the mix.
   c. Bituminous Mix: ASTM D2172. Test one sample for each 500 tons, or fraction thereof, of the uncompacted mix for extraction and sieve analysis per ASTM C136 and C117. Test one sample for each 500 tons or fraction thereof for stability and flow per ASTM D1559.
   d. Pavement Courses:
      1) Density: For each 500 tons or each lift of less than 500 tons of bituminous course placed, determine the representative laboratory density by averaging the density of four laboratory specimens prepared in accordance with ASTM D1559; samples for these specimens shall be taken from the uncompacted mat behind the paver; the Contractor shall record in an approved manner the project areas represented by the laboratory densities. From each representative area so recorded, determine field density of the pavement by averaging the densities of 4-inch diameter cores obtained from the wearing course; take one core for each 500 square yards or fraction thereof of course placed. The density of the laboratory prepared specimens and the cored samples will be determined in accordance with ASTM D1188 or D2726, as applicable. Separate pavement layers by sawing or other approved means. The density shall be not less than the specified density. The Contractor shall correct areas of insufficient density by removing the pavement in question and replacing with new pavement. Refer to Section 320.01.01 and 320.02.01 'Mitigation of Unacceptable Plantmix Bituminous Pavement,' of the Standard Specifications for mitigation methods.
      2) Thickness: Determine thickness of the wearing course from samples taken for the field density test. The maximum allowable deficiency at any point shall not be more than 1/4 inch less than the indicated thickness for any course. The average thickness of the course or of the combined courses shall be not less than the indicated thickness. Where the deficiency is more than the specified tolerances, the Contractor shall correct each such representative area or areas by removing the pavement in question and replacing with new pavement.

3) Finished Grades: The finish grades of each course placed shall not vary from the finish elevations, profiles and cross sections indicated on the drawings by more than 1/2-inch. The Contractor shall correct deficient paved areas by removing existing work and replacing with new materials meeting the specifications without additional cost to the Owner. Skin patching for correcting low areas will not be permitted.

END OF SECTION

SECTION 321313 - CONCRETE ITEMS

PART 1 GENERAL

1.1 SUMMARY:

A. This section includes: Construction of all concrete pavement and valley gutter as shown on the plans and as required by the specifications.

1.2 RELATED DOCUMENTS:

A. The Contractor shall refer to Sections 202, 312 and 314 of the Standard Specifications for Public Works Construction, “Orange Book”, latest edition.

1.3 SUBMITTALS:

A. Refer to Section 013300 - Submittal Requirements for submittal procedures.

B. Job Mix Formula: Submit a job mix formula, prepared within one year of submittal by an approved commercial laboratory, for approval prior to preparing and placing any PCC mixture. The formulas shall indicate the physical properties of the mixes as shown by tests made by the approved commercial laboratory using materials identical to those to be used on this project. Provide a new job mix formula for each source change.
   1. Certificate of Compliance: Submit a certificate of compliance for each shipment of;
      a. Portland Cement material used in the mix.
      b. Penetrating siloxane/silane concrete sealer.
      c. Submit certificate of compliance for all admixtures and reinforcement materials.
      d. Submit test results for each concrete pavement mixture.

1.4 QUALITY ASSURANCE:

A. Manufacturer Qualifications: Manufacturer of ready-mixed concrete products who complies with ASTM C94 requirements for production facilities and equipment.

B. ACI Publications: Comply with ACI 301, "Specification for Structural Concrete," unless modified by requirements in the Contract Documents.

PART 2 PRODUCTS

2.1 MATERIALS:

A. Unless otherwise indicated on the drawings, concrete shall have a minimum 28-day compressive strength of 4,000 psi, and shall contain an air entraining agent sufficient to produce an entrained air content within the range of 5 to 7 percent. Maximum water/cement ratio shall be 0.45. Concrete shall comply with the requirements of Section 202 of the Standard Specifications unless otherwise specified herein.

2.2 STEEL REINFORCEMENT:

A. Steel reinforcement shall comply with ACI requirements.

B. Plain-Steel Welded Wire Reinforcement: ASTM A185, fabricated from steel wire into flat sheets.

C. Reinforcing Bars: ASTM A615, Grade 60; deformed.

D. Bar Supports: Bolsters, chairs, spacers, and other devices for spacing, supporting, and fastening reinforcing bars, welded wire reinforcement, and dowels in place. Manufacture bar supports according to CRSI's "Manual of Standard Practice."

2.3 CONCRETE MATERIALS:

A. Cementitious Material: Use the following cementitious materials, of the same type, brand, and source throughout the Project:
   1. Portland Cement: ASTM C150, Type 1-P or II, low alkali Portland cements.
   2. Blended Hydraulic Cement: ASTM C 595, Type I-P cement.

B. Aggregates: ASTM C 33, for normal weight aggregate. Course aggregate shall be either No. 57 or No. 67, as indicated in Section 200.05 of the Standard Specifications. Provide aggregates from a single source.
   1. Water: ASTM C94.
   2. Air-Entraining Admixture: ASTM C260.
   3. Chemical Admixtures: ASTM C494/C494M, of type suitable for application, certified by manufacturer to be compatible with other admixtures and to contain not more than 0.1 percent water-soluble chloride ions by mass of cementitious material.

2.4 FIBER REINFORCEMENT:

A. Synthetic Fiber: Polypropylene fibers engineered and designed for use in concrete pavement, complying with ASTM C1116, Type III.

2.5 SEALANT AND CURING MATERIALS:

A. Sealer: Penetrating siloxane/silane concrete sealer to be applied to all exposed surfaces.

B. Absorptive Cover: AASHTO M 182, Class 2, burlap cloth.

C. Moisture-Retaining Cover: ASTM C 171, polyethylene film or white burlap-polyethylene sheet.

D. Water: Potable.

E. White Waterborne Membrane-Forming Curing Compound: ASTM C309, Type 2, Class B.

2.6 RELATED MATERIALS:

A. Preformed Expansion Joint Filler: Shall comply with ASTM D944.

B. Pavement Marking Paint: Refer to Section 321220 - Pavement Markings.

PART 3 EXECUTION

3.1 EXAMINATION:

A. Proof-roll prepared subbase surface below concrete pavements with heavy pneumatic-tired equipment to identify soft pockets and areas of excess yielding.

B. Contractor to turn in load tickets for all concrete batches. All load tickets shall include batch weights.

3.2 EDGE FORMS AND SCREED CONSTRUCTION:

A. Set, brace, and secure edge forms, bulkheads, and intermediate screed guides for pavement to required lines, grades, and elevations. Install forms to allow continuous progress of work and so forms can remain in place at least 24 hours after concrete placement.

B. Clean forms after each use and coat with form-release agent to ensure separation from concrete without damage.

3.3 STEEL REINFORCEMENT:

A. General: Comply with CRSI's "Manual of Standard Practice" for fabricating, placing, and supporting reinforcement.

3.4 JOINTS:

A. General: All concrete sidewalks, curbs and gutters shall have 1/2" expansion joints every 30'-0" and weakened plane joints every 10' on center both directions except as noted otherwise on the plans. Expansion joints shall be filled with pre-formed joint filler material to a point 3/4" below the surface and the remaining void completely filled with joint sealant.

B. Form construction, isolation, and contraction joints and tool edgings true to line with faces perpendicular to surface plane of concrete. Construct transverse joints at right angles to centerline, unless otherwise indicated.

C. Construction Joints: Set construction joints at side and end terminations of pavement and at locations where pavement operations are stopped for more than one-half hour unless pavement terminates at isolation joints.

D. Isolation Joints: Form isolation joints of preformed joint-filler strips abutting concrete curbs, catch basins, manholes, inlets, structures, walks, other fixed objects, and where indicated.

E. Contraction Joints: Form weakened-plane contraction joints, sectioning concrete into areas as indicated. Construct contraction joints for a depth equal to at least one-fourth of the concrete thickness, to match jointing of existing adjacent concrete pavement.

F. Edging: Tool edges of pavement, gutters, curbs, and joints in concrete after initial floating with an edging tool to a 3/8-inch radius. Repeat tooling of edges after applying surface finishes. Eliminate tool marks on concrete surfaces.

3.5 CONCRETE PLACEMENT:

A. Moisten subbase to provide a uniform dampened condition at time concrete is placed.

B. Comply with ACI 301 requirements for measuring, mixing, transporting, and placing concrete.

C. Deposit and spread concrete in a continuous operation between transverse joints. Do not push or drag concrete into place or use vibrators to move concrete into place.

D. Screed pavement surfaces with a straightedge and strike off.

E. Commence initial floating using bull floats or darbies to impart an open textured and uniform surface plane before excess moisture or bleed water appears on the surface. Do not further disturb concrete surfaces before beginning finishing operations or spreading surface treatments.

3.6 FLOAT FINISHING:

A. General: Do not add water to concrete surfaces during finishing operations.

B. Float Finish: Begin the second floating operation when bleed-water sheen has disappeared and concrete surface has stiffened sufficiently to permit operations. Float surface with power-driven floats, or by hand floating if area is small or inaccessible to power units. Finish surfaces to true planes. Cut down high spots and fill low spots. Refloat surface immediately to uniform granular texture.
   1. Medium-to-Coarse-Textured Broom Finish: Provide a coarse finish by striating float-finished concrete surface 1/16 to 1/8 inch deep with a stiff-bristled broom, perpendicular to line of traffic.

3.7 CONCRETE PROTECTION AND CURING:

A. General: Protect freshly placed concrete from premature drying and excessive cold or hot temperatures.

B. Comply with ACI 306.1 for cold-weather protection.

C. Evaporation Retarder: Apply evaporation retarder to concrete surfaces if hot, dry, or windy conditions cause moisture loss approaching 0.2 lb/sq. ft. before and during finishing operations. Apply according to manufacturer's written instructions after placing, screeding, and bull floating or darbying concrete, but before float finishing.

D. Begin curing after finishing concrete but not before free water has disappeared from concrete surface.

E. Curing Methods: Cure concrete by moisture curing, moisture-retaining-cover curing compound or a combination of these methods.

F. Application of siloxane/silane concrete sealer to all concrete surfaces exposed to deicing salts or chemicals. Application methods and rate shall be in accordance with approved submittals and manufacturer recommendations.

3.8 PAVEMENT TOLERANCES:

A. Comply with tolerances of ACI 117 and as follows:
   1. Elevation: 1/4 inch.
   2. Thickness: Plus 3/8 inch, minus 1/4 inch.
   3. Surface: Gap below 10-foot- long, unleveled straightedge not to exceed 1/4 inch.
   4. Joint Spacing: 3 inches.
   5. Contraction Joint Depth: Plus 1/4 inch, no minus.
   6. Joint Width: Plus 1/8 inch, no minus.

3.9 WHEEL STOPS:

A. Securely attach wheel stops into pavement with not less than two galvanized steel dowels embedded in holes drilled or cast into wheel stops at one-quarter to one-third points. Firmly bond each dowel to wheel stop and to pavement. Securely install dowels into pavement and bond to wheel stop. Recess head of dowel beneath top of wheel stop.

3.10 SAMPLING AND TESTING:

A. To be performed by others. The following is an example of the type and frequency of testing which will occur:

B. Sampling: ASTM C172. Collect samples of fresh concrete to perform tests specified. ASTM C31 for making test specimens.

C. Testing:
   1. Slump Tests: ASTM C143. Take concrete samples during concrete placement. The maximum slump may be increased as specified with the addition of an approved admixture provided that the water-cement ratio is not exceeded. Perform tests at commencement of concrete placement, when test cylinders are made, and for each batch (minimum) or every 25 cubic yards (maximum) of concrete.
   2. Temperature Tests: Test the concrete delivered and the concrete in the forms. Perform tests in hot or cold weather conditions (below 50 degrees F and above 80 degrees F) for each batch (minimum) or every 10 cubic yards (maximum) of concrete, until the specified temperature is obtained, and whenever test cylinders and slump tests are made.
   3. Compressive Strength Tests: ASTM C39. Make three test cylinders for each set of tests in accordance with ASTM C31. Test one cylinder at 7 days, one cylinder at 28 days, and hold one cylinder in reserve. Provide concrete cylinders for compressive tests not less than once a day, nor less than once for each 30 cubic yards of concrete. Double the cylinder collection frequency and number of batches samples when pumping concrete. If the average strength of the 28-day test cylinders is less than f'c and a maximum of one single cylinder is less than f'c minus 300 psi, take three ASTM C42 core samples and test. If the average strength of the 28-day test cylinders is less than f'c and two or more cylinders are less than f'c minus 300 psi, take six core samples and test. Concrete represented by core tests shall be considered structurally adequate if the average of three cores is equal to at least 85 percent of f'c and if no single core is less than 75 percent of f'c. Locations represented by erratic core strengths shall be retested. Remove concrete not meeting strength criteria and provide new, acceptable concrete. Repair core holes with nonshrink grout. Match color and finish of adjacent concrete.
   4. Air Content: ASTM C173 or ASTM C231. Test air-entrained concrete for air content at the same frequency as specified for slump tests.

3.11 REPAIRS AND PROTECTION:

A. Remove and replace concrete pavement that is broken, damaged, or defective or that does not comply with requirements in this Section.

B. Protect concrete from damage. Exclude traffic from pavement for at least 14 days after placement.

C. Maintain concrete pavement free of stains, discoloration, dirt, and other foreign material. Sweep concrete pavement not more than two days before date scheduled for Substantial Completion inspections.

END OF SECTION

SECTION 321373 - CONCRETE PAVING JOINT SEALANTS

PART 1 - GENERAL

1.1 SUMMARY:

A. This item shall consist of providing and installing a resilient and adhesive joint sealing material capable of effectively sealing joints and cracks in rigid pavements.

1.2 RELATED DOCUMENTS:

A. Drawings and general provisions of the Contract, including General and Supplementary Conditions and Division 01 Specification Sections, apply to this Section.

PART 2 PRODUCTS

2.1 JOINT SEALANTS.

A. Joint sealant materials shall meet the requirements of ASTM D5893 Standard specifications for cold applied, single component, chemically curing silicone joint sealant for Portland cement concrete pavements and shall be 890-SL manufactured by Dow Corning Corporation, or equal.

B. Each lot or batch of sealant shall be delivered to the jobsite in the manufacturer's original sealed container. Each container shall be marked with the manufacturer's name, batch or lot number, the safe heating temperature, and shall be accompanied by the manufacturer's certification stating that the sealant meets the requirements of this specification.

2.2 BACKER ROD.

A. The material furnished shall be a compressible, non-shrinking, non-staining, non-absorbing material that is non-reactive with the joint sealant. The material shall have a water absorption of not more than 5% when tested in accordance with ASTM C509. The backer-rod material shall be 25% ± 5 % larger in diameter than the nominal width of the crack.

2.3 BACKUP MATERIALS.

A. Provide backup material that is a compressible, non-shrinking, non-staining, non-absorbing material, nonreactive with the joint sealant. The material shall have a melting point at least 5°F (3°C) greater than the pouring temperature of the sealant being used when tested in accordance with ASTM D789. The material shall have a water absorption of not more than 5% of the sample weight when tested in accordance with ASTM C509. The backup material shall be 25 ±5% larger in diameter than the nominal width of the crack.

PART 3 EXECUTION

3.1 INSTALLATION, GENERAL:

A. Time of application. Joints shall be sealed as soon after completion of the curing period as fesible and before the pavement is opened to traffic, including construction equipment. The pavement temperature shall be 50°F (10°C) and rising at the time of application of the poured joint sealing material. Do not apply sealant if moisture is observed in the joint.

B. Equipment. Machines, tools, and equipment used in the performance of the work required by this section shall be approved before the work is started and maintained in satisfactory condition at all times. Submit a list of proposed equipment to be used in performance of construction work including descriptive data, 14 days prior to use on the project.
   1. Concrete saw. Provide a self-propelled power saw, with water-cooled diamond or abrasive saw blades, for cutting joints to the depths and widths specified or for refacing joints or cleaning sawed joints where sandblasting does not provide a clean joint.
   2. Waterblasting equipment. Include with the waterblasting equipment a trailer-mounted water tank, pumps, high-pressure hose, wand with safety release cutoff control, nozzle, and auxiliary water resupply equipment. Provide water tank and auxiliary resupply equipment of sufficient capacity to permit continuous operations. The nozzle shall have an adjustable guide that will hold the nozzle aligned with the joint approximately one inch (25 mm) above the pavement surface. Adjust the height, angle of inclination and the size of the nozzle as necessary to obtain satisfactory results. A pressure gauge mounted at the pump shall show at all times the pressure in psi (kPa) at which the equipment is operating.
   3. Hand tools. Hand tools may be used, when approved, for removing defective sealant from a crack and repairing or cleaning the crack faces.
   4. Cold-applied, single-component sealing equipment. The equipment for installing ASTM D5893 single component joint sealants shall consist of an extrusion pump, air compressor, following plate, hoses, and nozzle for transferring the sealant from the storage container into the joint opening. The dimension of the nozzle shall be such that the tip of the nozzle will extend into the joint to allow sealing from the bottom of the joint to the top. Maintain the initially approved equipment in good working condition, serviced in accordance with the supplier's instructions, and unaltered in any way without obtaining prior approval. Small hand-held air-powered equipment (i.e., caulking guns) may be used for small applications.

3.2 PREPARATION OF JOINTS.

A. Sawing. All joints shall be sawed in accordance with specifications and plan details. Immediately after sawing the joint, the resulting slurry shall be completely removed from joint and adjacent area by flushing with a jet of water, and by use of other tools as necessary.

B. Sealing. Immediately before sealing, the joints shall be thoroughly cleaned of all remaining laitance, curing compound, filler, protrusions of hardened concrete, old sealant and other foreign material from the sides and upper edges of the joint space to be sealed. Cleaning shall be accomplished by concrete saw, and waterblaster as specified in paragraph 605-3.2. After final cleaning and immediately prior to sealing, blow out the joints with compressed air and leave them completely free of debris and water. The joint faces shall be surface dry when the seal is applied.

C. Back-up material. When the joint opening is of a greater depth than indicated for the sealant depth, plug or seal off the lower portion of the joint opening using a back-up material to prevent the entrance of the sealant below the specified depth. Take care to ensure that the backup material is placed at the specified depth and is not stretched or twisted during installation.

D. Installation of sealants. Joints shall be inspected for proper width, depth, alignment, and preparation, and shall be approved by the Engineer before sealing is allowed. Sealants shall be installed in accordance with the following requirements:

E. Immediately preceding, but not more than 50 feet (15 m) ahead of the joint sealing operations, perform a final cleaning with compressed air. Fill the joints from the bottom up to 3/8 inch below the pavement surface. Remove and discard excess or spilled sealant from the pavement by approved methods. Install the sealant in such a manner as to prevent the formation of voids and entrapped air. In no case shall gravity methods or pouring pots be used to install the sealant material. Traffic shall not be permitted over newly sealed pavement until authorized by the Contracting Officer. When a primer is recommended by the manufacturer, apply it evenly to the joint faces in accordance with the manufacturer's instructions. Check the joints frequently to ensure that the newly installed sealant is cured to a tack-free condition within the time specified.

F. Inspection. The Contractor shall inspect the joint sealant for proper rate of cure and set, bonding to the joint walls, cohesive separation within the sealant, reversion to liquid, entrapped air and voids. Sealants exhibiting any of these deficiencies at any time prior to the final acceptance of the project shall be removed from the joint, wasted, and replaced as specified at no additional cost to the airport.

G. Clean-up. Upon completion of the project, remove all unused materials from the site and leave the pavement in a clean condition.

3.3 TESTING REQUIREMENTS

A. ASTM D412 - Standard Test Methods for Vulcanized Rubber and Thermoplastic Elastomers – Tension

B. ASTM C509 - Standard Specification for Elastomeric Cellular Preformed Gasket and Sealing Material

C. ASTM D1644 - Standard Test Methods for Nonvolatile Content of Varnishes

3.4 MATERIAL REQUIREMENTS

A. AC 150/5340-30 - Design and Installation Details for Airport Visual Aids

B. ASTM D789 - Standard Test Method for Determination of Relative Viscosity of Polyamide (PA)

C. ASTM D5893 - Standard Specification for Cold Applied, Single Component, Chemically Curing Silicone Joint Sealant for Portland Cement Concrete Pavements

D. ASTM D6690 - Standard Specification for Joint and Crack Sealants, Hot Applied, for Concrete and Asphalt Pavements

END OF SECTION

SECTION 321540 - DECOMPOSED GRANITE PAVING

PART 1 - GENERAL

1.1 SCOPE

A. Furnish and install all decomposed granite paving as shown and specified.

1.2 RELATED WORK SPECIFIED ELSEWHERE:

A. Section 312200 - Earth Moving

B. Section 321216 - Asphalt Pavement

C. Section 321313 - Concrete Items

1.3 QUALITY CONTROL

A. Standards: Unless otherwise shown or specified, all materials and methods shall conform to the appropriate current sections of:
   1. The State of California, Department of Transportation Standard Specifications (DTSS) Section 20-5.
   2. Applicable ASTM Specifications as they reasonably apply to this work.

B. Tolerances: Tolerances for subgrade, subbase, and finish grade shall be as specified by DTSS except that Contractor shall deliver the full decomposed granite thickness shown. No combination of high and low tolerances that compromise the section will be permitted.

1.4 SUBMITTALS

A. Refer to Section 013300 - Submittal Requirements for submittal procedures.

B. Soil Sterilant: Submit written recommendation from a State of Nevada appropriately licensed individual along with complete product data from proposed manufacturer, for review by City Inspector and/or City's appropriately licensed individual.

C. Decomposed Granite: A one-quart sample with supplier and source clearly indicated of decomposed granite to be used shall be submitted to the City's Representative for approval prior to delivery to the site.

D. Stabilizer: Submit product data.

E. Reviews: Contractor shall stake and layout all paving areas for review by the City's Representative prior to excavation.

F. Samples: The Contractor shall demonstrate to the satisfaction of the City's Representative that he or his subcontractor possesses sufficient skills and experience to perform the work in all aspects required. A five-square-foot sample of decomposed granite paving shall be installed at the site for review and approval by the City's Representative. The Contractor shall meet or exceed that quality of work in all subsequent work. Contractor shall be responsible for the removal of the sample at the completion of work.

PART 2 PRODUCTS

2.1 MATERIALS

A. Soil Sterilant: Shall be a commercially available herbicide recommended for this project by a State of Nevada appropriately licensed individual. The licensed individual shall review the type of construction, soils, base, adjacent plantings, time and season of application, and other project requirements; verify compatibility; and recommend procedures for proper application in accordance with the label. Contractor shall be responsible for all overspray, spreading, or runoff of material into adjacent areas.

B. Decomposed Granite: Decomposed granite, hereafter referred to as "DG", shall be a material with a 3/8" minus gradation, per the following specifications:

Sieve Size	Percent Passing
3/8"	100%
No. 4	85% - 95%
No. 8	70% - 80%
No. 16	50% - 60%
No. 30	40% - 50%
No. 50	25% - 35%
No. 100	15% - 25%
No. 20	10% - 20%

The yellow-brown color of decomposed granite is a requirement for this material.

C. Stabilizer (where indicated): Stabilizer shall be PHP Organic Aggregate Binder, or equal, and added to the DG at the rate of 15 lbs per ton of DG.

PART 3 EXECUTION

3.1 INSTALLATION

A. Soil Sterilant: Shall be applied to the subgrade soil of areas to be paved prior to paving operations; uniformly applied according to the label. Contractor shall take all precautions necessary to avoid spray onto or runoff into planting areas, play areas, or other surfaces.

B. Immediately prior to placing the decomposed granite, the subgrade shall be moistened. The decomposed granite shall be deposited in such a manner as to minimize the necessity for spotting, picking up, or otherwise shifting the decomposed granite. The decomposed granite shall be leveled by raking and compacted by use of a light roller.

C. Fill in any low spots or cracks with additional decomposed granite.

3.2 GRADES

A. The finish grades of the decomposed granite paving shall conform to the lines and grades on the drawings and allow for drainage.

3.3 CLEAN-UP

A. All waste produced as a result of decomposed granite paving construction shall be removed from the site and disposed of legally. All excess decomposed granite shall be removed from planting areas.

3.4 MEASUREMENT AND PAYMENT

A. All work under this section shall be included in the lump sum price bid for decomposed granite paving and shall include full compensation for furnishing all labor, materials, tools, equipment, and incidentals, and for doing all the work involved in decomposed granite paving, and related incidental work.

END OF SECTION

SECTION 321816.13 - PLAYGROUND SAFETY SURFACE

PART 1 GENERAL

1.1 SUMMARY

A. Section includes: Safety surface for playground equipment, including but not limited to:
   1. A resilient, dual durometer, poured in place, trowelable system with a wearing layer upper membrane and an underlying impact attenuation cushion layer over a reinforced, Portland cemented/concrete base atop a subbase of a min. 4" layer of Type II compacted to 95% density. Slope to no greater than ¼" from the centerline to the outer perimeter. Subbase shall be free of all organic matter.
      a. The Reinforced concrete base (on new installations) shall drain water into (3) three 6" diameter sleeved weep drain and directed to (3) 18" wide by 36" deep pea graveled filled sumps. Prepare concrete to obtain optimum bonding to the cushion layer. Remove grease, oil, and other penetrating contaminints.
   2. Accessories required for a complete installation.
   3. The intent of this section is for (new installations) the contractor to provide resilient, full depth safety surfacing for the range of shapes and depths to comply with the location of the playground equipment's landing zones - from conformal to full rectangle, as shown on the drawings and the Critical Fall Height requirements of the playground equipment.
   4. The intent of this section is for (deferred maintenance work) the contractor to restore the existing dual durometer poured in place system to full depth safety surfacing requirements for the range of shapes as defined by the playground equipment and it's landing zones and to comply with the Critical Fall Height requirements as per the existing playground equipment installation.

1.2 RELATED SECTIONS:

A. Section 03 30 00 - Concrete.

B. Section 11 68 13 - Playground Equipment.

1.3 SYSTEM PERFORMANCE REQUIREMENT

A. Impact Attenuation: Comply with ASTM F1292 (Current Edition).
   1. System installed to carry IPEMA Certification to ASTM F1292.
   2. Peak Deceleration: Maximum of 200 G's.
   3. Head Injury Criteria (HIC) - Maximum 1,000.
   4. Critical Heights:
      a. Kindergarten Equipment = 5 feet.
      b. Primary Grades Equipment = 7 feet.
      c. Intermediate Grades Equipment = 7 feet.

B. Permeability: Minimum 8 inches per hour of water flow through surface material.

C. Coefficient of Friction: ASTM Procedure E303.

1.4 QUALITY ASSURANCE

A. Regulatory Requirements:

1. Comply with applicable requirements for the American Disability Act Accessibility Guidelines (ADAAG) for Buildings and Facilities.
2. Surface Burning Characteristics: Self Extinguishing against fire; Class A flame spread rating complying with ASTEM E108.
3. Comply with requirements for IPEMA Certifications for poured - in safety surfacing.
4. Comply with restrictions and requirements of NV Senate Bill 367, relating to diisocyanatos.

B. Manufacturer: Installer shall obtain surface materials from a single manufacturer.

C. Manufacturer Qualifications: Firm having minimum of 5 years documented experience in producing safety surfacing.
   1. Provide references to five (5) specific installations in the last three (3) years.

D. Installer Qualification: The installer must provide competent workmen trained and certified by the manufacturer and skilled in this type of poured in place safety surfacing system installation.
   1. Supervisory personnel assigned to the project must be competent, manufacturer trained and certified in the installation of the material, including mixing of the materials, and spreading and compacting the materials correctly.

E. High Impact Criteria (HIC): Installing contractor to provide personnel for Owner arranged/Owner conducted, CPSI certified personnel performed HIC test on new installations and maintenance work where cushion layer has been replaced or a wide area has been patched.
   1. The Owner may waive the HIC test requirement when the method of restoration is the overlay of wear surface and cushion layer or in certain other conditions.

1.5 SUBMITTALS

A. See Section 013300 - Submittal Requirements, for submittal procedures.

B. Product Data: Technical data, specifications, installation instructions, MSDS (material safety data sheet) and maintenance instruction for each surface layer.
   1. Submit three (3) copies 30 days prior to the start of work to the Project Manager. One copy will be returned Reviewed to the contractor.

C. Shop Drawings: Indicate location and size of each new installation's surface, detail of surface layout, details and concrete edge configuration, substrate and base conditions and materials. Indicate the thickness of safety surfacing materials and location, type, footprint and height of playground equipment to be installed in each new installation.
   1. Submit one (1) copy to the Project Manager.

D. Samples: Provide color samples for Owner use in choosing colors. For new installations, submit two (2) samples, 6" square indicating texture and color selected. For maintenance work, Owner may choose to closely match existing color OR choose a contrasting color.

E. Certification: Provide certification signed by Installer and Contractor stating that the safety surfacing installation complies with all Owner requirements.

F. Test Reports:
   1. Provide testing data for the Impact Attenuations Surfacing Materials that is selected for installation for Owner submission to the Southern Nevada Health District.
   2. Provide reports from independent testing laboratory certifying compliance with ASTM F1292 for critical heights described in paragraph 1.2.A.2. All tests must have been performed within two (2) years of the date of submission.

G. Letter from manufacturer stating the installer is approved or certified to install the manufacturer's safety surface product.

H. Proof of Installer's qualifications and a list of references from installations in Nevada, California or Arizona in the last three years including address and telephone number of points of contacts.

1.6 PROJECT CONDITIONS

A. Grade Control: On new installations, establish and maintain required gradients, lines and elevations. On maintenance projects, match existing gradients, lines and elevations unless otherwise directed by the Owner.

B. Weather: Apply safety surfacing, seal coats within weather tolerances per the manufacturer's recommendation.

1.7 WARRANTY

A. Submit written agreement in manufacturer's standard form signed by Manufacturer, Installer and General Contractor, agreeing to repair or replace defective surfacing due to workmanship or materials for 10 years from the date of Substantial Completion of new installations - 5 years for maintenance cushion layer and wear surface replacement.
   1. No deterioration permitted from ultraviolet rays.
   2. No brittleness or loss of resiliency for a minimum of 2 years due to local conditions.
   3. No spawling or curling of safety surface at concrete curbing surrounding playgounds.
   4. Include general wear and tear.

B. Contractor's Responsibilities: Replace or repair surfacing using the methods approved by the Owner:
   1. Provide source and cost information for materials to Owner.
   2. Provide instruction and training to Owner.
   3. Provide instruction and source material for graffiti removal to Owner.

PART 2 PRODUCTS

2.1 MATERIALS

A. Manufacturer: Provide products complying with the requirements by one of the following or a preapproved equal:
   1. Basis of Design: Glex by Evans Recreation Inc.
   2. FlexGround Poured In Place Safety Surfacing by FlexGround.
   3. Tot Turf by Robertson Industries.

B. Herbicide Treatment:
   1. Ciba-Geigy Corporation
   2. Dow Chemical USA
   3. E.I. DuPont de Nemours & Co.
   4. U.S. Borax and Chemical Co.

C. Polyurethane Primer and Binder: Polyurethane binding agent Methylene Diphenyl Diisocyanate (MDI) based binder with 0% Toluene Diphenyl Diisocyanate (TDI) additive. Primer will be placed between the impact layer and the cap surface.

D. Impact Layer: Combination of 100% Styrene Butadiene Rubber (SBR) black rubber and polyurethane binder. Strands of SBR may vary from 0.5mm – 5mm in thickness, by 1mm – 40mm in length. Binder shall not be less than 14% nor more than 16% of the total weight of the rubber and shall provide 100% coating of the particles. The rubber shall be free of contamination by another material.

E. Cap Surface: Ethylene Propylene Diene Monomer (EPDM) pigmented synthetic rubber granules (1mm to 4mm peroxide or sulphur cured) with minimum EPDM content of 20% Strand, shredded or SBR rubber is not permitted. Cap Surface color shall be: 33% black, 33% tan and 33% light blue.

F. The poured in place safety surface shall be the same mixture as the samples submitted for certified test results.

G. The poured in place safety surface shall be allowed to cure per manufacturer's instructions.

H. Install using the overlay method as directed by the manufacturer. Ensure proper adhesion per manufacturer's instruction to each applied layer and to the existing surface.

I. Provide three (3) bags of EPDM (one of each color) and one (1) gallon of binder to CCSD.

PART 3 EXECUTION

3.1 EXAMINATION

A. Thirty days prior to the start of construction of new playground equipment and safety surfaces work there shall be a preconstruction meeting held to review submittals and the sequence of playground construction work. This meeting shall be attended by the General Contractor, Playground Equipment and Safety Surface Installers, the Project Manager and other CCSD Personnel as deemed necessary by the Project Manager.

B. Prior to the start of demolition of existing playground equipment and safety surfaces work there shall be a preconstruction meeting held on-site to determine the final work scope. This meeting shall be attended by the Primary Contractor and Playground Equipment Installer (if applicable), the Project Manager or by CCSD Personnel directed by the Project Manager.
   1. A work order shall be produced by the Owner that memorializes the final agreed upon scope of work and applied unit costs that totals the sum of money to be expended per playground/per school site. No work shall commence prior to the signatures of the project manager and primary contractor on this work order.

C. For new playground and safety surfaces work the contractor must verify gradients and elevations of the base are correct. Verify the playground layout and drainage system are satisfactory. Verify penetration inserts of playground equipment affecting installation of the safety surfacing are in place prior to the commencement of work. Verify types of playground equipment to be installed with the safety surfacing and thickness of the surfacing complies with the requirements for the intended equipment.

D. For maintenance work: Verify demolition limits. Verify locations of penetration points for equipment replacement are correct. Verify replacement equipment intended for installation complies with requirements for the intended equipment.

3.2 ENVIRONMENTAL SAFETY

A. The primary contractor/safety surface installer is required to have on-site written emergency procedures, MSDS sheets and a spill containment/clean-up plan. Copies of these documents shall be provided to the Project Manager, CCSD Risk and Environmental Services Dept., and the school site 14 calendar days prior to the start of construction.

B. The Project Manager will notice school sites per CCSD Policy 7510 5 calendar days prior to the start of any construction activity.

C. The construction site work area and contractor staging area shall be fenced in according to the specifications to minimize accidental exposure to chemical and other safety hazards.

D. For Maintenance projects: The project manager and contractor shall meet with the site administrator to determine hours of construction work so as not to interfere with school activity as the school will be occupied with students and staff.

3.3 INSTALLATION

A. For new installations: Install below grade Portland cemented pad in accordance with Section 03 30 00 Cast-In-Place Concrete. Verify thickness recommended by the Safety Surface Manufacturer complies with system requirements.

B. For new installations and maintenance work: Install concrete curbing around perimeter of playground per Concrete Curb Detail - Safety Surface and as described in this section.
   1. Install concrete curbing with a 10% vertical inward facing sloped edge.
   2. Top of curbing to match finished pavement grade.
   3. For maintenance work: Ensure demolition for adding concrete curbing is made sufficient to permit the installation of the curbing per the Concrete Curb Detail. Patch to match existing pavement grades necessary asphalt patching.

C. Safety Surface: Comply with manufacturer's installation instructions. Thickness of entire area of full depth surfacing to comply with ASTM F1292 (most current edition) for required critical height of playground equipment installation.
   1. Impact course: Prior to placing the impact or cushion course, apply a 9" - 12" wide coat of urethane resin on the concrete curb and base around the perimeter of the pad. Pour recycled rubber mixture in place, screed and hand trowel for seamless application. A primer coat shall be placed between the impact course and the cap or wear surface. For Maintenance patchwork, apply primer, resin and rubber mixture per manufacturer's recommendation, hand trowel. Apply primer coat between the impact course and the cap or wear surface.
   2. Poured Cap/Wear Surface: Pour EPDM granular rubber mixture, screed and hand trowel for seamless application. Minimum compacted thickness - ½". The cap for any single playground shall be started and completed in a single workday from a single batch of material. There shall be no visible seam lines in the poured cap/wear surface. For maintenance patchwork, pour EPDM granular rubber mixture, screed and hand trowel in area to match existing top surface perfectly.
   3. Safety surfacing shall not be applied if the ambient air temperature is less than 45 degrees F and/or if the base surface is wet. If it starts to rain and/or the air temperature drops below 45 degrees F, operations shall cease.

4. Prior to application of the safety surface, obtain approval of the location of all playground equipment posts and playground area size and shape from the CCSD CPSI certified Inspector. For maintenance work obtain approval for equipment posts of replacement playground equipment from the CCSD CPSI certified Inspector. Arrange appropriate inspections through the Project Manager.

D. Safety Surface Edge: Form edges flush with edge of adjacent area. Slope surface to drain as indicated on drawings for new installations and to match existing grades on Maintenance work.

E. The Contractor shall provide full depth safety surface under and around all playground equipment to a distance of at least 6' in all directions. Exceptions to this will be shown on drawings for new installations and when performing the overlay method - in which case provide depth as indicated. Full depth slide exit distances must comply with current CPSC standards or 8', whichever is greater.

F. Protection: Surface Installer shall be responsible for the protection of safety surface during the installation process and in maintenance projects during the curing period. For new installations on new school playgrounds - the General Contractor shall be responsible for the safety surface during the curing period following completion of the installation.

G. The Landing Zone at the slide exit shall be constructed so as to withstand repeated impact.

H. The General Contractor shall contact CCSD's CPSI Inspector via the Coordinator of the Safety Unit at Risk and Environmental Services so as to coordinate new and/or relocated Playgrounds prior to laying out those areas for construction.

I. The footprint for the equipment as shown on the drawings for new installations may vary in size and general arrangement due to the equipment manufacturer's assembly of their system.

J. The horizontal area (outer edge) of full depth of the safety surface is governed by the equipment footprint.

K. The full thickness of the safety surface is determined by the manufacturer's testing criteria.

L. The precise square foot area of safety surface shall be established from approved shop drawings, submittals, and field verification of the arrangement and orientation of the playground equipment so as to minimize student injury from sun exposure and heat radiance upon the equipment and ADA compliant access to the transfer deck.

3.4 TOLERANCES

A. Flatness: Maximum variation of ¼" (6mm) measured with a 10 ft. (3m) straight edge.

B. Scheduled Compacted Thickness: 1/8" (3mm).

C. Variation from true elevation: Within 1/8" (3mm).

END OF SECTION

SECTION 323113 - CHAIN LINK FENCE AND GATES

PART 1 GENERAL

1.1 SECTION INCLUDES

A. Fence framework, fabric, and accessories.

B. Excavation for post bases and concrete foundations for posts.

C. Manual gates and related hardware.

1.2 RELATED SECTIONS

A. Section 033000 - Cast-in-Place Concrete: Concrete anchorage for posts.

B. Section 087100 - Door Hardware: Gate locking device.

1.3 REFERENCE STANDARDS

A. ASTM A123/A123M - Standard Specification for Zinc (Hot-Dip Galvanized) Coatings on Iron and Steel Products; 2017.

B. ASTM A153/A153M - Standard Specification for Zinc Coating (Hot-Dip) on Iron and Steel Hardware; 2016a.

C. ASTM A392 - Standard Specification for Zinc-Coated Steel Chain-Link Fence Fabric; 2011a (Reapproved 2017).

D. ASTM A653/A653M - Standard Specification for Steel Sheet, Zinc-Coated (Galvanized) or Zinc-Iron Alloy-Coated (Galvannealed) by the Hot-Dip Process; 2020.

E. ASTM C94/C94M - Standard Specification for Ready-Mixed Concrete; 2021b.

F. ASTM F567 - Standard Practice for Installation of Chain-Link Fence; 2014a (Reapproved 2019).

G. ASTM F1083 - Standard Specification for Pipe, Steel, Hot-Dipped Zinc-Coated (Galvanized) Welded, for Fence Structures; 2018.

H. CLFMI CLF-FIG0111 - Field Inspection Guide; 2014.

I. CLFMI CLF-PM0610 - Product Manual; 2017.

J. CLFMI CLF-SFR0111 - Security Fencing Recommendations; 2014.

K. CLFMI WLG 2445 - Wind Load Guide for the Selection of Line Post and Line Post Spacing; 2018.

1.4 SYSTEM DESCRIPTION

A. Fence Height: 6 feet, 8 feet, 12 feet and 16 feet nominal, as scheduled.

B. Line Post Spacing: At intervals not exceeding 10 feet.

C. Backstops: See plan for arrangement.

1.5 SUBMITTALS

A. Submit under provisions of Sections 01 3300.

B. Shop Drawings: Indicate plan layout, spacing of components, post foundation dimensions, hardware anchorage, and schedule of components.

C. Product Data: Provide data on fabric, posts, accessories, fittings, and hardware.

D. Manufacturer's Installation Instructions: Indicate installation requirements, post foundation anchor bolt templates.

1.6 PROJECT RECORD DOCUMENTS

A. Accurately record actual locations of property perimeter posts relative to property lines.

1.7 QUALITY ASSURANCE

A. Perform work in accordance with CLFMI - Product Manual, Manufacturer's instructions, and Uniform Standards.

B. Framework performance Test: Pipe and tubing shall meet the following performance criteria when subjected to salt spray testing in accordance with ASTM B117:
   1. Exterior – One thousand (1,000) hours with maximum five (5) percent red rust.
   2. Interior – 650 hours with maximum five (5) red rust.

C. Maintain one (1) copy of each document on site.

1.8 QUALIFICATIONS

A. Manufacturer: Company specializing in manufacturing the products specified in this Section with minimum three years documented experience with chain link fences and gates.

1.9 FIELD MEASUREMENTS

A. Verify that field measurements are as indicated on shop drawings.

PART 2 PRODUCTS

2.1 MATERIALS

A. Framework:
   1. Steel pipe conforming to Standard Specification ASTM F1043 Group 1A (Schedule 40).
      a. External coatings per F1043 type A.
      b. Internal coatings Type A.
   2. High strength steel pipe triple coated per Standard Specification ASTM F1043 Group 1C (SS40 as manufactured by Allied Tube & Conduit or approved equal).
      a. External coating per F1043 Type B.
      b. Internal coatings per F1043 Type D.

B. All coatings to be applied after welding.

C. Pipe shall be straight, true to section and conform to the following weights:

Pipe Size Outside Diameter	Group Schedule 40 IA Weight Lbs./Ft.	Group SS 40 IC Weight Lbs./Ft.
1-5/8"	2.27	1.84
1-7/8"	2.72	2.28

2-3/8”	3.65	3.12
2-7/8”	5.79	4.64
3-1/2”	7.58	5.71
4”	9.11	6.56
6-5/8”	18.97	Use sch 40
8-5/8”	29	Use sch 40

D. Concrete: As specified in Section 03 30 00, conforming to ASTM C94, Type V, sulfate resistant, having a minimum compressive strength of 4,500 PSI at 28 days.

2.2 COMPONENTS

A. Materials and Components: Conform to CLFMI Product Manual.

B. Fabric Size: CLFMI heavy Industrial service.

C. Fence Posts:

Fabric Height	Line Post O.D.	Terminal Post O.D.
Up to 6’	1-7/8”	2-3/8”
6’ to 8’	2-3/8”	2-7/8”
8’ to 12’	3-1/2” *	4”

D. Swing Gate Posts:

Single Gate Width	Double Gate Width *	Post O.D.*
Up to 6’	Up to 12’	2-7/8”
6’ to 12’	13’ to 24’	4”
12’ to 18’	25’ to 36’	6-5/8”
Over 18’	Over 36’	8-5/8”

E. Rails and braces: 1-5/8 inch galvanized steel O.D.
   1. Top Rail: Manufacturer’s longest lengths, with couplings, approximately 6 inches long, for each joint. Provide means for attaching rails securely to each gate, corner, pull and end post. 1-5/8 inch diameter high strength galvanized steel pipe.
   2. Truss Rod: 0.375 inch OD hot dipped galvanized steel rod and adjustable tightener.
   3. Middle and Bottom Rail:
      a. If indicated on plans, shall be 1-5/8 inch OD galvanized steel pipe.
      b. Fences 10’ or higher shall have a midrail.
      c. Unless noted on plans, provide tension wire in lieu of bottom rail

F. Gates:
   1. Frame assembly of 1-7/8 inch galvanized steel O.D. pipe with welded joints. Weld areas repaired with zinc-rich coating applied per manufacturer’s directions.

2. Gate fabric to match fence fabric.
3. Gate accessories, three hinges per gate panel (unless otherwise noted), latches, center stops, keepers and necessary hardware of quality required for industrial and commercial application. Latches shall permit padlocking.
4. All personnel gates in fences taller than 7 feet shall have transoms.
5. Chain and lock: Provide a Master Lock (key code: 3303) welded to 30 inches length of 3/8 inch chain welded to the gate frame at approximately the height of the drop latch. Weld shall not interfere with operation of drop latch.
6. Double Gate Hardware:
   a. Fork latch with gravity drop, center gate stop and drop rod.
   b. Three (3) ball and socket type gate hinges per leaf (Master Halco 180 degrees Box Industrial Hinge no exceptions) and hardware for padlock.
   c. Industrial malleable iron - galvanized, 180-degree swing hinges are to be used to allow the gate to open fully against the fence so as to be able to lock the gate in the open position with chain and lock.
7. Hardware for Single Swinging Gates: 180 degree hinges, 2 for gates up to 60 inches high, 3 for taller gates; fork latch with gravity drop and padlock hasp; keeper to hold gate in fully open position.
   a. Three ball and socket type hinges (unless otherwise noted) (Master Halco 180 degrees Box Industrial Hinge-no exceptions) and hardware for padlock. Industrial malleable iron-galvanized.
   b. 180 degree swing hinges are to be used to allow the gate to open fully against the fence so as to be able to lock the gate in the open position with chain and lock.
8. Hardware for Double Swinging Gates: 180 degree hinges, 2 for gates up to 60 inches high, 3 for taller gates; drop bolt on inactive leaf engaging socket stop set in concrete, active leaf latched to inactive leaf preventing raising of drop bolt, padlock hasp; keepers to hold gate in fully open position.
9. Hinges will not have any bolts or other protrusions that could cause injury or catch clothes.

G. Hinges: Finished to match fence components.
   1. Brackets: Round.
   2. Mounting: Center.
   3. Closing: Manual.

H. Latches: Finished to match fence components.
   1. Brackets: Round.
   2. Locking: Magnetic.

I. Fittings:
   1. Post Caps: Hot dipped galvanized pressed steel or hot dipped galvanized cast iron designed to fit snugly over posts to exclude moisture. Supply dome style caps for terminal posts and loop type for line posts.
   2. Rail and Brace Ends: Pressed steel or cast iron cup-shaped to receive rail and brace end.
   3. Tension Bars: Steel strip, 3/4 inch wide, 1/4 inch thick.
   4. Brace Bands: Pressed steel, 12 gauge thickness 3/4 inch wide.
   5. Tension Wire: Marcelled 7 gauge steel wire with minimum coating of 0.80 ounces of zinc per square foot of wire surface (ASTM A824)
   6. Tie Wires: Steel, 12 gauges.

7. Hog Rings: Steel wire, 9 gauges, with a minimum zinc coating of 0.80 ounces per square foot of wire surface.

2.3 FINISHES

A. Components: Galvanized to ANSI/ASTM A123; 2.0 oz/sq ft coating.

B. Components (Other than Fabric): Galvanized in accordance with ASTM A123/A123M, at 1.7 ounces per square foot.

C. Components and Fabric: Vinyl coated over coating of 1.8 ounces per square foot galvanizing.
   1. Color(s): To be selected by Architect from manufacturer's standard range.

D. Hardware: Galvanized to ASTM A153, 2.0 oz/sq ft coating.

E. Accessories: Same finish as framing.

PART 3 EXECUTION

3.1 INSTALLATION - FENCING

A. Install framework, fabric, accessories and gates in accordance with manufacturer's instructions, approved shop drawings and in conformance with ASTM F567 for standard fencing and ASTM F969 for Tennis Court fencing.

B. General: Installation to conform to the following chart unless otherwise specified on the plans.

	Post Diameter						
	1 7/8"	2 3/8"	2 7/8"	3 1/2"	4"	6 5/8"	8 5/8"
Footing Diameter	12"	12"	12"	14"	16"	24"	24"

	Height of Post													
	4'	5'	6'	7'	8'	9'	10'	11'	12'	13'	14'	15'	16'	17'	18' +
Footing Depth	30"	30"	30"	33"	36"	39"	42"	45"	48"	48"	48"	48"	60"	60"	60"

C. All gate hinge and latch post footings shall be a minimum of 36” deep.

D. Install framework, fabric, accessories, and gates in accordance with approved shop drawings and contract drawings.

E. Space line posts at intervals not exceeding 10 feet on center.

F. Set intermediate, terminal, and gate posts plumb, in concrete footings. Slope top of concrete for water runoff.

G. Provide 8-inch diameter by 12-inch deep concrete footing for center and drop rod retainers at center of double gate openings.

H. Brace each gate and corner post to adjacent line post with horizontal center brace rail and diagonal truss rods.

I. Provide top rail through line post tops and splice with rail sleeves.

J. Adjust gates for proper operation, freedom of movement with no binding and lubricate hinges.

K. Tack weld single gate fork latch assembly to prevent rotation.

L. Tack weld all double gate drop rod clips to gate frame to prevent rotation.

M. Do not attach gates to walls; provide gate posts adjacent to walls.

N. All field welds are to be cleaned and painted with galvanized paint.

3.2 ERECTION TOLERANCES

A. Maximum Variation from Plumb: 1/4 inch.

B. Maximum Offset from True Position: 1 inch.

C. Components shall not infringe on adjacent property lines.

3.3 SCHEDULES

A. Fencing Bike Lot Area: 8 feet high, with sloped lid**.**

B. Fencing at Service yards: 6 feet high.

C. **Perimeter Fencing: 6 feet high.**

END OF SECTION

SECTION 324200 - PRECAST STORM CONCRETE ITEMS

PART 1 GENERAL

1.1 SUMMARY:

A. This section includes the following:
   1. Precast manholes, catch basins and drop inlets
   2. Precast flared end-sections
   3. Concrete headwalls

1.2 APPLICABLE PUBLICATIONS:

A. The publications listed below form a part of this specification to the extent referenced. The publications are referred to in the text by the basic designation only.

B. American Society for Testing and Materials (ASTM) Publications:

C. Standard Specifications for Road and Bridge Construction (“Silver Book”), published and distributed by the Nevada Department of Transportation (NDOT), dated 2014.

1.3 SUBMITTALS:

A. Refer to Section 013300 - Submittal Requirements for submittal procedures.

B. Precast structure submittals shall conform to the requirements of Section 502 of the Silver Book.

C. Manufacturers Certificates of Compliance:

D. Submit any field test data not listed above sufficiently in advance of construction so as not to delay work.

1.4 DELIVERY AND STORAGE:

A. Deliver and store materials in a manner to prevent contamination, segregation, freezing, and other damage.

PART 2 PRODUCTS

2.1 MATERIALS:

A. Materials shall conform to the Specifications and Section 502.02.01 of the Silver Book.

PART 3 EXECUTION

3.1 GENERAL EXCAVATION:

A. General Excavation shall conform to Section 31300 of the Specifications and Section 604.03 of the Silver Book.

3.2 GENERAL BACKFILLING:

A. General Backfilling Bedding shall conform to Section 31300 of the Specifications and Section 207.03 of the Silver Book.

B. Compact to 90 percent of ASTM D 1557 maximum density.

C. Compaction of Backfill: Compact initial backfill material surrounding pipes, cables or conduits to 90 percent of ASTM D1557 maximum density except where bedding and backfill are the same material. .

3.3 FINISH OPERATIONS:

A. Grading: Finish to grades indicated to lines and grades shown on the plans. Grade existing grades that are to remain but have been disturbed by the Contractor's operations.

B. Disposition of Surplus Material: Surplus or other soil material not required or suitable for filling, backfilling, or grading shall be removed from the Owner's property by contractor and disposed off-site.

C. Protection of Surfaces: Protect newly graded areas from erosion, and settlements that may occur. Repair or reestablish damaged grades, elevations, or slopes.

3.4 FIELD SAMPLING AND TESTING;

A. Backfill and Compaction testing to be performed by owner designated firm.

END OF SECTION

SECTION 328400 - PLANTING IRRIGATION

PART 1 - GENERAL

1.1 SCOPE

A. Work in this section includes installation of a complete automatic irrigation system, including excavation for points of connection, trenching, piping, equipment, electrical components and incidentals related thereto.

1.2 QUALITY CONTROL

A. Standards: Unless otherwise shown or specified, all materials and methods shall conform to section 213 of the Nevada Department of Transportation Standard Specifications (DTSS) as they reasonably apply to this work except for measurement and payment requirements.

B. Reviews: Contractor shall specifically request the following reviews prior to progressing with the work:
   1. Layout of system.
   2. Points-of-connection excavation.
   3. Trenching and pipe assembly.
   4. Coverage adjustment of all heads and valve box installation.
   5. Operation of system.

PART 2 PRODUCTS

2.1 MATERIALS

A. Quality: All materials shall be new and the best quality available unless otherwise specified. All materials shall be clearly marked by manufacturer on all material, containers, or certificates of contents for inspection.

B. Plastic Pipe and Fittings: All mainline pipe ¾” – 1-½” in size shall be polyvinyl chloride (PVC) Schedule 40; sizes 2” and larger shall be Class 315. Unless otherwise noted, all laterals shall be Class 200 PVC pipe; solvent weld fittings, if used, shall be Schedule 40, or Schedule 80 as called for on details. Solvent for piping shall be as recommended by manufacturer. All pipe shall be clearly labeled with manufacturer type and specification numbers.

C. (Insert the following material if specified on the drawings) Copper Pipe: Hard-drawn copper piping, type "K".

D. Control Wire: Type UF, 600 v. insulation, minimum size #14, copper, common to be white, valve control wire to be red or black, U.L. approved for irrigation control use; splices shall be "Scotch-Lok" seal pack, or equal.

E. Valve Boxes: Precast concrete or plastic of type and size indicated; free of all cracks, chips or structural defects. Boxes located in pavement (asphalt or concrete) and/or subject to vehicular traffic shall be concrete and have heavy duty steel covers. Boxes shall be sized to provide a 4” minimum clearance around the irrigation equipment inside the box, excluding all pipes and fittings.

F. Decoder to Solenoid Wiring: Type UF, 600 v. insulation, minimum size #14, copper, U.L. approved for irrigation control use; splices shall be "Scotch-Lok" seal pack, or equal.

G. Two-Wire Cable: Two-wire cable and two-wire cable splices shall be per plans.

H. Two-Wire Decoders: Shall be per plans.

I. Two-Wire Grounding: Two-wire grounding plate and earth contact material shall be per plans.

J. Irrigation Equipment: Refer to drawings. Any desired substitutions require submittals in duplicate for specific written approval.

K. Thread Sealant: Permatex Thread Sealant, part #14H, white in color.

PART 3 EXECUTION

3.1 GRADING:

A. Contractor shall be responsible for installing all irrigation features to their finished grade and at depths indicated. All rough grading shall be completed before trenching commences.

3.2 LAYOUT AND TRENCHING:

A. All features of the irrigation system shall be staked and pipe alignments marked prior to trenching for review by the City's Representative.

3.3 BACKFILLING:

A. Do not cover joints until system has been reviewed by the City's Representative. Backfill with damaging rocks and debris shall not be permitted. Compact all backfill and eliminate settlement. Previously prepared soil is to be replaced as the top six inches of backfill.

3.4 FABRICATION:

A. Snake pipe from side to side when trench exceeds thirty feet in length. All manifolds shall be neat, orderly, and constructed for ease in maintenance operations. Construct manifolds to allow valve boxes to be parallel to each other and to adjacent walls, walks, curbs, and buildings. Cuts and joints shall be free of burrs, smooth, and minimum in quantity. All pipe above finish grade shall be galvanized unless noted otherwise.

3.5 PIPELINES:

A. All pipelines shown parallel on the drawing may be installed in a common trench. Where pipelines are shown parallel or adjacent to shrub or groundcover areas, they shall be installed in these areas. All changes in depth of pipe shall be accomplished using 45-degree fittings.

3.6 TESTING:

A. Test mainline at 125 psi for six (6) hours. Test and repair as necessary until satisfactory test conditions are obtained.

3.7 CONTROL WIRE:

A. Install control wire in pipe trenches wherever practical. Tape to underside of pipe every ten feet. Loop wire every 20 feet. Splices shall occur in valve boxes only and shall be accomplished utilizing

approved connectors. All wire shall be installed below or level with the bottom of adjacent pipes. All wiring above finish grade shall be enclosed in steel conduit. Splices shall be installed in junction boxes.

3.8 ADJUSTMENTS:

A. Adjust all heads for arc, radius, riser height, and distribution for uniform and optimum coverage. Such adjustments shall include nozzle changes without additional cost to the City.

3.9 FINISH GRADE:

A. Unless otherwise noted, all heads shall be set at finish grade and on double or triple swing joints as called for on drawings. The top of all valve boxes shall be flush with finish grade.

3.10 CONTROLLER:

A. Contractor shall clearly label and sequence stations for ease in maintenance operations. Station valves to operate as they are located around the site. Fasten controller and wire conduits securely to wall with conduit clamps and screws. Contractor shall complete all forms and labels shipped with and/or attached to the controller; attach his own name, address and phone number to the controller via a permanent label; and shall properly execute and file with the City the controller and valve guarantees.

3.11 EQUIPMENT PAD:

A. Controller concrete enclosure pad shall be per plans and Section 321313 Concrete Items.

3.12 RECORD DRAWING:

A. ontractor shall regularly update a print of the system and any changes made to the system throughout the project. Features below ground shall be indicated with at least two measurements from surface features such as walks, building, or sprinkler heads. All changes shall be recorded on this plan before trenches are backfilled. The record drawing shall be completed and submitted to the City before final payment shall be made for work installed.

3.13 MEASUREMENT AND PAYMENT

A. All work under this section shall be paid for at the lump sum price bid for PLANTING IRRIGATION and shall include full compensation for furnishing all labor, materials, tools, equipment, and incidentals, and for doing all the work involved in PLANTING IRRIGATION, and related incidental work.

END OF SECTION

SECTION 329113 - LANDSCAPE SOIL PREPARATION

PART 1 -GENERAL

1.1 SCOPE

A. Furnish and install all landscape soil preparation as shown and specified, including, but not necessarily limited to, the following: soil testing, stockpiling of native soil, topsoil placement, organic amendment, fertilizer, and finish grading.

1.2 QUALITY CONTROL

A. Reviews: Contractor shall specifically request at least two working days in advance of the following reviews prior to progressing with the work:
   1. Completion of rough grading
   2. Verification of amendment incorporation depths
   3. Finish grade

B. Certification: Written certificates stating quantity, type, and composition, weight and origin for all amendments and chemicals shall be delivered to the City's Representative before the material is used on the site.

C. Soil Testing: Contractor shall provide soil samples to Waypoint Analytical, Inc. of Anaheim, (714) 282-8777 for testing in accordance with these specifications. Test results shall be made available to the City's Representative. Contractor shall allow sufficient time for testing prior to preparing soil for planting.
   1. The following soils tests are required under these specifications:
      a. Native Soil: Prior to construction, Contractor shall submit native soil for horticultural soil analysis, consisting of one-quart samples from proposed container planting areas. Sample shall be a representative composite taken from several planting areas.
      b. Pre-Plant: Following amendment and fine grading and prior to installation of plant material, contractor shall submit for horticultural soil analysis: one quart-sized sample of in-place topsoil. Sample shall be a representative composite taken from several planting areas.
      c. If test results indicate that soils fail to meet the specifications, contractor shall retest and resubmit until a passing result is obtained.
      d. Testing costs for initial samples and costs for any additional samples due to non-compliance shall be paid for by the Contractor.
      e. No material shall be delivered to the site until the City's Representative approves the material.
      f. Contractor shall allow for sufficient time for testing prior to construction.

D. Amendment Samples: Contractor shall provide an analysis of the amendment from a Seal of Testing Assurance (STA) Certified Compost Lab, designated by the US Composting Council. Or, send a one-gallon sample of each proposed amendment to Waypoint Analytical, Inc. of Anaheim, (714) 282-8777, for their testing for conformance to this specification. No material shall be delivered to the site until the Owner's Representative approves the samples. Testing costs shall be paid for by the Contractor. If an alternate laboratory is used, they must be an approved US Composting Council Seal of Testing Assurance laboratory, using test methods described in the TMECC test methods manual.

1. No material shall be delivered to the site until the City's Representative approves the samples.
2. Testing costs shall be paid for by the Contractor.
3. If an alternate laboratory is used, the laboratory must be STA certified by the USCC, using test methods described in the "Test Methods of the Examination of Composting and Compost" (TMECC) test methods manual.

E. Planting Areas: All areas to be planted, whether in container stock, flats, or otherwise, are defined as planting areas in these documents.

PART 2 PRODUCTS

2.1 MATERIALS

A. Native Topsoil: Shall be the existing surface layer of soil on site. This layer typically will be a different color and texture than the subsoil, and may be of varying thicknesses. The Contractor shall be responsible for reviewing the area limits and depths of native topsoil on site with the City's Representative.

B. Import Topsoil: Shall be a homogeneous mineral soil classified as loam, sandy clay loam, or sandy loam with clay content between 15 and 25%. The sum of silt plus clay shall be less than 35%. Import topsoil shall not contain more silt and clay than the on-site native soil.
   1. Particle size data shall be based upon standard USDA methodology. Of the material falling in the sand category, a minimum of 50% shall fall in the fine sand range .05 - 5mm. Gravel content greater than 2.0mm shall be less than 15%.
   2. Soil chemistry shall be suitable for growing the plants specified; the soil shall be non-saline as determined on the saturation extract. Salinity shall not exceed 3.0 mmhos/cm, boron shall not exceed 1.0 ppm and the sodium absorption ratio (SAR) shall not exceed 6.0. Soil reaction as determined on a saturated paste shall fall between 5.5 and 7.5.
   3. The soil shall be free of organic herbicides, or other growth-restricting chemicals. Contamination may be tested by greenhouse trials using rye grass and radish as test crops using the proposed import soil as substrate. These trials require four to five weeks for completion.

C. Fertilizer: Types and application rates shall be determined from soils analysis results. For purposes of bidding only, assume the use of 6-20-20 commercial fertilizer, 20-10-5 planting tablets by Agriform International Chemicals, Inc., and iron sulfate.

D. Organic Amendment:
   1. Compost: Shall be Z-Best's Organic Compost available through Z-Best Composting (408) 846-1574 shall conform to:
      a. Seal of Testing Assurance Program from the US Composting Council.
      b. Compost parameters, below:

Property	Test Method	Unit of Measurement	Requirement
pH	TMECC 04.11-A Elastomeric pH 1:5 slurry method pH	units	6–8.5
Soluble salts	TMECC 04.10-A Electrical conductivity 1:5 slurry method	dS/m (mmhos/cm)	0– 10

Moisture content	TMECC 03.09-A Total solids & moisture at 70 ± 5 °C	% wet weight basis	30-60
Organic matter Content	TMECC 05.07-A Loss-on-ignition organic matter method (LOI)	% dry weight basis	30–60
Maturity	TMECC 05.05-A Germination and vigor	% relative to positive control	Seed emergence 80 or above Seedling vigor 80 or above
Stability	TMECC 05.08-B Carbon dioxide evolution rate	mg CO_2-C/g OM per day	4 or below
Pathogen	TMECC 07.01-B Salmonella < 3 MPN per 4 grams, dry weight basis	Pass/ Fail	Pass
Pathogen	TMECC 07.01-B Fecal coliform bacteria < 1,000 MPN per gram, dry weight basis	Pass/ Fail	Pass
Physical contaminants	TMECC 02.02-C Man-made inert removal and classification: Plastic, glass, and metal % > 4 mm fraction	% dry weight basis	combined total: < 0.5%
Physical contaminants	TMECC 02.02-C Man-made inert removal and classification: Sharps (sewing needles, straight pins and hypodermic needles) % > 4mm fraction	% dry weight basis	none detected
Particle size fine for compost used as soil amendment	TMECC 02.02-B Sample sieving for aggregate Size classification	% dry weight basis	Pass 2”-inch sieve 98% min Pass 3/8-inch sieve 95% min
Heavy metals	PASS / FAIL	mg/kg (ppm), dry weight basis	All EPA 503 metal contaminant limits
Carbon:Nitrogen Ratio		Carbon : Nitrogen	≤25:1

Note: TMECC refers to "Test Methods for the Examination of Composting and Compost," published by the United States Department of Agriculture and the United States Compost Council (USCC). (Table modified from the US Composting Council Landscape Architectural Specifications 2005.)

2. Nitrogen-treated Fir Bark shall conform to:
   a. Physical Properties: 95%-100% passing, sieve size 6.35mm (1/4 inch), 80%-100% passing, sieve size 2.38mm (No. 8, 8 mesh), and 0%-30% passing, sieve size 500 micron (No. 35, 32 mesh)
   b. Chemical Properties: Nitrogen Content (dry weight basis) - 0.4-0.6% iron content - minimum 0.08% dilute acid soluble Fe on dry weight basis, soluble salts - maximum 3.5 millimhos/centimer @ 25 degrees C. as determined by saturation extract method; ash - 0-6.0%

PART 3 EXECUTION

3.1 LIMITS AND GRADES

A. Grade Review: Prior to commencing soil preparation operations, Contractor shall request a review by the City's Representative to verify specified limits and grades of work completed to date and soil preparation work to commence. Contractor shall complete the rough grading as necessary to round the top and toe of all slopes, providing naturalized contouring to integrate newly graded areas with the natural topography. Finish grading under this section shall be completed in accordance with the grades indicated on the drawings.

3.2 STRIPPING AND STOCKPILING OF EXISTING TOPSOIL

A. Excavation Areas: The native topsoil shall be stripped and stockpiled on-site in sufficient quantities to provide a six-inch layer throughout all planting areas. Topsoil to be stripped and stockpiled shall be taken from the surface layer after all organic litter and foreign debris has been removed and properly disposed.

B. Existing Grade Unchanged: In those areas where grades are not proposed to be modified (areas of no excavation or fill) the native topsoil shall be left in place. All debris, as well as all rocks over 0.75 inches in diameter, shall be removed from the surface of planting areas.

3.3 TOPSOIL PLACEMENT

A. Soil Moisture: If soils are saturated, suspend soil work operations until the soil moisture drains to below field capacity.

B. Subgrade preparation: Excavate planting areas to the proposed subgrade and remove all construction debris and materials.
   1. Do not over excavate compacted subgrades of adjacent pavement or structures.
   2. Subgrades shall slope approximately parallel to the finished grade and/or toward the subsurface drain lines as shown on the drawings.
   3. Scarify or rip to a depth of seven inches and protect from compaction.
   4. Topsoil Incorporation: Uniformly distribute a three-inch layer of topsoil and incorporate into the top six inches of subsoil by ripping, scraping, or tilling to mix the subsoil with the topsoil into a homogeneous mixture. Repeat until the total depth of topsoil placed is as indicated on the drawings. The final layer of topsoil shall be uniformly distributed in the planting areas and compacted in place to 85% compaction
   5. Existing Topsoil to Remain: Except within tree protection zones, in those planting areas where native topsoil is to be left in place, cross rip to a depth of ten inches. Then incorporate the amendments to a homogeneously blended soil depth of six inches.

3.4 ORGANIC AMENDMENT AND FERTILIZER INCORPORATION

A. Organic amendment: After topsoil placement and compaction, spread organic amendment at a rate of 6 cubic yards per 1000 square feet, unless otherwise specified by the soils report.

B. Fertilizer: Spread uniformly on top of compost at rates determined by soil tests. For bidding, assume per 1000 square feet:
   1. 30 pounds commercial fertilizer (6-20-20)
   2. 10 pounds iron sulfate

a. Note: Iron sulfate should be applied cautiously, avoiding contact with concrete, since permanent staining may result. Any such stained concrete shall be replaced at Contractor's expense.

C. Incorporate organic amendment and fertilizer into the top 6 inches of topsoil, until homogeneously blended.

3.5 PLANT PITS

A. Plant Pit Preparation: Plant pits shall have their sides and bottoms loosened or otherwise broken to prevent glazed or compacted surfaces and shall be as shown on the planting detail.

3.6 BACKFILL

A. Backfill Material and Placement: Only unamended soil shall be used beneath the root ball; cultivate bottom of plant pit to improve porosity. Backfill around sides of rootball shall be the amended soil taken from adjacent prepared areas. Spread material excavated from plant pits onto adjacent areas as replacement. Should additional backfill be necessary, a mixture of one-third organic amendment/fertilizer mix and two-thirds topsoil may be used for the top 12 inches of backfill.

3.7 PLANT PACKETS

A. Packet Quantities: All container plants shall receive plant packets as follows:
1. one-gallon plants one 10-gram packets
2. five-gallon plants two 10-gram packets
3. fifteen-gallon plants nine 10-gram packets
4. 24 inch box trees sixteen 10-gram packets
5. 36 inch box trees twenty-four 10-gram packets

B. Space the packets evenly around the root ball in backfill, 6-8 inches from soil surface, 1 inch away from root ball. City's Representative may require excavation of up to 5% of all plants selected at random for conformance review.

3.8 FINISH GRADING

A. Grading Operations: Contractor shall finish grade all irrigated planting areas unless otherwise noted, and shall remove all rocks and clods over one cubic inch to a depth of one inch below finish grade. All areas shall be smooth and uniformly graded. All erosion damage during the construction period shall be repaired by the Contractor.

B. Finish Grades: Unless otherwise noted, all soil finish grades shall be one inch below finish grade of walks, pavements, and curbs.

3.9 MEASUREMENT AND PAYMENT

A. All work under this section shall be included in the lump sum price bid for landscape soil preparation and shall include full compensation for furnishing all labor, materials, tools, equipment, and incidentals, and for doing all the work involved in landscape soil preparation, and related incidental work.

END OF SECTION

SECTION 329300 - PLANTING

PART 1 GENERAL

1.1 SCOPE

A. Furnish and install all container plantings, groundcover, root barrier, mulch, headboard, staking, and related work thereto.

1.2 REFERENCES

A. Interpretations of plant names and descriptions shall reference the following documents. Where the names or plant descriptions disagree between the several documents, the most current document shall prevail.
   1. USDA – The Germplasm Resources Information Network (GRIN) www.ars-grin.gov/npgs/searchgrin.html.
   2. Manual of Woody Landscape Plants; Michael Dirr; Stipes Publishing, Champaign, Illinois; most current edition.
   3. New Sunset Western Garden Book, Oxmoor House, most current edition.

B. ANSI American Standard for Nursery Stock

C. Federal, State, and County laws requiring inspection for plant disease and insect control.

1.3 QUALITY CONTROL

A. Reviews: The Contractor shall specifically request the following reviews prior to progressing with the work:
   1. Plant material approval
   2. Plant layout
   3. Finish grade
   4. Substantial completion
   5. Final completion

1.4 SUBMITTALS

A. Refer to Section 013300 - Submittal Requirements for submittal procedures.

B. Plant Material: Within (15) fifteen days after award of contract, Contractor shall submit notice to the City's Representative certifying the quantity and species of plant material ordered, the nursery supplying the material, any plant material unavailable at the time, and proposed plant substitutions. No plants shall be ordered or delivered prior to written acceptance by the City's Representative.

C. Mulch: Name of supplier and one quart-sized sample.

D. Certificates: All plant materials shall meet the specifications of Federal, State, and County laws requiring inspection for plant diseases and insect infestations. Inspection certificates required by law shall accompany each shipment, invoice, or order of stock, and when such plants arrive at the site of work, the certificate of inspection shall be filed with the City's Representative.

PART 2 PRODUCTS

2.1 MATERIALS

A. Nomenclature and Labels: Plant botanical names shall conform to current literature noted in section 1.2. All plants of each clone, species, and cultivar shall be delivered to the site labeled with their full botanical names. Every plant species shall be labeled with no less than one label for every ten plants of a species.

B. Quality: Minimum quality of all plant material shall conform to prevailing published specifications of the California Association of Nurserymen and the American Association of Nurserymen's American Standard for Nursery Stock unless otherwise indicated. Additional specifications shall be indicated on the drawings.

C. Quantities: The quantities shown on the plant list and in labels are for the City's Representative's use and are not to be construed as the complete and accurate limits of the contract. Contractor shall furnish and install all plants shown schematically on the drawings. Any unlabeled plants shall be considered as the smaller size shown for that type on the drawings.

D. Root Systems: All container-grown stock shall be grown in its container for at least six months prior to its planting. Contractor shall allow one percent of the quantity of plants for removal and inspection. Any plant material, within one year following the final acceptance of the project, determined by the City's Representative to be defective, restricted, declining or otherwise deficient due to abnormal root growth, shall be replaced by Contractor to the equal condition of adjacent plants at the time of replacement.

E. Trees: All trees shall have straight trunks of uniform taper, larger at the bottom. Trunks shall be free of girdling roots or damaged bark, with all minor abrasions and cuts showing healing tissue. Sucker basal growth and sucker lateral growth shall be removed and treated to eliminate re-sprouting. Normal lower side branching shall remain. Trees unable to stand upright without support shall be rejected.

F. Health: Foliage, roots and stems of all plants shall be of vigorous health and normal habit of growth for its species. All plants shall be free of all diseases, insect stages, burns, or disfiguring characteristics.

G. Untrue Species: All plant material, within two years following the final acceptance of the project, determined by the City's Representative to be untrue to the species, clone, and/or variety specified, shall be replaced by the Contractor, to the equal condition of adjacent plants at the time of replacement.

H. Mulch: shall be per plans.

I. Headerboard: shall be per plans.

PART 3 EXECUTION

3.1 GENERAL

A. Plant Material Approvals: Before planting operations commence, all or a representative sampling of plant material shall be reviewed at the site by the City's Representative. Defective plants

installed without such review shall be removed from the site upon request by the City's Representative and an acceptable plant substituted in its place.

B. Storage and Handling:
   1. Plant materials shall be protected and maintained in good condition. Bare root and balled materials shall be watered regularly and placed in a cool area. Plant material shall be protected at all times from animal damage, vandalism, drought damage, wind damage, frost damage, toxic irrigation water, or any other condition that would damage or reduce the viability of the plants. Plants shall be kept moist at all times and shall be completely watered twelve (12) hours or less before planting and shall be moist when installed.

C. Layout: Only those plants to be planted in any single day shall be laid out. Locations of all plants shall be reviewed prior to planting. Plants installed without this review shall be transplanted as directed by the City's Representative.

D. Protection of Plants: Contractor shall maintain all plant material in a healthy growing condition prior to and during planting operations. Contractor shall be responsible for vandalism, theft and damage to plant material until the commencement of the maintenance period.

E. Root Systems: Contractor shall be responsible for inspection of all root systems on plant materials. Inspection shall include, but not be limited to, checking for rootbound stock, encircling roots at the perimeter of the container, evidence of girdling roots, and other defective root conditions. Such inspections shall include the complete removal of soil from one percent of plant material containers, or at least one plant from each nursery and each plant type. Contractor shall cut defective or potentially defective girdling, rootbound, and encircling roots and spread the root system into the surrounding backfill. Plants with excessively defective root systems shall be rejected by the Contractor.

F. Pruning: Contractor shall do no pruning without the specific approval of the City's Representative. Plants pruned without approval shall be replaced by the Contractor, if required.

G. Basins: Construct basins as necessary to water plants. Remove basins from all plants under a permanent irrigation system prior to final inspection and finish grade the planting area. Basins for plants to be hand-watered shall remain in place. Basin bottoms shall drain to berm away from plant stem.

H. Staking: All trees shall be staked as drawn with stakes driven securely into existing soil aligned with the trunk and perpendicular to the direction of the prevailing winds. A minimum of two figure-eight rubber tree ties required per stake.

I. Plant Pits, Backfill and Finish Grading: See Section 329113 - Landscape Soil Preparation for materials and installation requirements.

J. Cleanup: After completion of all operations, Contractor shall remove all trash, excess soil and other debris. All walks and pavement shall be swept and washed clean, leaving the entire area in a neat, orderly condition.

3.2 MEASUREMENT AND PAYMENT

A. All work under this section shall be paid for at the lump sum price bid for PLANTING and shall include full compensation for furnishing all labor, materials, tools, equipment, and incidentals, and for doing all the work involved in PLANTING, and related incidental work.

END OF SECTION

SECTION 331113 - FACILITY WATER DISTRIBUTION

PART 1 GENERAL

1.1 APPLICABLE PUBLICATIONS:

A. The publications listed below form a part of this specification to the extent referenced. The publications are referred to in the text by the basic designation only.

1. American National Standards Institute (ANSI) Publications:
   a. B16.18-1978 Cast Copper Alloy Solder-Joint Pressure Fittings
   b. B18.2.2-1972 Square and Hex Nuts
   c. B18.5-1978 Round Head Bolts (Inch Series)
2. American Society for Testing and Materials (ASTM) Publications:
   a. A47-99(2022)e1 Standard Specification for Ferritic Malleable Iron Castings
   b. A48-22 Standard Specification for Gray Iron Castings
   c. A307-21 Standard Specification for Carbon Steel Bolts, Studs, and Threaded Rod 60 000 PSI Tensile Strength
   d. B32-20 Standard Specification for Solder Metal
   e. C94-22a Standard Specification for Ready-Mixed Concrete
   f. C150-22 Standard Specification for Portland Cement
   g. D2241-20 Standard Specification for Poly(Vinyl Chloride) (PVC) Pressure-Rated Pipe (SDR Series)
   h. D2564-20 Standard Specification for Solvent Cements for Poly(Vinyl Chloride) (PVC) Plastic Piping Systems
   i. D2855-20 Standard Practice for the Two-Step (Primer and Solvent Cement) Method of Joining Poly (Vinyl Chloride) (PVC) or Chlorinated Poly (Vinyl Chloride) (CPVC) Pipe and Piping Components with Tapered Sockets
   j. D3139-19 Standard Specification for Joints for Plastic Pressure Pipes Using Flexible Elastomeric Seals
   k. F402-18 Standard Practice for Safe Handling of Solvent Cements, Primers, and Cleaners Used for Joining Thermoplastic Pipe and Fittings
   l. F477-14(2021) Standard Specification for Elastomeric Seals (Gaskets) for Joining Plastic Pipe
3. American Water Works Association (AWWA) Publications:
   a. C110-12 Gray-Iron and Ductile-Iron Fittings, 3 in. through 48 in., for Water and Other Liquids
   b. C500-19 Gate Valves, 3 in. through 48 in. NPS, for Water and Sewage Systems
   c. C502-18 Dry-Barrel Fire Hydrants
   d. C601-81 Disinfecting Water Mains
   e. C606-81 Grooved and Shouldered Type Joints
   f. C606-81 Grooved and Shouldered Type Joints
   g. C800-66 Threads for Underground Service Line Fittings
   h. C900-81 Polyvinyl Chloride (PVC) Pressure Pipe, 4 in. through 12 in., for Water
   i. C506-78 Reduced Pressure Principal Devices
4. National Fire Protection Association (NFPA) Publication:

a. NFPA 24-1981 Installation of Private Fire Service Mains and Their Appurtenances

5. Underwriter's Laboratories, Inc. (UL) Publications:
   a. UL 246-79 Hydrants for Fire-Protection Service, with revision dated January 4, 1982
   b. UL 262-80 Gate Valves for Fire Protection Service
   c. UL 789-82 Indicator Posts for Fire Protection Service, with revision dated July 27, 1982
6. Uni-Bell Plastic Pipe Association (UNI) Publication:
   a. UNI-B-3-79 Installation of Polyvinyl Chloride (PVC) Pressure Pipe Complying with AWWA Standard C-900
7. Standard Specifications for Public Works Construction ("Orange Book"); the latest edition.

1.2 GENERAL REQUIREMENTS

A. All work shall be performed in compliance with Section 307 of the Standard Specifications for Public Works Construction except as modified herein.

B. Fire Service Lines shall be indicated as polyvinyl chloride (PVC) plastic water main pipe. Provide fire hydrants and assembly, including gate valve, where indicated.

C. Manufacturer's Data: Submit manufacturer's standard drawings or catalog cuts of the following items, except where both are specified:
   1. Pipe and Fittings
   2. Valves
   3. Valve Boxes

D. Standards Compliance:
   1. Submit manufacturer's certificates of conformance or compliance for each of the following materials, which are specified to conform to publications referenced under paragraph, "Materials" in this section:
      a. Valves
      b. Fire Hydrants
   2. All tests required by the applicable referenced publication shall have been performed, whether specified in that publication to be mandatory or otherwise. For tests which are not specified in the referenced publication to be performed at definite intervals during manufacture, the tests shall have been performed within 3 years of the date of submittal of certificates on the same type, class, grade, and size of material as is being provided for the project.

E. Where the term "Architect" is used, it shall mean Engineer.

1.3 DELIVERY, STORAGE, AND HANDLING OF MATERIALS

A. Delivery and Storage: Inspect materials delivered to site for damage. Unload and store with minimum handling. Store materials on site in enclosures or under protective covering. Store plastic piping and rubber gaskets under cover out of direct sunlight. Do not store materials directly on the ground. Keep inside of pipes and fittings free of dirt and debris.

B. Handling: Handle pipe, fittings, valves, hydrants, and other accessories in such manner as to ensure delivery to the trench in sound undamaged condition. Take special care to avoid injury to coatings and linings on pipe and fittings; make satisfactory repairs if coatings or linings are damaged. Carry pipe to the trench; do not drag it. Do not leave rubber gaskets and plastic piping

that are not to be installed immediately out in the sunlight, but store under cover out of direct sunlight.

PART 2 PRODUCTS

2.1 MATERIALS

Piping Materials for Water Distribution Mains:

A. Ductile-Iron Piping
   1. Piping and Fittings: Ductile-iron pipe shall conform to AWWA C151 and shall be Thickness Class 50 minimum. Flanged pipe shall conform to AWWA C115. Fittings shall conform to AWWA C110; fittings with push-on joint ends shall conform to the same requirements as fittings with mechanical-joint ends, except that the bell design shall be modified, as approved, for push-on joint. Fittings shall have pressure rating at least equivalent to that of the pipe. Ends of pipe and fittings shall be suitable for the joints specified in the following paragraph. Pipe and fittings shall have cement-mortar lining conforming to AWWA C104, standard thickness.
   2. Joints and Jointing Material:
      a. Joints, General: Joints for pipe and fittings shall be push-on joints except as otherwise indicated. The following optional jointing methods may be employed, either in whole or in part.
      b. Mechanical-joint in lieu of push-on joint.
      c. Push-on Joints: Shape of pipe ends and fittings ends, gaskets, and lubricant for joint assembly shall conform to AWWA C111.
      d. Mechanical Joints: Dimensional and material requirements for pipe ends, glands, bolts and nuts, and gaskets shall conform to AWWA C111.
      e. Flanged Joints: Bolts, nuts, and gaskets for flanged connections shall be as recommended in the Appendix to AWWA C115.

B. Polyvinyl Chloride (PVC) Plastic Water Main Pipe and Associated Fittings:
   1. Piping and Fittings: Ductile-iron pipe shall conform to AWWA C151 and shall be Thickness Class 50 minimum. Flanged pipe shall conform to AWWA C115. Fittings shall conform to AWWA C110; fittings with push-on joint ends shall conform to the same requirements as fittings with mechanical-joint ends, except that the bell design shall be modified, as approved, for push-on joint. Fittings shall have pressure rating at least equivalent to that of the pipe. Ends of pipe and fittings shall be suitable for the joints specified in the following paragraph. Pipe and fittings shall have cement-mortar lining conforming to AWWA C104, standard thickness.
   2. Joints and Jointing Material: Joints for pipe shall be push-on joints as specified in ASTM D3139. Joints between pipe and metal fittings, valves, and other accessories shall be push-on joints as specified in ASTM D3139 or shall be compression-type joints/mechanical-joints as respectively specified in ASTM D3139 and AWWA C111. Each joint connection shall be provided with an elastomeric gasket suitable for the bell or coupling with which it is to be used. Gaskets for push-on joints for pipe shall conform to ASTM F477. Gaskets for push-on joints and compression-type joints/mechanical-joints for joint connections between pipe and metal fittings, valves, and other accessories shall be as specified in AWWA C111 respectively for push-on joints and mechanical-joints. Mechanically coupled joints using a sleeve-type mechanical coupling, as specified in paragraph,

"Sleeve-Type Mechanical Couplings," may be used as an optional jointing method in lieu of push-on joints on plain-end PVC plastic pipe, subject to the limitations specified for mechanically coupled joints using a sleeve-type mechanical coupling and to the use of internal stiffeners as specified for compression-type joints in ASTM D3139.

C. Plastic Piping: All plastic pipe and fittings shall bear the seal of approval of the National Sanitation Foundation for potable water service. Plastic pipe and fittings shall be supplied from the same source.
   1. Polyvinyl Chloride (PVC) Plastic Piping: Pipe shall conform to AWWA C900, with SDR as necessary to provide 150 psi minimum pressure rating. Fittings shall conform to AWWA c900. Pipe and fittings shall be of the same PVC plastic material and shall be one of the following pipe/fitting combinations, as marked on the pipe and fitting, respectively.

D. Insulating Joints: Joints between pipe of dissimilar metals shall have a rubber-gasketed or other suitable approved type of insulating joint or dielectric coupling which will effectively prevent metal-to-metal contact between adjacent sections of piping.

2.2 VALVES, HYDRANTS, AND OTHER WATER MAIN ACCESSORIES

A. Gate Valves on Buried Piping: Except as otherwise specified in this paragraph, valves shall conform to AWWA C500 or to UL 262. Valves conforming to AWWA C500 shall be non-rising stem type with double-disc gates having parallel or inclined seat. Valves conforming to UL 262 shall be inside-screw type with operating nut, shall have split wedge or double disc type gate, and shall be designed for a hydraulic working pressure of 150 psi. Valves shall open by counterclockwise rotation of the valve stem. Stuffing boxes shall have O-ring stem seals, except when gearing is specified in this paragraph, in which case conventional packing shall be used in place of O-ring seal. Stuffing boxes shall be bolted and constructed to permit easy removal of parts for repair. Valves shall have mechanical-joint or push-on joint ends and gaskets conforming to AWWA C111, except that valves may have special ends, as approved, for connection to asbestos-cement or concrete piping or to sleeve-type mechanical coupling. Valve ends and gaskets for connection to asbestos-cement or concrete piping or to sleeve-type mechanical coupling shall conform to the applicable requirements specified respectively for the joint or coupling. Valves shall have mechanical-joint ends only; ends and gaskets shall conform to AWWA C111. Where a post indicator is shown, the valve shall have an indicator post flange; indicator post flange for AWWA C500 valve shall conform to the applicable requirements of UL 262.

B. Fire Hydrants:
   1. Fire Hydrants, General: Hydrants shall be dry-barrel type. Fire hydrants shall conform to the City of Reno Standards, Mueller A-423.

C. Valve Boxes: Each gate valve on buried piping shall be provided with an adjustable cast-iron or precast concrete valve box of a size suitable for the valve on which it is to be used. The head shall be round and the lid shall have the word "WATER" cast on it. The least diameter of the shaft of the box shall be 5-1/4 inches. Each cast-iron box shall be given a heavy coat of bituminous paint.

D. Tracer Wire for Nonmetallic Piping: Tracer wire shall be bare copper or aluminum wire not less than 0.10 inch in diameter and shall be provided in sufficient length to be continuous over each separate run of nonmetallic pipe.

PART 3 EXECUTION

3.1 INSTALLATION OF PIPELINES

A. General Requirements: These requirements shall only apply to all pipeline installation except where specific exception is made in the "Special Requirements..." paragraphs hereunder.

B. Location of Water Lines: The work covered by this section shall terminate at a point approximately 5 feet from the building, unless otherwise indicated on the drawings. Where the location of the water line is not clearly defined by dimensions on the drawings, do not lay water line closer horizontally than 10 feet from any sewer line. Where water lines cross under gravity sewer lines, encase sewer line fully in concrete for a distance of at least 10 feet on each side of the crossing, unless sewer line is made of pressure pipe with rubber-gasketed joints and no joint is located within 3 feet horizontally of the crossing. Do not lay water lines in the same trench with gas lines, fuel lines or electric wiring.

C. Earthwork: All earthwork shall be in accordance with Section 313000, - Excavation, Backfilling and Compacting.

D. Pipe Laying and Jointing: All pipe, fittings, valves and accessories will be carefully inspected by the Architect before and after installation and those found defective will be rejected. Remove fins and burrs from pipe and fittings. Before placing in position, clean pipe, fittings, valves, and accessories and maintain in a clean condition. Provide proper facilities for lowering sections of pipe into trenches. Do not under any circumstances drop or dump pipe, fittings, valves, or any other water line material into trenches. Cut pipe accurately to measurements established at the site and work into place without springing or forcing. Replace by one of the proper dimensions any pipe or fitting that does not allow sufficient space for proper installation of jointing material. Blocking or wedging between bells and spigots will not be permitted. Lay bell-and-spigot pipe with the bell end pointing in the direction of laying. Grade the pipeline in straight lines, taking care to avoid the formation of any dips or low points. Support pipe at its proper elevation and grade, taking care to secure firm and uniform support. Wood support blocking will not be permitted. Lay pipe so that the full length of each section of pipe and each fitting will rest solidly on the pipe bedding; excavate recesses to accommodate bells, joints, and couplings. Provide anchors and supports where indicated and where necessary for fastening work into place. Make proper provision for expansion and contraction of pipelines. Keep trenches free of water until joints have been properly made. At the end of each day's work, close open ends of pipe temporarily with wood blocks or bulkheads. Do not lay pipe when conditions of trench or weather are unsuitable.

E. Installation of Tracer Wire: Install a continuous length of tracer wire for the full length of each run of nonmetallic pipe. Attach wire to top of pipe in such manner that it will not be displaced during construction operations.

F. Connections to Existing Lines: Make connections to existing water lines in an approved manner and do so with a minimum interruption of service on the existing line. Where connections to existing lines are made under pressure, make these connections in accordance with the recommendations of a manufacturer of pipe of which the line being tapped is made, except as otherwise specified in this paragraph. Tap concrete pipe in accordance with the requirements of AWWA Manual M9 for tapping concrete pressure pipe.

3.2 INSTALLATION OF VALVES AND HYDRANTS FOR WATER MAINS

A. Installation of Valves: Install gate valves in accordance with the requirements of AWWA C600 for valve-and-fitting installation. Make and assemble joints to gate valves as previously specified for making and assembling the same type joints between pipe and fittings.

B. Installation of Hydrants: Install hydrants in accordance with the requirements of AWWA C600 for hydrant installation, as indicated. Make and assemble joints as previously specified for making and assembling the same type joints between pipe and fittings.

3.3 SPECIAL REQUIREMENTS FOR INSTALLATION OF WATER SERVICE PIPING

A. Installation, General: Connect water service piping to the building service where the building service has been installed. Where building service has not been installed, terminate water service lines approximately 5 feet from the building line at a point directed by the Architect; such water service lines shall be closed with plugs or caps.

B. Metallic Piping:
   1. Metallic Piping Installation, General: Install pipe and fittings in accordance with the general requirements for installation of pipelines and with the applicable requirements of AWWA C600 for pipe installation, except as otherwise specified in the other subparagraphs hereunder.
   2. Jointing:
      a. Screwed Joints: Make screwed joints up tight with a stiff mixture of graphite and oil, inert filler and oil, or an approved graphite compound; apply to male threads only. Threads shall be full cut; do not leave more than three threads on the pipe exposed after assembling the joint.
      b. Joints for Copper Tubing: Cut copper tubing with square ends; remove fins and burrs. Handle tubing carefully; replace dented, gouged, or otherwise damaged tubing with undamaged tubing. Make solder joints using ASTM B32, alloy grade Sb5 of equivalent solder. Before making joint, clean ends of tubing and inside of fitting or coupling with wire brush or abrasive. Then apply a rosin flux to the tubing end and on recess inside of fitting or coupling. Then insert tubing end into fitting or coupling for the full depth of the recess and solder. For compression joints on flared tubing, insert tubing through the coupling nut and then flare tubing with an approved flaring tool.
      c. Flanged Joints: Make flanged joints up tight, taking care to avoid undue strain on flanges, valves, fittings, and accessories.

C. Plastic Piping:
   1. Plastic Piping Installation, General: Install pipe and fittings in accordance with the general requirements for installation of pipelines and with the applicable requirements of AWWA C900.
   2. Jointing: Make plastic pipe joints to other pipe materials in accordance with the recommendations of the plastic pipe manufacturer, as approved.
   3. Connections to Water Mains: Connect plastic pipe service lines to water mains in accordance with the recommendations of the plastic pipe manufacturer, as approved.

3.4 DISINFECTION

A. Flush and disinfect new potable water lines and affected portions of existing potable water lines in accordance with AWWA C615. Apply chlorine by the continuous feed method.

3.5 FIELD TESTS AND INSPECTIONS

A. Field Tests and Inspections, General: The Architect will conduct field inspections and witness all field tests specified in this section. The Contractor shall perform all field tests, and provide all labor, equipment, and incidentals required for testing, except that water needed for field tests will be furnished by the Owner. The Contractor shall produce evidence, when required, that any item of work has been constructed properly in accordance with the drawings and specifications. Do not begin testing on any section of a pipeline where concrete thrust blocks have been provided until at least 5 days after placing of the concrete.

B. Testing Procedure: Test water mains and water service lines in accordance with the applicable standard specified in this paragraph, except for the special testing requirements given in the following paragraph. Test ductile iron water mains and water service lines in accordance with the requirements of AWWA C600 for hydrostatic testing. The amount of leakage on ductile-iron pipelines with mechanical-joints or push-on joints shall not exceed the amounts given in AWWA C600; no leakage will be allowed at joints made by any other method. Test PVC plastic water mains and water service lines made with PVC plastic water main pipe in accordance with the requirements of UNI B-3 for pressure and leakage tests. The amount of leakage on pipelines made of PVC plastic water main pipe shall not exceed the amounts given in UNI B-3, except that at joints made with sleeve-type mechanical couplings, no leakage will be allowed.

C. Special Testing Requirements: For pressure test, use a hydrostatic pressure 50 psi greater than the maximum working pressure of the system, but not less than 200 psi. Hold this pressure for not less than 2 hours. Prior to the pressure test, fill that portion of the pipeline being tested with water for a soaking period of not less than 24 hours. For leakage test, use a hydrostatic pressure not less than the maximum working pressure of the system. Leakage test may be performed at the same time and at the same test pressure as the pressure test.

END OF SECTION

SECTION 334100 - STORM SEWER AND DRAINAGE PIPE

PART 1 GENERAL

1.1 SUMMARY:

A. This Section includes gravity-flow, non-pressure storm drainage outside the building, with the following components:
   1. Storm drain piping.
   2. Sanitary sewer piping

1.2 SUBMITTALS:

A. Product Data: For each type of product indicated (PVC pipe)
   1. Shop Drawings: Submit manufacturer's standard drawings or catalog cut sheets for manholes and catch basins. Include manhole frames and covers and catch basin frames and grates.

PART 2 PRODUCTS

2.1 PIPING MATERIALS:

A. Refer to Part 3 "Piping Applications" and the following for pipe, fitting, and joining materials:

2.2 SDR-35 PIPE:

A. SDR-35 Pipe: Type as specified in construction documents.

PART 3 EXECUTION

3.1 PIPING APPLICATIONS:

A. Pipe couplings and fittings with pressure ratings at least equal to pipe rating may be used in applications below, unless otherwise indicated.

B. Gravity-Flow, Non-pressure Storm Sewer Piping: Use the following pipe materials as called for on the drawings:
   1. SDR-35 Pipe (as specified on construction documents)

3.2 PIPING INSTALLATION:

A. General Locations and Arrangements: Drawing plans and details indicate general location and arrangement of underground storm drainage piping. Location and arrangement of piping layout take design considerations into account. Install piping as indicated, to extent practical. Where specific installation is not indicated, follow piping manufacturer's written instructions.

B. Install piping beginning at low point, true to grades and alignment indicated with unbroken continuity of invert. Place bell ends of piping facing upstream. Install gaskets, seals, sleeves, and couplings according to manufacturer's written instructions for using lubricants, cements, and other installation requirements.
   1. Install manholes for changes in direction unless fittings are indicated. Use fittings for branch connections unless direct tap into existing storm sewer is indicated.

2. Install proper size increasers, reducers, and couplings where different sizes or materials of pipes and fittings are connected. Reducing size of piping in direction of flow is prohibited.
3. Install gravity-flow, nonpressure drainage piping according to the following:
   a. Install piping pitched down in direction of flow, at slopes indicated on the plans.
4. Clear interior of piping and manholes of dirt and superfluous material as work progresses.

3.3 PIPE JOINT CONSTRUCTION:

A. Join gravity-flow, nonpressure storm sewer piping according to the following: Join SDR-35 materials with appropriate couplings and fittings.

END OF SECTION

APPENDIX A - FOODSERVICE CUT SHEETS

END OF SECTION

City of Fernley Community Response and Resource Center

FOODSERVICE DESIGN & CONSULTING

A Division of WEBB FOODSERVICE DESIGN

Table of Contents

AIR COOLED ROOF MTD. REFRIGERATION RACK - COLDZONE MPL-2 (ITEM 1) 1

FLOOR MTD. MOP SINK W/FAUCET - PROVIDED BY THE PLUMBING CONTRACTOR - IMC/TEDDY FS-L (ITEM 2) 4

WALL MTD. MOP HOLDER - IMC/TEDDY MH3 (ITEM 4) 9

42" WALL MTD. AIR CURTAIN - BERNER SHD07-1042A (ITEM 6) 11

CURB MTD. EMPLOYEE LOCKERS - PENCO LOCKERS 6231R (ITEM 7) 14

500 LB ICE MAKER W/ BIN - REMOTE - MANITOWOC IDF0500N (ITEM 8) 20

REMOTE CONDENSER UNIT- FOR ITEM #8 - MANITOWOC JCF0500-161 (ITEM 9) 28

WATER FILTRATION SYSTEM FOR ICE MACHINES - MANITOWOC AR-10000-P (ITEM 10) 30

MOBILE 5-TIER DRY STORAGE SHELVING - METRO NC (ITEM 14) 32

WALK IN FREEZER W/ TRIM - THERMALRITE REFRIGERATION WIF (ITEM 15) 34

EVAP. COIL/REFRIGERATION SYSTEM - PART OF REFRIGERATION RACK - COLDZONE CL6A117ADARE (ITEM 16) 49

MOBILE STORAGE SHELVING UNIT (4-TIER) - METRO NK3 (ITEM 17) 60

WALK IN COOLER W/ TRIM - THERMALRITE REFRIGERATION WIC (ITEM 20) 62

EVAP. COIL- REFRIGERATION SYSTEM-PART OF REFRIGERATION RACK - COLDZONE CL6E105DDARE (ITEM 21) 77

MOBILE STORAGE SHELVING UNIT (4-TIER) - METRO NK3 (ITEM 22) 88

4-TIER MOBILE DRYING RACK W/ DRIP TRAY - METRO PR48VX3-XDR (ITEM 24) 90

TWIST WASTE W/OVERFLOW - T&S BRASS B-3952-01 (ITEM 28) 94

SPLASH-MTD FAUCETS - T&S BRASS B-0290-04 (ITEM 29) 96

DISHWASHER, UNDERCOUNTER - CHAMPION UL-130 (ITEM 30) 98

DISPOSER W/ 18" CONE & MANUAL SWITCH - INSINKERATOR SS-200-18A-MS (ITEM 31) 100

HOSE REEL W/ WALL MTD. CONTROL CABINET, DUAL CHECK VALVES & VACUUM BREAKER - T&S BRASS B-2339-7122C01J (ITEM 32) 105

HAND SINK W/FAUCET, SOAP & TOWEL DISPENSERS & SIDE SPLASHES - ADVANCE TABCO 7-PS-80 (ITEM 33) 108

2-SECTION ROLL-IN REFRIGERATOR - TRAULSEN RRI232LUT-FHS (ITEM 35) 112

UNIVERSAL PAN RACK - FWE / FOOD WARMING EQUIPMENT CO., INC. OTR-UA-12 (ITEM 36) 114

MOBILE HEATED WARMING CABINET - CRES COR H137UA12D (ITEM 37) 116

MOBILE HEATED CABINET - CRES COR H1381834D (ITEM 38) 120

TYPE I EXHAUST HOOD - SPRING AIR SYSTEMS FN-B-MB-15/5 (ITEM 39) 124

FIRE SUPPRESSION SYSTEM (PIPING SYSTEM) - ANSUL FIRE PROTECTION R-102 ASEF-3T (ITEM 42) 126

MOBILE DOUBLE CONVECTION OVEN - BLODGETT DFG-100 DBL (ITEM 46) 130

24" 4 OPEN BURNER RANGE - VULCAN V4B24 (ITEM 47) 132

24" THERMOSTATIC GRIDDLE - VULCAN VGT24 (ITEM 48) 134

MOBILE 72" REFRIGERATED BASE - VULCAN VSC72 (ITEM 49) 136

24" CHARBROILER - VULCAN VCBB24 (ITEM 50) 140

FULL SIZE COMBI OVEN WITH RACKS AND WATER FILTER - RATIONAL ICP 20-FULL NG 208/240V 1 PH (LM100GG) (ITEM 51) 142

ACCESSIBLE HAND SINK W/ SOAP & TOWEL DISPENSER - JOHN BOOS PBHS-ADA-P-STD (ITEM 52) 162
TWIST WASTE W/ OVERFLOW - T&S BRASS B-3952-01 (ITEM 58) 166
12" SPLASH MOUNT FAUCET W/ WRIST HANDLES - T&S BRASS B-0231 (ITEM 59) 168
TRASH CANS W/DOLLY & LID - RUBBERMAID COMMERCIAL PRODUCTS FG262000GRAY (ITEM 60) 174
2-SECTION ROLL-THRU HEATED CABINET - TRAULSEN RIH232LP-FHS (ITEM 63) 178
UNIVERSAL PAN RACK - FWE / FOOD WARMING EQUIPMENT CO., INC. OTR-UA-12 (ITEM 64) 180
MICROWAVE OVEN - PANASONIC NE-1064F (ITEM 66) 182
TABLE MTD. CAN OPENER - EDLUND S-11L (ITEM 67) 183
1-SECTION ROLL-THRU REFRIGERATOR - TRAULSEN RRI132LPUT-FHS (ITEM 69) 188
UNIVERSAL PAN RACK - FWE / FOOD WARMING EQUIPMENT CO., INC. OTR-UA-12 (ITEM 70) 190
MOBILE HEATED CABINET - CRES COR H1381834D (ITEM 71) 192
HAND SINK W/FAUCET, SOAP & TOWEL DISPENSERS & SIDE SPLASHES - ADVANCE TABCO 7-PS-80 (ITEM 73) 196
TWIST WASTE W/ OVERFLOW - T&S BRASS B-3952-01 (ITEM 77) 200
12" SPLASH MOUNT FAUCET W/ WRIST HANDLES - T&S BRASS B-0231 (ITEM 78) 202
MOBILE ACCESSIBLE CASH REGISTER STAND - G.A. SYSTEMS INC. D3136A (ITEM 81) 208
MOBILE DUAL ACCESS MILK COOLER - BEVERAGE AIR STF58HC-1-S (ITEM 84) 211
STUDENT'S HOT/ COLD SERVING COUNTER - DUKE MANUFACTURING TST-74SS (ITEM 85) 213
4-PAN HOT / COLD FOOD WELL UNIT, DROP-IN UNIT-PART OF ITEM #85 - DUKE MANUFACTURING HCF-4 (ITEM 86) 215
ADJUSTABLE SNEEZE GUARD W/ S/S PASS SHELF & END GLASS - ENGLISH MANUFACTURING AMA-101A/101-3 (ITEM 87) 217
SERVING COUNTER W/ ACCESSIBLE STATION - DUKE MANUFACTURING TST-74SS (ITEM 88) 218
ADJUSTABLE SNEEZE GUARD W/ S/S PASS SHELF & END GLASS - ENGLISH MANUFACTURING AMA-101A/101-3 (ITEM 89) 220
STUDENT'S HOT/ COLD SERVING COUNTER - DUKE MANUFACTURING TST-74SS (ITEM 90) 221
4-PAN HOT / COLD FOOD WELL UNIT, DROP-IN UNIT-PART OF ITEM #90 - DUKE MANUFACTURING HCF-4 (ITEM 91) 223
ADJUSTABLE SNEEZE GUARD W/ S/S PASS SHELF & END GLASS - ENGLISH MANUFACTURING AMA-101A/101-3 (ITEM 92) 225
MOBILE TRAY DISPENSER - CADDY CM-1814-2C (ITEM 93) 226
MOBILE INSULATED TRANSPORT CABINETS - CRES COR 1091840 (ITEM 110) 227
MOBILE U/C REGRIGERATOR W/ 3" CASTERS - BEVERAGE AIR WTR27HC-FLT (ITEM 112) 233
DROP-IN 2-CPT SINK - ADVANCE TABCO DI-2-10 (ITEM 114) 235
DISHWASHER, UNDERCOUNTER - CHAMPION UL-130 (ITEM 115) 237
ACCESSIBLE HAND SINK W/ SOAP & TOWEL DISPENSER - JOHN BOOS PBHS-ADA-P-STD (ITEM 116) 239

ColdZone



Model MPL-2CZ

Air Cooled Refrigeration Systems

ITEM #_____

MINI-PAK REFRIGERATION SYSTEM

The packaged refrigeration system is to be U.L. Listed and will be located on a pad outside of the building. This unit includes the outdoor weather housing, compressor and condenser systems and electrical control panel, all housed within a single assembly. The evaporator coil assemblies will be supplied with all the required options and accessories. All of the component parts, options and accessories will be provided, mounted, piped and wired, as required by the manufacturer. The system shall be manufactured to operate at: _____ volts, _____ phase, _____hertz.

FRAME AND HOUSING

The outdoor weather shall include a welded, de-burred and cleaned structural steel base frame made of 12 gauge. The exterior housing and access doors will be manufactured of a minimum of 16 gauge galvanized steel which has been assembled and cleaned. The frame and housing shall be painted with a primer coat of epoxy based paint and finished with a coat of polyurethane acrylic enamel.

COMPRESSOR AND CONDENSER SYSTEMS

All compressors will be Copelaweld, Copelametic, Scroll or Discus. All compressors will be manufactured to operate with R-404A, R-448A, R-449A, or R-407A refrigerant. Each Compressor system shall be filled with refrigerant compatible refrigeration oil by the manufacturer and will include discharge and suction line vibration protection (vibrasorbers Copelametic and Discus compressors), dual pressure control with hoses, liquid line filter-dryer, moisture indicating sight glass, and crankcase heater. Each of these systems shall also include a receiver tank capable of accepting all of the system refrigerant without exceeding 90% of its volumetric capacity. Each receiver will be provided with a fusible plug or pressure relief vent and, at its outlet, an isolation valve with a service port. Additionally, all compressor systems that will operate at suction temperatures below 0°F shall include a suction line accumulator.

The condenser system shall include the Multi-Circuited condenser, 1/3 horse power condenser fan motor with 20 inch fan blade mounted in a venturi contoured air-scoop protected by plastic coated fan guard, and flooded headpressure controls. The compressors and condenser circuits shall be sized to operate at an average temperature differential between the ambient and condensing temperatures of 20°F.

CONTROL PANEL

The interior mounted, weather proof, electrical control panel will be manufactured of 16 gauge galvanized steel which has been assembled, welded, de-burred and cleaned. The control panel shall be protected by an exterior mounted NEMA 3R rated fused disconnect switch and will include a removable cover, circuit breakers and contactors for each compressor, required defrost time clocks; and circuit breakers, start capacitors, and fan cycle control thermostats for each of the condenser fan motors. A wiring diagram of the refrigeration system shall be provided and mounted inside of the refrigerated system. All internal wiring shall be held in place with fasteners and individually numbered. The wire numbers shall be shown on the wiring diagram.

EVAPORATOR COILS

The evaporator assemblies, and the parts associated with them, will be mounted inside of the walk-ins. Each evaporator coil shall include a matching thermostatic expansion valve, liquid line solenoid valve and thermostat. In cases where two (2) or more evaporator coils are to be piped to a single compressor the thermostat and liquid line solenoid valve will be shipped loose to be mounted and wired at the job site.

INTERNAL REFRIGERATION PIPING

All of the internal refrigeration piping shall be extended to one side of the refrigeration system in a neat and orderly manner. Each set of piping shall have a label permanently affixed identifying the system it will service. All internal refrigeration piping shall be refrigerant grade A.C.R. or type L copper tubing. All tubing shall be held in place with Uni-Strut channels and clamps and protected with neoprene grommets. A minimum of 1/2 inch thick insulation shall cover all suction lines.

After circuiting the condenser shall be tested for leaks at a minimum pressure of 450 pounds per square inch/gauge (psig). After final assembly the entire system shall be tested for leaks at 250 psig and evacuated pressure test at 500 microns at the factory. The refrigeration system shall be shipped with a 55 psig charge of dry nitrogren.

ColdZone

Model MPL-2CZ

Air Cooled Refrigeration Systems



DIMENSIONAL DATA

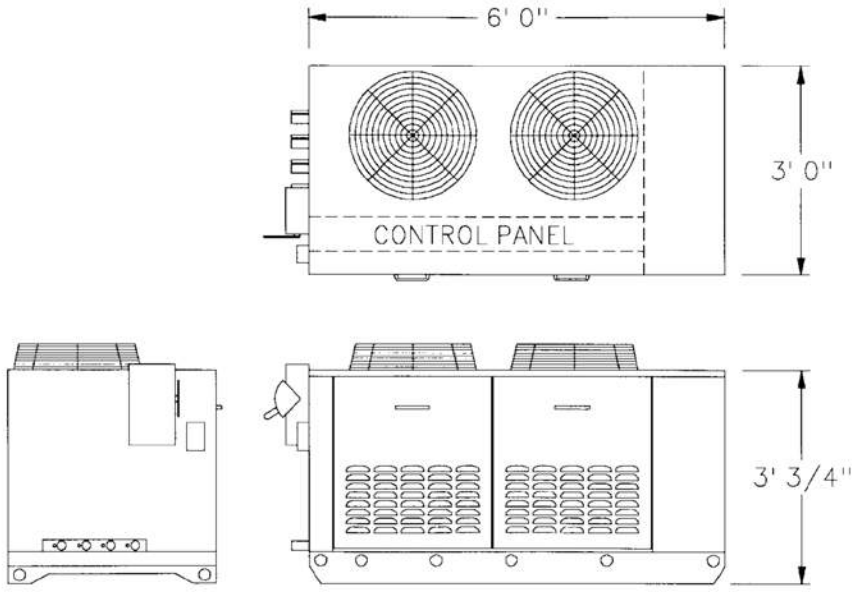

PHYSICAL DATA

Maximum Total HP*	Maximum Number of Comp. (Spaces)**	Number of Fans	Typical Overall Dimensions (In.)			Approx. Weight (lbs.)
			Length	Width	Height	
7.0	4 - Semi-Hermetic 5 - Hermetic 5 - Scroll	2	72	36	36 3/4"	750-1100

* Total compressor HP will be determined by comp(s). used. ** 1/2 - 3 HP = 1 comp. space, 5 HP = 2 comp. spaces.

COMPRESSOR DATA

System	Item	Fixture Description	Freon	Compressor	Voltage	Evaporator(s)	Voltage

Note: Compressors are designed with matching evaporator coil. Consult factory for specific electric data.
Specification subject to change without prior notice.

ColdZone

PHONE (800) 772-2653 • coldzone.htpg.com

EcoNet® Enabled Unit Coolers



Efficient & Intelligent Control

EcoNet® Enabled Unit Coolers are electronically controlled evaporators designed for energy efficiency and easier installation. Developed in conjunction with Rheem Manufacturing specifically for commercial refrigeration applications, it builds on the success, reliability and efficiency of Rheem's EcoNet technology.

- Saves energy by reducing fan speed to 50% during off cycle
- Maximizes energy efficiency with less compressor runtime
- Eliminates icing issues and unnecessary defrosts
- Improves product quality by reducing temperature fluctuations
- Can be used with a condensing unit with single and multiple evaporators as a group
- Available factory-installed on Next-Gen All-Temp Low Profile, Center Mount, Low Velocity Center Mount, Medium Profile, Heavy Duty, and Warehouse Unit Coolers for quick shipment directly from finished goods warehouses

Optional EcoNet Command Center

- Intuitive graphical touchscreen interface controls up to 32 devices (including the Command Center) through one display
- Provides continuous communication between system components
- Remote mount display allows for EcoNet Enabled Unit Coolers to be programmed, monitored, and troubleshot outside of the space being cooled

Contact your local ColdZone Sales Representative for more information

Smart temperature control for walk-in coolers & freezers

IMC/TEDDY
DECADES OF FINE CRAFTSMANSHIP

FS-L
Left Corner Floor Sink/Utility Sink

General Information

Project Name: _____

Consultant: _____

Item #: _____

Model #: _____

Quantity: _____



Specifications

FS-L Model is a standard duty "left corner" utility sink with a 18" x 24" x 7" deep bowl & angled corner.

Utility Sinks are constructed of 16GA type 300 series stainless steel, with integrated full-height apron and built in pitch to 4" OD waste outlet with strainer.

Product Guide

IMC Utility Sinks are easily cleanable without the use of tools. All corners are coved, and all seams are fully welded and polished.

Rugged type 304, 18-8 stainless steel construction, engineered to stand up under day-in and day-out abuse.

Options

- **SSF** - Wall Faucet
- **HA** - 36" Hose
- **MH3** - Mop Holder (3)
- **MH4** - Mop Holder (4)
- **MH5** - Mop Holder (5)
- **LH6** - 6" High Legs
- **IPS2** - 2" IPS Drain
- **BW-36** - Custom Bowl up to 36" x 36"
- **FL48** - 48" High Flashing at Rear or Side
- **FL48-W** - Welded 48" High Flashing on 3 Sides
- **RSS8** - Rear & Side Splash 8" High
- **USH24** - 24" Utility Shelf
- **USH36** - 36" Utility Shelf
- **MSR** - Lint Bucket (Mesh Strainer)
- **FF-50** - S/S Flanged Feet (Each)
- **SEC** - Correctional Package

PROUDLY MADE IN THE USA

NSF

FS-L-20 0919

IMC/TEDDY
DECADES OF FINE CRAFTSMANSHIP

FS-L
Left Corner Floor Sink / Utility Sink

DRAWINGS

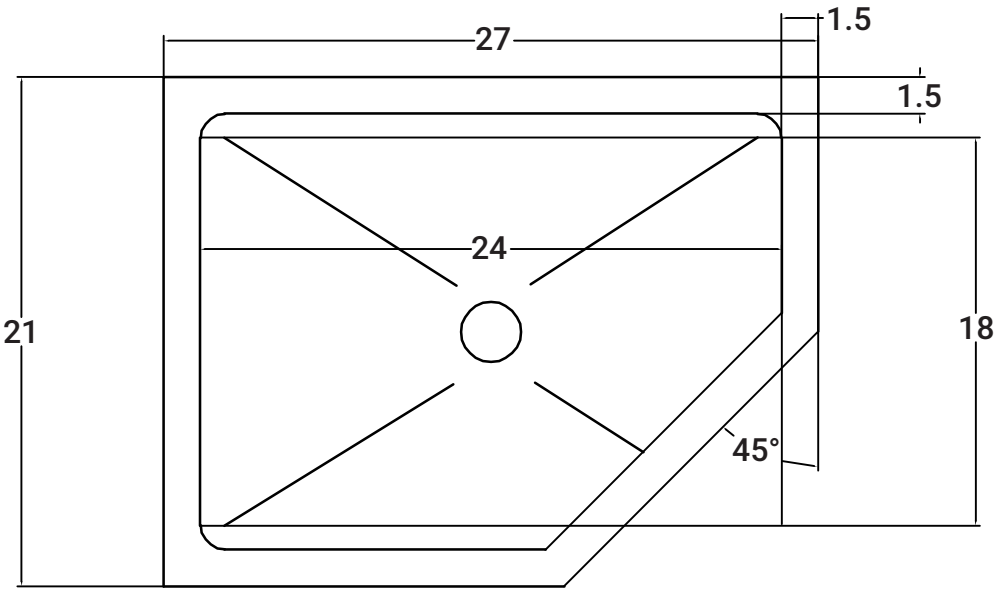

PLAN

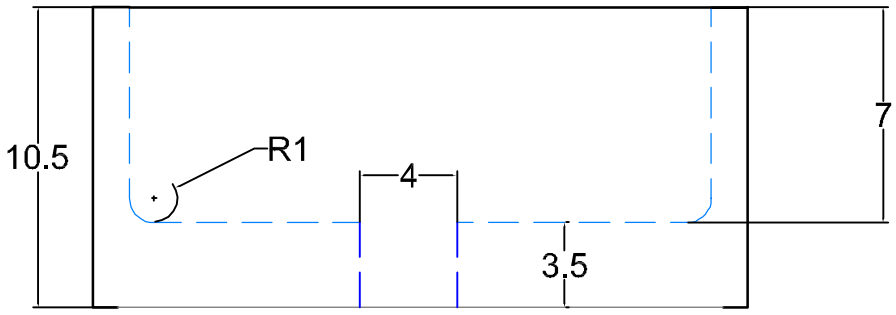

FRONT ELEVATION

LEFT CORNER FLOOR SINK

Model	Bowl Size (W x L x H)	Overall Size (W x L x H)
☐ FS-L	24" x 18" x 7"	21" x 27" x 10½"

Specifications subject to change without notice.

FS-L-20 0919

Project_____Consultant_____Model Number_____Item Number_____

Accessories



LFRG
Lavatory Faucet, 5 1/2" spread rigid gooseneck, 8" centers, rosespray outlet, 4 5/16" clearance deck to face of spray, 4" wrist action handles

Service Sinks & Prep Tables



KPSF
Kettle & Pot Sink Faucet, Big-Flo, wall mounted 8" centers, 3/4" IPS model LL street EL inlets with locknuts, 12" swing nozzle, 175F four arm handles, 1 1/4" diameter holes required in backsplash

Service Sinks & Prep Tables



SSF
Service Sink Faucet, 8" centers-adjustable from 7 3/4" to 8 1/4", 5 1/8" clearance wall to center line of faucet, 11 5/8" from wall to center of outlet, polished chrome plated finish, with built in screwdriver stops

Service Sinks & Mop Sinks



SCMV-SEC
Slow Self Closing Mixing Faucet, 1/2" IPS threaded shank w/1/4" IPS tailpieces on 4" centers, 5 1/2" high, 1/2" OD slip inlet aerator outlet, vandal resistant option

Correctional Type



PRF
Pre-Rinse Unit, mounted behind splash faucet 4" centers, 1/2" IPS female inlets, 33"high, 15"overhang, 4" from bottom of spray valve to center of faucet, 18" riser model, spray valve & flexible stainless steel hose



PRF-FPV
Pre-Rinse with Foot Pedal Valve Control, 1 1/4" long shank on base faucet, 1/2" end w/1/4" IPS tailpiece, 38" high, 15" overhang, 7 1/2" clearance, 24" riser model, spray valve, & flexible stainless steel hose

IMC/TEDDY FOOD SERVICE EQUIPMENT
P.O. Box 206
Copiague, NY 11726-0206
800-221-5644/631-789-8881
Fax: 631-789-3633
www.imcteddy.com

ACC-10 0103

Project_____Consultant_____Model Number_____Item Number_____

Accessories



WF-GS
Workboard Faucet, backsplash mounted, 6 1/2" long x 2" wide chrome plated escutcheon, 4" centers, 1 1/2" long shanks, 1/2" IPS thread, w/ 133x swivel gooseneck

WS Hand Sink Faucet



WFH-SN
Workboard Faucet & Flexible Stainless Steel Hose w/Hose Spray 48" long, deck mounted, removable seats, 10 1/2" long x 2" wide chrome plated escutcheon, 8" inlet centers, 1" long shanks, 1/2" IPS threads, 8" swing nozzle, spray valve

DL Can Washer Faucet/Spray



WRA
Wrist Action Handle, chrome plated zinc handle, 4" long



WRA-4C
Wrist Action Handle 4" long, chrome plated brass handle, includes color coded snap-in index



FPV
Double Pedal Valve, Floor Mounted paired with Sink Mounted Spout



KNV-S
Knee Action Valve w/Wall Support Bracket, heavy duty cam acting stirrup, valve will remain in set position for hot, cold or mixed water, 1/2" IPS female inlets, 2 1/2" centers, 1/2" IPS female outlet combined with Sink Mounted Spout



LH-BR
Lever Handle, chrome plated zinc handle, blue index button & screw for cold, red index button & screw for hot

IMC/TEDDY FOOD SERVICE EQUIPMENT
P.O. Box 206
Copiague, NY 11726-0206
800-221-5644/631-789-8881
Fax: 631-789-3633
www.imcteddy.com

ACC-10 0103

Project_____Consultant_____Model Number_____Item Number_____

Accessories



KNV
Double Knee Pedal Valve, inlets on 2 1/2" centers, approximately 24" floor to base of valve, pedals 6 1/4" long combined with Sink Mounted Spout



LDB
Twist Waste Valve, 3 1/2" sink opening, 2" drain outlet, cast bronze, s/s strainer, nickel-plated wearing parts



LDO
Twist Waste Valve, 3 1/2" sink opening, 2" drain outlet with overflow assembly, cast bronze, s/s strainer, nickel plated wearing parts



EFD
ADA Compliant deck or splash mounted Electronic Faucet with motion detection operation. Supplied with plug-in transformer (AC) or AA batteries good for two years operation



MH3
Stainless Steel Mop Hanger, 3 spring loaded rubber grips, 24" long x 3 3/4"wide



WSDI-1012
Water Station, Drop-In, 10 1/2" x 12 1/2" drip pan in one piece 18GA stainless steel, push back glass filler with 8" clearance from tip to pan, 2 1/4" diameter sweat tailpiece for copper tube connection, 2 1/4" diameter grid drain, drain 1 1/4" x 4" long w/17GA tailpiece



SD
Soap Dispenser, s/s, 20 fl. oz. (0.6L) Capacity, 4" (100mm) Spout Length, 1" (25mm) Maximum Mounting Thickness

IMC/TEDDY FOOD SERVICE EQUIPMENT
P.O. Box 206
Copiague, NY 11726-0206
800-221-5644/631-789-8881
Fax: 631-789-3633
www.imcteddy.com

ACC-10 0103

IMC/TEDDY
DECADES OF FINE CRAFTSMANSHIP

MH
Mop Holders

General Information

Project Name: _____

Consultant: _____

Item #: _____

Model #: _____

Quantity: _____



MH3



MH4



MH5

Specifications

MH Model Mop Holder is constructed of 18GA type 300 stainless steel. Unit includes mounting flanges & closed ends for black rubber tension grip holder with chrome plated steel base.

MH3 Model is 20" long x 4" high x $1^{3}/_{4}$" deep & features (3) grip holders.

MH4 Model is $26^{3}/_{4}$" long x 4" high x $1^{3}/_{4}$" deep & features (4) grip holders.

MH5 Model is 33½" long x 4" high x $1^{3}/_{4}$" deep & features (5) grip holders.

Product Guide

IMC Mop Holders are simply the best way to hold your mops. Mount over an IMC Utility Sink or any other desirable space. Spring-activated rubber grips grasp mops securely, making storing & removing easy.

Neatly arrange your mops to maximize & keep your space tidy, an essential item for any commercial facility.

MOP HOLDER

Model	Size (L x H x D)
☐ MH3	20" x 4" x $1^{3}/_{4}$"
☐ MH4	$26^{3}/_{4}$" x 4" x $1^{3}/_{4}$"
☐ MH5	33½" x 4" x $1^{3}/_{4}$"

PROUDLY MADE IN THE USA

MH-30 0920

IMC/TEDDY
DECADES OF FINE CRAFTSMANSHIP

MH
Mop Holders

DRAWINGS

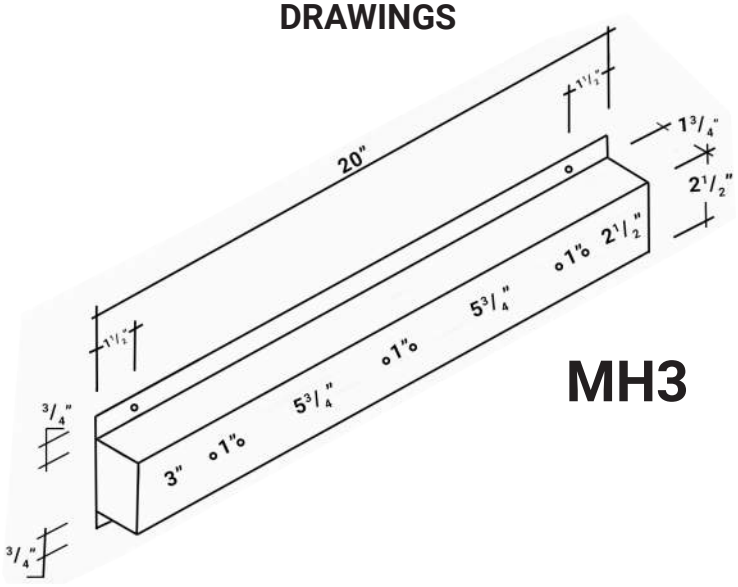

MH3

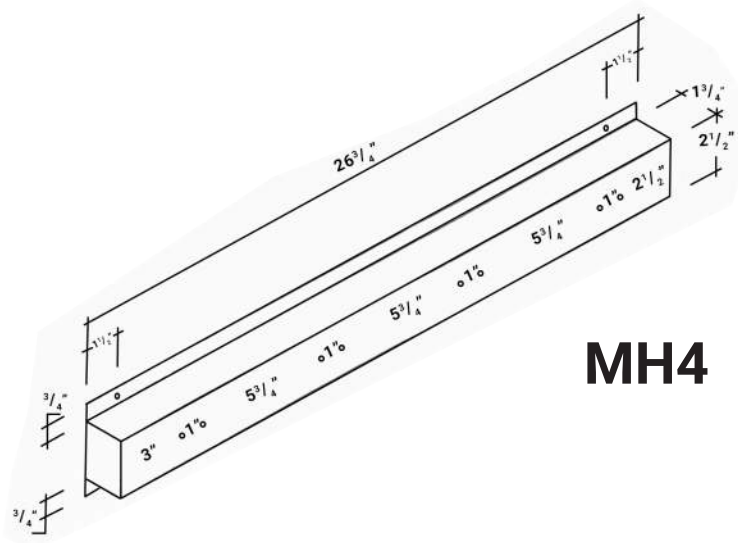

MH4

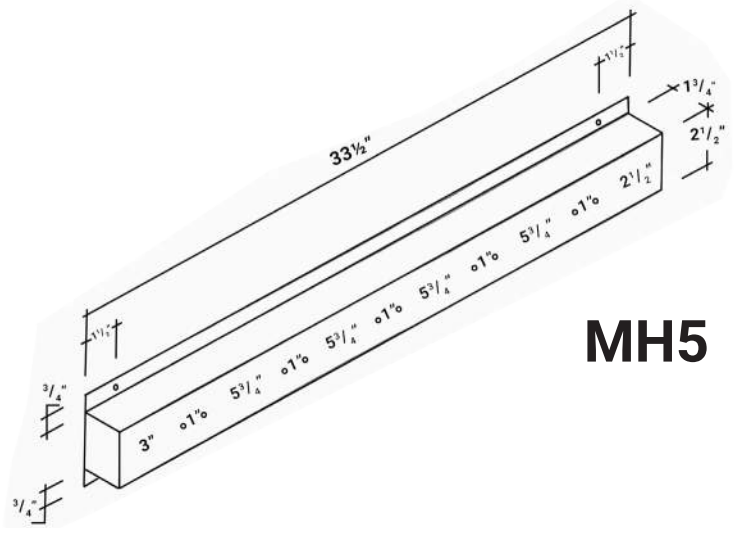

MH5

Specifications subject to change without notice.

MH-30 0920

SANITATION CERTIFIED HIGH PERFORMANCE 7
Ambient (Unheated) Air Curtain
Data Sheet

For Mounting Heights To 7' (insect control)

STANDARD CONSTRUCTION

- EPH Listed per NSF 37
- 14" high x 15" deep
- 3/4 hp single speed motor(s)
- White or black aluminum exterior cover (Optional: Custom Color or Stainless)
- Wall & Top Mounting

Berner International Corporation certifies that the air curtains shown herein are licensed to bear the AMCA Seal. The ratings shown are based on tests and procedures performed in accordance with AMCA Publication 211 and comply with the requirements of the AMCA Certified Ratings Program. Rated data shown is for base (unheated) units. The AMCA Certified Ratings Seal applies to airflow rate, average outlet velocity, outlet velocity uniformity, velocity projection and power rating at free delivery only.

5 Year Limited Warranty

Made in USA

for outdoor use

Air Curtain Fans for ANSI/NSF37 Customer Entry maximum mounting height is 7'

MODEL	Nozzle Width (in)	Max Vel. at Nozzle (fpm)	Avg. Outlet Vel. (fpm)	Air Volume (cfm)	Outlet Vel. Uniformity	Power Rating (kW)	Motor(s) @ hp	Net Wt. (lbs)
SHD07-1036A	36.00	5,917	2,110	1,846	73%	0.77	1 @ 3/4	50
SHD07-1042A	42.00	4,418	1,716	1,752	79%	0.75	1 @ 3/4	52
SHD07-1048A	48.00	3,815	1,613	1,882	38%	0.73	1 @ 3/4	53
SHD07-2060A	60.00	3,963	1,869	2,726	74%	1.18	2 @ 3/4	70
SHD07-2072A	72.00	5,917	2,110	3,692	73%	1.54	2 @ 3/4	100
SHD07-2084A	87.00	4,418	1,657	3,504	79%	1.50	2 @ 3/4	104
SHD07-2096A	99.00	3,815	1,564	3,764	38%	1.46	2 @ 3/4	106
SHD07-3108A	114.00	5,917	1,999	5,538	73%	2.31	3 @ 3/4	150
SHD07-3120A	116.50	4,418	1,923	5,444	73%	2.29	3 @ 3/4	152

NOTE: Operation at 50 Hz will generate approximately a 17% reduction in air performance.
See sheet EP-310 for amp draws/total load requirements.

MODEL NUMBER CONFIGURATION

SHD07-1 036 A A-B-SS

Series	# of Motors	Opening Width	Heat	Voltage	Opt. Switch	Cabinet Finish
SHD07	1, 2, 3	036" - 120"	A=Ambient	*A=120/1/60 B=208/1/60 J=240/1/60 V=220/1/50 Z=480/3/60 Q=600/3/60	Built-In Switch	White *(leave blank)* BK=Black **Opt. Cabinet Finish** SS=Stainless Steel CC=Custom Color

*Suitable for 50hz

for Standard offering, leave options (Opt.) blank
make sure to specify Cabinet Finish if other than white

VELOCITY PROJECTION: *Model SHD07-1036A*			
Distance from Nozzle (in)	40	60	80
Core Velocity (fpm)	3820	2750	2190
Uniformity (%)	82	76	93

Sound level measured 10' (3m) from the unit in free field:
1 & 2 motor(s): 66 dBA & 69 dBA
Sound data is not AMCA certified.

Berner reserves the right to alter specifications without prior notice.

www.berner.com Berner International 800.245.4455
111 Progress Ave. / New Castle / PA / 16101 / USA

DS-310D
October, 2017

©Copyright 2017 Berner International

SANITATION CERTIFIED HIGH PERFORMANCE 7

Ambient (Unheated) Air Curtain Electrical Performance Sheet

MODEL	120/1/60 (voltage code A) MOTOR AMP DRAW = 7.5 each		208/1/60 (voltage code B) MOTOR AMP DRAW = 3.8 each		240/1/60 (voltage code J) or 220/1/50 (voltage code V) MOTOR AMP DRAW = 3.8 each	
	# CKTS	AMPS PER CIRCUIT / BREAKER RATING PER CIRCUIT	# CKTS	AMPS PER CIRCUIT / BREAKER RATING PER CIRCUIT	# CKTS	AMPS PER CIRCUIT / BREAKER RATING PER CIRCUIT
SHD07-1036A SHD07-1042A SHD07-1048A	1	7.5 / 15	1	3.8 / 15	1	3.8 / 15
SHD07-2060A SHD07-2072A SHD07-2084A SHD07-2096A	1	15.0 / 20	1	7.6 / 15	1	7.6 / 15
SHD07-3108A SHD07-3120A	1	22.5 / 25	1	11.4 / 15	1	11.4 / 15

MODEL	480/3/60 (voltage code Z) MOTOR AMP DRAW = 1.8 each		600/3/60 (voltage code Q) MOTOR AMP DRAW = 1.5 each	
	# CKTS	AMPS PER CIRCUIT / BREAKER RATING PER CIRCUIT	# CKTS	AMPS PER CIRCUIT / BREAKER RATING PER CIRCUIT
SHD07-1036A SHD07-1042A SHD07-1048A	1	1.8 / 15	1	1.5 / 15
SHD07-2060A SHD07-2072A SHD07-2084A SHD07-2096A	1	3.6 / 15	1	3.0 / 15
SHD07-3108A SHD07-3120A	1	5.4 / 15	1	4.5 / 15

Berner reserves the right to alter specifications without prior notice.

www.berner.com Berner International 800.245-4455
111 Progress Ave. / New Castle / PA / 16101 / USA

EP-310
October, 2017

©Copyright, 2017 Berner International

SHD07
AMBIENT SYSTEM

TOP VIEW

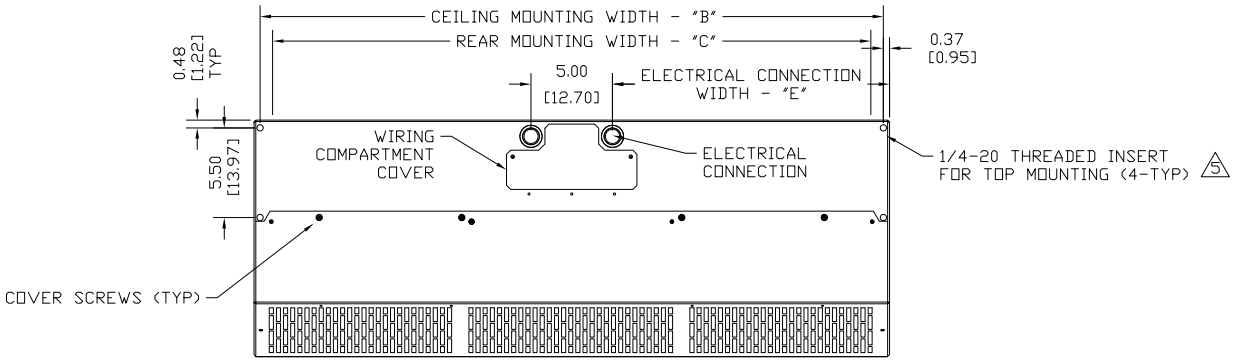

FRONT VIEW

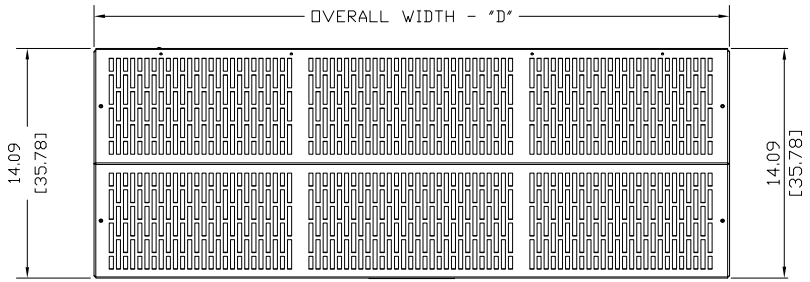

END VIEW

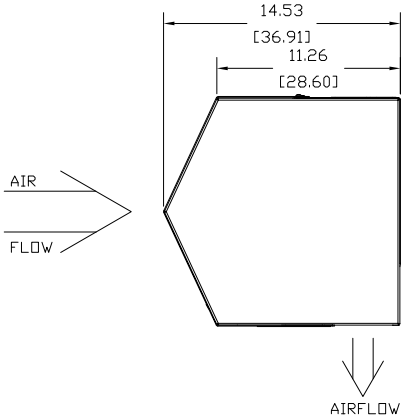

REAR VIEW

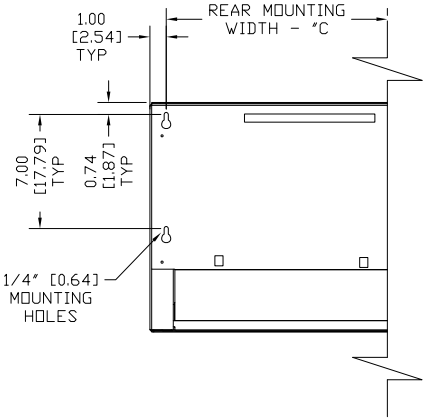

BOTTOM VIEW

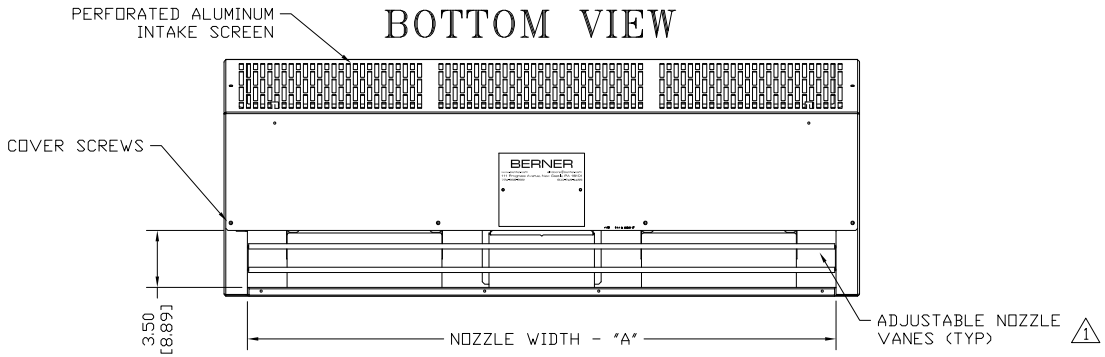

NOTES:

1. AIR CURTAIN MUST BE INSTALLED SO AIR STREAM IS NOT OBSTRUCTED WHEN DEFLECTED 20° TO EITHER SIDE OF ℄.
2. ELECTRICAL CONNECTIONS TO BE FLEXIBLE.
3. FIELD VERIFY DIMENSIONS.
4. ANCHORS TO SUPPORTING STRUCTURE BY OTHERS.
5. ADEQUACY OF SUPPORTING STRUCTURE IS TO BE VERIFIED BY A PROFESSIONAL STRUCTURAL ENGINEER.
6. LETTER "A" IN MODEL NUMBER DESIGNATES AMBIENT UNIT.
7. DIMENSIONS IN INCHES [CENTIMETERS].

MODEL 6	NOZZLE WIDTH "A"	CEILING MOUNTING WIDTH "B"	REAR MOUNTING WIDTH "C"	UNIT WIDTH "D"	ELECTRIC WIDTH "E"
SHD07-1036A	36.00 [91.44]	38.25 [97.16]	37.00 [93.98]	39.00 [99.06]	17.00 [43.18]
SHD07-1042A	42.00 [106.68]	44.25 [112.40]	43.00 [109.22]	45.00 [114.30]	20.00 [50.80]
SHD07-1048A	48.00 [121.92]	50.25 [127.64]	49.00 [124.46]	51.00 [129.54]	23.00 [58.42]
SHD07-2060A	60.00 [152.40]	62.25 [158.12]	61.00 [154.94]	63.00 [160.02]	19.00 [48.26]
SHD07-2072A	72.00 [182.88]	74.25 [188.60]	73.00 [185.42]	75.00 [190.50]	17.00 [43.18]
SHD07-2084A	86.88 [220.66]	89.13 [226.38]	87.88 [223.22]	89.88 [228.28]	20.75 [52.71]
SHD07-2096A	98.88 [251.14]	101.13 [257.18]	99.88 [253.70]	101.88 [258.76]	23.75 [60.33]
SHD07-3108A	110.88 [281.62]	113.13 [287.38]	111.88 [284.18]	113.88 [289.24]	17.50 [44.45]
SHD07-3120A	116.25 [295.28]	118.50 [300.99]	117.25 [297.82]	119.25 [302.90]	18.38 [46.67]

CLASSIFIED UL EPH
ANSI/NSF 37 Air Curtain Fans for Customer Entry 12CS

PROJECT		
LOCATION		
ARCHITECT		
ENGINEER		REV. B
DWG. NO.	SHD07-AMB-ND-WMP	TITLE: BERNER MODEL SHD07 AIR CURTAIN AMBIENT SYSTEM
DATE	29JAN2020	
BY	S. Beil	
REPLACES	07MAR2018	BERNER INTERNATIONAL CORP. NEW CASTLE,PA.
BY	S. Beil	

Vanguard™
Steel Lockers

At a Glance

- Knock Down Construction
- Standard louvers for ventilation
- Classic III handle standard on QuickShip multi-point latch models
- 24 ga. body painted to match the door frame
- Many sizes available through QuickShip

Ventilation Options


Standard Louvers (S)


Full Louvers (O)


Mini Louvers (O)


Solid Door (O)


Visual Perf (O)

Door Handle Options

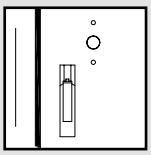
Die-Cast (S)

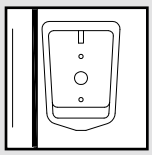
Classic III Recessed (O)

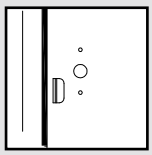
Friction Catch (SB)

S = Standard
O = Optional
SB = Standard on Box Lockers

For Vanguard specifications, see page 36.



Penco has been manufacturing lockers for decades that last for decades, and the Vanguard line is the embodiment of what it takes to withstand the daily use and abuse typically dealt to a locker.

The powder coat baked enamel finish is available in many standard colors, with body parts finished the same color as the doors, as standard.

For quieter operation, each latch hook features a noise reducing rubber bumper.

The welded door frames have mortise and tenon construction and are spot welded for lifetime rigidity. Every door has a continuous door strike. All hinges are full loop, 5-knuckle design.


1 Tier **2 Tier** **3 Tier** **4 Tier** **5 Tier** **6 Tier** **2 Person** **Duplex**


Available in 24 Colors
See Page 46

Vanguard™
Sizes and Dimensions

Vanguard 1, 2 & 3 Tier Lockers

		1 Tier				2 Tier						3 Tier			
Overall Height*		60”	72”	60”	72”	60”	72”	84”	60”	72”	84”	60”	72”	60”	72”
Opening Height*		60”	72”	60”	72”	30”	36”	42”	30”	36”	42”	20”	24”	20”	24”
Width	Depth	Die-Cast Handle		Classic III Handle		Die-Cast Handle			Classic III Handle			Die-Cast Handle		Classic III Handle	
9”	12”	6101V	6151V	6101R	6151R	6201V	6221V	-	6201R	6221R	-	-	-	6401R	6413R
	15”	6103V	6153V	6103R	6153R	6203V	6223V	-	6203R	6223R	-	-	-	6403R	6415R
	18”	6105V	6155V	6105R	6155R	6205V	6225V	-	6025R	6225R	-	-	-	6405R	6417R
12”	12”	6111V	6161V	6111R	6161R	6211V	6231V	6251V	6211R	6231R	6251R	6407V	6419V	6407R	6419R
	15”	6113V	6163V	6113R	6163R	6213V	6233V	6253V	6213R	6233R	6253R	6409V	6421V	6409R	6421R
	18”	6115V	6165V	6115R	6165R	6215V	6235V	6255V	6215R	6235R	6255R	6411V	6423V	6411R	6423R
	21”	6117V	6167V	6117R	6167R	6217V	6218V	-	6217R	6218R	-	6449V	-	6449R	6499R
	24”	6118V	6168V	6118R	6168R	6200V	6220V	-	6200R	6220R	-	-	-	-	-
15”	12”	6119V	6179V	6119R	6169R	6227V	6239V	-	6227R	6239R	-	-	6472V	-	6472R
	15”	6121V	6171V	6121R	6171R	6229V	6241V	6261V	6229R	6241R	6261R	-	6494V	-	6494R
	18”	6123V	6173V	6123R	6173R	6237V	6243V	6263V	6237R	6243R	6263R	-	6496V	-	6496R
	21”	6125V	6175V	6125R	6175R	6257V	6245V	-	6257R	6245R	-	-	-	-	-
	24”	6126V	6177V	6126R	6177R	6258V	6246V	-	-	6246R	-	-	-	-	-
18”	15”	6134V	6180V	6134R	6180R	-	6259V	-	-	6259R	-	-	-	-	-
	18”	6131V	6181V	6131R	6181R	-	6247V	-	-	6247R	-	-	-	-	-
	21”	6133V	6183V	6133R	6183R	-	6249V	-	-	6249R	-	-	-	-	-
	24”	6135V	6185V	6135R	6185R	-	6250V	-	-	6250R	-	-	-	-	-
24”	18”	6149V	6196V	6149R	6196R	-	-	-	-	-	-	-	-	-	-
	21”	6158V	6198V	6158R	6198R	-	-	-	-	-	-	-	-	-	-
	24”	6160V	6199V	6160R	6199R	-	6274V	-	-	6274R	-	-	-	-	-

Vanguard 2 Person and Duplex Lockers

		2 Person				Duplex			
Overall Height*		60”	72”	60”	72”	60”	72”	60”	72”
Unit Width	Unit Depth	Die-Cast Handle		Classic III Handle		Die-Cast Handle		Classic III Handle	
15”	12”	6510V	6500V	6510R	6500R	-	-	-	-
	15”	6506V	6501V	6506R	6501R	6519V	6531V	6519R	6531R
	18”	6437V	6503V	6437R	6503R	6521V	6533V	6521R	6533R
	21”	-	6505V	-	6505R	-	6535V	-	6535R
18”	15”	-	6509V	-	6509R	-	-	-	-
	18”	-	6515V	-	6515R	-	-	-	-
	21”	-	6525V	-	6525R	-	-	-	-

* All dimensions are in inches. Overall Height is the overall height of the locker frame, NOT including legs. Opening Height is the nominal height of the individual door opening.

Opening Height for 2 Person Lockers: for 60” high models, bottom doors are nominal 42” high; for 72” high models, bottom doors are nominal 54” high. Book compartment doors are nominal 9” high each.

Vanguard Box Lockers - 3, 4, 5 & 6 Tier

		3 Tier		4 Tier		5 Tier		6 Tier
Overall Ht.*		60”	72”	60”	72”	60”	72”	72”
Opening Ht.*		20”	24”	15”	18”	12”	14-2/5”	12”
Unit Width	Unit Depth	Cat. No.	Cat. No.	Cat. No.	Cat. No.	Cat. No.	Cat. No.	Cat. No.
9”	12”	6301V	6313V	-	-	-	-	-
	15”	6303V	6315V	-	-	-	-	-
	18”	6305V	6317V	-	-	-	-	-
12”	12”	6307V	6319V	6325V	6331V	6343V	6353V	6365V
	15”	6309V	6321V	6327V	6337V	6345V	6355V	6367V
	18”	6311V	6323V	6329V	6339V	6347V	6357V	6369V
	21”	6349V	6399V	6393V	6395V	-	6435V	6371V
15”	12”	-	6372V	-	-	-	-	6363V
	15”	-	6394V	6333V	6431V	6351V	6359V	6373V
	18”	-	6396V	-	6433V	6397V	6361V	6375V
	21”	-	-	-	-	-	-	6377V
18”	18”	-	6335V	-	-	-	-	6379V
	21”	-	-	-	-	-	-	6378V

Vanguard™
Specialty Lockers

Dual Lockers

A dual locker is a single tier locker with a vertical partition separating the area beneath the shelf into two compartments. It is ideally suited for situations where street clothes and work clothes are to be kept apart. It is generally used with lockers 15” or 18” wide and 18” or 21” deep. Guardian and Invincible II lockers can also be supplied as dual lockers.



Box Over Lockers



Provides a compact independent lockable door above a 60” high standard Vanguard Door. If a shelf is required in the lower compartment, it must be ordered separately.

Box Over Lockers - 72” High		
Unit Width	Unit Depth	Cat. No.
12”	12”	6439V
12”	15”	6441V
12”	18”	6443V
15”	15”	6436V
18”	18”	6445V
18”	21”	6447V

16 Person Locker

Accommodates 16 users in only 69” of floor space. Includes a 45” wide coat rod. Ideal for employee lockers. Accepts built-in locks or padlocks.



69”W x 18” D x 72”H. Cat. No. 6579V

Wall Mounted Locker with Coat Rod



A practical storage unit where space is at a premium. Four private compartments with a hanging area for 16 coats. When wall mounted, the floor below is kept clear for easy cleaning (wall anchors are not included). Can also be set on counters or cabinets (without coat rod).
45”W x 18”D x 13-5/8” H.
Cat. No. 68242

The Executive



The Executive is a custom-outfitted 24” wide double door locker which offers such optional personal amenities as multiple storage shelves, lockable inner storage compartment, and combination comb & brush tray with towel bar. Shown here with available Classic III stainless steel recessed handle and optional front and end bases.

It is especially appropriate for golf clubs. Other accessories available include golf ball tray, acrylic mirror and name card holder. For ordering information contact your Penco representative.

Half Height Locker, 1 Tier



Available in 30-1/2”, 36-1/2” and 48-1/2” heights; Available in 12”, 15” and 18” depths; 12” wide. Only 48-1/2” high lockers include a shelf for storage of books and small articles.

One High Box Locker



This 12” wide individual one high box locker provides storage for personal items and features standard box locker construction with friction catch door pull. Actual overall height is 13-5/8”.

7 and 8 Person Lockers





These efficient lockers are ideal for multiple user situations such as school gymnasium locker rooms. The box compartments (18”W x 12”H) are for permanent storage of athletic gear. When a user is present, the large locker (18”W x 60”H) is used for street clothes.

7 Person Locker			
Unit Width	Unit Depth	Unit Height	Cat. No.
36”	18”	72”	6573V
36”	21”	72”	6575V

8 Person Locker			
Unit Width	Unit Depth	Unit Height	Cat. No.
54”	18”	72”	6577V

ADA / Environmental

Americans with Disabilities Act Information (ADA)



Penco lockers commonly accepted for ADA or barrier-free assignments are single tier and double-tier (lower tier only) when equipped with the Classic III recessed handle with multi-point latching: Vanguard, Guardian, Invincible II, All-Welded and Angle Iron (with available modifications). Also, consider the SmartLocker® electronic system which features touchless entry. Other handle types and certain lock selections may not be recognized as ADA compliant without modification.

Single tier 60" or 72" high lockers with the Classic III recessed multi-point latch handles must have shelves relocated and/or added to accommodate ADAAG mandated reach ranges. Two tier 36" high openings with the Classic III recessed handle may be used by designating the lower tier for ADA compliance. An extra shelf should be ordered to bring the lowest reach point within the prescribed ADAAG range based upon side or forward reach. We recommend field drilling for these shelf locations on smaller requirements. The owner or architect may also require a handicapped access sign be placed on the door.

Other handles and configurations may sometimes be specified, but those above are the most appropriate based upon a literal interpretation. Attention should also be paid to the clear area in front of the lockers to meet other separate but related guidelines. Contact your factory representative for assistance, or go to www.access-board.gov/adaag/html/adaag.htm for a complete text of the ADA Accessibility guidelines.

Environmental Information



- Based upon the most recent information from our source mills, the recycled content of our steel lockers can range from 25% to over 50%. Because the percentage of recycled content may vary from project to project based on a number of variables, please contact our offices for detailed information on your specific requirement.

- Powder coating drastically reduces waste through high efficiency application & recovery methods.

- Penco's powder coat paint contains no solvents and as a result releases no Volatile Organic Compounds (VOC's) normally associated with wet paint processes.

- Our packaging contain at least 20% post-consumer recycled content.

- Approximately 34% of the U.S. population lives within a 500 mile radius of our manufacturing facility, requiring less fuel to ship our products to many destinations.



Made in USA

Penco Products, Inc. continues to manufacture every locker featured in this catalog in the United States. We believe that by capitalizing on the efficiency of our North Carolina plant as well as our experienced workforce and formidable buying power, we can remain the industry leader from right here at home.

With 475,000 square feet of manufacturing space and over 150,000 square feet at multiple QuickShip distribution centers throughout the United States, Penco is also able to deliver the industry's shortest lead times while reducing shipping time and mileage. This is the result of one company's ongoing commitment to delivering America's best storage solutions to both domestic and global marketplaces.

MADE IN U. S. A.

MODEL 6231R

ITEM #

Steel Lockers
Accessories

Locking System Options

Built-in Key Locks. Available in flat key or grooved key models. Dead bolt and spring bolt construction. Reversible for LH & RH applications.



Built-in Combination Locks. Available with five combination changes for security year to year. Master key controlled. Stainless steel escutcheon plate. Use dead bolt models for all but box lockers, which use spring bolt. Available in LH & RH.



Combination Padlocks. Available with and without master keying. 3 number dialing. Rust resistant. Fits box lockers, Die-Cast Handles, recessed handles, cremone handles and basket racks.



Note: For proper fit and security, padlock shackle must have a diameter of 9/32" or 5/16" and a distance of .75" to .81" between the top of the case and the underside of the shackle when in the locked position.

Coin Operated. Ideal for public or private applications that require security with the assurance that keys will be returned, or as a revenue producer. Fits most Penco lockers. Available in 3 types: coin return, coin collect and token operation. Not available for Defiant lockers.



ADA Compliant Locks

Key Lock Model No. 9707. Just insert key (turning not required) and lift latch pull to open door.



Key Lock Model No. 9676A. Has an oversized keyhead to facilitate turning.

Battery Powered Lock. ADA compliant lock that opens by touching a Button Key to the lock. When opened, an LED light flashes and audio indicator sounds. Lock uses programming key to set user access and a master key for administrative or management use.



Benches and Pedestals

A natural accessory for any locker room. Benches add permanent comfort and order to the floor plan arrangement.

Penco offers a choice of bench pedestal styles. Order two pedestals for standard benches 96" long or less; order three pedestals for benches over 96" long. The seat portion of ADA benches require a minimum of 4 pedestals, placed as shown in the photo of the Bench Bracket.

Bench Tops

Exceptionally strong. Made from selected hardwood and finished with clear lacquer.

For ADA (Americans With Disabilities Act) compliant benches, use 16" or 18" deep bench backs and 20" or 24" deep seats plus Bench Brackets to support the backs. Order Pedestals separately.

Bench Tops			
Unit Width	Unit Depth	Unit Thickness	Cat. No.
Standard Bench Tops			
36"	9-1/2"	1-1/4"	9611
48"	9-1/2"	1-1/4"	9600
48"	12"	1-1/4"	9622
60"	9-1/2"	1-1/4"	9601
72"	9-1/2"	1-1/4"	9602
84"	9-1/2"	1-1/4"	9603
96"	9-1/2"	1-1/4"	9604
108"	9-1/2"	1-1/4"	9605
120"	9-1/2"	1-1/4"	9606
132"	9-1/2"	1-1/4"	9607
144"	9-1/2"	1-1/4"	9608
ADA Compliant Benches			
42"	16"	1-1/4"	9634
48"	16"	1-1/4"	9635
42"	18"	1-1/4"	9625
48"	18"	1-1/4"	9628
42"	20"	1-1/4"	9636
48"	20"	1-1/4"	9632
42"	24"	1-1/4"	9624
48"	24"	1-1/4"	9623

A. Heavy Duty Bench Pedestal

16-1/4" high pedestal consists of a heavy duty steel tube welded to top and bottom flanges. Hardware for fastening to the bench only is included. Pedestal must be anchored to the floor. Order two or more per standard bench; four or more for ADA compliant bench. Available for quick shipment in 028 Gray and 073 Champagne. Available on production schedules in all standard colors. Cat. No. 60822H

B. Stainless Steel Free Standing Pedestal

This pedestal has a 14" wide base which allows for moveable free standing use. Holes in the bottom are provided for optional floor anchoring or for attachment of non-skid bumpers (see below). Hardware is supplied for fastening to the bench top. Height is 16-1/4". Cat. No. 60827H



Non-Skid Pedestal Kit for Stainless Steel Pedestal

Rubber non-skid bumpers to prevent damage to floors. Consists of set of 4 non marking rubber feet and fastening hardware. Order 1 kit per pedestal. Cat. No. 68420

Bench Bracket for Back of ADA Benches

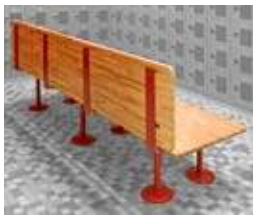

For attaching 16" or 18" backrest to 20" or 24" deep benches for ADA use. Sturdy steel construction. Order a minimum of 2 per back. Size is 19" x 19" x 2". Hardware included. Cat. No. 6ACXHP61H

Mirror



Made of acrylic plastic that will not break in normal usage. Mirror has an adhesive backing for easy installation. Size is 6" wide x 8" high. Cat. No. 96370

Specifications
Vanguard™ Lockers (KD)

Materials
Sheet Steel: All parts made from prime grade mild cold rolled sheet stell from surface imperfection, and capable of taking a high grade enamel finish.
Hinges: .074" thick, 2" high, double spun, full loop, tight pin, five-knuckle butt hinges, projection welded to door frame and securely fastened to the door with 2 steel rivets. Doors over 48" high shall have three hinges, all other doors shall have two hinges.
Finishing: Chemically pretreat metal with a multiple stage cleaning and metal preparation process. Finish coat shall be electrostatically applied powder coat enamel properly cured to paint manufacturer specifications to achieve optimum performance. All lockers shall be painted inside and outside with the same color.
Equipment: Coat hooks and coat rods are zinc plated. Truss fin head bolts and hex nuts are zinc plated.

Fabrication General
Construction: Built on the unit principle - each locker shall have an individual door and frame, individual top, bottom, back and shelves with common intermediate uprights separating compartments. Lockers shall be fabricated square, rigid and without warp. Doors shall be flat and free of distortion.
Door Frame: All door frame members to be not less than 16 gauge formed to a channel shape. Vertical members to have an additional flange to provide a continuous door strike. Intermembering parts to be mortised and tenoned and electrically welded together in a rigid assembly capable of resisting strains.
Cross frame members of 16 gauge channel shapes including intermediate cross frame on double and triple tier lockers shall be securely welded to vertical framing members to ensure rigidity.
Body: Bolt spacing in locker body construction not to exceed 9" o.c. All locker body components shall be made of cold rolled steel specially formed for added strength and rigidity and to ensure tight joints at fastening points. Tops & bottoms shall be 24 gauge with three sides formed 90° and the front offset formed to be flush with the horizontal frame member. Shelves shall be 24 gauge with four sides formed to 90°, the front edge shall have a second bend. Backs & sides shall be 24 gauge.

Doors: Doors 30" or higher shall be formed from one piece 16 gauge cold rolled sheet steel. Doors less than 12" wide shall be minimum of 18 gauge. Formations shall consist of a full channel shape on the lock side of adequate depth to fully conceal the lock bar, channel formation on the hinge side, and right angle formations across the top and bottom. Doors over 15" wide x 60" & 72" high shall have a 3" wide 20 gauge full height reinforcing pan welded to the inside face of the door on 6" centers.
Doors for box lockers 3, 4, 5, and 6 tier high shall have channel formations on lock and hinge side and have right angle flanges on the top and bottom. Doors less than 15" wide shall be 18 gauge, 15" wide or wider shall be 16 gauge. Box locker door for 3, 4, 5, and 6 openings high shall be pre-punched for padlock latch and friction catch and built-in combination and key locks.
Door Handle 1 & 2 Tier, 2 Person & Duplex: Handle to consist of zinc alloy die-cast case and handle. 40,000 PSI maximum tensile strength, chrome plated. Handle to be pulled out to move up latch bar and open door in one motion. Padlock eye for use with 9/32" diameter padlock shackle to be an integral part of handle and to be so located that extension of handle forms a padlock strike. Attachment to latch bar shall be tamper-proof and concealed inside the door. The case shall be kick proof type, shielding the movable part and provide a padlock strike to prevent scratching and marring the door. A lock hole cover plate shall be provided for use with padlocks.
Door Latching 1 & 2 Tier, 2 Person & Duplex: Doors to have latch clip engaging the door frame at three points on doors over 42" high and two points on all other doors. Locking device to be positive, automatic type, whereby locker door may be locked when open, then closed without unlocking. One rubber silencer shall be firmly secured in the frame at each heavy gauge latch hook. Latch clips shall be glass filled nylon for long life and low friction and shall hold doors shut by engaging the latch hooks.
Door Handle & Latching 3 to 6 Tier Box Lockers: Doors shall be punched for use with padlocks or built-in locks. Doors for use with padlocks shall be equipped with an 18 gauge combination door pull, staple and lock hole cover plate with integral friction catch.
Ventilation: Lockers with doors 36" to 72" high shall have two sets of louvers, one set near the top of the door and another set near the bottom of the door. Lockers with doors 30" or less in height, shall have a minimum of one set of louvers.
Number Plates: Each locker to be supplied with a polished aluminum number plate, 2-1/4" wide x 1" high, with black numerals not less than 3/8" high. Number plates shall be attached to the face of the door with two aluminum rivets.
Interior Equipment: Single-tier lockers 48-1/2" or higher shall have a hat shelf located approximately 9" below the top of locker; if less than 18" deep, locker shall have three single prong hooks and one double-prong ceiling hook on 9" and 12" wide lockers. Four single prong hooks are supplied on wider models. Single tier lockers 18" or more in depth shall have a coat rod instead of a ceiling hook. 30" & 36" high lockers shall have three single-prong wall hooks and one double-prong ceiling hook through 12" wide and four wall hooks for 15" or wider. 24" wide will have two double prong ceiling hooks. 20" & 24" high openings to have three wall hooks through 12" wide, and four wall hooks for 15" wide and wider. Hooks to be attached with two bolts per hook.

Locker Accessories
See locker Accessory Specifications.

Options
Body: Locker shall be assembled using rivets.
Recessed Handle 1, 2 & 3 Tier Latching: Delete the standard handle and provide handle recessed in the door with finger lift control. 20 gauge drawn pocket shall be brushed stainless steel securely fastened to the door with two tabs plus a positive tamper resistant decorative fastener. The pocket shall be of sufficient depth to prevent a combination padlock, built-in combination lock or key lock from protruding beyond the face of the door. A lock hole cover plate shall be provided for use with padlocks.
The lifting piece shall be 14 gauge formed steel, attached to the latching channel with one concealed retaining lug and one rivet assuring a positive two point connection. Handle finger lift shall have a padlock eye for use with a 9/32" diameter padlock shackle. It shall have a sound deadening molded comfortable finger lift. Note: adding a recessed handle changes the lower louver pattern.
Hush Tone Sound-Dampening Panels: Panels are designed to reduce sound levels when doors are slammed. They are 22 gauge and are die formed and have a full perimeter flange spot welded flush to the inside door surface. Louvers are not used when sound-dampening panels are provided.
Side and Back Ventilation: Sides and/or backs shall be perforated with 1/2" diameter holes in patterns of 42 holes per group.
Door Ventilation: Visual perforations shall consist of 5/8" wide x 1-1/8" high rectangular perforations in the door in standard manufacturer's patterns. Doors with visual perforations shall not have louvers.
Mini louvers shall be 5/8" wide x 1/4" high and be placed in doors in manufacturer's standard pattern. Doors with mini louvers shall not have standard louvers.
ADA Compliant Lockers: Handicap lockers shall have recessed handles and shall be single tier or the lower opening of a double tier locker. Locker bottom shall be a minimum of 15" off the floor, or an extra shelf placed 15" off the floor. Single tier lockers shall have a shelf 48" off the floor. Doors assigned for handicapped use shall have an appropriate symbol sign.

Execution:
Installation: Install metal lockers at location shown in accordance with manufacturers instructions for plumb, level, and flush installation.
Anchor Lockers to the floor and wall 36" on center or less as recommended by the manufacturer.
Install Sloping Hoods and Metal Fillers using concealed fasteners. Provide flush hairline joints against adjacent surfaces.
Install Benches by fastening bench tops to pedestals and securely anchoring to the floor using appropriate anchors for the floor material.
Adjust & Clean: Adjust doors and latches to operate without binding. Verify that latches are operating satisfactorily.
Touch Up marred finishes with factory supplied paint.

Penco Products, Inc. reserves the right to vary specifications consistent with a policy of continuous product improvement.

MANITOWOC

INDIGO NXT

iF0500N Ice Cube Machine

iF0500N Ice Cube Machine

Models

☐ IDF0500N ☐ IYF0500N



Indigo NXT Series iF0500N
Ice Machine on D570 Bin
*Ice machine and Bin sold separately

Designed for operators who know that ice is critical to their business, the Indigo NXT Series ice machine's preventative diagnostics continually monitor itself for reliable ice production. Improvements in cleanability and programmability make your ice machine easy to own and less expensive to operate.

- **New levels of Performance** – Showcasing an average of 12% lower energy consumption and a 23% reduction in condenser water usage. This translates into lower cost of ownership over the life of your machine.
- **easyTouch® Display** - New icon based touch screen takes the guess work out of owning and operating an ice machine.
- **Programmable Ice Production** – Now its super easy to program your ice machine to be off at certain times of the day to save money with fluctuating electrical rates. Also programmable by daily ice production volume and night time programming.
- **Easy to Clean Foodzone** – Hinge front door swing out for easy access. Removable water-trough, distribution tube, curtain, water probe and water pump for fast and efficient cleaning. Selected components are made with AlphaSan® antimicrobial.
- **Intelligent Diagnostics** – Provides 24 hour preventative maintenance and diagnostic feedback for trouble free operation.
- **Acoustical Ice Sensing Probe** – Unique patented technology allows for reliable operation in challenging water conditions and environments
- **DuraTech® Exterior** – Provides superior corrosion resistant above stainless steel. Innovative clear-coat resists fingerprints and dirt making it easier to keep clean.
- Available **LuminIce® II Virus and Bacteria Inhibitor** – Controls viruses, bacteria, mold and yeast within the food zone to keep the ice machine clean longer. A new sanitation icon lets you know the operational status.
- **Active Sense** – Insures consistent ice harvest in all environmental conditions. This software solution works in conjunction with the acoutiscal ice sensing probe improving reliability and performance.



Ice Machine Electric

115/60/1 standard
(208-230/60/1also available)

Minimum circuit ampacity:
Remote 115v : 14.8

Maximum fuse size:
Remote 20 amps

Specifications

BTU Per Hour:
3,800 (average),
and 6,000 (peak)

Refrigerant:
R404A CFS - Free

Operating Limits:

- Ambient Temperature Range:
  40 to 110 F (4.4 to 43.3 C)
  Water Temperature Range:
  40 to 90 F (4.4 to 32.2 C)
- Potable Water Pressure:
  Min. 20 psi (137.9 kPA)
  Max. 80 psi (551.1 kPA)
- Condenser Water Pressure:
  Min. 20 psi (137.9 kPA)
  Max. 276 psi (551.1 kPA)

Ice Shape



Half Dice
⅜" x 1⅛" x ⅞"
(.95 x 2.86 x 2.22 cm)



Dice
⅞" x ⅞" x ⅞"
(2.22 x 2.22 x 2.22 cm)

2110 South 26th Street
Manitowoc, WI 54220

Tel: 1.920.682.0161
Fax: 1.920.683.7589

www.manitowocice.com

WELBILT

MANITOWOC®

Indigo® NXT™ iF0500N Ice Cube Machine

iF0500N on D-570 Storage Bin

Ⓐ Electrical Entrance (2) Options
Ⓑ 3/8" (0.95 cm) F.P.T. Water Condenser Inlet (water-cooled units)
Ⓒ 1/2" (1.27 cm) F.P.T. Water Condenser Outlet (water-cooled units)
Ⓓ 1/2" (1.27 cm) Auxillary Base Drain Socket
Ⓔ 3/8" (0.95 cm) F.P.T. Ice Making Water Inlet
Ⓕ 1/2" (1.27 cm) F.P.T. Ice Making Water Drain
Ⓖ 3/4" (1.91 cm) Bin Drain

Installation Note
Minimum installation clearance:

Top/side: 12" (30.50 cm)Back is 5" (12.7 cm)

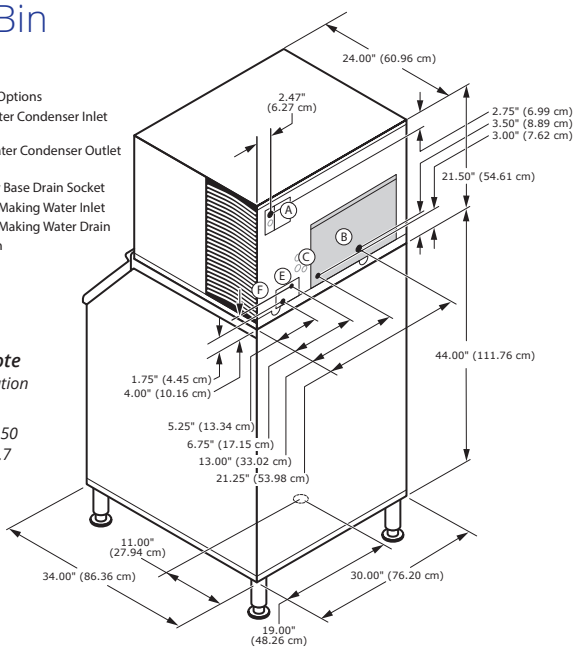

Space-Saving Design



	iF0500N D-400	iF0500N D-570
Height	59.50" 151.13 cm	71.50" 181.61 cm
Width	30.00" 76.2 cm	30.00" 76.2 cm
Depth	34.00" 86.30 cm	34.00" 86.30 cm
Bin Storage	365 lbs. 165.7 kgs.	532 lbs. 241.1 kgs.

Height includes adjustable bin legs 6.00" to 8.00", (15.24 to 20.32 cm) set at 6.00" (15.24 cm).
Bin capacity is based on 90% of the volume x 33 lbs/ft3 average density of ice.

Specifications

	Model	Ice Shape	Ice Production 24 Hours		Power Usage kWh/100 lbs. @90°Air/70°F	Potable Water Usage/100 lbs. 45.4 kgs. of Ice
			70°Air/ 50°F Water	90°Air/ 70°F Water	1 Ph	
REMOTE COOLED	IDF0500N	dice	510 lbs.	445 lbs.	5.96	19 Gal.
			231 kgs	202 kgs		71.9 L
	IYF0500N	half-dice	525 lbs.	465 lbs.	6.0	19 Gal.
			238 kgs	211 kgs		71.9 L
	* Ice storage bin and JCF0500 remote condenser for remote units must be order separately					

Standard Remote Tubing Kits

Tubing Kit	Tubing Lenght
RT20R404	20 ft / 6.1 m
RT35R404	35 ft / 10.7 m
RT50R404	50 ft / 15.2

Remote Ambient Operating Temperature: -20 to 120F (-29C to 49C)



Standard air-cooled remote JCF0500-161

Accessories

LuminIce® II Virus and Bacteria Inhibitor
controls viruses and bactereia in the ice machine.



External Scoop holder
Protect the ice scoop with the NSF approved versatile scoop holder.



Arctic Pure® Plus
reduce sediments and chlorine contaminants down to .5 microns.
Use with a Pre-filter is recommended.



iAuCS®
schedules and performs routine ice machine cleaning automatically.



Welbilt reserves the right to make changes to the design or specifications without prior notice.

2110 South 26th Street
Manitowoc, WI 54220

Tel: 1.920.682.0161
Fax: 1.920.683.7589

www.manitowocice.com
7797C 05/2021

WELBILT®

Manitowoc

ICE MACHINE WARRANTY

Manitowoc Ice, Inc. (hereinafter referred to as the "COMPANY") warrants for a period of thirty-six months from the installation date (except as limited below) that new ice machines manufactured by the COMPANY shall be free of defects in material or workmanship under normal and proper use and maintenance as specified by the COMPANY and upon proper installation and start-up in accordance with the instruction manual supplied with the ice machine. The COMPANY'S warranty hereunder with respect to the compressor shall apply for an additional twenty-four months, excluding all labor charges, and with respect to the evaporator for an additional twenty-four months, including labor charges.

The obligation of the COMPANY under this warranty is limited to the repair or replacement of parts, components, or assemblies that in the opinion of the COMPANY are defective. This warranty is further limited to the cost of parts, components or assemblies and standard straight time labor charges at the servicing location.

Time and hourly rate schedules, as published from time to time by the COMPANY, apply to all service procedures. Additional expenses including without limitation, travel time, overtime premium, material cost, accessing or removal of the ice machine, or shipping are the responsibility of the owner, along with all maintenance, adjustments, cleaning, and ice purchases. Labor covered under this warranty must be performed by a COMPANY Contracted Service Representative or a refrigeration service agency as qualified and authorized by the COMPANY'S local Distributor. The COMPANY'S liability under this warranty shall in no event be greater than the actual purchase price paid by customer for the ice machine.

The foregoing warranty shall not apply to (1) any part or assembly that has been altered, modified, or changed; (2) any part or assembly that has been subjected to misuse, abuse, neglect, or accidents; (3) any ice machine that has been installed and/or maintained inconsistent with the technical instructions provided by the COMPANY; or (4) any ice machine initially installed more than five years from the serial number production date. This warranty shall not apply if the Ice Machine's refrigeration system is modified with a condenser, heat reclaim device, or parts and assemblies other than those manufactured by the COMPANY, unless the COMPANY approves these modifications for specific locations in writing.

THIS WARRANTY IS IN LIEU OF ALL OTHER WARRANTIES OR GUARANTEES OF ANY KIND, EXPRESSED OR IMPLIED, INCLUDING ANY IMPLIED WARRANTY OF MERCHANTABILITY OR FITNESS FOR A PARTICULAR PURPOSE.

In no event shall the COMPANY be liable for any special, indirect, incidental or consequential damages. Upon the expiration of the warranty period, the COMPANY'S liability under this warranty shall terminate.

The foregoing warranty shall constitute the sole liability of the COMPANY and the exclusive remedy of the customer or user. To secure prompt and continuing warranty service, the warranty registration card or register on line within five (5) days from the installation date.

MANITOWOC ICE, INC.
2110 So. 26th St., P.O. Box 1720, Manitowoc, WI 54221-1720
Telephone: 920-682-0161 • Fax: 920-683-7585
Web Site - www.manitowocice.com
Form 80-0373-3 Rev. 01/02

Ice Storage Bins

Model

☐ D320 ☐ D400 ☐ D420 ☐ D570 ☐ D970

D Bins

.75" (1.90 cm) Bin drain

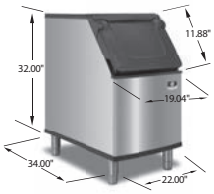

D320
264 lbs. (120 kgs)



D570
532 lbs. (241 kgs)

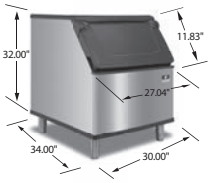

D400
365 lbs. (166 kgs)

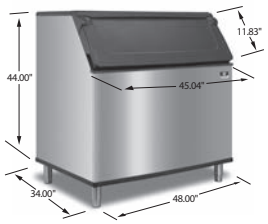

D970
882 lbs (400 kgs)



D420
383 lbs. (174 kgs)



Ergonomic NSF approved sanitary ice scoop included

D Bin Features

New Sanitary Scoop Ergonomic NSF approved sanitary ice scoop included with each bin. Built-in knuckle and thumb guard. Unique molded retaining lip allows maximum scooping every time. Per scoop capacity approximately 5.3/ lbs (2.4 kg)

Scoop Holder options New built-in scoop holder, keeps the ice scoop handle above the ice, or purchases the optional NSF approved External Scoop Holder Kit # K00461.

New Door design Clever built in side grips allow you to lift the bin door from anywhere you are standing (left, right or center) even when you have just one hand free.

Foamed Insulated Door Insulates the ice bin, reduces sweat on the door, helps keep ice lasting longer.

Stay up door Unique cammed bin door self-latch keeps the door in the open position and keeps the employee safe when scooping ice.

Ergonomic Door design Door is angled 53 degrees to allow for easier access to the ice in the bin especially when scooping from the bottom.

Duratech Metal Finish Manitowoc exterior material has better corrosion resistance than stainless steel, is smudge resistant and easy to keep clean.

New Bin liner Polyurethane Artic Blue bin liner accentuates the crisp clear ice from a Manitowoc Ice Machine.

Warranty

Bin & Accessories: 3 Year Parts & Labor.

	D-Bin Capacities				D-Bin Dimensions					
	*Application Capacity		**2018 AHRI Capacity		Height		Width		Depth	
D Bin Model	lbs.	kgs	Cu. ft	Cu. M	in.	cm	in.	cm	in.	cm
D320	264	119.90	8.9	0.25	38	96.5	22	55.9	34	86.4
D420	383	173.79	12.9	0.37	50	127	22	55.9	34	86.4
D400	365	165.70	12.3	0.35	38	96.5	30	76.2	34	86.4
D570	532	241.14	17.9	0.51	50	127	30	76.2	34	86.4
D970	882	400.11	29.7	0.84	50	127	48	121.9	34	86.4

*Application Capacity based on 90% of the total volume x 33 lbs/ ft3 average density of ice.
Ice must be managed

***2018 AHRI certified measurement for bin capacity

Above bin heights include leg height of of 6" / 15.24 cm
All bins include a sanitary plastic scoop and one set of adjustable legs chrome legs (6-7.75in/15.24-20.32cm).
External Scoop holder order separately Kit # K00461
Metal Scoop order separately Kit # K00463

Manitowoc Ice reserves the right to make changes to the design or specifications without prior notice.

2110 South 26th Street
Manitowoc, WI 54220

Tel: 1.920.682.0161
Fax: 1.920.683.7589

www.manitowocice.com
6453E
6/22

Manitowoc

Ice Storage Bins

D Bins

Indigo Ice Machines Series												
Machine			iT420	iT620	iT0300	iT450	iT0500 &iF0500N	iF0600N, iF0600C, iT0750	iF0900N, iT0900, iF0900C	iT1200, iT1200C	iF1400C, iF1800C	iT1500, iT1900
Machine Capacity @90/70 F			375	465	240	378	440	555, 530	710, 714	950, 1000	1200 1470 1600	1360, 1455
Bins	Bin Cap	Width	22"	22"	30"	30"	30"	30"	30"	30"	30"	48"
D320	264	22"	*	*								
D420	383	22"	*	*								
D400	365	30"	K00472	K00472	*	*	*	*	NR	NR	NR	
D570	532	30"	K00472	K00472	*	*	*	*	*	*	NR	
D970	882	48"	NR	NR	NR	K00470	K00470	K00470	K00470	K00470	K00471 + K00470	*

Manitowoc Flaker and Nugget Machines											
		Machine	RNP0320	RFP0320	RNP0620	RFP0620	RNF1020	RFF1220C	RNF1100	RFF1300 & RNF2000C	RFF2200C
Machine cap			251	286	451	540	825	958	825	874	1702
Bins	Bin cap	Width	22"	22"	22"	22"	22"	22"	30"	30"	36.7"
D320	264	22"	*	*	NR	NR	NR	NR			
D420	383	22"	*	*	*	*	NR	NR			
D400	365	30"	K00472	K00472	K00472	K00472	NR	NR	NR	NR	
D570	532	30"	NR	K00472	K00472	K00472	NR	NR	*	*	
D970	882	48"	NR	NR	K00473	K00473	K00473 if 2 used.	K00473 if 2 used.	K00470	K00470	K00470

An optional adapter is required when putting a narrower ice machine on a wider bin.
* No adapter is needed
NR= Not Recommend. Bin too small or too large for application.
Putting a wider machine on narrower bin is not an option.
Machines side by side must be water cooled, remote, or use a top air discharge for self-contained air cooled.
Application Bin Capacity shown in lbs using the AHRI rating based on 90% of total volume x 33 lbs/ft3 average density of ice.
Machine capacity shown in lbs/24hrs using the AHRI rating base at 90F ambient, 70F water temperature

Available Accessories

See price book for replacement: scoops, legs, specialty legs and casters

K00146 Convenient Ice Bagger

Includes bagger, D-bin adapter, and 250 bags and ties (Not for D320 or D400) Order K00068 replacement bags



K00461 External Scoop Holder

NSF approved. Can be mounted on the left or right side of bins, horizontally or vertically or on a wall.



K00463 Metal Scoop

Indestructible NFS approved aluminum alloy with sanitary knuckle and thumb guard. Works with K00461external scoop holder or hangs inside the D-Bin series. Limited life time guarantee.



K00462 Secure Fastening Kit

Securely fast the Indigo NXT ice machine head to the pre-drilled inserts on the back of the D-bin series. Stainless steel flanged feet attach to bin and can be screwed to the floor





Manitowoc Ice reserves the right to make changes to the design or specifications without prior notice.

2110 South 26th Street
Manitowoc, WI 54220

Tel: 1.920.682.0161
Fax: 1.920.683.7589

www.manitowocice.com
6453E
6/22

Manitowoc

LIMITED WARRANTY FOR ICE STORAGE BIN & DISPENSERS

LIMITED WARRANTY

Manitowoc Ice a division of Manitowoc FSG Operations, LLC, ("Company") warrants that new Ice Storage Bins or Dispensers sold by Company shall be free of defects in material or workmanship under normal and proper use and maintenance as specified by the Company and upon proper installation and start-up in accordance with the instruction manual supplied.

WHAT IS COVERED

- Parts and Labor for a period of three (3) years.
- Accessory Ice Transport Carts for two (2) years parts and labor.

The Ice Storage Bin / Dispenser warranty begins on the date of the original installation. This warranty shall not apply to any Ice Storage Bin or Dispenser initially installed more than five (5) years from the serial number production date.

The obligation of the Company under this warranty is limited to the repair or replacement of parts, components, or assemblies that in the sole opinion of the Company are defective. This warranty is further limited to the cost of parts, components or assemblies and standard straight time labor charges at the servicing location.

Time and hourly rate schedules, as published from time to time by the Company, apply to all service procedures. Additional expenses including without limitation, travel time, overtime premium, material cost, accessing or removal of the Ice Storage Bin / Dispenser, or shipping are the responsibility of the purchaser, along with all maintenance, adjustments, cleaning, and ice purchases. Labor covered under this warranty must be performed by an approved Company contracted Service Representative or a refrigeration service agency as qualified and authorized by the Company's local Distributor. The Company's liability under this warranty shall in no event be greater than the actual purchase price paid by purchaser for the Ice Storage Bin or Dispenser.

EXCLUSIONS FROM COVERAGE

- Repair or replacement of parts required because of misuse, improper care or storage, negligence, alteration, use of incompatible supplies or lack of specified maintenance shall be excluded.
- Normal maintenance items.
  Failures caused by adverse environmental, water conditions, or improper drainage.
- Improper or unauthorized repair.
- Any Ice Storage Bin / Dispenser that has been installed and/or maintained inconsistent with the instructions provided by the Company.
- Parts subject to damage beyond the control of Company, or to Ice Storage Bin's / Dispenser's which have been subject to accidents, damage in shipment, fire, floods, other hazards or acts of God that are beyond the control of the Company.
- This Limited Warranty shall not apply if the Ice Storage Bin / Dispenser is modified with parts and assemblies other than those manufactured by the Company, unless the Company approves these modifications for specific locations in writing prior to the commencement of such modification.

LIMITATIONS OF LIABILITY

The preceding paragraphs set forth the exclusive remedy for all claims based on failure of, or defect in, Ice Storage Bins or Dispensers sold hereunder, whether the failure or defect arises before or during the warranty period, and whether a claim, however instituted, is based on contract, indemnity, warranty, tort (including negligence), strict liability, implied by statute, common-law or otherwise , and Company and agents shall not be liable for any claims for personal injuries or consequential damages or loss, howsoever caused. Upon the expiration of the warranty period, all such liability shall terminate. THE FOREGOING WARRANTIES ARE EXCLUSIVE AND IN LIEU OF ALL OTHER WARRANTIES, WHETHER WRITTEN, ORAL, IMPLIED OR STATUTORY NO IMPLIED WARRANTY OF MERCHANTABILITY OR FITNESS FOR PARTICULAR PURPOSE SHALL APPLY, COMPANY DOES NOT WARRANT ANY PRODUCTS OR SERVICES OF OTHERS

REMEDIES

The liability of Company for breach of any warranty obligation hereunder is limited to: (i) the repair or replacement of the Ice Storage Bin or Dispenser on which the liability is based, or with respect to services, re-performance of the services; or (ii) at Company's option, the refund of the amount paid for said equipment or services. Any breach by Company with respect to any item or unit of equipment or services shall be deemed a breach with respect to that item or unit or service only

WARRANTY CLAIM PROCEDURE

Customer shall be responsible to:

- Complete and return warranty registration card or register on line within five (5) days from the installation date.
- All warranty service must be preformed by an approved Manitowoc contracted or authorized Service Representative. To schedule a service appointment contact your local Manitowoc Service Representative or visit us at www.manitowocice.com to find a Service Representative near you.

GOVERNING LAW

This Limited Warranty shall be governed by the laws of the state of Wisconsin, USA, excluding their conflicts of law principles. The United Nations Convention on Contracts for the International Sale of Goods is hereby excluded in its entirety from application to this Limited Warranty

COMPLETE AND RETAIN FOR YOUR RECORD:

Distributor/Dealer _____

Model Number _____

Serial Number _____

Installation Date _____

Manitowoc Ice
2110 South 26th Street
P.0. Box 1720
Manitowoc, WI 54221-1720
Web site: www.manitowocice.com

Rev 2 1/2/2012

K00463 - Metal Scoop





When using the Manitowoc metal scoop, users are presented with improved sanitation and a ergonomic grip when scooping ice. With the lifetime warranty offered, it'll be the last ice scoop you'll ever have to buy!

Standard Features

- Best scoop you'll ever own. Comes with a limited life time warranty.
- Indestructible NSF Certified cast aluminum.
- Knuckle guard improves sanitation—prevents hand from contacting the ice.
- Rubber handle prevents hand from getting cold when the scoop is left in the bin.
- Can be hung inside D-bins and fits in the optional Multi-Mount External scoop holder.
- Large 5.3 lbs /85 oz scooping capacity

Warranty

The limited lifetime warranty on the metal scoop allows for free replacement for as long as you own your scoop under normal and proper use

Multi-Mount Accessory (sold separately)

Multi-Mount External Scoop Holder (K00461) protects ice scoop with NSF approved versatile scoop holder. (For use with D-Bins, B-Bins and most competitive bins).

For Manitowoc LB bins: order hanger **K00482 kit along with K00461.**

** For assembly Video, Scan or Click "QR" Code.*

(Bin Mount) *(Wall Mount)*



Scoop Dimensions

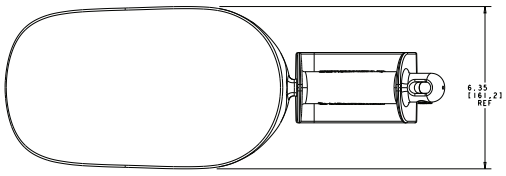

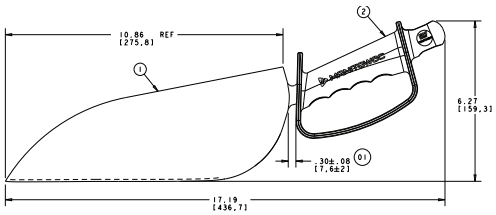

AutoQuotes NSF

2110 South 26th Street
Manitowoc, WI 54220

Tel: 1.920.682.0161
Fax: 1.920.683.7589

www.manitowocice.com
6767C_K00463
06/22

K00463 Metal Scoop

Manitowoc

K00461
Multi-Mount External Scoop Holder

K00461 Multi-Mount External Scoop Holder



The multi-mount external scoop holder improves overall sanitation. With the addition of the holder, it makes daily operations much quicker and easier. Keep your scoop protected and never lose your scoop AGAIN!

For and assembly video visit manitowocice.com/video or the Manitowoc YouTube channel.

(Wall Mount Video QR)

Standard Features

- NSF Approved. Commercial grade, metal frame with ABS plastic shield.
- Can be mounted 7 different ways (right or left side of bin, horizontal or vertical on bin, or on the wall either direction).
- Easy assemble. No tools required.
- Fits Manitowoc's new plastic and metal scoops. (plastic #0000015595 and metal #K00463)
- Use on Manitowoc / Koolaire ice storage bins, any wall, or competitor bins.

Hanger Dimensions

Bin hanger included in kit K00461.

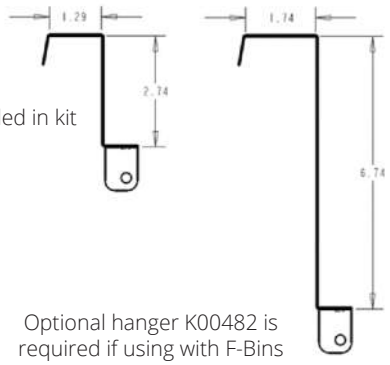

Optional hanger K00482 is required if using with F-Bins or LB-Style Bins.



Horizontal left entry wall mount



Horizontal right entry wall mount



Vertical wall mount

(Bin Mount Video QR)



Horizontal left entry bin mount



Horizontal right entry bin mount



Vertical left side bin mount



Vertical right side bin mount

For Manitowoc F bins or LB-Style Bins: order Hanger K00482 kit along with K00461

2110 South 26th Street
Manitowoc, WI 54220

Tel: 1.920.682.0161
Fax: 1.920.683.7589

www.manitowocice.com
6633D_MII_K00461
06/22

Manitowoc

Vertical Discharge Remote Condenser

for Indigo® NXT™ Series Ice Cube Machines with R404A refrigerant

Models ☐ JCF0500 ☐ JCF0500Q(Coated Coil) ☐ JCF0900 ☐ JCF0900Q(Coated Coil)



JCF900
Remote Condenser

Standard Features

Vertical discharge remote condenser is available for Indigo NXT Series iF0500N, iF0600N and iF0900N ice machines. Refer to ice machine specification sheet for equipment dimensions, production capacities, electrical requirements, and ice storage bin compatibility.

Condenser operation range from -20°F (-29°C) to 120°F (49°C). Can be installed with up to 20" (50.8 cm) of bottom clearance.

Remote system consists of a remote condenser and interconnecting refrigerant lines. All components are pre-charged with refrigerant and have quick-connect fittings for convenient installation. Order ice cube machine, ice storage bin, vertical discharge remote condenser and line set separately.

Warranty

- 3-year parts and labor. See warranty statement for complete details.

Remote, air-cooled condenser system improves efficiency and ice production, conserving energy.

Manitowoc remote condenser systems effectively dissipate heat at a convenient location, indoors or outdoors, away from the ice machine. This maximizes ice-making capability and minimizes air conditioning loads by lowering the ambient air temperature at the ice machine. **For locations close to salt spray environments use coated coil model ("Q")**

Single Indigo Series Ice Machine	Remote Condenser
iF0500N	JCF0500 & Q
iF0600N	JCF0900 & Q
iF0900N	JCF0900 & Q

Installation Information and Dimensions

Maximum Location Distance - combined vertical and horizontal distances from ice machine to condenser must comply with guidelines.

Maximum Line Length: 100' (30 m)*

Maximum Vertical Rise: 35' (10.5 m) above ice machine.

Maximum Vertical Drop: 15' (4.5 m) below ice machine.

To calculate other acceptable horizontal and vertical combinations, refer to remote condenser installation instructions.

** Remote condenser has refrigerant charge for up to 50' (15 m) line length. Over 50' (15 m) requires additional refrigerant charge at time of installation.*

Vertical Discharge Remote Condenser
for Indigo® NXT™ Series Ice Cube Machines with R404A refrigerant

2110 South 26th Street
Manitowoc, WI 54220

Tel: 1.920.682.0161
Fax: 1.920.683.7589

www.manitowocice.com

Vertical Discharge Remote Condenser

for Indigo® NXT™ Series Ice Cube Machines with R404A refrigerant

Electric

Electrical power to the remote condenser is intended to be supplied from the ice machine; however, if necessary, a separate electrical power source can be used.

Remote Indigo NXT Series Ice Machine

Indigo Model	Electrical Service*	Minimum Circuit Ampacity		Maximum Fuse size	
IT0500N	115/60/1	14.8		20	
iF0600N	208-230/60/1	10.7		15	
iF0900N	208-230/60/1	12.2	9.7	20	15

** Shaded box indicates 3 phase. Consult factory.*
HACR circuit breakers can be used in place of fuses.

Indigo NXT Series Remote Condensers with R404A Refrigerant

Condenser Indigo Model	Matching Ice Machine	Condenser			
		Electrical Service*	Amperage	Weight	
				lbs.	kgs.
JCF0500	IF0500N	115v/60/1	1.82	76	34
JCF0900	iF0600N, iF0900N	208-230/60/1	1.0	78	35

** Consult factory. HACR circuit breakers can be used in place of fuses.*

Both models available with coated coils ("Q") for extra corrosion protection in salt spray environments. Recommend for use within 5 miles of the coast.

Standard Interconnecting Refrigerant Lines

Model	Line Length		Weight	
	ft.	m.	lbs.	kgs
RT-20-R404A	20	6.07	10	4.54
RT-35-R404A	35	10.67	15	6.8
RT-50-R404A	50	15.24	22	9.98

Order "RT" line sets separately for iF0500N, iF0600N and iF0900N

The line sets above are pre-charged and come with quick connect fittings.

Typical Installation

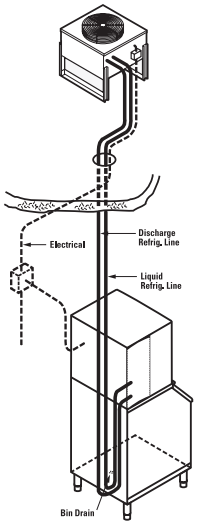

JCF0500 and JCF0900 Remote Condenser

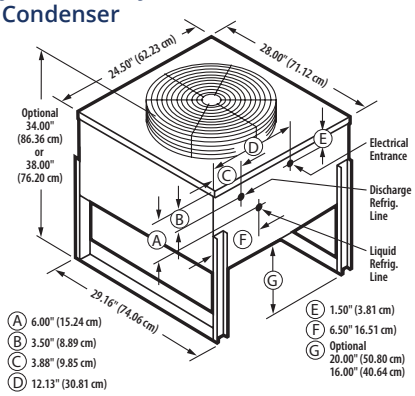

2110 South 26th Street
Manitowoc, WI 54220

Tel: 1.920.682.0161
Fax: 1.920.683.7589

www.manitowocice.com
6654C 06/22

Manitowoc

Arctic Pure Plus

Premium Water Filters for Ice Machines

arctic pure+

Arctic Pure Plus

Premium Water Filters for Ice Machines

Models

☐ AR-PRE-P ☐ AR-10000-P ☐ AR-20000-P ☐ AR-40000-P



AR-PRE-P

- Pre-filter, removes hard sediments, sand, dirt and rust from water, and protects solenoids, valves and inlets to the ice maker
- Compatible with **all** models



AR-10000-P

- Chlorine Reduction
- SLOW PHOS scale inhibitor
- 0.5 Microns filtration
- 15,000 gallon capacity
- Models 0-600 lbs/day



AR-20000-P

- Chlorine Reduction
- SLOW PHOS scale inhibitor
- 0.5 Microns filtration
- 20,000 gallon capacity
- Models 601-1000 lbs/day



AR-40000-P

- Chlorine Reduction
- SLOW PHOS scale inhibitor
- 0.5 Microns filtration
- 40,000 gallon capacity
- Models 1001-2500 lbs/day

Standard Features and Benefits

• 95% average reduction of chlorine from incoming water supply assures the ice tastes and smells fresher, clearer and more enjoyable

• Silver impregnated carbon block provides antimicrobial protection against potential bacteria microorganisms, algae, mold and slime on ice machine surfaces

• Engineered with SLOW PHOS (slowly soluble polyphosphate) to inhibit scale formation and corrosion

• Reduces dirt, submicron particles (down to 0.5 microns) and eliminates contaminates such as cryptosporidium and giardia cysts.

• Ultra-fine filtration (0.5 Microns) with silver impregnated carbon block and slowly soluble polyphosphates provides triple protection from harmful contaminates that can affect your ice machine's performance

• Reduces ice machine cost and maintenance frequency by reducing scale, impurities, and contaminates that can enter the machine.

• Extends the life of the ice machine, when the filters are changed every 6 months or when water pressure is below 20 psi.

• Optimizes the daily performance of the machine, allowing it run at full capacity producing the freshest and purist ice possible

• Cartridges are easy to install, safe, sanitary and can be changed out rapidly, "on the fly" without turning off the water supply

• **Certified to NSF/ANSI Standard 42, 53, 372, and CSA B483.1** by IAPMO and meets CUPC requirements.

IAPMO R&T Certifications

System Model #	Replace. Cartridge	Std. 42 Claims	Std. 53 Claims	Chlorine Red. Cap
AR-PRE-P	K00496	Part. Class 3	None	None
AR-10000-P	K00493	Chlorine & Part. Class 1	Cyst	15,000 gal
AR-20000-P	K00494	Chlorine & Part. Class 1	Cyst	20,000 gal
AR-40000-P	K00495	Chlorine & Part. Class 1	Cyst	40,000 gal

- CSAB483.1:For Canadian water standards
- *NSF/ANSI 53 cyst claim only valid at or below rated flow rate
- Warning : Do not use with water that is microbiologically unsafe or of unknown quality without adequate disinfections before or after the unit. For cold water use only. Not for residential use.

Note on Pre-filter: A pre-filter is recommended for all applications to achieve maximum filtration efficiency and cartridge life.

Warranty

3-Year parts and labor warranty on head, shroud, hardware, and mounting assembly.
(water filter cartridge not included).
Residential Warranty - 1 Year

2110 South 26th Street
Manitowoc, WI 54220

Tel: 1.920.682.0161
Fax: 1.920.683.7589

www.manitowocice.com

Manitowoc

arctic pure+

Arctic Pure Plus

Premium Water Filters for Ice Machines

Dimensions

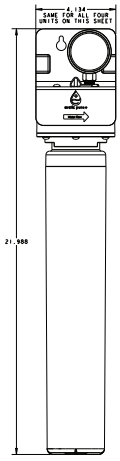

AR-PRE-P SYSTEM
4.13"W x 4.48"D x 22"H
10.5 x 11.37 x 55.9 cm

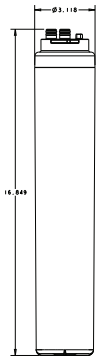

K00496 REP. CART.
3.1"W x 3.1"D x 16.8"H
7.9 x 7.9 x 42.6 cm

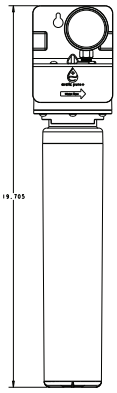

AR-10000-P SYSTEM
4.13"W x 4.48"D x 19.7"H
10.5 x 11.37 x 50.04 cm



K00493 REP. CART.
3.1"W x 3.1"D x 14.6"H
7.9 x 7.9 x 37.08 cm

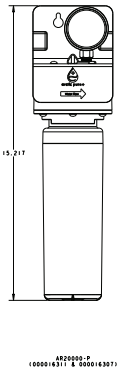

AR-20000-P SYSTEM
4.13"W x 4.48"D x 15.2"H
10.5 x 11.37 x 38.6 cm

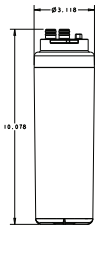

K00494 REP. CART.
3.1"W x 3.1"D x 10.1"H
7.9 x 7.9 x 25.6 cm

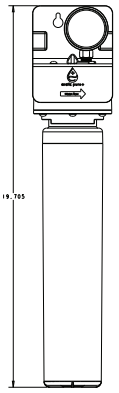

AR-40000-P SYSTEM
4.13"W x 4.48"D x 19.7"H
10.5 x 11.37 x 50.04 cm



K00495 REP. CART.
3.1"W x 3.1"D x 14.6"H
7.9 x 7.9 x 37.08 cm

Usage Matrix

Filter System (Replacement Cartridges)	AR-PRE-P (K00496)	AR-10000-P (K00493)	AR-20000-P (K00494)	AR-40000-P (K00495)
All Under Counters (Cubers, Flakers & Nuggets) Counter Top Nugget	X	X		
Modular Cubers: IT0300-IT750, IBF0620 Modular Flaker: RFF0320 Modular Nugget: RNF320	X	X		
Modular Cubers: IT0900, IBF0820C & IBT1020C Modular Flaker: RFF0620 RFF1220C, RFF1300 Modular Nuggets: RNF0620, RNF1020C, RNF1100	X		X	
Modular Cubers: IT1200, IT1500 & IT1900, IF1400C &IF1800C Modular Flaker: RFF2200C Modular Nugget: RNF2000C	X			X

Specifications and Shipping

System	Replacement Cartridge	Filtration level	Capacity gal	Service Flow Rate (max. gpm (lpm)	Operating Air Temp F (C)	Operating Water Temp F (C)	Operating Pressure psi (bar)	Mtg. Holes from Center in (cm)	Approx. Shipping Weight lbs (kg)	Qty System Lots	Qty Cartridge Lots
AR-PRE-P	K00496	5 Micron	NA	1.5 (5.7)	40°-110°F (4.4°- 43.3°)	40°-90°F (4.4°- 32.2°)	35 -125 (2.41-8.61)	1.5 (3.81)	4 (1.81)	6	12
AR-10000-P	K00493	0.5 Microns	15,000	0.75 (2.84)				1.5 (3.81)	5 (2.26)	6	12
AR-20000-P	K00494	0.5 Microns	20,000	1.25 (4.73)				1.5 (3.81)	4 (1.81)	6	12
AR-40000-P	K00495	0.5 Microns	40,000	2.0 (7.6)				1.5 (3.81)	5 (2.26)	6	12

Installation Tips

- Install vertically with cartridge hanging down
- Allow 2.5" (6.35cm) clearance below the cartridge for easy replacement
- Flush cartridge by running water through filter for ten (10) minutes
- Use copper or polyethylene 3/8" hose for Quick Connect fitting
- Always follow local plumping codes

Operation Tips

- Change cartridge every 6 months or when pressure gauge indicates below 35 psi (which ever comes first)
- Twist 1/4 turn to left to remove cartridge. Twist 1/4 turn to the right to install cartridge (Water can be left on)
- Protect from freezing—Failure to do so may result in cracking of the filter housing and cause water leakage
- When using non-Manitowoc ice makers, consult the ice machine's manufactures for water supply usage requirements.
- It is recommended to have your water supply tested by a professional to determine your water treatment needs.

Manitowoc Ice reserves the right to make changes to the design or specifications without prior notice.

2110 South 26th Street
Manitowoc, WI 54220

Tel: 1.920.682.0161
Fax: 1.920.683.7589

www.manitowocice.com
7805B_ArcticPurePlus
06/22

Item # _____

Job _____

SUPER ADJUSTABLE™ SUPER ERECTA SHELF®
WIRE SHELVING

Super Adjustable™ Super Erecta Wire Shelving is the most advanced and innovative wire storage system available.

- **Maximum Space Utilization:** The Corner Release System encourages repositioning of shelves during initial assembly to reclaim wasted vertical space. In some cases, reclaimed vertical space will allow an extra shelving tier to be added to the storage unit resulting in a 25% increase in storage capacity!
- **Easily Assembled:** The unique Corner Release System enables quick and easy repositioning of shelves during the initial set up to accommodate different package or container sizes. "Total Assembly" is complete only after the shelves are properly spaced to maximize storage. SiteSelect™ Posts, with the double-groove visual guide feature, have circular grooves at 1" (25mm) increments and are numbered at 2" (51mm) intervals to easily identify proper shelf locations.
- **Easily Adjustable:** The unique shelf design and SiteSelect™ Posts enable "tool-free", quick adjustment at 1" (25mm) increments along the entire height of the post.
- **Improved Rigidity:** An enhanced Corner Release System has made Super Adjustable™ the most rigid, easily adjustable shelving system ever.
- **Strong:** Super Adjustable™ shelves hold as much weight as traditional Super Erecta wire shelving. Stationary units hold a maximum of 2,000 lb. (910kg). Maximum weight capacity per shelf (48" [1219mm] or shorter = 800 lb. [364kg]; longer than 48" [1219mm] = 600 lb. [273kg])
- **Choice of Finishes:** Super Adjustable™ Super Erecta shelving is available in a variety of finishes: chrome-plated for dry storage; Metroseal 3™ with antimicrobial product protection and Type 304 stainless steel for corrosive environments.
- **Accessories:** Compatible with the entire system of Super Erecta shelves and accessories. See Catalog Sheets 10.04, 10.05, 10.06 for more information.



Dry Storage — Chrome

NSF



Corner Release System

Super Adjustable™ Advantage . . .



Easy "no tool" shelf adjustment

1" 25mm spacing minimizes dead space

Efficient use of space allows more storage levels to be added.

Storage efficiency can increase by 25% or more!



*MICROBAN® and the MICROBAN® symbol are registered trademarks of the Microban Products Company, Huntersville, NC.

InterMetro Industries Corporation
North Washington Street
Wilkes-Barre, PA 18705
www.metro.com

10.01A

Job _____

SUPER ADJUSTABLE™ SUPER ERECTA SHELF®
WIRE SHELVING

Dimensions

Super Adjustable™ Super Erecta Wire Shelving

Model No. Chrome	Model No. Metroseal 3	Model No. Stainless	Shelf Width/Length (in.)	(mm)	Approx. Pkd. Wt. (lbs.)	(kg)
A1424NC	A1424NK3	A1424NS	14x24	355x610	6	2.7
A1430NC	A1430NK3	A1430NS	14x30	355x760	7	3.2
A1436NC	A1436NK3	A1436NS	14x36	355x914	8	3.6
A1442NC	A1442NK3	A1442NS	14x42	355x1066	9 1/2	4.3
A1448NC	A1448NK3	A1448NS	14x48	355x1219	10 1/2	4.7
A1460NC	A1460NK3	A1460NS	14x60	355x1524	14	6.3
A1472NC	A1472NK3	A1472NS	14x72	355x1829	17	7.7
A1824NC	A1824NK3	A1824NS	18x24	457x610	7	3.2
A1830NC	A1830NK3	A1830NS	18x30	457x760	8	3.6
A1836NC	A1836NK3	A1836NS	18x36	457x914	9 1/2	4.3
A1842NC	A1842NK3	A1842NS	18x42	457x1066	11	5.0
A1848NC	A1848NK3	A1848NS	18x48	457x1219	12	5.4
A1854NC	A1854NK3	A1854NS	18x54	457x1370	14 1/2	6.6
A1860NC	A1860NK3	A1860NS	18x60	457x1524	17	7.7
A1872NC	A1872NK3	A1872NS	18x72	457x1829	20	9.1
A2124NC	A2124NK3	A2124NS	21x24	530x610	8	3.6
A2130NC	A2130NK3	A2130NS	21x30	530x760	9	4.1
A2136NC	A2136NK3	A2136NS	21x36	530x914	11	5.0
A2142NC	A2142NK3	A2142NS	21x42	530x1066	12	5.4
A2148NC	A2148NK3	A2148NS	21x48	530x1219	14	6.4
A2154NC	A2154NK3	A2154NS	21x54	530x1370	16	7.3
A2160NC	A2160NK3	A2160NS	21x60	530x1524	18	8.2
A2172NC	A2172NK3	A2172NS	21x72	530x1829	24	10.9
A2424NC	A2424NK3	A2424NS	24x24	610x610	9	4.1
A2430NC	A2430NK3	A2430NS	24x30	610x760	11	5.0
A2436NC	A2436NK3	A2436NS	24x36	610x914	13	5.9
A2442NC	A2442NK3	A2442NS	24x42	610x1066	15	6.8
A2448NC	A2448NK3	A2448NS	24x48	610x1219	16	7.3
A2454NC	A2454NK3	A2454NS	24x54	610x1370	18	8.6
A2460NC	A2460NK3	A2460NS	24x60	610x1524	21	9.5
A2472NC	A2472NK3	A2472NS	24x72	610x1829	26	11.8
A3036NC			30x36	760x914	15	6.8
A3048NC			30x48	760x1219	21	9.5
A3060NC			30x60	760x1524	26 1/2	11.8
A3072NC			30x72	760x1829	31	14.0
A3636NC			36x36	914x914	18	8.2
A3648NC			36x48	914x1219	23	10.4
A3660NC			36x60	914x1524	29	13.1
A3672NC			36x72	914x1829	34 1/2	15.4

NOTE: MICROBAN® protects the Metroseal 3 coating from bacteria, mold, mildew and fungi that cause odors, stains and product degradation. For Metroseal 3 shelving information see sheet #10.10A.



All Environments — Metroseal 3™ with *Microban® Antimicrobial Product Protection

Mobile Options



Stem Casters



Dolly Trucks



Replacement Parts
Each kit includes components for one original Super Adjustable or Super Adjustable shelf; (4) wedges, (4) sleeves, (4) shelf releases.
Model No. SAKITA2

SiteSelect™ Posts

STATIONARY Actual Height* (in.)	(mm)	Model No. Plated	Model No. Metroseal 3	Model No. Stainless	MOBILE Actual Height* (in.)	(mm)	Model No. Plated	Model No. Metroseal 3	Model No. Stainless	Approx. Pkd. Wt. (lbs.)	(kg)
7 3/8	187	7P	7PK3	7PS	6 3/4	171	7UP	7UPK3	7UPS	1/2	0.3
14 3/8	365	13P	13PK3	13PS	13 3/4	349	13UP	13UPK3	13UPS	1	0.5
28 3/8	720	27P	27PK3	27PS	27 3/4	704	27UP	27UPK3	27UPS	1 3/4	0.75
34 3/8	873	33P	33PK3	33PS	33 3/4	857	33UP	33UPK3	33UPS	2	0.9
54 7/16	1382	54P	54PK3	54PS	53 13/16	1366	54UP	54UPK3	54UPS	3	1.4
62 7/16	1585	63P	63PK3	63PS	61 13/16	1570	63UP	63UPK3	63UPS	3 1/2	1.6
—	—	—	—	—	69 3/4	1771	70UP	—	—	3 3/4	1.7
74 1/2	1892	74P	74PK3	74PS	73 7/8	1876	74UP	74UPK3	74UPS	4	1.8
86 1/2	2197	86P	86PK3	86PS	85 7/8	2181	86UP	86UPK3	86UPS	4 1/2	2.0
96 1/2	2450	**96P	96PK3	96PS						5 1/2	2.5

*Actual height for the stationary post includes the post cap and the leveling bolt completely tightened.

Important: When ordering by components remember that for maximum stability, units should be kept as wide and low as possible.

All Metro Catalog Sheets are available on our Web Site: **www.metro.com**

InterMetro Industries Corporation
North Washington Street, Wilkes-Barre, PA 18705
Phone: 570-825-2741 • Fax: 570-825-2852

For Product Information:
U.S. and Canada: 1-800-992-1776
Outside U.S. and Canada: www.metro.com/contactus

L02-006A
Printed in U.S.A. Rev. 2/17

Information and specifications are subject to change without notice. Please confirm at time of order.

Copyright © 2017 InterMetro Industries Corp.

SUPER ADJUSTABLE™ SUPER ERECTA SHELF®
Adjustable Wire Shelving

thermalrite

by CrownTonka California, Inc.

custom, modular cold storage







quality

value

service

design

warehouse systems • food service • environmental enclosures

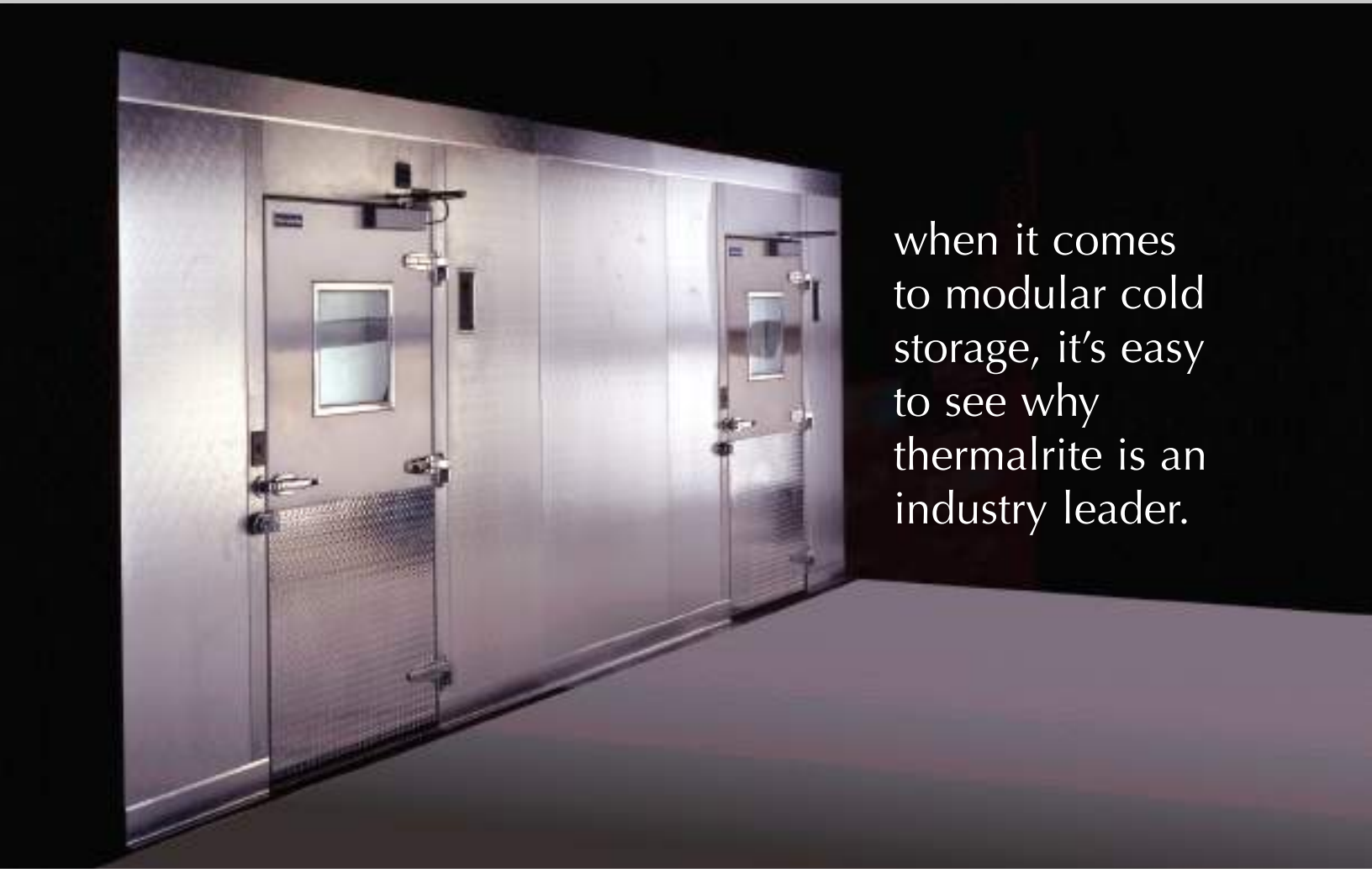

quality

Thermalrite® has been manufacturing Walk-in Coolers and Freezers for the food service industry since 1988. Our goal is to manufacture the finest quality walk-ins available and provide you with an unsurpassed level of service. All of our walk-ins are CAD designed to your exact specifications. Our panels are engineered and built for easy installation. During each phase of the manufacturing process we scrutinize quality, fit and finish to ensure that you get the best possible product.

service

From Quotations to Engineering, from Manufacturing to Delivery and Installation, we offer you outstanding service. Our trained, experienced Inside Sales Team, provides helpful, knowledgeable service from inquiry to delivery. Our plants in California, Minnesota, and Tennessee provide close proximity to all markets.

value

We use only the best U. L. Class 1 Non-CFC Urethane insulation available. Thermalrite® and its suppliers have incurred considerable expense in the development of ENVIROFOAM, an environmentally sensitive urethane foam. Our insulation is designed to bond with our panels to give strength and durability.

All of this translates into superior insulating properties which keep your operating costs at a minimum.

design flexibility

Custom designs – indoor, outdoor, angular, rectangular or any combination are all available in a variety of finishes and in varying thickness of four, five or six inches. We serve the warehouse, food service, institutional and environmental industries with walk-in coolers and freezers. With seamless panels up to 30 feet in length, we are ideal for warehouse applications and long spans. Our modular construction allows for easy remodeling, relocation or expansion.

why thermalrite?

- Custom Designs at Standard Prices. You get the exact size and shape you need.
- In-house design and engineering. We can help you to determine what design or configuration will best fit your unique requirements.
- Strongest all-foam panels on the market. High density foam rail with metal facing and foam-in place bonding equals strong long lasting panels.
- Doors and frames that are second to none. Doors are a full four inches thick and frames are reinforced for strength.
- Highest insulation values and best fire rating add up to the best insulating material available. UL, class 1, Non CFC ENVIROFOAM saves energy costs and meets building code requirements.
- Environmentally Friendly ENVIROFOAM.
- NSF Certified, UL Listed, USDA Approved panels.
- Engineered and Built for ease of installation.
- Experience. Thermalrite® has been manufacturing walk-in coolers and freezers since 1988.
- Foaming conducted in temperature-controlled area and controlled by the latest computerized equipment to insure proper mix density and fill resulting in the finest insulated panel available.



- The best walk-in value on the market.
- Parts department to supply your needs correctly and quickly (usually within 24 hours).
- Three strategically located manufacturing plants for quick and cost-effective delivery throughout North America.
- One-stop-shop for your complete walk-in package; refrigeration, shelving, and installation – hassle-free convenience.
- We stand behind our product – we honor our obligations. Check out our record.

classifications*

- NSF Certified
- U.L., Class 1 listed Urethane foam insulation in all Thermalrite® walk-ins.
- USDA Approved Materials
- UL Electric
- State of New York, MEA
- California Bureau of Home Furnishings and Thermal Insulation License
- State of Oregon
- Wisconsin (DHILR)
- City of Houston

*Thermalrite® insulated panels are manufactured to meet local codes in most cities. It is incumbent upon the customer to consult with the local inspector to assure compliance.



thermalrite installation examples

food service

- Anaheim Arena- The Pond
- Burger King
- Cheesecake Factory
- Hard Rock Cafe
- MGM Grand Hotel
- Kaiser Hospital
- Bakersfield Country Club
- Scenic Heights Elementary- Minnesota
- Brown County Prison
- UCLA

environmental and scientific

- Seattle Zoo
- Santa Barbara Zoo
- Hughes Aircraft
- Allied Signal
- Themodynamics

architectural specifications

metal and finishes

Standard interior and exterior metal finish:

- 26 Ga. Bright stucco embossed galvanized steel

Optional finishes available

- 26 Ga. Painted stucco embossed galvanized steel. Standard colors available are white, black and almond. Optional colors are available by request.
- .032 Stucco embossed aluminum
- .040 Smooth white aluminum
- .040 Stucco embossed aluminum
- 22 Ga. Type 304 stainless steel #4 finish

Interior floor finishes

- .050 Smooth aluminum
- 24 Ga. Type 304 stainless steel with #2B finish
- .100 aluminum diamond thermalrite

Other gauges and finishes are available upon request.

insulation

Standard insulation is foamed-in-place Non-CFC U.L. Class 1 rated urethane foam. It has a thermal conductivity (K Factor) of .120* BTU/Hr/Sq. ft/Degrees/F/in. and overall heat transfer coefficient (U Factor) of not more than .030 BTU/Hr.Sq.Ft.

Class 1 urethane foam has a flame spread of 25 or less overall and smoke developed of less than 450. Recommended wall thickness is nominal 4″. Foam rail panels also available in 4″ - 6″ thickness.

panel construction

Walk-ins are all custom designed to fit the individual customers' needs. Each panel consists of an interior and exterior metal pan with structural, high density foam rail frame. These pans are separated by rigid foam-in place self-extinguishing urethane insulation which adheres to the interior of the pans providing increased structural strength. All panels have tongue and groove construction and gasket is applied to all joints forming an air-tight seal.

panel fasteners

All panels are joined together using a cam-locking fastener, operated with a hex wrench. Access holes are sealed with vinyl snap-in caps. Standard construction is cam-locking ceilings to walls; lag-down ceilings are also available.

floorless models

Alignment screed is furnished for all floorless models. Screeds are designed to be anchored to masonry floors to provide an accurate template for the erection of wall panels.

floor panels

Floors are built with metal bonded to exterior grade underlayment and foamed-inplace. Floors are capable of maintaining a load maximum of 1000lbs./sq/ft. when uniformly distributed, and are NSF certified.

walk-in accessories and features

Standard:

- 2 1/2″ Dial Thermometer
- 100 Watt incandescent light fixture with vapor proof globe
- Flush Mount OSHA press switch factory installed and wired to outside ceiling
- NSF Certified Construction
- UL Listed Class 1 Non-CFC Urethane Foam
- USDA Approved Materials

Optional

- Refrigeration Systems
- Roof Systems for outdoor applications
- Display Doors
- Double Acting Doors
- Strip Curtains
- Alarm Systems
- Digital Thermometers
- Storage Shelving
- Built in Wall Supports
- Heavy Duty Floor Plates
- Foamed in Place Electrical Boxes

door, jamb and hardware

Standard Thermalrite walk-in doors are self-closing, flush mount type.

Standard features:

- High quality heavy duty hardware with safety release
- Magnetic door gasket
- Heated jamb (freezer only)
- Heated threshold (freezer only)
- Heated pressure relief vent (freezer only)
- Doors up to 48″ width are pre-hung
- Heavy duty door frame

Optional Door Features and Accessories:

- Bi-parting doors
- Reach-in Service Doors
- Sliding Doors
- Heavy Duty Impact Plate
- View Ports

Thermalrite® reserves the right to change specifications without notice.

thermalrite
by CrownTonka California, Inc.
6514 East 26th Street • Commerce, CA 90040
(800) 290-7073 • sales@thermalrite.com
www.thermalrite.com

Typical Wall, "T", Corners

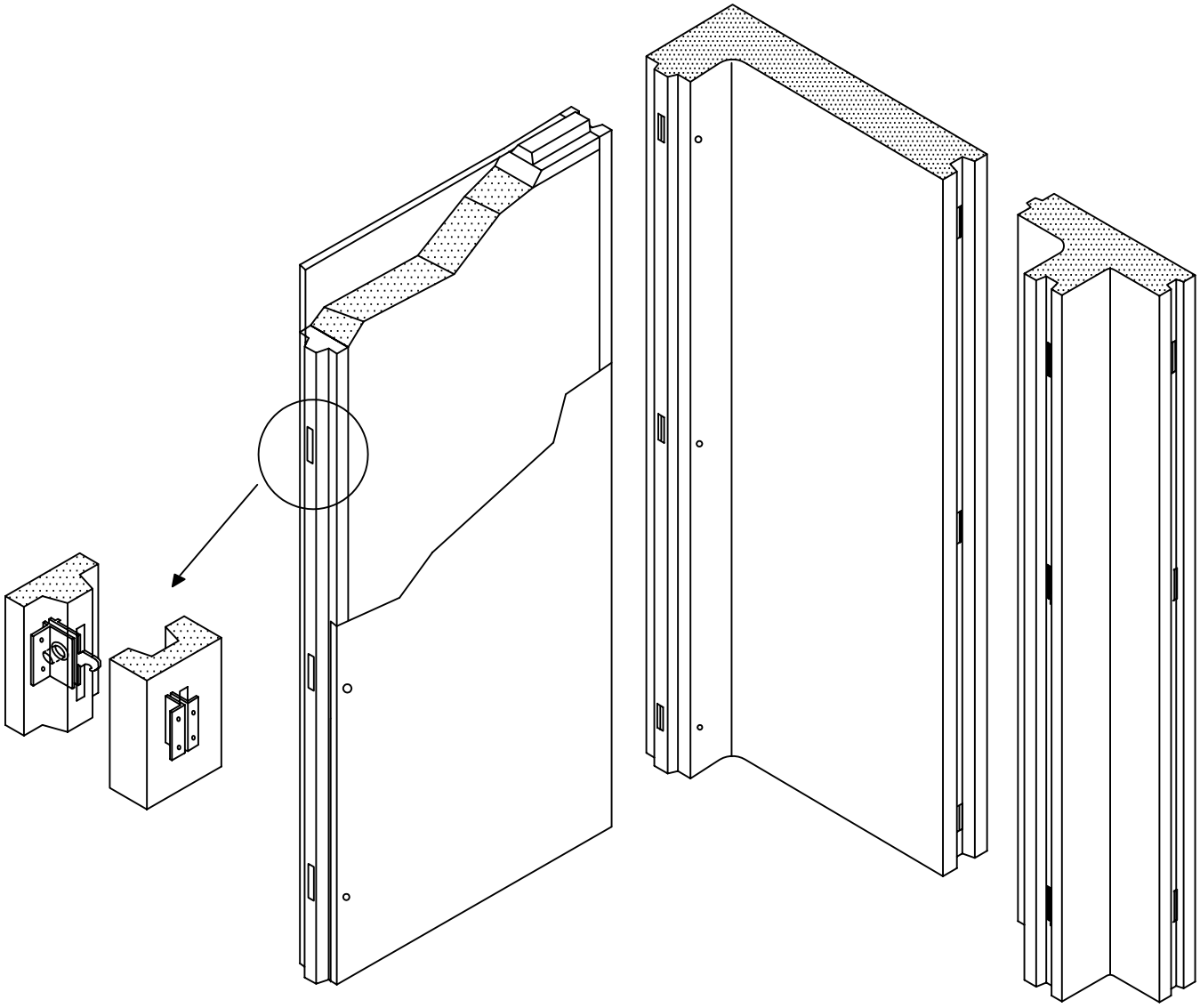

STANDARD WALL PANEL SIZES ARE 47" WIDE, CORNER SECTION
5 1/4" x ANY LENGTH (47") TO MEET CUSTOM REQUIREMENTS
WITH 1/4" RADIUS ON INTERIOR FOR N.S.F. REQUIREMENTS.
WALL PANEL HEIGHT PER CUSTOMER REQUEST (FROM 0" UP TO 30'-0" HIGH).

thermalrite
WALK-IN COOLER AND FREEZERS
4215 E. AIRPORT DRIVE
ONTARIO, CA. 91761
phone (909) 605-6419 fax (909) 605-6413

0027C DEADBOLT LOCKING HANDLE



- Deadbolt security for walk-ins at the economy of a locking pull handle
- Deadbolt is secured using cylinder lock or padlock, or both
- Deadbolt can be locked in open position
- Self-adjusts to wall thickness variations
- Standard, twist-off glow in the dark inside release knob prevents lock-ins
- Two 1/4 turn inside release options meet ADA requirements for fast exit
  - 1/4 turn Inside Release, shown above with handle
  - 27c 1/4 Turn Low Conduction Inside Release, shown to the right
- Locking mechanism located outside resists freeze-up

Flush offset and 4" thick wall standard. Other wall thicknesses available. Consult factory.
1-5/8" offset option listed in model number table; Available down to 1/2"

U.S. Patent No.: 6,526,788
1/4 Turn Inside Release Patent No.: 9,068,376 & 6,526,788

Specifications

LATCH

MATERIAL:

Die-cast Zamak handle housing, tongue and strike.

FINISHES:

Polished chrome and brushed chrome.

PACKAGING

6 per carton

LATCH

LOCKING MECHANISMS:

Cylinder lock (may be keyed alike or randomly). Accepts 5/16" (7.9mm) dia. shank padlock (customer supplied).

MOUNTING:

Drilled and countersunk for 1/4" (6.4mm) fillister head screws.

STRIKE

MATERIAL:

Die-cast Zamak housing, brass rod, glow-in-the-dark polycarbonate turn-knob.

FINISHES:

Housing same as latch.

1248 SPRING ASSISTED HINGE



- Spring mechanism adds extra closing force to overcome air resistance on heavy walk-in doors
- Special high-lift cam system outperforms similar spring hinges
- Cam-rise action reduces gasket wear, even with irregular floors
- Built-in dwell holds door open beyond 130°
- Simple manual operation reverses hinges for use on right or left-opening door

U.S. Trademark: 2,415,070

Specifications

MATERIAL

High pressure die-cast zinc with self-lubricating nylon cam.

MOUNTING

WEIGHT

Approx. 19.5 lb (8.85 kg) per carton

PACKAGING

6 each

1094 SURECLOSE™ HYDRAULIC DOOR CLOSERS



- Powerful gas-loaded hydraulic cylinder guarantees controlled closure
- Exposed and concealed mounting models
- Solid steel enclosed housing and bend-resistant hook assure long wear in heavy use
- Extra-wide hook ensures roller pick-up and overcomes alignment problems
- Life-cycle tested to operate reliably even after a half-million closures
- Perfect complement for Kason Walk-in hinges and latches where self-closing doors with controlled closure are needed
- Mounting slots on hook allow for easy adjustment to compensate for door sag, keeping roller aligned with hook for proper function

U.S. Trademarks: 3,212,100 & 5,809,887

MATERIAL
Heavy gauge steel. Housing and hook also available in stainless steel
FINISH
Polished or brushed chrome, stainless steel, or powder coat
MOUNTING
Holes drilled for No. 10 (5.0 mm) screws (included).

KASON
57 AMLAJACK BLVD. NEWNAN, GA 30265
1-800-935-2766
WWW.KASONIND.COM

PROJECT NAME: _____
LOCATION: _____
IDN# _____ QUANITY: _____
CATALOG# _____

CAT NO. 1806LED

LIGHT FIXTURE AND OPTIC GLOBE, LED

1806 LED FIXTURE



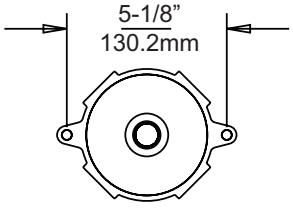

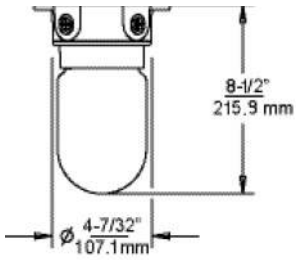

SAVES MONEY AND ENERGY

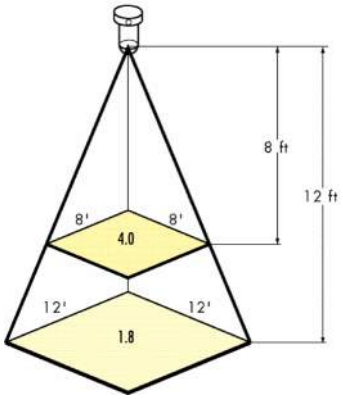

FEATURES AND SPECIFICATIONS

- Lumanaire: Rating IP-65 for wet and cold environments
- Light Output: 980 lumens
- 85 lumens/watt- exceeds Federal Energy Act requirements
- Bright 5000K color temperature
- Rated 50,000 hour life
- No Ultraviolet Emission: Does Not Attact Insects
- Ideal operating temperature range from -40F to 70F (-40C to 21C)
- Power: 120 VAC at 60 Htz (line voltage)
- Rating: 11.5 watt, 120 V
- Five 1/2 NPT conduit connections
- GU24 socket
- Globe: Lexan with Light Intensifying Focused Optics (LIFO)
- Housing: Aluminum
- 5 year limited warranty on fixture
- 3 year limited warranty on lamp
- RoHS compliant and NSF listed
- Lamps and fixture cULus listed
- U.S. Patent Pending

LIGHT DISTRIBUTION FOR 1806 LED

Height in Feet	Average FC for Single Fixture Over Indicated Area	
	8' x 8'	12' x 12'
5	5.5	2.9
8	4.0	2.3
9	-	2.1
12	-	1.8
13	-	-
16	-	-
17	-	-
20	-	-

Model No.	Model Description
1806LED000	Fixture w/ Lamp and Optic Globe
1806LED014	Replacement Lamp, GU-24, 120 VAC, 11.5W, 60 HZ, 5000K Color Temperature

Above Packaging: 25 per Carton, approx. 17 lb. (7.7kg)

ACCESSORIES

11901A00005.....LOW BAY MOTION SENSOR
11901A00007.....HIGH BAY MOTION SENSOR
11806LED014.....REPLACEMENT LAMP

NSF COMPONENT
c UL us LISTED
GreenGuard BY KASON INDUSTRIES
LM-79 TESTED
UL FILE No.E333932

APPROVALS:

DATE:

© 2012 Kason Industries, Inc., All Rights Reserved

LED VAPOR TIGHT LINEAR FIXTURE
AL SERIES



48"45W LED Vapor Tight

FEATURES:

- Built-in aluminum heat sink, with V0 Fire-Rated PC housing and improved safety factor of Hi-pot>5000V
- Unique design and appearance
- Meets wide beam lighting demands
- IP65 Rated
- Surface mount standard with optional suspension kit
- White Finish standard
- CRI>82
- Delivered Lumens: 5400
- Efficacy less than 120(LM/W)
- Designed for cold, wet environments
- Qualified for utility rebates
- Instant on lighting in cold environments

PRODUCT DESCRIPTION:

A cost effective LED Vapor Tight Fixture that features full length polycarbonate (PC) lens and one piece white Polycarbonate body. Used for utility lighting in walk in coolers,freezers and beer caves.

CONSTRUCTION:

- Integral design and fully compact structure
- Frosted Lens
- Universal voltage 100V-277V
- Non-Dimming standard
- Class II Fixtures

Class II

IK09

IP65

ORDERING:

ORDER CODE	MODEL	DESCRIPTION	CCT	SIZE
73322	AL-TP45WYYK4FT1N&	4'LED VAPOR TIGHT 100-277V 45W Non-Dim 5000K	5000K	4'

EVERIDGE
Every step of the way

SPECIFICATIONS:

ITEM	SPECIFICATION	AL-TP45WYYK4FT1N& DETAILS
GENERAL PERFORMANCE	Color Temperature (CCT)	5000K
	Wattage	45W
	DeliverLumens	5400
	Efficacy(LM/W)	>120
	Spacing Angle	1.18(0° - 180°)
	Beam Angle	270°(V)
	SDCM	≤5
	Color Consistency	Proprietary binning for uniform color
	Lumen Maintenance (L70)	50,000 hours
ELECTRICAL	Power Factor	Over 0.90
	Maximun THD	<20%
	Input Voltage	100–277V
	Power Consum. (tested)	<42.20
PHYSICAL	Dimensions (LxWxH)	49.3"x3.70"x2.37"
	Dimensions/OccCntrl	49.3"x3.70"x2.37"
	Weight	5+/–.5lbs
	Housing	V0 Fire–Rated PC
	Lens	Ribbed Clear Polycarbonate Std
	Mounting	Ceiling Surface mount (Hardware incl)
	Operating Temperature	–20°F to 104°F (–28°C to 40°C)
CERTIFICATION	Certifications	DLC, UL, Lm79, Lm80
	Material Usage	RoHS compliant: no mercury
	Environment	Indoor Covered - Wet, IP65
	Warranty	5 Years

L70 LUMEN MAINTENANCE AT 25°C PER IESNA TM-21-2008	
MODELS	IESNA CALCULATED LIFE
AL–TP45WYYK4FT1N&	54,000Hrs

*Above does not include 347v series calculated life.

EVERIDGE
Every step of the way

MODULARM 75LC multi-monitor

FOR WALK-IN COOLERS AND FREEZERS

"A New Industry Standard in Walk-In Monitoring"

TEMPERATURE ALARM



- Protects against product loss
- Patented **Autoset™** Technology automatically adjusts alarm setpoints for a cooler or a freezer (Eliminates manual programming in most applications)

DOOR AJAR ALARM



- Saves Energy
- Improves efficiency
- Reduces coil icing
- Lowers maintenance costs
- Helps maintain product integrity & prevent loss



AC FAILURE ALARM



- Protects against product loss in AC Failure
- Built-In Battery Back-up with recharging circuitry maintains operation in AC Failure

PANIC ALARM



- Increases operator safety
- **Manual** & **Automatic** Panic Alarms Provide Maximum Protection
- Low voltage ***IP-1*** Illuminated Push Button for panic alarm activation



IP-1

PATENTED AUTOMATIC LIGHT CONTROL

- Saves Energy
- Eliminates Conventional Light Switches
- ***IP-1*** Illuminated Push Button provides light control inside the box
- Motion sensor compatible for light activation
- Energy Act Compliant

- ◆ SAVES ENERGY
- ◆ INCREASES OPERATOR SAFETY
- ◆ PROTECTS PERISHABLES
- ◆ LOWERS MAINTENANCE COSTS

MODULARM CORPORATION
61 Mall Drive, Commack, NY 11725 • PH: 631.864.3860 • FX:631:864.3863
http://www.modularm.com

MODULARM 75LC multi-monitor

FOR WALK-IN COOLERS AND FREEZERS

FEATURES

- COMPACT DESIGN FOR FLUSH OR SURFACE MOUNTING IN A SINGLE GANG WEATHERPROOF ENCLOSURE
- SIMPLE 3 BUTTON USER INTERFACE
- PAS-PRO™ PROGRAMMING IS SIMPLE AND SECURE
- BUILT-IN POWER SUPPLY (NO REMOTE TRANSFORMER)
- BUILT-IN RECHARGEABLE BATTERY WITH RECHARGING CIRCUITRY
- BUILT-IN AUDIBLE & VISUAL ALARM ANNUNCIATION
- BUILT-IN PROGRAMMABLE DRY CONTACTS (N/O & N/C) FOR REMOTE NOTIFICATION
- HI & LO ALARM TEMP SETPOINTS
- RINGBACK FEATURE PROVIDES TIMED REPEAT AUDIBLE ALARMS DURING AN ALARM CONDITION
- READOUT IN ºF OR ºC WITH AUTOMATIC SCALE CONVERSION
- ADJUSTABLE ALARM DELAYS
- OPTIONAL LOW VOLTAGE IP-1 ILLUMINATED PUSH BUTTON REMAINS LIT IN A POWER FAILURE TO HELP FIND THE DOOR
- 3 & 4 WAY LIGHT SWITCHING CAPABLE
- BUILT-IN DATA PORT FOR REMOTE COMMUNICATION & SYSTEM EXPANSION
- ONE OR TWO COMPARTMENT MONITORING CAPABLE
- ALL 75LC FUNCTIONS ARE AVAILABLE SIMULTANEOUSLY
- PRIVATE LABELING IS AVAILABLE

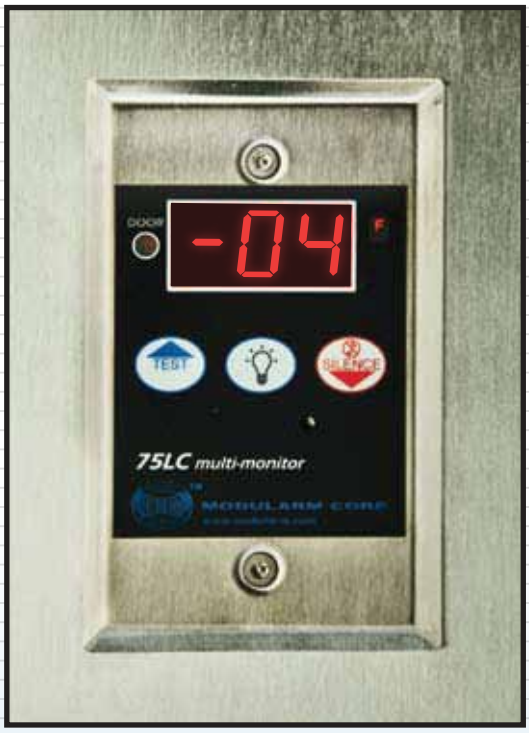

FLUSH MOUNT

SPECIFICATIONS

- DIMENSIONS: SURFACE: 4.5” L x 2.75” W x 2.25” D, FLUSH: ENCLOSURE RECESS - 1.9” D
- TEMPERATURE RANGE: -40°F TO 125°F (-40°C TO 52°C) STANDARD 25’ SENSOR LINE. OTHER LENGTHS AVAILABLE.
- ACCURACY: ± 1°F FROM -25°F TO 70°F (-32°C TO 21°C), ± 2°F FULL RANGE
- ALARM RELAY: N/O & N/C DRY CONTACTS, 1A @ 28VDC, Class 2
- LIGHT RELAY: 8.3A@120VAC, 1000W
- POWER REQUIREMENTS: 120VAC, 30MA

ANOTHER BRIGHT GREEN IDEA FROM MODULARM CORPORATION

WARRANTY STATEMENT

Modularm warrants its products to be free from defects in material and workmanship under normal use and service for a period of one year from the date of the original installation. Any products found to Modularm’s satisfaction to be defective upon examination at Modularm’s factory will at Modularm’s option, be repaired or replaced and returned to purchaser via lowest common carrier. Return of the defective product to Modularm’s plant, freight prepaid, by purchaser, correction of such defect by repair or replacement, and return freight via lowest common carrier, shall constitute full performance by Modularm of its obligations hereunder. Modularm shall have no liability for expenses incurred for repairs made by purchaser except by prior, written authorization. Every claim on account of a breach of warranty shall be made to Modularm in writing within the warranty period specified above – otherwise such claim shall be deemed waived. Modularm shall have no warranty obligation whatsoever if the product has been subjected to alteration, misuse, negligence, corrosive atmosphere, accident, or if operation is contrary to Modularm’s instructions or applicable laws, regulations, code or industry practice. NO OTHER WARRANTY EXPRESSED OR IMPLIED, WHETHER OF FITNESS OR MERCHANTABILITY OR OF ANY OTHER KIND SHALL EXIST IN RESPECT TO MODULARM’S PRODUCTS. Under no circumstances shall Modularm be liable for any loss, damage, cost of repair, installation or reinstallation, or consequential damages of any kind in connection with the use, sale or repair of any products purchased from Modularm.

Copyright 2009, Modularm Corporation
Protected under US patents #6401466 & #7145463
Other patents pending

MODULARM CORPORATION
61 Mall Drive, Commack, NY 11725 • PH: 631.864.3860 • FX:631:864.3863

MODULARM CORPORATION

61 Mall Drive, Commack, NY 11725, Tel 631.864.3860 Fax 631.864.3863

Web: www.modularm.com Email: sales@modularm.com

MODEL 75 LC MULTI-MONITOR FEATURE DETAILS

This document is provided to offer more detailed information on certain features of the Model 75LC:

- **Patented Autoset Technology – Autoset** lets the 75LC select the correct alarm temperature setpoints for a cooler or a freezer **automatically**, virtually eliminating the need for manual programming. Common **cooler** and **freezer** setpoints are pre-loaded into the 75LC. The cooler setpoints are the default settings, used if the monitored compartment is a cooler. If the compartment is a freezer, **Autoset** detects the lower compartment temperature and the 75LC **automatically** changes to the freezer setpoints. (Freezer setpoints won't revert to cooler setpoints if the temperature rises.) Cooler defaults can be easily restored manually when necessary, and a faceplate accessible password protected programming menu allows for customized settings.

- **Timed Light Control, including Auto Panic** - The 75LC offers both timed lighting and timed lighting with Auto Panic. Timed lighting with Auto Panic is the chosen default because we believe it is **the safest mode of operation**. The comparison chart below is provided to better understand the difference between timed lighting operation and timed lighting operation with Auto Panic. Timed lighting operation by a competitor product is also provided for comparison.

Competitor Timed Lighting: (Typically utilizes magnetic contacts to sense door status with 15 minute Energy Act Compliant Timing.)

Open Door - Lights turn on, light timer starts. Lights stay on until timer expires, then lights turn off.

Comments: Possibly not Energy Act compliant. Personnel in the box with the door closed may be "left in the dark" when the timer expires.

Patented 75LC Timed Lighting:(Requires magnetic contacts to sense door status, and IP-1 button **inside** of walk-in.) The light timer is preset for 15 minute Energy Act compliant timing.

Open Door - Lights turn on.

Close Door - Light timer starts, lights stay on while light timer is running. 40 seconds before light timer expires, the IP-1 starts to "beep and blink" to warn personnel that lights will be turning off. Pressing the IP-1 resets and restarts the light timer and keeps lights on. This happens repeatedly. If no one is in the box to press the IP-1, lights turn off when the light timer expires. (**Note 1**: If lights are off, the IP-1 always works as a **"lights on" switch inside of the walk-in**.) (**Note 2**: Press and hold the IP-1 for 2 seconds at any time to generate a manual panic alarm.) (**Note 3**: In coolers, The MD-1 motion detector may be used instead of or in addition to the IP-1. MD-1 activation duplicates an IP-1 press and automates the process.)

Comments: Compliant. Safer than competitor timed lighting because the IP-1 or the MD-1 provides light control, light timer reset and warning that lights will be turning off inside the walk-in.

MODULARM CORPORATION
61 Mall Drive, Commack, NY 11725, Tel 631.864.3860 Fax 631.864.3863
Web: www.modularm.com Email: sales@modularm.com

Patented 75LC Timed Lighting with "Auto Panic": (Requires magnetic contacts to sense door status and IP-1 button **inside** of walk-in.) The light timer is preset for 15 minute Energy Act compliant timing.

Open Door - Lights turn on.

Close Door - Light timer starts, lights stay on while light timer is running. IP-1 starts to beep and blink **immediately** when the door is closed to prompt a button press. Pressing the IP-1 does the following:

1) Stops the light timer and makes lights stay on **indefinitely for as long as the door is closed**.
2) Starts a **built-in 20 minute auto panic timer**.
3) "Locks out" the Light Switch on the 75LC so that someone outside the walk-in can't turn off lights while the box is occupied.

After 20 minutes, the IP-1 starts to beep and blink again for 40 seconds to prompt a "check in" button press. Pressing the IP-1 resets and restarts the Auto Panic timer. This happens repeatedly for as long as someone remains in the box with the door closed. If the IP-1 isn't pressed within 40 seconds, the 75LC **automatically generates a panic alarm ("HLP"** appears on the 75LC display) to let personnel outside the box know that someone may be injured or disabled inside of the walk-in. Opening and closing the door resets all functions. If no one is in the box to press the IP-1, lights turn off when the light timer expires. (**Note 1**: If door is closed and lights are off, the IP-1 always works as a **"lights on" switch inside of the walk-in** and always activates the auto panic timer when pressed.) (**Note 2**: Press and hold the IP-1 for 2 seconds at any time to generate a manual panic alarm.) (**Note 3**: In coolers, The MD-1 motion detector may be used instead of or in addition to the IP-1. MD-1 activation duplicates an IP-1 press and automates the process.)

Comments: Compliant. Our default selected safest mode of operation.

- **Manual Lighting Control** - As an easily selectable alternate mode of operation, the 75LC may be utilized as an **untimed, standard on-off light switch** for applications where timed lighting is not required, thus replacing standard light switches.

- **AC Power Failure Alarm** – The 75LC includes a built-in rechargeable battery with built-in recharging circuitry for on premise and remote notification power failure alarm. The battery backup keeps the system completely operational for up to 10 hours in a power failure, and the **battery backup also keeps the low voltage IP-1 Illuminated Push Button lit so that personnel can find the door if they are inside the walk-in when a power failure occurs.**

Russell

All-Temp²B

Now available with optional ECM Motors

High Efficiency / High Reliability

Low Profile Unit Cooler

Publication No. 100.14
January, 2008

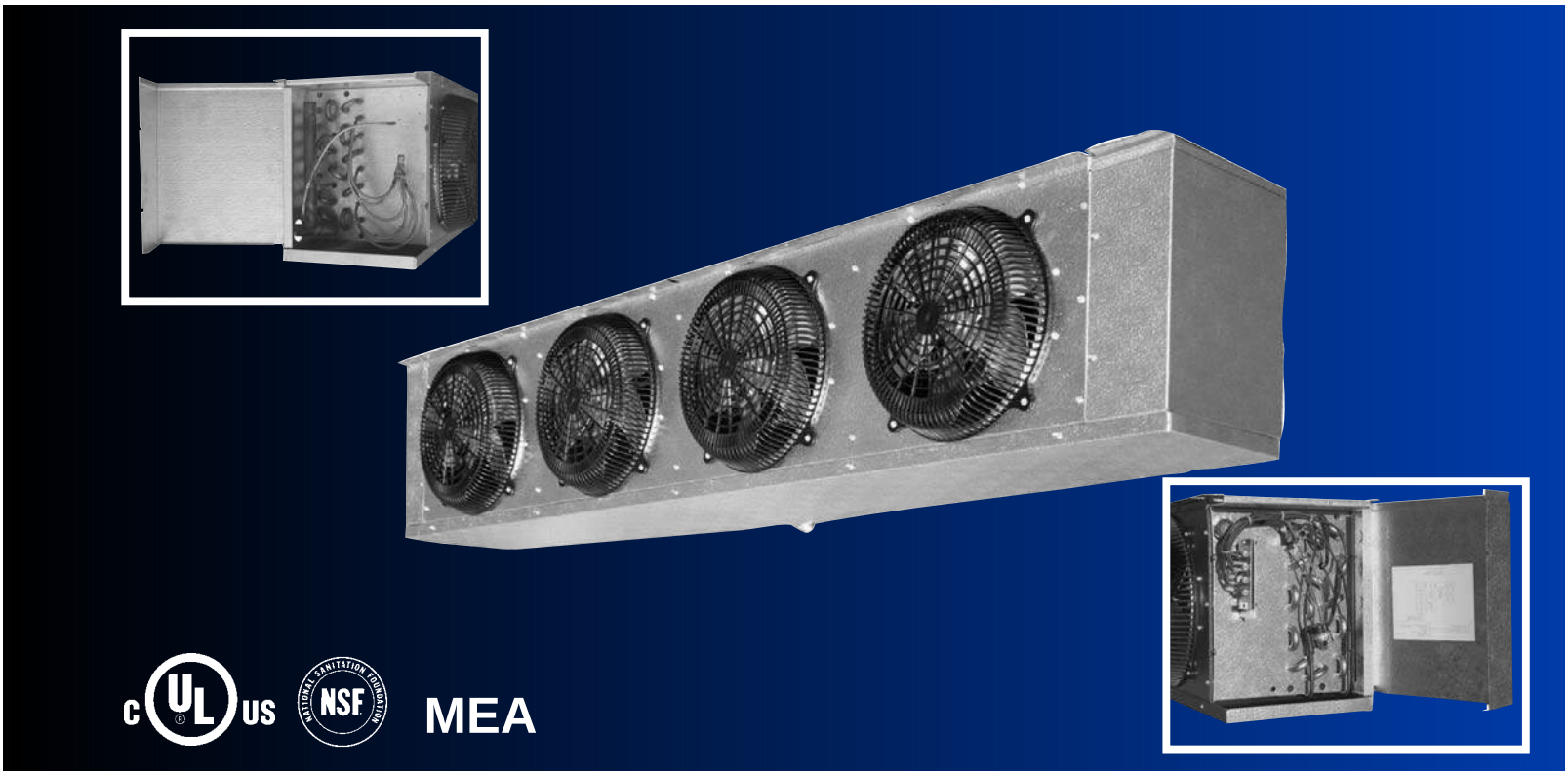

Air Defrost - 3,900 to 39,000 BTUH
Electric Defrost - 3,600 to 28,000 BTUH
Hot Gas Defrost - 3,600 to 28,000 BTUH

Small to Medium Walk - Ins

Coolers & Freezer Applications

Russell

Visit us on the Web: **www.russellcoil.com**
221 S. Berry St., P.O. Box 1030, Brea, CA 92822-1030 • Tel: (714) 529-1935 • Fax: (714) 529-7203

Russell All-Temp²B

Features

The Russell All-Temp²B is the original low profile unit cooler that has established an industry standard as being the all purpose design for walk-in coolers, freezers and other applications. They feature an air draw-through design offering air, electric and hot gas defrost models.

Sizes

There are 35 sizes available with 3,700 to 39,000 BTUH at a 10° TD ranging from 740 to 4,980 cfm. One through six fan models are available.

Housing

Rust-free, heavy gauge, textured Aluminum casing is light weight yet durable. Each fan section is baffled to prevent short cycling of the air. The unit is designed to mount flush to the ceiling and meets all NSF requirements. Slotted hangers are provided for easy installation. Drain fittings are installed in the horizontal position to gain more usable head-room in low ceiling applications. The end panels now are hinged to open up out for easy access to both the piping and electrical ends. Optional expansion valves can be conveniently installed inside the cabinet.

Coil

Seamless Copper tubes are staggered and mechanically expanded into corrugated Aluminum fins and heavy gauge tube sheets to achieve maximum heat transfer and strength. Die formed fin collars provide even fin spacing. Fin spacings available are 4, 6, and 8 fins per inch. Sweat connections are standard on all models and optional field installed flare connection kits are available at no extra charge.

Motors

Standard motors are 1/20 HP, permanently lubricated, ball bearing, with thermal overload protection. Available in 115V, 208/230V and 460V, single phase. Optional high efficiency PSC and ECM motors are available in 115V and 230V.

Fans

Heavy duty 12” Aluminum fans are balanced to provide vibration-free operation. Our new low throw black plastic fan guards have an improved air pattern. The optional epoxy resin high throw fan guard moves air up to 50 feet.

Air Defrost

All models with the prefix “AA” are designed for use in coolers of 35°F and warmer. Complete air defrost systems for off-cycle or timed air defrost are available from Russell.

Electrical

Available in 115V, 208/230V, and 460V (see pages 4 & 5). All components are factory wired to convenient screw-type terminal strips. A large compartment is supplied internal to the unit for all electrical components and is easily accessible by removing the end panel. All models are UL & cUL listed.

Electric Defrost

Available on all models with the prefix “AE”. Designed for use where electric heat is used to defrost. Placement of the heaters internal to the coil allows for an extremely rapid and efficient defrost. This arrangement enables the heat to be conducted through the fins from the center out for an even defrost pattern. All heaters are wired to a terminal strip to allow a quick field change-over from single phase to three phase, 230V to 460V and vice versa. A lower heater is installed close to the drain pan for fast, reliable drainage. A defrost termination thermostat (DT) terminates the defrost cycle when the temperature is satisfied. A heater safety thermostat is installed to prevent heaters from overheating above 75° in case of DT failure. All heaters are flexible and can be easily replaced within 12 inches of the end of the units. A fan delay thermostat is supplied to allow the warm coil to cool after a defrost cycle prior to the fans turning on. Complete electric defrost refrigeration systems are available from Russell.

Hot Gas Defrost

Two types available - Re-Evap models with the prefix “AH” and reverse cycle with the prefix “AG”. All models include a fixed DTFD factory wired and a hot gas drain pan circuit to defrost the drain pan. On all Hot Gas models, the drain fitting is located on the left-hand rear of the unit when facing the fan guards. Re-evap models include a Heat Exchanger-Re-Evaporator shipped together with the unit for field installation. Complete Re-Evap Refrigeration Systems are available from Russell. Contact factory for piping information.

Optional Features

- High efficiency PSC or ECM fan motors
- Coated Aluminum fins or Copper Fins
- Baked white enamel housing
- Epoxy resin high throw guards for up to 50 ft.
- Reheat kits (not UL listed)
- Factory mounted expansion valves

All-Temp²B

RUSSELL's optional **ECM motors**
bring the benefits inherent to unit bearing motor design
to the refrigeration Unit Cooler market.

- **Large oil resevoir**
- Totally enclosed construction
- **Journal bearing machined into the cast iron endbell**
- Spiral grooved shaft pump **guarantees** positive oil circulation
- **Threaded shaft uses hubless fan blade.**

Energy Savings per Motor

by Changing to More Efficient Unit Cooler Motors (baseded on Energy Cost of $0.10 per kWh)

Motor Change	Std Motor Power Watts/Mtr	Change to Motor Power Watts/Mtr	Reduced Power Watts/Mtr	Run Time Hrs/ Day	Motor Energy Savings kWh/Yr	Motor Energy Savings $/Yr	Reduced Box Load MBTU/Yr	Cond. Unit Energy Savings $/Yr	Yearly Saving $ **Per MTR**	Pay back in Yrs
SP to PSC	120	85	35	22	281	28	959	18	**47**	0.6
PSC to EC	85	47	38	22	305	31	1041	20	**51**	2
SP to EC	**120**	**47**	**73**	**22**	**586**	**59**	**2000**	**38**	**97**	**1.3**

Subtract 6% from total savings for medium temperature air defrost units that run 24 hours per day.
SP = 1/20 HP Shaded pole motor (Standard motors)
PSC = 1/20 HP PSC motor (Optional motors available at additional cost)
ECM = 50 Watt Electronically Commutated motor (Optional motors available at additional cost)

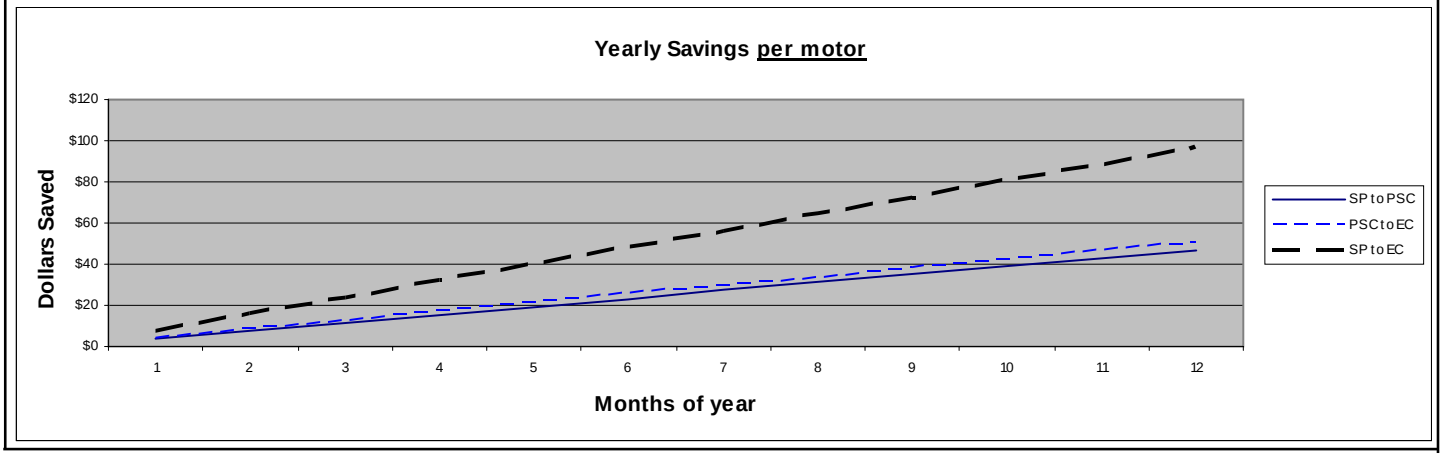

Nomenclature

A A 1 8 - 41 B - A

- **A** — All-Temp²B
- **A** — **Type of Defrost**
  - A = Air Defrost
  - E = Electric Defrost
  - H = Hot Gas Re-evap
  - G = Hot Gas Rev. Cycle
- **1** — Number of fans
- **8** — Fins per inch
- **41** — BTUH in hundreds
- **B** — Revision Code
- **A** — Voltage Code
  - A = 115V
  - B = 208/1/60
  - C = 230/1/60
  - D = 208-230/1/60
  - E = 208-230/3/60
  - F = 460/1/60

Air Defrost / Specifications

	Model Number	BTUH Capacity @ 25°F S.T. 10° TD	BTUH Capacity @ 25°F S.T. 12° TD	CFM	Total Fan Motor AMPS - 1 Phase: Standard Motor 115V	Standard Motor 230V	Standard Motor 460V	Optional PSC Motor 115V	Optional PSC Motor 230V	Optional ECM Motor 115V	Optional ECM Motor 230V
8 FPI	AA18-41B	4,100	4,900	800	2.0	1.0	0.5	1.0	0.5	0.9	0.45
	AA18-53B	5,300	6,400	770	2.0	1.0	0.5	1.0	0.5	0.9	0.45
	AA18-66B	6,600	7,900	740	2.0	1.0	0.5	1.0	0.5	0.9	0.45
	AA28-76B	7,600	9,100	1,460	4.0	2.0	1.0	2.0	1.0	1.8	0.90
	AA28-97B	9,700	11,600	1,420	4.0	2.0	1.0	2.0	1.0	1.8	0.90
	AA28-106B	10,600	12,700	1,540	4.0	2.0	1.0	2.0	1.0	1.8	0.90
	AA28-122B	12,200	14,600	1,380	4.0	2.0	1.0	2.0	1.0	1.8	0.90
	AA28-134B	13,400	16,100	1,480	4.0	2.0	1.0	2.0	1.0	1.8	0.90
	AA38-160B	16,000	19,200	2,310	6.0	3.0	1.5	3.0	1.5	2.7	1.35
	AA38-195B	19,500	23,400	2,220	6.0	3.0	1.5	3.0	1.5	2.7	1.35
	AA48-212B	21,200	25,400	3,080	8.0	4.0	2.0	4.0	2.0	3.6	1.80
	AA48-264B	26,400	31,700	2,960	8.0	4.0	2.0	4.0	2.0	3.6	1.80
	AA58-275B	27,500	33,000	3,850	10.0	5.0	2.5	5.0	2.5	4.5	2.25
	AA68-318B	31,800	38,200	4,620	12.0	6.0	3.0	6.0	3.0	5.4	2.70
	AA68-390B	39,000	46,800	4,440	12.0	6.0	3.0	6.0	3.0	5.4	2.70
6 FPI	AA16-39B	3,900	4,700	830	2.0	1.0	0.5	1.0	0.5	0.9	0.45
	AA16-48B	4,800	5,800	800	2.0	1.0	0.5	1.0	0.5	0.9	0.45
	AA16-58B	5,800	7,000	780	2.0	1.0	0.5	1.0	0.5	0.9	0.45
	AA26-70B	7,000	8,400	1,540	4.0	2.0	1.0	2.0	1.0	1.8	0.90
	AA26-87B	8,700	10,400	1,500	4.0	2.0	1.0	2.0	1.0	1.8	0.90
	AA26-115B	11,500	13,800	1,560	4.0	2.0	1.0	2.0	1.0	1.8	0.90
	AA36-145B	14,500	17,400	2,400	6.0	3.0	1.5	3.0	1.5	2.7	1.35
	AA36-170B	17,000	20,400	2,340	6.0	3.0	1.5	3.0	1.5	2.7	1.35
	AA46-192B	19,200	23,000	3,200	8.0	4.0	2.0	4.0	2.0	3.6	1.80
	AA46-230B	23,000	27,600	3,120	8.0	4.0	2.0	4.0	2.0	3.6	1.80
	AA56-245B	24,500	29,400	4,000	10.0	5.0	2.5	5.0	2.5	4.5	2.25
	AA66-295B	29,500	35,400	4,800	12.0	6.0	3.0	6.0	3.0	5.4	2.70
	AA66-345B	34,500	41,400	4,680	12.0	6.0	3.0	6.0	3.0	5.4	2.70
4 FPI	AA14-42B	4,200	5,000	830	2.0	1.0	0.5	1.0	0.5	0.9	0.45
	AA24-84B	8,400	10,100	1,660	4.0	2.0	1.0	2.0	1.0	1.8	0.90
	AA24-105B	10,500	12,600	1,620	4.0	2.0	1.0	2.0	1.0	1.8	0.90
	AA34-130B	13,000	15,600	2,490	6.0	3.0	1.5	3.0	1.5	2.7	1.35
	AA44-170B	17,000	20,400	3,320	8.0	4.0	2.0	4.0	2.0	3.6	1.80
	AA54-215B	21,500	25,800	4,150	10.0	5.0	2.5	5.0	2.5	4.5	2.25
	AA64-255B	25,500	30,600	4,980	12.0	6.0	3.0	6.0	3.0	5.4	2.70

(1) All fan motors are wired for single phase. Standard motors are shaded pole. High efficiency PSC motors (Permanent Split Capacitor) and ECM (Electronically Commutated) motors are optional.

Ordering Information Required

It is vital that the information listed below is given with each evaporator order. Orders without this information may be delayed. Evaporators with options such as solenoid and expansion valves will not be processed until all the required information is given.

(1) Model Number

(2) Type of Motor

(3) Voltage, frequency and phase of motors and heaters (when applicable)

(4) Refrigerant type

(5) Evaporator temperature

(6) Evaporator T.D.

Electric Defrost / Specifications

	Model Number	BTUH Capacity @ 10° T.D. Evaporator Temperature -30°	-20°	-10°	+20°	CFM	Motor Amps¹ Standard 230V	Standard 460V	PSC 230V	ECM 230V	Heater Amps² 208/230V 1 PH	208/230V 3 PH	460V 1 PH	Watts
6 FPI	AE16-36B	3,400	3,600	3,700	3,900	830	1	0.5	0.5	0.45	4.4	2.6	2.2	1,000
	AE16-41B	3,900	4,100	4,300	4,800	800	1	0.5	0.5	0.45	4.4	2.6	2.2	1,000
	AE16-46B	4,400	4,600	4,800	5,800	780	1	0.5	0.5	0.45	4.4	2.6	2.2	1,000
	AE26-60B	5,700	6,000	6,200	7,000	1,540	2	1	1	0.90	7	6	3.5	1,600
	AE26-75B	7,100	7,500	7,800	8,700	1,500	2	1	1	0.90	7	6	3.5	1,600
	AE26-92B	8,700	9,200	9,600	11,500	1,560	2	1	1	0.90	8.7	7.5	4.4	2,000
	AE36-120B	11,400	12,000	12,500	14,500	2,400	3	1.5	1.5	1.35	13	11.3	6.4	3,000
	AE36-140B	13,300	14,000	14,600	17,000	2,340	3	1.5	1.5	1.35	13	11.3	6.4	3,000
	AE46-164B	15,000	16,400	17,100	19,200	3,200	4	2	2	1.80	17.4	15.1	8.7	4,000
	AE46-185B	17,600	18,500	19,200	23,000	3,120	4	2	2	1.80	17.4	15.1	8.7	4,000
	AE56-210B	20,000	21,000	21,800	24,500	4,000	5	2.5	2.5	2.25	—	18.8	10.9	5,000
	AE66-245B	23,300	24,500	25,500	29,500	4,800	6	3	3	2.70	—	22.6	13	6,000
	AE66-280B	26,600	28,000	29,100	34,500	4,680	6	3	3	2.70	—	22.6	13	6,000
4 FPI	AE14-37B	3,500	3,700	3,800	4,200	830	1	0.5	0.5	0.45	4.4	2.6	2.2	1,000
	AE24-72B	6,800	7,200	7,500	8,400	1,660	2	1	1	0.90	8.7	7.5	4.4	2,000
	AE24-85B	8,100	8,500	8,800	10,500	1,620	2	1	1	0.90	8.7	7.5	4.4	2,000
	AE34-105B	10,000	10,500	10,900	13,000	2,490	3	1.5	1.5	1.35	13	11.3	6.4	3,000
	AE44-140B	13,300	14,000	14,600	17,000	3,320	4	2	2	1.80	17.4	15.1	8.7	4,000
	AE54-180B	17,100	18,000	18,700	21,500	4,150	5	2.5	2.5	2.25	—	18.8	10.9	5,000
	AE64-215B	20,400	21,500	22,400	25,500	4,980	6	3	3	2.70	—	22.6	13	6,000

(1) All fan motors are wired for single phase. Standard motors are shaded pole. High efficiency PSC (Permanent Split Capacitor) & ECM (Electronically commutated) motors are optional.

(2) For 208/230 volt models, heaters are wired as standard for single phase on 1 through 4 fan models. 5 and 6 fan models are wired 3 phase. 460 Volt models are only available in single phase and are compatible with all 3 phase systems.

Hot Gas Defrost / Specifications

	Model Number Re-Evap	Rev. Cycle	BTUH Capacity @ 10° T.D. Evaporator Temperature -30°	-20°	-10°	+20°	CFM	Fan Motor Amps¹ Standard 115V	Standard 230V	Standard 460V	PSC 115V	PSC 230V	ECM 115V	ECM 230V	Re-Evap HEA
6 FPI	AH16-36B	AG16-36B	3,400	3,600	3,700	3,900	830	2	1	0.5	1	0.5	0.9	0.45	1A
	AH16-41B	AG16-41B	3,900	4,100	4,300	4,800	800	2	1	0.5	1	0.5	0.9	0.45	1A
	AH16-46B	AG16-46B	4,400	4,600	4,800	5,800	780	2	1	0.5	1	0.5	0.9	0.45	1A
	AH26-60B	AG26-60B	5,700	6,000	6,200	7,000	1,540	4	2	1	2	1	1.8	0.90	2A
	AH26-75B	AG26-75B	7,100	7,500	7,800	8,700	1,500	4	2	1	2	1	1.8	0.90	2A
	AH26-92B	AG26-92B	8,700	9,200	9,600	11,500	1,560	4	2	1	2	1	1.8	0.90	2A
	AH36-120B	AG36-120B	11,400	12,000	12,500	14,500	2,400	6	3	1.5	3	1.5	2.7	1.35	3A
	AH36-140B	AG36-140B	13,300	14,000	14,600	17,000	2,340	6	3	1.5	3	1.5	2.7	1.35	3A
	AH46-164B	AG46-164B	15,000	16,400	17,100	19,200	3,200	8	4	2	4	2	3.6	1.80	3A
	AH46-185B	AG46-185B	17,600	18,500	19,200	23,000	3,120	8	4	2	4	2	3.6	1.80	3A
	AH56-210B	AG56-210B	20,000	21,000	21,800	24,500	4,000	10	5	2.5	5	2.5	4.5	2.25	3A
	AH66-245B	AG66-245B	23,300	24,500	25,500	29,500	4,800	12	6	3	6	3	5.4	2.70	4A
	AH66-280B	AG66-280B	26,600	28,000	29,100	34,500	4,680	12	6	3	6	3	5.4	2.70	4A
4 FPI	AH14-37B	AG14-37B	3,500	3,700	3,800	4,200	830	2	1	0.5	1	0.5	0.9	0.45	1A
	AH24-72B	AG24-72B	6,800	7,200	7,500	8,400	1,660	4	2	1	2	1	1.8	0.90	2A
	AH24-85B	AG24-85B	8,100	8,500	8,800	10,500	1,620	4	2	1	2	1	1.8	0.90	2A
	AH34-105B	AG34-105B	10,000	10,500	10,900	13,000	2,490	6	3	1.5	3	1.5	2.7	1.35	2A
	AH44-140B	AG44-140B	13,300	14,000	14,600	17,000	3,320	8	4	2	4	2	3.6	1.80	3A
	AH54-180B	AG54-180B	17,100	18,000	18,700	21,500	4,150	10	5	2.5	5	2.5	4.5	2.25	3A
	AH64-215B	AG64-215B	20,400	21,500	22,400	25,500	4,980	12	6	3	6	3	5.4	2.70	3A

(1) All fan motors are wired for single phase operation

Physical Data

Models		TXV TYPE	Refrigerant Connections				No. of Hangers	Dimensions (Inches)				Ship Wt. (lbs.)
AA	AE/AH/AG		All Liquid†	AA Suction	AE/AH/AG Suction	HG‡		A	B	C	W	
18-41B	—	EXT	1/2 ODS	5/8 ODS	—	—	2	19	—	—	27½	33
18-53B	—	EXT	1/2	5/8	—	—	2	19	—	—	27½	34
18-66B	—	EXT	1/2	5/8	—	—	2	19	—	—	27½	36
28-76B	—	EXT	1/2	5/8	—	—	2	33	—	—	41½	48
28-97B	—	EXT	1/2	7/8	—	—	2	33	—	—	41½	51
28-106B	—	EXT	1/2	7/8	—	—	2	37	—	—	45½	58
28-122B	—	EXT	1/2	7/8	—	—	2	33	—	—	41½	60
28-134B	—	EXT	1/2	7/8	—	—	2	37	—	—	45½	63
38-160B	—	EXT	1/2	1-1/8	—	—	2	55	—	—	63½	79
38-195B	—	EXT	1/2	1-1/8	—	—	2	55	—	—	63½	84
48-212B	—	EXT	1/2	1-1/8	—	—	3	36½	36½	—	81½	254
48-264B	—	EXT	1/2	1-1/8	—	—	3	36½	36½	—	81½	262
58-275B	—	EXT	1/2	1-1/8	—	—	3	54½	36½	—	99½	312
68-318B	—	EXT	1/2	1-1/8	—	—	4	36½	36	36½	117½	354
68-390B	—	EXT	1/2	1-1/8	—	—	4	36½	36	36½	117½	370
16-39B	16-36B	EXT	1/2 ODS	5/8 ODS	5/8 ODS	5/8 ODS	2	19	—	—	27½	41
16-48B	16-41B	EXT	1/2	5/8	5/8	5/8	2	19	—	—	27½	44
16-58B	16-46B	EXT	1/2	5/8	5/8	5/8	2	19	—	—	27½	47
26-70B	26-60B	EXT	1/2	5/8	7/8	5/8	2	33	—	—	41½	54
26-87B	26-75B	EXT	1/2	7/8	7/8	5/8	2	33	—	—	41½	55
26-115B	26-92B	EXT	1/2	7/8	7/8	5/8	2	37	—	—	45½	62
36-145B	36-120B	EXT	1/2	7/8	7/8	5/8	2	55	—	—	63½	78
36-170B	36-140B	EXT	1/2	1-1/8	1-1/8	5/8	2	55	—	—	63½	85
46-192B	46-164B	EXT	1/2	1-1/8	1-1/8	5/8	3	36½	36½	—	81½	255
46-230B	46-185B	EXT	1/2	1-1/8	1-1/8	5/8	3	36½	36½	—	81½	265
56-245B	56-210B	EXT	1/2	1-1/8	1-1/8	5/8	3	54½	36½	—	99½	306
66-295B	66-245B	EXT	1/2	1-1/8	1-1/8	5/8	4	36½	36	36½	117½	353
66-345B	66-280B	EXT	1/2	1-1/8	1-1/8	5/8	4	36½	36	36½	117½	368
14-42B	14-37B	EXT	1/2 ODS	5/8 ODS	5/8 ODS	5/8 ODS	2	19	—	—	27½	42
24-84B	24-72B	EXT	1/2	7/8	7/8	5/8	2	37	—	—	45½	49
24-105B	24-85B	EXT	1/2	7/8	7/8	5/8	2	37	—	—	45½	55
34-130B	34-105B	EXT	1/2	7/8	7/8	5/8	2	55	—	—	63½	79
44-170B	44-140B	EXT	1/2	7/8	1-1/8	5/8	3	36½	36½	—	81½	251
54-215B	54-180B	EXT	1/2	1-1/8	1-1/8	5/8	3	54½	36½	—	99½	299
64-255B	64-215B	EXT	1/2	1-1/8	1-1/8	5/8	4	36½	36	36½	117½	340

† Optional Extended Flare Kit available upon request for field installation.
‡ Hot Gas connections only apply to the AH models.

Installation Notes:
(1) Install 12” away from back wall.
(2) Drain connection on AA and AE units are centered on drain pan; and on the left end (facing air discharge) on AH and AG units.
(3) For long air throw requirements, specify high throw fan guard.
(4) Unit height at drain end of hot gas models is as follows: 1,2, and 3 fan models = 15-7/8”, 4,5, and 6 fan models = 16-1/4”.

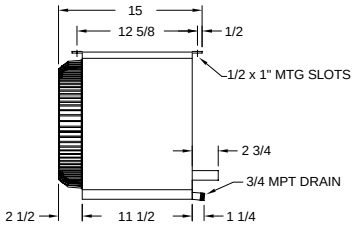

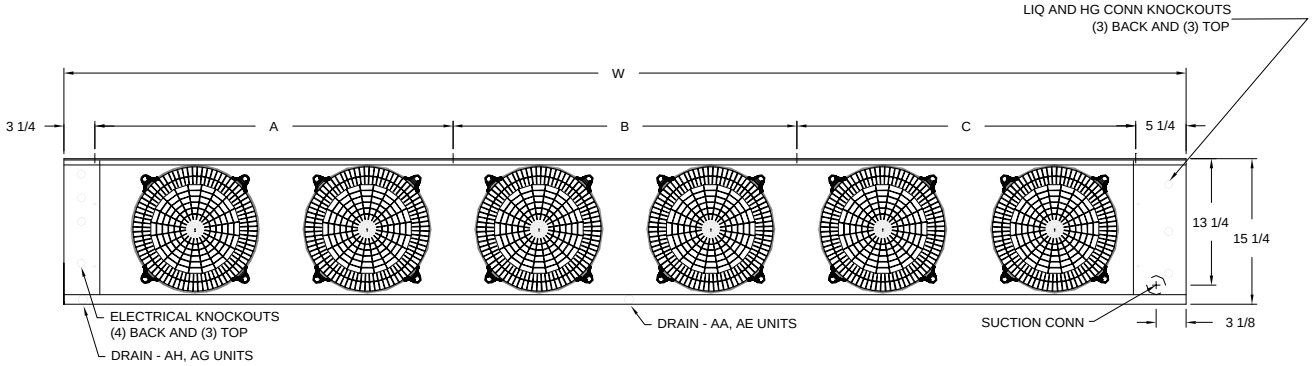

Electric Defrost Kits

Model Number	1 Unit Cooler Per System		2 Unit Coolers Per System		3 Unit Coolers Per System	
	230V	460V	230V	460V	230V	460V
AE16-36B	ED-10	ED-12	ED-20*	ED-22	ED-30	ED-32
AE16-41B	ED-10	ED-12	ED-20*	ED-22	ED-30	ED-32
AE16-46B	ED-10	ED-12	ED-20*	ED-22	ED-30	ED-32
AE26-60B	ED-10	ED-12	ED-20*	ED-22	ED-30	ED-32
AE26-75B	ED-10	ED-12	ED-20*	ED-22	ED-30	ED-32
AE26-92B	ED-10	ED-12	ED-20*	ED-22	ED-30	ED-32
AE36-120B	ED-10	ED-12	ED-20*	ED-22	ED-33	ED-32
AE36-140B	ED-10	ED-12	ED-20*	ED-22	ED-33	ED-32
AE46-164B	ED-10	ED-12	ED-23*	ED-22	ED-35	ED-32
AE46-185B	ED-10	ED-12	ED-23*	ED-22	ED-35	ED-32
AE56-210B	ED-11	ED-12	ED-23*	ED-22	ED-35	ED-34
AE66-245B	ED-11	ED-12	ED-23*	ED-22	ED-35	ED-34
AE66-280B	ED-11	ED-12	ED-23*	ED-22	ED-35	ED-34
AE14-37B	ED-10	ED-12	ED-20*	ED-22	ED-30	ED-32
AE24-72B	ED-10	ED-12	ED-20*	ED-22	ED-30	ED-32
AE24-85B	ED-10	ED-12	ED-20*	ED-22	ED-30	ED-32
AE34-105B	ED-10	ED-12	ED-20*	ED-22	ED-33	ED-32
AE44-140B	ED-10	ED-12	ED-23*	ED-22	ED-35	ED-32
AE54-180B	ED-11	ED-12	ED-23*	ED-22	ED-35	ED-34
AE64-215B	ED-11	ED-12	ED-23*	ED-22	ED-35	ED-34

Electric defrost kits consist of components that are necessary to control the defrost cycle. The optional kits are available as a factory installed option when ordered with a condensing unit. Not all Ed-Kits are available for all condensing unit models. The contents of each kit is described below, along with the function of each component.

* - 1/2 through 3 HP models require ED-210 or ED-213.

Electric Defrost Kits

KIT NO.	TIMER	AUXILIARY SWITCH	BLOCK-OUT RELAY	DEFROST CONTACTOR	FAN CONTACTOR	SEQUENCING RELAY
ED10-230/1	1	—	1-30A	—	—	—
ED11-230/3	1	1	—	1-30A	—	—
ED12-460/3	1	1	—	1-30A	1-25A	—
[1]ED210-230/1	1	—	1-30A	—	—	—
[1]ED213-230/1	1	1	—	1-50A	—	—
[1]ED213-230/3	1	1	—	1-50A	—	—
ED20-230/1	1	—	1-30A	—	—	2
ED22-460/3	1	1	—	2-15A	1-25A	2
ED23-230/1	1	1	—	2-25A	—	2
ED23-230/3	1	1	—	2-25A	—	2
ED30-230/1	1	—	1-30A	—	—	3
ED32-460/3	1	1	—	3-10A	1-25A	3
ED33-230/1	1	1	—	3-16A	—	3
ED34-460/3	1	1	—	3-16A	1-25A	3
ED35-230/1	1	1	—	3-33A	—	3
ED35-230/3	1	1	—	3-33A	—	3

Timer: Initiates the defrost cycle. Also used as a override protection for defrost termination.

Auxiliary Switch: Is mounted on the compressor contactor and prevents the defrost contactor from operating whenever the compressor is energized.

Block-Out Relay: Serves the same function as auxiliary switch. Used when defrost contactor is not required (lower wattage single phase only).

Defrost Contactor: Carries amperage load for heaters.

Fan Contactor: Used with 460V motors or when 230V motors are wired 3 phase.

Sequencing Relays: Provides interconnection of multiple unit coolers on a single system so that each unit cooler is allowed to individually terminate defrost on temperature.

[1] For use with 2 evaporators , 1/2 through 3 HP R-series systems ONLY!

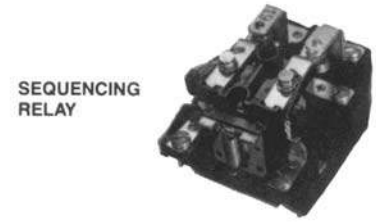

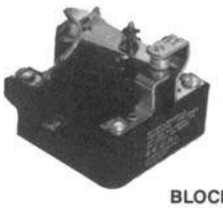







Russell All-Temp²B

1/2 Through 80 HP

COMPLETE REFRIGERATION PACKAGES

- AIR DEFROST
- ELECTRIC DEFROST
- HOT GAS DEFROST
- RUSSAVER
- SIERRA
- HIGH SIERRA

CONTACT YOUR RUSSELL REPRESENATIVE FOR DETAILS

All-Temp²B
Low Profile Unit coolers



Inter-Temp
Medium Profile Unit Coolers



Ultra-Temp
High Capacity Warehouse Unit Coolers

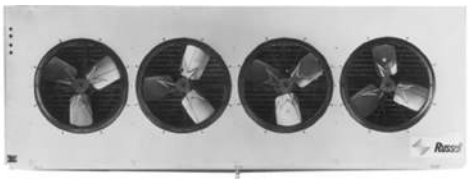

MiniCon
Cond. units 1/2 - 6 HP



D-Series
Condensing Units 3-22 HP



V-Series
Condensing Units 20-30 HP

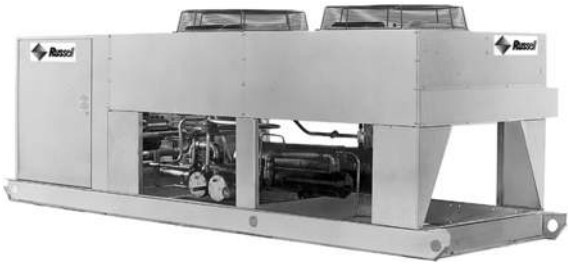

Russell

Visit us on the Web: **www.russellcoil.com**
221 S. Berry St., P.O. Box 1030, Brea, CA 92822-1030 • Tel: (714) 529-1935 • Fax: (714) 529-7203

PENTAIR

Raychem GARDIAN
PREASSEMBLED HEATING CABLE

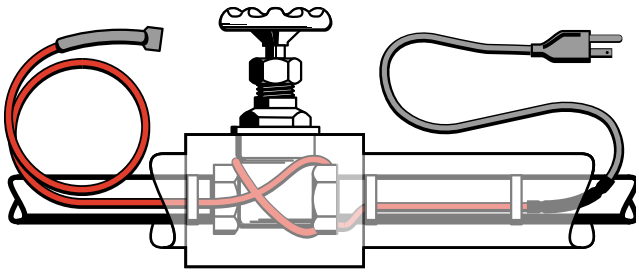

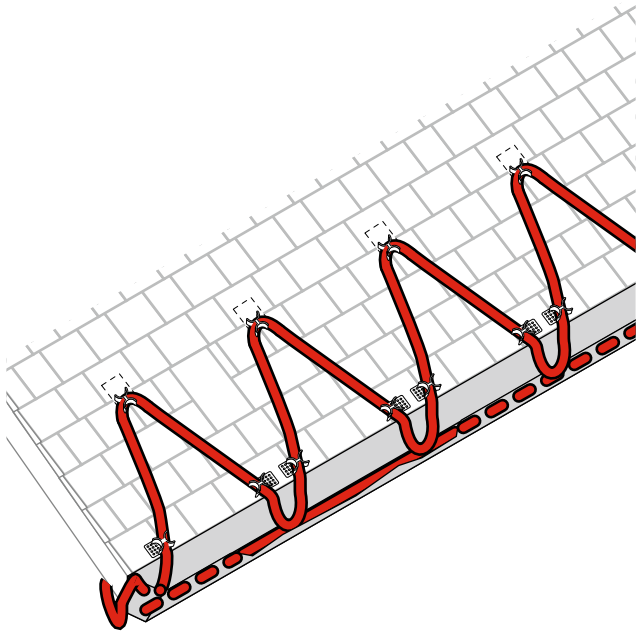

PRODUCT OVERVIEW

Raychem Gardian pre-assembled self-regulating heating cables are designed for residential and commercial metal and plastic pipe freeze protection and roof and gutter de-icing applications. 120 V Gardian cables are available in 6, 12, 18, 24, 50, 75 and 100 foot lengths, and each comes assembled with a 30-inch power cord and plug. 120 V Gardian cables are ideal for smaller jobs such as roof and gutter de-icing on porches and overhangs, as well as for pipe freeze protection on pipes up to 2-½ inches in diameter.

240 V Gardian cables are available in 6, 12, 18, and 24 foot lengths and each come assembled with a 30-inch power cord for terminating in a junction box. Due to their short lengths, 240 V Gardian cables are designed only for pipe freeze protection applications on pipes up to 2-½ inches in diameter.

GARDIAN PREASSEMBLED HEATING CABLE SPECIFICATIONS

Catalog number	W51-6P	W52-6L
	W51-12P	W52-12L
	W51-18P	W52-18L
	W51-24P	W52-24L
	W51-50P	
	W51-75P	
	W51-100P	
Service voltage	120 V	208-240 V
Application	Pipe freeze protection and roof and gutter de-icing	Pipe freeze protection
Nominal power output on pipes at 40°F (W/ft)	6	6

GARDIAN

GARDIAN PREASSEMBLED HEATING CABLE SPECIFICATIONS

Nominal power output in ice or snow at 32°F (W/ft)	8	N/A
Maximum cable width (in)	0.45	0.45
Maximum cable thickness (in)	0.24	0.24
Maximum exposure temperature (°F)	150	150
Maximum bend radius	5/8 in (16 mm)	5/8 in (16 mm)

APPROVALS

-WS -W

GROUND-FAULT PROTECTION

To minimize the danger of fire from sustained electrical arcing if the heating cable is damaged or improperly installed, and to comply with the requirements of Pentair Thermal Management, agency certifications, and national electrical codes, 30-mA equipment or 5-mA personnel ground-fault protection must be used on each Gardian heating cable branch circuit. Arcing may not be stopped by conventional circuit protection.

NOMINAL POWER TEMPERATURE CURVE FOR PIPES

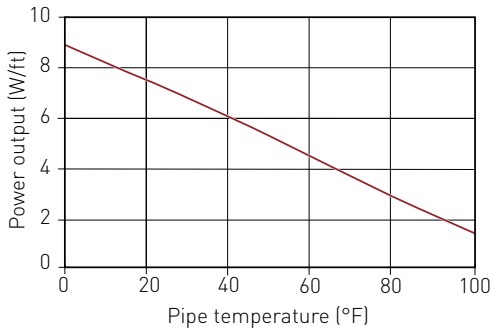

PRODUCT SELECTION

Pipe freeze protection

Use the tables to the right to select the correct heating cable length. Add 1 foot to the pipe length for each valve or spigot in the pipe system.

Table 1 Metal Pipes

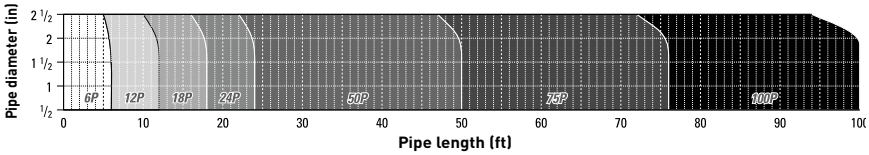

Table 2 Plastic Pipes

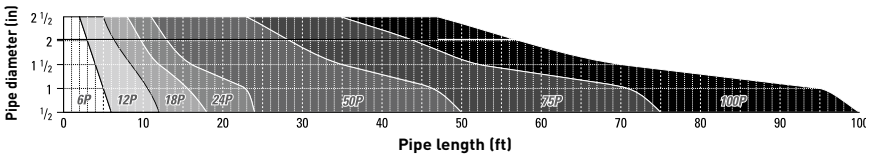

Add 1 foot to the pipe length for each valve or spigot in the pipe system.

ROOF AND GUTTER DE-ICING

Find the number of feet of heating cable needed per foot of roof edge in table to the right. Then, calculate the amount of total heating cable length you need using the following formula:

Length = **A + B + C + D**

A Roof edge length (ft) x Feet of heating cable per foot of roof edge

B Roof edge (ft) x 0.5*

C Total gutter length (ft)

D Total downspout length (ft) + 1 (ft)

= Total heating cable length (ft)

*Roof extension: This length allows the heating cable to extend into the gutter to provide a continuous drain path, or where no gutters are present, extends beyond the roof edge to form a drip loop.

Length of Cable Per Foot of Roof Edge (ft)

		Standing Seam Metal Roof	
Overhang (in)	**Standard Roof**	**18 inch Seam**	**24 inch Seam**
None*	2	2.5	2
12 in	2.8	2.8	2.4
24 in	3.8	3.6	2.9
36 in	4.8	4.3	3.6

* Gutter required

Note: Pentair Thermal Management recommends a gutter and downspouts to provide a continuous path for melted water.

- If downspout is in the middle of the run, loop the Gardian down and back up. Double the length of the downspout for determining the length of Gardian to install.
- For valleys, run the heating cable two thirds of the way up and down the valley.
- For gutters 5-6 inches wide use 2 runs of heating cable.
- For gutters wider than 6 inches contact Pentair Thermal Management, (800) 545-6258.

Item # _____

Job _____

SUPER ADJUSTABLE™ SUPER ERECTA SHELF®
WIRE SHELVING

Super Adjustable™ Super Erecta Wire Shelving is the most advanced and innovative wire storage system available.

- **Maximum Space Utilization:** The Corner Release System encourages repositioning of shelves during initial assembly to reclaim wasted vertical space. In some cases, reclaimed vertical space will allow an extra shelving tier to be added to the storage unit resulting in a 25% increase in storage capacity!
- **Easily Assembled:** The unique Corner Release System enables quick and easy repositioning of shelves during the initial set up to accommodate different package or container sizes. "Total Assembly" is complete only after the shelves are properly spaced to maximize storage. SiteSelect™ Posts, with the double-groove visual guide feature, have circular grooves at 1" (25mm) increments and are numbered at 2" (51mm) intervals to easily identify proper shelf locations.
- **Easily Adjustable:** The unique shelf design and SiteSelect™ Posts enable "tool-free", quick adjustment at 1" (25mm) increments along the entire height of the post.
- **Improved Rigidity:** An enhanced Corner Release System has made Super Adjustable™ the most rigid, easily adjustable shelving system ever.
- **Strong:** Super Adjustable™ shelves hold as much weight as traditional Super Erecta wire shelving. Stationary units hold a maximum of 2,000 lb. (910kg). Maximum weight capacity per shelf (48" [1219mm] or shorter = 800 lb. [364kg]; longer than 48" [1219mm] = 600 lb. [273kg])
- **Choice of Finishes:** Super Adjustable™ Super Erecta shelving is available in a variety of finishes: chrome-plated for dry storage; Metroseal 3™ with antimicrobial product protection and Type 304 stainless steel for corrosive environments.
- **Accessories:** Compatible with the entire system of Super Erecta shelves and accessories. See Catalog Sheets 10.04, 10.05, 10.06 for more information.



Dry Storage — Chrome

NSF



Corner Release System

Super Adjustable™ Advantage . . .



Easy "no tool" shelf adjustment

1" 25mm spacing minimizes dead space

Efficient use of space allows more storage levels to be added.

Storage efficiency can increase by 25% or more!



*MICROBAN® and the MICROBAN® symbol are registered trademarks of the Microban Products Company, Huntersville, NC.

InterMetro Industries Corporation
North Washington Street
Wilkes-Barre, PA 18705
www.metro.com

10.01A

Job _____

SUPER ADJUSTABLE™ SUPER ERECTA SHELF®
WIRE SHELVING

Dimensions

Super Adjustable™ Super Erecta Wire Shelving

Model No. Chrome	Model No. Metroseal 3	Model No. Stainless	Shelf Width/Length (in.)	(mm)	Approx. Pkd. Wt. (lbs.)	(kg)
A1424NC	A1424NK3	A1424NS	14x24	355x610	6	2.7
A1430NC	A1430NK3	A1430NS	14x30	355x760	7	3.2
A1436NC	A1436NK3	A1436NS	14x36	355x914	8	3.6
A1442NC	A1442NK3	A1442NS	14x42	355x1066	9 1/2	4.3
A1448NC	A1448NK3	A1448NS	14x48	355x1219	10 1/2	4.7
A1460NC	A1460NK3	A1460NS	14x60	355x1524	14	6.3
A1472NC	A1472NK3	A1472NS	14x72	355x1829	17	7.7
A1824NC	A1824NK3	A1824NS	18x24	457x610	7	3.2
A1830NC	A1830NK3	A1830NS	18x30	457x760	8	3.6
A1836NC	A1836NK3	A1836NS	18x36	457x914	9 1/2	4.3
A1842NC	A1842NK3	A1842NS	18x42	457x1066	11	5.0
A1848NC	A1848NK3	A1848NS	18x48	457x1219	12	5.4
A1854NC	A1854NK3	A1854NS	18x54	457x1370	14 1/2	6.6
A1860NC	A1860NK3	A1860NS	18x60	457x1524	17	7.7
A1872NC	A1872NK3	A1872NS	18x72	457x1829	20	9.1
A2124NC	A2124NK3	A2124NS	21x24	530x610	8	3.6
A2130NC	A2130NK3	A2130NS	21x30	530x760	9	4.1
A2136NC	A2136NK3	A2136NS	21x36	530x914	11	5.0
A2142NC	A2142NK3	A2142NS	21x42	530x1066	12	5.4
A2148NC	A2148NK3	A2148NS	21x48	530x1219	14	6.4
A2154NC	A2154NK3	A2154NS	21x54	530x1370	16	7.3
A2160NC	A2160NK3	A2160NS	21x60	530x1524	18	8.2
A2172NC	A2172NK3	A2172NS	21x72	530x1829	24	10.9
A2424NC	A2424NK3	A2424NS	24x24	610x610	9	4.1
A2430NC	A2430NK3	A2430NS	24x30	610x760	11	5.0
A2436NC	A2436NK3	A2436NS	24x36	610x914	13	5.9
A2442NC	A2442NK3	A2442NS	24x42	610x1066	15	6.8
A2448NC	A2448NK3	A2448NS	24x48	610x1219	16	7.3
A2454NC	A2454NK3	A2454NS	24x54	610x1370	18	8.6
A2460NC	A2460NK3	A2460NS	24x60	610x1524	21	9.5
A2472NC	A2472NK3	A2472NS	24x72	610x1829	26	11.8
A3036NC			30x36	760x914	15	6.8
A3048NC			30x48	760x1219	21	9.5
A3060NC			30x60	760x1524	26 1/2	11.8
A3072NC			30x72	760x1829	31	14.0
A3636NC			36x36	914x914	18	8.2
A3648NC			36x48	914x1219	23	10.4
A3660NC			36x60	914x1524	29	13.1
A3672NC			36x72	914x1829	34 1/2	15.4

NOTE: MICROBAN® protects the Metroseal 3 coating from bacteria, mold, mildew and fungi that cause odors, stains and product degradation. For Metroseal 3 shelving information see sheet #10.10A.



All Environments — Metroseal 3™ with *Microban® Antimicrobial Product Protection

Mobile Options



Stem Casters



Dolly Trucks



Replacement Parts
Each kit includes components for one original Super Adjustable or Super Adjustable shelf; (4) wedges, (4) sleeves, (4) shelf releases.
Model No. SAKITA2

SiteSelect™ Posts

STATIONARY Actual Height* (in.)	(mm)	Model No. Plated	Model No. Metroseal 3	Model No. Stainless	MOBILE Actual Height* (in.)	(mm)	Model No. Plated	Model No. Metroseal 3	Model No. Stainless	Approx. Pkd. Wt. (lbs.)	(kg)
7 3/8	187	7P	7PK3	7PS	6 3/4	171	7UP	7UPK3	7UPS	1/2	0.3
14 3/8	365	13P	13PK3	13PS	13 3/4	349	13UP	13UPK3	13UPS	1	0.5
28 3/8	720	27P	27PK3	27PS	27 3/4	704	27UP	27UPK3	27UPS	1 3/4	0.75
34 3/8	873	33P	33PK3	33PS	33 3/4	857	33UP	33UPK3	33UPS	2	0.9
54 7/16	1382	54P	54PK3	54PS	53 13/16	1366	54UP	54UPK3	54UPS	3	1.4
62 7/16	1585	63P	63PK3	63PS	61 13/16	1570	63UP	63UPK3	63UPS	3 1/2	1.6
—	—	—	—	—	69 3/4	1771	70UP	—	—	3 3/4	1.7
74 1/2	1892	74P	74PK3	74PS	73 7/8	1876	74UP	74UPK3	74UPS	4	1.8
86 1/2	2197	86P	86PK3	86PS	85 7/8	2181	86UP	86UPK3	86UPS	4 1/2	2.0
96 1/2	2450	**96P	96PK3	96PS						5 1/2	2.5

*Actual height for the stationary post includes the post cap and the leveling bolt completely tightened.

Important: When ordering by components remember that for maximum stability, units should be kept as wide and low as possible.

All Metro Catalog Sheets are available on our Web Site: **www.metro.com**

InterMetro Industries Corporation
North Washington Street, Wilkes-Barre, PA 18705
Phone: 570-825-2741 • Fax: 570-825-2852

For Product Information:
U.S. and Canada: 1-800-992-1776
Outside U.S. and Canada: www.metro.com/contactus

L02-006A
Printed in U.S.A. Rev. 2/17

Information and specifications are subject to change without notice. Please confirm at time of order.

Copyright © 2017 InterMetro Industries Corp.

SUPER ADJUSTABLE™ SUPER ERECTA SHELF®
Adjustable Wire Shelving

thermalrite

by CrownTonka California, Inc.

custom, modular cold storage







quality

value

service

design

warehouse systems • food service • environmental enclosures

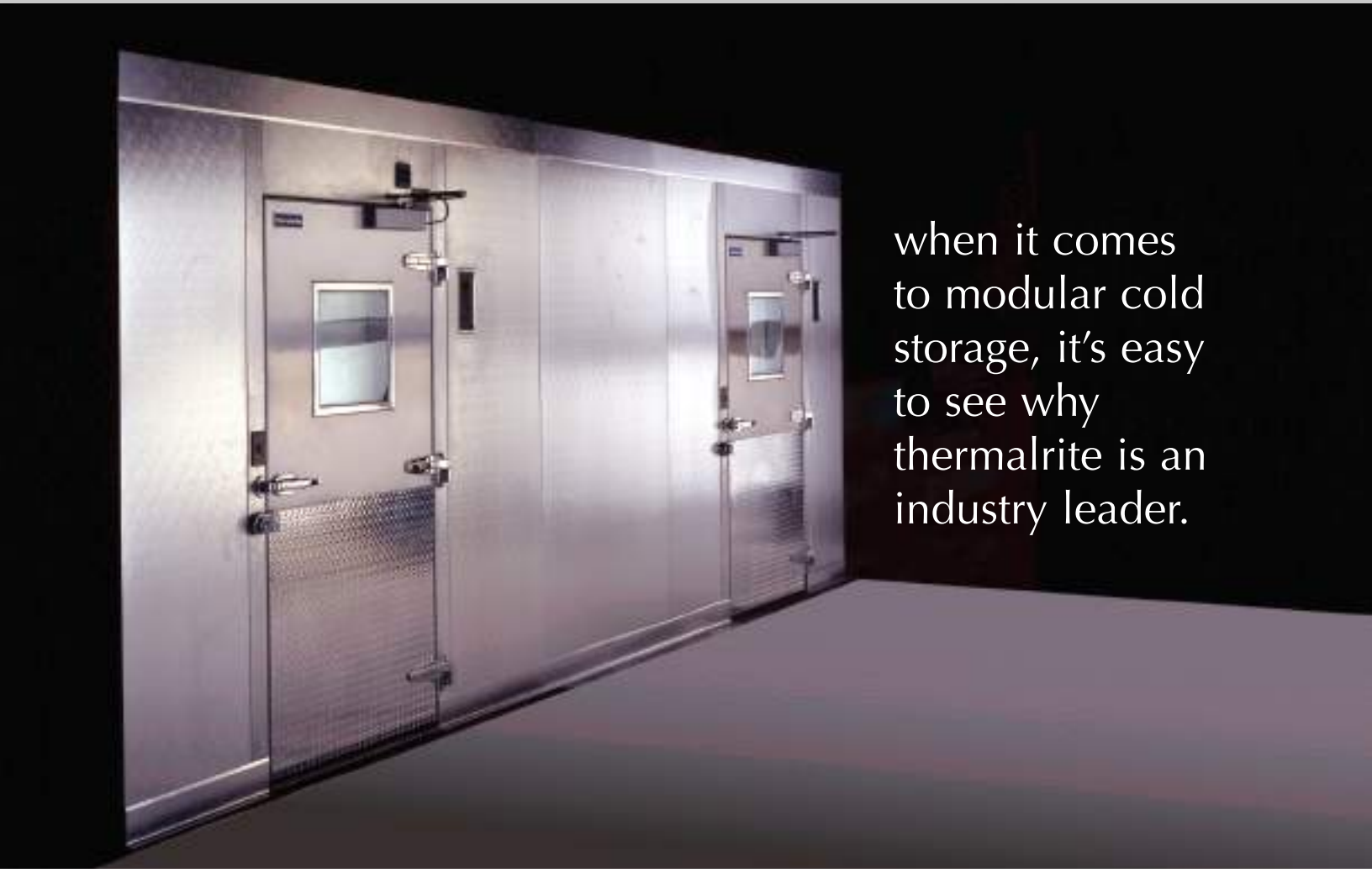

quality

Thermalrite® has been manufacturing Walk-in Coolers and Freezers for the food service industry since 1988. Our goal is to manufacture the finest quality walk-ins available and provide you with an unsurpassed level of service. All of our walk-ins are CAD designed to your exact specifications. Our panels are engineered and built for easy installation. During each phase of the manufacturing process we scrutinize quality, fit and finish to ensure that you get the best possible product.

service

From Quotations to Engineering, from Manufacturing to Delivery and Installation, we offer you outstanding service. Our trained, experienced Inside Sales Team, provides helpful, knowledgeable service from inquiry to delivery. Our plants in California, Minnesota, and Tennessee provide close proximity to all markets.

value

We use only the best U. L. Class 1 Non-CFC Urethane insulation available. Thermalrite® and its suppliers have incurred considerable expense in the development of ENVIROFOAM, an environmentally sensitive urethane foam. Our insulation is designed to bond with our panels to give strength and durability.

All of this translates into superior insulating properties which keep your operating costs at a minimum.

design flexibility

Custom designs – indoor, outdoor, angular, rectangular or any combination are all available in a variety of finishes and in varying thickness of four, five or six inches. We serve the warehouse, food service, institutional and environmental industries with walk-in coolers and freezers. With seamless panels up to 30 feet in length, we are ideal for warehouse applications and long spans. Our modular construction allows for easy remodeling, relocation or expansion.

why thermalrite?

- Custom Designs at Standard Prices. You get the exact size and shape you need.
- In-house design and engineering. We can help you to determine what design or configuration will best fit your unique requirements.
- Strongest all-foam panels on the market. High density foam rail with metal facing and foam-in place bonding equals strong long lasting panels.
- Doors and frames that are second to none. Doors are a full four inches thick and frames are reinforced for strength.
- Highest insulation values and best fire rating add up to the best insulating material available. UL, class 1, Non CFC ENVIROFOAM saves energy costs and meets building code requirements.
- Environmentally Friendly ENVIROFOAM.
- NSF Certified, UL Listed, USDA Approved panels.
- Engineered and Built for ease of installation.
- Experience. Thermalrite® has been manufacturing walk-in coolers and freezers since 1988.
- Foaming conducted in temperature-controlled area and controlled by the latest computerized equipment to insure proper mix density and fill resulting in the finest insulated panel available.



- The best walk-in value on the market.
- Parts department to supply your needs correctly and quickly (usually within 24 hours).
- Three strategically located manufacturing plants for quick and cost-effective delivery throughout North America.
- One-stop-shop for your complete walk-in package; refrigeration, shelving, and installation – hassle-free convenience.
- We stand behind our product – we honor our obligations. Check out our record.

classifications*

- NSF Certified
- U.L., Class 1 listed Urethane foam insulation in all Thermalrite® walk-ins.
- USDA Approved Materials
- UL Electric
- State of New York, MEA
- California Bureau of Home Furnishings and Thermal Insulation License
- State of Oregon
- Wisconsin (DHILR)
- City of Houston

*Thermalrite® insulated panels are manufactured to meet local codes in most cities. It is incumbent upon the customer to consult with the local inspector to assure compliance.



thermalrite installation examples

food service

- Anaheim Arena- The Pond
- Burger King
- Cheesecake Factory
- Hard Rock Cafe
- MGM Grand Hotel
- Kaiser Hospital
- Bakersfield Country Club
- Scenic Heights Elementary- Minnesota
- Brown County Prison
- UCLA

environmental and scientific

- Seattle Zoo
- Santa Barbara Zoo
- Hughes Aircraft
- Allied Signal
- Themodynamics

architectural specifications

metal and finishes

Standard interior and exterior metal finish:

- 26 Ga. Bright stucco embossed galvanized steel

Optional finishes available

- 26 Ga. Painted stucco embossed galvanized steel. Standard colors available are white, black and almond. Optional colors are available by request.
- .032 Stucco embossed aluminum
- .040 Smooth white aluminum
- .040 Stucco embossed aluminum
- 22 Ga. Type 304 stainless steel #4 finish

Interior floor finishes

- .050 Smooth aluminum
- 24 Ga. Type 304 stainless steel with #2B finish
- .100 aluminum diamond thermalrite

Other gauges and finishes are available upon request.

insulation

Standard insulation is foamed-in-place Non-CFC U.L. Class 1 rated urethane foam. It has a thermal conductivity (K Factor) of .120* BTU/Hr/Sq. ft/Degrees/F/in. and overall heat transfer coefficient (U Factor) of not more than .030 BTU/Hr.Sq.Ft.

Class 1 urethane foam has a flame spread of 25 or less overall and smoke developed of less than 450. Recommended wall thickness is nominal 4″. Foam rail panels also available in 4″ - 6″ thickness.

panel construction

Walk-ins are all custom designed to fit the individual customers' needs. Each panel consists of an interior and exterior metal pan with structural, high density foam rail frame. These pans are separated by rigid foam-in place self-extinguishing urethane insulation which adheres to the interior of the pans providing increased structural strength. All panels have tongue and groove construction and gasket is applied to all joints forming an air-tight seal.

panel fasteners

All panels are joined together using a cam-locking fastener, operated with a hex wrench. Access holes are sealed with vinyl snap-in caps. Standard construction is cam-locking ceilings to walls; lag-down ceilings are also available.

floorless models

Alignment screed is furnished for all floorless models. Screeds are designed to be anchored to masonry floors to provide an accurate template for the erection of wall panels.

floor panels

Floors are built with metal bonded to exterior grade underlayment and foamed-inplace. Floors are capable of maintaining a load maximum of 1000lbs./sq/ft. when uniformly distributed, and are NSF certified.

walk-in accessories and features

Standard:

- 2 1/2″ Dial Thermometer
- 100 Watt incandescent light fixture with vapor proof globe
- Flush Mount OSHA press switch factory installed and wired to outside ceiling
- NSF Certified Construction
- UL Listed Class 1 Non-CFC Urethane Foam
- USDA Approved Materials

Optional

- Refrigeration Systems
- Roof Systems for outdoor applications
- Display Doors
- Double Acting Doors
- Strip Curtains
- Alarm Systems
- Digital Thermometers
- Storage Shelving
- Built in Wall Supports
- Heavy Duty Floor Plates
- Foamed in Place Electrical Boxes

door, jamb and hardware

Standard Thermalrite walk-in doors are self-closing, flush mount type.

Standard features:

- High quality heavy duty hardware with safety release
- Magnetic door gasket
- Heated jamb (freezer only)
- Heated threshold (freezer only)
- Heated pressure relief vent (freezer only)
- Doors up to 48″ width are pre-hung
- Heavy duty door frame

Optional Door Features and Accessories:

- Bi-parting doors
- Reach-in Service Doors
- Sliding Doors
- Heavy Duty Impact Plate
- View Ports

Thermalrite® reserves the right to change specifications without notice.

thermalrite
by CrownTonka California, Inc.
6514 East 26th Street • Commerce, CA 90040
(800) 290-7073 • sales@thermalrite.com
www.thermalrite.com

Typical Wall, "T", Corners

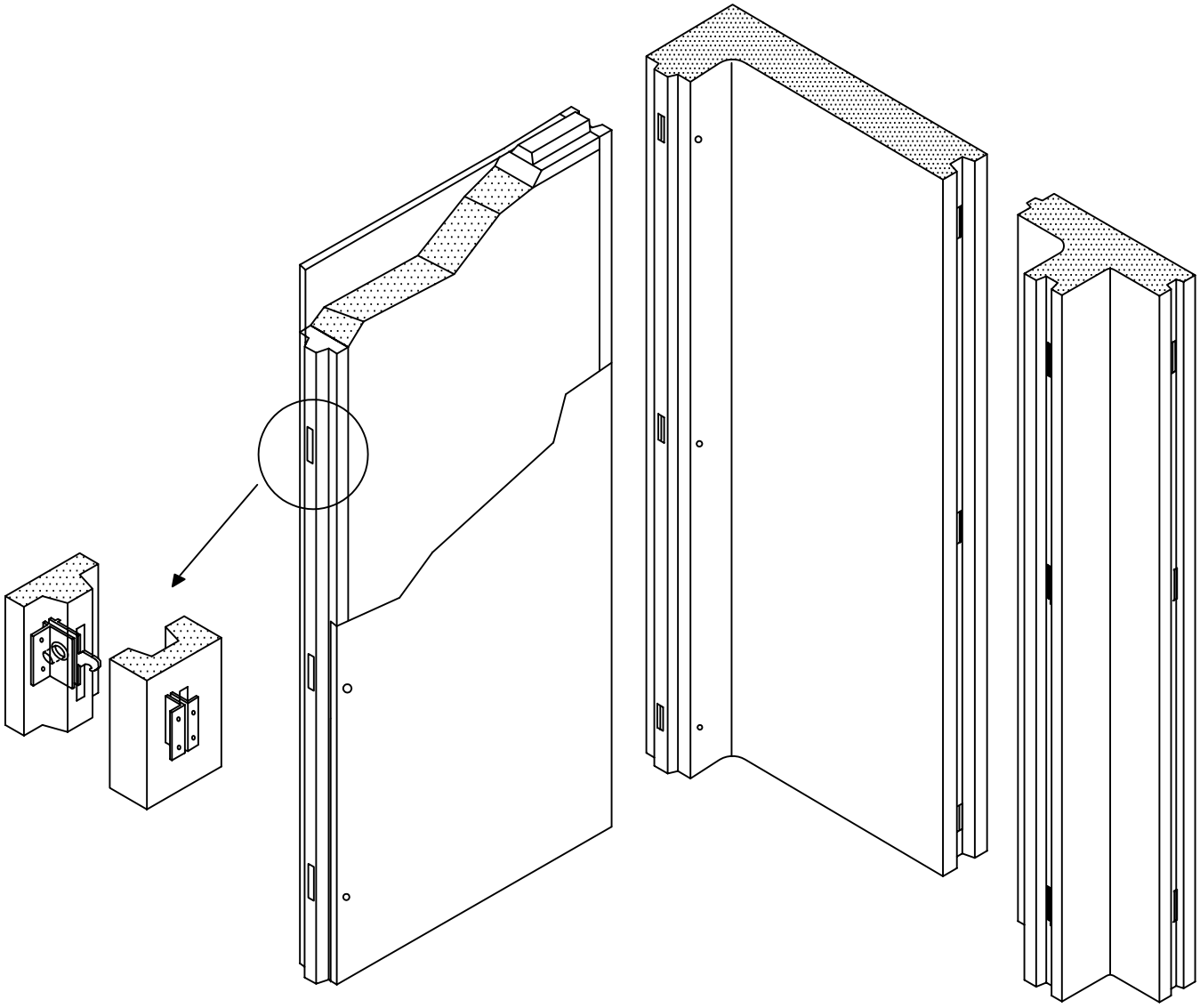

STANDARD WALL PANEL SIZES ARE 47" WIDE, CORNER SECTION
5 1/4" x ANY LENGTH (47") TO MEET CUSTOM REQUIREMENTS
WITH 1/4" RADIUS ON INTERIOR FOR N.S.F. REQUIREMENTS.
WALL PANEL HEIGHT PER CUSTOMER REQUEST (FROM 0" UP TO 30'-0" HIGH).

thermalrite
WALK-IN COOLER AND FREEZERS
4215 E. AIRPORT DRIVE
ONTARIO, CA. 91761
phone (909) 605-6419 fax (909) 605-6413

0027C DEADBOLT LOCKING HANDLE



- Deadbolt security for walk-ins at the economy of a locking pull handle
- Deadbolt is secured using cylinder lock or padlock, or both
- Deadbolt can be locked in open position
- Self-adjusts to wall thickness variations
- Standard, twist-off glow in the dark inside release knob prevents lock-ins
- Two 1/4 turn inside release options meet ADA requirements for fast exit
  - 1/4 turn Inside Release, shown above with handle
  - 27c 1/4 Turn Low Conduction Inside Release, shown to the right
- Locking mechanism located outside resists freeze-up

Flush offset and 4" thick wall standard. Other wall thicknesses available. Consult factory.
1-5/8" offset option listed in model number table; Available down to 1/2"

U.S. Patent No.: 6,526,788
1/4 Turn Inside Release Patent No.: 9,068,376 & 6,526,788

Specifications

LATCH

MATERIAL:

Die-cast Zamak handle housing, tongue and strike.

FINISHES:

Polished chrome and brushed chrome.

PACKAGING

6 per carton

LATCH

LOCKING MECHANISMS:

Cylinder lock (may be keyed alike or randomly). Accepts 5/16" (7.9mm) dia. shank padlock (customer supplied).

MOUNTING:

Drilled and countersunk for 1/4" (6.4mm) fillister head screws.

STRIKE

MATERIAL:

Die-cast Zamak housing, brass rod, glow-in-the-dark polycarbonate turn-knob.

FINISHES:

Housing same as latch.

1248 SPRING ASSISTED HINGE



- Spring mechanism adds extra closing force to overcome air resistance on heavy walk-in doors
- Special high-lift cam system outperforms similar spring hinges
- Cam-rise action reduces gasket wear, even with irregular floors
- Built-in dwell holds door open beyond 130°
- Simple manual operation reverses hinges for use on right or left-opening door

U.S. Trademark: 2,415,070

Specifications

MATERIAL

High pressure die-cast zinc with self-lubricating nylon cam.

MOUNTING

WEIGHT

Approx. 19.5 lb (8.85 kg) per carton

PACKAGING

6 each

1094 SURECLOSE™ HYDRAULIC DOOR CLOSERS



- Powerful gas-loaded hydraulic cylinder guarantees controlled closure
- Exposed and concealed mounting models
- Solid steel enclosed housing and bend-resistant hook assure long wear in heavy use
- Extra-wide hook ensures roller pick-up and overcomes alignment problems
- Life-cycle tested to operate reliably even after a half-million closures
- Perfect complement for Kason Walk-in hinges and latches where self-closing doors with controlled closure are needed
- Mounting slots on hook allow for easy adjustment to compensate for door sag, keeping roller aligned with hook for proper function

U.S. Trademarks: 3,212,100 & 5,809,887

MATERIAL
Heavy gauge steel. Housing and hook also available in stainless steel
FINISH
Polished or brushed chrome, stainless steel, or powder coat
MOUNTING
Holes drilled for No. 10 (5.0 mm) screws (included).

KASON
57 AMLAJACK BLVD. NEWNAN, GA 30265
1-800-935-2766
WWW.KASONIND.COM

PROJECT NAME: _____
LOCATION: _____
IDN# _____ QUANITY: _____
CATALOG# _____

CAT NO. 1806LED

LIGHT FIXTURE AND OPTIC GLOBE, LED

1806 LED FIXTURE



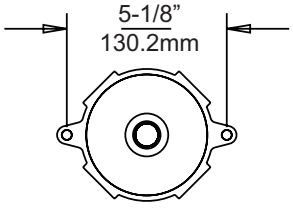

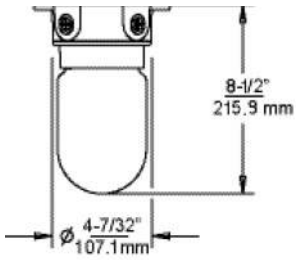

SAVES MONEY AND ENERGY

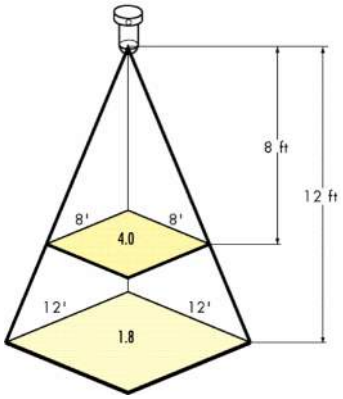

FEATURES AND SPECIFICATIONS

- Lumanaire: Rating IP-65 for wet and cold environments
- Light Output: 980 lumens
- 85 lumens/watt- exceeds Federal Energy Act requirements
- Bright 5000K color temperature
- Rated 50,000 hour life
- No Ultraviolet Emission: Does Not Attact Insects
- Ideal operating temperature range from -40F to 70F (-40C to 21C)
- Power: 120 VAC at 60 Htz (line voltage)
- Rating: 11.5 watt, 120 V
- Five 1/2 NPT conduit connections
- GU24 socket
- Globe: Lexan with Light Intensifying Focused Optics (LIFO)
- Housing: Aluminum
- 5 year limited warranty on fixture
- 3 year limited warranty on lamp
- RoHS compliant and NSF listed
- Lamps and fixture cULus listed
- U.S. Patent Pending

LIGHT DISTRIBUTION FOR 1806 LED

Height in Feet	Average FC for Single Fixture Over Indicated Area	
	8' x 8'	12' x 12'
5	5.5	2.9
8	4.0	2.3
9	-	2.1
12	-	1.8
13	-	-
16	-	-
17	-	-
20	-	-

Model No.	Model Description
1806LED000	Fixture w/ Lamp and Optic Globe
1806LED014	Replacement Lamp, GU-24, 120 VAC, 11.5W, 60 HZ, 5000K Color Temperature

Above Packaging: 25 per Carton, approx. 17 lb. (7.7kg)

ACCESSORIES

11901A00005.....LOW BAY MOTION SENSOR
11901A00007.....HIGH BAY MOTION SENSOR
11806LED014.....REPLACEMENT LAMP

NSF COMPONENT
c UL us LISTED
GreenGuard BY KASON INDUSTRIES
LM-79 TESTED
UL FILE No.E333932

APPROVALS:

DATE:

© 2012 Kason Industries, Inc., All Rights Reserved

LED VAPOR TIGHT LINEAR FIXTURE
AL SERIES



48"45W LED Vapor Tight

FEATURES:

- Built-in aluminum heat sink, with V0 Fire-Rated PC housing and improved safety factor of Hi-pot>5000V
- Unique design and appearance
- Meets wide beam lighting demands
- IP65 Rated
- Surface mount standard with optional suspension kit
- White Finish standard
- CRI>82
- Delivered Lumens: 5400
- Efficacy less than 120(LM/W)
- Designed for cold, wet environments
- Qualified for utility rebates
- Instant on lighting in cold environments

PRODUCT DESCRIPTION:

A cost effective LED Vapor Tight Fixture that features full length polycarbonate (PC) lens and one piece white Polycarbonate body. Used for utility lighting in walk in coolers,freezers and beer caves.

CONSTRUCTION:

- Integral design and fully compact structure
- Frosted Lens
- Universal voltage 100V-277V
- Non-Dimming standard
- Class II Fixtures

Class II

IK09

IP65

ORDERING:

ORDER CODE	MODEL	DESCRIPTION	CCT	SIZE
73322	AL-TP45WYYK4FT1N&	4'LED VAPOR TIGHT 100-277V 45W Non-Dim 5000K	5000K	4'

EVERIDGE
Every step of the way

SPECIFICATIONS:

ITEM	SPECIFICATION	AL-TP45WYYK4FT1N& DETAILS
GENERAL PERFORMANCE	Color Temperature (CCT)	5000K
	Wattage	45W
	DeliverLumens	5400
	Efficacy(LM/W)	>120
	Spacing Angle	1.18(0° - 180°)
	Beam Angle	270°(V)
	SDCM	≤5
	Color Consistency	Proprietary binning for uniform color
	Lumen Maintenance (L70)	50,000 hours
ELECTRICAL	Power Factor	Over 0.90
	Maximun THD	<20%
	Input Voltage	100–277V
	Power Consum. (tested)	<42.20
PHYSICAL	Dimensions (LxWxH)	49.3"x3.70"x2.37"
	Dimensions/OccCntrl	49.3"x3.70"x2.37"
	Weight	5+/–.5lbs
	Housing	V0 Fire–Rated PC
	Lens	Ribbed Clear Polycarbonate Std
	Mounting	Ceiling Surface mount (Hardware incl)
	Operating Temperature	–20°F to 104°F (–28°C to 40°C)
CERTIFICATION	Certifications	DLC, UL, Lm79, Lm80
	Material Usage	RoHS compliant: no mercury
	Environment	Indoor Covered - Wet, IP65
	Warranty	5 Years

L70 LUMEN MAINTENANCE AT 25°C PER IESNA TM-21-2008	
MODELS	IESNA CALCULATED LIFE
AL–TP45WYYK4FT1N&	54,000Hrs

*Above does not include 347v series calculated life.

EVERIDGE
Every step of the way

MODULARM 75LC multi-monitor

FOR WALK-IN COOLERS AND FREEZERS

"A New Industry Standard in Walk-In Monitoring"

TEMPERATURE ALARM



- Protects against product loss
- Patented **Autoset™** Technology automatically adjusts alarm setpoints for a cooler or a freezer (Eliminates manual programming in most applications)

DOOR AJAR ALARM



- Saves Energy
- Improves efficiency
- Reduces coil icing
- Lowers maintenance costs
- Helps maintain product integrity & prevent loss



AC FAILURE ALARM



- Protects against product loss in AC Failure
- Built-In Battery Back-up with recharging circuitry maintains operation in AC Failure

PANIC ALARM



- Increases operator safety
- **Manual** & **Automatic** Panic Alarms Provide Maximum Protection
- Low voltage ***IP-1*** Illuminated Push Button for panic alarm activation



IP-1

PATENTED AUTOMATIC LIGHT CONTROL

- Saves Energy
- Eliminates Conventional Light Switches
- ***IP-1*** Illuminated Push Button provides light control inside the box
- Motion sensor compatible for light activation
- Energy Act Compliant

- ◆ SAVES ENERGY
- ◆ INCREASES OPERATOR SAFETY
- ◆ PROTECTS PERISHABLES
- ◆ LOWERS MAINTENANCE COSTS

MODULARM CORPORATION
61 Mall Drive, Commack, NY 11725 • PH: 631.864.3860 • FX:631:864.3863
http://www.modularm.com

MODULARM 75LC multi-monitor

FOR WALK-IN COOLERS AND FREEZERS

FEATURES

- COMPACT DESIGN FOR FLUSH OR SURFACE MOUNTING IN A SINGLE GANG WEATHERPROOF ENCLOSURE
- SIMPLE 3 BUTTON USER INTERFACE
- PAS-PRO™ PROGRAMMING IS SIMPLE AND SECURE
- BUILT-IN POWER SUPPLY (NO REMOTE TRANSFORMER)
- BUILT-IN RECHARGEABLE BATTERY WITH RECHARGING CIRCUITRY
- BUILT-IN AUDIBLE & VISUAL ALARM ANNUNCIATION
- BUILT-IN PROGRAMMABLE DRY CONTACTS (N/O & N/C) FOR REMOTE NOTIFICATION
- HI & LO ALARM TEMP SETPOINTS
- RINGBACK FEATURE PROVIDES TIMED REPEAT AUDIBLE ALARMS DURING AN ALARM CONDITION
- READOUT IN ºF OR ºC WITH AUTOMATIC SCALE CONVERSION
- ADJUSTABLE ALARM DELAYS
- OPTIONAL LOW VOLTAGE IP-1 ILLUMINATED PUSH BUTTON REMAINS LIT IN A POWER FAILURE TO HELP FIND THE DOOR
- 3 & 4 WAY LIGHT SWITCHING CAPABLE
- BUILT-IN DATA PORT FOR REMOTE COMMUNICATION & SYSTEM EXPANSION
- ONE OR TWO COMPARTMENT MONITORING CAPABLE
- ALL 75LC FUNCTIONS ARE AVAILABLE SIMULTANEOUSLY
- PRIVATE LABELING IS AVAILABLE

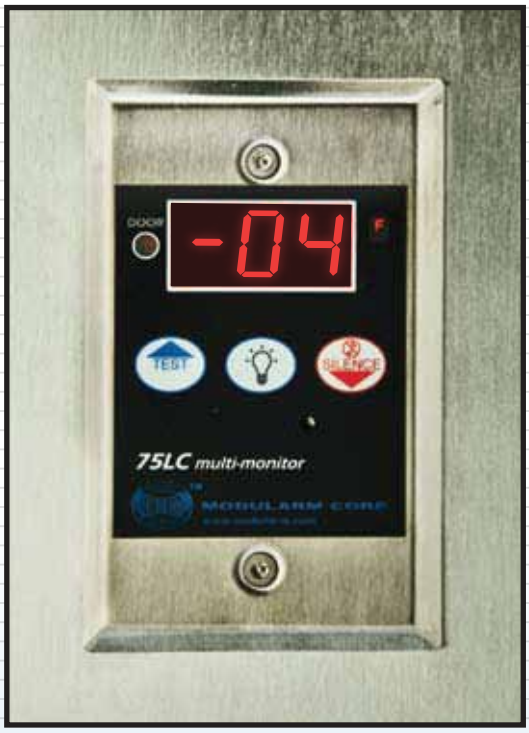

FLUSH MOUNT

SPECIFICATIONS

- DIMENSIONS: SURFACE: 4.5” L x 2.75” W x 2.25” D, FLUSH: ENCLOSURE RECESS - 1.9” D
- TEMPERATURE RANGE: -40°F TO 125°F (-40°C TO 52°C) STANDARD 25’ SENSOR LINE. OTHER LENGTHS AVAILABLE.
- ACCURACY: ± 1°F FROM -25°F TO 70°F (-32°C TO 21°C), ± 2°F FULL RANGE
- ALARM RELAY: N/O & N/C DRY CONTACTS, 1A @ 28VDC, Class 2
- LIGHT RELAY: 8.3A@120VAC, 1000W
- POWER REQUIREMENTS: 120VAC, 30MA

ANOTHER BRIGHT GREEN IDEA FROM MODULARM CORPORATION

WARRANTY STATEMENT

Modularm warrants its products to be free from defects in material and workmanship under normal use and service for a period of one year from the date of the original installation. Any products found to Modularm’s satisfaction to be defective upon examination at Modularm’s factory will at Modularm’s option, be repaired or replaced and returned to purchaser via lowest common carrier. Return of the defective product to Modularm’s plant, freight prepaid, by purchaser, correction of such defect by repair or replacement, and return freight via lowest common carrier, shall constitute full performance by Modularm of its obligations hereunder. Modularm shall have no liability for expenses incurred for repairs made by purchaser except by prior, written authorization. Every claim on account of a breach of warranty shall be made to Modularm in writing within the warranty period specified above – otherwise such claim shall be deemed waived. Modularm shall have no warranty obligation whatsoever if the product has been subjected to alteration, misuse, negligence, corrosive atmosphere, accident, or if operation is contrary to Modularm’s instructions or applicable laws, regulations, code or industry practice. NO OTHER WARRANTY EXPRESSED OR IMPLIED, WHETHER OF FITNESS OR MERCHANTABILITY OR OF ANY OTHER KIND SHALL EXIST IN RESPECT TO MODULARM’S PRODUCTS. Under no circumstances shall Modularm be liable for any loss, damage, cost of repair, installation or reinstallation, or consequential damages of any kind in connection with the use, sale or repair of any products purchased from Modularm.

Copyright 2009, Modularm Corporation
Protected under US patents #6401466 & #7145463
Other patents pending

MODULARM CORPORATION
61 Mall Drive, Commack, NY 11725 • PH: 631.864.3860 • FX:631:864.3863

MODULARM CORPORATION

61 Mall Drive, Commack, NY 11725, Tel 631.864.3860 Fax 631.864.3863

Web: www.modularm.com Email: sales@modularm.com

MODEL 75 LC MULTI-MONITOR FEATURE DETAILS

This document is provided to offer more detailed information on certain features of the Model 75LC:

- **Patented Autoset Technology – Autoset** lets the 75LC select the correct alarm temperature setpoints for a cooler or a freezer **automatically**, virtually eliminating the need for manual programming. Common **cooler** and **freezer** setpoints are pre-loaded into the 75LC. The cooler setpoints are the default settings, used if the monitored compartment is a cooler. If the compartment is a freezer, **Autoset** detects the lower compartment temperature and the 75LC **automatically** changes to the freezer setpoints. (Freezer setpoints won't revert to cooler setpoints if the temperature rises.) Cooler defaults can be easily restored manually when necessary, and a faceplate accessible password protected programming menu allows for customized settings.

- **Timed Light Control, including Auto Panic** - The 75LC offers both timed lighting and timed lighting with Auto Panic. Timed lighting with Auto Panic is the chosen default because we believe it is **the safest mode of operation**. The comparison chart below is provided to better understand the difference between timed lighting operation and timed lighting operation with Auto Panic. Timed lighting operation by a competitor product is also provided for comparison.

Competitor Timed Lighting: (Typically utilizes magnetic contacts to sense door status with 15 minute Energy Act Compliant Timing.)

Open Door - Lights turn on, light timer starts. Lights stay on until timer expires, then lights turn off.

Comments: Possibly not Energy Act compliant. Personnel in the box with the door closed may be "left in the dark" when the timer expires.

Patented 75LC Timed Lighting:(Requires magnetic contacts to sense door status, and IP-1 button **inside** of walk-in.) The light timer is preset for 15 minute Energy Act compliant timing.

Open Door - Lights turn on.

Close Door - Light timer starts, lights stay on while light timer is running. 40 seconds before light timer expires, the IP-1 starts to "beep and blink" to warn personnel that lights will be turning off. Pressing the IP-1 resets and restarts the light timer and keeps lights on. This happens repeatedly. If no one is in the box to press the IP-1, lights turn off when the light timer expires. (**Note 1**: If lights are off, the IP-1 always works as a **"lights on" switch inside of the walk-in**.) (**Note 2**: Press and hold the IP-1 for 2 seconds at any time to generate a manual panic alarm.) (**Note 3**: In coolers, The MD-1 motion detector may be used instead of or in addition to the IP-1. MD-1 activation duplicates an IP-1 press and automates the process.)

Comments: Compliant. Safer than competitor timed lighting because the IP-1 or the MD-1 provides light control, light timer reset and warning that lights will be turning off inside the walk-in.

MODULARM CORPORATION
61 Mall Drive, Commack, NY 11725, Tel 631.864.3860 Fax 631.864.3863
Web: www.modularm.com Email: sales@modularm.com

Patented 75LC Timed Lighting with "Auto Panic": (Requires magnetic contacts to sense door status and IP-1 button **inside** of walk-in.) The light timer is preset for 15 minute Energy Act compliant timing.

Open Door - Lights turn on.

Close Door - Light timer starts, lights stay on while light timer is running. IP-1 starts to beep and blink **immediately** when the door is closed to prompt a button press. Pressing the IP-1 does the following:

1) Stops the light timer and makes lights stay on **indefinitely for as long as the door is closed**.
2) Starts a **built-in 20 minute auto panic timer**.
3) "Locks out" the Light Switch on the 75LC so that someone outside the walk-in can't turn off lights while the box is occupied.

After 20 minutes, the IP-1 starts to beep and blink again for 40 seconds to prompt a "check in" button press. Pressing the IP-1 resets and restarts the Auto Panic timer. This happens repeatedly for as long as someone remains in the box with the door closed. If the IP-1 isn't pressed within 40 seconds, the 75LC **automatically generates a panic alarm ("HLP"** appears on the 75LC display) to let personnel outside the box know that someone may be injured or disabled inside of the walk-in. Opening and closing the door resets all functions. If no one is in the box to press the IP-1, lights turn off when the light timer expires. (**Note 1**: If door is closed and lights are off, the IP-1 always works as a **"lights on" switch inside of the walk-in** and always activates the auto panic timer when pressed.) (**Note 2**: Press and hold the IP-1 for 2 seconds at any time to generate a manual panic alarm.) (**Note 3**: In coolers, The MD-1 motion detector may be used instead of or in addition to the IP-1. MD-1 activation duplicates an IP-1 press and automates the process.)

Comments: Compliant. Our default selected safest mode of operation.

- **Manual Lighting Control** - As an easily selectable alternate mode of operation, the 75LC may be utilized as an **untimed, standard on-off light switch** for applications where timed lighting is not required, thus replacing standard light switches.

- **AC Power Failure Alarm** – The 75LC includes a built-in rechargeable battery with built-in recharging circuitry for on premise and remote notification power failure alarm. The battery backup keeps the system completely operational for up to 10 hours in a power failure, and the **battery backup also keeps the low voltage IP-1 Illuminated Push Button lit so that personnel can find the door if they are inside the walk-in when a power failure occurs.**

Russell

All-Temp²B

Now available with optional ECM Motors

High Efficiency / High Reliability

Low Profile Unit Cooler

Publication No. 100.14
January, 2008

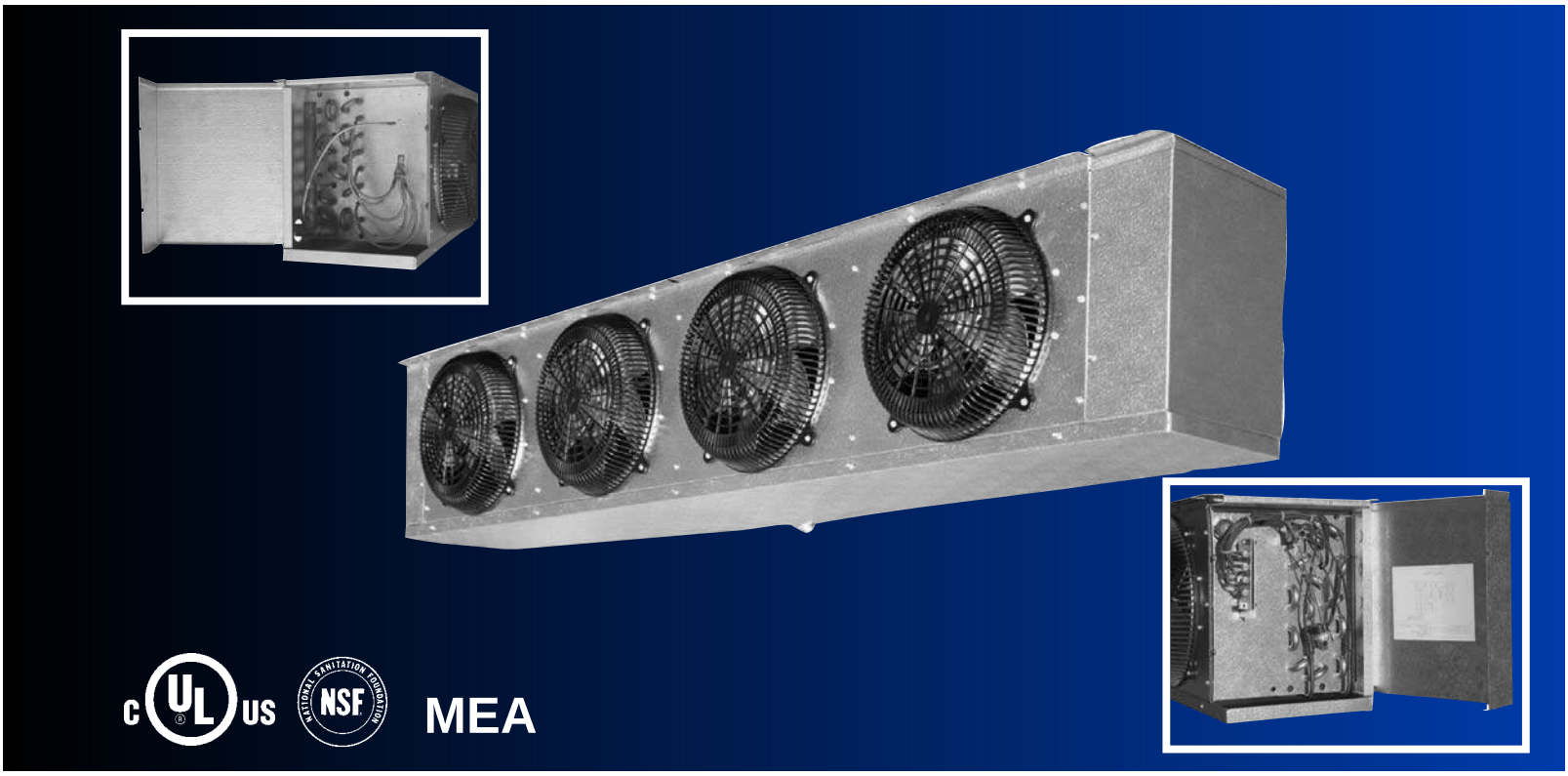

Air Defrost - 3,900 to 39,000 BTUH
Electric Defrost - 3,600 to 28,000 BTUH
Hot Gas Defrost - 3,600 to 28,000 BTUH

Small to Medium Walk - Ins

Coolers & Freezer Applications

Russell

Visit us on the Web: **www.russellcoil.com**
221 S. Berry St., P.O. Box 1030, Brea, CA 92822-1030 • Tel: (714) 529-1935 • Fax: (714) 529-7203

Russell All-Temp²B

Features

The Russell All-Temp²B is the original low profile unit cooler that has established an industry standard as being the all purpose design for walk-in coolers, freezers and other applications. They feature an air draw-through design offering air, electric and hot gas defrost models.

Sizes

There are 35 sizes available with 3,700 to 39,000 BTUH at a 10° TD ranging from 740 to 4,980 cfm. One through six fan models are available.

Housing

Rust-free, heavy gauge, textured Aluminum casing is light weight yet durable. Each fan section is baffled to prevent short cycling of the air. The unit is designed to mount flush to the ceiling and meets all NSF requirements. Slotted hangers are provided for easy installation. Drain fittings are installed in the horizontal position to gain more usable head-room in low ceiling applications. The end panels now are hinged to open up out for easy access to both the piping and electrical ends. Optional expansion valves can be conveniently installed inside the cabinet.

Coil

Seamless Copper tubes are staggered and mechanically expanded into corrugated Aluminum fins and heavy gauge tube sheets to achieve maximum heat transfer and strength. Die formed fin collars provide even fin spacing. Fin spacings available are 4, 6, and 8 fins per inch. Sweat connections are standard on all models and optional field installed flare connection kits are available at no extra charge.

Motors

Standard motors are 1/20 HP, permanently lubricated, ball bearing, with thermal overload protection. Available in 115V, 208/230V and 460V, single phase. Optional high efficiency PSC and ECM motors are available in 115V and 230V.

Fans

Heavy duty 12” Aluminum fans are balanced to provide vibration-free operation. Our new low throw black plastic fan guards have an improved air pattern. The optional epoxy resin high throw fan guard moves air up to 50 feet.

Air Defrost

All models with the prefix “AA” are designed for use in coolers of 35°F and warmer. Complete air defrost systems for off-cycle or timed air defrost are available from Russell.

Electrical

Available in 115V, 208/230V, and 460V (see pages 4 & 5). All components are factory wired to convenient screw-type terminal strips. A large compartment is supplied internal to the unit for all electrical components and is easily accessible by removing the end panel. All models are UL & cUL listed.

Electric Defrost

Available on all models with the prefix “AE”. Designed for use where electric heat is used to defrost. Placement of the heaters internal to the coil allows for an extremely rapid and efficient defrost. This arrangement enables the heat to be conducted through the fins from the center out for an even defrost pattern. All heaters are wired to a terminal strip to allow a quick field change-over from single phase to three phase, 230V to 460V and vice versa. A lower heater is installed close to the drain pan for fast, reliable drainage. A defrost termination thermostat (DT) terminates the defrost cycle when the temperature is satisfied. A heater safety thermostat is installed to prevent heaters from overheating above 75° in case of DT failure. All heaters are flexible and can be easily replaced within 12 inches of the end of the units. A fan delay thermostat is supplied to allow the warm coil to cool after a defrost cycle prior to the fans turning on. Complete electric defrost refrigeration systems are available from Russell.

Hot Gas Defrost

Two types available - Re-Evap models with the prefix “AH” and reverse cycle with the prefix “AG”. All models include a fixed DTFD factory wired and a hot gas drain pan circuit to defrost the drain pan. On all Hot Gas models, the drain fitting is located on the left-hand rear of the unit when facing the fan guards. Re-evap models include a Heat Exchanger-Re-Evaporator shipped together with the unit for field installation. Complete Re-Evap Refrigeration Systems are available from Russell. Contact factory for piping information.

Optional Features

- High efficiency PSC or ECM fan motors
- Coated Aluminum fins or Copper Fins
- Baked white enamel housing
- Epoxy resin high throw guards for up to 50 ft.
- Reheat kits (not UL listed)
- Factory mounted expansion valves

All-Temp²B

RUSSELL's optional **ECM motors**
bring the benefits inherent to unit bearing motor design
to the refrigeration Unit Cooler market.

- **Large oil resevoir**
- Totally enclosed construction
- **Journal bearing machined into the cast iron endbell**
- Spiral grooved shaft pump **guarantees** positive oil circulation
- **Threaded shaft uses hubless fan blade.**

Energy Savings per Motor

by Changing to More Efficient Unit Cooler Motors (baseded on Energy Cost of $0.10 per kWh)

Motor Change	Std Motor Power Watts/Mtr	Change to Motor Power Watts/Mtr	Reduced Power Watts/Mtr	Run Time Hrs/ Day	Motor Energy Savings kWh/Yr	Motor Energy Savings $/Yr	Reduced Box Load MBTU/Yr	Cond. Unit Energy Savings $/Yr	Yearly Saving $ **Per MTR**	Pay back in Yrs
SP to PSC	120	85	35	22	281	28	959	18	**47**	0.6
PSC to EC	85	47	38	22	305	31	1041	20	**51**	2
SP to EC	**120**	**47**	**73**	**22**	**586**	**59**	**2000**	**38**	**97**	**1.3**

Subtract 6% from total savings for medium temperature air defrost units that run 24 hours per day.
SP = 1/20 HP Shaded pole motor (Standard motors)
PSC = 1/20 HP PSC motor (Optional motors available at additional cost)
ECM = 50 Watt Electronically Commutated motor (Optional motors available at additional cost)

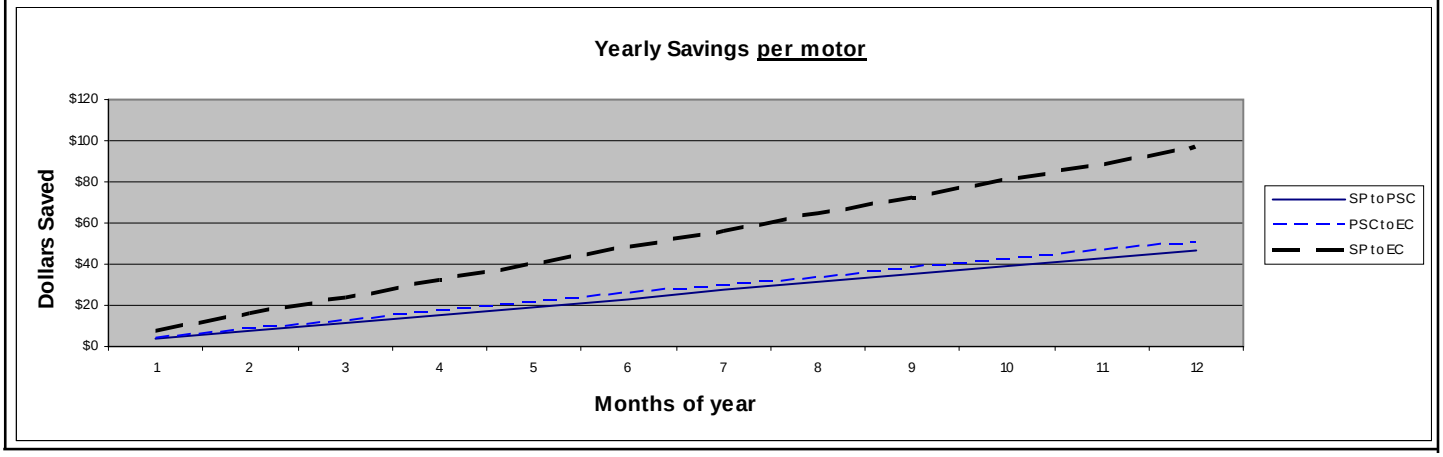

Nomenclature

A A 1 8 - 41 B - A

- **A** — All-Temp²B
- **A** — Type of Defrost
  - A = Air Defrost
  - E = Electric Defrost
  - H = Hot Gas Re-evap
  - G = Hot Gas Rev. Cycle
- **1** — Number of fans
- **8** — Fins per inch
- **41** — BTUH in hundreds
- **B** — Revision Code
- **A** — Voltage Code
  - A = 115V
  - B = 208/1/60
  - C = 230/1/60
  - D = 208-230/1/60
  - E = 208-230/3/60
  - F = 460/1/60

Air Defrost / Specifications

	Model Number	BTUH Capacity @ 25°F S.T.		CFM	Total Fan Motor AMPS - 1 Phase						
					Standard Motor			Optional PSC Motor		Optional ECM Motor	
		10° TD	12° TD		115V	230V	460V	115V	230V	115V	230V
8 FPI	AA18-41B	4,100	4,900	800	2.0	1.0	0.5	1.0	0.5	0.9	0.45
	AA18-53B	5,300	6,400	770	2.0	1.0	0.5	1.0	0.5	0.9	0.45
	AA18-66B	6,600	7,900	740	2.0	1.0	0.5	1.0	0.5	0.9	0.45
	AA28-76B	7,600	9,100	1,460	4.0	2.0	1.0	2.0	1.0	1.8	0.90
	AA28-97B	9,700	11,600	1,420	4.0	2.0	1.0	2.0	1.0	1.8	0.90
	AA28-106B	10,600	12,700	1,540	4.0	2.0	1.0	2.0	1.0	1.8	0.90
	AA28-122B	12,200	14,600	1,380	4.0	2.0	1.0	2.0	1.0	1.8	0.90
	AA28-134B	13,400	16,100	1,480	4.0	2.0	1.0	2.0	1.0	1.8	0.90
	AA38-160B	16,000	19,200	2,310	6.0	3.0	1.5	3.0	1.5	2.7	1.35
	AA38-195B	19,500	23,400	2,220	6.0	3.0	1.5	3.0	1.5	2.7	1.35
	AA48-212B	21,200	25,400	3,080	8.0	4.0	2.0	4.0	2.0	3.6	1.80
	AA48-264B	26,400	31,700	2,960	8.0	4.0	2.0	4.0	2.0	3.6	1.80
	AA58-275B	27,500	33,000	3,850	10.0	5.0	2.5	5.0	2.5	4.5	2.25
	AA68-318B	31,800	38,200	4,620	12.0	6.0	3.0	6.0	3.0	5.4	2.70
	AA68-390B	39,000	46,800	4,440	12.0	6.0	3.0	6.0	3.0	5.4	2.70
6 FPI	AA16-39B	3,900	4,700	830	2.0	1.0	0.5	1.0	0.5	0.9	0.45
	AA16-48B	4,800	5,800	800	2.0	1.0	0.5	1.0	0.5	0.9	0.45
	AA16-58B	5,800	7,000	780	2.0	1.0	0.5	1.0	0.5	0.9	0.45
	AA26-70B	7,000	8,400	1,540	4.0	2.0	1.0	2.0	1.0	1.8	0.90
	AA26-87B	8,700	10,400	1,500	4.0	2.0	1.0	2.0	1.0	1.8	0.90
	AA26-115B	11,500	13,800	1,560	4.0	2.0	1.0	2.0	1.0	1.8	0.90
	AA36-145B	14,500	17,400	2,400	6.0	3.0	1.5	3.0	1.5	2.7	1.35
	AA36-170B	17,000	20,400	2,340	6.0	3.0	1.5	3.0	1.5	2.7	1.35
	AA46-192B	19,200	23,000	3,200	8.0	4.0	2.0	4.0	2.0	3.6	1.80
	AA46-230B	23,000	27,600	3,120	8.0	4.0	2.0	4.0	2.0	3.6	1.80
	AA56-245B	24,500	29,400	4,000	10.0	5.0	2.5	5.0	2.5	4.5	2.25
	AA66-295B	29,500	35,400	4,800	12.0	6.0	3.0	6.0	3.0	5.4	2.70
	AA66-345B	34,500	41,400	4,680	12.0	6.0	3.0	6.0	3.0	5.4	2.70
4 FPI	AA14-42B	4,200	5,000	830	2.0	1.0	0.5	1.0	0.5	0.9	0.45
	AA24-84B	8,400	10,100	1,660	4.0	2.0	1.0	2.0	1.0	1.8	0.90
	AA24-105B	10,500	12,600	1,620	4.0	2.0	1.0	2.0	1.0	1.8	0.90
	AA34-130B	13,000	15,600	2,490	6.0	3.0	1.5	3.0	1.5	2.7	1.35
	AA44-170B	17,000	20,400	3,320	8.0	4.0	2.0	4.0	2.0	3.6	1.80
	AA54-215B	21,500	25,800	4,150	10.0	5.0	2.5	5.0	2.5	4.5	2.25
	AA64-255B	25,500	30,600	4,980	12.0	6.0	3.0	6.0	3.0	5.4	2.70

(1) All fan motors are wired for single phase. Standard motors are shaded pole. High efficiency PSC motors (Permanent Split Capacitor) and ECM (Electronically Commutated) motors are optional.

Ordering Information Required

It is vital that the information listed below is given with each evaporator order. Orders without this information may be delayed. Evaporators with options such as solenoid and expansion valves will not be processed until all the required information is given.

(1) Model Number

(2) Type of Motor

(3) Voltage, frequency and phase of motors and heaters (when applicable)

(4) Refrigerant type

(5) Evaporator temperature

(6) Evaporator T.D.

Electric Defrost / Specifications

	Model Number	BTUH Capacity @ 10° T.D. Evaporator Temperature -30°	-20°	-10°	+20°	CFM	Motor Amps¹ Standard 230V	Standard 460V	PSC 230V	ECM 230V	Heater Amps² 208/230V 1 PH	208/230V 3 PH	460V 1 PH	Watts
6 FPI	AE16-36B	3,400	3,600	3,700	3,900	830	1	0.5	0.5	0.45	4.4	2.6	2.2	1,000
	AE16-41B	3,900	4,100	4,300	4,800	800	1	0.5	0.5	0.45	4.4	2.6	2.2	1,000
	AE16-46B	4,400	4,600	4,800	5,800	780	1	0.5	0.5	0.45	4.4	2.6	2.2	1,000
	AE26-60B	5,700	6,000	6,200	7,000	1,540	2	1	1	0.90	7	6	3.5	1,600
	AE26-75B	7,100	7,500	7,800	8,700	1,500	2	1	1	0.90	7	6	3.5	1,600
	AE26-92B	8,700	9,200	9,600	11,500	1,560	2	1	1	0.90	8.7	7.5	4.4	2,000
	AE36-120B	11,400	12,000	12,500	14,500	2,400	3	1.5	1.5	1.35	13	11.3	6.4	3,000
	AE36-140B	13,300	14,000	14,600	17,000	2,340	3	1.5	1.5	1.35	13	11.3	6.4	3,000
	AE46-164B	15,000	16,400	17,100	19,200	3,200	4	2	2	1.80	17.4	15.1	8.7	4,000
	AE46-185B	17,600	18,500	19,200	23,000	3,120	4	2	2	1.80	17.4	15.1	8.7	4,000
	AE56-210B	20,000	21,000	21,800	24,500	4,000	5	2.5	2.5	2.25	—	18.8	10.9	5,000
	AE66-245B	23,300	24,500	25,500	29,500	4,800	6	3	3	2.70	—	22.6	13	6,000
	AE66-280B	26,600	28,000	29,100	34,500	4,680	6	3	3	2.70	—	22.6	13	6,000
4 FPI	AE14-37B	3,500	3,700	3,800	4,200	830	1	0.5	0.5	0.45	4.4	2.6	2.2	1,000
	AE24-72B	6,800	7,200	7,500	8,400	1,660	2	1	1	0.90	8.7	7.5	4.4	2,000
	AE24-85B	8,100	8,500	8,800	10,500	1,620	2	1	1	0.90	8.7	7.5	4.4	2,000
	AE34-105B	10,000	10,500	10,900	13,000	2,490	3	1.5	1.5	1.35	13	11.3	6.4	3,000
	AE44-140B	13,300	14,000	14,600	17,000	3,320	4	2	2	1.80	17.4	15.1	8.7	4,000
	AE54-180B	17,100	18,000	18,700	21,500	4,150	5	2.5	2.5	2.25	—	18.8	10.9	5,000
	AE64-215B	20,400	21,500	22,400	25,500	4,980	6	3	3	2.70	—	22.6	13	6,000

(1) All fan motors are wired for single phase. Standard motors are shaded pole. High efficiency PSC (Permanent Split Capacitor) & ECM (Electronically commutated) motors are optional.

(2) For 208/230 volt models, heaters are wired as standard for single phase on 1 through 4 fan models. 5 and 6 fan models are wired 3 phase. 460 Volt models are only available in single phase and are compatible with all 3 phase systems.

Hot Gas Defrost / Specifications

	Model Number Re-Evap	Rev. Cycle	BTUH Capacity @ 10° T.D. Evaporator Temperature -30°	-20°	-10°	+20°	CFM	Fan Motor Amps¹ Standard 115V	Standard 230V	Standard 460V	PSC 115V	PSC 230V	ECM 115V	ECM 230V	Re-Evap HEA
6 FPI	AH16-36B	AG16-36B	3,400	3,600	3,700	3,900	830	2	1	0.5	1	0.5	0.9	0.45	1A
	AH16-41B	AG16-41B	3,900	4,100	4,300	4,800	800	2	1	0.5	1	0.5	0.9	0.45	1A
	AH16-46B	AG16-46B	4,400	4,600	4,800	5,800	780	2	1	0.5	1	0.5	0.9	0.45	1A
	AH26-60B	AG26-60B	5,700	6,000	6,200	7,000	1,540	4	2	1	2	1	1.8	0.90	2A
	AH26-75B	AG26-75B	7,100	7,500	7,800	8,700	1,500	4	2	1	2	1	1.8	0.90	2A
	AH26-92B	AG26-92B	8,700	9,200	9,600	11,500	1,560	4	2	1	2	1	1.8	0.90	2A
	AH36-120B	AG36-120B	11,400	12,000	12,500	14,500	2,400	6	3	1.5	3	1.5	2.7	1.35	3A
	AH36-140B	AG36-140B	13,300	14,000	14,600	17,000	2,340	6	3	1.5	3	1.5	2.7	1.35	3A
	AH46-164B	AG46-164B	15,000	16,400	17,100	19,200	3,200	8	4	2	4	2	3.6	1.80	3A
	AH46-185B	AG46-185B	17,600	18,500	19,200	23,000	3,120	8	4	2	4	2	3.6	1.80	3A
	AH56-210B	AG56-210B	20,000	21,000	21,800	24,500	4,000	10	5	2.5	5	2.5	4.5	2.25	3A
	AH66-245B	AG66-245B	23,300	24,500	25,500	29,500	4,800	12	6	3	6	3	5.4	2.70	4A
	AH66-280B	AG66-280B	26,600	28,000	29,100	34,500	4,680	12	6	3	6	3	5.4	2.70	4A
4 FPI	AH14-37B	AG14-37B	3,500	3,700	3,800	4,200	830	2	1	0.5	1	0.5	0.9	0.45	1A
	AH24-72B	AG24-72B	6,800	7,200	7,500	8,400	1,660	4	2	1	2	1	1.8	0.90	2A
	AH24-85B	AG24-85B	8,100	8,500	8,800	10,500	1,620	4	2	1	2	1	1.8	0.90	2A
	AH34-105B	AG34-105B	10,000	10,500	10,900	13,000	2,490	6	3	1.5	3	1.5	2.7	1.35	2A
	AH44-140B	AG44-140B	13,300	14,000	14,600	17,000	3,320	8	4	2	4	2	3.6	1.80	3A
	AH54-180B	AG54-180B	17,100	18,000	18,700	21,500	4,150	10	5	2.5	5	2.5	4.5	2.25	3A
	AH64-215B	AG64-215B	20,400	21,500	22,400	25,500	4,980	12	6	3	6	3	5.4	2.70	3A

(1) All fan motors are wired for single phase operation

Russell All-Temp²B

Physical Data

Models		TXV TYPE	Refrigerant Connections				No. of Hangers	Dimensions (Inches)				Ship Wt. (lbs.)
AA	AE/AH/AG		All Liquid†	AA Suction	AE/AH/AG Suction	HG‡		A	B	C	W	
18-41B	—	EXT	1/2 ODS	5/8 ODS	—	—	2	19	—	—	27½	33
18-53B	—	EXT	1/2	5/8	—	—	2	19	—	—	27½	34
18-66B	—	EXT	1/2	5/8	—	—	2	19	—	—	27½	36
28-76B	—	EXT	1/2	5/8	—	—	2	33	—	—	41½	48
28-97B	—	EXT	1/2	7/8	—	—	2	33	—	—	41½	51
28-106B	—	EXT	1/2	7/8	—	—	2	37	—	—	45½	58
28-122B	—	EXT	1/2	7/8	—	—	2	33	—	—	41½	60
28-134B	—	EXT	1/2	7/8	—	—	2	37	—	—	45½	63
38-160B	—	EXT	1/2	1-1/8	—	—	2	55	—	—	63½	79
38-195B	—	EXT	1/2	1-1/8	—	—	2	55	—	—	63½	84
48-212B	—	EXT	1/2	1-1/8	—	—	3	36½	36½	—	81½	254
48-264B	—	EXT	1/2	1-1/8	—	—	3	36½	36½	—	81½	262
58-275B	—	EXT	1/2	1-1/8	—	—	3	54½	36½	—	99½	312
68-318B	—	EXT	1/2	1-1/8	—	—	4	36½	36	36½	117½	354
68-390B	—	EXT	1/2	1-1/8	—	—	4	36½	36	36½	117½	370
16-39B	16-36B	EXT	1/2 ODS	5/8 ODS	5/8 ODS	5/8 ODS	2	19	—	—	27½	41
16-48B	16-41B	EXT	1/2	5/8	5/8	5/8	2	19	—	—	27½	44
16-58B	16-46B	EXT	1/2	5/8	5/8	5/8	2	19	—	—	27½	47
26-70B	26-60B	EXT	1/2	5/8	7/8	5/8	2	33	—	—	41½	54
26-87B	26-75B	EXT	1/2	7/8	7/8	5/8	2	33	—	—	41½	55
26-115B	26-92B	EXT	1/2	7/8	7/8	5/8	2	37	—	—	45½	62
36-145B	36-120B	EXT	1/2	7/8	7/8	5/8	2	55	—	—	63½	78
36-170B	36-140B	EXT	1/2	1-1/8	1-1/8	5/8	2	55	—	—	63½	85
46-192B	46-164B	EXT	1/2	1-1/8	1-1/8	5/8	3	36½	36½	—	81½	255
46-230B	46-185B	EXT	1/2	1-1/8	1-1/8	5/8	3	36½	36½	—	81½	265
56-245B	56-210B	EXT	1/2	1-1/8	1-1/8	5/8	3	54½	36½	—	99½	306
66-295B	66-245B	EXT	1/2	1-1/8	1-1/8	5/8	4	36½	36	36½	117½	353
66-345B	66-280B	EXT	1/2	1-1/8	1-1/8	5/8	4	36½	36	36½	117½	368
14-42B	14-37B	EXT	1/2 ODS	5/8 ODS	5/8 ODS	5/8 ODS	2	19	—	—	27½	42
24-84B	24-72B	EXT	1/2	7/8	7/8	5/8	2	37	—	—	45½	49
24-105B	24-85B	EXT	1/2	7/8	7/8	5/8	2	37	—	—	45½	55
34-130B	34-105B	EXT	1/2	7/8	7/8	5/8	2	55	—	—	63½	79
44-170B	44-140B	EXT	1/2	7/8	1-1/8	5/8	3	36½	36½	—	81½	251
54-215B	54-180B	EXT	1/2	1-1/8	1-1/8	5/8	3	54½	36½	—	99½	299
64-255B	64-215B	EXT	1/2	1-1/8	1-1/8	5/8	4	36½	36	36½	117½	340

† Optional Extended Flare Kit available upon request for field installation.
‡ Hot Gas connections only apply to the AH models.

Installation Notes:
(1) Install 12” away from back wall.
(2) Drain connection on AA and AE units are centered on drain pan; and on the left end (facing air discharge) on AH and AG units.
(3) For long air throw requirements, specify high throw fan guard.
(4) Unit height at drain end of hot gas models is as follows: 1,2, and 3 fan models = 15-7/8”, 4,5, and 6 fan models = 16-1/4”.

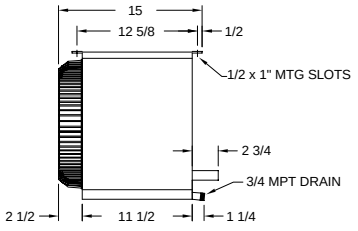

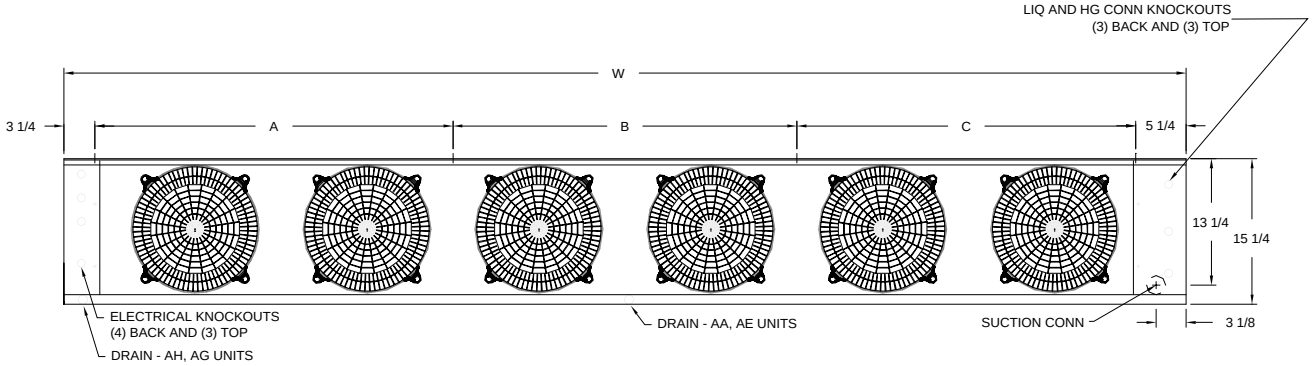

Electric Defrost Kits

Model Number	1 Unit Cooler Per System		2 Unit Coolers Per System		3 Unit Coolers Per System	
	230V	460V	230V	460V	230V	460V
AE16-36B	ED-10	ED-12	ED-20*	ED-22	ED-30	ED-32
AE16-41B	ED-10	ED-12	ED-20*	ED-22	ED-30	ED-32
AE16-46B	ED-10	ED-12	ED-20*	ED-22	ED-30	ED-32
AE26-60B	ED-10	ED-12	ED-20*	ED-22	ED-30	ED-32
AE26-75B	ED-10	ED-12	ED-20*	ED-22	ED-30	ED-32
AE26-92B	ED-10	ED-12	ED-20*	ED-22	ED-30	ED-32
AE36-120B	ED-10	ED-12	ED-20*	ED-22	ED-33	ED-32
AE36-140B	ED-10	ED-12	ED-20*	ED-22	ED-33	ED-32
AE46-164B	ED-10	ED-12	ED-23*	ED-22	ED-35	ED-32
AE46-185B	ED-10	ED-12	ED-23*	ED-22	ED-35	ED-32
AE56-210B	ED-11	ED-12	ED-23*	ED-22	ED-35	ED-34
AE66-245B	ED-11	ED-12	ED-23*	ED-22	ED-35	ED-34
AE66-280B	ED-11	ED-12	ED-23*	ED-22	ED-35	ED-34
AE14-37B	ED-10	ED-12	ED-20*	ED-22	ED-30	ED-32
AE24-72B	ED-10	ED-12	ED-20*	ED-22	ED-30	ED-32
AE24-85B	ED-10	ED-12	ED-20*	ED-22	ED-30	ED-32
AE34-105B	ED-10	ED-12	ED-20*	ED-22	ED-33	ED-32
AE44-140B	ED-10	ED-12	ED-23*	ED-22	ED-35	ED-32
AE54-180B	ED-11	ED-12	ED-23*	ED-22	ED-35	ED-34
AE64-215B	ED-11	ED-12	ED-23*	ED-22	ED-35	ED-34

Electric defrost kits consist of components that are necessary to control the defrost cycle. The optional kits are available as a factory installed option when ordered with a condensing unit. Not all Ed-Kits are available for all condensing unit models. The contents of each kit is described below, along with the function of each component.

* - 1/2 through 3 HP models require ED-210 or ED-213.

Electric Defrost Kits

KIT NO.	TIMER	AUXILIARY SWITCH	BLOCK-OUT RELAY	DEFROST CONTACTOR	FAN CONTACTOR	SEQUENCING RELAY
ED10-230/1	1	—	1-30A	—	—	—
ED11-230/3	1	1	—	1-30A	—	—
ED12-460/3	1	1	—	1-30A	1-25A	—
[1]ED210-230/1	1	—	1-30A	—	—	—
[1]ED213-230/1	1	1	—	1-50A	—	—
[1]ED213-230/3	1	1	—	1-50A	—	—
ED20-230/1	1	—	1-30A	—	—	2
ED22-460/3	1	1	—	2-15A	1-25A	2
ED23-230/1	1	1	—	2-25A	—	2
ED23-230/3	1	1	—	2-25A	—	2
ED30-230/1	1	—	1-30A	—	—	3
ED32-460/3	1	1	—	3-10A	1-25A	3
ED33-230/1	1	1	—	3-16A	—	3
ED34-460/3	1	1	—	3-16A	1-25A	3
ED35-230/1	1	1	—	3-33A	—	3
ED35-230/3	1	1	—	3-33A	—	3

Timer: Initiates the defrost cycle. Also used as a override protection for defrost termination.

Auxiliary Switch: Is mounted on the compressor contactor and prevents the defrost contactor from operating whenever the compressor is energized.

Block-Out Relay: Serves the same function as auxiliary switch. Used when defrost contactor is not required (lower wattage single phase only).

Defrost Contactor: Carries amperage load for heaters.

Fan Contactor: Used with 460V motors or when 230V motors are wired 3 phase.

Sequencing Relays: Provides interconnection of multiple unit coolers on a single system so that each unit cooler is allowed to individually terminate defrost on temperature.

[1] For use with 2 evaporators , 1/2 through 3 HP R-series systems ONLY!

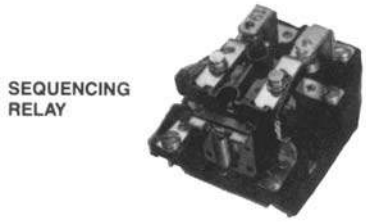

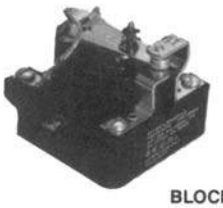







Russell All-Temp²B

1/2 Through 80 HP

COMPLETE REFRIGERATION PACKAGES

- AIR DEFROST
- ELECTRIC DEFROST
- HOT GAS DEFROST
- RUSSAVER
- SIERRA
- HIGH SIERRA

CONTACT YOUR RUSSELL REPRESENATIVE FOR DETAILS

All-Temp²B
Low Profile Unit coolers



Inter-Temp
Medium Profile Unit Coolers



Ultra-Temp
High Capacity Warehouse Unit Coolers

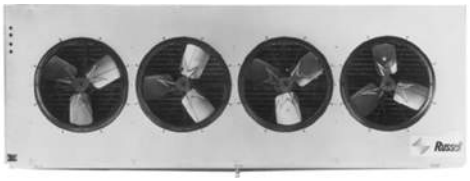

MiniCon
Cond. units 1/2 - 6 HP



D-Series
Condensing Units 3-22 HP



V-Series
Condensing Units 20-30 HP

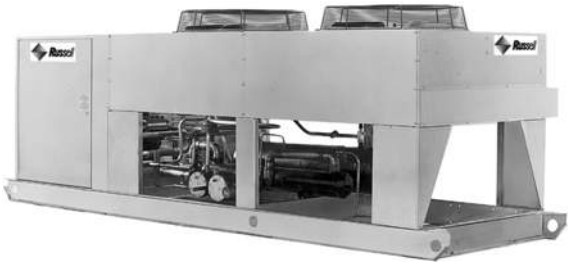

Russell

Visit us on the Web: **www.russellcoil.com**
221 S. Berry St., P.O. Box 1030, Brea, CA 92822-1030 • Tel: (714) 529-1935 • Fax: (714) 529-7203

PENTAIR

Raychem GARDIAN
PREASSEMBLED HEATING CABLE

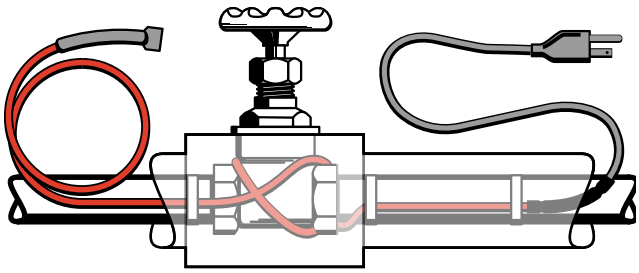

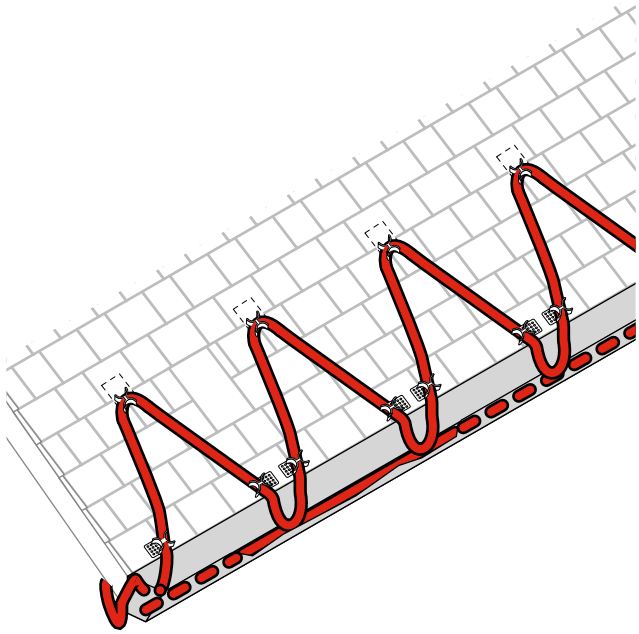

PRODUCT OVERVIEW

Raychem Gardian pre-assembled self-regulating heating cables are designed for residential and commercial metal and plastic pipe freeze protection and roof and gutter de-icing applications. 120 V Gardian cables are available in 6, 12, 18, 24, 50, 75 and 100 foot lengths, and each comes assembled with a 30-inch power cord and plug. 120 V Gardian cables are ideal for smaller jobs such as roof and gutter de-icing on porches and overhangs, as well as for pipe freeze protection on pipes up to 2-½ inches in diameter.

240 V Gardian cables are available in 6, 12, 18, and 24 foot lengths and each come assembled with a 30-inch power cord for terminating in a junction box. Due to their short lengths, 240 V Gardian cables are designed only for pipe freeze protection applications on pipes up to 2-½ inches in diameter.

GARDIAN PREASSEMBLED HEATING CABLE SPECIFICATIONS

Catalog number	W51-6P	W52-6L
	W51-12P	W52-12L
	W51-18P	W52-18L
	W51-24P	W52-24L
	W51-50P	
	W51-75P	
	W51-100P	
Service voltage	120 V	208-240 V
Application	Pipe freeze protection and roof and gutter de-icing	Pipe freeze protection
Nominal power output on pipes at 40°F (W/ft)	6	6

GARDIAN

GARDIAN PREASSEMBLED HEATING CABLE SPECIFICATIONS

Nominal power output in ice or snow at 32°F (W/ft)	8	N/A
Maximum cable width (in)	0.45	0.45
Maximum cable thickness (in)	0.24	0.24
Maximum exposure temperature (°F)	150	150
Maximum bend radius	5/8 in (16 mm)	5/8 in (16 mm)

APPROVALS

-WS -W

GROUND-FAULT PROTECTION

To minimize the danger of fire from sustained electrical arcing if the heating cable is damaged or improperly installed, and to comply with the requirements of Pentair Thermal Management, agency certifications, and national electrical codes, 30-mA equipment or 5-mA personnel ground-fault protection must be used on each Gardian heating cable branch circuit. Arcing may not be stopped by conventional circuit protection.

NOMINAL POWER TEMPERATURE CURVE FOR PIPES

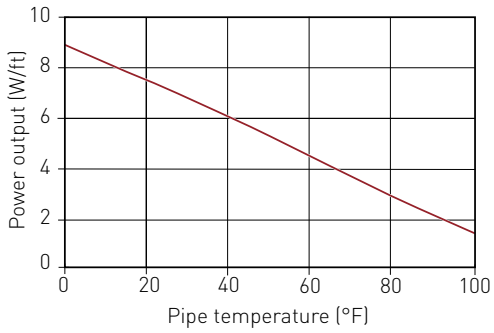

PRODUCT SELECTION

Pipe freeze protection

Use the tables to the right to select the correct heating cable length. Add 1 foot to the pipe length for each valve or spigot in the pipe system.

Table 1 Metal Pipes

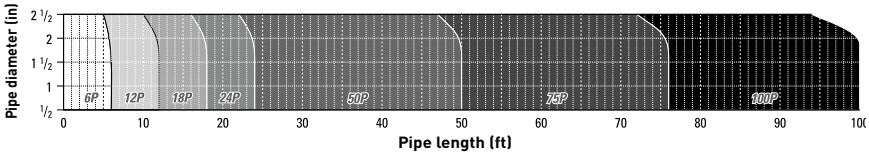

Table 2 Plastic Pipes

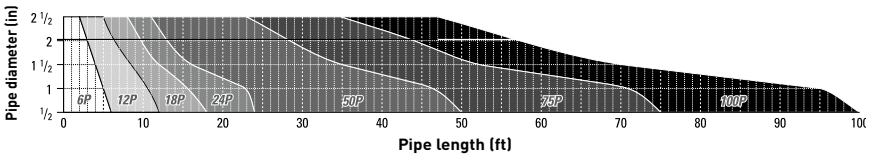

Add 1 foot to the pipe length for each valve or spigot in the pipe system.

ROOF AND GUTTER DE-ICING

Find the number of feet of heating cable needed per foot of roof edge in table to the right. Then, calculate the amount of total heating cable length you need using the following formula:

Length = **A + B + C + D**

A Roof edge length (ft) x Feet of heating cable per foot of roof edge

B Roof edge (ft) x 0.5*

C Total gutter length (ft)

D Total downspout length (ft) + 1 (ft)

= Total heating cable length (ft)

*Roof extension: This length allows the heating cable to extend into the gutter to provide a continuous drain path, or where no gutters are present, extends beyond the roof edge to form a drip loop.

Length of Cable Per Foot of Roof Edge (ft)

		Standing Seam Metal Roof	
Overhang (in)	**Standard Roof**	**18 inch Seam**	**24 inch Seam**
None*	2	2.5	2
12 in	2.8	2.8	2.4
24 in	3.8	3.6	2.9
36 in	4.8	4.3	3.6

* Gutter required

Note: Pentair Thermal Management recommends a gutter and downspouts to provide a continuous path for melted water.

- If downspout is in the middle of the run, loop the Gardian down and back up. Double the length of the downspout for determining the length of Gardian to install.
- For valleys, run the heating cable two thirds of the way up and down the valley.
- For gutters 5-6 inches wide use 2 runs of heating cable.
- For gutters wider than 6 inches contact Pentair Thermal Management, (800) 545-6258.

Item # _____

Job _____

SUPER ADJUSTABLE™ SUPER ERECTA SHELF®
WIRE SHELVING

Super Adjustable™ Super Erecta Wire Shelving is the most advanced and innovative wire storage system available.

- **Maximum Space Utilization:** The Corner Release System encourages repositioning of shelves during initial assembly to reclaim wasted vertical space. In some cases, reclaimed vertical space will allow an extra shelving tier to be added to the storage unit resulting in a 25% increase in storage capacity!
- **Easily Assembled:** The unique Corner Release System enables quick and easy repositioning of shelves during the initial set up to accommodate different package or container sizes. "Total Assembly" is complete only after the shelves are properly spaced to maximize storage. SiteSelect™ Posts, with the double-groove visual guide feature, have circular grooves at 1" (25mm) increments and are numbered at 2" (51mm) intervals to easily identify proper shelf locations.
- **Easily Adjustable:** The unique shelf design and SiteSelect™ Posts enable "tool-free", quick adjustment at 1" (25mm) increments along the entire height of the post.
- **Improved Rigidity:** An enhanced Corner Release System has made Super Adjustable™ the most rigid, easily adjustable shelving system ever.
- **Strong:** Super Adjustable™ shelves hold as much weight as traditional Super Erecta wire shelving. Stationary units hold a maximum of 2,000 lb. (910kg). Maximum weight capacity per shelf (48" [1219mm] or shorter = 800 lb. [364kg]; longer than 48" [1219mm] = 600 lb. [273kg])
- **Choice of Finishes:** Super Adjustable™ Super Erecta shelving is available in a variety of finishes: chrome-plated for dry storage; Metroseal 3™ with antimicrobial product protection and Type 304 stainless steel for corrosive environments.
- **Accessories:** Compatible with the entire system of Super Erecta shelves and accessories. See Catalog Sheets 10.04, 10.05, 10.06 for more information.



Dry Storage — Chrome

NSF



Corner Release System

Super Adjustable™ Advantage . . .



Easy "no tool" shelf adjustment

1" 25mm spacing minimizes dead space

Efficient use of space allows more storage levels to be added.

Storage efficiency can increase by 25% or more!



*MICROBAN® and the MICROBAN® symbol are registered trademarks of the Microban Products Company, Huntersville, NC.

InterMetro Industries Corporation
North Washington Street
Wilkes-Barre, PA 18705
www.metro.com

10.01A

Job _____

SUPER ADJUSTABLE™ SUPER ERECTA SHELF®
WIRE SHELVING

Dimensions

Super Adjustable™ Super Erecta Wire Shelving

Model No. Chrome	Model No. Metroseal 3	Model No. Stainless	Shelf Width/Length (in.)	(mm)	Approx. Pkd. Wt. (lbs.)	(kg)
A1424NC	A1424NK3	A1424NS	14x24	355x610	6	2.7
A1430NC	A1430NK3	A1430NS	14x30	355x760	7	3.2
A1436NC	A1436NK3	A1436NS	14x36	355x914	8	3.6
A1442NC	A1442NK3	A1442NS	14x42	355x1066	9 1/2	4.3
A1448NC	A1448NK3	A1448NS	14x48	355x1219	10 1/2	4.7
A1460NC	A1460NK3	A1460NS	14x60	355x1524	14	6.3
A1472NC	A1472NK3	A1472NS	14x72	355x1829	17	7.7
A1824NC	A1824NK3	A1824NS	18x24	457x610	7	3.2
A1830NC	A1830NK3	A1830NS	18x30	457x760	8	3.6
A1836NC	A1836NK3	A1836NS	18x36	457x914	9 1/2	4.3
A1842NC	A1842NK3	A1842NS	18x42	457x1066	11	5.0
A1848NC	A1848NK3	A1848NS	18x48	457x1219	12	5.4
A1854NC	A1854NK3	A1854NS	18x54	457x1370	14 1/2	6.6
A1860NC	A1860NK3	A1860NS	18x60	457x1524	17	7.7
A1872NC	A1872NK3	A1872NS	18x72	457x1829	20	9.1
A2124NC	A2124NK3	A2124NS	21x24	530x610	8	3.6
A2130NC	A2130NK3	A2130NS	21x30	530x760	9	4.1
A2136NC	A2136NK3	A2136NS	21x36	530x914	11	5.0
A2142NC	A2142NK3	A2142NS	21x42	530x1066	12	5.4
A2148NC	A2148NK3	A2148NS	21x48	530x1219	14	6.4
A2154NC	A2154NK3	A2154NS	21x54	530x1370	16	7.3
A2160NC	A2160NK3	A2160NS	21x60	530x1524	18	8.2
A2172NC	A2172NK3	A2172NS	21x72	530x1829	24	10.9
A2424NC	A2424NK3	A2424NS	24x24	610x610	9	4.1
A2430NC	A2430NK3	A2430NS	24x30	610x760	11	5.0
A2436NC	A2436NK3	A2436NS	24x36	610x914	13	5.9
A2442NC	A2442NK3	A2442NS	24x42	610x1066	15	6.8
A2448NC	A2448NK3	A2448NS	24x48	610x1219	16	7.3
A2454NC	A2454NK3	A2454NS	24x54	610x1370	18	8.6
A2460NC	A2460NK3	A2460NS	24x60	610x1524	21	9.5
A2472NC	A2472NK3	A2472NS	24x72	610x1829	26	11.8
A3036NC			30x36	760x914	15	6.8
A3048NC			30x48	760x1219	21	9.5
A3060NC			30x60	760x1524	26 1/2	11.8
A3072NC			30x72	760x1829	31	14.0
A3636NC			36x36	914x914	18	8.2
A3648NC			36x48	914x1219	23	10.4
A3660NC			36x60	914x1524	29	13.1
A3672NC			36x72	914x1829	34 1/2	15.4

NOTE: MICROBAN® protects the Metroseal 3 coating from bacteria, mold, mildew and fungi that cause odors, stains and product degradation. For Metroseal 3 shelving information see sheet #10.10A.



All Environments — Metroseal 3™ with *Microban® Antimicrobial Product Protection

Mobile Options



Stem Casters



Dolly Trucks



Replacement Parts
Each kit includes components for one original Super Adjustable or Super Adjustable shelf; (4) wedges, (4) sleeves, (4) shelf releases.
Model No. SAKITA2

SiteSelect™ Posts

STATIONARY Actual Height* (in.)	(mm)	Model No. Plated	Model No. Metroseal 3	Model No. Stainless	MOBILE Actual Height* (in.)	(mm)	Model No. Plated	Model No. Metroseal 3	Model No. Stainless	Approx. Pkd. Wt. (lbs.)	(kg)
7 3/8	187	7P	7PK3	7PS	6 3/4	171	7UP	7UPK3	7UPS	1/2	0.3
14 3/8	365	13P	13PK3	13PS	13 3/4	349	13UP	13UPK3	13UPS	1	0.5
28 3/8	720	27P	27PK3	27PS	27 3/4	704	27UP	27UPK3	27UPS	1 3/4	0.75
34 3/8	873	33P	33PK3	33PS	33 3/4	857	33UP	33UPK3	33UPS	2	0.9
54 7/16	1382	54P	54PK3	54PS	53 13/16	1366	54UP	54UPK3	54UPS	3	1.4
62 7/16	1585	63P	63PK3	63PS	61 13/16	1570	63UP	63UPK3	63UPS	3 1/2	1.6
—	—	—	—	—	69 3/4	1771	70UP	—	—	3 3/4	1.7
74 1/2	1892	74P	74PK3	74PS	73 7/8	1876	74UP	74UPK3	74UPS	4	1.8
86 1/2	2197	86P	86PK3	86PS	85 7/8	2181	86UP	86UPK3	86UPS	4 1/2	2.0
96 1/2	2450	**96P	96PK3	96PS						5 1/2	2.5

*Actual height for the stationary post includes the post cap and the leveling bolt completely tightened.

Important: When ordering by components remember that for maximum stability, units should be kept as wide and low as possible.

All Metro Catalog Sheets are available on our Web Site: **www.metro.com**

InterMetro Industries Corporation
North Washington Street, Wilkes-Barre, PA 18705
Phone: 570-825-2741 • Fax: 570-825-2852

For Product Information:
U.S. and Canada: 1-800-992-1776
Outside U.S. and Canada: www.metro.com/contactus

L02-006A
Printed in U.S.A. Rev. 2/17

Information and specifications are subject to change without notice. Please confirm at time of order.

Copyright © 2017 InterMetro Industries Corp.

SUPER ADJUSTABLE™ SUPER ERECTA SHELF®
Adjustable Wire Shelving

METRO®

We put space to work.

Item # _____

Job _____

MetroMax 4 Drying Racks combine the corrosion protection and strength of MetroMax 4 with the convenience of a drying rack unit that efficiently sorts and holds pots, pans and trays while they dry to prevent wet nesting.

Three Tier Tray Rack:
36" (914mm) and 48" (1219mm) lengths.
Each consists of (3) MetroMax 4 shelf frames, (4) 63" (1600mm) mobile posts, (4) corrosion resistant polymer horn casters (two swivel, two brake), (3) tray racks,

Four Tier Bulk Drying and Tray Rack:
36" (914mm) and 48" (1219mm) lengths.
Each consists of (3) MetroMax 4 shelf frames, (1) MetroMax 4 shelf, (4) 63" (1600mm) mobile posts, (4) corrosion resistant polymer horn casters (two swivel, two brake), (2) stainless steel drop-in racks, (1) tray rack.

Four Tier Tray and Steam Pan Rack:
36" (914mm) and 48" (1219mm) lengths.
Each consists of (4) MetroMax 4 shelf frames, (4) 63" (1600mm) mobile posts, (4) corrosion resistant polymer horn casters (two swivel, two brake), (2) tray racks, (2) steam pan racks.

Key Benefits
- **Promotes food safety** by preventing wet nesting, where two wet/damp items are nested together preventing proper airflow.
- **Superior air circulation:** Fast drying of trays, cutting boards, pans, lids, pots and all sink items.
- **"Hold strong" slots:** Tray and Pan Racks have tall slots to assure trays, cutting boards, steam pans, and other tall items don't tip over while being loaded/unloaded and during use.
- **Wobble Free, Worry Free mobility:** Sturdy carts are easy to maneuver with swivel polymer casters.
- **Easy to Clean:** Shelf mats, posts and epoxy coated drying racks have built-in Microban antimicrobial product protection. It keeps the product "cleaner between cleanings".
- **Superior Organization:** Optional hanging rails and grids help sort and dry utensils and other vessels with long handles.
- **NSF Listed**



MAX4-PR48VX2



MAX4-PR48VX3



MAX4-PR48VX4

PROTECTION THAT LIVES ON MICROBAN

Inhibits the growth of stain and odor causing bacteria. Microban® does not protect users from food borne illness. Normal cleaning practices should be maintained. Microban is a registered trademark of Microban Products Company.

All Metro Catalog Sheets are available on our website: **www.metro.com**

METRO®

InterMetro Industries Corporation
North Washington Street, Wilkes-Barre, PA 18705

Product Information. U.S. and Canada: 1.800.992.1776
Outside U.S. and Canada: www.metro.com/contactus

LO2-231
Printed in U.S.A. 3/19

Information and specifications are subject to change without notice. Please confirm at time of order.

Copyright © 2019 InterMetro Industries Corp.

MetroMax 4 Drying Racks

Specifications - Shelving Units, Drop-Ins, Tray Racks, Pan Racks

- **Longitudinal Beams & Posts:** Pultrusions - continuous glass fibers and thermo set resin composite with built-in Microban antimicrobial product protection. Exterior surfaces are high-impact thermoplastic resin.
- **End Beams, Adjustable Foot & Socket:** Injection molded polyester thermoplastic resin with glass reinforcement.
- **Drop In Rack** -Electro-Polished Type 304 Stainless Steel
- **Cutting Board/Tray Drying Rack:** Corrosion resistant taupe epoxy coated steel with built-in Microban product protection and rigid PVC (non phtalate) extrusions.
- **Shelf Mats:** Polypropylene. Mats contain Microban antimicrobial product protection.
- **Load Capacity:** 200 lbs. (91kg) per drop-in rack, tray rack, or pan rack.
- **Stationary Load Capacity:** 2000lbs. (907kg)
- **Mobile Load Capacity:** 750 lbs. (340kg) per unit
- **Polymer Casters:** 2 swivel, 2 swivel with brakes. Corrosion-resistant, polymer horn, stainless steel axle and hardware. 5" (127mm) diameter.



MAX4-PR36VX2



MAX4-PR36VX3



MAX4-PR36VX4

Dimensions

MetroMax 4 Mobile Drying Rack Units

Three Tray Racks (three tier unit)

Model No.	Nominal Width (in.)	Nominal Width (mm)	Nominal Length (in.)	Nominal Length (mm)	Nominal Height (in.)	Nominal Height (mm)	Approx. Pkd. Wt. (lbs.)	Approx. Pkd. Wt. (kg)
MAX4-PR36VX2	24	610	36	914	68	1702	72.7	33.0
MAX4-PR48VX2	24	610	48	1219	68	1702	86.9	39.4

Two SS Drop-ins, One Tray Rack, One Bulk Shelf (4-tier)

Model No.	Nominal Width (in.)	Nominal Width (mm)	Nominal Length (in.)	Nominal Length (mm)	Nominal Height (in.)	Nominal Height (mm)	Approx. Pkd. Wt. (lbs.)	Approx. Pkd. Wt. (kg)
MAX4-PR36VX3	24	610	36	914	68	1702	65.0	29.5
MAX4-PR48VX3	24	610	48	1219	68	1702	76.8	34.8

Two Tray Racks and Two Pan Racks (4-tier)

Model No.	Nominal Width (in.)	Nominal Width (mm)	Nominal Length (in.)	Nominal Length (mm)	Nominal Height (in.)	Nominal Height (mm)	Approx. Pkd. Wt. (lbs.)	Approx. Pkd. Wt. (kg)
MAX4-PR36VX4	24	610	36	914	68	1702	80.6	36.5
MAX4-PR48VX4	24	610	48	1219	68	1702	95.3	43.2

Note: For the actual dimensions for mobile units, add 2" (51mm) to the nominal dimension to account for the bumpers.

MetroMax 4 Drying Racks



Tip: Convert a MetroMax 4 shelf to an open frame by removing the shelf mat sections.



XTR2436XE

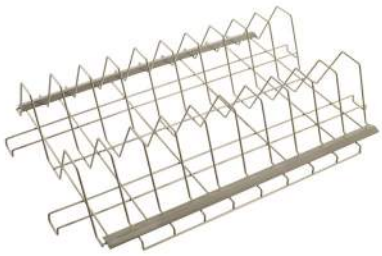

XTR2436XEA

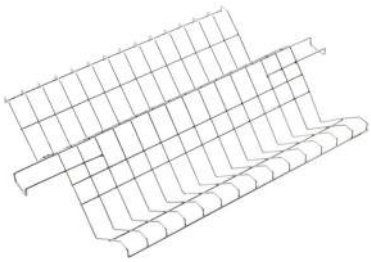

MAX4-DR36S

Cutting Board & Tray Drying Rack Accessories

- Mount to MetroMax 4 open shelf frames (no shelf mats), open grid and solid MetroMax i shelves, MetroMax i open shelf frames, MetroMax Q shelves, Super Erecta Pro, and Super Erecta.
- 1 1/8" (28mm) or 3" (76mm) slot spacing available.
- Polymer glide strips provide an impact resistant surface for long life.

Model No.	Fits Shelf or Frame (in.)	(mm)	Upright Spacing (in.)	(mm)	Upright Height (in.)	(mm)	Tray Capacity	Approx. Pkd. Wt. (lbs.)	(kg)
XTR2436XE	24x36	610x914	1 1/8	28	6	150	24	14.7	6.7
XTR2448XE	24x48	610x1219	1 1/8	28	6	150	34	19.8	9.0
XTR2460XE	24x60	610x1524	1 1/8	28	6	150	43	25.4	11.5
XTR2436XEA	24x36	610x914	3	76	6	150	10	9.9	4.5
XTR2448XEA	24x48	610x1219	3	76	6	150	14	12.9	5.8
XTR2460XEA	24x60	610x1524	3	76	6	150	17	16.4	7.4

Type 304 Stainless Drop-In Racks (for MetroMax 4 only)

- Drop-ins (models "MAX4-") require a four-sided MetroMax 4 frame.
- A drop-in rack can be added to a standard MetroMax 4 shelf by removing the shelf mats and using the shelf frame.

Model No.	Fits Shelf (in.)	(mm)	Height (in.)	(mm)	Approx. Pkd. Wt. (lbs.)	(kg)
MAX4-DR36S	24x36	610x914	33 7/8	860		
MAX4-DR48S	24x48	610x1219	45 7/8	1165		

MetroMax 4 open shelf frames

- Open shelf frames accomodate the drop-ins, tray racks, and pan racks.
- Bag of 4 wedges included.
- A standard MetroMax 4 may be converted to a frame by removing all shelf mat sections.

Model No.	Fits Shelf or Frame (in.)	(mm)	Approx. Pkd. Wt. (lbs.)	(kg)
MAX4-4F2436	24x36	610x914	6.9	3.1
MAX4-4F2448	24x48	610x1219	8.6	3.9

Drip Tray - for a MetroMax i frame or shelf.

- Patent pending water collection accessory is compatible with MetroMax i.
- Consult Spec Sheet 9.32b to learn how to integrate this accessory and its related MetroMax i shelf or shelf frame to a MetroMax 4 unit.



Drip Tray Mounted to a MetroMax i 24x36" (610x914mm) Frame. Steam Pan not included.

Job _____

MetroMax 4 Drying Racks

We put space to work.

Sorting Pegs and Hanging Accessories

6" Tall *(152mm)* Sorting Pegs

- Installs to any open grid polymer Metro shelf
- Pack of 8 Pegs
- Can be used to manage steam pans 4" (102mm) and deeper
- Material: Mineral reinforced polypropylene
- Model No. **X6PEG-8PK**

X6PEG-8PK



X8



Hanger Rail with Add-a-Collar Brackets and Accessory Hooks

- Add-a-collars and Hanger Rails combine to form a mounting rail for hooks.
- Easily retrofitable to any MetroMax shelving (2010 to present day).
- Unique design installs easily without tools. No disassembly required.
- 5" hooks manage larger utensils and are designed for use in exposed areas. Designed to mount on a hanger rail only.
- Material: Type 304 Stainless Steel
- Hanger rails are also compatible with SmartWall Hooks. (HK23C, HK25C, HK26C, chrome plated, see spec sheet 10.43)



Model No.	Description	Nominal Width (in.)	Nominal Width (mm)	Nominal Length (in.)	Nominal Length (mm)	Nominal Height (in.)	Nominal Height (mm)	Approx. Pkd. Wt. (lbs.)	Approx. Pkd. Wt. (kg)
XHR24S	24" Hanger Rail	24	610	-	-	1 1/8	29	1	0.45
XACS-2PK	Pack of 2 add-a-collars and wedges	2	51	2	51	2 1/4	57	0.5	0.2
X5HK-2PK	Hooks for hanger rail, 2-pack	1	25	5*	127	-	-	0.5	0.2

Note: Add-a-collars mount using MQ9985 wedges (included).
*Hooks extend from the hanger rail approx. 5 inches (127mm).

Grid Mounting Kit for MetroMax shelving

- Add-a-collars, grid spacer brackets, and Metro wire grids combine to form a hanging grid solution for MetroMax shelving.
- Grid kit consists of (4) Add-a-collars with wedges and (4) grid spacer brackets. Grids and grid accessories are sold separately. See spec sheet 10.43 for options.
- Material: Type 304 Stainless Steel



XHR24S

Model No.	Description	Approx. Pkd. Wt. (lbs.)	Approx. Pkd. Wt. (kg)
XACS-GRID	Kit for mounting a grid to a MetroMax unit	1.2	0.5
WG2436K3	Grid, 24x36, Metroseal 3	12.0	5.4
WG2448K3	Grid, 24x48, Metroseal 3	15.5	7.0



XACS-2PK





XACS-GRID



X2

X5HK-2PK

an Ali Group Company

The Spirit of Excellence

T&S BRASS AND BRONZE WORKS, INC.
2 Saddleback Cove / P.O. Box 1088
Travelers Rest, SC 29690

Travelers Rest, SC: 800-476-4103 • Simi Valley, CA: 800-423-0150 • Fax: 864-834-3518 • www.tsbrass.com

Model No.
B-3952-01

Item No.

This Space for Architect/Engineer Approval

Job Name_____Date_____

Model Specified_____ Quantity_____

Customer/Wholesaler_____

Contractor_____

Architect/Engineer_____

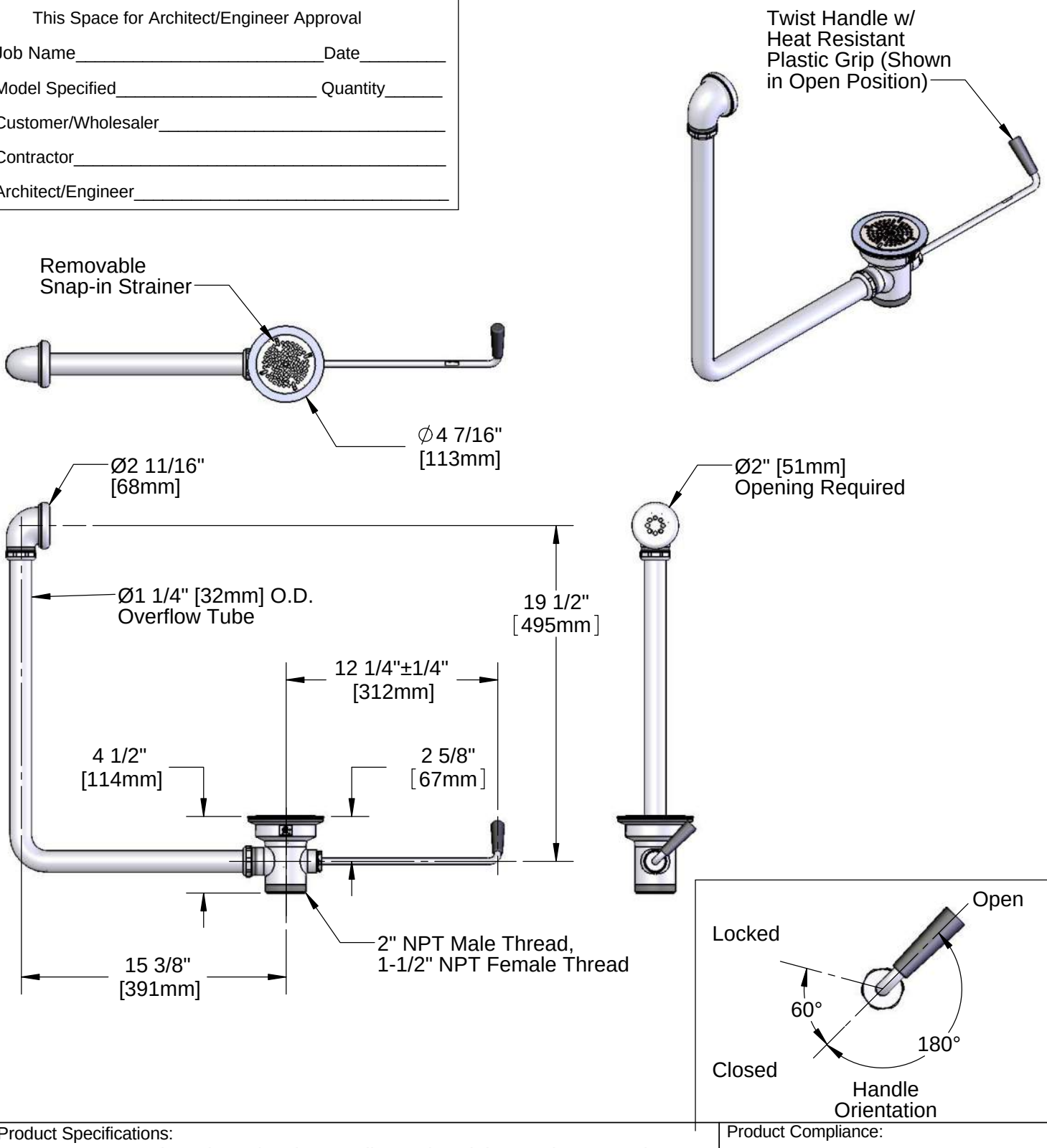

Product Specifications:
Rotary Waste Drain Valve w/ Twist Handle, 3 1/2" Sink Opening, 2" Male NPT / 1-1/2" Female NPT Outlet & Overflow Tube & Head

Product Compliance:
ASME A112.18.2 / CSA B125.2

Drawn:	KJG	Checked:	JRM	Approved:	JHB	Date:	08/28/14	Scale:	1:8	Sheet: 1 of 2

T&S BRASS AND BRONZE WORKS, INC.
2 Saddleback Cove / P.O. Box 1088
Travelers Rest, SC 29690

Travelers Rest, SC: 800-476-4103 • Simi Valley, CA: 800-423-0150 • Fax: 864-834-3518 • www.tsbrass.com

Model No. **B-3952-01**

Item No.

ITEM	SALE NO.	DESCRIPTION
1	010389-45	O-Ring, Plunger
2	010390-45	Ferrule, Coupling Nut
3	010391-45	Nut, Coupling for Twist Drain
4	010382-45	Gasket, 3 1/2" Face Flange
5	010384-45	Flange, 3 1/2" Face
6	010386-45	Strainer, 3 1/2" Snap-in Removable
7	010388-45	Plunger, Lever and Twist Drain
8	010393-45	Handle, Rotary Waste Valve Twist
9	011355-45	Tube, Overflow Elbow
10	011356-45	Head, Overflow Tube



Washers, O-Rings & Gaskets are included in Parts Kit B-39K

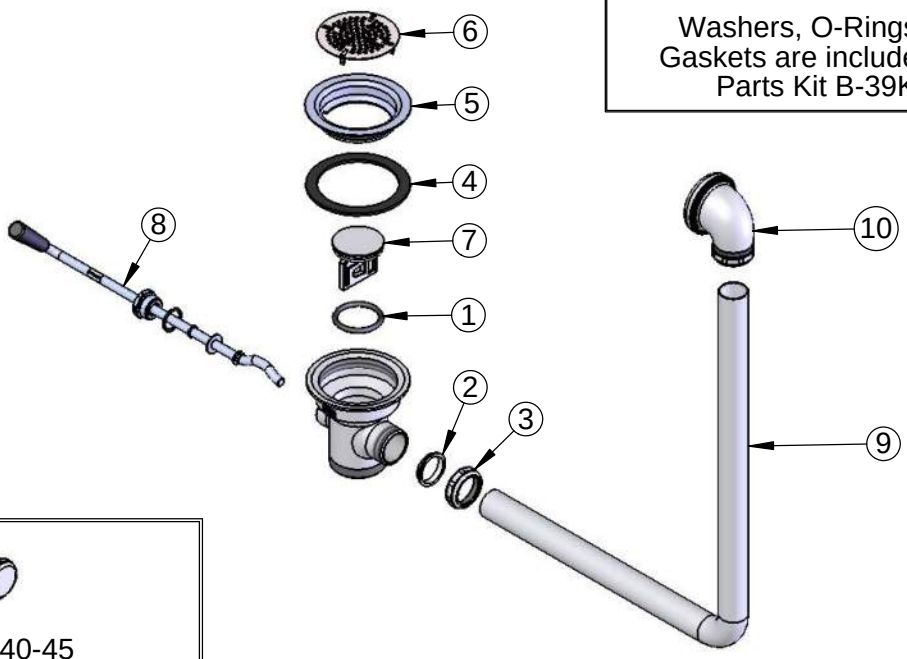



012640-45
Waste Drain Overflow Cap w/ Sealing Washer (Included)

Product Specifications:
Rotary Waste Drain Valve w/ Twist Handle, 3 1/2" Sink Opening, 2" Male NPT / 1-1/2" Female NPT Outlet & Overflow Tube & Head

Product Compliance:
ASME A112.18.2 / CSA B125.2

Drawn:	KJG	Checked:	JRM	Approved:	JHB	Date:	08/28/14	Scale:	NTS	Sheet: 2 of 2

T&S BRASS AND BRONZE WORKS, INC.
2 Saddleback Cove / P.O. Box 1088
Travelers Rest, SC 29690

Travelers Rest, SC: 800-476-4103 • Simi Valley, CA: 800-423-0150 • Fax: 864-834-3518 • www.tsbrass.com

Model No.
B-0290-04
Item No.

ADA Compliant

This Space for Architect/Engineer Approval

Job Name_____Date_____

Model Specified_____ Quantity_____

Customer/Wholesaler_____

Contractor_____

Architect/Engineer_____

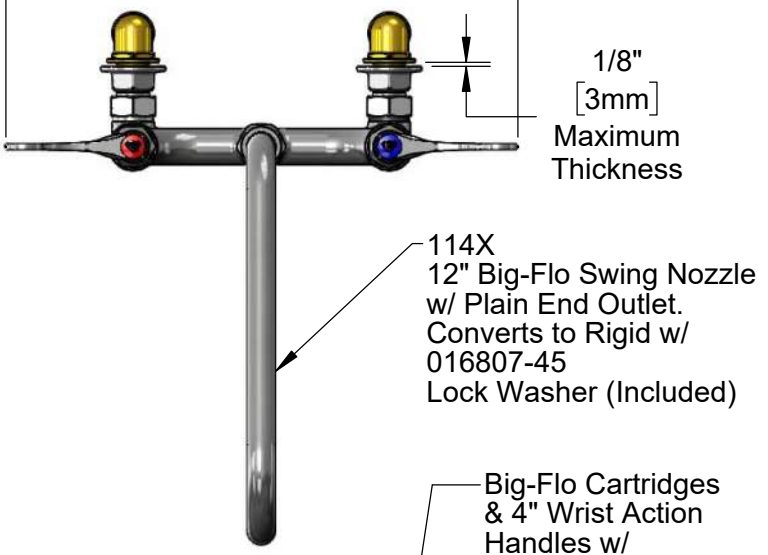



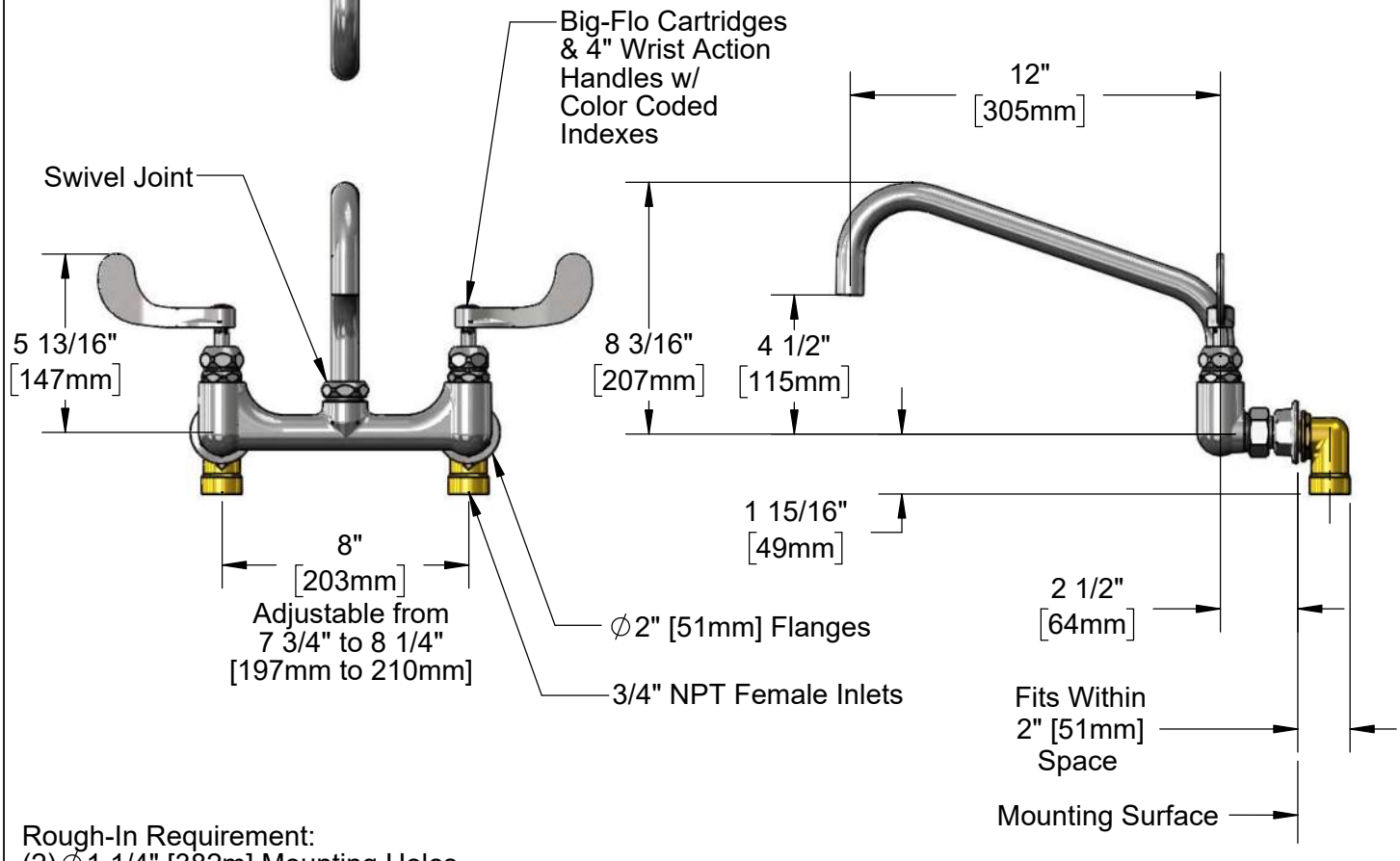

Rough-In Requirement:
(2) ∅1 1/4" [382m] Mounting Holes

Product Specifications:
8" Wall Mount Big-Flo Mixing Faucet, Big-Flo Cartridges, 4" Wrist Action Handles,12" Big-Flo Swing Nozzle & 3/4" NPT Female Inlets

Product Compliance:
ASME A112.18.1 / CSA B125.1
NSF 61 - Section 9
NSF 372 (Low Lead Content)
ANSI A117.1 (ADA)

Drawn: MRC	Checked: JRM	Approved: JHB	Date: 06/15/18	Scale: 1:6	Sheet: 1 of 2

T&S BRASS AND BRONZE WORKS, INC.
2 Saddleback Cove / P.O. Box 1088
Travelers Rest, SC 29690

Travelers Rest, SC: 800-476-4103 • Simi Valley, CA: 800-423-0150 • Fax: 864-834-3518 • www.tsbrass.com

Model No.
B-0290-04

Item No.

ITEM NO.	SALES NO.	DESCRIPTION
1	114X	12" Big-Flo Swing Nozzle
2	000847-20	Big-Flo Swivel Piece
3	001068-45	O-ring
4	016807-45	Serrated Lock Washer
5	001193-19NS	Red Button Index, Press-in
6	018506-19NS	Blue Button Index, Press-in
7	000925-45	Lab Handle Screw
8	006481-40NS	Big-Flo Cartridge, LTC
9	001019-45	Coupling Nut Washer
10	00BB	3/4" NPT Female Eccentric Flange
11	001005-45	Washer
12	000971-45	Lock Nut, 3/4-14 NPSM
13	00LL	3/4" Short Elbow Inlet
14	000764-20	Seat, Big-Flo
15	006482-40NS	Big-Flo Cartridge, RTC
16	B-WH4-NS	Wrist Action Handle (New Style)

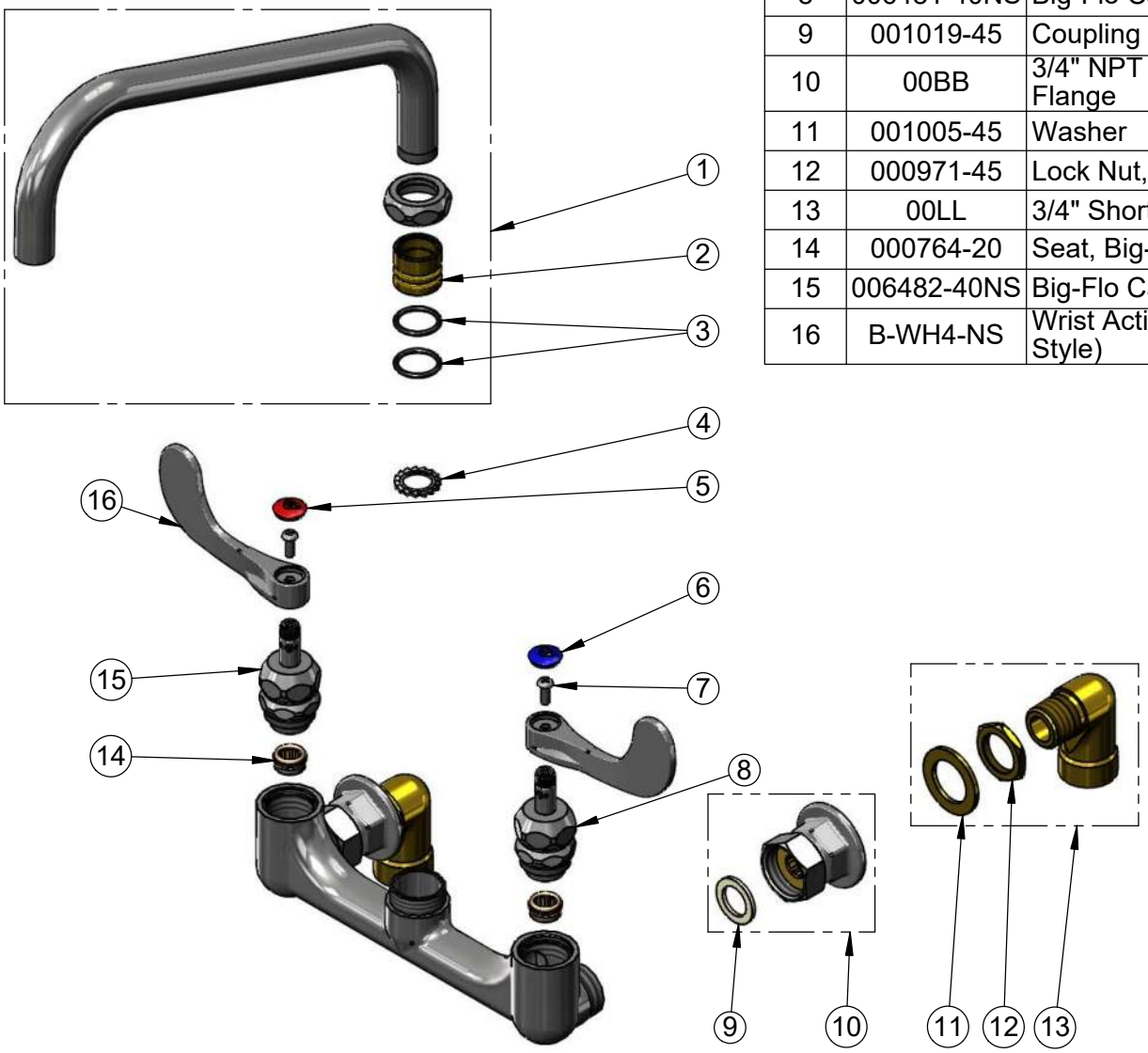

Product Specifications:
8" Wall Mount Big-Flo Mixing Faucet, Big-Flo Cartridges, 4" Wrist Action Handles,12" Big-Flo Swing Nozzle & 3/4" NPT Female Inlets

Product Compliance:
ASME A112.18.1 / CSA B125.1
NSF 61 - Section 9
NSF 372 (Low Lead Content)
ANSI A117.1 (ADA)

Drawn:	MRC	Checked:	JRM	Approved:	JHB	Date:	06/15/18	Scale:	NTS	Sheet:	2 of 2

Champion®
The Dishwashing Machine Specialists

Project _____
Item No. _____
Quantity _____

UL-130 UNDERCOUNTER

UL-130

Low Temperature
Undercounter
Dishwashing Machine

STANDARD FEATURES

- **Wash Refresh**™ – Automatically drains the water for the next cycle, ensuring heavily soiled items are always sanitized with new wash water
- Pumped drain
- **StemSure**™ – Soft start to protect glasses and dishes from chipping and breaking
- Door safety switch
- Low-water tank heat protection
- Built-in detergent, rinse-aid, and sanitizer dispensing pumps
- Wash pump, 1-Hp motor
- Electric tank heater
- Upper & lower interchangeable wash/rinse spray arms
- Top mounted controls
- Stainless steel top and side panels
- Single phase connection
- Stainless steel construction
- 115V power cord
- One year parts and labor warranty



Photo is for general visual representation only. Please refer to specifications for the latest detailed product information.

OPTIONS & ACCESSORIES

- ☐ **Additional Dish Racks**
  - ☐ **Peg**
  - ☐ **Flat**
- ☐ **17" Stand** Stainless Steel
- ☐ **4.5" Stand** (converts to a standard counter height)
- ☐ **8" Leg Stand**
- ☐ **1" Roller Kits available** (includes 4 casters)
- ☐ ***NEW*** **Champion ION scale prevention system**
- ☐ **Chemical alarm kit** (mounted)

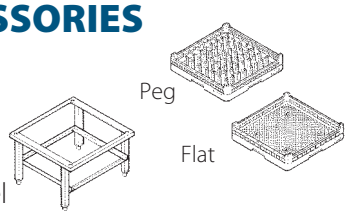

SPECIFIER STATEMENT

Specified unit will be Champion model UL-130 undercounter low temperature dishwashing machine with built-in detergent, rinse-aid, and sanitizer dispensing pumps.

Features 141 second total cycle, 1 Hp pump motor, fill and dump, pumped drain. Constructed of stainless steel.

1 year parts and labor warranty.

Note: Vent hood is not recommended, as unit does not produce excessive steam.

Note: Always follow local building code guidelines.

Champion Industries, Inc.
3765 Champion Blvd, NC 27105
Tel: 336/661-1556 Fax: 336/661-1979
www.championindustries.com

CH085
(1M) 4/21 Printed in U.S.A.

UL-130 UNDERCOUNTER

UL-130

Low Temperature
Undercounter
Dishwashing Machine

Champion®
The Dishwashing Machine Specialists

Dimensions shown in inches and [milimeters]

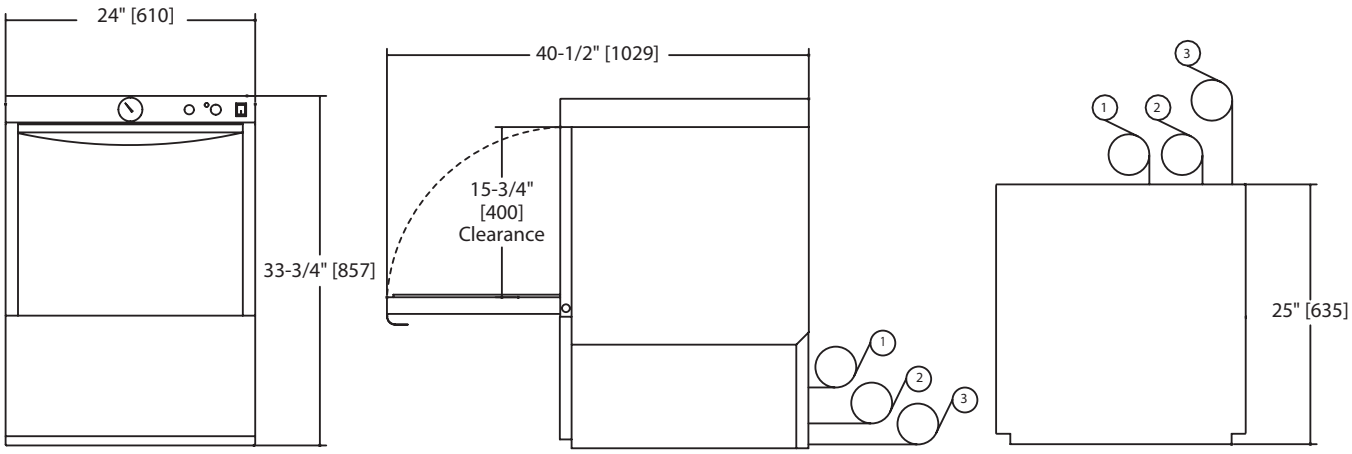

Front View **Side View** **Plan View**

Utilities

1	**Electrical** 115/60/1; 12-amp draw; to be fused at 15 amp. 4 ft. plug-in cord supplied.
2	**Water connection** 120°F minimum hot water connection (140°F recommended) 6 ft. long, 1/2" I.D. flexible fill hose with 3/4" hose connector. Flow pressure: 25-95 psi.
3	**Pumped Drain** 5/8" I.D. flexible reinforced hose, 6 ft. long. Max. drain flow 15 US gpm. Max. drain height 3 ft.

Complies with ANSI/ASSE 1440 Sections 1.4.3 & 1.4.4

	Uncrated	Crated
Height*	33-3/4"	39-1/2"
Width	24"	25"
Depth	25"	25-1/2"
Ship Wt. lbs/kg	153	173

* Front leveling feet provided.

Warning Plumbing and electrical connections should be made by qualified personnel who will observe all the applicable plumbing, sanitary and safety codes and the National Electrical Code.

SPECIFICATIONS

Capacity
Racks per hr. 25

Motor horsepower
Wash 1

Water consumption
U.S. Gal. per hr. (Max. use) 32
U.S. Gal. per rack 1.5

Temperatures °F
Wash 120°F Min (140°F recommended)
Rinse 120°F Min (140°F recommended)

Heating
Tank heat, electric (kW) .75

Time cycle in seconds
Wash 90
Rinse 26
Drain/fill 25
Total cycle 141

Standard 20" x 20" rack complement
Dish 1
Open 1

Due to an ongoing value analysis program at Champion, specifications contained in this catalog are subject to change without notice.

Champion Industries, Inc.,
3765 Champion Blvd., NC 27105
336/661-1556 • Fax: 336/661-1979
ChampionIndustries.com

an Ali Group Company
The Spirit of Excellence

PROJECT: _____ **ITEM NO.:** _____

SS SERIES FOOD WASTE DISPOSERS

Food waste disposers are a hygienic and environmentally sustainable way to manage pre- and post-consumer scraps in a foodservice establishment. The SS Series disposers are ideal for heavy-duty applications such as restaurants, schools and universities, healthcare facilities and hospitals, and government facilities.

1 YEAR ON-SITE PARTS & LABOR WARRANTY

PRODUCT FEATURES & SPECIFICATIONS

SS-SERIES

- Whether you serve 25 or 2,500 people, there is an InSinkErator disposer that's designed for your operation. From the small-capacity SS-100™ model to our large-capacity SS-1000™ workhorse, InSinkErator disposers deliver superior performance, quiet operation, maximum energy efficiency, and reliable service.

SYSTEM OVERVIEW

- Stainless steel and chrome-plated finish
- Corrosion-resistant, stainless steel grind chamber
- Heavy-duty induction motor with built-in thermal overload protection
- Enclosure provides protection against outside moisture with controlled power air flow to cool motor
- Cast-nickel, chrome-alloy stationary and rotating shredding elements
- Double-tapered Timken roller bearings provide a shock-absorbing cushion
- Triple lip seal protects motor from water damage
- Secondary spring-loaded oil seal provides double protection against water and loss of grease

CLEANING

- Disposers are easy to clean and maintain
- Wipe down exterior surfaces with a wet cloth
- Use warm soapy water on the splashguard



Commercial Disposer Sizing Chart

To determine the proper size disposer, use this recommended sizing chart. Sizing recommendations are given in general terms; actual capacities vary depending on the volume and type of food waste.

Volume Processed / Application	Light Majority Fruits & Vegetables	Medium 50/50 Mixture	Heavy Majority Meats & Seafood
High Buffet/Cafeteria Government	SS-300	SS-300/ SS-500	SS-500	SS-500/ SS-1000	SS-500/ SS-1000
Medium Full Service Restaurant	SS-200	SS-300	SS-300/ SS-500	SS-500	SS-500/ SS-1000
	SS-100	SS-200	SS-300	SS-300/ SS-500	SS-1000
Low Limited Service Restaurant/Café/ Fast Casual	SS-100	SS-100	SS-200	SS-300	SS-300/ SS-500

Food Waste Composition

A complete collection of our product drawings is available for download at the **InSinkErator Revit/CAD** Library, which can be found at www.insinkerator.com/foodservice. Product information is also accessible on ***The KCL CADalog***. More information is available from KCL at www.kclcad.com.

4700 21st STREET
RACINE, WI 53406
TEL: 800-845-8345
FAX: 262 554-3620
www.insinkerator.com/foodservice

c UL us LISTED NOM ANCE ISO 9001 QUALITY SYSTEMS CERTIFIED

The Emerson logo is a trademark and a service mark of Emerson Electric Co.

EMERSON

WHAT'S INCLUDED

- Base disposer: 1 mounting gasket
- Disposer packages: 1 mounting/bowl assembly, 1 electrical control, 1 syphon breaker, 1 solenoid valve, and 1 flow control valve (the standard flow control valve will be sent with the unit unless the optional valve is specified)

MODEL & HORSEPOWER/ELECTRICAL REQUIREMENTS (CHOOSE ONE)

Small Capacity Disposers



☐ **SS-100**
1 HP

	☐ 115/208-230V, 60 Hz, 1 Ph, 11.6/5.1/5.7 amps, **cULus**	☐ 120/208-240V, 60 Hz, 1 Ph, 11.6/5.1/5.7 amps, **NOM**
	☐ 208-230/460V, 60 Hz, 3 Ph, 2.0/2.4/1.2 amps, **cULus**	☐ 100/200-230V, 50/60 Hz, 1 Ph, 10.4/5.2/5.4 amps
Water Usage:	☐ 5 GPM (18.9 LPM) standard water flow	☐ 3 GPM (11.4 LPM) reduced water flow (optional)

Medium Capacity Disposer



☐ **SS-200**
2 HP

	☐ 115/208-230V, 60 Hz, 1 Ph, 17.4/7.7/8.7 amps, **cULus** ☐ 208-230/460V, 60 Hz, 3 Ph, 3.6/4.4/2.2 amps, **cULus** ☐ 115/208-230V, 60 Hz, 1 Ph, 17.4/7.7/8.7 amps, **cULus**, **short body**	☐ 208-230/460V, 60 Hz, 3 Ph, 3.6/4.4/2.2 amps, **cULus**, **short body** ☐ 208-240/460V, 60 Hz, 3 Ph, 3 Ph, 3.6/4.4/2.2 amps, **NOM**
Water Usage:	☐ 7 GPM (26.5 LPM) standard water flow	☐ 5 GPM (18.9 LPM) reduced water flow (optional)

Large Capacity Disposers



☐ **SS-300**
3 HP

	☐ 208-230/460V, 60 Hz, 3 Ph, 6.0/7.4/3.7 amps, **CUL** ☐ 208-230/460V, 60 Hz, 3 Ph, 6.0/7.4/3.7 amps, **CUL**, **short body** ☐ 208-230/460V, 60 Hz, 3 Ph, 7.0/8.6/3.7 amps, **NOM**	☐ 415V, 50 Hz, 3 Ph, 4.9 amps ☐ 220V, 50 Hz, 3 Ph, 7.2 amps ☐ 380V, 50/60 Hz, 3 Ph, 4.1/3.0 amps
Water Usage:	☐ 8 GPM (30.3 LPM) standard water flow	☐ 7 GPM (26.5 LPM) reduced water flow (optional)

☐ **SS-500**
5 HP

	☐ 208-230/460V, 60 Hz, 3 Ph, 8.6/8.8/4.4 amps, **CUL** ☐ 208-230/460V, 60 Hz, 3 Ph, 8.6/8.8/4.4 amps, **CUL**, **short body** ☐ 230/460V, 50 Hz, 3 Ph, 9.0/4.5 amps	☐ 415V, 50 Hz, 3 Ph, 6.0 amps ☐ 380V, 50 Hz, 3 Ph, 8.9 amps
Water Usage:	☐ 8 GPM (30.3 LPM) standard water flow	☐ 7 GPM (26.5 LPM) reduced water flow (optional)

☐ **SS-1000**
10 HP

	☐ 208-230/460V, 60 Hz, 3 Ph, 11.0/13.0/6.5 amps, **CUL** ☐ 208-230/460V, 60 Hz, 3 Ph, 11.0/13.0/6.5 amps, **CUL**, **short body**
Water Usage:	☐ 10 GPM (37.9 LPM) standard water flow

DISPOSER MOUNTING ASSEMBLIES (CHOOSE ONE)

Sink Collar Mounts



☐ **#5 Sink Flange Kit**
for 3-1/2"–4" (88.9 mm–101.6 mm) sink opening (support legs are recommended)

#5 adaptors only available on small and medium capacity disposers.



☐ **#6 Collar Adaptor Kit**
for welding into trough, for 6-5/8" (168.3 mm) opening, includes splash baffle



☐ **#7 Collar Adaptor Kit**
for welding into sink, for 6-5/8" (168.3 mm) opening, includes splash baffle and stopper

Sink Bowl Mounts

Bowl Size	Kit Type
☐ 12" (304.8 mm) with one adjustable water nozzle ☐ 15" (381.0 mm) with one adjustable water nozzle ☐ 18" (457.2 mm) with two adjustable water nozzles	



☐ **Type A Sink Bowl Assembly**
- bowl
- water nozzle(s)
- bowl cover
- splash baffle



☐ **Type B Sink Bowl Assembly**
- bowl
- water nozzle(s)
- silver guard
- splash baffle



☐ **Type C Sink Bowl Assembly**
- bowl
- water nozzle(s)
- splash baffle

ELECTRICAL CONTROLS (CHOOSE ONE)

☐ **AS-101 Control Center** AquaSaver®	☐ **CC-101 Control Center**	☐ **CC-202 Control Center**	☐ **Manual Reverse Switch**	☐ **Manual Switch**
				
• Automatically changes direction • Stainless-steel housing • Automatic shut-off with power loss • Line disconnect • Programmable post-flush • Timed run • Automatically regulates water flow to grind load	• Automatically changes direction • Stainless-steel housing • Automatic shut-off with power loss • Line disconnect • Programmable post-flush • Timed run	• Automatically changes direction • Stainless-steel housing • Automatic shut-off with power loss	• Manually changes direction • Stainless-steel housing • Automatic shut-off with power loss	• Single direction • Polycarbonate housing • Automatic shut-off with power loss

DISPOSER DIMENSIONS

Standard models shown. A short body model is available on medium and large capacity disposers. Short body models reduce overall height by 1" (25.4 mm) on medium capacity disposers and by 3" (76.2 mm) on large capacity disposers.

Small Capacity

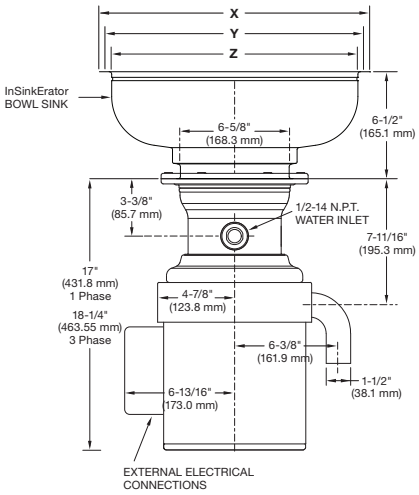

Medium Capacity

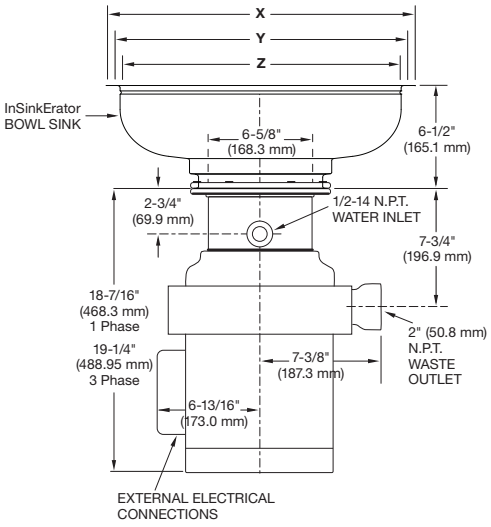

Large Capacity

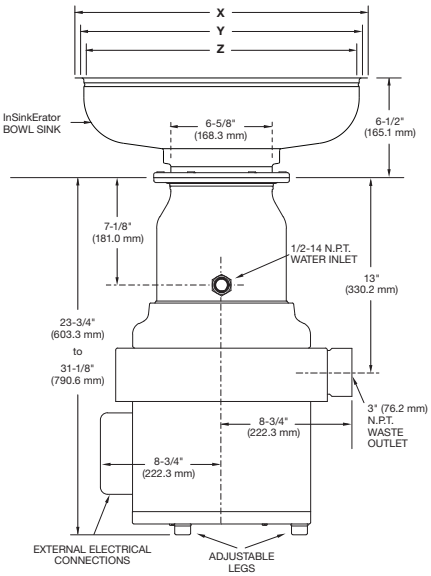

If mounting directly to a sink, use dimension chart below for adaptor height in place of InSinkErator bowl sink height.
IMPORTANT: #5 adaptors only available on small and medium capacity disposers.

Bowl Mounts	Flange O.D. **X**	Work Table Hole **Y**	Flange I.D. **Z**	**Height**
12" (304.8 mm)	13-1/2" (342.9 mm)	12-1/4" (311.2 mm)	12" (304.8 mm)	6-1/2" (165.1 mm)
15" (381 mm)	16-1/2" (419.1 mm)	15-1/4" (387.4 mm)	15" (381.0 mm)	6-1/2" (165.1 mm)
18" (457.2 mm)	19-1/2" (495.3 mm)	18-1/4" (463.6 mm)	18" (457.2 mm)	6-1/2" (165.1 mm)
Collar Mounts	**X**	**Y**	**Z**	**Height**
#5	Fits Standard Sink Opening: 3-1/2" – 4" (88.9 mm – 101.6 mm)			2-3/4" (69.9 mm)
#6	7-13/16" (198.4 mm)	6-7/8" (174.6 mm)	6-5/8" (168.3 mm)	1-3/16" (30.2 mm)
#7	9-1/8" (231.8 mm)	7-7/8" (200.0 mm)	7-5/8" (193.7 mm)	2-1/16" (52.4 mm)

TYPICAL INSTALLATION - BOWL

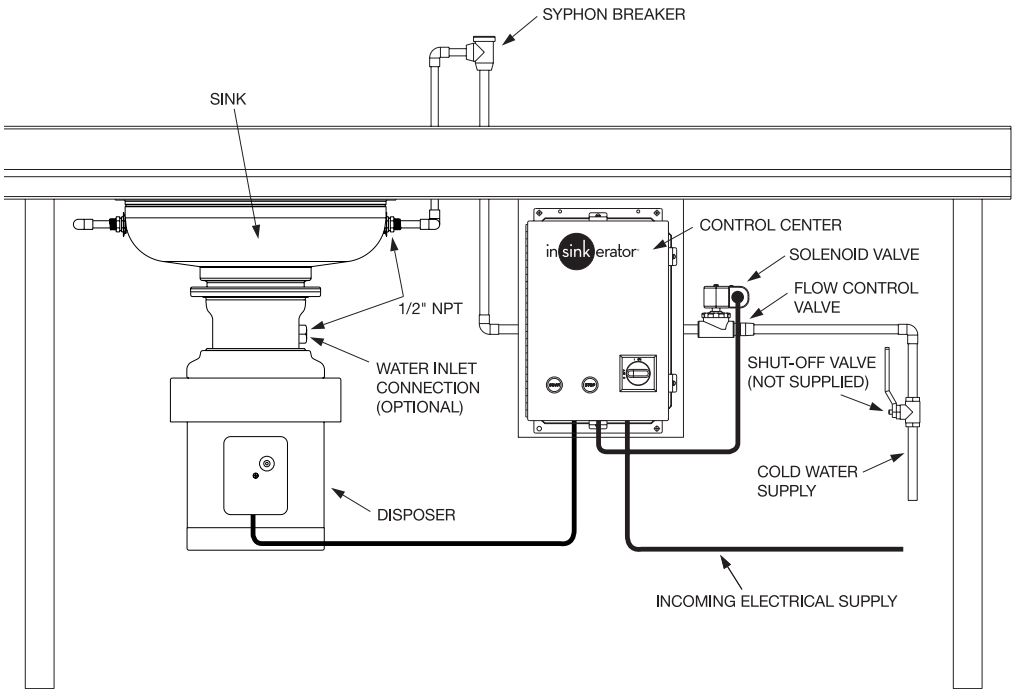

REPLACING A COMPETITIVE DISPOSER

- Refer to the Mounting Adaptor Guide or Video for adaptors that fit competitor sink bowls or cones.
- Have sink bowl/cone type with appropriate dimensions available when contacting Customer Service with questions or to place an order.

SAMPLE SPECIFICATION

InSinkErator Food Waste Disposer. Food waste grinding system with _____ HP disposer, _____ control panel. _____ Volts, _____ Hz, _____ Phase operation. _____ disposer mount. Syphon breaker with 1/2" NPT connections; flow control valve; (1) 24V water solenoid.

PROJECT INFORMATION

Item Number: _____

Quantity: _____

Manufacturer: InSinkErator

Model Number: _____

Electrical Requirements: _____volts _____phase

Project: _____

Address: _____

City/State/Zip: _____

Contact: _____

Phone: _____

Dealer: _____

City/State/Zip: _____

Contact: _____

Phone: _____

Installer: _____

Contact: _____

Phone: _____

Consultant: _____

Contact: _____

Phone: _____

PROJECT: _____ **ITEM NO.:** _____

DEJAMMING WRENCH

- Dejamming wrench loosens any lodged object
- Easy to handle
- To order, specify Part #13993

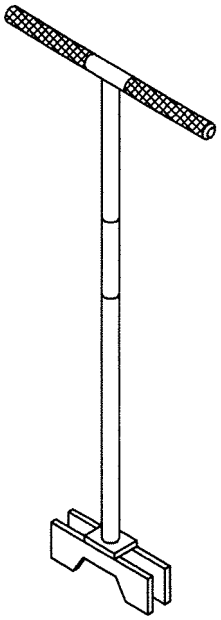

Dejamming Wrench

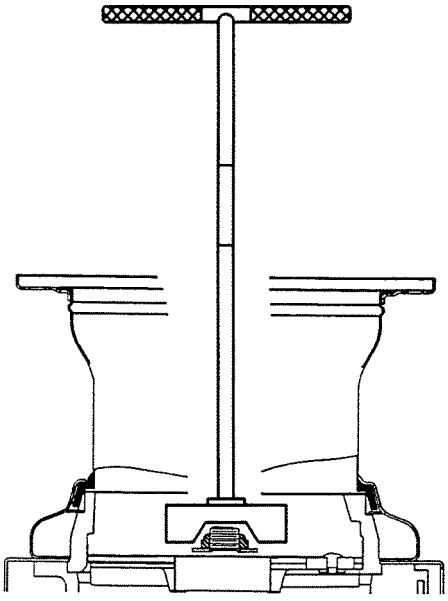

Dejamming Wrench engaged in unit

Place the wrench over the shredder nut and stationary lugs located on the rotating shredder. Using the handle, rotate the wrench clockwise then counterclockwise to loosen the jam.*

NOTE: After freeing the rotating shredder, remove all loose particles which may have caused the jam.

*Cannot be used with 3½" opening

Our products appear on ***The KCL CADalog*** CD-ROM based CAD Foodservice Symbol Library. More information is available from **Kochman Consultants, Ltd.** at www.kclcad.com.

4700 21st STREET
RACINE, WI 53406
TEL: 800-845-8345
FAX: 262-554-3620
www.insinkerator.com

The Emerson logo is a trademark and a service mark of Emerson Electric Co.

InSinkErator is a division of Emerson Electric Co. © InSinkErator Printed in USA Form No. F245-06E-19-02

T&S BRASS AND BRONZE WORKS, INC.
2 Saddleback Cove / P.O. Box 1088
Travelers Rest, SC 29690

Travelers Rest, SC: 800-476-4103 • Simi Valley, CA: 800-423-0150 • Fax: 864-834-3518 • www.tsbrass.com

Model No.
B-2339-7122C01J
Item No.

This Space for Architect/Engineer Approval

Job Name_____Date_____
Model Specified_____ Quantity_____
Customer/Wholesaler_____
Contractor_____
Architect/Engineer_____

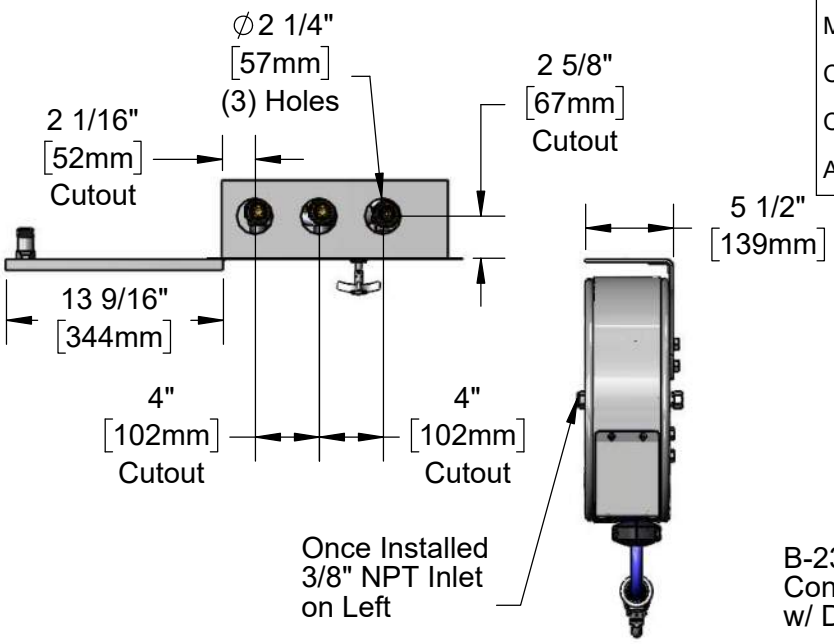

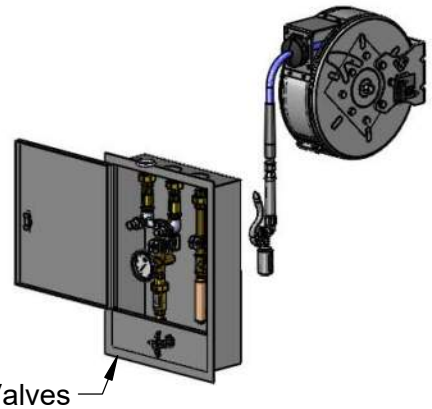
B-2339-LR
Control Cabinet
w/ Dual Check Valves

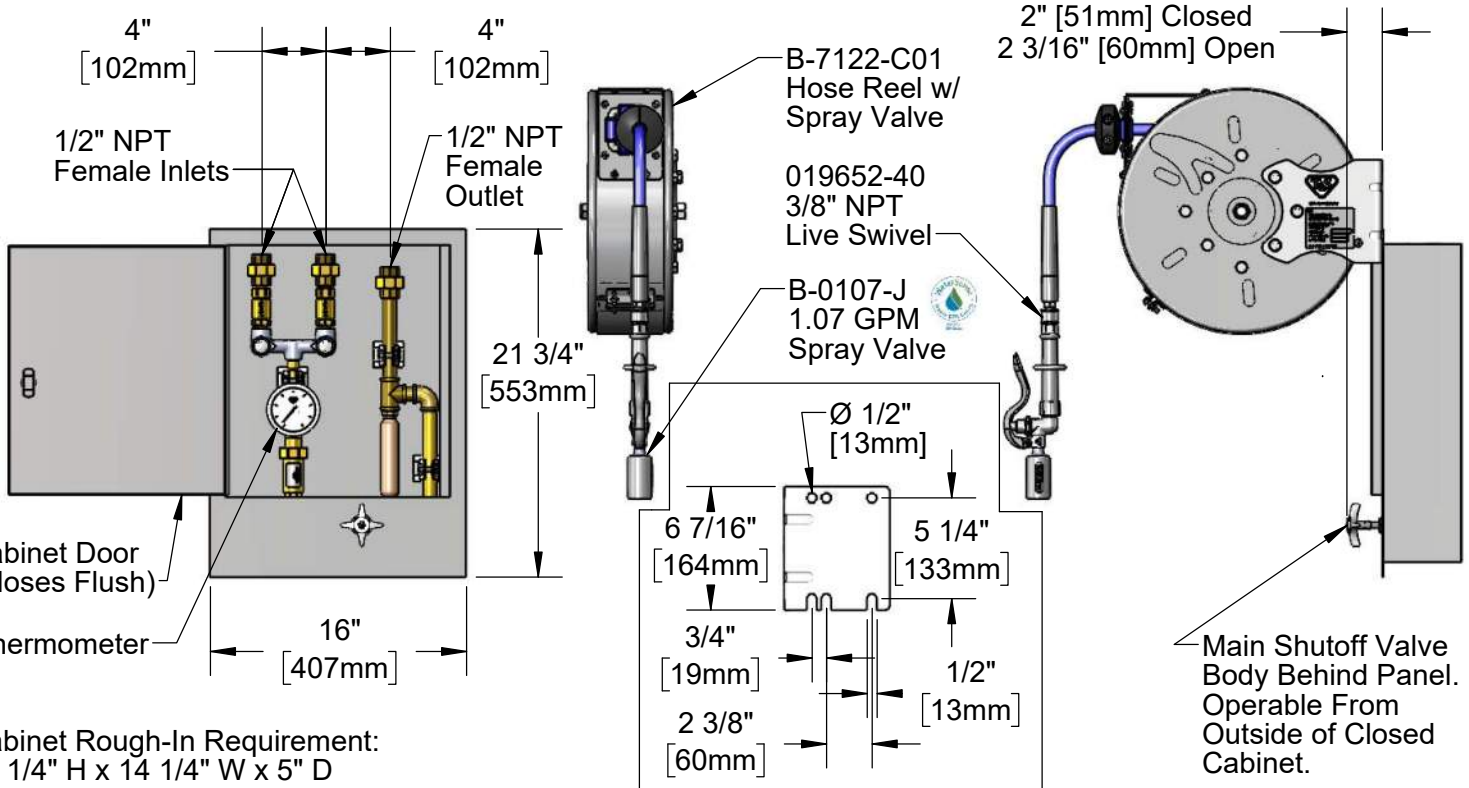

Cabinet Rough-In Requirement:
20 1/4" H x 14 1/4" W x 5" D

Product Specifications:
Enclosed Hose Reel w/ 30' of 3/8" Hose, 1.07 GPM Spray Valve w/ Swivel, Rinse Control Cabinet w/ Control Valve, Dual Check Valves, Thermometer & Water Hammer Arrestor

Product Compliance:
ASSE 1024 (VB)
NSF 61 Exempt (Non-Potable)
EPAct 2005 Compliant (PRSV)
EPA WaterSense (PRSV)

Drawn: KJG	Checked: MRC	Approved: JHB	Date: 08/17/18	Scale: 1:12	Sheet: 1 of 2

T&S BRASS AND BRONZE WORKS, INC.
2 Saddleback Cove / P.O. Box 1088
Travelers Rest, SC 29690

Travelers Rest, SC: 800-476-4103 • Simi Valley, CA: 800-423-0150 • Fax: 864-834-3518 • www.tsbrass.com

Model No.
B-2339-7122C01J

Item No.

ITEM NO.	SALES NO.	DESCRIPTION
1	B-2339-LR	Reel Control Cabinet w/ Control Valve, Dual Check Valves & Thermometer
2	019652-40	3/8" NPT Live Swivel
3	002881-40	Gray Grip Handle
4	000907-45	Spray Valve Hold Down Ring
5	010476-45	#27 Washer
6	B-0107-J	1.07 GPM Spray Valve

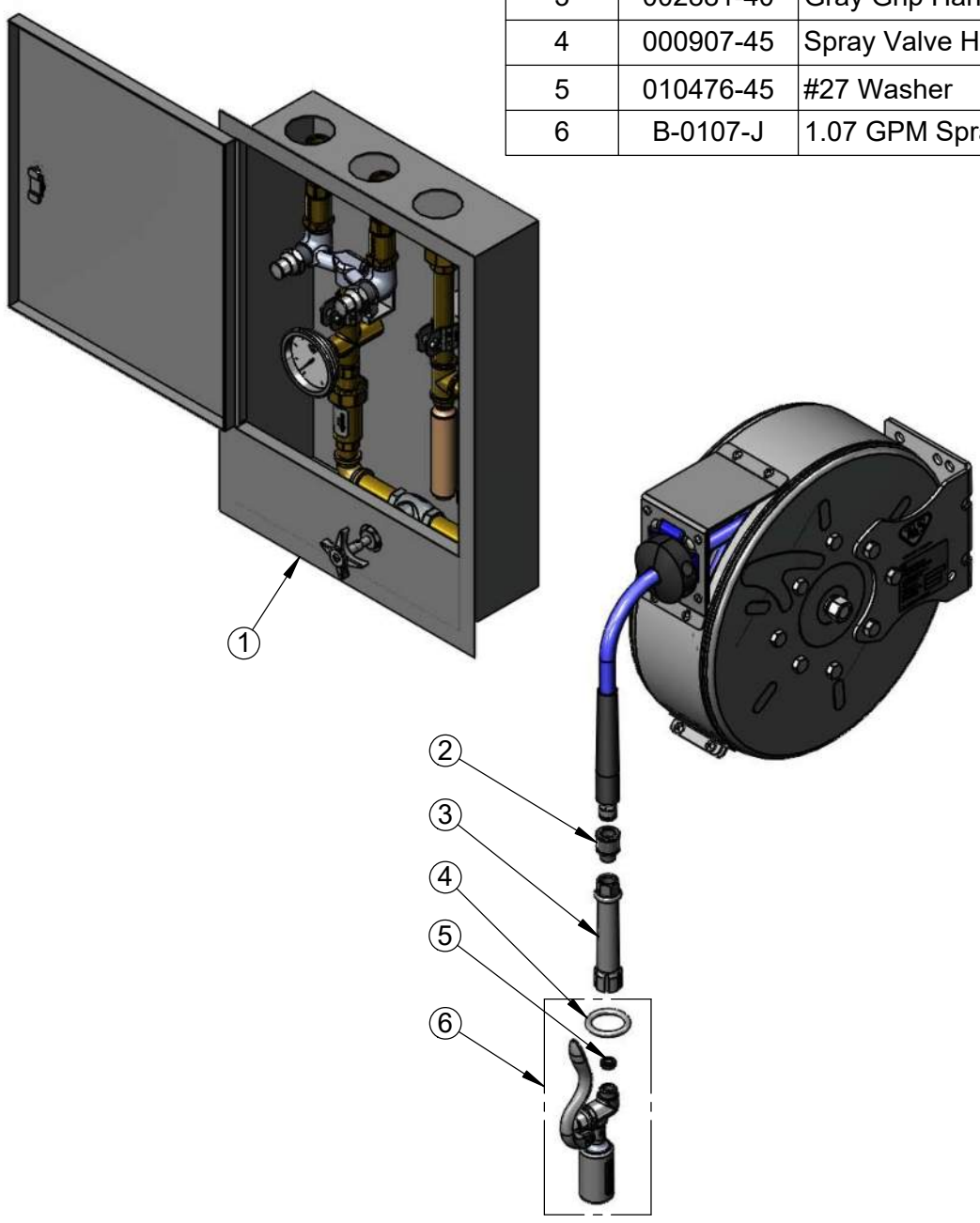

Product Specifications:
Enclosed Hose Reel w/ 30' of 3/8" Hose, 1.07 GPM Spray Valve w/ Swivel, Rinse Control Cabinet w/ Control Valve, Dual Check Valves, Thermometer & Water Hammer Arrestor

Product Compliance:
ASSE 1024 (VB)
NSF 61 Exempt (Non-Potable)
EPAct 2005 Compliant (PRSV)
EPA WaterSense (PRSV)

Drawn:	KJG	Checked:	MRC	Approved:	JHB	Date:	08/17/18	Scale:	NTS	Sheet: 2 of 2

T&S BRASS AND BRONZE WORKS, INC.
2 Saddleback Cove / P.O. Box 1088
Travelers Rest, SC 29690

Travelers Rest, SC: 800-476-4103 • Simi Valley, CA: 800-423-0150 • Fax: 864-834-3518 • www.tsbrass.com

Model No.
B-0963

Item No.

This Space for Architect/Engineer Approval

Job Name_____Date_____

Model Specified_____ Quantity_____

Customer/Wholesaler_____

Contractor_____

Architect/Engineer_____

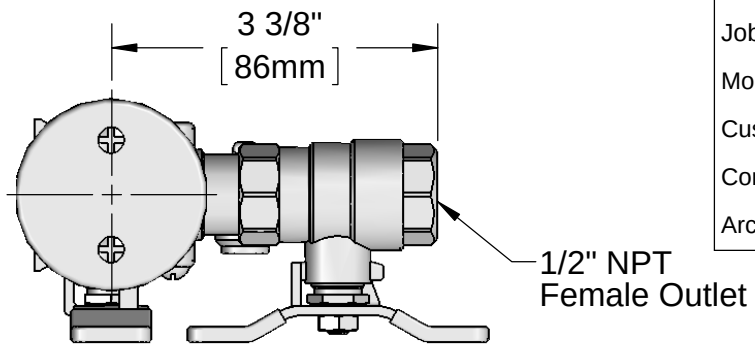

Repair Kit For This Model is Available as B-0963-RK

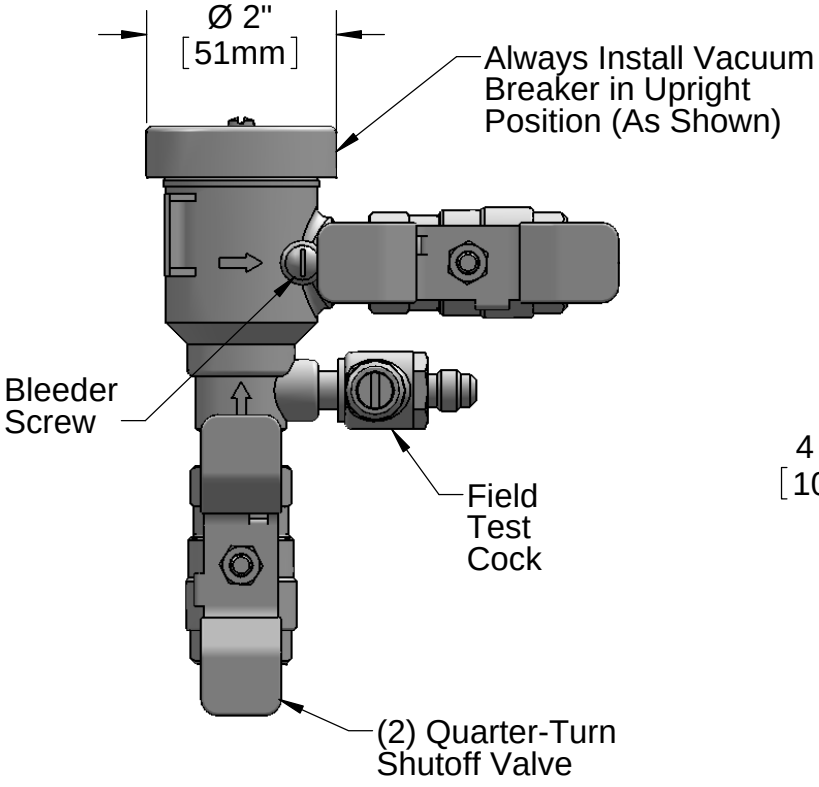

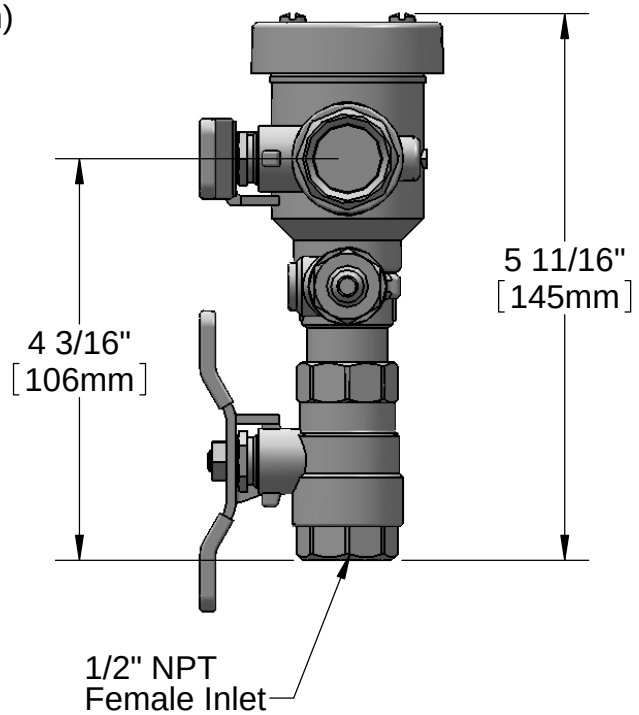

Product Specifications:
Continuous Pressure Vacuum Breaker, 1/4 Turn Ball Valves, Bleeder Screw,
Test Cock & 1/2" NPT Female Inlet & Outlet

Product Compliance:
ASME A112.18.1 / CSA B125.1
NSF 61 - Section 9
NSF 372 (Low Lead Content)
ASSE 1056 (VB)

Drawn:	Checked:	Approved:	Date:	Scale:	Sheet:
JBC	JRM	JHB	04/12/16	1:2	1 of 1

ADVANCE TABCO
SMART FABRICATION™

STAINLESS STEEL

HAND SINKS

with SOAP and PAPER TOWEL DISPENSER

Conforms To NSF 61/9 Lead Free Requirements

Item #: _____ **Qty #:** _____

Model #: _____

Project #: _____



7-PS-80



7-PS-79

Includes Side supports



7-PS-69

Includes Skirt



7-PS-85

TAPERED BOWL DESIGN

Click Here For Spec sheet!

Electronic Faucet



7-PS-41



Front Loading



7-PS-46

A.D.A. Compliant

FEATURES:

One piece **Deep Drawn** sink bowl design.

"Z" bracket wall mounting plate

Keyhole wall mount bracket.

Stainless steel 1-1/2" IPS basket drain.

C-fold style towel dispenser with hinged towel box.

Specific Unit Features:

7-PS-41:

A.D.A. Compliant

14" x 16" x 5" sink bowl.

K-175 Hands Free AC/DC operated gooseneck faucet.

Deck mount liquid soap dispenser.

Front loading paper towel dispenser.

Stainless Steel Skirt with Removable Access Panel and enclosed bottom for storage.

7-PS-46:

7-PS-41:

14" x 16" x 5" sink bowl.

K-206 6" Extended splash mount gooseneck faucet with wrist handles

Front loading paper towel dispenser.

Deck mount liquid soap dispenser.

Stainless Steel Skirt with Removable Access Panel and enclosed bottom for storage.

7-PS-69:

10" x 14" x 5" sink bowl.

Splash mount liquid Soap Dispenser.

K-69 Heavy Duty Splash Mount Faucet (with Wrist Handles)

Side Support Brackets.

Lever operated drain, built-in overflow with plastic overflow tube and spring clamps.

1 1/2" P-Trap.

7-PS-79:

10" x 14" x 5" sink bowl.

K-59 gooseneck faucet.

Splash mount liquid Soap Dispenser.

7-PS-80:

10" x 14" x 5" sink bowl.

K-59 gooseneck faucet.

Splash mount liquid Soap Dispenser

Includes lever operated drain, built-in overflow with plastic overflow tube and spring clamps.

1 1/2" P-Trap.

7-PS-85

10" x 14" x 5" sink bowl.

K-59 gooseneck faucet.

Splash mount liquid Soap Dispenser.

Chrome plated 1 1/2" P-Trap & apron.

CONSTRUCTION:

All TIG welded.

All sink bowls have a large liberal radii with a minimum dimension of 2" and are rectangular in design for increased capacity.

Welded areas blended to match adjacent surfaces and to a satin finish.

Die formed Countertop Edge with a No-Drip offset.

MATERIAL:

Heavy gauge type 304 series stainless steel.

Wall mounting bracket is Galvanized and of offset design.

All fittings are brass / chrome plated unless otherwise indicated.

MECHANICAL:

Faucet supply is 1/2" IPS male thread hot and cold.

⚠ **WARNING:** Equipment that includes a faucet may expose you to chemicals, including lead, that are known to the State of California to cause cancer or birth defects or other reproductive harm. For more Info., visit www.p65warnings.ca.gov.

ADVANCE TABCO
SMART FABRICATION™
www.advancetabco.com

Customer Service Available To Assist You 1-800-645-3166 8:30 am - 7:00 pm E.S.T.

For Orders & Customer Service:
Email: customer@advancetabco.com or Fax: 631-242-6900

For Smart Fabrication™ Quotes:
Email: smartfab@advancetabco.com or Fax: 631-586-2933

DIMENSIONS and SPECIFICATIONS

TOL Overall: ± .500" Interior: ± .250" **FITTINGS SUPPLIED AS SHOWN** **ALL DIMENSIONS ARE TYPICAL**

7-PS-69

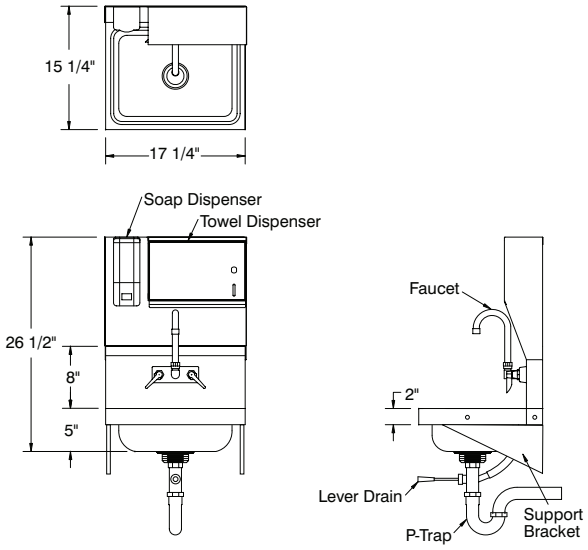

35 lbs.

7-PS-79

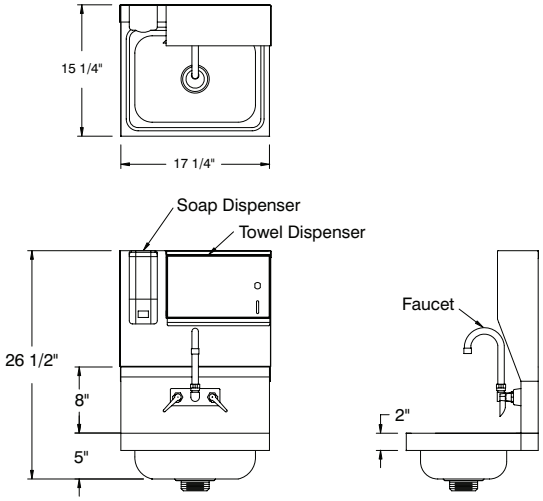

32 lbs.

7-PS-80

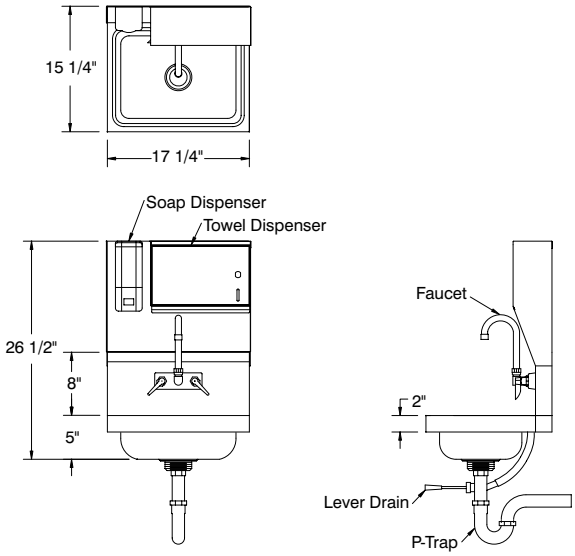

32 lbs.

7-PS-85

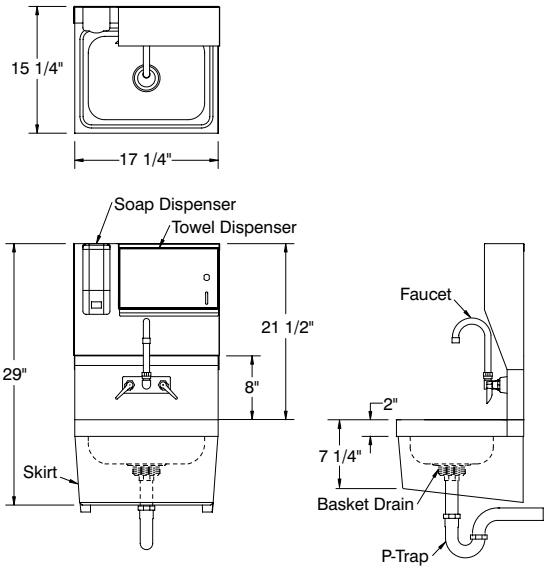

35 lbs.

ADVANCE TABCO is constantly engaged in a program of improving our products. Therefore, we reserve the right to change specifications without prior notice.

© ADVANCE TABCO, JANUARY 2020

16 GAUGE 300 SERIES STAINLESS STEEL

HAND SINK SIDE SPLASHES

WELDED & BOLT-ON

Item #: _____ **Qty #:** _____

Model #: _____

Project #: _____

FEATURES:

Shields surround work area from splashes and prevents cross-contamination.

Available as 7-3/4" and 12" high.

Welded Side Splashes

Available as 7-3/4", 12" & 24" high.

Factory installed only.

Bolt-on Single Panel Side Splash

Available as 7-3/4" and 12" high.

Includes holes only. Hardware not included.

CONSTRUCTION:

Welded Side Splashes (factory installed) are spot welded and polished to a satin finish.

Bolt-on Side Splashes (field installation) require drilling holes in hand sink to match holes in side splash. Mounting hardware is not included.



24" Side Splashes With Included Back Panel Shown
Factory Installed Only



Single Sided 7-3/4" Side Splash Shown
Factory Installed Only



Double Sided Bolt-On 7-3/4" Side Splashes Shown
Hardware Not Included

WELDED

	One Side Splash			Two Side Splashes				
	Model #	Approx. Weight	Approx. Cu. Ft.	Model #	Approx. Weight	Approx. Cu. Ft.	O.A. Splash Size W x H	Description
7-3/4" High Welded Side Splashes	**7-PS-16**	5 lbs.	1	**7-PS-17**	12 lbs.	1	15-1/4" x 9-3/4"	For 10" x 14" Bowls w/ Splash Mt. Faucets
	7-PS-16A	5 lbs.	1	**7-PS-17A**	12 lbs.	1	16-1/8" x 9-3/4"	For 9" x 9" Bowls
	7-PS-16B	5 lbs.	1	**7-PS-17B**	13 lbs.	1	17-1/8" x 9-3/4"	For 10" x 14" Bowls w/ Deck Mt. Faucets
	7-PS-16C	7 lbs.	1	**7-PS-17C**	15 lbs.	1	21-3/4" x 9-3/4"	For 16" x 20" Bowls
	7-PS-16D	8 lbs.	1	**7-PS-17D**	16 lbs.	1	23-3/8" x 9-3/4"	For Handicapped Hand Sinks
	7-PS-16E	6 lbs.	1	**7-PS-17E**	14 lbs.	1	19-5/8" x 9-3/4"	For 14" (F/B) x 16" Bowls
	7-PS-16F	6 lbs.	1	**7-PS-17F**	14 lbs.	1	21-1/8" x 9-3/4"	For 16" (F/B) x 14" Bowls
12" High Welded Side Splashes	**7-PS-11**	6 lbs.	1	**7-PS-15**	14 lbs.	1	15-1/4" x 14"	For 10" x 14" Bowls w/ Splash Mt. Faucets
	7-PS-11A	6 lbs.	1	**7-PS-15A**	14 lbs.	1	16-1/8" x 14"	For 9" x 9" Bowls
	7-PS-11B	6 lbs.	1	**7-PS-15B**	14 lbs.	1	17-1/8" x 14"	For 10" x 14" Bowls w/ Deck Mt. Faucets
	7-PS-11C	8 lbs.	1	**7-PS-15C**	18 lbs.	1	21-3/4" x 14"	For 16" x 20" Bowls
	7-PS-11D	9 lbs.	1	**7-PS-15D**	20 lbs.	1	23-3/8" x 14"	For Handicapped Hand Sinks
	7-PS-11E	7 lbs.	1	**7-PS-15E**	16 lbs.	1	19-5/8" x 14"	For 14" (F/B) x 16" Bowls
	7-PS-11F	8 lbs.	1	**7-PS-15F**	18 lbs.	1	21-1/8" x 14"	For 16" (F/B) x 14" Bowls
24" High Welded Side Splashes	**NOTE:** 24" High Side Splashes Include A Rear Panel That Matches The Height Of The Side Panels. (Only Available As Two Side Design, Single Side Not Offered)			**7-PS-28**	28 lbs.	1	15-1/4" x 26"	For 10" x 14" Bowls w/ Splash Mt. Faucets
				7-PS-28A	28 lbs.	1	16-1/8" x 26"	For 9" x 9" Bowls
				7-PS-28B	28 lbs.	1	17-1/8" x 26"	For 10" x 14" Bowls w/ Deck Mt. Faucets
				7-PS-28C	36 lbs.	1	21-3/4" x 26"	For 16" x 20" Bowls
				7-PS-28D	40 lbs.	1	23-3/8" x 26"	For Handicapped Hand Sinks
				7-PS-28E	32 lbs.	1	19-5/8" x 26"	For 14" (F/B) x 16" Bowls
				7-PS-28F	36 lbs.	1	21-1/8" x 26"	For 16" (F/B) x 14" Bowls

BOLT-ON Hardware Not Included

7-3/4" High				12" High				
Model #	O.A. Splash Size W x H	Approx. Weight	Approx. Cu. Ft.	Model #	O.A. Splash Size W x H	Approx. Weight	Approx. Cu. Ft.	Description
7-PS-27	15-1/4" x 10"	5 lbs.	1	**7-PS-13**	15-1/4" x 14"	6 lbs.	1	For 10" x 14" Bowls w/ Splash Mt. Faucets
7-PS-27A	16-1/8" x 10"	6 lbs.	1	**7-PS-13A**	16-1/8" x 14"	7 lbs.	1	For 9" x 9" Bowls
7-PS-27B	17-1/8" x 10"	6 lbs.	1	**7-PS-13B**	17-1/8" x 14"	7 lbs.	1	For 10" x 14" Bowls w/ Deck Mt. Faucets
7-PS-27C	21-3/4" x 10"	6 lbs.	1	**7-PS-13C**	21-3/4" x 14"	7 lbs.	1	For 16" x 20" Bowls
7-PS-27D	23-3/8" x 10"	7 lbs.	1	**7-PS-13D**	23-3/8" x 14"	8 lbs.	1	For Handicapped Hand Sinks
7-PS-27E	19-5/8" x 10"	7 lbs.	1	**7-PS-13E**	19-5/8" x 14"	8 lbs.	1	For 14" (F/B) x 16" Bowls
7-PS-27F	21-1/8" x 10"	7 lbs.	1	**7-PS-13F**	21-1/8" x 14"	8 lbs.	1	For 16" (F/B) x 14" Bowls

ADVANCE TABCO SMART FABRICATION™
www.advancetabco.com

Customer Service Available To Assist You 1-800-645-3166 8:30 am - 7:00 pm E.S.T.

For Orders & Customer Service:
Email: customer@advancetabco.com or Fax: 631-242-6900

For Smart Fabrication™ Quotes:
Email: smartfab@advancetabco.com or Fax: 631-586-2933

DIMENSIONS and SPECIFICATIONS

TOL ± .500" ALL DIMENSIONS ARE TYPICAL

BOLT-ON SIDE SPLASHES (Hardware Not Included)

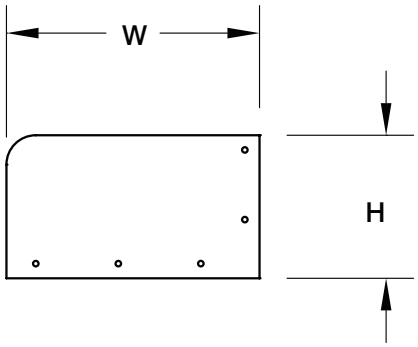

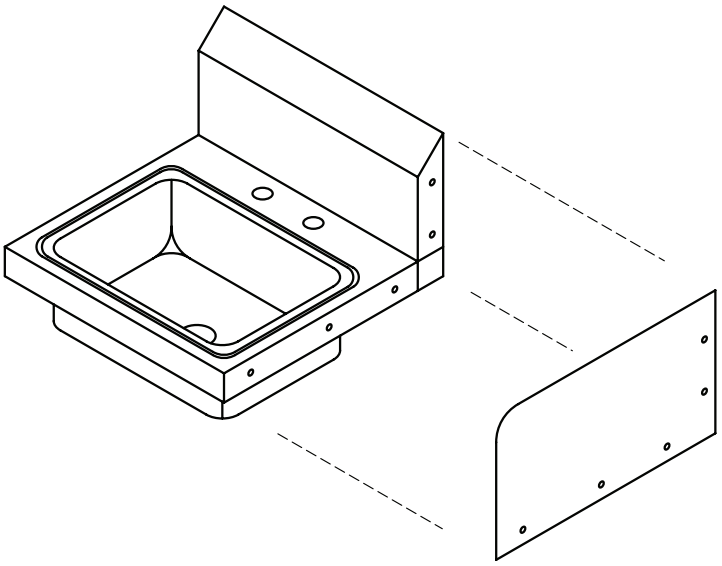

WELDED SIDE SPLASHES (Factory Installed Only)

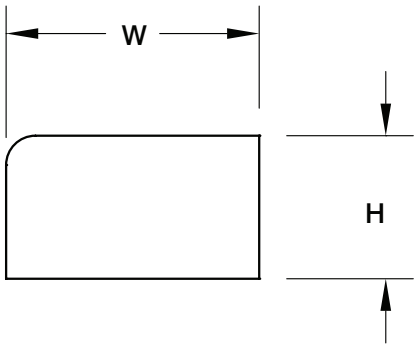

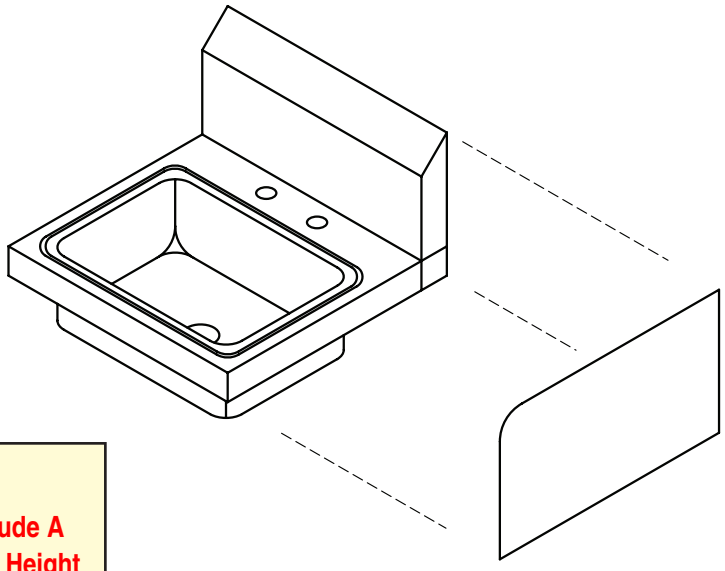

NOTE:

24" High Side Splashes Include A Rear Panel That Matches The Height Of The Side Panels And Is To Be Secured To The Rear Wall.

Rear Panel Mounting Holes Are Provided. (Hardware Not Included).

ADVANCE TABCO is constantly engaged in a program of improving our products. Therefore, we reserve the right to change specifications without prior notice.

© ADVANCE TABCO, APRIL 2020

Project	Quantity	Item #
Model Specified:		CSI Section 11400

Roll-In Refrigerator Models For 66" High Racks/Self-Contained



Model Shown Three Section

One, Two & Three Section Models, 32" Deep

R SERIES
Stainless Exterior & Interior

1-Section Solid Door Model	RRI132LUT-FHS*
2-Section Solid Door Model	RRI232LUT-FHS*
3-Section Solid Door Model	RRI332LUT-FHS

A SERIES
Stainless Exterior, Anodized Aluminum Interior

1-Section Solid Door Model	ARI132LUT-FHS*
2-Section Solid Door Model	ARI232LUT-FHS*
3-Section Solid Door Model	ARI332LUT-FHS

The "L-Height" roll-in refrigerator models are all designed to offer convenient interior storage for 66" high racks. Each is supplied standard with such high quality features as easy to operate microprocessor controls, balanced refrigeration systems and stainless steel exteriors. Additionally, they offer the widest range of optional accessories to choose from, and can be specified for use with many different applications, including: Foodservice, Correctional, Institutional, Export, etc.

Standard Product Features

- Traulsen's Smart Control With LED Display
- StayClear™ Condenser
- R-Series: Stainless Steel Exterior & Interior
- A-Series: Stainless Steel Exterior/Anodized Aluminum Interior
- Balanced, Self-Contained Refrigeration System Using R-450A
- Rear Biased Return Air Duct
- Full Length Stainless Steel Doors With Locks
- Self-Closing Doors With Stay Open Feature At 120°F
- Guaranteed For Life Cam-Lift Hinges
- Guaranteed For Life Horizontal Work Flow Door Handle(s)
- Standard Door Hinging: 132L = Right, 232L = Left/Right, 332L = Left/Right/Right (other hingings available)
- Automatically Activated LED Lights
- Stainless Steel Breaker Caps
- Accommodates Roll-In Racks Up To 66" High (provided by others)
- Automatic Non-Electric Condensate Evaporator
- Magnetic Snap-In EZ-Clean Door Gasket(s)
- Gasket-Protecting Metal Door Liner
- Thermostatic Expansion Valve Metering Device
- Stainless Steel One-Piece Louver Assembly
- Stainless Steel Interior Rack Guides & Threshold Ramp(s)
- 9' Cord & Plug Attached
- Three Year Parts And Labor Warranty
- Five Year Compressor Warranty

Options & Accessories

- Stainless Steel Finished Back With Rear Louvers
- Re-Hinging Feature For Door(s)
- Wire Shelf Package For Roll-In Models (includes three wire shelves per section)
- Additional Wire Shelves For Above
- Stainless Steel Shelf Package For Roll-In Models (includes three stainless steel shelves per section)
- Additional Stainless Steel Shelves For Above
- Locking Hasps (padlocks supplied by others)
- Export 220/50/1 Voltage
- Kool Klad Exterior Laminate Decor
- Clear Glass Door(s) In Place Of One Or More Solid Door(s)
- Remote Applications (see form TR35837 for more details)[2]
- Remote For Use With 20°F Glycol System
- Recessed Installation
- Prison/Correctional Facilities Options

ENERGY STAR

* ***Noted models are ENERGY STAR®*** listed. ***Please refer to www.energystar.gov to view the most up-to-date product listing and performance data.***

c UL us LISTED

NSF

Listed by Underwriters Laboratories Inc., to U.S. and Canadian safety standards and Listed by NSF International.

3-YEAR PARTS & LABOR WARRANTY

Approval: _____

TRAULSEN
4401 BLUE MOUND RD. FT. WORTH, TX 76106
PHONE 1 (800) 825-8220 FAX-MKTG. 1 (817) 624-4302
Website: www.traulsen.com

Project	Quantity	Item #
Model Specified:		CSI Section 11400

Specifications

Construction, Hardware and Insulation

Cabinet exterior front, one piece sides, louver assembly and doors are constructed of 20 gauge stainless steel with #4 finish. Cabinet interior and door liners are constructed of stainless steel (anodized aluminum in the A-Series). The exterior cabinet top, back and bottom are constructed of heavy gauge galvanized steel. The interior floor is constructed of stainless steel and insulated with ¾" of resilient cork. A readily attachable stainless steel ramp is provided to facilitate loading/unloading.

Doors are equipped with a heavy-duty, extruded wiper gasket for sealing to bottom ramp, removable plug cylinder locks and guaranteed for life cam-lift, gravity action, self-closing metal, glide hinges with stay open feature at 120°F. Hinges include a concealed switch to automatically activate the interior LED lighting. Guaranteed for life, work flow door handles are mounted horizontally over recess in door which limits protrusion from door face into aisleways. Doors have seamless, polished metal corners.

Gasket profile and Santoprene® material simplify cleaning and increase overall gasket life.Both the cabinet and door(s) are insulated with an average of 2" thick high density, non-CFC, foamed in place polyurethane.

DIMENSIONAL DATA	R/ARI132LUT	R/ARI232LUT	R/ARI332LUT
Net capacity cu. ft.	36.0 (1020 cu l)	74.3 (2105 cu l)	117.5 (3329 cu l)
Length - overall in.	35½ (90.2 cm)	68 (172.7 cm)	100½ (255.3 cm)
Depth - overall in.	35⁹⁄₁₆ (90.3 cm)	35⁹⁄₁₆ (90.3 cm)	35⁹⁄₁₆ (90.3 cm)
Depth - over body in.	32 (81.3 cm)	32 (81.3 cm)	32 (81.3 cm)
Depth - door open 90° in.	63¼ (160.7 cm)	63¼ (160.7 cm)	63¼ (160.7 cm)
Clear door width in.	27⅛ (68.8 cm)	27⅛ (68.8 cm)	27⅛ (68.8 cm)
Clear door height in.	66⁵⁄₁₆ (168.4 cm)	66⁵⁄₁₆ (168.4 cm)	66⁵⁄₁₆ (168.4 cm)
Height - overall in.[3]	83¼ (211.5 cm)	83¼ (211.5 cm)	83¼ (211.5 cm)
RRI Net Wt. lbs.	435 (197 kg)	700 (318 kg)	980 (445 kg)
ARI Net Wt. lbs.	365 (166 kg)	600 (272 kg)	840 (381 kg)
Rack Capacity - 66" High	1	2	3
ELECTRICAL DATA			
Voltage	115/60/1	115/60/1	115/60/1
Feed wires with Ground	3	3	3
Full load amperes	10.6	11.4	12.8
REFRIGERATION DATA			
Refrigerant	R-450A	R-450A	R-450A
Refrigerant Charge Amount	18 oz	27 oz	30 oz
BTU/HR H.P.[1]	2220 (⅓ HP)	4200 (½ HP)	5120 (¾ HP)

NOTES

NOTE: Figures in parentheses reflect metric equivalents.
1= Based on a 90°F ambient and 20°F evaporator.
2= For approximate remote weights deduct 40 lbs. from respective net or gross weight. For other information on remote models, please refer to form TR35837.
3= 12" Top clearance preferred for optimum performance and service access.

Refrigeration System

A top mounted, self-contained, balanced refrigeration system using environmentally friendly, non-flammable R-450A refrigerant is conveniently located behind the one piece louver assembly. It features a finless StayClear™ condenser, thermostatic expansion valve, air-cooled hermetic compressor, large, high humidity evaporator coil located outside the food zone and a top mounted non-electric condensate evaporator. Biased return air duct protects against introduction of warm kitchen air, promoting even temperature maintenance and efficient operation. A 9' cord and plug is provided. Standard operating temperature is 34 to 38°F.

Controller

Traulsen's Smart Control features advanced control algorithms and sophisticated diagnostic capabilities. Smart sensors will adapt the operation of the refrigeration system to a variety of environments and usage patterns. The Smart Control offers a complete set of visual alarms designed to alert the user to critical events. In the event of an alarm, a dedicated Alarm LED will illuminate, informing the user of the critical event and describing the event in the large, easy to read full text display.

Interior

Readily removable, interior-mounted, stainless steel guides for rack are provided for protection. Maximum rack size with wheels inboard of frame is 27" wide by 29" deep by 66" high. Racks supplied by others.

Warranties

Both a three year parts and labor warranty and a five year compressor warranty (self-contained models only) are provided standard.

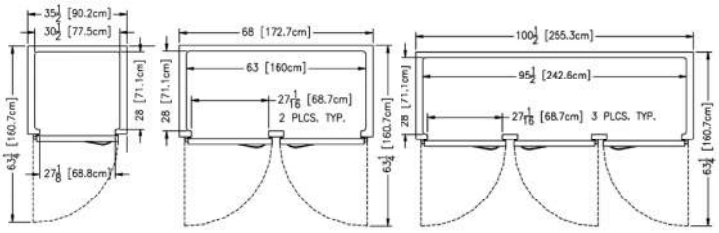

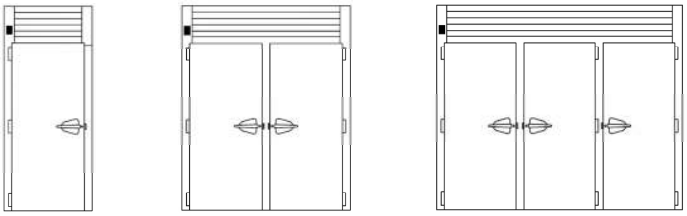



1 & 2 Section Models Equipped With One NEMA 5-15P Plug



3 Section Models Equipped With One NEMA 5-20P Plug

NOTE: Full load amps and plug style may vary depending on electrical options chosen and condensing unit employed.

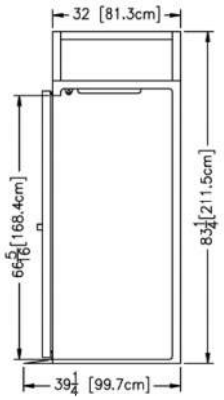

Section - All Models

NOTE: When ordering please specify: Voltage, Hinging, Door Size, Options and any additional warranties.

Continued product development may necessitate specification changes without notice.
Part No. TR35766 (REV. 01-21-19)

TRAULSEN
4401 BLUE MOUND RD. FT. WORTH, TX 76106
PHONE 1 (800) 825-8220 FAX-MKTG. 1 (817) 624-4302
Website: www.traulsen.com

FOOD WARMING EQUIPMENT

Specification Page: S10–13

PROJECT:	MODEL:	QUANTITY:	ITEM NO:

ALUMINUM RACKS

Transport 18" x 26" Trays, 12" x 20" Pans, and Oval Trays

"OTR SERIES"

ALUMINUM



OTR-FUA-05-11
Universal Rack



OTR-OT-06-10
Wide 6-3/8" tray ledge supports oval trays



OTR-UA-13
Universal Adjustable Rack

Economical and functional aluminum racks for transport, bussing and storage.

CHOICE OF THE PROFESSIONALS Since 1953 ™

These sturdy aluminum racks provide an economical solution for your transport and storage needs. Fabricated from high tensile extruded aluminum, the "OTR Rack Series" hold up to the demands in hotels, motels, restaurants, hospitals, bakeries . . . *and rugged enough for even correctional facilities.*

They're heavy-duty, yet light weight and easy to maneuver, even when fully loaded with roasting pans, steam table pans, sheet trays, or oval tray sheet pans.

The extruded aluminum runners are double welded for extra strength.

These racks are easy to clean and can be completely sanitized, washed, or steam cleaned while remaining rust resistant.

FWE...the "Choice of the Professionals."

- ◊ **Heavy-duty aluminum**
- ◊ **All welded construction - no rivets**
- ◊ **Welded tubular construction**
- ◊ **5" polyurethane casters**
- ◊ **Tray guides vary in style and type by model (details on other side)**
- ◊ **Two year limited warranty**

NSF

PROJECT:	MODEL:	QUANTITY:	ITEM NO:

SPECIFICATIONS:

ALUMINUM RACKS
For multi-purpose back-up

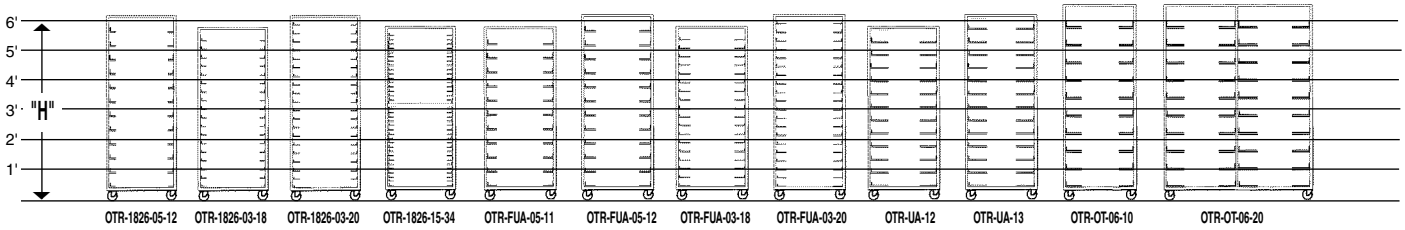

TRAY GUIDE DESCRIPTION



OTR-1826

1.5" (38)

18" x 26" TRAY GUIDE

OTR-FUA

3.125" (79)

UNIVERSAL TRAY GUIDE





OTR-UA

ADJUSTABLE TRAY GUIDE

3.125" (79)

OTR-OT

OVAL TRAY GUIDE

6.75" (171)



Consult Factory for SHIPPING CLASS

MODEL NUMBER	CAPACITIES: NUMBER OF TRAYS / PANS 18" x 26"	12" x 20"	OVAL	LOAD OPENING	SPACINGS (mm)	TRAY GUIDE LEDGE SIZE (mm)	OVERALL EXTERIOR DIMENSIONS IN. (mm): HIGH "H"	DEEP "D"	WIDE "W"	CASTER SIZE	SHIP WT. LBS. (KG)	CUBIC FEET (m3)
18" x 26" Racks - fixed spacings												
OTR-1826-05-12	12	---	---	18.375" (467)	5" (127)	1.875" (48)	69" (1753)	26" (660)	20.5" (521)	5" All Swivel	60 (28)	21.80 (.62)
OTR-1826-03-18	18	---	---	18.375" (467)	3" (76)	1.875" (48)	64" (1626)	26" (660)	20.5" (521)	5" All Swivel	80 (36)	20.54 (.58)
OTR-1826-03-20	20	---	---	18.375" (467)	3" (76)	1.875" (48)	69" (1753)	26" (660)	20.5" (521)	5" All Swivel	85 (40)	21.80 (.62)
OTR-1826-15-34	34	---	---	18.375" (467)	1.5" (38)	1.5" (38)	64" (1626)	26" (660)	20.5" (521)	5" All Swivel	90 (42)	21.33 (.60)
Universal Racks - fixed spacings												
OTR-FUA-05-11	11	11	---	18.375" (467)	5" (127)	3.125" (79)	64" (1626)	26" (660)	20.5" (521)	5" All Swivel	85 (40)	21.33 (.60)
OTR-FUA-05-12	12	12	---	18.375" (467)	5" (127)	3.125" (79)	69" (1753)	26" (660)	20.5" (521)	5" All Swivel	90 (42)	22.64 (.64)
OTR-FUA-03-18	18	18	---	18.375" (467)	3" (76)	3.125" (79)	64" (1626)	26" (660)	20.5" (521)	5" All Swivel	90 (42)	21.33 (.60)
OTR-FUA-03-20	20	20	---	18.375" (467)	3" (76)	3.125" (79)	69" (1753)	26" (660)	20.5" (521)	5" All Swivel	105 (48)	22.64 (.64)
Universal Racks - adjustable on 1.5" spacings												
OTR-UA-12	12	24	12	22.375" (568)	3.125" (79)	5" (127)	64" (1626)	26" (660)	24.5" (622)	5" 2 Swivel	118 (54)	28.31 (.80)
OTR-UA-13	13	26	13	22.375" (568)	3.125" (79)	5" (127)	70" (1778)	26" (660)	24.5" (622)	5" 2 Swivel	125 (57)	30.05 (.85)
Oval Tray Racks - wide angle fixed spacings												
OTR-OT-06-10	10	20	10	22.375" (568)	6" (152)	6.75" (171)	70" (1778)	30" (762)	26" (660)	5" 2 Swivel	70 (32)	28.13 (.80)
OTR-OT-06-20	20	40	20	22.375" (568)	6" (152)	6.75" (171)	70" (1778)	30" (762)	50.75" (1289)	5" 2 Swivel	160 (72)	55.13 (1.56)

CONSTRUCTION. Heavy-duty extruded type 6063 aluminum alloy. All uprights and runners are fully welded.

TRAY GUIDES. Tray guides are welded to the uprights. Spacings and ledge size vary in dimensions for intent of purpose and are indicated on chart above.

CASTERS. 5 inch heavy-duty, easy rolling, polyurethane tire casters with 1.5" wheel.

FWE Products are used by major companies world-wide. We can modify, design, or custom build equipment to fit your special requirements.

Food Warming Equipment Company, Inc.
P.O. Box 1001
Crystal Lake, IL 60039 USA
800-222-4393; 815-459-7500
Fax: 815-459-7989

Manufacturing Facilities:
7900 S. Route 31
Crystal Lake, IL 60014 USA
www.FWE.com sales@fweco.net

FWE products may be covered under one or more of the following U.S. patents: 288,299;238,300;3,952,609;4,192,991.

All specifications subject to change without notice.
© 09D Food Warming Equipment Company, Inc.

CRES COR®

JOB: _____

ITEM NO: _____

INSULATED HOT CABINET MODEL H-137-UA-12D

FEATURES AND BENEFITS:

- Fully insulated hot cabinet keeps prepared foods at serving temperatures.
- Powerful, yet efficient, 1500 Watt heating system maintains the right temperature to properly hold products. Heats up to 200˚F. (93˚C.).
- Standard solid state electronic control with large, clear, easy-to-read and operate LED digital display to ensure holding at precise food temperature
- Internal frame in body and doors maintains structural rigidity.
- Body constructed of non-corrosive, Hi-Tensile aluminum for strength and ease of mobility. One piece extended base protects cabinet body.
- Smooth interior coved corners prevent food particle/grease buildup.
- Self-closing insulated Dutch doors prevent temperature loss; magnetic door gaskets for proper seal. Field reversible for flexibility.
- Standard with right hand hinging; left hand hinging available upon request.
- Full length anti-microbial extruded door handles for “easy open”; positive catch secures door during transport.
- Recessed push/pull handles on both sides prevents damage to walls; allows easy maneuvering.
- Twelve sets of chrome plated wire universal angles accommodate a large variety of pan sizes on adjustable 1-1/2" centers.
- Heavy duty 5" swivel casters, two with brakes. Provides mobility when fully loaded.



H-137-UA-12D



Standard solid state electronic control with large, clear, easy-to-read and operate LED digital display to ensure holding at precise food temperature

ACCESSORIES and OPTIONS
(Available at extra cost):

- ❑ Tempered Glass Door Windows
- ❑ Extra Universal Angles
- ❑ Change from standard chrome plated wire angles to angles designed for transporting
- ❑ Magnetic Door Latch
- ❑ Corner Bumpers
- ❑ Perimeter Bumper
- ❑ Key Lock Handle
- ❑ Push Handle
- ❑ Bail Handles
- ❑ Floor Lock (for use with 5" casters)
- ❑ Various Caster Options
- ❑ Removable Cord Set
- ❑ 208 or 240 Volt Service
- ❑ Upgrade to 2000 Watt power unit
- ❑ HAACP Documentation (Built-in USB port)

See page B-20 for accessory details

GOLD

Gold indicates our Best Insulated Hot Cabinets with the best warranty in the industry.
3-Year Parts / 1-Year Labor.

Page B-5
Aug., 2012

CRES COR®
5925 Heisley Road • Mentor, OH 44060-1833
Phone: 877/CRESCOR • Fax: 440/350-7267
www.crescor.com

H-137-UA-12D

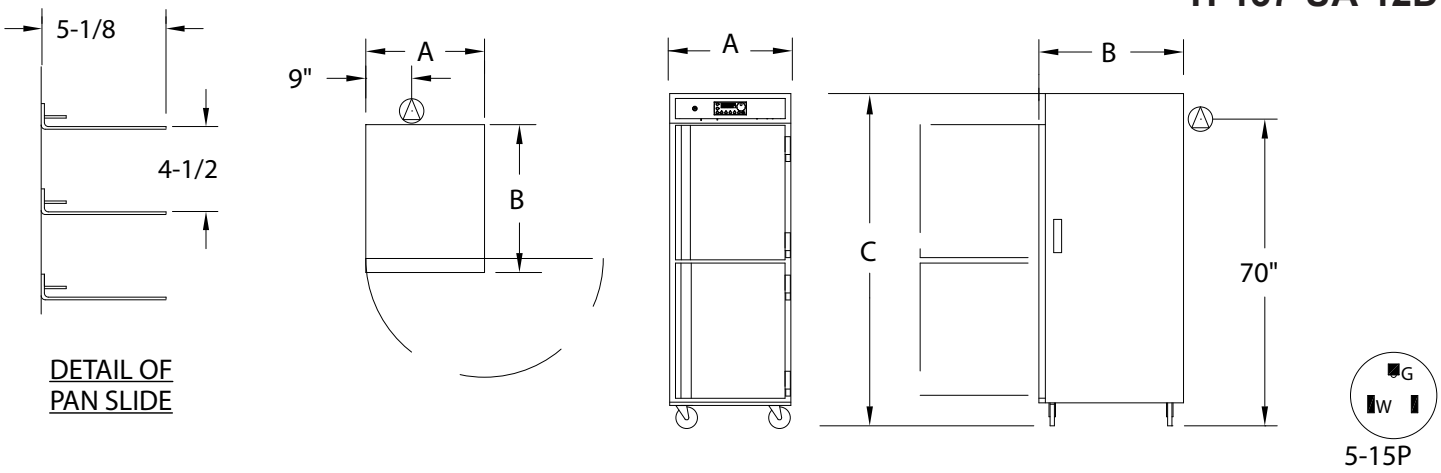

CRES COR MODEL NO.	PAN			DIM "A"	DIM "B"	DIM "C"	INSIDE DIMENSIONS				WEIGHT ACT.
	CAP/ANGLES	SIZE		WIDTH	DEPTH	HEIGHT	WIDTH	DEPTH	HEIGHT		
H-137-UA-12D	12 SETS	SEE NOTE BELOW	IN	28-3/4	32-3/4	73	22	26-7/8	58	LBS	255
			MM	730	835	1855	560	685	1475	KG	116

NOTES: 1. Pan sizes 22" x 20" (560 x 510) Roast & Bake Pans, 10" x 20" (255 x 510) Roast & Bake Pans, 18" x 26" (460 x 660) Bun Pans, 14" x 18" (355 x 460) Service Trays, 12" x 20" (305 x 510) Steam Table Pans. Refer to Pan Size Chart at end of section.
2. When ordering bumpers, add 2" to overall dimensions.

GOLD

Gold indicates our Best Insulated Hot Cabinets with the best warranty in the industry.
3-Year Parts / 1-Year Labor.

CABINET:
- Body: .063 aluminum.
- Reinforcement: Internal framework of 18 ga. stainless steel.
- Insulation: Fiberglass, thermal conductivity (K factor) is .23 at 75˚F. 1-1/2" in doors, top, base; 2" in sidewalls.
- Air tunnels: .063 aluminum; lift-out type, mounted on sides.
- Push/pull handles (2): 5" vertical; recessed.
- Interior coved corners.

BASE:
- One piece construction, .125 aluminum.
- Casters: 5" dia., swivel, modulus tires, 1-1/4 wide, load cap. 250 lbs. each, temp. range -45˚/+180˚F. Delrin bearings. Front casters equipped with brakes.

DUTCH DOORS:
- Field reversible.
- Inner and outer: .063 aluminum.
- Latches: Positive transport type with lock hasp.
- Extruded handles.
- Hinges: Self closing, stays open past 90˚.
- Gaskets: Perimeter type, magnetic santoprene.
- Pan stop: Embossed.

PAN SLIDES:
- Wire angles (.306 dia.), nickel chrome plated steel, mounted on lift-off posts.
- Spaced on 4-1/2" centers; adjustable on 1-1/2" centers.

Scan QR code to view Spec Sheet, Operating Manual, Wiring Diagram or to call Customer Service.

If you need a QR reader visit your App Store on your Smartphone or Tablet.

HOT UNIT COMPONENTS:
- Thermostat: Solid state digital display control, room ambient to 200˚F (93˚C).
- Switch: ON-OFF push button type.
- Power cord: Permanent, 10 ft., 14/3 ga.
- Heater: 1470 Watts.
- Blower motor.
- Vent fan.
- Thermometer: Digital.

POWER REQUIREMENTS:
- 1500 Watts, 120 Volts, 60 Hz., single phase, 12 Amps., 15 Amp. service.

SHORT FORM SPECIFICATIONS

Cres Cor Insulated Hot Cabinet Model H-137-UA-12D. Solid state electronic controlled times and temperatures. Inner, outer and top liners of .063 aluminum; stainless steel internal frame. (12) sets wire universal angles for multiple pan sizes, adjustable spacing every 1-1/2". Field reversible Dutch doors, made from .063 aluminum. Fiberglass insulation in sides 2"; doors, top, base 1-1/2". Interior coved corners. 1500 Watt, 120 Volt power unit. One piece base, .125 aluminum. 5" swivel modulus casters, Delrin bearings. Load capacity 250 lbs. each. 3-Year Parts / 1-Year Labor warranty. Provide the following accessories: ____ ____ ____ . NSF, CSA-US, CSA-C listed.

CRES COR®
5925 Heisley Road • Mentor, OH 44060-1833
Phone: 877/CRESCOR • Fax: 440/350-7267
www.crescor.com

In line with its policy to continually improve its products, CRES COR reserves the right to change materials and specifications without notice.

© Crescent Metal Products, Inc. 2012 All rights reserved.

Litho in U.S.A.

CRES COR®

PROOF HOT CABINETS **D**

ACCESSORIES

PERIMETER BUMPER
#1405-000

Non-marking reinforced gray rubber strip mounts to base of cabinet for protection. Adds 2" to depth and width.



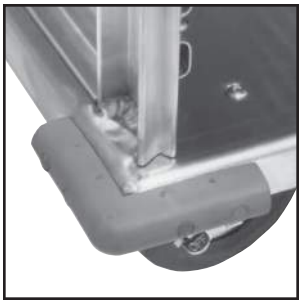

CORNER BUMPERS
#1056-002

Non-marking gray rubber strips mount to corners of cabinet base for protection. Adds 2" to depth and width.

PUSH HANDLE
#1087-000

Stainless steel rod with donut bumper on each end mounts 40" from floor to back or side of cabinet (specify location). Provides maneuverability.





BAIL HANDLE KIT
#1265-000

Two grip handles mounted to each side of cabinet 30" from floor for lifting and maneuvering. Drop to sides when not in use.



CASTER OPTIONS

Standard 5" dia. modulus casters can be substituted with polyurethane wheels or wheels of various diameters. Contact factory for casters available for your application.

CRES COR®
5925 Heisley Road • Mentor, OH 44060-1833
Phone: 877/CRESCOR • Fax: 440/350-7267
www.crescor.com

PAN SIZE CHART
for Universal Angle Models (-UA)

Cres Cor adjustable universal angles are designed to hold trays and pans shown below and in illustration on right.

Quantity of angles and adjustment increments are found on the product catalog page.

PAN TYPES AND SIZES

		Capacity per set of angles
1	Maxi Pan (20-3/4" x 25-1/2" x 1-1/8")	1
	European Standard Gastro-Norm Pan (20-3/4" x 25-1/2" x 3/4")	1
2	Steam Table Pan (12" x 20" x 2-1/2")	2
	Steam Table Pan (12" x 20" x 4")	2
3	Roast Pan (10-7/8" x 19-3/4" x 3-1/2")	2
	Roast Pan (10-7/8" x 19-3/4" x 2-1/4")	2
4	Roasting Pan (18" x 26" x 4")	1
	Deep Roasting Pan (22-1/2" x 20-1/2" x 6-1/2")	1
	Baking Pan (18" x 26" x 2")	1
5	Steam Table Pan (12" x 20" x 4")	2
	Steam Table Pan (12" x 20" x 2")	2
6	Baking Pan (20" x 22" x 4")	1
	Baking Pan (20" x 22" x 2")	1
	Baking Pan (20" x 22" x 1")	1
7	Steam Table Pan (12" x 20" x 2")	2
	Steam Table Pan (12" x 18" x 6")	2
	Bun Pan (18" x 26" x 1")	1
	Half Size Bun Pan (18" x 13" x 1")	2
8	Steam Table Pan (12" x 20" x 4")	2
	Steam Table Pan (12" x 20" x 2")	2
	Cup and Glass Rack (20" x 20")	1
	Service Tray (14" x 18")	2
	Half Size Wire Basket (18" x 13" x 4")	2

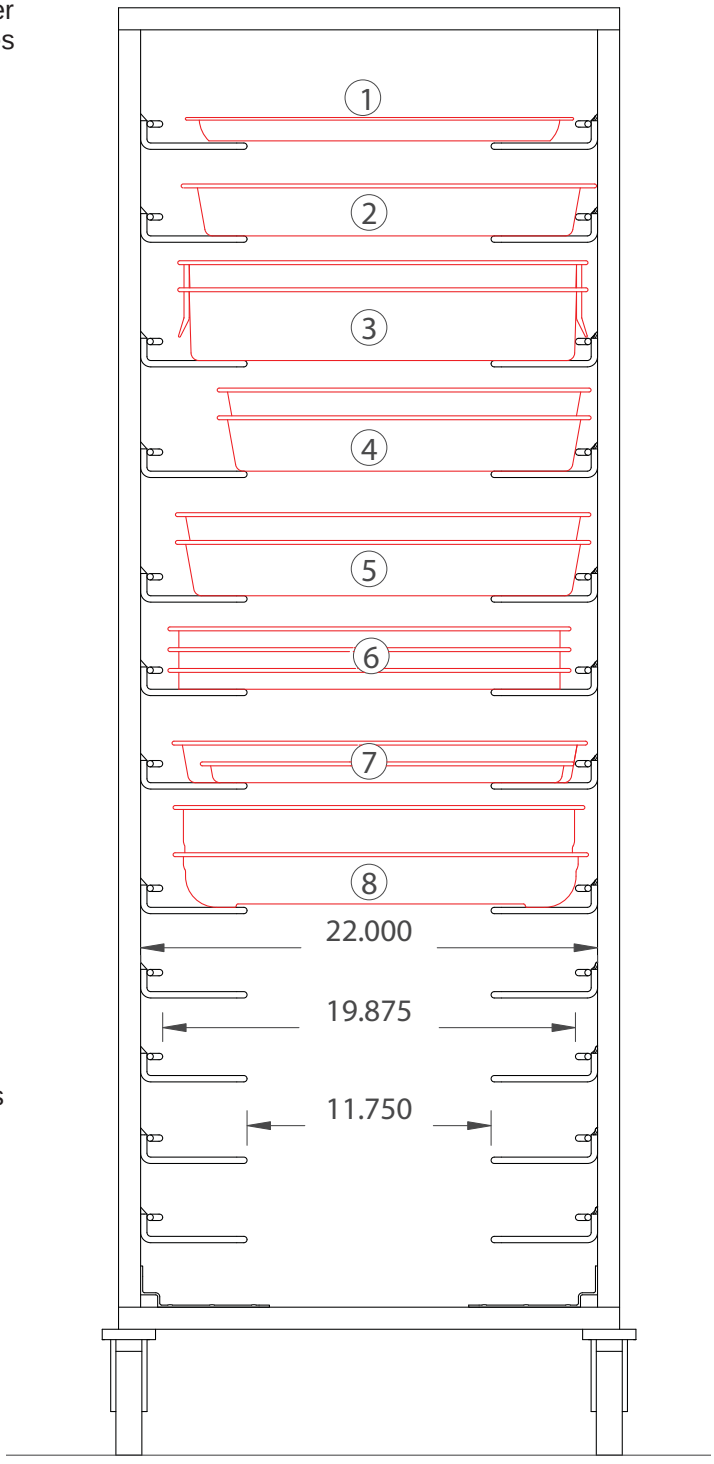

Listed are popular pan sizes in nominal and actual dimensions as identified in the trades:

PANS

Nominal Dimensions	Actual Dimensions
18" x 26"	17-3/4" x 25-3/4"
18" x 24"	17-3/4" x 24"
16" x 22"	16-9/16" x 22-1/2"
15" x 20"	15-1/4" x 20-1/2"
14" x 18"	13-15/16" x 17-13/16"
12" x 16"	12" x 16-3/8"
10" x 14"	10-5/8" x 13-3/4"
9" x 26"	8-3/4" x 25-1/2"
15" x 21" (Canada)	15-1/2" x 21-3/8"

CRES COR®
5925 Heisley Road • Mentor, OH 44060-1833
Phone: 877/CRESCOR • Fax: 440/350-7267
www.crescor.com
© Crescent Metal Products, Inc. 2008 All rights reserved.
Litho in U.S.A.

In line with its policy to continually improve its products, CRES COR reserves the right to change materials and specifications without notice.

CRES COR®

JOB: _____

ITEM NO: _____

INSULATED HOT CABINET MODEL H-138-1834D

FEATURES AND BENEFITS:

- Fully insulated hot cabinet keeps prepared foods at serving temperatures.
- Powerful, yet efficient, 1500 Watt heating system maintains the right temperature to properly hold products. Heats up to 200˚F (93˚C).
- Standard solid state electronic control with large, clear, easy-to-read and operate LED digital display to ensure holding at precise food temperature.
- Internal frame in body maintains structural rigidity.
- Body constructed of non-corrosive, Hi-Tensile aluminum for strength and ease of mobility. One piece extended base protects cabinet body.
- Smooth interior coved corners prevent food particle/grease buildup.
- Self-closing insulated Dutch doors prevent temperature loss; magnetic door gaskets for proper seal. Field reversible for flexibility.
- Standard with right hand hinging; left hand hinging available upon request.
- Full length anti-microbial extruded door handles for “easy open”; positive catch secures door during transport.
- Recessed push/pull handles on both sides prevents damage to walls; allows easy maneuvering.
- Channel pan slides securely hold 18" x 26" pans on 1-1/2" centers without tipping.
- Heavy duty 5" swivel casters, two with brakes. Provides mobility when fully loaded.



H-138-1834D



Standard solid state electronic control with large, clear, easy-to-read and operate LED digital display to ensure holding at precise food temperature

ACCESSORIES and OPTIONS (Available at extra cost):

- ❑ Tempered Glass Door Windows
- ❑ Corner Bumpers
- ❑ Perimeter Bumper
- ❑ Floor Lock (for use with 5" casters)
- ❑ Various Caster Options
- ❑ Removable Cord Set
- ❑ 208 or 240 Volt Service
- ❑ Magnetic Door Latch
- ❑ Upgrade to 2000 Watt Power Unit

See page B-20 for accessory details.

CRES COR®
5925 Heisley Road • Mentor, OH 44060-1833
Phone: 877/CRESCOR • Fax: 440/350-7267
www.crescor.com

GOLD Gold indicates our Best Insulated Hot Cabinets with the best warranty in the industry.
3-Year Parts / 1-Year Labor.

H-138-1834D

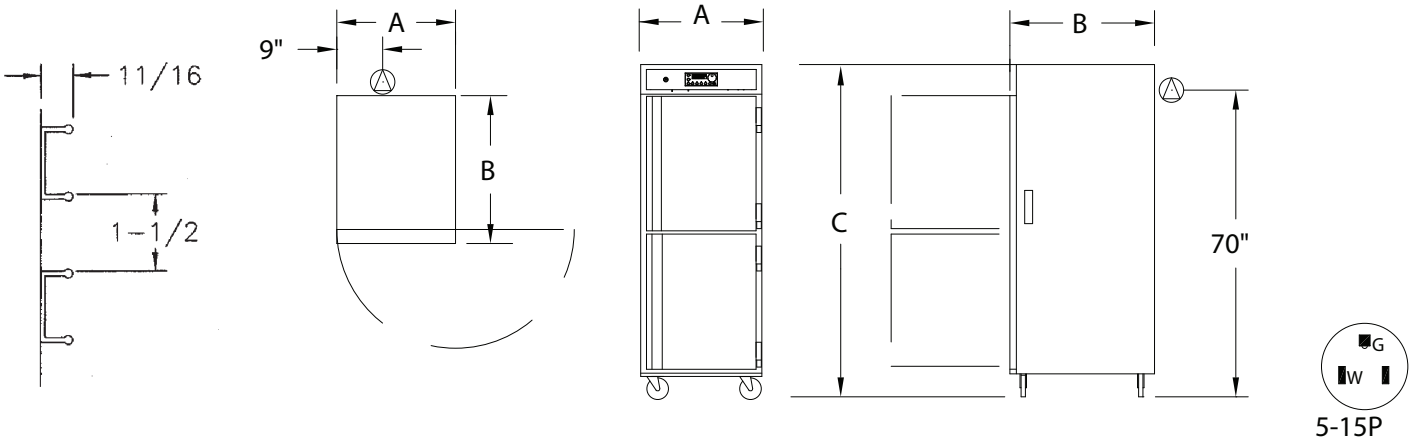

CRES COR MODEL NO.	PAN			DIM "A"	DIM "B"	DIM "C"	INSIDE DIMENSIONS				WEIGHT ACT.
	CAP	SIZE		WIDTH	DEPTH	HEIGHT	WIDTH	DEPTH	HEIGHT		
H-138-1834D	32	18 X 26	IN	28-3/4	32-3/4	73	18-1/16	26-7/8	58	LBS	245
		460 X 660	MM	730	835	1855	460	685	1475	KG	111

NOTES: 1. Send sample pan or tray with order when using any that are not 18" x 26" pans with heavy beaded edges.
2. When ordering bumpers, add 2" to overall dimensions.

GOLD

Gold indicates our Best Insulated Hot Cabinets with the best warranty in the industry.
3-Year Parts / 1-Year Labor.

CABINET:
- Body: .063 aluminum.
- Reinforcement: Internal framework of 18 ga. stainless steel.
- Insulation: Fiberglass, thermal conductivity (K factor) is .23 at 75˚F. 1-1/2" in doors, top, base; 2" in sidewalls.
- Air tunnels: 22ga. stainless steel; lift-out type, mounted on sides.
- Push/pull handles (2): 5” vertical; recessed.
- Interior coved corners.

BASE:
- One piece construction, .125 aluminum.
- Casters: 5" dia., swivel, modulus tires, 1-1/4 wide, load cap. 250 lbs. each, temp. range -45˚/+180˚F. Delrin bearings. Front casters equipped with brakes.

DUTCH DOORS:
- Field reversible.
- Inner and outer: .063 aluminum.
- Extruded handles.
- Hinges: Self-closing, stays open past 90°.
- Gaskets: Perimeter type, magnetic santoprene.
- Pan stop: Embossed.
- Latches: Positive transport type with lock hasp.

PAN SLIDES:
- Channels: Extruded aluminum, 11/16 x 1-1/2 x .100, riveted on 1-1/2" centers.

Scan QR code to view Spec Sheet, Operating Manual, Wiring Diagram or to call Customer Service.

If you need a QR reader visit your App Store on your Smartphone or Tablet.

HOT UNIT COMPONENTS:
- Thermostat: Solid state digital display control, room ambient to 200˚F (93˚C).
- Switch: ON-OFF push button type.
- Power cord: Permanent, 10 ft., 14/3 ga.
- Heater: 1470 Watts.
- Blower motor.
- Vent fan.
- Thermometer: Digital.

POWER REQUIREMENTS:
- 1500 Watts, 120 Volts, 60 Hz., single phase, 12 Amps., 15 Amp. service.

SHORT FORM SPECIFICATIONS

Cres Cor Insulated Hot Cabinet Model H-138-1834C. Solid state electronic controlled times and temperatures. Inner, outer and top liners of .063 aluminum; stainless steel internal frame. No-tip .100 aluminum channel slides for (32) 18"x 26" pans on 1-1/2" centers. Field reversible Dutch doors, made from .063 aluminum. Fiberglass insulation in sides 2"; doors, top, base 1-1/2". Interior coved corners. 1500 Watt, 120 Volt power unit. One piece base, .125 aluminum. 5" swivel modulus casters, Delrin bearings. Load capacity 250 lbs. each. 3-Year Parts / 1-Year Labor warranty. Provide the following accessories: ____ ____ ____ .

CRES COR®
5925 Heisley Road • Mentor, OH 44060-1833
Phone: 877/CRESCOR • Fax: 440/350-7267
www.crescor.com

© Crescent Metal Products, Inc. 2016 All rights reserved.

In line with its policy to continually improve its products, CRES COR reserves the right to change materials and specifications without notice.

Litho in U.S.A.

CRES COR®

PROOF HOT CABINETS **D**

ACCESSORIES

PERIMETER BUMPER
#1405-000

Non-marking reinforced gray rubber strip mounts to base of cabinet for protection. Adds 2" to depth and width.



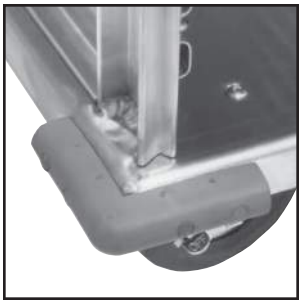

CORNER BUMPERS
#1056-002

Non-marking gray rubber strips mount to corners of cabinet base for protection. Adds 2" to depth and width.

PUSH HANDLE
#1087-000

Stainless steel rod with donut bumper on each end mounts 40" from floor to back or side of cabinet (specify location). Provides maneuverability.





BAIL HANDLE KIT
#1265-000

Two grip handles mounted to each side of cabinet 30" from floor for lifting and maneuvering. Drop to sides when not in use.



CASTER OPTIONS

Standard 5" dia. modulus casters can be substituted with polyurethane wheels or wheels of various diameters. Contact factory for casters available for your application.

CRES COR®
5925 Heisley Road • Mentor, OH 44060-1833
Phone: 877/CRESCOR • Fax: 440/350-7267
www.crescor.com

PAN SIZE CHART
for Universal Angle Models (-UA)

Cres Cor adjustable universal angles are designed to hold trays and pans shown below and in illustration on right.

Quantity of angles and adjustment increments are found on the product catalog page.

PAN TYPES AND SIZES	Capacity per set of angles
Maxi Pan (20-3/4" x 25-1/2" x 1-1/8")	1
1 European Standard Gastro-Norm Pan (20-3/4" x 25-1/2" x 3/4")	1
2 Steam Table Pan (12" x 20" x 2-1/2")	2
Steam Table Pan (12" x 20" x 4")	2
3 Roast Pan (10-7/8" x 19-3/4" x 3-1/2")	2
Roast Pan (10-7/8" x 19-3/4" x 2-1/4")	2
Roasting Pan (18" x 26" x 4")	1
4 Deep Roasting Pan (22-1/2" x 20-1/2" x 6-1/2")	1
Baking Pan (18" x 26" x 2")	1
5 Steam Table Pan (12" x 20" x 4")	2
Steam Table Pan (12" x 20" x 2")	2
Baking Pan (20" x 22" x 4")	1
6 Baking Pan (20" x 22" x 2")	1
Baking Pan (20" x 22" x 1")	1
Steam Table Pan (12" x 20" x 2")	2
7 Steam Table Pan (12" x 18" x 6")	2
Bun Pan (18" x 26" x 1")	1
Half Size Bun Pan (18" x 13" x 1")	2
8 Steam Table Pan (12" x 20" x 4")	2
Steam Table Pan (12" x 20" x 2")	2
Cup and Glass Rack (20" x 20")	1
Service Tray (14" x 18")	2
Half Size Wire Basket (18" x 13" x 4")	2

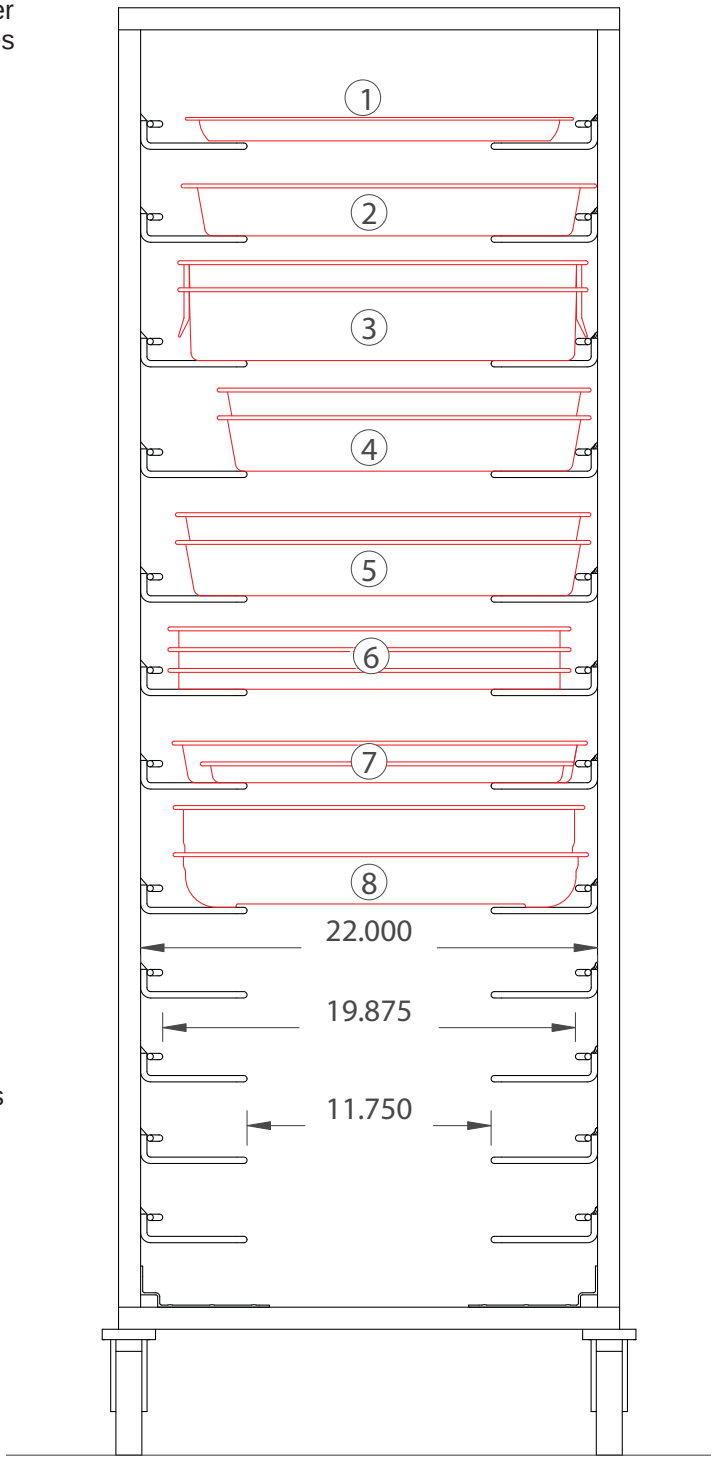

Listed are popular pan sizes in nominal and actual dimensions as identified in the trades:

PANS

Nominal Dimensions	Actual Dimensions
18" x 26"	17-3/4" x 25-3/4"
18" x 24"	17-3/4" x 24"
16" x 22"	16-9/16" x 22-1/2"
15" x 20"	15-1/4" x 20-1/2"
14" x 18"	13-15/16" x 17-13/16"
12" x 16"	12" x 16-3/8"
10" x 14"	10-5/8" x 13-3/4"
9" x 26"	8-3/4" x 25-1/2"
15" x 21" (Canada)	15-1/2" x 21-3/8"

CRES COR®
5925 Heisley Road • Mentor, OH 44060-1833
Phone: 877/CRESCOR • Fax: 440/350-7267
www.crescor.com
© Crescent Metal Products, Inc. 2008 All rights reserved.
Litho in U.S.A.

In line with its policy to continually improve its products, CRES COR reserves the right to change materials and specifications without notice.

Spring Air
Engineering Energy Savings

DYNAFLOW HOOD

FN-B-MB

Box Canopy Filter/Cartridge Type

Dynaflow
UL/ULC listed for 87" mounting height

General Description
The hood is NFPA-96 Type 1 listed for use with all temperature ranges on single row, wall mounted cooking equipment lineups. The unit is ceiling hung with a maximum mounting height of 87" (2209 mm) from the lower edge of the canopy to the floor. The box canopy can be tapered to 11" (279 mm) at the front. The hood is finished with a number 4 finish on exposed sides. The *Dynaflow* hood is available with fluorescent, incandescent, or recessed incandescent lights wired to a J-box.

Efficiency
The *Dynaflow* hood is equipped with UL/ULC listed baffle grease filters or cartridges. Five extraction methods are available with *Dynaflow.*
VE – Value Engineered – standard grease extraction efficiency Stainless steel baffles.
CA – Medium grease extraction efficiency cartridges with adjustable flow baffles.
HE – High grease extraction Efficiency Cascade baffles for Enviro applications and reducing grease discharge from buildings.
EC – Easy Clean Teflon, Lower grease extraction efficiency baffles for hot, heavy grease laden appliances.
Spark Arrestor – standard grease extraction efficiency, for solid fuel appliances.

Exhaust and Supply
The *Dynaflow* design provides the lowest minimum exhaust. The *Dynaflow* hood exhaust volume is based on the appliances below the hood. It's a simple adjustment to fine-tune your ventilator to provide excellent smoke capture with maximum grease extraction.
Heated and/or cooled fresh air ducting is connected to the supply duct collar(s) on the top, front of the hood. The fresh air enters the fire damper in each supply duct connection and

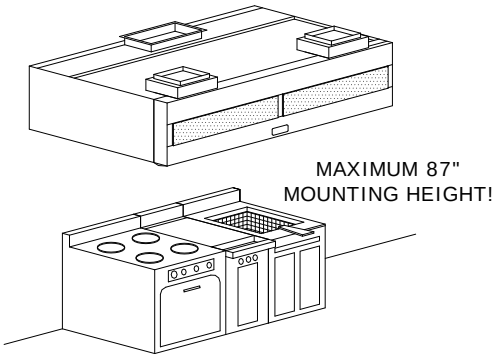

then discharges into the *Dynaflow* plenum. Within the plenum the fresh air is routed to three (3) regions within the boundaries of the appliances.

Three Appliance Boundary Regions

1. **Appliance Region**: Fresh air discharges down through a full length S/S perforated panel toward the kitchen appliances to reduce each appliance net exhaust required.
2. **Chef Region**: Fresh air discharges down through a full length S/S perforated panel towards the chef for a more comfortable work environment in front of the hood.
3. **Kitchen Ambient Region**: The horizontal fresh air discharges through a s/s perforated panel out the front of the hood into the kitchen to provide the exact amount of air to balance the kitchen and ensure optimum capture.

Dynaflow Operation

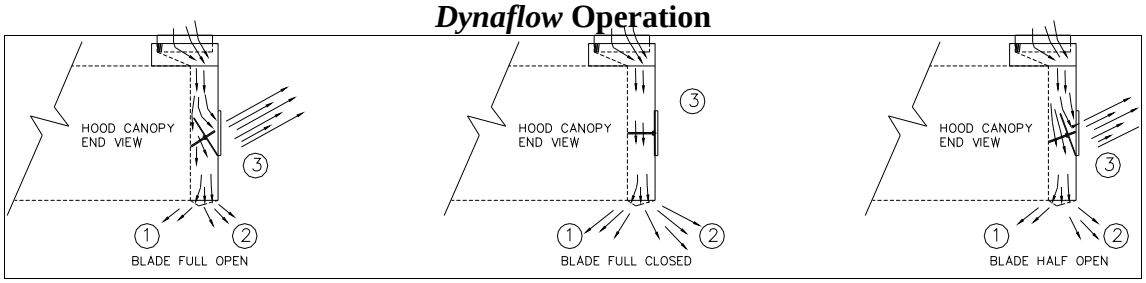

The internal blade (IB) is adjusted to direct fresh air between the Kitchen Ambient (3) Region, the Appliance (1) Region, and Chef(2) Region. The Comfort Tuning Blade (CTB) is adjusted to direct fresh air between the Appliance (1) Region and the Chef(2) Region. The complete kitchen ventilation system is always balanced. The IB and CTB are adjustable every 24" (610mm) along the length of the Dynaflow hood to match the appliances underneath. Dynaflow operates with the lowest minimum exhaust. After your kitchen is complete, appliances can be Relocated, Added, or Removed from under the hood while maintaining maximum capture and chef comfort within the commercial kitchen.

Model FN-B-MB

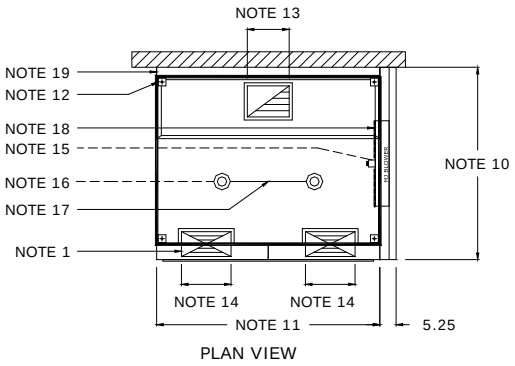

PLAN VIEW

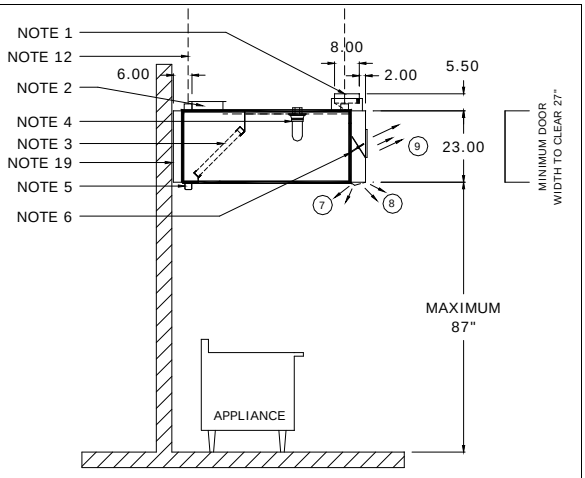

SECTION VIEW

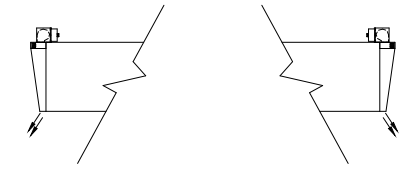

SIDEFLOW LEFT SIDEFLOW RIGHT

VIEWED FROM FRONT OF HOOD

NOTES:
1. SUPPLY DUCT COLLARS WITH FIRE DAMPER
2. EXHAUST DUCT COLLARS WITH 1" PERIMETER FLANGE
3. BAFFLE TYPE FILTERS TYPE VE,CA, HE, EC OR SA.
4. OPTIONAL INCANDESCENT/FLUORESCENT/RECESSED INCANDESCENT FIXTURES
5. GREASE TROUGH WITH GREASE CUP
6. ADJUSTABLE INTERNAL BLADE DAMPER (IB)
7. S/S DISCHARGE TOWARDS APPLIANCES AND CTB
8. S/S DISCHARGE TOWARDS COOK
9. S/S HORIZONTAL DISCHARGE INTO KITCHEN SPACE
10. HOOD WIDTH MINIMUM 47".
11. HOOD LENGTH FROM 3'0" TO 14'0" SECTIONS
12. HANGER ROD LOCATIONS
13. EXHAUST DUCT COLLAR LENGTH TO SUIT EXHAUST VOLUME
14. SUPPLY DUCT COLLAR LENGTH TO SUIT SUPPLY VOLUME
15. POWER TO THE (OPTONAL) ENDFLOW BLOWER - 120V/1/60 - 1.4 AMPS EACH
16. WIRING TO WALL MOUNTED LIGHT SWITCH
17. LIGHT FIXTURES INTERWIRED WITHIN EACH HOOD (OPTIONAL)
18. SIDEFLOW BLOWER ASSEMBLY SHOWN ON RIGHT END (OPTIONAL)
19. AIR SPACE 3" BEHIND HOOD (OPTIONAL)

Spring Air Systems Model No. FN-B-MB Hood Specification

The *Dynaflow* hood, shall be a Spring Air Systems model no. FN-B-MB, box canopy, baffle extractor hood, with exhaust fire damper, "MB" Dynaflow air plenum, UL/ULC listed, NSF certified and built in accordance with the NFPA-96.

The baffle extractors shall be one of the following:

1. VE –Stainless steel baffles.
2. CA – Cartridges with adjustable flow baffles.
3. HE – High Efficiency Cascade
4. EC – Easy Clean Teflon baffles
5. SA – Spark Arrestor for sold fuel appliances.

The unit casing shall be a minimum 18 GA. stainless steel, with No. 4 finish on all exposed surfaces. The hood shall include UL/ULC listed grease filters mounted in an integral stainless steel rack inclined at 45 degrees. The filter rack shall include a full length stainless steel grease gutter and grease cup.

The Dynaflow plenum provides all the fresh air required for the commercial kitchen. The fresh air is routed to three (3) regions within the boundaries of the appliances. Each region includes an aerodynamically designed s/s perforated discharge panel.

The first (1) region discharges through a full length s/s panel located at the bottom of the Dynaflow plenum. Fresh air is directed through the Comfort Tuning Blade (CTB) towards the appliances providing maximum exhaust air reduction. The second (2) Region discharges through a full length s/s angular panel located at the bottom front of the Dynaflow plenum. The fresh air is directed towards the chef to provide a more comfortable work environment in front of the hood.

The third (3) region provides horizontal discharge of fresh air through a s/s perforated panel out the front of the hood into the kitchen. The third region provides the exact amount of fresh air to balance the kitchen and ensure optimum capture.

The s/s front discharge shall include multiple s/s perforated panels every 24" (610mm) long across the front face of the hood. A manually operated Internal Blade (IB) damper shall be located behind each front s/s discharge panel. The CTB and IB dampers are field adjustable through the lower s/s discharge panel. The hood shall have _____ incandescent/fluorescent/recessed incandescent lights evenly spaced along the length of the hood.

Engineering Data

Item Number:	_____
Model Number:	FNBMB_____
Number of Sections:	_____
Hood Length:	_____
Hood Width:	_____
Lights:	_____
Exhaust Volume:	_____
No. of Exhaust Duct Collars:	_____
Size of Exhaust Duct Collar	_____
Exhaust Static Pressure:	_____
Supply Volume:	_____
Supply No. of Duct Collars:	_____
Supply Size of Duct Collar:	_____
Supply Static Pressure:	_____
SideFlow LEFT:	_____
SideFlow RIGHT:	_____

fnbmb

springairsystems.com | 1.866.874.4505

Spring Air
Engineering Energy Savings

©2015 Spring Air Systems Inc.

DATA SHEET

R-102 Restaurant Fire Suppression Systems

Features

- Low pH Agent
- Proven Design
- Reliable Gas Cartridge Operation
- Aesthetically Appealing
- UL Listed – Meets Requirements of UL 300
- ULC Listed – Meets Requirements of ULC/ORD-C1254.6
- CE Marked

Application

The ANSUL® R-102 Restaurant Fire Suppression System is an automatic, pre-engineered, fire suppression system designed to protect areas associated with ventilating equipment including hoods, ducts, plenums, and filters. The system also protects auxiliary grease extraction equipment and cooking equipment such as fryers; griddles and range tops; upright, natural charcoal, or chain-type broilers; electric, lava rock, mesquite, or gas-radiant char-broilers; and woks.

The system is ideally suitable for use in restaurants, hospitals, nursing homes, hotels, schools, airports, and other similar facilities.

Use of the R-102 system is limited to indoor applications or locations that provide weatherproof protection within tested temperature limitations. The regulated release and tank assemblies must be mounted in an area where the air temperature will not fall below 32 °F (0 °C) or exceed 130 °F (54 °C). The system must be designed and installed within the guidelines of the UL/ULC Listed Design, Installation, Recharge, and Maintenance Manual.

System Description

The restaurant fire suppression system is a pre-engineered, wet chemical, cartridge-operated, regulated pressure type with a fixed nozzle agent distribution network. It is listed with Underwriters Laboratories, Inc. (UL/ULC).



004215

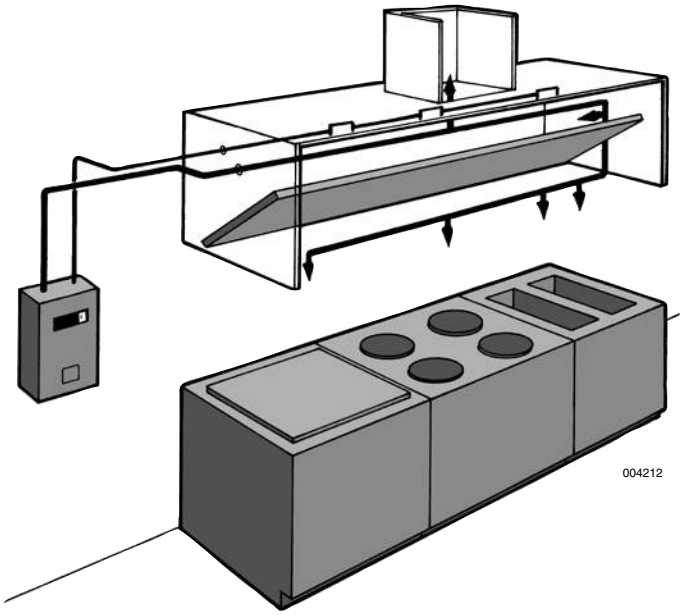

004212

The system is capable of automatic detection and actuation as well as remote manual actuation. Additional equipment is available for building fire alarm panel connections, electrical shutdown and/or interface, and mechanical or electrical gas line shut-off applications.

The detection portion of the fire suppression system allows for automatic detection by means of specific temperature-rated alloy type fusible links, which separate when the temperature exceeds the rating of the link, allowing the regulated release to actuate.

A system owner's guide is available containing basic information pertaining to system operation and maintenance. A detailed technical manual, including system description, design, installation, recharge and resetting instructions, and maintenance procedures, is available to qualified individuals.

The system is installed and serviced by authorized distributors that are trained by the manufacturer.

The basic system consists of an AUTOMAN regulated release assembly which includes a regulated release mechanism and a wet chemical storage tank housed within a single enclosure. Nozzles with blow-off caps, detectors, cartridges, agent, fusible links, and pulley elbows are supplied in separate packages in the quantities needed for fire suppression system arrangements.

Additional equipment includes a remote manual pull station(s), mechanical and electrical gas valves, and electrical switches for automatic equipment and gas line shut-off. Accessories can be added such as alarms, warning lights, etc., to installations where required.

Additional tanks and corresponding equipment can be used in multiple arrangements to allow for larger hazard coverage. Each tank is limited to a listed maximum amount of flow numbers.

Copyright © 2013 Tyco Fire Products LP. / All rights reserved. / Form No. F-2004004-08



Component Description

Wet Chemical Agent – The extinguishing agent is a mixture of organic salts designed for rapid flame knockdown and foam securement of grease related fires. It is available in plastic containers with instructions for wet chemical handling and usage.

Agent Tank – The agent tank is installed in a stainless steel enclosure or wall bracket. The tank is constructed of stainless steel.

Tanks are available in two sizes: 1.5 gallon (5.7 L) and 3.0 gallon (11.4 L). The tanks have a working pressure of 110 psi (7.6 bar), a test pressure of 330 psi (22.8 bar), and a minimum burst pressure of 660 psi (45.5 bar).

The tank includes an adaptor/tube assembly. The adaptor assembly includes a chrome-plated steel adaptor with a 1/4 in. NPT female gas inlet, a 3/8 in. NPT female agent outlet, and a stainless steel agent pick-up tube. The adaptor also contains a bursting disc seal which helps to prevent the siphoning of agent up the pipe during extreme temperature variations.

Regulated Release Mechanism – The regulated release mechanism is a spring-loaded, mechanical/pneumatic type capable of providing the expellant gas supply to one, two, or three agent tanks depending on the capacity of the gas cartridge used. It contains a factory installed regulator deadset at 110 psi (7.6 bar) with an external relief of approximately 180 psi (12.4 bar). It has automatic actuation capabilities by a fusible link detection system and remote manual actuation by a mechanical pull station.

The regulated release mechanism contains a release assembly, regulator, expellant gas hose, and agent storage tank housed in a stainless steel enclosure with cover. The enclosure contains knock-outs for 1/2 in. conduit. The cover contains an opening for a visual status indicator.

It is compatible with mechanical gas shut-off devices; or, when equipped with a field or factory-installed switch and manual reset relay, it is compatible with electric gas line or appliance shut-off devices.

Regulated Actuator Assembly – When more than two agent tanks (or three 3.0 gallon (11.4 L) tanks in certain applications) are required, the regulated actuator is available to provide expellant gas for additional tanks. It is connected to the cartridge receiver outlet of the regulated release mechanism providing simultaneous agent discharge. It contains a regulated actuator deadset at 110 psi (7.6 bar) with an external relief of approximately 180 psi (12.4 bar). It has automatic actuation capabilities using pressure from the regulated release mechanism cartridge.

The regulated actuator assembly contains an actuator, regulator, expellant gas hose, and agent tank housed in a stainless steel enclosure with cover. The enclosure contains knockouts to permit installation of the expellant gas line.

Discharge Nozzles – Each discharge nozzle is tested and listed with the R-102 system for a specific application. Nozzle tips are stamped with the flow number designation (1/2, 1, 2, or 3). Each nozzle must have a metal or rubber blow-off cap to keep the nozzle tip orifice free of cooking grease build-up.

Agent Distribution Hose – Kitchen appliances manufactured with or resting on casters (wheels/rollers) may include an agent distribution hose as a component of the suppression system. This allows the appliance to be moved for cleaning purposes without disconnecting the appliance fire suppression protection. The hose assembly includes a restraining cable kit to limit the appliance movement within the range (length) of the flexible hose.

Flexible Conduit – Flexible conduit allows for quicker installations and the convenience of being able to route the cable over, under and around obstacles. Flexible conduit can be used as a substitute for standard EMT conduit or can be used with EMT conduit.

Flexible conduit can be used only with the Molded Remote Manual Pull Station.

Pull Station Assembly – The remote manual pull station is made out of a molded red composite material. The red color makes the pull station more readily identifiable as the manual means for fire suppression system operation.

The pull station is compatible with the ANSUL Flexible Conduit.

Approvals

- UL/ULC Listed
- CE Marked
- New York City Department of Buildings
- LPCB
- TFRI
- Marine Equipment Directive (MED)
- DNV
- ABS
- Lloyd's Register
- Meets requirements of NFPA 96 (Standard for the Installation of Equipment for the Removal of Smoke and Grease-Laden Vapors from Commercial Cooking Equipment)
- Meets requirements of NFPA 17A (Standard on Wet Chemical Extinguishing Systems)

Ordering Information

Order all system components through your local authorized ANSUL Distributor.

Specifications

An ANSUL R-102 Fire Suppression System shall be furnished. The system shall be capable of protecting all hazard areas associated with cooking equipment.

1.0 GENERAL

1.1 References

1.1.1 Underwriters Laboratories, Inc. (UL)
1.1.1.1 UL Standard 1254
1.1.1.2 UL Standard 300

1.1.2 Underwriters Laboratories of Canada (ULC)
1.1.2.1 ULC/ORD-C 1254.6

1.1.3 National Fire Protection Association (NFPA)
1.1.3.1 NFPA 96
1.1.3.2 NFPA 17A

1.2 Submittals

1.2.1 Submit two sets of manufacturer's data sheets

1.2.2 Submit two sets of piping design drawings

1.3 System Description

1.3.1 The system shall be an automatic fire suppression system using a wet chemical agent for cooking grease related fires.

1.3.2 The system shall be capable of suppressing fires in the areas associated with ventilating equipment including hoods, ducts, plenums, and filters as well as auxiliary grease extraction equipment. The system shall also be capable of suppressing fires in areas associated with cooking equipment, such as fryers; griddles and range tops; upright, natural charcoal, or chain-type broilers; electric, lava rock, mesquite or gas-radiant char-broilers; and woks.

1.3.3 The system shall be the pre-engineered type having minimum and maximum guidelines established by the manufacturer and listed by Underwriters Laboratories (UL/ULC).

1.3.4 The system shall be installed and serviced by personnel trained by the manufacturer.

1.3.5 The system shall be capable of protecting cooking appliances by utilizing either dedicated appliance protection and/or overlapping appliance protection.

1.4 Quality Control

1.4.1 Manufacturer: The R-102 Restaurant Fire Suppression System shall be manufactured by a company with at least forty years experience in the design and manufacture of pre-engineered fire suppression systems. The manufacturer shall be ISO 9001 registered.

1.4.2 Certificates: The wet agent shall be a specially formulated, aqueous solution of organic salts with a pH range between 7.7 – 8.7, designed for flame knockdown and foam securement of grease-related fires.

1.5 Warranty, Disclaimer, and Limitations

1.5.1 The pre-engineered restaurant fire suppression system components shall be warranted for five years from date of delivery against defects in workmanship and material.

1.6 Delivery

1.6.1 Packaging: All system components shall be securely packaged to provide protection during shipment.

1.7 Environmental Conditions

1.7.1 The R-102 system shall be capable of operating within a temperature range of 32 °F to 130 °F (0 °C to 54 °C).

2.0 PRODUCT

2.1 Manufacturer

2.1.1 Tyco Fire Protection Products, One Stanton Street, Marinette, Wisconsin 54143-2542, Telephone (715) 735-7411.

2.2 Components

2.2.1 The basic system shall consist of an AUTOMAN regulated release assembly which includes a regulated release mechanism and a wet chemical storage tank housed within a single enclosure. Nozzles, blow-off caps, detectors, cartridges, agent, fusible links, and pulley elbows shall be supplied in separate packages in the quantities needed for fire suppression system arrangements. Additional equipment shall include remote manual pull station, mechanical and electrical gas valves, and electrical switches for automatic equipment and gas line shut-off, and building fire alarm control panel interface.

2.2.2 Wet Chemical Agent: The extinguishing agent shall be a specially formulated, aqueous solution of organic salts with a pH range between 7.7 – 8.7, designed for flame knockdown and foam securement of grease related fires.

2.2.3 Agent Tank: The agent tank shall be installed in a stainless steel enclosure or wall bracket. The tank shall be constructed of stainless steel. Tanks shall be available in two sizes; 1.5 gallon (5.7 L) and 3.0 gal (11.4 L).The tank shall have a working pressure of 110 psi (7.6 bar), a test pressure of 330 psi (22.8 bar), and a minimum burst pressure of 660 psi (45.5 bar). The tank shall include an adaptor/tube assembly containing a burst disc union.

2.2.4 Regulated Release Mechanism: The regulated release mechanism shall be a spring-loaded, mechanical/pneumatic type capable of providing the expellant gas supply to one or two agent tanks depending on the capacity of the gas cartridge used or three 3.0 gallon (11.4 L) agent storage tanks in certain applications. It shall contain a factory installed regulator deadset at 110 psi (7.6 bar) with an external relief of approximately 180 psi (12.4 bar).

It shall have the following actuation capabilities: automatic actuation by a fusible link detection system and remote manual actuation by a mechanical pull station.

The regulated release mechanism shall contain a release assembly, regulator, expellant gas hose, and agent storage tank housed in a stainless steel enclosure with cover. The enclosure shall contain knock-outs for 1/2 in. conduit. The cover shall contain an opening for a visual status indicator.

It shall be compatible with mechanical gas shut-off devices; or, when equipped with a field or factory-installed switch(es), it shall be compatible with electric gas line or appliance shut-off devices, or connections to a building fire alarm control panel.

Specifications (Continued)

2.2.5 Regulated Actuator Assembly: When more than two agent tanks or three agent tanks in certain applications are required, the regulated actuator shall be available to provide expellant gas for additional tanks. It shall be connected to the cartridge receiver outlet of the regulated release mechanism providing simultaneous agent discharge. The regulator shall be deadset at 110 psi (7.6 bar) with an external relief of approximately 180 psi (12.4 bar).The regulated actuator assembly shall contain an actuator, regulator, expellant gas hose, and agent tank housed in a stainless steel enclosure with cover. The enclosure shall contain knockouts to permit installation of the expellant gas line.

2.2.6 Discharge Nozzles: Each discharge nozzle shall be tested and listed with the R-102 system for a specific application. Nozzles tips shall be stamped with the flow number designation (1/2, 1, 2, or 3). Each nozzle shall have a metal or rubber blow-off cap to keep the nozzle tip orifice free of cooking grease build-up.

2.2.7 Distribution Piping: Distribution piping shall be Schedule 40 black iron, chrome-plated, or stainless steel conforming to ASTM A120, A53, or A106.

2.2.8 Detectors: The detectors shall be the fusible link style designed to separate at a specific temperature.

2.2.9 Cartridges: The cartridge shall be a sealed steel pressure vessel containing either carbon dioxide or nitrogen gas. The cartridge seal shall be designed to be punctured by the releasing device supplying the required pressure to expel wet chemical agent from the storage tank.

2.2.10 Agent Distribution Hose: An optional agent distribution hose shall be available for kitchen appliances manufactured with or resting on casters (wheels/rollers). This shall allow the appliance to be moved for cleaning purposes without disconnecting the appliance fire suppression protection. Hose assembly shall include a restraining cable kit to limit the appliance movement within the range (length) of the flexible hose.

2.2.11 Flexible Conduit: The manufacturer supplying the Restaurant Fire Suppression System shall offer flexible conduit as an option to rigid EMT conduit for the installation of pull stations and/or mechanical gas valves. The flexible conduit shall be UL Listed and include all approved components for proper installation.

2.2.12 Pull Station Assembly: The Fire Suppression System shall include a remote pull station for manual system actuation. The pull station shall be designed to include a built-in guard to protect the pull handle. The pull station shall also be designed with a pull handle to allow for three finger operation and shall be red in color for quick visibility.

3.0 IMPLEMENTATION

3.1 Installation

3.1.1 The R-102 fire suppression system shall be designed, installed, inspected, maintained, and recharged in accordance with the manufacturer's listed instruction manual.

3.2 Training

3.2.1 Training shall be conducted by representatives of the manufacturer.

ANSUL, R-102, and the product names listed in this material are marks and/or registered marks. Unauthorized use is strictly prohibited.

BLODGETT

DFG-100

Full-Size, Standard Depth Dual Flow Gas Convection Oven



Project _____

Item No. _____

Quantity _____

DFG-100

Standard depth baking compartment - accepts five 18" x 26" standard full-size baking pans in left-to-right positions.

All data is shown per oven section, unless otherwise indicated.

Refer to operator manual specification chart for listed model names.

EXTERIOR CONSTRUCTION

- Stainless steel front, top, and sides
- Dual pane thermal glass windows encased in stainless steel door frames
- Powder coated door handle with simultaneous door operation
- Triple-mounted pressure lock door design with turnbuckle assembly
- Modular slide out front control panel for easy cleaning
- Solid mineral fiber insulation at top, back, sides and bottom

INTERIOR CONSTRUCTION

- Full angle-iron frame
- Double-sided porcelainized baking compartment liner (14 gauge)
- Aluminized steel combustion chamber
- Dual inlet blower wheel
- Five chrome-plated racks, eleven rack positions with a minimum of 1-5/8" (41mm) spacing

OPERATION

- Dual Flow Gas system combines direct and indirect heat
- Electronic spark ignition control system
- Removable dual tube burners
- Pressure regulator
- Manual gas service cut-off switch located on the front of the control panel
- Air mixers with adjustable air shutters
- Solid state thermostat with temperature control range of 200°F (93°C) to 500°F (260°C)
- Two speed fan motor
- 1/2 horsepower blower motor with automatic thermal overload protection
- Control area cooling fan
- Interior oven lights

STANDARD FEATURES

- SSD - Solid state digital control with LED display, Cook & Hold and Pulse Plus®
- 25" (635mm) adjustable stainless steel legs (for single units)
- 6" (152mm) adjustable stainless steel legs (for double sections)
- Draft diverter or draft hood for venting (select one)
- Three year parts and two year labor warranty
- Five year limited oven door warranty*
- * For all international markets, contact your

** For all international markets, contact your local distributor.*

NOTE: The company reserves the right to make substitutions of components without prior notice

OPTIONS AND ACCESSORIES

(AT ADDITIONAL CHARGE)

- **Legs, casters & stands**
  - ❑ 6" (152mm) seismic legs
  - ❑ 6" (152mm) casters
  - ❑ 4" (102mm) low profile casters (double only)
  - ❑ 25" (635mm) stainless steel stand w/rack guides
  - ❑ 29" (737mm) stainless steel, fully welded open stand with pan supports
- **Gas hose w/quick disconnect restraining device**
  - ❑ 48" (1219mm) hose
  - ❑ 36" (914mm) hose
- ❑ SSI-M - Solid state infinite control w/manual timer
- ❑ Stainless steel oven liner
- ❑ Extra oven racks
- ❑ Stainless steel solid back panel
- ❑ Gas manifold (for double sections)
- ❑ Prison package (includes security control panel and stainless steel back)
- ❑ Flue connector

OPTIONS AND ACCESSORIES

(AT NO ADDITIONAL CHARGE)

- ❑ Solid stainless steel doors

www.blodgett.com
42 Allen Martin Drive, Essex Junction, VT 05452
Phone: (802) 658-6600 | Fax: (802) 864-0183

P/N 35023 Rev AL (6/22)

BLODGETT

DFG-100

APPROVAL/STAMP

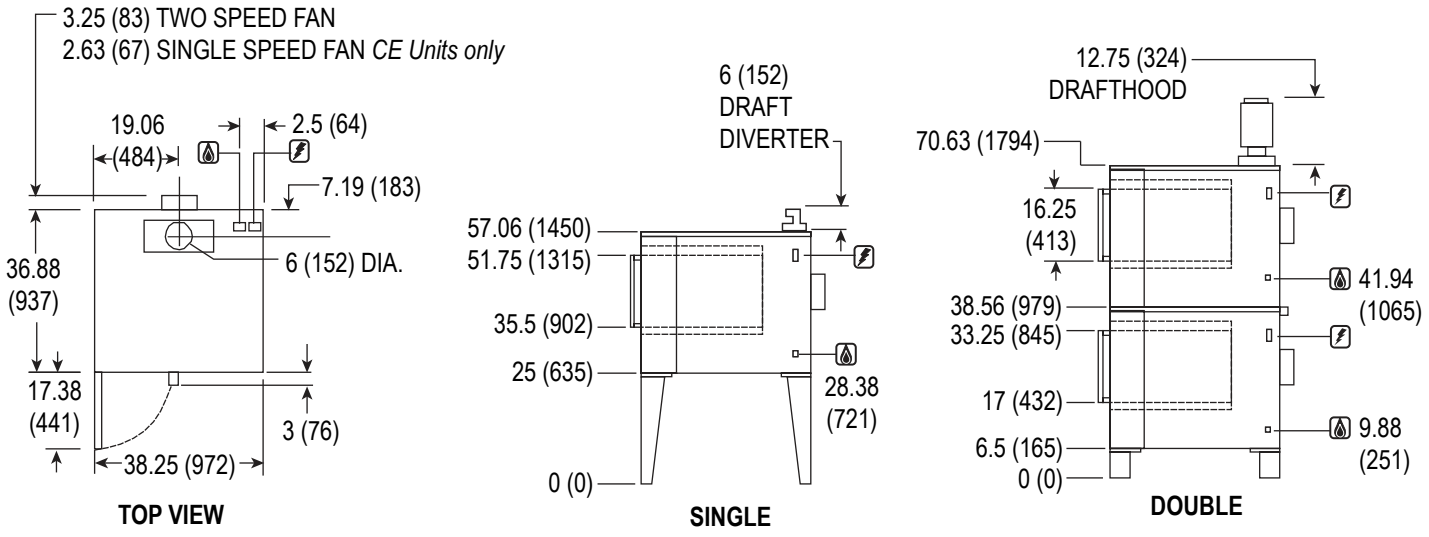

DIMENSIONS ARE IN INCHES (MM)

SHORT FORM SPECIFICATIONS Provide Blodgett full-size convection oven model DFG-100, (single/double) compartment. Each compartment shall have (porcelainized/stainless) steel liner and shall accept five I8" x 26" standard full-size bake pans. Stainless steel front, top and sides. Doors shall be (solid stainless steel/have dual pane thermal glass windows) with single powder coated handle and simultaneous operation. Unit shall be gas heated with electronic spark ignition and shall cook by means of a dual-flow system combining direct and indirect heat with a gas shutoff switch on the front of the control panel. Air in baking chamber distributed by dual inlet blower wheel powered by a two-speed, 1/2 HP motor with thermal overload protection. Each chamber shall be fitted with two commerical oven lamps, and five chrome-plated removable racks. Control panel shall be recessed with solid state digital control with LED display, Cook & Hold and Pulse Plus. Provide three years parts, two year labor and five year door warranty. Provide options and accessories as indicated.

DIMENSIONS

Floor space	38-1/4" (972mm) W x 36-7/8" (937mm) D
Interior	29" (737mm) W x 20" (508mm) H x 24-1/4" (616mm) D
If oven is on casters	
Single	Add 4-1/2" (114mm) to height
Double	Height dimensions remain the same
Double Low Profile	Subtract 2.5" (64mm) from all height dimensions

PRODUCT CLEARANCE

From combustible and non-combustible construction

Oven sides	2" (51mm)
Oven back	0" (0mm)

MINIMUM ENTRY CLEARANCE

Uncrated	32-1/16" (814mm)
Crated	37-1/2" (953mm)

SHIPPING INFORMATION

Approx. Weight

Single	600 lbs. (273 kg)
Double	1295 lbs. (589 kg)

Crate Size

37-1/2" (952mm) x 43-1/2" (1105mm) x 51-3/4" (1315mm)
(2 crates required for double)

GAS SUPPLY (per section)

3/4" NPT

Inlet Pressure

Natural Gas	7.0" W.C. min. – 10.5" W.C. max.
Propane	11.0" W.C. min. – 13.0" W.C. max.

Manifold Pressure

Natural Gas	3.5" W.C.
Propane	10" W.C.

MAXIMUM INPUT

55,000 BTU/hr (16.2 Kw) per oven section

POWER SUPPLY

115 VAC, 1 phase, 6 Amp, 60 Hz., 2-wire with ground, 1/2 H.P., 2 speed motor, 1120 and 1710 RPM

6' (1.8m) electric cord set furnished on 115 VAC ovens only.

FOR COMMERCIAL USE ONLY

Item # _____ C.S.I. Section 11420

HEAVY DUTY COOKING

HEAVY DUTY GAS RANGE
4-BURNERS / 24" WIDE GAS RANGE

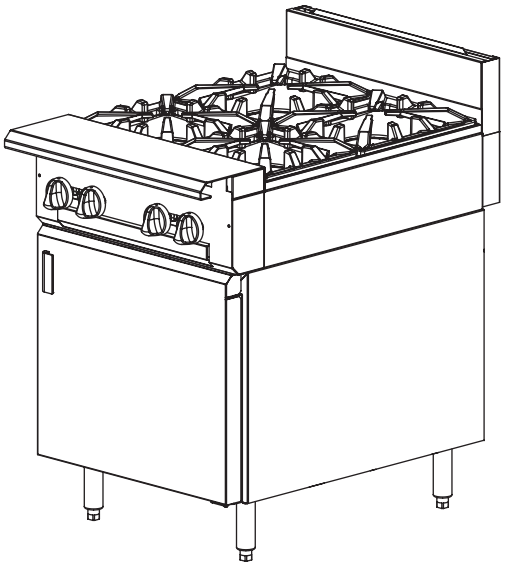

Model V2B24B
(shown on cabinet base)

- ☐ **V4B24** 4-Burners / Modular
- ☐ **V4B24B** 4-Burners / Cabinet Base
- ☐ **V4BU24** 4-Burners Set-Up / Modular
- ☐ **V4BU24B** 4-Burners Set-Up / Cabinet Base

STANDARD FEATURES

- Stainless steel front, front top ledge, burner box, sides, base, and stub back
- 1¼" diameter front gas manifold with 1¼" rear gas connection (capped)
- 35,000 BTU/hr. open top burners with lift off heads
- Individual pilots and controls for each burner
- Heavy-duty cast grates
- 4" stainless steel stub riser
- 6" adjustable stainless steel legs for cabinet base units (no legs for modular model)
- Stainless steel cabinet base door
- Universal rack guides, with one removable shelf (cabinet base)
- One year limited parts and labor warranty

SPECIFICATIONS

24" wide heavy duty gas range, Vulcan Model No. V4B24 (modular) and V4B24B (cabinet base) or V4BU24 (modular) and V4BU24B (cabinet base). Stainless steel front, plate ledge, front top ledge with pull-out condiment rails, sides, base, stub back and 6" adjustable legs. 1¼" diameter front gas manifold and 1¼" rear gas connection, capped. Heavy cast aeration bowls with removable cast top grates. Front grate: 11½" x 11½", rear grate: 11½" x 14". Four 35,000 BTU/hr. heavy cast, two-piece open burners with individual pilots and controls for each burner. Total input 140,000 BTU/hr.

Exterior Dimensions:

36¾"d x 24"w x 36"h on 6" adjustable legs

OPTIONAL FEATURES (Factory Installed)

- ☐ Cap and cover front manifold
- ☐ 4" adjustable flanged feet for modular models
- ☐ Less legs for dolly mounting of cabinet base models
- ☐ 3" high toe base for curb mounting

ACCESSORIES (Packaged & Sold Separately)

- ☐ ¾", 1", or 1¼" gas pressure regulator (specify gas type – pack loose)
- ☐ Set of 4 casters, 6" high (two locking)
- ☐ 6" adjustable flanged feet for cabinet base models
- ☐ Extra removable shelves for use with Universal rack guides (cabinet base)
- ☐ "S" Grates
- ☐ Banking strip
- ☐ 10", 22", or 34" high back risers (no shelf)
- ☐ 22" single deck solid or flo-thru high shelf risers
- ☐ 34" double deck solid or flo-thru high shelf risers
- ☐ Flexible gas hose with quick disconnect and restraining device
- ☐ Common condiment type, telescoping plate rail (starting at 24" length)

VULCAN
a division of ITW Food Equipment Group LLC
P.O. Box 696 ■ Louisville, KY 40201 ■ Toll-free: 1-800-814-2028 ■ Local: 502-778-2791 ■ Quote & Order Fax: 1-800-444-0602

HEAVY DUTY COOKING

HEAVY DUTY GAS RANGE
4-BURNERS / 24" WIDE GAS RANGE

INSTALLATION INSTRUCTIONS

1. A properly sized gas pressure regulator suitable for battery or single unit application must be furnished and installed. Natural gas 6.0" W.C., propane gas 10.0" W.C.
2. An adequate ventilation system is required for commercial cooking equipment. Information may be obtained by writing to the National Fire Protection Association, 1 Batterymarch Park, Quincy, MA 02269, www.NFPA.org. When writing, refer to NFPA No. 96.
3. These units are manufactured for installation in accordance with ANSZ223.1A (latest edition), National Fuel Gas Code. Copies may be obtained from The American Gas Association, 400 N Capitol St. NW, Washington, DC 20001, www.AGA.org.
4. **Clearances**

	Rear	Sides
Combustible	10"	10"
Non-combustible	0"	0"

5. For proper combustion, install equipment on adjustable legs or casters. On curb or platform, allow 3½" front overhang. Toe base with leveling bolts are required for curb installation. Specify when ordering.
6. Cannot be batteried with GH series equipment.
7. This appliance is manufactured for commercial installation only and is not intended for home use.

NOTE: In line with its policy to continually improve its product, Vulcan reserves the right to change materials and specifications without notice.

Specify type of gas when ordering.
Specify altitude when above 2,000 feet.

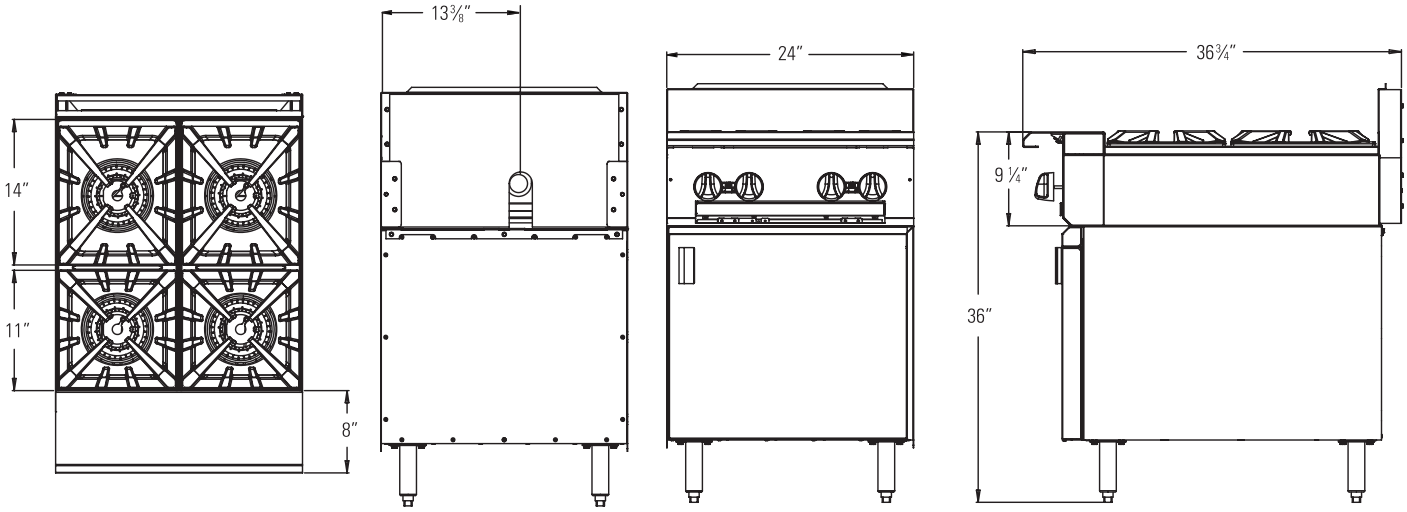

TOP CONFIGURATION	MODEL NUMBER	DESCRIPTION	TOTAL INPUT BTU / HR	SHIPPING WEIGHT LBS / KG
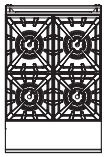	**V4B24**	4-Burners / Modular	140,000	220 / 100
	V4B24B	4-Burners / Cabinet Base	140,000	295 / 134
	V4BU24	4-Burners / Step-Up / Modular	140,000	220 / 100
	V4BU24B	4-Burners / Step-Up / Cabinet Base	140,000	295 / 134

This appliance is manufactured for commercial use only and is not intended for home use.

VULCAN
a division of ITW Food Equipment Group LLC
P.O. Box 696 ■ Louisville, KY 40201 ■ Toll-free: 1-800-814-2028 ■ Local: 502-778-2791 ■ Quote & Order Fax: 1-800-444-0602

NOTE: In line with its policy to continually improve its products, Vulcan reserves the right to change materials and specifications without notice.

Item # _____ C.S.I. Section 11420

HEAVY DUTY COOKING

HEAVY DUTY GAS RANGE
24" WIDE THERMOSTATICALLY CONTROLLED GAS RANGE

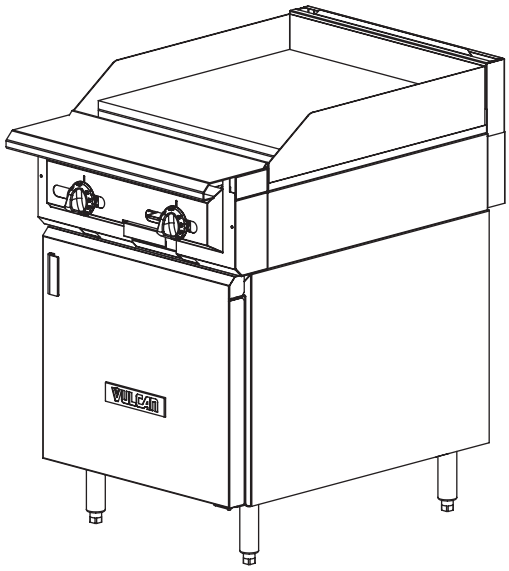

Model VGT24B
(shown on cabinet base)

☐ **VGT24** 24" T-Stat Griddle / Modular
☐ **VGT24B** 24" T-Stat Griddle / Cabinet Base

STANDARD FEATURES

- Stainless steel front, front top ledge, burner box, sides, base, and stub back
- 1¼" diameter front gas manifold with 1¼" rear gas connection (capped)
- 30,000 BTU/hr. burners (2 each)
- Snap-action thermostats
- Temperature range from 150° - 450°F
- Individual pilots and controls for each burner
- ¾" polished steel griddle plate
- 4" high side splash
- 4" stainless steel stub riser
- 6" adjustable stainless steel legs for floor models (no legs for modular model)
- Stainless steel cabinet base door
- Universal rack guides, with one shelf (cabinet base)
- One year limited parts and labor warranty

OPTIONAL FEATURES (Factory Installed)

☐ Cap and cover front manifold
☐ ¾" Rapid Recovery™ griddle plate
☐ 4" adjustable flanged feet for modular models
☐ Less legs for dolly mounting of cabinet base models
☐ 3" high toe base for curb mounting

ACCESSORIES (Packaged & Sold Separately)

☐ ¾", 1", or 1¼" gas pressure regulator (specify gas type – pack loose)
☐ Set of 4 casters, 6" high (two locking)
☐ 6" adjustable flanged feet for cabinet base models
☐ Extra removable shelves for use with Universal rack guides (cabinet base)
☐ Banking strip
☐ 10", 22", or 34" high back risers (no shelf)
☐ 22" single deck solid or flo-thru high shelf risers
☐ 34" double deck solid or flo-thru high shelf risers
☐ Flexible gas hose with quick disconnect and restraining device
☐ Common condiment type, telescoping plate rail (starting at 24" length)

SPECIFICATIONS

24" wide heavy duty gas range, Vulcan Model No. VGT24 (modular) or VGT24B (cabinet base). Stainless steel front, sides, plate ledge, front top ledge with pull-out condiment rails, and stub back. 1¼" diameter front gas manifold and 1¼" rear gas connection, capped. Two 30,000 BTU/hr. burners. Two snap-action thermostats, individual pilots and controls for each burner. ¾" polished steel griddle plate with 4" high side splashes (¾" composite plate with stainless cooking surface with Rapid Recovery™ option). Total input 60,000 BTU/hr.

Exterior Dimensions:

36¾"d x 24"w x 36"h on 6" adjustable legs

a division of ITW Food Equipment Group LLC
P.O. Box 696 ■ Louisville, KY 40201 ■ Toll-free: 1-800-814-2028 ■ Local: 502-778-2791 ■ Quote & Order Fax: 1-800-444-0602

HEAVY DUTY COOKING

HEAVY DUTY GAS RANGE
24" WIDE THERMOSTATICALLY CONTROLLED GAS RANGE

INSTALLATION INSTRUCTIONS

1. A properly sized gas pressure regulator suitable for battery or single unit application must be furnished and installed. Natural gas 6.0" W.C., propane gas 10.0" W.C.
2. An adequate ventilation system is required for commercial cooking equipment. Information may be obtained by writing to the National Fire Protection Association, 1 Batterymarch Park, Quincy, MA 02269, www.NFPA.org. When writing, refer to NFPA No. 96.
3. These units are manufactured for installation in accordance with ANSZ223.1A (latest edition), National Fuel Gas Code. Copies may be obtained from The American Gas Association, 400 N Capitol St. NW, Washington, DC 20001, www.AGA.org.
4. **Clearances**

	Rear	Sides
Combustible	10"	10"
Non-combustible	0"	0"

5. For proper combustion, install equipment on adjustable legs or casters. On curb or platform, allow 3½" front overhang. Toe base with leveling bolts are required for curb installation. Specify when ordering.
6. Cannot be batteried with GH series equipment.
7. This appliance is manufactured for commercial installation only and is not intended for home use.

NOTE: In line with its policy to continually improve its product, Vulcan reserves the right to change materials and specifications without notice.

Specify type of gas when ordering.
Specify altitude when above 2,000 feet.

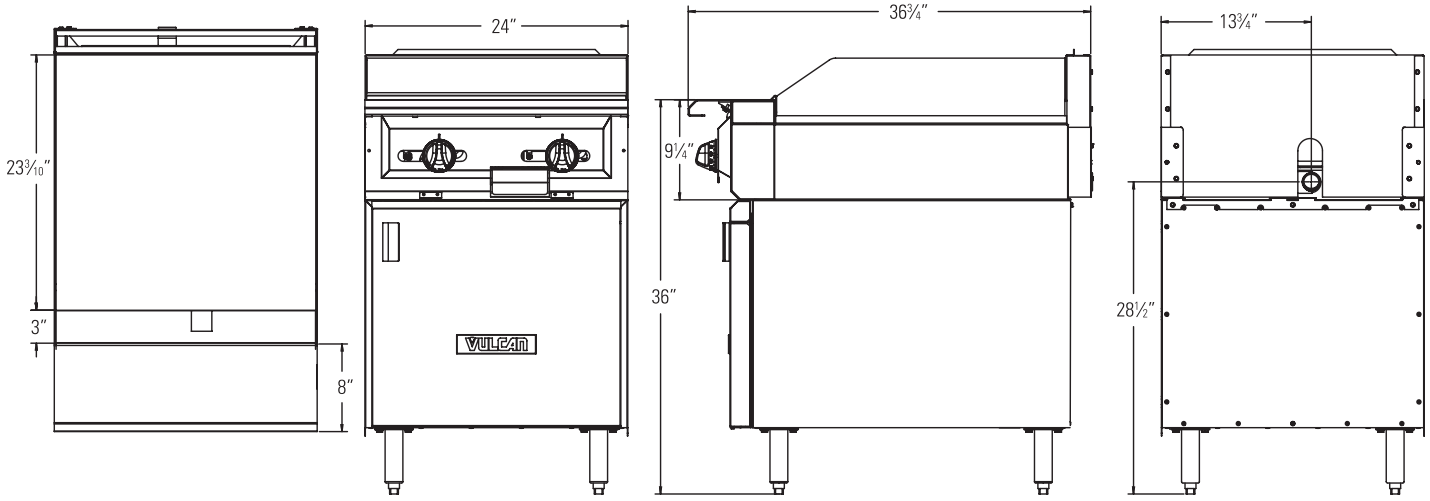

TOP CONFIGURATION	MODEL NUMBER	DESCRIPTION	TOTAL INPUT BTU / HR	SHIPPING WEIGHT LBS / KG
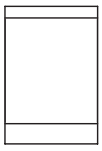	**VGT24**	24" T-Stat Griddle / Modular	60,000	285 / 130
	VGT24B	24" T-Stat Griddle / Cabinet Base	60,000	360 / 164

VULCAN
a division of ITW Food Equipment Group LLC
P.O. Box 696 ■ Louisville, KY 40201 ■ Toll-free: 1-800-814-2028 ■ Local: 502-778-2791 ■ Quote & Order Fax: 1-800-444-0602

NOTE: In line with its policy to continually improve its products, Vulcan reserves the right to change materials and specifications without notice.

Item # _____ C.S.I. Section 11420

HEAVY DUTY COOKING

HEAVY DUTY GAS RANGE
REFRIGERATED EQUIPMENT STANDS



Model VSC84

NSF c UL us LISTED

SPECIFICATIONS

Vulcan VSC Series refrigerated equipment stands are designed for use along the cookline where cabinet strength and system performance really matter. Their rear mounted evaporators keep food cold in very warm kitchen environments despite frequent drawer openings. They also offer greater capacity, as each drawer accommodates 6" deep pans, and a variety of other features making them ideal for the equipment stand application. Drawers include a stay open and self-closing feature, as well as a guard to protect the gasket from damage. Grease accumulation on the condenser is prevented by an easy to remove and clean filter. Even installation is facilitated through use of factory installed casters mounted on an adjustable rail, making it easy to position these around such common floor obsructions as drains, junction boxes, and gas connections.

- ☐ **VSC36, VSC48, VSC60** 2 Drawer Models
- ☐ **VSC72, VSC84** 4 Drawer Models
- ☐ **VSC96** 6 Drawer Model

STANDARD FEATURES

- Stainless steel exterior and interior
- Custom stainless steel top for unitized assembly with V Series range components only
- Microprocessor control system
- Balanced, self-contained refrigeration system using R-404A
- Front-breathing design for “zero-clearance” installation
- Non-electric automatic condensate evaporator
- Condenser filter
- Off-cycle evaporator defrost
- Controllable anti-condensate drawer perimeter heaters
- Full length drawer handle with gasket guard
- Magnetic snap-in door gaskets
- Drawers accommodate 12" x 20" x 6" pans (pans by others)
- Self-closing drawers with stay open feature
- 14-gauge stainless steel drawer slide
- Side, front and rear access panel for ease of service and maintenance
- NEMA 5-15P plug with 9' cord and cord retainer
- 3" casters on adjustable channel moving system
- Three year parts & labor warranty
- Two years additional compressor parts warranty

OPTIONS

- ☐ Set of 6" high stainless steel legs in lieu of casters
- ☐ 6" cabinet length extension
- ☐ Stainless steel exterior finished back
- ☐ Remote applications
- ☐ System relocated to right

VULCAN
a division of ITW Food Equipment Group LLC
P.O. Box 696 ■ Louisville, KY 40201 ■ Toll-free: 1-800-814-2028 ■ Local: 502-778-2791 ■ Quote & Order Fax: 1-800-444-0602

HEAVY DUTY COOKING

HEAVY DUTY GAS RANGE
REFRIGERATED EQUIPMENT STANDS

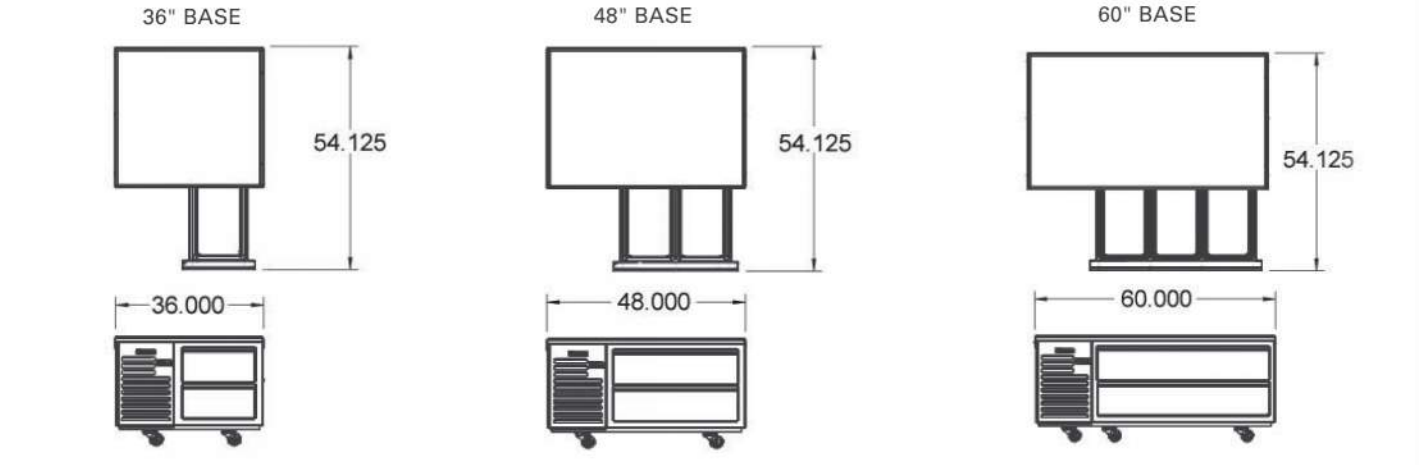

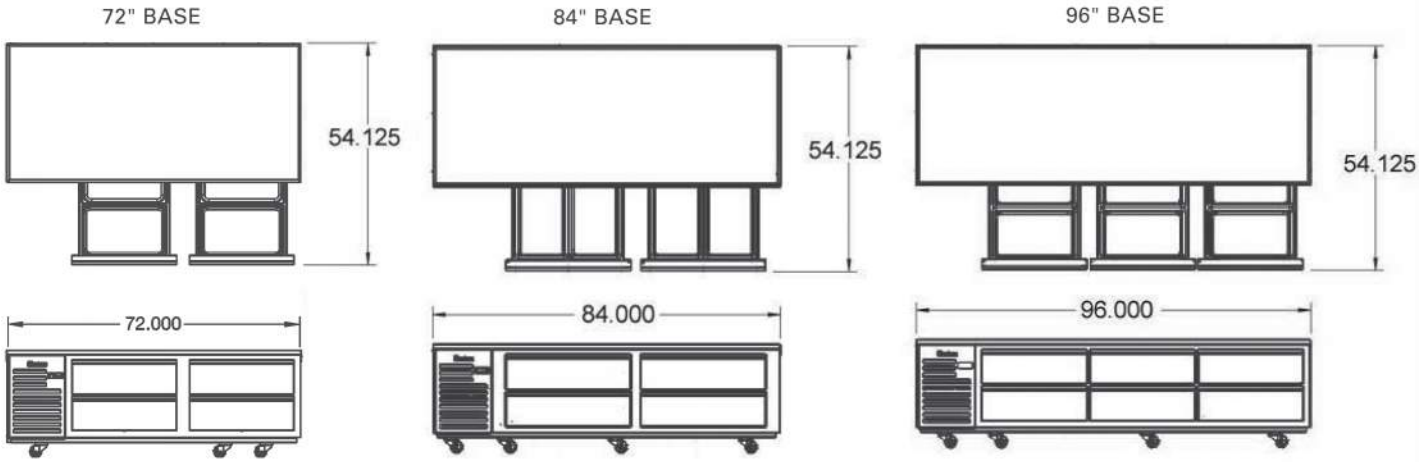

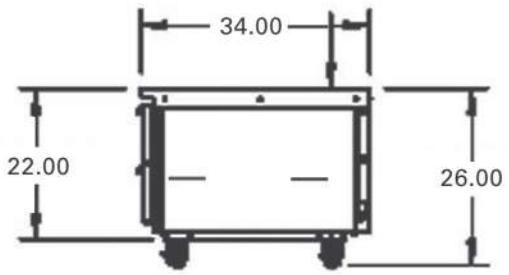

Section - All Models



All units equipped with one NEMA 5-15P plug.

VULCAN
a division of ITW Food Equipment Group LLC
P.O. Box 696 ■ Louisville, KY 40201 ■ Toll-free: 1-800-814-2028 ■ Local: 502-778-2791 ■ Quote & Order Fax: 1-800-444-0602

NOTE: In line with its policy to continually improve its products, Vulcan reserves the right to change materials and specifications without notice.

HEAVY DUTY COOKING

VULCAN

HEAVY DUTY GAS RANGE
REFRIGERATED EQUIPMENT STANDS

INSTALLATION INSTRUCTIONS

Construction, Hardware and Insulation
Cabinet exterior front, sides, louver assembly and drawers are constructed of 20-gauge 430 stainless steel, exterior back and bottom are constructed of heavy gauge galvanized steel. Cabinet interior sides are constructed of 22-gauge 400 series stainless steel, top and bottom are constructed of 22-gauge 300 series stainless steel. A set of 3" high casters are included standard. Vinyl magnetic snap-in drawer gasket assures tight drawer seal. Both the cabinet and drawers are insulated with an average of 2" thick high density, non-CFC, foamed in place polyurethane.

Controller
The easy to use water resistant microprocessor control system is supplied standard. Unit is NAFEM Data Protocol communication (NDP) ready. Optional hardware required to be NDP compliant (3rd party software required for network connection). It includes a 3-Digit LED Display, °F or °C Temperature Scale Display Capability, and an RS485 data port. In addition it includes audio/visual alarms for: Hi/Lo Cabinet Temp, Clean Condenser, Evaporator Coil and Discharge Line Sensor Failures, and Power Supply Interruption.

Refrigeration System
The left side mounted, self-contained, balanced refrigeration system using R-404A refrigerant features an off-cycle defrost, capillary tube, air-cooled hermetic compressor, automatic condensate evaporator, and a dedicated rear-mounted evaporator design which distributes cold air through each drawer section. A 9' cord and retainer is provided. Standard operating temperature is 34 to 38°F.

Drawers
Each heavy-duty drawer is designed to accommodate 12" x 20" x 6" deep pans. They are constructed using 14-gauge stainless steel drawer slides and 2" diameter stainless steel rollers. Drawers include both a self-closing and stay-open feature.

Warranties
Both a one year parts and labor warranty and a five year compressor warranty (self-contained models only) are provided standard. An optional 2nd year extended parts and labor warranty is also available. In addition the control is warranted by a two year parts and labor warranty, and the drawers are covered by a three years parts only warranty (excluding gaskets).

VULCAN
a division of ITW Food Equipment Group LLC
P.O. Box 696 ■ Louisville, KY 40201 ■ Toll-free: 1-800-814-2028 ■ Local: 502-778-2791 ■ Quote & Order Fax: 1-800-444-0602

HEAVY DUTY COOKING

HEAVY DUTY GAS RANGE
REFRIGERATED EQUIPMENT STANDS

DIMENSIONAL DATA

MODEL	LENGTH OVERALL IN.	DEPTH CABINET ONLY IN.	DEPTH WITH DRAWER OPEN	DEPTH OVER HANDLE IN.	HEIGHT OVERALL ON 4" CASTERS IN.	MAX TOP LOAD CAPACITY LBS.	PAN CAPACITY 12" x 20" x 6"	PAN ORIENTATION	DRAWERS PER CABINET	GROSS WEIGHT CRATED LBS.
VSC36	36 (91.4 cm)	32 (81.3 cm)	54⅛ (137.5 cm)	34⅛ (86.7 cm)	26 (66.0 cm)	625	2	n/a	2	410 (186 kg)
VSC48	48 (121.9 cm)	32 (81.3 cm)	54⅛ (137.5 cm)	34⅛ (86.7 cm)	26 (66.0 cm)	625	4	Side by Side	2	430 (195 kg)
VSC60	60 (152.5 cm)	32 (81.3 cm)	54⅛ (137.5 cm)	34⅛ (86.7 cm)	26 (66.0 cm)	1200	6	Side by Side	2	475 (216 kg)
VSC72	72 (182.9 cm)	32 (81.3 cm)	54⅛ (137.5 cm)	34⅛ (86.7 cm)	26 (66.0 cm)	1200	8	Front to Back	4	555 (252 kg)
VSC84	84 (213.4 cm)	32 (81.3 cm)	54⅛ (137.5 cm)	34⅛ (86.7 cm)	26 (66.0 cm)	1500	8	Side by Side	4	655 (297 kg)
VSC96	96 (243.8 cm)	32 (81.3 cm)	54⅛ (137.5 cm)	34⅛ (86.7 cm)	26 (66.0 cm)	1500	12	Front to Back	6	760 (345 kg)

	ELECTRICAL DATA			REFRIGERATION DATA	
MODEL	VOLTAGE	FULL LOAD AMPERES	NEMA PLUG TYPE	REFRIGERANT	BTU/HR - HP
VSC36	115/60/1	6.7	5-15P	R-404A	2440 (⅓ HP)
VSC48	115/60/1	6.7	5-15P	R-404A	2440 (⅓ HP)
VSC60	115/60/1	6.7	5-15P	R-404A	2440 (⅓ HP)
VSC72	115/60/1	6.7	5-15P	R-404A	2440 (⅓ HP)
VSC84	115/60/1	6.7	5-15P	R-404A	2440 (⅓ HP)
VSC96	115/60/1	12.0	5-15P	R-404A	4090 (½ HP)

NOTE: When ordering please specify: Voltage, Options and any additional warranties.

NOTE: Figures in parentheses reflect metric equivalents.

a division of ITW Food Equipment Group LLC

P.O. Box 696 ■ Louisville, KY 40201 ■ Toll-free: 1-800-814-2028 ■ Local: 502-778-2791 ■ Quote & Order Fax: 1-800-444-0602

NOTE: In line with its policy to continually improve its products, Vulcan reserves the right to change materials and specifications without notice.

Item # _____ C.S.I. Section 11420

HEAVY DUTY COOKING

HEAVY DUTY GAS RANGE
24" WIDE CHARBROILER GAS RANGE

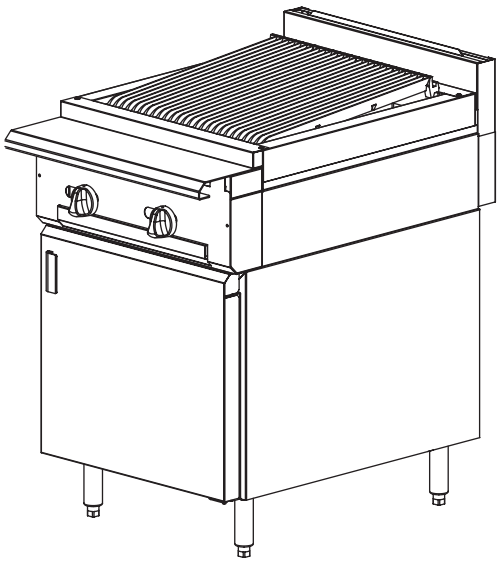

Model VCBB24B
(shown on cabinet base)

☐ **VCBB24** 24" Charbroiler / Modular
☐ **VCBB24B** 24" Charbroiler / Cabinet Base

STANDARD FEATURES

- Stainless steel front, front top ledge, burner box, sides, base, and stub back
- 1¼" diameter front gas manifold with ¾" rear gas connection (capped)
- 65,000 BTU/hr. (4 burners)
- Individual pilots for each burner
- Heavy-duty slant cast grates and char-radiants
- Stainless steel supercharger burner dividers
- 4" stainless steel stub riser
- 6" adjustable stainless steel legs for "B" models (no legs for modular model)
- Stainless steel cabinet base door
- Universal rack guides, with one removable shelf (cabinet base)
- One year limited parts and labor warranty

OPTIONAL FEATURES (Factory Installed)

☐ Cap and cover front manifold
☐ 4" adjustable flanged feet for modular models
☐ Less legs for dolly mounting of cabinet base models
☐ 3" high toe base for curb mounting for "S", "C", & "B" models

ACCESSORIES (Packaged & Sold Separately)

☐ ¾", 1", or 1¼" gas pressure regulator (specify gas type – pack loose)
☐ Set of 4 casters, 6" high (two locking)
☐ 6" adjustable flanged feet for cabinet base models
☐ Extra removable shelves for use with Universal rack guides (cabinet base)
☐ Banking strip
☐ 10", 22", or 34" high back risers (no shelf)
☐ 22" single deck solid or flo-thru high shelf risers
☐ 34" double deck solid or flo-thru high shelf risers
☐ Flexible gas hose with quick disconnect and restraining device
☐ Common condiment type, telescoping plate rail (starting at 24" length)

SPECIFICATIONS

24" wide heavy duty gas range, Vulcan Model No. VCBB24 (modular) or VCBB24B (cabinet base). Stainless steel front, plate ledge, front top ledge with pull-out condiment rails, sides, base, stub back and 6" adjustable legs. 1¼" diameter front gas manifold. Four burners, totaling 65,000 BTU/hr. Cast burners and char-radiants with stainless steel super-charger burner dividers. Individual pilots and controls for each burner. Heavy duty cast slant grates, easy lift-off of 4 each for 24" wide units. Total input 65,000 BTU/hr.

Exterior Dimensions:

36¾"d x 24"w x 36"h on 6" adjustable legs

VULCAN
a division of ITW Food Equipment Group LLC
P.O. Box 696 ■ Louisville, KY 40201 ■ Toll-free: 1-800-814-2028 ■ Local: 502-778-2791 ■ Quote & Order Fax: 1-800-444-0602

HEAVY DUTY COOKING

HEAVY DUTY GAS RANGE
24" WIDE CHARBROILER GAS RANGE

INSTALLATION INSTRUCTIONS

1. A properly sized gas pressure regulator suitable for battery or single unit application must be furnished and installed. Natural gas 6.0" W.C., propane gas 10.0" W.C.
2. An adequate ventilation system is required for commercial cooking equipment. Information may be obtained by writing to the National Fire Protection Association, 1 Batterymarch Park, Quincy, MA 02269, www.NFPA.org. When writing, refer to NFPA No. 96.
3. These units are manufactured for installation in accordance with ANSZ223.1A (latest edition), National Fuel Gas Code. Copies may be obtained from The American Gas Association, 400 N Capitol St. NW, Washington, DC 20001, www.AGA.org.
4. **Clearances**

	Rear	Sides
Combustible	10"	10"
Non-combustible	0"	0"

5. For proper combustion, install equipment on adjustable legs or casters. On curb or platform, allow 3½" front overhang. Toe base with leveling bolts are required for curb installation. Specify when ordering.
6. Cannot be batteried with GH series equipment.
7. This appliance is manufactured for commercial installation only and is not intended for home use.

NOTE: In line with its policy to continually improve its product, Vulcan reserves the right to change materials and specifications without notice.

Specify type of gas when ordering.
Specify altitude when above 2,000 feet.

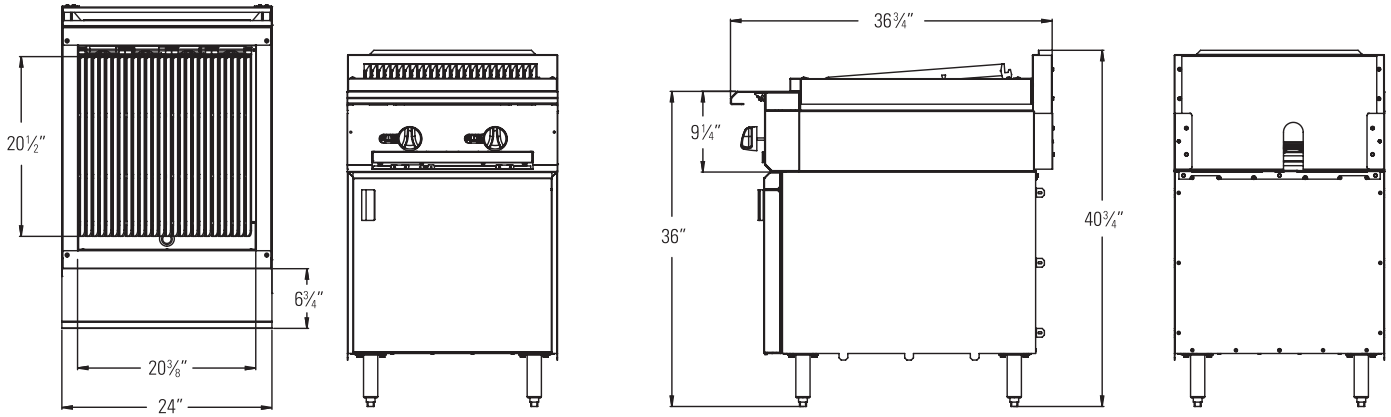

TOP CONFIGURATION	MODEL NUMBER	DESCRIPTION	TOTAL INPUT BTU / HR	SHIPPING WEIGHT LBS / KG
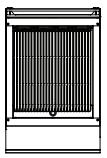	**VCBB24**	24" Charbroiler / Modular	65,000	305 / 139
	VCBB24B	24" Charbroiler / Cabinet Base	65,000	405 / 184

a division of ITW Food Equipment Group LLC
P.O. Box 696 ■ Louisville, KY 40201 ■ Toll-free: 1-800-814-2028 ■ Local: 502-778-2791 ■ Quote & Order Fax: 1-800-444-0602

NOTE: In line with its policy to continually improve its products, Vulcan reserves the right to change materials and specifications without notice.

Datasheet

iCombi® Pro 20-full size E/G



Description

Intelligent, connectable cooking system with the operating modes poultry, meat, fish, egg dishes/desserts, side dishes/vegetables, baked goods and finishing as well as the cooking methods roasting, cooking, baking and grilling.

> Combi steamer as per DIN 18866 (in manual mode).
> For most cooking processes used in commercial kitchens.
> For using steam and convection, individually, one after the other, or combined.

Ventilation approvals: The electrical appliance conforms to the EPA 202 test in accordance with ANSI/NFPA 96 "Ventilation Control and Fire Protection of Commercial Cooking Operations" Refer to UL Listing KNLZ.E148536 (America) or KNLZ7.E148536 (Canada).
The following intelligent assistants are available:

Intelligent assistant

iDensityControl iProductionManager iCookingSuite iCareSystem

iDensityControl
iDensityControl is the iCombi Pro's intelligent climate management. The interaction among intelligent sensors, a high-performance heating system and fresh steam generator, and active dehumidification ensures that the right cooking cabinet climate is always available. Intelligent air circulation ensures the best possible energy input into the food. Consequently, this ensures extraordinary productivity while maintaining high levels of food quality, even cooking and minimum energy consumption.

iCookingSuite
The iCookingSuite is the iCombi Pro's cooking intelligence. The user starts by selecting the right cooking path for the food, choosing from among 6 operating modes and / or 5 cooking methods. Users also specify the desired cooking result. The unit suggests settings for browning and degree of doneness. Intelligent sensors detect the size, quantity and condition of the food. While the cooking path is in progress, the system adjusts key parameters like cooking cabinet temperature, airspeed, and cooking time accurately to the second. The selected desired results are achieved, yielding the best possible quality in the shortest possible time. It is possible to optionally influence the cooking sequence and adapt the cooking result. Users can change to iProductionManager or manual mode at any time. Thanks to iCookingSuite you can simply save time, raw materials, and energy while maintaining a standardized food quality without having to check the procedure.

iProductionManager
iProductionManager intelligently and flexibly organizes the production process. This includes which products can be prepared together on different trays, the ideal sequence of dishes, and monitoring the cooking sequence. iProductionManager supports users with prompts to load or unload dishes. Depending on kitchen processes you can freely position orders (up to two per level) or schedule them on the basis of a certain target time. iProductionManager arranges the sequence of dishes accordingly and automatically specifies the correct settings. Users decide whether dishes are cooked based on optimum energy consumption or a certain target time. Simple monitoring activities are no longer required, saving you working time and energy.

iCareSystem
The iCareSystem is the intelligent iCombi Pro cleaning and descaling system. It recommends the amount of chemicals and ideal cleaning stage from the nine available programs based on usage and any limescale in the steam generator. Ultra-fast interim cleaning cleans iCombi Pro in only 12 minutes, all cleaning programs can also run overnight without the need for supervision. The iCareSystem is particularly efficient and environmentally friendly, consuming small quantities of phosphate-free care products, water, and energy. This means that the iCombi Pro is always hygienically clean without manual work and at minimal costs.

Capacity
> Twenty (20) Full-size sheet pans or Fourty (40) Steam table pans or Twenty (20) 2/1 GN accessories
> Mobile oven rack with 2 1/2" inch rack spacing and tandem casters (63 mm)
> Handle holder for mobile rack
> Large selection of accessories for various cooking procedures, such as grilling, braising or baking
> For use with 2/1, 1/1, 2/4 GN accessories

Combi-steamer mode
> Steaming 86 °F - 266 °F
> Convection 86 °F – 572 °F
> Combination of steam and convection 86 °F – 572 °F

Datenblatt, Version 21 - 11/30/2020 1:20 PM - We reserve the right to make technical changes.

Unit description and functions

Intelligent functions
> Intelligent climate management that measures, adjusts and controls the humidity down to the exact percentage
> The actual measured humidity in the cooking cabinet can be adjusted and viewed
> Dynamic air turbulence in the cooking cabinet thanks to three intelligent, reversible, high-performance fan wheels with five fan wheel speeds, intelligently actuated and manually programmable
> Intelligent cooking path regulation and automatic adjustment of cooking steps in order to achieve the target results, e.g., browning and degree of doneness, safely and efficiently - regardless of product size, load quantity, or who is using the unit
> Monitoring accurate to the second and calculation of browning on the basis of the Maillard reaction to reproduce ideal cooking results
> Adjust intelligent cooking methods or switch between iCookingSuite and iProductionManager for maximum flexibility
> Intelligent cooking step to proof baked goods
> Individual, intuitive programming of up to 1,200 cooking programs with up to 12 steps using drag-and-drop.
> Easy transfer of cooking programs to other cooking systems through secure cloud connection with ConnectedCooking or via USB stick
> iProductionManager, the automated, intelligent planning and controlling tool, organizes multiple cooking processes and mixed loads perfectly. Automatic closing of planning gaps. Automatically optimize schedules and energy consumption in planning and target time preparation to start or end cooking dishes at the same time.
> Automatically resumes and optimally completes cooking processes following power outages lasting less than 15 minutes
> Intelligent cleaning system suggests cleaning programs and the required amount of care products based on the degree of soiling within the cooking system
> Display of the current cleaning and descaling status

Cooking functions
> High-performance steam generator for optimal steaming performance even at low temperatures below 212°F
> Power-steam function: increased steaming power available for Asian applications
> Integrated, maintenance-free grease separation system without an additional grease filter
> Cool-down function to quickly cool down the cooking cabinet; additional fast cooling using internal water nozzle
> Core temperature probe with six measuring points and automatic error correction in the event of incorrect positioning. Optional positioning tool for soft or very small cooking products (accessory)
> Delta-T cooking for extremely gentle preparation with minimal cooking losses
> Precise burst-steam injection; water quantities can be set to 4 different levels within a temperature range of 85°F – 500°F for convection or steam-convection combination modes
> Digital temperature display, can be set to °C or °F, displays target and actual values
> Cooking cabinet humidity and time displayed digitally; displays target and actual values
> Time can be set to display in 12- or 24-hour format
> 24-hour real-time clock with automatic adjustment for daylight savings time when connected to ConnectedCooking
> Automatic pre-selected starting time with variable date and time
> Integrated hand shower with automatic retraction and switchable spray/jet function
> Energy-saving, long-lasting LED lighting in the cooking cabinet, with excellent color fidelity to allow quick determination of cooking progress
> No-charge 4-hour RATIONAL certified chef assistance program

Occupational and operating safety
> Electronic safety temperature limiter for steam generator and convection heating
> Integrated fan wheel brake
> Contact temperature of the cooking cabinet door max. 163 °F
> Use of Active Green cleaning tabs and Care tabs (solid cleaning agent) for ideal occupational safety levels
> HACCP data storage and output via USB or optional storage and management in the cloud-based networking solution ConnectedCooking
> Tested according to national and international standards for unsupervised operation
> Maximum tray height 63 inch when using RATIONAL mobile oven rack with 20 trays, 2 4/8 inch rack spacing (loss of USPHS certification)

Networking
> Integrated, IP-protected Ethernet interface for wired connection to the cloud-based ConnectedCooking networking solution
> Integrated Wi-Fi interface for wireless connection to the cloud-based networking solution ConnectedCooking
> Integrated USB interface for local data exchange
> Cloud-based ConnectedCooking solution allows central unit management; recipe, shopping cart and program management; HACCP data management; maintenance management

Cleaning and care
> Automatic, water pressure-independent cleaning and maintenance system for cooking cabinet and steam generator
> Nine cleaning programs for unsupervised cleaning, also overnight, with automatic cleaning and removal of limescale deposits within the steam generator
> Ultrafast cleaning in only 12 minutes for practically uninterrupted, hygienic production
> Automatic cleaning routine following power outages, ensuring that cooking cabinet remains free of cleaning agents even after the cleaning process has been canceled
> Use of phosphate and phosphorus-free Active-Green cleaning agent tabs and Care tabs
> Triple glass pane cooking cabinet door with rear ventilation, thermally reflecting special coating and swiveling glass panes for easy cleaning
> Inside and outside material: stainless steel DIN 1.4301 / ASTM 304, seamless hygienic cooking cabinet with rounded corners and optimized air flow
> Glass and stainless steel surfaces allow easy, safe external cleaning; IPX5-class protection against spraying water in all directions
> Monitoring option for automatic cleaning using the cloud-based ConnectedCooking networking solution

Datenblatt, Version 21 - 11/30/2020 1:20 PM - We reserve the right to make technical changes.

Operation
> High-resolution 10.1 inch TFT color display and capacitative touchscreen with self-explanatory icons for simple, intuitive operation with gestures like swiping and dragging
> Acoustic prompts and visual messages when user action is required
> Central dial with Push function for intuitive selection and confirmation of entries
> User interface and help function can be set to over 55 languages
> Basic national cuisine preferences can be selected regardless of language settings. Possible to select additional, local cuisine
> Specially adapted cooking parameters for international or country-specific dishes can be selected and started regardless of unit language settings
> Extensive search function including all cooking paths, application examples and settings
> Context-sensitive support that always shows the current help content for the displayed screen content
> Start application examples from help file
> Simple selection of cooking paths using six operating modes and/or five cooking methods
> Cockpit function to display information about the processes within a cooking path
> Customization and control of user profiles to prevent operator errors
> Interactive notifications regarding cooking paths, requested actions, intelligent functions and warnings thanks to Messenger

Installation, maintenance and environment
> Professional installation by RATIONAL-certified technicians recommended
> Fixed waste water connection conforming to SVGW requirements is permitted
> Adaptation to the installation site (height above sea level) through automatic calibration
> Operation without water softener and without additional manual descaling possible
> Flush-mounted installation *
> Service diagnostic system with automatic service message display, self-test function for active testing of unit functions
> Remote diagnosis via ConnectedCooking by certified RATIONAL service partners
> 2-year RATIONAL warranty including parts, labor, and travel and 5-year steam generator warranty**
> Regular maintenance is recommended. Servicing by RATIONAL service partner according to manufacturer recommendations

* See the installation or planner manual for details
** Terms and conditions apply, see manufacturer warranty statement at www.rational-online.com

Options
> MarineLine - marine version
> SecurityLine – prison / security version
> MobilityLine – mobile variant
> HeavyDutyLine – particularly heavy-duty version
> Integrated fat drain
> Protection for control panel
> Safety door lock
> Lockable control panel

Datenblatt, Version 21 - 11/30/2020 1:20 PM - We reserve the right to make technical changes.

Technical specifications

Dimensions and weights

Dimensions (W x H x D)	
Cooking system (body)	42 5/8 x 71 1/8 x 41 3/8 inches
Cooking system (total)	42 3/5 x 73 3/4 x 44 inches
Cooking system with packaging	46 7/8 x 80 3/8 x 48 inches
Maximum working height of top level*	≤ 5 ft. 2 7/8 inches

* when using a RATIONAL mobile rack, Size 20-full size with 20 levels, level spacing 62 mm

Weights	
Maximum load size per level	66 lb
Maximum total load capacity	396 lb
Weight - electric unit without packaging	740 lb
Weight - electric unit with packaging	842 lb
Weight - gas unit without packaging	835 lb
Weight - gas unit with packaging	936 lb

Electrical connection conditions

Voltage 3 AC 208 V /240V	
Connected loads - electric	67.9 kW
Steam power	54 kW
Convection power	66 kW
Breaker	200 A
Connection impedance	0.09 Ω
RCD type	B
Cable diameter	AWG 3/0 194°F
Voltage 3 AC 440 V / 480 V	
Connected loads - electric	67.9 kW
Steam power	54 kW
Convection power	66 kW
Breaker	100 A
Connection impedance	0.09 Ω
RCD type	B
Cable diameter	AWG 2 194°F

Not supplied with cable connection

Connected loads - gas

Natural gas G20	
Nominal heat load, total	303500 BTU
Nominal heat load, Steam mode	193500 BTU
Nominal heat load, Hot Air mode	303500 BTU
Required connection flow pressure	6.5 – 10 inch w.c.
Liquid gas	
Nominal heat load, total	296500 BTU
Nominal heat load, Steam mode	189000 BTU
Nominal heat load, Hot Air mode	296500 BTU
Required connection flow pressure	10 – 15 inch w.c.

1" NPT with 1" gas shut off
Additional gas types and voltages available on request

Connected loads - gas

Voltage 2 AC 208 V	
Connected loads - gas	2.2 kW
Breaker	15 A
RCD Type	B

All gas units are supplied with cord.

Connection conditions water

Water inlet (pressure hose), each	3/4"
Water pressure (flow pressure), each	14.5-87.0 psi
Water drain, each	2" OD
Maximum flow rate per cooking system	3.17 gal/min

Water quality requirements

Untreated water can be 0 to 24.5 gr/gal (0 to 420ppm) hardness. We do not recommend treated water hardness < 5 gr/gal (86ppm) because the water could be corrosive. Sodium ion exchangers are not recommended; H+ Ion exchange systems are recommended. Water that does not meet the following minimum standards will require the proper conditioning

Contaminant	Water Requirements	If > than recommended
Sand / Particles	< 15 µm	Particle filter
Chlorine (Cl2)	< 0.12 gr/gal (0.2 ppm)	Active carbon filter
Chloride (Cl-)	< 4.68 gr/gal (80 ppm)	RO

Connected loads - exhaust air and thermal load

Latent heat load	10331 BTU
Sensible heat emission	13667 BTU
Sound level (electric)	60 dBA
Sound level (gas)	65 dBA

Connection loads - data

LAN data interface	RJ45
WiFi data interface	IEEE 802.11 a/g/n

Minimum distances at installation

Clearance Requirements
To facilitate servicing, we recommend leaving a 20" (500 mm) gap on the left-hand side of the unit. If there is not 20" (500 mm) left side clearance available, provisions for moving the unit to the left for service access must be made. Such provisions include, but are not limited to, having quick connections (water, gas, etc.) and lengthened electrical connections with flexible cords.
If there are no external heat sources acting on the unit, there should be at least 2" (50 mm) of clearance on either side of the unit. The back of the unit can be mounted flush with the wall.
If a high temperature heat source is on the left side of the unit, clearance of at least 14" (350 mm) must be maintained on the left-hand side. This clearance may be reduced to 2" (50 mm) if a heat shield is used (see accessories).
Recommended clearance from unobstructed rear exhaust pipes and any surface collecting grease or flammable material; 16" (400 mm) gas, 10" (254 mm) electric. It is recommended to have a hood overhang of 6" (150 mm) to 18" (450 mm) at the front of the unit and 6" (150 mm) on the sides if installed at the end of the cooking line. Please refer to the Installation Manual for additional technical data and for instructions on installation and setup.

Datenblatt, Version 21 - 11/30/2020 1:20 PM - We reserve the right to make technical changes.

Terms and conditions of installation

> Observe all local and country-specific standards and regulations regarding the installation and operation of industrial cooking appliances. The local standards and regulations for interior ventilation systems must also be taken into account.
> To use ConnectedCooking, an RJ45 network socket or a WLAN connection option (IEEE 802.11 a/g/n) must be in place on-site. For optimal performance, a data rate of at least 100 MB/s is required.

Approvals

Datenblatt, Version 21 – 11/30/2020 1:20 PM - We reserve the right to make technical changes.

Technical drawing, electrical

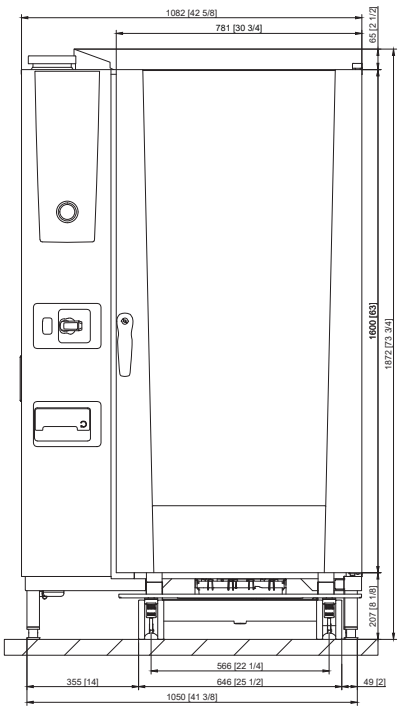

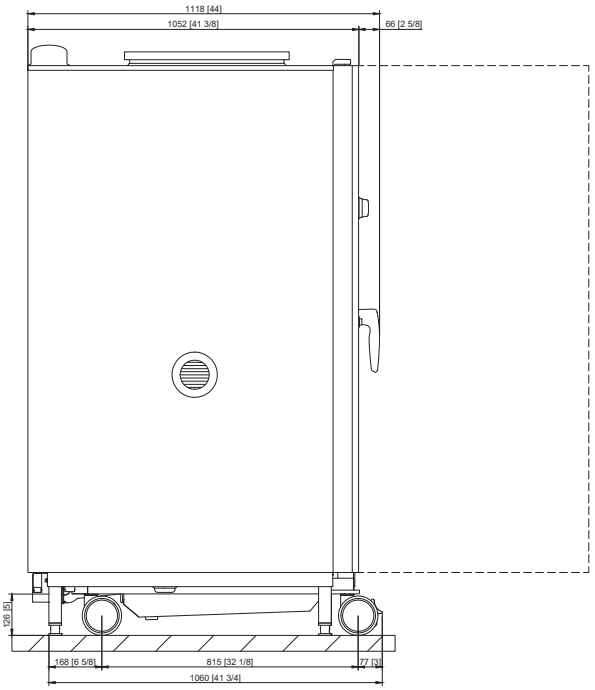

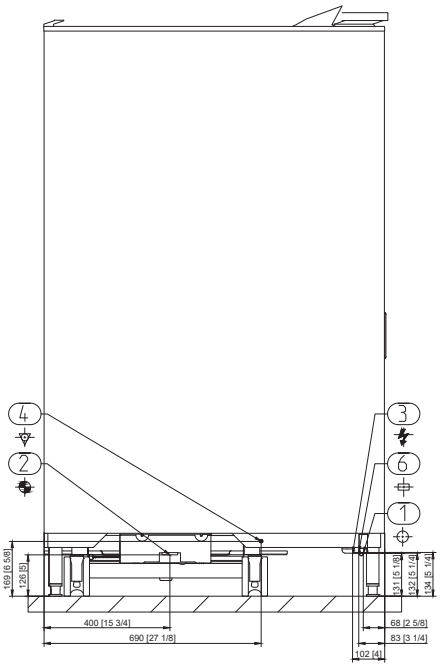

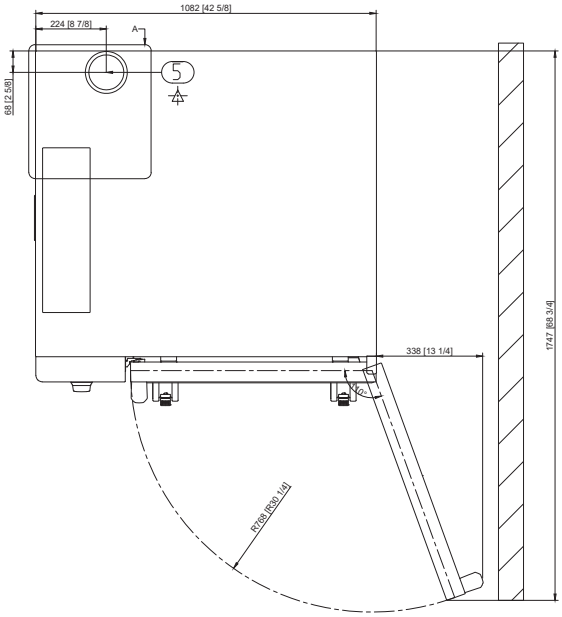

1	Water inlet
2	Water drain
3	Electrical connection
4	Equipotential bonding
5	Ventilation pipe
6	Ethernet interface

Datenblatt, Version 21 - 11/30/2020 1:20 PM - We reserve the right to make technical changes.

Technical drawing, gas

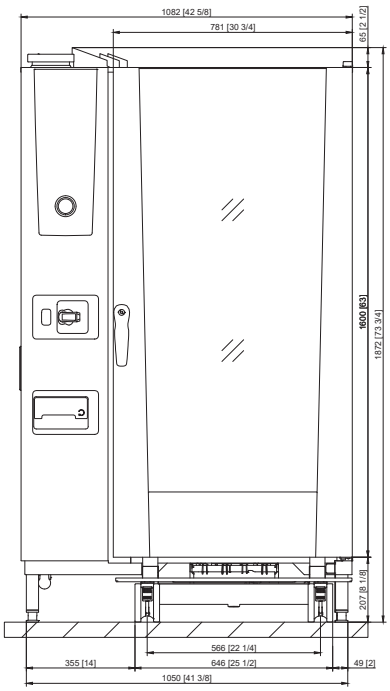

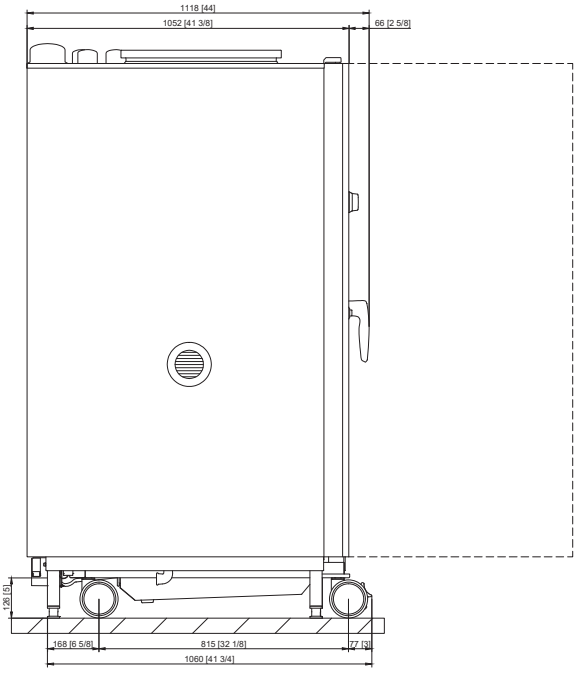

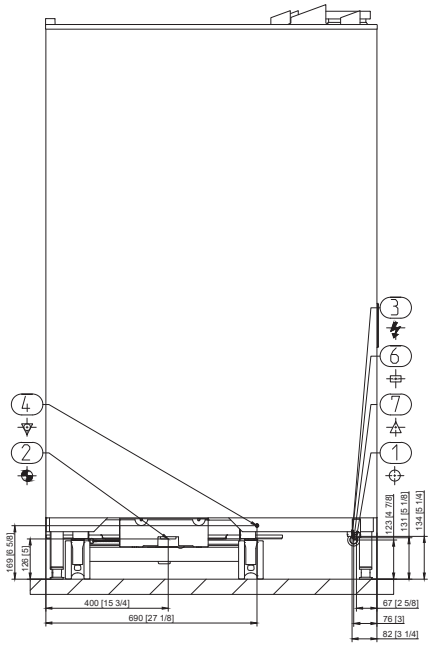

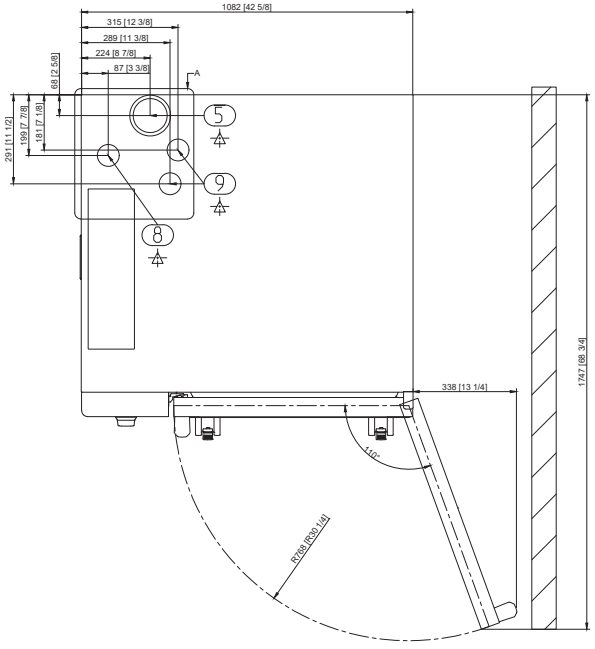

1	Water inlet
2	Water drain
3	Electrical connection
4	Equipotential bonding
5	Ventilation pipe
6	Ethernet interface
7	Gas connection
8	Exhaust pipe gas (steam)
9	Exhaust pipe gas (convection)

Datenblatt, Version 21 - 11/30/2020 1:20 PM - We reserve the right to make technical changes.

Accessories

> 10 full size stainless steel grids included with delivery of the cooking system

Accessories	Item number
RATIONAL Active Green cleaning agent tabs – guarantee the best cleaning performance	Item no. 56.01.535
RATIONAL Care tabs – effectively prevent limescale deposits	Item no. 56.00.562
Condensation breaker – diverts steam and vapors to an existing exhaust air system Sizes 20-half size and 20-full size	Item no. 60.75.326
RATIONAL USB stick – to securely transfer cooking programs and HACCP data	Item no. 42.00.162
Ramp - evens out inclines (up to 3%) allowing mobile rack to be rolled in smoothly Size 20-full size	Item no. 60.22.380
Full size sheet pan adapter	Item no. Top 60.22.392 Item no. Below 60.22.393
Heat shield – for installing a unit near a heat source, e.g. a grill - Size 20-full size	Item no. 60.75.826
Mobile catering stand - especially for heavy mobile catering usage	Item no. 60.22.496
Mobile oven rack and mobile plate oven rack – for simple loading outside the cooking system	See Cooking Systems and Accessories catalog
RATIONAL Double Water Filter - for Combi Duo 6-full size/6-full size and 6-full size/10-full size or if used for more than 2 units	Item no. 1900.1150US

We offer a wide range of cooking accessories to help you achieve ideal cooking results; for more information, please consult our accessories brochure, ask your dealer, or visit www.rational-online.com

Datenblatt, Version 21 - 11/30/2020 1:20 PM - We reserve the right to make technical changes.

Planner	RATIONAL USA Inc.
	1701 Golf Road, Suite C-120, Commercium Rolling Meadows, IL 60008 Toll Free: 888-320-7274 Fax: 847-755-9583 Email: info@rational-online.com Visit us on the internet: www.rational-online.com

Water Filtration Products.

R195-CL



R195-CL

RATIONAL Water Filtration Products Model R195-CL single cartridge water filtration system helps provide consistent high quality water for your RATIONAL combi by reducing the effects of sediment, chloramines, chlorine, taste & odor while providing the required flow rates for any single Combi model or Combi-Duo models 6-half size/6-half size or 6-half size/10-half size or XS/XS.

Product Benefits

- Carbon block technology effectively reduces chloramines, chlorine, taste, and odor for better equipment protection.
- NSF Standard 42 and FDA CFR-21 compliant materials.
- Sanitary Quick Change (SQC) encapsulated cartridge design allows for fast and easy cartridge change-outs with ¼" turn.
- ½" FNPT horizontal inlet and outlet ports allow direct or easily adaptable connections to existing plumbing lines.

Model Number	Article No.	Reduction Claims	Nominal Micron Rating	Capacity	Service Flow Rate	Replacement Cartridge
R195-CL	1900.1154US	Sediment, Chloramines [1], Chlorine, Taste and Odor	5.0 [2]	30,000 gallons (113,550 liters)	2.5 gpm (9.5 lpm)	R95-CL 1900.1155US

1 As tested and certified by independent third party laboratory
2 NSF Certified for Particulate Reduction

Visit www.nsf.org for the claims associated with products that are NSF listed.

Water Filtration Products.

R195-CL

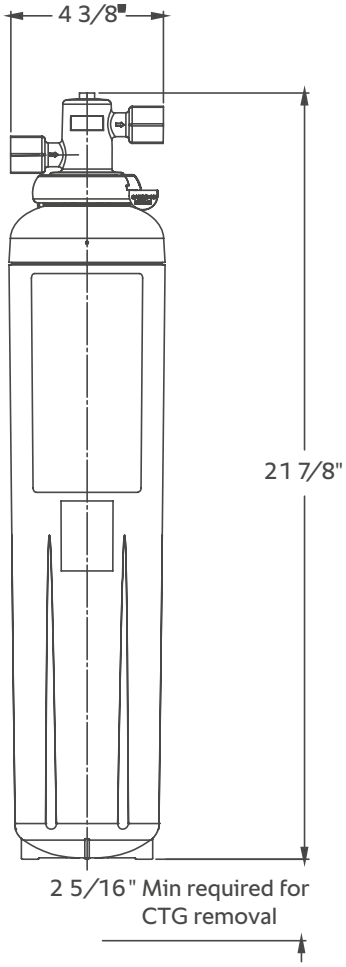

Application Guide

› Any single RATIONAL combi
› XS/XS Combi-Duo
› 6-half size/6-half size Combi-Duo
› 6-half size/10-half size Combi-Duo

Important: Installation Tips

These installation tips are for informational purposes only and are not intended to be used as actual installation instructions. Caution: To reduce the risk associated with property damage due to water leakage:

› Read and follow Use Instructions before installation and use of this system.
› Installation and use must comply with all state and local plumbing codes.
› Protect from freezing, remove filter cartridge when temperatures are expected to drop below 40°F (4.4°C).
› Do not install on hot water supply lines. The maximum operating water temperature of this filter system is 100°F (37.8°C).
› Do not install if water pressure exceeds 125 psi (862 kPa). If your water pressure exceeds 80 psi (552 kPa), you must install a pressure limiting valve. Contact a plumbing professional if you are uncertain how to check your water pressure.
› Do not install where water hammer conditions may occur. If water hammer conditions exist you must install a water hammer arrester. Contact a plumbing professional if you are uncertain how to check for this condition.
> The disposable filter cartridge must be replaced every 12 months, at the rated capacity or sooner if a noticeable reduction in flow rate occurs.

Warning

To reduce the risk associated with the ingestion of contaminants:
Do not use with water that is microbiologically unsafe or of unknown quality without adequate disinfection before or after the system.

RATIONAL recommends regularly scheduled maintenance and replacement of the filter cartridge(s) in order for the product to perform as advertised/sold. RATIONAL shall not be liable for system failures due to improper maintenance.

RATIONAL USA
1701 Golf Road
Suite C-120, Commercium
Rolling Meadows, IL 60008

Tel. 888-320-7274 (Toll Free)
Fax 847-755-9583

info@rational-online.us
rationalusa.com

Limited Warranty
RATIONAL warrants this Product will be free from defects in material and manufacture for five (5) years from the date of purchase: The filter cartridge or filter membrane is warranted to be free from defects in material and manufacture for one (1) year. This warranty does not cover failures resulting from abuse, misuse, alteration or damage not caused by RATIONAL Water Filters or failure to follow installation and use instructions. No warranty is given as to the service life of any filter cartridge or membrane as it will vary with local water conditions and water consumption. RATIONAL MAKES NO OTHER WARRANTIES OR CONDITIONS, EXPRESS OR IMPLIED, INCLUDING, BUT NOT LIMITED TO, ANY IMPLIED WARRANTY OR CONDITION OF MERCHANTABILITY OR FITNESS FOR A PARTICULAR PURPOSE OR ANY IMPLIED WARRANTY OR CONDITION ARISING OUT OF A COURSE OF DEALING, CUSTOMER OR USAGE OF TRADE. If the Product fails to satisfy this Limited Warranty during the warranty period, RATIONAL will replace the Product or refund your Product purchase price. This warranty does not cover labor. The remedy stated in this paragraph is Customer's sole remedy and RATIONAL exclusive obligation. For additional information, see the entire Limited Warranty located in the product Installation and Operating Instruction Manual.
Limitation of Liability. RATIONAL will not be liable for any loss or damage arising from this RATIONAL product, whether direct, indirect, special, incidental, or consequential, regardless of the legal theory asserted, including warranty, contract, negligence or strict liability. Some states and countries do not allow the exclusion or limitation of incidental or consequential damages, so the above limitation or exclusion may not apply to you.

21.055 · V-02 · MDS/Leno · 10/20 · en_US

Installation Information Form.

To ensure maximum customer satisfaction and proper future service support.
Dealer is responsible for completing this form.

Submit this form with every PO.

Project Name (required)

Phone Number Project Location (required)

Street Address (required)

City/State/Zip Code (required)

Location Contact Name (required)

Phone Number Location Contact (required)

Location Contact Email (required)

RATIONAL PO Number

Please select one of the options below.

- ☐ This PO includes a Pre-Installation Site Consultation and/or RATIONAL Certified Installation(RCI). Commissioning is included with RCI. Commissioning that can not be completed at the time of installation can incur additional costs.
- ☐ This PO includes Commissioning. RSP information will be emailed to Signee & Location Contact. They are responsible to contact RSP to schedule the Commissioning visit after the installation is completed. Commissioning that can not be completed due to improper installations can incur additional costs
- ☐ Installation and/or Commissioning will be purchased directly from a RATIONAL Service Partner.
- ☐ Installation and/or Commissioning by a RATIONAL Service Partner is **declined**. An Installation Manual is delivered with every RATIONAL unit. RATIONAL will not warranty service calls related to improper installation. All gas units must be calibrated via a flue gas analysis.

List your preferred RATIONAL Service Provider, or RATIONAL will select an RSP based on location.

☐ New Construction

Approximate Pre-Installation Site Consultation Date (If Purchased):

☐ Replacement

Approximate Installation Date:

Dealer:

Contact at Dealer:

Phone Number:

Email:

Signature:

Date:

The ship date will be the date indicated on the sales confirmation. This date may be subject to change.

1701 Golf Road Suite C-120, Commercium Rolling Meadows, IL 60008
Phone (224) 366-3500 Fax (847) 755-9583

21736 · V-01 · DP/Ad · 08/22 · en_US

RATIONAL Water Filter.

The RATIONAL Water Filtration Systems helps provide consistent high quality water to your RATIONAL SelfCooking Center® or CombiMaster® Plus. The patented carbon block technology reduces the effects of sediment, chloramines, and chlorine while providing the required flow rates.





Item	Necessary if	Article No.	
Single Cartridge* For all models and Combi-Duo model XS/XS, 61/61 and 61/101	Chlorine / Chloramine > 0.2 ppm Particle > 15 microns	1900.1154US	
Double Cartridge* For Combi-Duo model 62/62 and 62/102 or if used for more than 2 units. For each additional unit add 1 head and cartridge.	Chlorine / Chloramine > 0.2 ppm Particle > 15 microns	1900.1150US	
Water Filtration Modular Head For adding on additional Cartridge(s) to Double Cartridge System (Maximum 4 cartridges)	If more than 2 units will be connected in combination with Double Cartridge (1900.1150US)	1900.1152US	
Water Filtration Cartridge Replacement or add on	For replacement or if more than 2 units will be connected in combination with Double Cartridge (1900.1150US)	1900.1155US	
Certified Installation of RATIONAL Water Filter Systems is available when purchased with Certified Installation of RATIONAL unit.		9999.8448	

*Includes Filter System Installation Kit. This ensures that the installer has all of the essential connection materials on hand at the time of the installation. It is a hassle-free one-stop shop.

RATIONAL USA
1701 Golf Road
Suite C-120, Commercium
Rolling Meadows, IL 60008

Tel. 888-320-7274 (Toll Free)
Fax 847-755-9583

info@rational-online.us
rationalusa.com

24/7
Technical Support

Tel. 866-891-3528

ChefLine

Tel. 866-306-2433

V-01 · MDS/para · 06/17 · englisch USA

Water Conditioning.
RATIONAL Specifications.

Water Conditioning Technologies.

Particle Filter.
We recommend a particle filter with fineness of 5–15 µm for filtering water containing sand, iron particles or suspended matter.

Active Carbon Filter.
We recommend an active carbon filter, if the water contains high levels of chlorine (Cl_2) / Chloramine (NH2Cl) over 0.2 ppm (0.2 mg/l). This information can be provided by water supply company.*

Reverse Osmosis
Due to corrosion risks, a reverse osmosis system must be used if and only if chloride (Cl–) concentrations are above 80 ppm (80 mg/l). This information can be provided by water supply company.
Note: Ensure that the minimum conductivity value of 50 µS/cm (Micro Siemens) is being maintained.

Water Softener
Valid for the SelfCookingCenter®: these models will remove scale all by themselves providing that the units are used and cleaned as prescribed. This means a water softener typically is not needed for scale. New line: Valid for CombiMaster® Plus: Recommended for treating water if severe calcification occurs without high chloride contamination.

Recommend System: Weak acid decarbonization (H^+ ion exchange).
Systems not recommended: Sodium Ion Exchangers (salt based water softeners) and Phosphate feeder filters.
New Line: Treater Water Softening must maintain a minimum 5 gr/gal hardness.

Supply Requirements.

Water Filter Connection
½" ID cold water line with a water shut off with ¾" connection. (GHT) new Line Water pressure to filtration system needs a to maintain a minimum 35 psi. (Max 80 psi) new Line RATIONAL units require flow rate of 3 gallons per minute and water pressure of 21–87 psi. (43 psi is recommended)

*All public water systems using surface water and most ground water systems treat water with either chlorine/ chloramine or chlorine dioxide.
Note: EPA will allow levels as high as 4 ppm safe for drinking water, exceeding our maximum level of 2 ppm.

Rational AG

Safety Data Sheet

according to 29 CFR 1910.1200(g)

Oven Delimer Tablets for RATIONAL SelfCookingCenter®, Art. Nr. 56.00.560, 56.00.562

Print date: 03.02.2016 Product code: 00625-0016_US_GHS

1. Identification

Product identifier

Oven Delimer Tablets for RATIONAL SelfCookingCenter®, Art. Nr. 56.00.560, 56.00.562

Recommended use of the chemical and restrictions on use

Use of the substance/mixture

Preservative agent

Details of the supplier of the safety data sheet

Company name:	Rational AG	
Street:	Iglinger Strasse 62	
Place:	D-86899 Landsberg	
Telephone:	+49 (0)8191-3270	Telefax: +49 (0)8191-21735
Responsible Department:	Responsible for the safety data sheet: reinigung@rational-online.de	

Emergency phone number: In North America contact Info Trac at 1-800-535-5053
outside USA/CA contact +49 89 19240

2. Hazard(s) identification

Classification of the chemical

Regulation (EC) No. 1272/2008

Hazard categories:
Skin corrosion/irritation: Skin Irrit. 2
Serious eye damage/eye irritation: Eye Irrit. 2
Hazard Statements:
Causes skin irritation
Causes serious eye irritation

Label elements

Regulation (EC) No. 1272/2008

Signal word: Warning

Pictograms:



Hazard statements

Causes skin irritation
Causes serious eye irritation

Precautionary statements

Keep out of reach of children.
If medical advice is needed, have product container or label at hand.
Wear protective gloves/protective clothing/eye protection/face protection.
If on skin: Wash with plenty of water.
If in eyes: Rinse cautiously with water for several minutes. Remove contact lenses, if present and easy to do. Continue rinsing.
If exposed or concerned: Get medical advice/attention.

Hazards not otherwise classified

Not known.

3. Composition/information on ingredients

Mixtures

Rational AG

Safety Data Sheet

according to 29 CFR 1910.1200(g)

Hazardous components

CAS No	Components	Quantity
77-92-9	Citric acid	> 20 %
617-48-1	Malic acid	> 20 %
124-04-9	Adipic acid	1 - 5 %

4. First-aid measures

Description of first aid measures

General information

If you feel unwell, seek medical advice.

After inhalation

Move to fresh air in case of accidental inhalation of dust or fumes from overheating or combustion.

After contact with skin

In case of contact with skin wash off immediately with soap and water.
Consult a doctor if skin irritation persists.

After contact with eyes

Rinse immediately with plenty of water, also under the eyelids, for at least 15 minutes.
Seek medical treatment by eye specialist.

After ingestion

Rinse out mouth thoroughly with water.
Do not induce vomiting.
Never give anything by mouth to an unconscious person.
Summon a doctor immediately.

Most important symptoms and effects, both acute and delayed

WARNING !
Causes serious eye irritation.
Causes skin irritation.

OSHA Hazard Communication: This material is considered hazardous by the OSHA Hazard Communication Standard 29CFR 1910.1200.

Indication of any immediate medical attention and special treatment needed

Treat symptoms.

5. Fire-fighting measures

Extinguishing media

Suitable extinguishing media

Product does not burn, fire-extinguishing activities according to surrounding.

Unsuitable extinguishing media

Full water jet.

Specific hazards arising from the chemical

Fire may produce:
Irritant/corrosive, flammable as well as toxic distillation gases (carbonization gases).

Special protective equipment and precautions for fire-fighters

Use breathing apparatus with independent air supply.
Protective suit.

Additional information

Cool containers at risk with water spray jet.
Fire residues and contaminated firefighting water must be disposed of in accordance with the local regulations.

Rational AG

Safety Data Sheet

according to 29 CFR 1910.1200(g)

Oven Delimer Tablets for RATIONAL SelfCookingCenter®, Art. Nr. 56.00.560, 56.00.562

6. Accidental release measures

Personal precautions, protective equipment and emergency procedures

No special precautions required.

Environmental precautions

Do not discharge into the drains/surface waters/groundwater.

Methods and material for containment and cleaning up

Pick up mechanically, avoiding dust, and provide disposal in suitable recipients.
Flush rests with sufficient amount of water.

Reference to other sections

Observe protective instructions (see Sections 7 and 8).
Information for disposal look up chapter 13.

7. Handling and storage

Precautions for safe handling

Advice on safe handling

Avoid the formation of dust.
Avoid contact with eyes, skin or mucous membrane.

Advice on protection against fire and explosion

No special protective measures against fire required.

Conditions for safe storage, including any incompatibilities

Requirements for storage rooms and vessels

Keep in the original sealed container.
Keep containers tightly closed in a dry, well-ventilated place.

Further information on storage conditions

Keep away from food, drink and animal feeding stuffs.

8. Exposure controls/personal protection

Control parameters

Exposure controls

Appropriate engineering controls

Provide appropriate exhaust ventilation at machinery and at places where dust can be generated.

Protective and hygiene measures

Avoid contact with eyes and skin.
Wash hands before breaks and at the end of workday.
When using do not eat, drink or smoke.
Remove and wash contaminated clothing before re-use.

Eye/face protection

Tightly fitting goggles.
Eye wash bottle with pure water.

Hand protection

Protective gloves resistant to chemicals made off natural-rubber latex, Minimum coat thickness 0.6 mm, Permeation resistance (wear duration) approx. 480 minutes, i.e. protective glove <Lapren 706> made by www.kcl.de.
This recommendation refers exclusively to the chemical compatibility and the lab test conforming to EN 374 carried out under lab conditions.
Requirements can vary as a function of the use. Therefore it is necessary to adhere additionally to the recommendations given by the manufacturer of protective gloves.

Rational AG

Safety Data Sheet

according to 29 CFR 1910.1200(g)

Respiratory protection

No personal respiratory protective equipment normally required.
Breathing apparatus (particle filter) only if dust is formed.

9. Physical and chemical properties

Information on basic physical and chemical properties

Physical state:	Tablet
Color:	White
Odor:	Characteristic

		Test method
pH-Value:	2,5	(1%)

Changes in the physical state

Flash point:	n.a.
Lower explosion limits:	n.a.
Upper explosion limits:	
Ignition temperature:	n.a.

Oxidizing properties
n.a.

Vapor pressure: (at 20 °C)	n.a.
Water solubility: (at 20 °C)	Soluble
Partition coefficient:	n.d.

Other information

Bulk density: approx. 800 g/L

10. Stability and reactivity

Reactivity

No decomposition if stored and applied as directed.

Chemical stability

Stability: Stable

Stable under normal conditions.

Possibility of hazardous reactions

Hazardous reactions: Will not occur

No hazardous reactions known.

Conditions to avoid

Protect from moisture.

Incompatible materials

No materials to be especially mentioned.

Hazardous decomposition products

No hazardous decomposition products known.

11. Toxicological information

Information on toxicological effects

Rational AG

Safety Data Sheet

according to 29 CFR 1910.1200(g)

Oven Delimer Tablets for RATIONAL SelfCookingCenter®, Art. Nr. 56.00.560, 56.00.562

Route(s) of Entry

Skin and eye contact, inhalation and ingestion.

Acute toxicity

Based on available data, the classification criteria are not met.
Citric acid
LD50/oral/rat: 6730 mg/kg
Adipic acid
LD50/oral/rat: 11000 mg/kg
Malic acid
LD50/oral/rat: >3200 mg/kg

CAS No	Components				
	Exposure routes	Method	Dose	Species	Source
77-92-9	Citric acid				
	oral	LD50	11700 mg/kg	Rat	
	dermal	LD50	> 2000 mg/kg	Rat	

Irritation and corrosivity

Causes skin irritation
Causes serious eye irritation
Skin irritation: Irritant
Eye irritation: Irritant

Sensitizing effects

Based on available data, the classification criteria are not met.
Irritant

Specific target organ toxicity (STOT) - single exposure

Based on available data, the classification criteria are not met.

Severe effects after repeated or prolonged exposure

Based on available data, the classification criteria are not met.
STOT - Single exposure: Not classified.
STOT - Repeated exposure: Not classified.
Aspiration hazard: Not classified.

Carcinogenic/mutagenic/toxic effects for reproduction

Based on available data, the classification criteria are not met.
Carcinogenicity: Not classified.
Mutagenicity: Not classified.
Teratogenicity: Not classified.

Carcinogenicity (NTP): Not listed
Carcinogenicity (IARC): Not listed
Carcinogenicity (OSHA): Not listed

Aspiration hazard

Based on available data, the classification criteria are not met.

Practical experience

Other observations

Ingestion causes irritation of upper respiratory system and gastrointestinal disturbance.
Inhalation of dust may cause shortness of breath, tightness of the chest, a sore throat and cough.

12. Ecological information

Ecotoxicity

Citric acid :
LC50/Leuciscus idus/96 h: 440 - 706 mg/l

Rational AG

Safety Data Sheet

according to 29 CFR 1910.1200(g)

Oven Delimer Tablets for RATIONAL SelfCookingCenter®, Art. Nr. 56.00.560, 56.00.562

EC50/Daphnia magna: 85 mg/l
Adipic acid:
LC50/Pimephales promelas/96 h: 97 mg/l

Persistence and degradability

Product is biodegradable.

Bioaccumulative potential

No data available.

Mobility in soil

The product is soluble in water.

Other adverse effects

No data available.

13. Disposal considerations

Waste treatment methods

Advice on disposal

Remove in accordance with local official regulations.

Contaminated packaging

Empty containers should be taken for local recycling, recovery or waste disposal.
Contaminated packaging should be emptied as far as possible and after appropriate cleansing may be taken for reuse.
Packaging that cannot be cleaned should be disposed of like the product.

14. Transport information

US DOT 49 CFR 172.101

Proper shipping name: Not regulated.

Other applicable information

Non hazardous material as defined by the transport regulations.

15. Regulatory information

U.S. Regulations

National Inventory TSCA

All of the components are listed on the TSCA inventory.

National regulatory information

SARA Section 304 CERCLA:
Adipic acid (124-04-9): Reportable quantity = 5,000 (2270) lbs. (kg)
SARA Section 311/312 Hazards:
Citric acid (77-92-9): Immediate (acute) health hazard
Malic acid (617-48-1): Immediate (acute) health hazard
Adipic acid (124-04-9): Immediate (acute) health hazard

SARA

To the best of our knowledge this product contains no toxic chemicals subject to the supplier notification requirements of Section 313 of the Superfund Amendments and Reauthorization Act (SARA/EPCRA) and the requirements of 40 CFR Part 372.

State Regulations

Safe Drinking Water and Toxic Enforcement Act of 1986 (Proposition 65, State of California)

This product contains no chemicals known to the State of California to cause cancer, birth defects or other reproductive harm.

Rational AG

Safety Data Sheet

according to 29 CFR 1910.1200(g)

Oven Delimer Tablets for RATIONAL SelfCookingCenter®, Art. Nr. 56.00.560, 56.00.562

16. Other information

Hazardous Materials Information Label (HMIS)

Health:	2
Flammability:	0
Physical Hazard:	0

NFPA Hazard Ratings

Health:	2
Flammability:	0
Reactivity:	0
Unique Hazard:	



Changes

Revision date:	03.02.2016
Revision No:	6,1

-

Other data

The information in this document is based on the present state of knowledge and is applicable to the product with regard to appropriate safety precautions.
The information describes exclusively the safety requirements for the product (s) and is based on the present level of our knowledge.
The delivery specifications are contained in the corresponding product sheet.
This data does not constitute a guarantee for the characteristics of the product(s) as defined by the legal warranty regulations.
(n.a. = not applicable; n.d. = not determined)

(The data for the hazardous ingredients were taken respectively from the last version of the sub-contractor's safety data sheet.)

John BOOS Since 1887

ITEM #: _____ QTY: _____

MODEL #: _____

PROJECT NAME: _____

030122

3601 S. Banker St. Effingham, IL 62401 • P.O. BOX 609 • Ph: (888) 431-2667 • Fax: (800) 433-2667

"PBHS-ADA" PRO-BOWL HAND SINKS

FEATURES:

- ONE PIECE DEEP DRAWN BOWL
- ALL SINK BOWLS HAVE LARGE LIBERAL RADII CORNERS
- INCLUDES BASKET DRAIN
- SPLASH MOUNT FAUCET HOLES 4" ON-CENTER
- 1-1/2" DRAIN PLUMBING CONNECTION



PBHS-ADA-P-STD

CONSTRUCTION:

- BOWL: STAINLESS STEEL TOPS ARE TIG WELDED, EXPOSED WELDS ARE POLISHED TO MATCH ADJACENT SURFACE.

MATERIAL:

- BOWL: TYPE 300 STAINLESS STEEL POLISH, SATIN FINISH
- BRACKET: TYPE 300 STAINLESS STEEL POLISH, SATIN FINISH



PBHS-W-1416ADAS



PBHS-ADA-P-STD-SSLR

PRO-BOWL HAND SINKS

MODEL #	QTY
PBHS-ADA-P-STD	
PBHS-ADA-P-STD-SSLR	
PBHS-W-1416ADAS	

-P INCLUDES SPLASH MOUNT GOOSE NECK FAUCET WITH WRIST BLADES

OPTIONAL ACCESSORIES

DESCRIPTION	QTY
FAUCETS	
SIDE SPASH	
ADA WRIST BLADES	
TOWEL DISPENSER	
LEVER WASTES	
OVER FLOWS	
P-TRAPS	

760

DETAILED SPECIFICATIONS

PBHS-ADA-P-STD

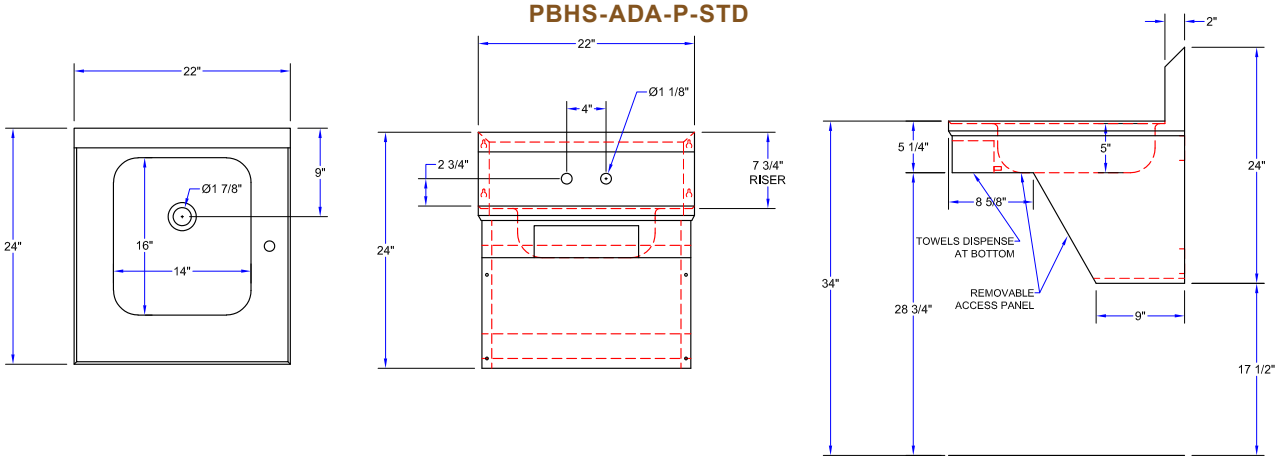

PBHS-ADA-P-STD-SSLR

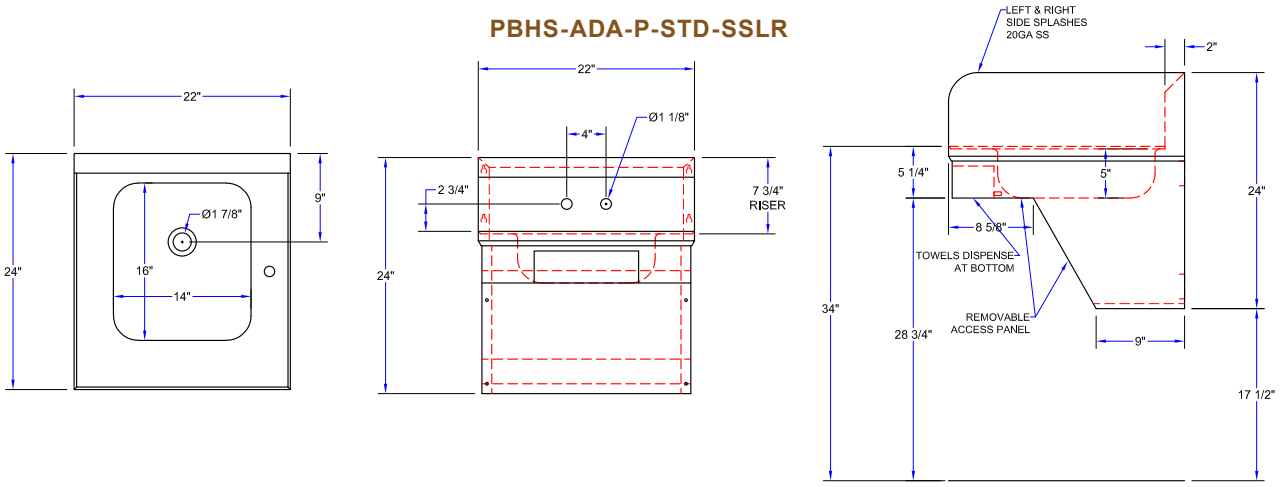

PBHS-W-1416ADAS

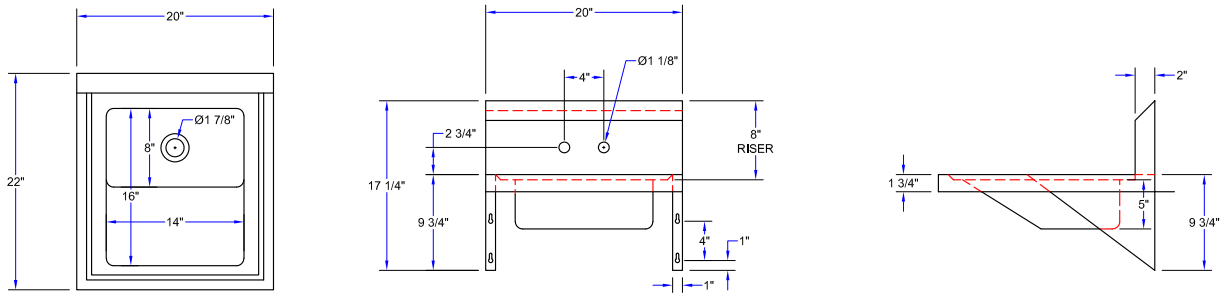

PRO-BOWL HAND SINKS

MODEL #	BOWL SIZE (LxWxD)	DRAIN SIZE	FAUCET LOCATION	SIDE SPLASH
PBHS-ADA-P-STD	14" X 16" X 5"	1-7/8"	SPLASH MOUNT - 4" ON-CENTER (REMOVEABLE FRONT PANEL. GOOSE NECK FAUCET WITH WRIST BLADES, SOAP & PAPER TOWEL DISPENSER INCLUDED)	N/A
PBHS-ADA-P-STD-SSLR	14" X 16" X 5"	1-7/8"	SPLASH MOUNT - 4" ON-CENTER (REMOVEABLE FRONT PANEL. GOOSE NECK FAUCET W/ WRIST BLADES, SOAP & PAPER TOWEL DISPENSER INCLUDED)	LH & RH
PBHS-W-1416ADAS	14" X 16" X 5"	1-7/8"	SPLASH MOUNT - 4" ON-CENTER	N/A

SOME UNITS SHIP UNASSEMBLED FOR REDUCED SHIPPING COST. ALL DIMENSIONS ARE TYPICAL. TOLERANCE +/- .500"

John Boos & Co. is constantly engaged in a program of improving products and therefore reserves the right to change specifications without prior notice.

John BOOS Since 1887

ITEM #: _____ QTY: _____

MODEL #: _____

PROJECT NAME: _____

020121

3601 S. Banker St. Effingham, IL 62401 • P.O. BOX 609 • Ph: (888) 431-2667 • Fax: (800) 433-2667

FAUCETS & PARTS


PBF-FV2-SM-35GLF


PB-KV1-SM-35GLF


PB-KV1-DM-35GLF


PB-KV2-SM-35GLF


PB-KV2-DM-35GLF


PB-WR


PB-LWR-1


PB-PT1.5


PBF-SS-6

FAUCETS & PARTS

	MODEL #	QTY	DESCRIPTION	WT.
FOOT VALVE	PBF-FV2-SM-35GLF		W/ 3-1/2" GOOSENECK SPOUT (LOW LEAD)	3
KNEE VALVE	PBF-KV1-SM-35GLF		SINGLE PEDAL, SPLASH MOUNT, 3.5" GOOSE NECK (LOW LEAD)	3
	PBF-KV1-DM-35GLF		SINGLE PEDAL, DECK MOUNT, 3.5" GOOSE NECK (LOW LEAD)	2.5
	PBF-KV2-SM-35GLF		DOUBLE PEDAL, SPLASH MOUNT, 3.5" GOOSE NECK (LOW LEAD)	2
	PBF-KV2-DM-35GLF		DOUBLE PEDAL, DECK MOUNT, 3.5" GOOSE NECK (LOW LEAD)	4
WRIST BLADES	PB-WR		ADA, STAINLESS STEEL, (1 PAIR), USE W/ HEAVY DUTY FAUCETS ONLY	1
TWIST ACTION LEVER DRAINS	PB-LWR-1		FITS 3-1/2" DRAIN OPENING, 2" OUTLET	4
	PB-LWR-1OV		FITS 3-1/2" DRAIN OPENING, 2" OUTLET, W/ OVERFLOW	4
STRAIGHT ACTION LEVER DRAINS	PB-LWS-1		FITS 3-1/2" DRAIN OPENING, 2" OUTLET	4
	PB-LWS-1OV		W/ OVERFLOW, FITS 3-1/2" DRAIN OPENING	4
P-TRAPS	PB-PT1.5		FOR HAND SINKS, P-TRAP 1-1/2" & TAIL PIPE	7
MOP SINK FAUCET	PBF-SS-6		VACUUM BREAKER NOZZLE W/ 3-4" GARDEN HOSE THREAD, PAIL HOOK, TOP SUPPORT ARM, 1/2" NPT FEMALE FLANGED, W/ ADJUSTABLE INLET W/ SCREWDRIVER STOP	5
MOUNTING KIT	PB-DMMK		FOR DECK MOUNT, INCLUDES (2) 1/2" SUPPLY NIPPLES, (2) RETAINER NUTS, (2) LOCK WASHERS & (2) RUBBER WASHERS	1
	PB-SMMK-90		FOR SPLASH MOUNT, INCLUDES (2) 1/2" SUPPLY NIPPLES, (2) RETAINER NUTS, (2) LOCK WASHERS, (2) RUBBER WASHERS & (2) MALE & FEMALE SHORT 90° ELBOWS	1

SOME UNITS SHIP UNASSEMBLED FOR REDUCED SHIPPING COST. ALL DIMENSIONS ARE TYPICAL. TOLERANCE +/- .500"

John Boos & Co. is constantly engaged in a program of improving products and therefore reserves the right to change specifications without prior notice.

John BOOS Since 1887

ITEM #: _____ QTY: _____

MODEL #: _____

PROJECT NAME: _____

020121

3601 S. Banker St. Effingham, IL 62401 • P.O. BOX 609 • Ph: (888) 431-2667 • Fax: (800) 433-2667

FAUCETS & PARTS


PBF-FV2-SM-35GLF


PB-KV1-SM-35GLF


PB-KV1-DM-35GLF


PB-KV2-SM-35GLF


PB-KV2-DM-35GLF


PB-WR


PB-LWR-1


PB-PT1.5


PBF-SS-6

FAUCETS & PARTS

	MODEL #	QTY	DESCRIPTION	WT.
FOOT VALVE	PBF-FV2-SM-35GLF		W/ 3-1/2" GOOSENECK SPOUT (LOW LEAD)	3
KNEE VALVE	PBF-KV1-SM-35GLF		SINGLE PEDAL, SPLASH MOUNT, 3.5" GOOSE NECK (LOW LEAD)	3
	PBF-KV1-DM-35GLF		SINGLE PEDAL, DECK MOUNT, 3.5" GOOSE NECK (LOW LEAD)	2.5
	PBF-KV2-SM-35GLF		DOUBLE PEDAL, SPLASH MOUNT, 3.5" GOOSE NECK (LOW LEAD)	2
	PBF-KV2-DM-35GLF		DOUBLE PEDAL, DECK MOUNT, 3.5" GOOSE NECK (LOW LEAD)	4
WRIST BLADES	PB-WR		ADA, STAINLESS STEEL, (1 PAIR), USE W/ HEAVY DUTY FAUCETS ONLY	1
TWIST ACTION LEVER DRAINS	PB-LWR-1		FITS 3-1/2" DRAIN OPENING, 2" OUTLET	4
	PB-LWR-1OV		FITS 3-1/2" DRAIN OPENING, 2" OUTLET, W/ OVERFLOW	4
STRAIGHT ACTION LEVER DRAINS	PB-LWS-1		FITS 3-1/2" DRAIN OPENING, 2" OUTLET	4
	PB-LWS-1OV		W/ OVERFLOW, FITS 3-1/2" DRAIN OPENING	4
P-TRAPS	PB-PT1.5		FOR HAND SINKS, P-TRAP 1-1/2" & TAIL PIPE	7
MOP SINK FAUCET	PBF-SS-6		VACUUM BREAKER NOZZLE W/ 3-4" GARDEN HOSE THREAD, PAIL HOOK, TOP SUPPORT ARM, 1/2" NPT FEMALE FLANGED, W/ ADJUSTABLE INLET W/ SCREWDRIVER STOP	5
MOUNTING KIT	PB-DMMK		FOR DECK MOUNT, INCLUDES (2) 1/2" SUPPLY NIPPLES, (2) RETAINER NUTS, (2) LOCK WASHERS & (2) RUBBER WASHERS	1
	PB-SMMK-90		FOR SPLASH MOUNT, INCLUDES (2) 1/2" SUPPLY NIPPLES, (2) RETAINER NUTS, (2) LOCK WASHERS, (2) RUBBER WASHERS & (2) MALE & FEMALE SHORT 90° ELBOWS	1

SOME UNITS SHIP UNASSEMBLED FOR REDUCED SHIPPING COST. ALL DIMENSIONS ARE TYPICAL. TOLERANCE +/- .500"

John Boos & Co. is constantly engaged in a program of improving products and therefore reserves the right to change specifications without prior notice.

T&S BRASS AND BRONZE WORKS, INC.
2 Saddleback Cove / P.O. Box 1088
Travelers Rest, SC 29690

Travelers Rest, SC: 800-476-4103 • Simi Valley, CA: 800-423-0150 • Fax: 864-834-3518 • www.tsbrass.com

Model No.
B-3952-01

Item No.

This Space for Architect/Engineer Approval

Job Name_____Date_____

Model Specified_____ Quantity_____

Customer/Wholesaler_____

Contractor_____

Architect/Engineer_____

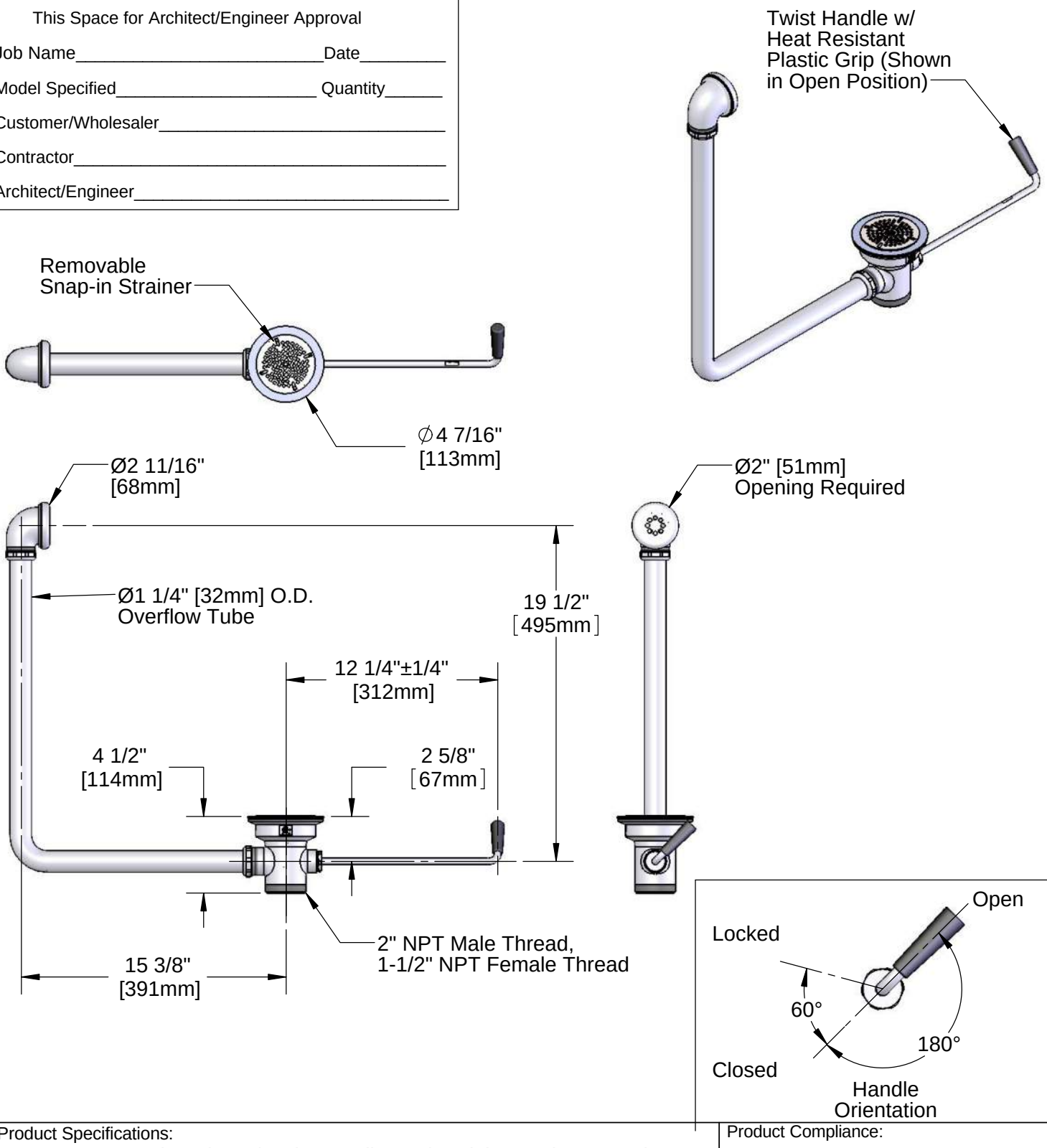

Product Specifications:
Rotary Waste Drain Valve w/ Twist Handle, 3 1/2" Sink Opening, 2" Male NPT / 1-1/2" Female NPT Outlet & Overflow Tube & Head

Product Compliance:
ASME A112.18.2 / CSA B125.2

Drawn:	KJG	Checked:	JRM	Approved:	JHB	Date:	08/28/14	Scale:	1:8	Sheet: 1 of 2

T&S BRASS AND BRONZE WORKS, INC.
2 Saddleback Cove / P.O. Box 1088
Travelers Rest, SC 29690

Travelers Rest, SC: 800-476-4103 • Simi Valley, CA: 800-423-0150 • Fax: 864-834-3518 • www.tsbrass.com

Model No.
B-3952-01

Item No.

ITEM	SALE NO.	DESCRIPTION
1	010389-45	O-Ring, Plunger
2	010390-45	Ferrule, Coupling Nut
3	010391-45	Nut, Coupling for Twist Drain
4	010382-45	Gasket, 3 1/2" Face Flange
5	010384-45	Flange, 3 1/2" Face
6	010386-45	Strainer, 3 1/2" Snap-in Removable
7	010388-45	Plunger, Lever and Twist Drain
8	010393-45	Handle, Rotary Waste Valve Twist
9	011355-45	Tube, Overflow Elbow
10	011356-45	Head, Overflow Tube



Washers, O-Rings & Gaskets are included in Parts Kit B-39K

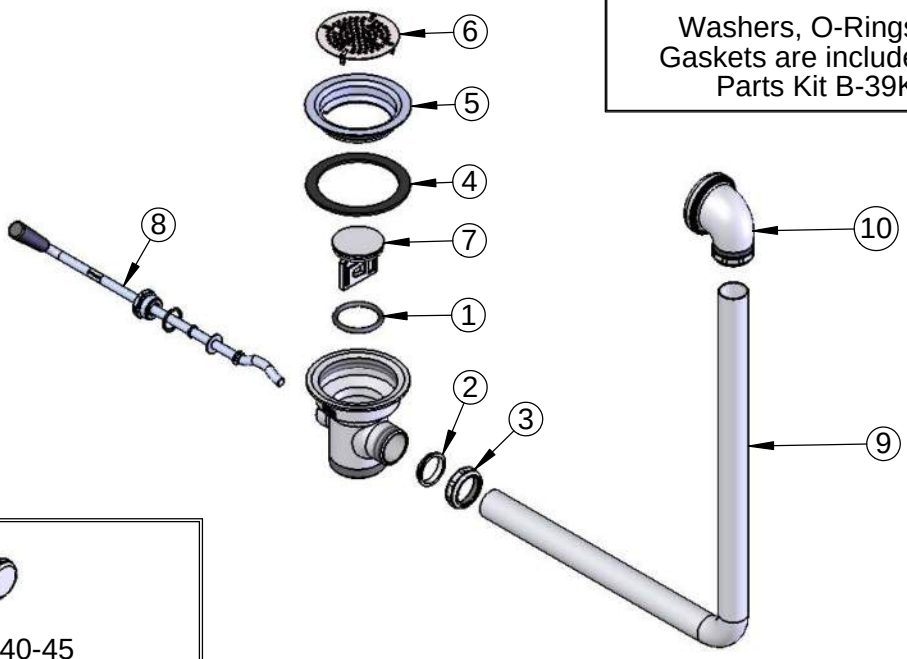



012640-45
Waste Drain Overflow Cap w/ Sealing Washer (Included)

Product Specifications:
Rotary Waste Drain Valve w/ Twist Handle, 3 1/2" Sink Opening, 2" Male NPT / 1-1/2" Female NPT Outlet & Overflow Tube & Head

Product Compliance:
ASME A112.18.2 / CSA B125.2

Drawn:	Checked:	Approved:	Date:	Scale:	Sheet:
KJG	JRM	JHB	08/28/14	NTS	2 of 2

T&S BRASS AND BRONZE WORKS, INC.
2 Saddleback Cove / P.O. Box 1088
Travelers Rest, SC 29690

Travelers Rest, SC: 800-476-4103 • Simi Valley, CA: 800-423-0150 • Fax: 864-834-3518 • www.tsbrass.com

Model No.
B-0231
Item No.

ADA Compliant

This Space for Architect/Engineer Approval

Job Name_____Date_____

Model Specified_____ Quantity_____

Customer/Wholesaler_____

Contractor_____

Architect/Engineer_____

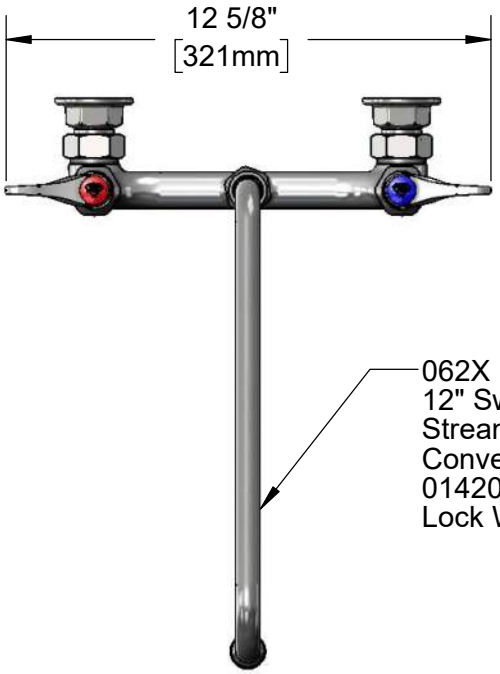



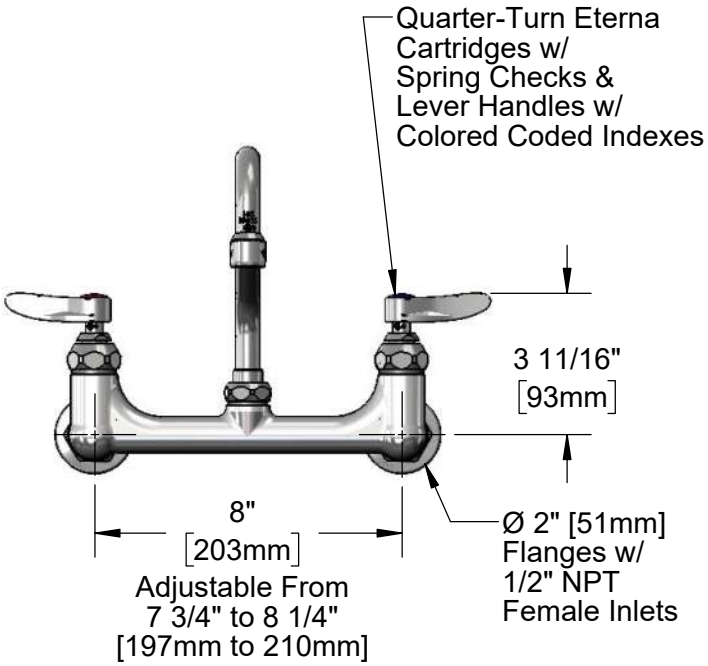

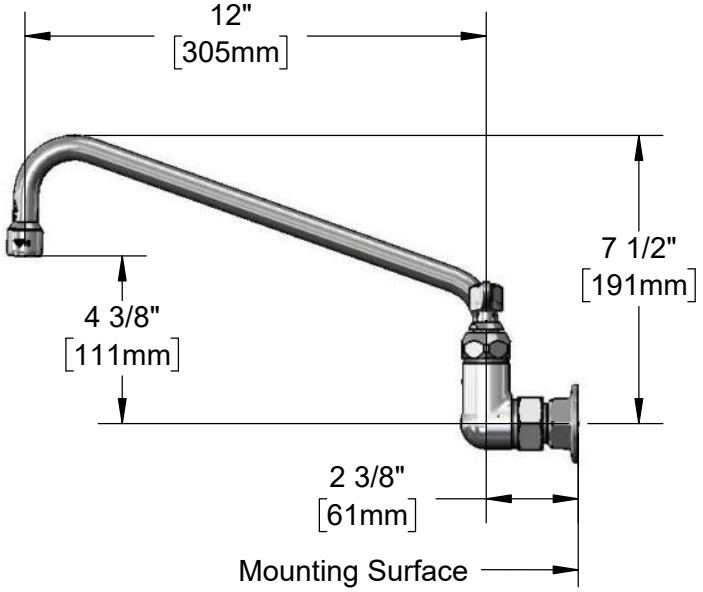

Product Specifications:
8" Wall Mount Mixing Faucet w/ Quarter-Turn Eterna Cartridges w/ Spring Checks, Lever Handles, 12" Swing Nozzle & 1/2" NPT Female Inlets

Product Compliance:
ASME A112.18.1 / CSA B125.1
NSF 61 - Section 9
NSF 372 (Low Lead Content)
ANSI A117.1 (ADA)

Drawn: MRC	Checked: JRM	Approved: JHB	Date: 01/22/18	Scale: 1:5	Sheet: 1 of 2

T&S BRASS AND BRONZE WORKS, INC.
2 Saddleback Cove / P.O. Box 1088
Travelers Rest, SC 29690

Travelers Rest, SC: 800-476-4103 • Simi Valley, CA: 800-423-0150 • Fax: 864-834-3518 • www.tsbrass.com

Model No.
B-0231

Item No.

ITEM NO.	SALES NO.	DESCRIPTION
1	B-PT	Full Flow Stream Regulator, 55/64-27
2	062X	12" Swing Nozzle
3	009538-45	Swivel Washer
4	011429-45	Swivel Sleeves (2)
5	001074-45	O-Ring
6	014200-45	Star Washer, Anti-Rotation
7	002711-40NS	Quarter-Turn Eterna Cartridge w/ Spring Check, Handle, Blue Index & Screw, LTC
8	001019-45	Coupling Nut Washer
9	00AA	1/2" NPT Female Eccentric Flange
10	012442-40NS	Quarter-Turn Eterna Cartridge w/ Spring Check, LTC
11	001638-45NS	Lever Handle (New Style)
12	000925-45	Lab Handle Screw
13	018506-19NS	Blue Button Index, Press-in
14	002712-40NS	Quarter-Turn Eterna Cartridge w/ Spring Check, Handle, Red Index & Screw, RTC
15	012443-40NS	Quarter-Turn Eterna Cartridge w/ Spring Check, RTC
16	001193-19NS	Red Button Index, Press-in

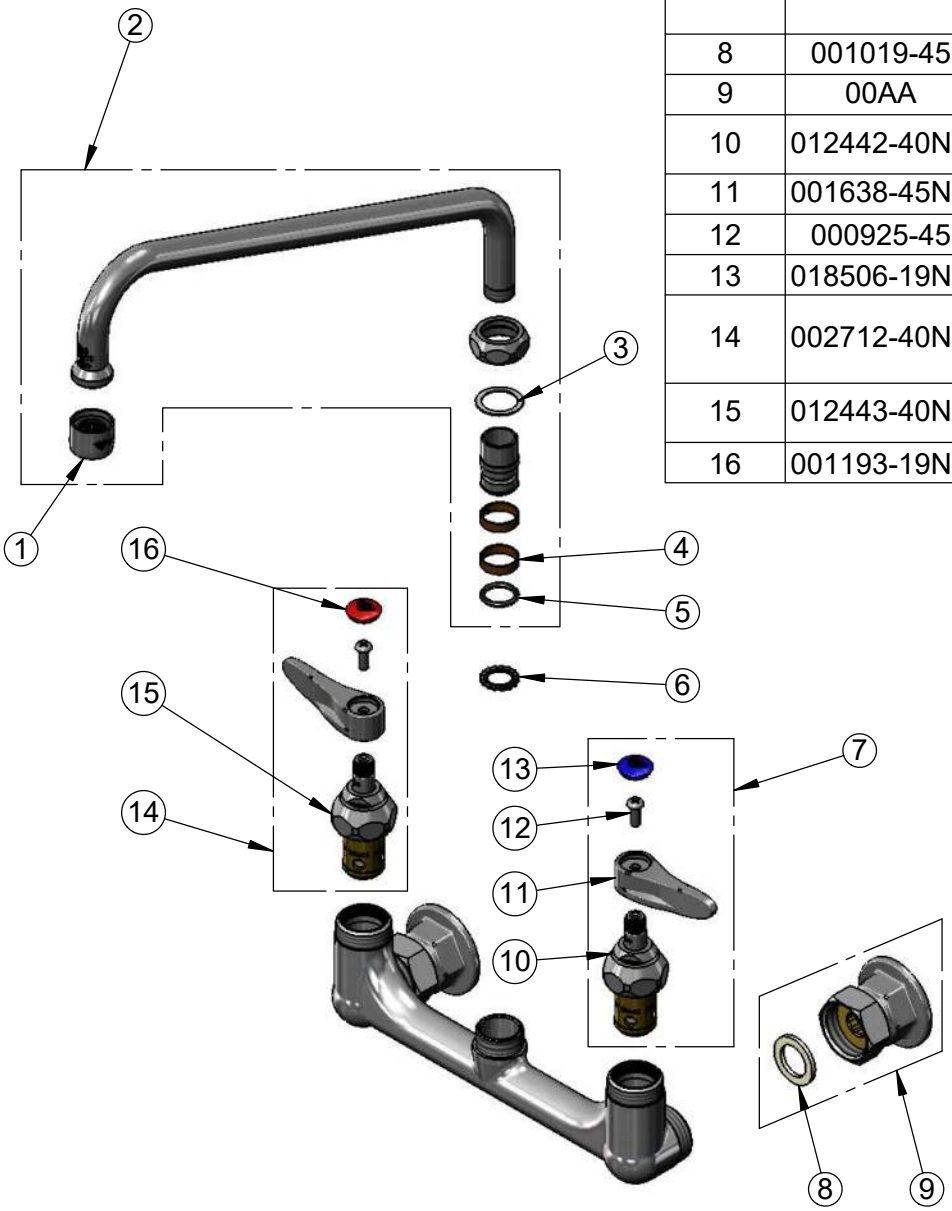

Product Specifications:
8" Wall Mount Mixing Faucet w/ Quarter-Turn Eterna Cartridges w/ Spring Checks, Lever Handles, 12" Swing Nozzle & 1/2" NPT Female Inlets

Product Compliance:
ASME A112.18.1 / CSA B125.1
NSF 61 - Section 9
NSF 372 (Low Lead Content)
ANSI A117.1 (ADA)

Drawn:	Checked:	Approved:	Date:	Scale:	Sheet: 2 of 2
MRC	JRM	JHB	01/22/18	NTS	

T&S BRASS AND BRONZE WORKS, INC.
2 Saddleback Cove / P.O. Box 1088
Travelers Rest, SC 29690

Travelers Rest, SC: 800-476-4103 • Simi Valley, CA: 800-423-0150 • Fax: 864-834-3518 • www.tsbrass.com

Model No.
B-WH4

Item No.

This Space for Architect/Engineer Approval

Job Name_____Date_____

Model Specified_____ Quantity_____

Customer/Wholesaler_____

Contractor_____

Architect/Engineer_____

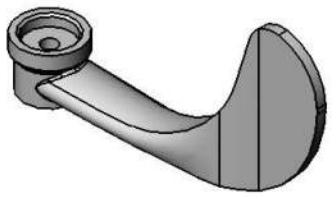

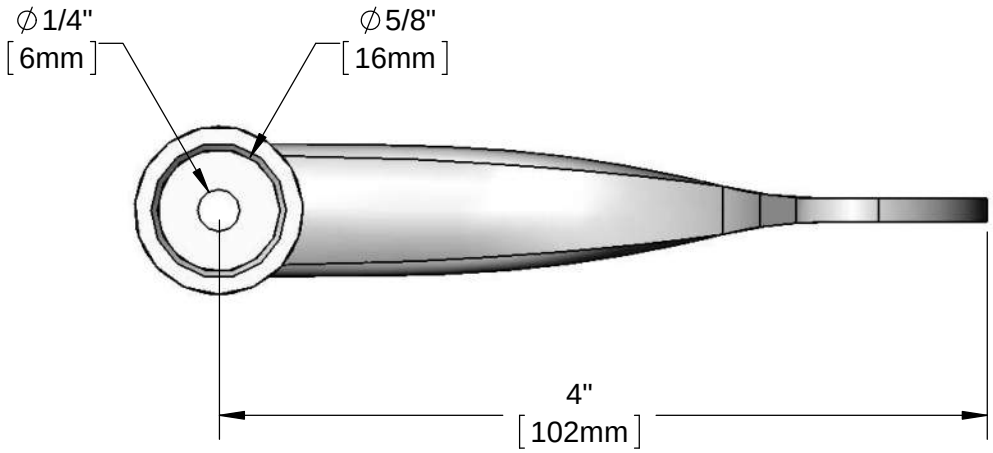

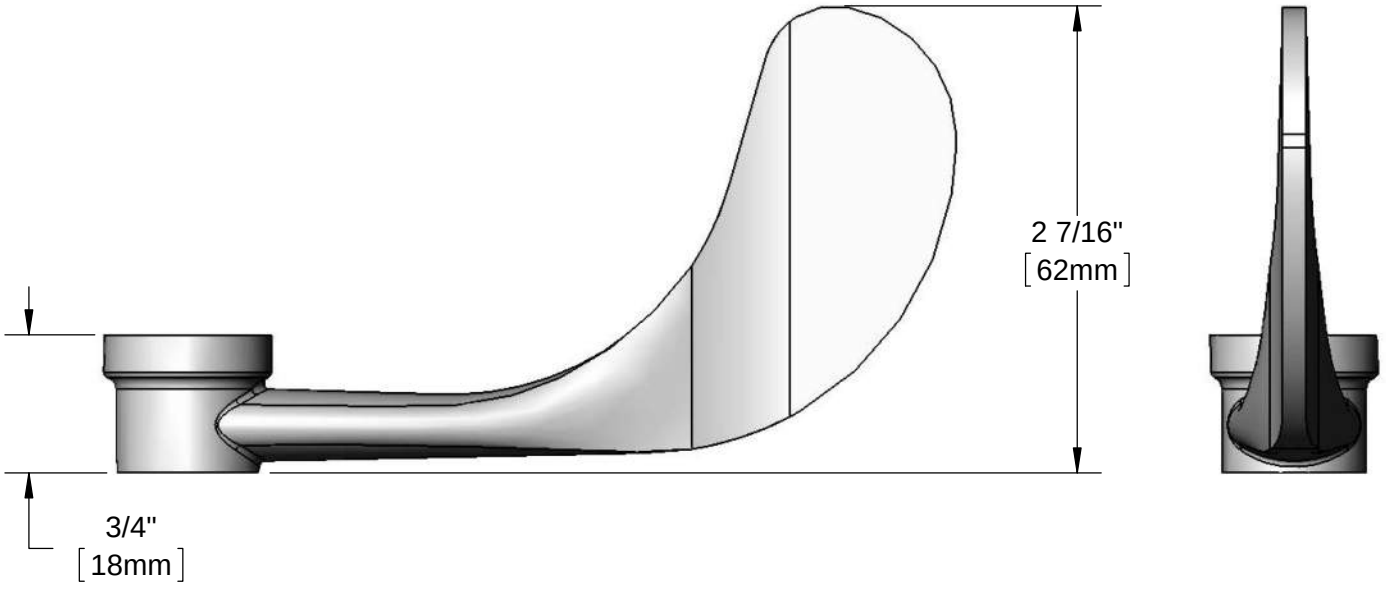

Product Specifications:
4" Wrist Action Handle
(Polish Chrome)

Drawn	Checked	Approved
DHL	DMH	JHB
Scale: 1:1		Date: 08/29/12

Sheet: 1 of 1

T&S BRASS AND BRONZE WORKS, INC.
2 Saddleback Cove / P.O. Box 1088
Travelers Rest, SC 29690

Travelers Rest, SC: 800-476-4103 • Simi Valley, CA: 800-423-0150 • Fax: 864-834-3518 • www.tsbrass.com

Model No.
B-0199-01

Item No.

This Space for Architect/Engineer Approval

Job Name_____Date_____

Model Specified_____ Quantity_____

Customer/Wholesaler_____

Contractor_____

Architect/Engineer_____



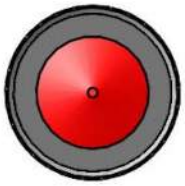

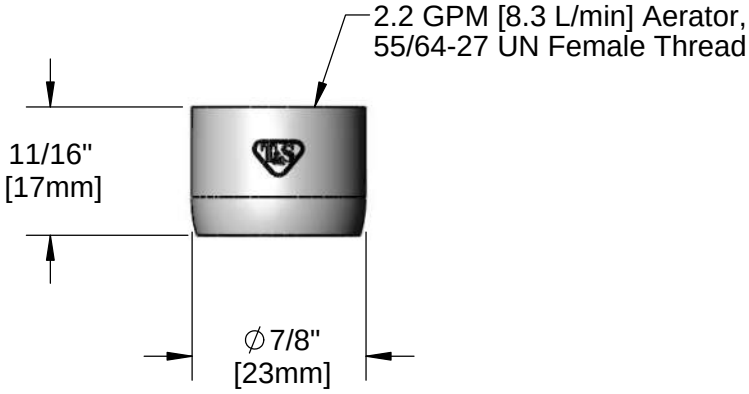

Product Specifications:
Aerator, 2.2 GPM [8.3 L/min] w/ 55/64-27 UN Female Thread

Product Compliance:

ASME A112.18.1 / CSA B125.1
NSF 61 - Section 9
NSF 372 (Low Lead Content)

Drawn: DHL	Checked: JRM	Approved: JHB	Date: 03/26/15	Scale: 1:1	Sheet: 1 of 1

T&S BRASS AND BRONZE WORKS, INC.
2 Saddleback Cove / P.O. Box 1088
Travelers Rest, SC 29690

Travelers Rest, SC: 800-476-4103 • Simi Valley, CA: 800-423-0150 • Fax: 864-834-3518 • www.tsbrass.com

Model No.
B-0230-K

Item No.

This Space for Architect/Engineer Approval

Job Name_____Date_____

Model Specified_____ Quantity_____

Customer/Wholesaler_____

Contractor_____

Architect/Engineer_____

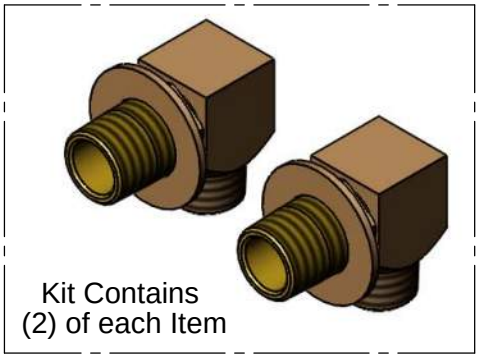

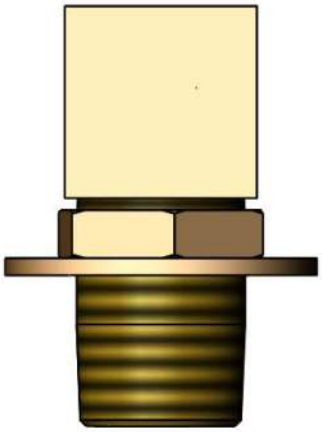

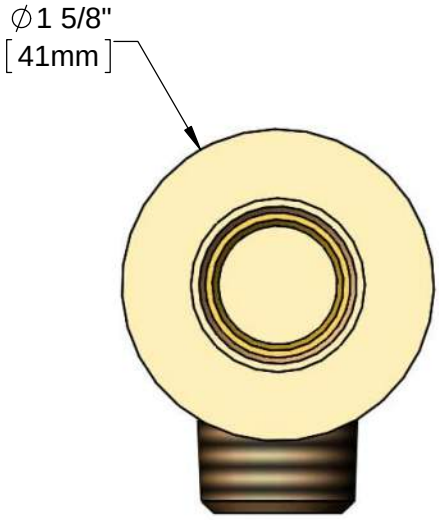

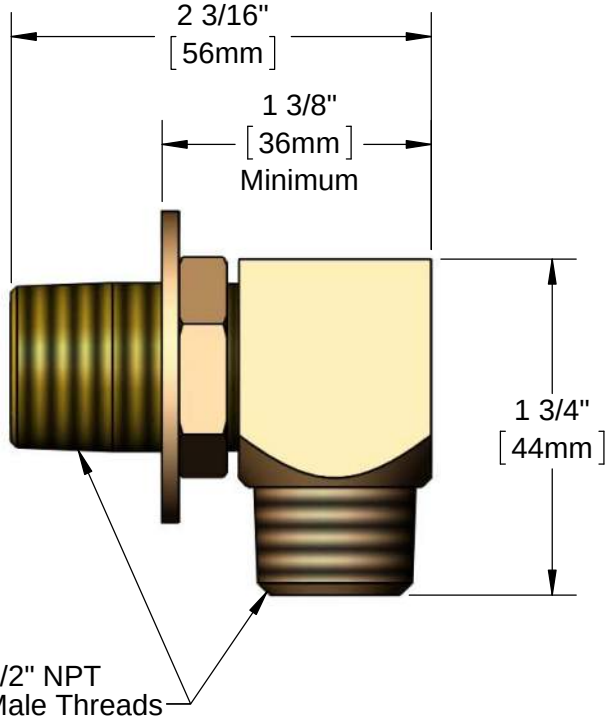

Product Specifications:
1/2" NPT Male Elbow Kit w/ Lock Nut & Washer

Product Compliance:

ASME A112.18.1 / CSA B125.1
NSF 61 - Section 9
NSF 372 (Low Lead Content)

Drawn:	DHL	Checked:	JRM	Approved:	JHB	Date:	03/13/14	Scale:	1:1	Sheet: 1 of 2

T&S BRASS AND BRONZE WORKS, INC.
2 Saddleback Cove / P.O. Box 1088
Travelers Rest, SC 29690

Travelers Rest, SC: 800-476-4103 • Simi Valley, CA: 800-423-0150 • Fax: 864-834-3518 • www.tsbrass.com

Model No.
B-0230-K

Item No.

ITEM NO.	SALES NO.	DESCRIPTION
1	000999-45	Brass Lock Washer
2	002954-45	Shank Lock Nut
3	013357-20	1/2" NPT x 1-5/8" Lg. Close Nipple

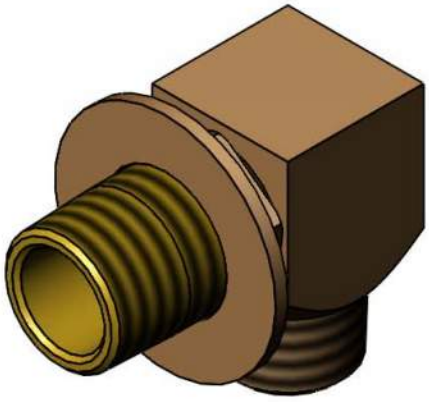

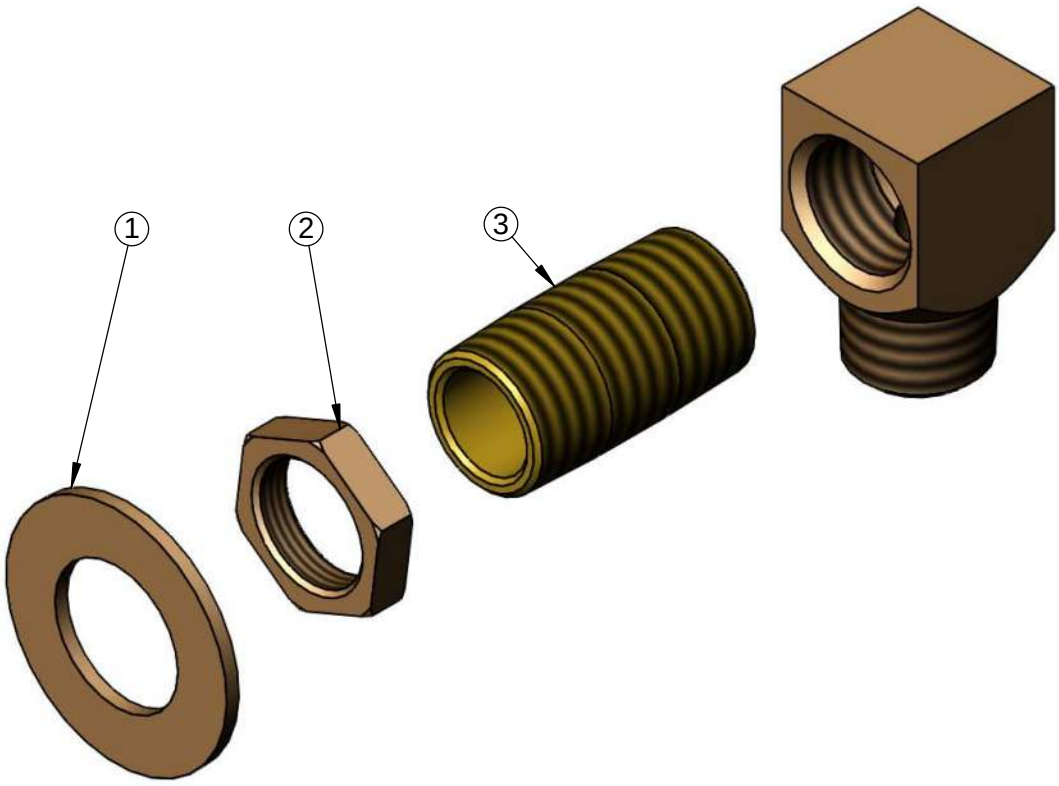

Product Specifications:
1/2" NPT Male Elbow Kit w/ Lock Nut & Washer

Product Compliance:

ASME A112.18.1 / CSA B125.1
NSF 61 - Section 9
NSF 372 (Low Lead Content)

Drawn:	Checked:	Approved:	Date:	Scale:	Sheet:
DHL	JRM	JHB	03/13/14	NTS	2 of 2

BRUTE® CONTAINERS

BRUTE® containers are guaranteed to never fade, warp, crack, or crush, with a proprietary design constructed with the highest quality material.

Features and Benefits:

- Venting channels make removing liners up to 50% easier, improving productivity and reducing the risk of injury
- Commercial-grade construction guaranteed to never fade, warp, crack, or crush
- Bag cinches secure liners, allowing for knot-free liner changes. Tested to 200,000 cycles
- Contoured base handles improve grip and ergonomics, reducing strain and improving efficiency
- Rim with rib-strengthened design increases strength and resists crushing
- Rounded handles make lifting and moving easier
- Reinforced base is specifically engineered to be dragged over rough surfaces in tough environments

2 & 21 Compliant

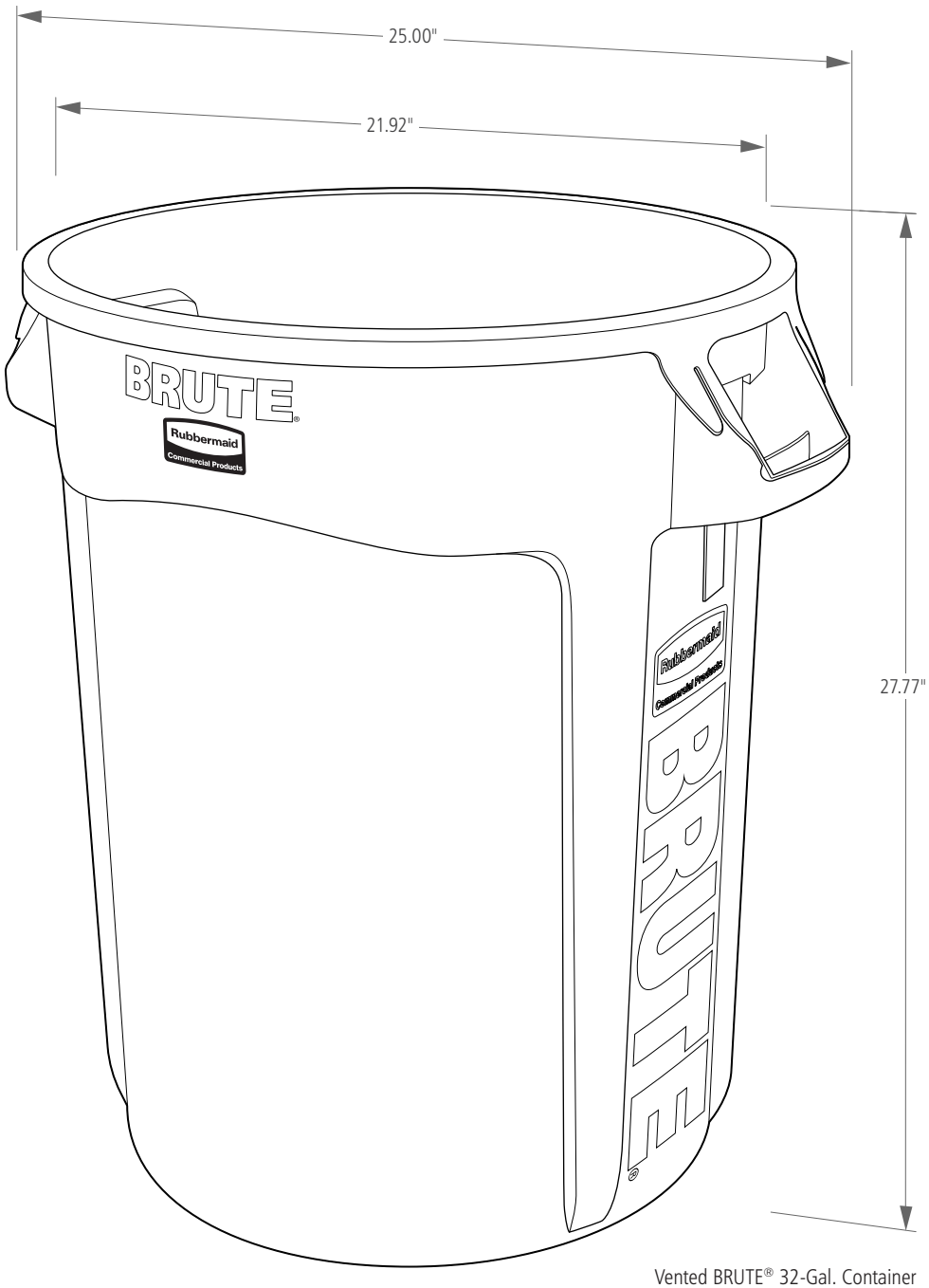

Vented BRUTE® 32-Gal. Container

BRUTE® CONTAINERS

SKU #	DESCRIPTION	COLOR	CAPACITY GAL	HEIGHT IN	DIAMETER IN	DIAMETER WITH HANDLE IN	PACK SIZE
FG261000GRAY	BRUTE® 10 GALLON CONTAINER	GRAY	10G	17.13	15.63	18.00	6
FG261000WHT	BRUTE® 10 GALLON CONTAINER	WHITE	10G	17.13	15.63	18.00	6
FG261000RED	BRUTE® 10 GALLON CONTAINER	RED	10G	17.13	15.63	18.00	6
FG261000YEL	BRUTE® 10 GALLON CONTAINER	YELLOW	10G	17.13	15.63	18.00	6
1779699	BRUTE® 10 GALLON CONTAINER	BLUE	10G	17.13	15.63	18.00	6
FG261000DGRN	BRUTE® 10 GALLON CONTAINER	DARK GREEN	10G	17.13	15.63	18.00	6
1926827	BRUTE® 10 GALLON CONTAINER	BLACK	10G	17.13	15.63	18.00	6
FG262000GRAY	BRUTE® 20 GALLON CONTAINER	GRAY	20G	22.91	19.38	22.50	6
FG262000WHT	BRUTE® 20 GALLON CONTAINER	WHITE	20G	22.91	19.38	22.50	6
FG262000RED	BRUTE® 20 GALLON CONTAINER	RED	20G	22.91	19.38	22.50	6
FG262000YEL	BRUTE® 20 GALLON CONTAINER	YELLOW	20G	22.91	19.38	22.50	6
FG262000BLUE	BRUTE® 20 GALLON CONTAINER	BLUE	20G	22.91	19.38	22.50	6
FG262000DGRN	BRUTE® 20 GALLON CONTAINER	DARK GREEN	20G	22.91	19.38	22.50	6
1779734	BRUTE® 20 GALLON CONTAINER	BLACK	20G	22.91	19.38	22.50	6
FG262073BLUE	BRUTE® 20 GALLON RECYCLING CONTAINER	BLUE	20G	22.91	19.38	22.50	6
1926828	BRUTE® 20 GALLON RECYCLING CONTAINER	DARK GREEN	20G	22.91	19.38	22.50	6
FG263200GRAY	BRUTE® 32 GALLON CONTAINER	GRAY	32G	27.77	21.92	25.00	6
FG263200WHT	BRUTE® 32 GALLON CONTAINER	WHITE	32G	27.77	21.92	25.00	6
FG263200RED	BRUTE® 32 GALLON CONTAINER	RED	32G	27.77	21.92	25.00	6
FG263200YEL	BRUTE® 32 GALLON CONTAINER	YELLOW	32G	27.77	21.92	25.00	6
FG263200BLUE	BRUTE® 32 GALLON CONTAINER	BLUE	32G	27.77	21.92	25.00	6
FG263200DGRN	BRUTE® 32 GALLON CONTAINER	DARK GREEN	32G	27.77	21.92	25.00	6
1867531	BRUTE® 32 GALLON CONTAINER	BLACK	32G	27.77	21.92	25.00	6
FG263273BLUE	BRUTE® 32 GALLON RECYCLING CONTAINER	BLUE	32G	27.77	21.92	25.00	6
1788472	BRUTE® 32 GALLON RECYCLING CONTAINER	DARK GREEN	32G	27.77	21.92	25.00	6
FG264360GRAY	BRUTE® 44 GALLON CONTAINER	GRAY	44G	31.50	24.00	27.75	4
1779740	BRUTE® 44 GALLON CONTAINER	WHITE	44G	31.50	24.00	27.75	4
FG264360RED	BRUTE® 44 GALLON CONTAINER	RED	44G	31.50	24.00	27.75	4
FG264360YEL	BRUTE® 44 GALLON CONTAINER	YELLOW	44G	31.50	24.00	27.75	4
FG264360BLUE	BRUTE® 44 GALLON CONTAINER	BLUE	44G	31.50	24.00	27.75	4
1779741	BRUTE® 44 GALLON CONTAINER	DARK GREEN	44G	31.50	24.00	27.75	4
FG264360BLA	BRUTE® 44 GALLON CONTAINER	BLACK	44G	31.50	24.00	27.75	4
FG264307BLUE	BRUTE® 44 GALLON RECYCLING CONTAINER	BLUE	44G	31.50	24.00	27.75	4
1926829	BRUTE® 44 GALLON RECYCLING CONTAINER	DARK GREEN	44G	31.50	24.00	27.75	4
FG265500GRAY	BRUTE® 55 GALLON CONTAINER	GRAY	55G	33.19	26.38	30.75	3
FG265500WHT	BRUTE® 55 GALLON CONTAINER	WHITE	55G	33.19	26.38	30.75	3
FG265500RED	BRUTE® 55 GALLON CONTAINER	RED	55G	33.19	26.38	30.75	3
FG265500YEL	BRUTE® 55 GALLON CONTAINER	YELLOW	55G	33.19	26.38	30.75	3
1779732	BRUTE® 55 GALLON CONTAINER	BLUE	55G	33.19	26.38	30.75	3
FG265500DGRN	BRUTE® 55 GALLON CONTAINER	DARK GREEN	55G	33.19	26.38	30.75	3
1779739	BRUTE® 55 GALLON CONTAINER	BLACK	55G	33.19	26.38	30.75	3

©2016 Rubbermaid Commercial Products LLC
8900 Northpointe Executive Park Drive, Huntersville, NC 28078

BRUTE® LIDS

BRUTE® lids are constructed with the highest quality material; a UV inhibitor ensures long life in even the most extreme commercial environments. Lids come in a variety of different styles, including self-draining lids, dome top lids, and funnel lids to meet any commercial need.

Features and Benefits:

- Self-draining lids have channels that prevent water from pooling, reducing still water buildup, and include ridges that enable stacking to provide space-efficient storage
- Dome top lids have a spring action door that allows for easy trash disposal while keeping odors and insects out
- Self-draining lids and dome top lids both have a snap-lock feature that ensures a secure fit
- Funnel top lids have a cut-out top that enables hands-free refuse disposal and a funnel design that conceals waste from public view

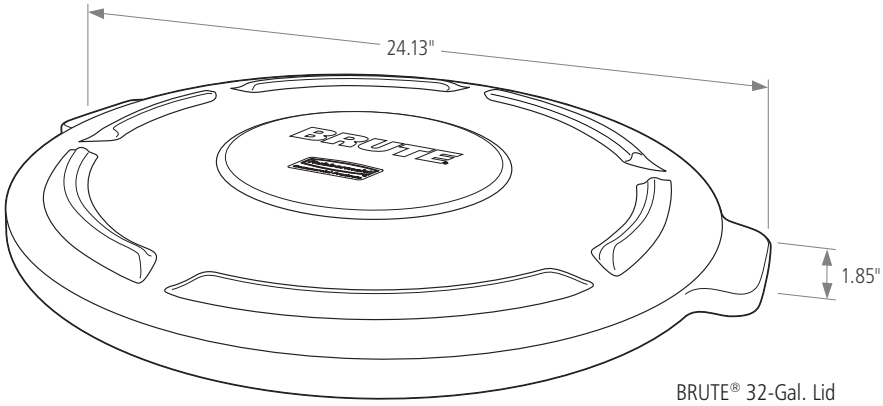

BRUTE® 32-Gal. Lid

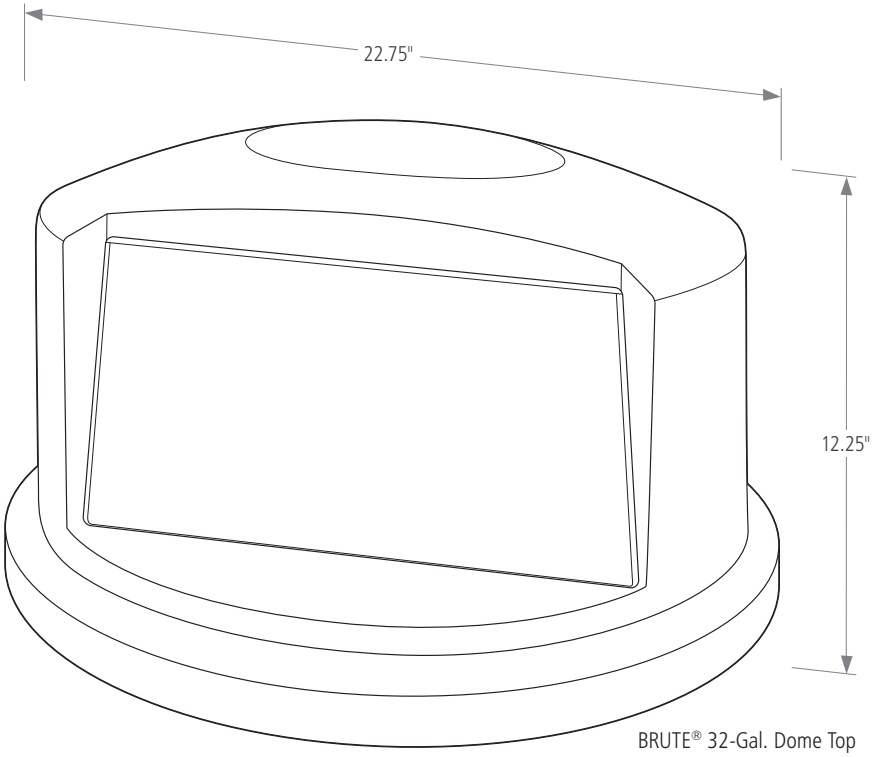

BRUTE® 32-Gal. Dome Top

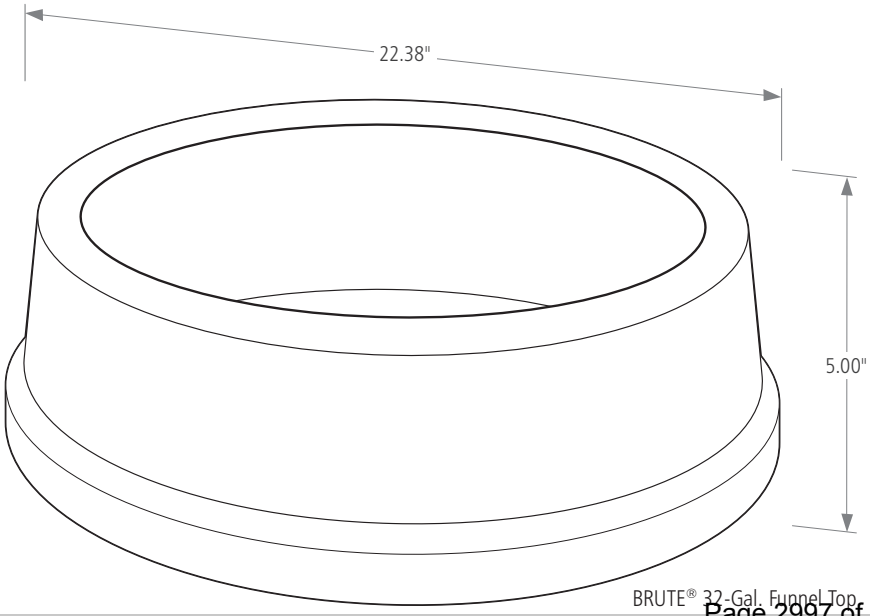

BRUTE® 32-Gal. Funnel Top

BRUTE® LIDS

SKU #	DESCRIPTION	COLOR	FITS	HEIGHT IN	DIAMETER IN	DIAMETER WITH HANDLE IN	PACK SIZE
FG260900GRAY	BRUTE® 10 GALLON LID	GRAY	10G	1.25	15.88	17.13	6
FG260900WHT	BRUTE® 10 GALLON LID	WHITE	10G	1.25	15.88	17.13	6
FG260900RED	BRUTE® 10 GALLON LID	RED	10G	1.25	15.88	17.13	6
FG260900YEL	BRUTE® 10 GALLON LID	YELLOW	10G	1.25	15.88	17.13	6
1779700	BRUTE® 10 GALLON LID	BLUE	10G	1.25	15.88	17.13	6
FG260900DGRN	BRUTE® 10 GALLON LID	DARK GREEN	10G	1.25	15.88	17.13	6
1926826	BRUTE® 10 GALLON LID	BLACK	10G	1.25	15.88	17.13	6
FG261960GRAY	BRUTE® 20 GALLON LID	GRAY	20G	1.80	19.88	21.63	6
FG261960WHT	BRUTE® 20 GALLON LID	WHITE	20G	1.80	19.88	21.63	6
FG261960RED	BRUTE® 20 GALLON LID	RED	20G	1.80	19.88	21.63	6
FG261960YEL	BRUTE® 20 GALLON LID	YELLOW	20G	1.80	19.88	21.63	6
1779731	BRUTE® 20 GALLON LID	BLUE	20G	1.80	19.88	21.63	6
FG261960DGRN	BRUTE® 20 GALLON LID	DARK GREEN	20G	1.80	19.88	21.63	6
FG261960BLA	BRUTE® 20 GALLON LID	BLACK	20G	1.80	19.88	21.63	6
FG263100GRAY	BRUTE® 32 GALLON LID	GRAY	32G	1.85	22.38	24.13	6
FG263100WHT	BRUTE® 32 GALLON LID	WHITE	32G	1.85	22.38	24.13	6
FG263100RED	BRUTE® 32 GALLON LID	RED	32G	1.85	22.38	24.13	6
FG263100YEL	BRUTE® 32 GALLON LID	YELLOW	32G	1.85	22.38	24.13	6
FG263100BLUE	BRUTE® 32 GALLON LID	BLUE	32G	1.85	22.38	24.13	6
FG263100DGRN	BRUTE® 32 GALLON LID	DARK GREEN	32G	1.85	22.38	24.13	6
1867532	BRUTE® 32 GALLON LID	BLACK	32G	1.85	22.38	24.13	6
FG264560GRAY	BRUTE® 44 GALLON LID	GRAY	44G	2.00	24.25	26.75	4
FG264560WHT	BRUTE® 44 GALLON LID	WHITE	44G	2.00	24.25	26.75	4
FG264560RED	BRUTE® 44 GALLON LID	RED	44G	2.00	24.25	26.75	4
FG264560YEL	BRUTE® 44 GALLON LID	YELLOW	44G	2.00	24.25	26.75	4
1779636	BRUTE® 44 GALLON LID	BLUE	44G	2.00	24.25	26.75	4
FG264560DGRN	BRUTE® 44 GALLON LID	DARK GREEN	44G	2.00	24.25	26.75	4
FG264560BLA	BRUTE® 44 GALLON LID	BLACK	44G	2.00	24.25	26.75	4
FG265400GRAY	BRUTE® 55 GALLON LID	GRAY	55G	2.09	26.75	29.13	3
FG265400WHT	BRUTE® 55 GALLON LID	WHITE	55G	2.09	26.75	29.13	3
FG265400RED	BRUTE® 55 GALLON LID	RED	55G	2.09	26.75	29.13	3
FG265400YEL	BRUTE® 55 GALLON LID	YELLOW	55G	2.09	26.75	29.13	3
1779733	BRUTE® 55 GALLON LID	BLUE	55G	2.09	26.75	29.13	3
FG265400DGRN	BRUTE® 55 GALLON LID	DARK GREEN	55G	2.09	26.75	29.13	3
1779738	BRUTE® 55 GALLON LID	BLACK	55G	2.09	26.75	29.13	3
FG263788GRAY	BRUTE® 32 GALLON DOME TOP	GRAY	32G	12.25	22.75	–	1
FG263788RED	BRUTE® 32 GALLON DOME TOP	RED	32G	12.25	22.75	–	1
1829397	BRUTE® 32 GALLON DOME TOP	DARK GREEN	32G	12.25	22.75	–	1
1829398	BRUTE® 32 GALLON DOME TOP	BLUE	32G	12.25	22.75	–	1
1829399	BRUTE® 32 GALLON DOME TOP	YELLOW	32G	12.25	22.75	–	1
FG264788GRAY	BRUTE® 44 GALLON DOME TOP	GRAY	44G	12.63	24.88	–	1
FG264788RED	BRUTE® 44 GALLON DOME TOP	RED	44G	12.63	24.88	–	1
1834838	BRUTE® 44 GALLON DOME TOP	DARK GREEN	44G	12.63	24.88	–	1
1834839	BRUTE® 44 GALLON DOME TOP	YELLOW	44G	12.63	24.88	–	1
1834840	BRUTE® 44 GALLON DOME TOP	BLUE	44G	12.63	24.88	–	1
FG265788GRAY	BRUTE® 55 GALLON DOME TOP	GRAY	55G	14.50	27.25	–	1
FG265788RED	BRUTE® 55 GALLON DOME TOP	RED	55G	14.50	27.25	–	1
FG354300GRAY	BRUTE® 32 GALLON FUNNEL TOP	GRAY	55G	5.00	22.38	–	4

©2016 Rubbermaid Commercial Products LLC
8900 Northpointe Executive Park Drive, Huntersville, NC 28078

Project	Quantity	Item #
Model Specified:		CSI Section 11400

Roll-Thru Hot Food Holding Cabinets To Accommodate 66" High Racks



Model Shown One Section

One, Two & Three Section Models, 32" Deep

R SERIES — Stainless Exterior & Interior

1-Section Roll-Thru Model	RIH132LP-FHS*
2-Section Roll-Thru Model	RIH232LP-FHS*
3-Section Roll-Thru Model	RIH332LP-FHS

A SERIES — Stainless Exterior, Anodized Aluminum Interior

1-Section Roll-Thru Model	AIH132LP-FHS*
2-Section Roll-Thru Model	AIH232LP-FHS*
3-Section Roll-Thru Model	AIH332LP-FHS

In addition to the already outstanding cabinet construction you have come to expect from Traulsen, these dependable roll-thru hot food holding cabinets are built using our high performance ducted fan air distribution system. Unlike designs which simply radiate heat, this minimizes temperature stratification inside the cabinet, while providing for quicker daily start-up, lower energy usage, and reduced lifetime service costs. Each is supplied standard with easy to operate microprocessor controls and stainless steel exteriors.

Standard Product Features

- R-Series: Stainless Steel Exterior & Interior
- A-Series: Stainless Steel Exterior/Anodized Aluminum Interior
- INTELA-TRAUL® Microprocessor Control System
- Ducted Fan Air Distribution System
- Standard Operating Temperature Range 140 to 180°F
- One-Time Start-Up Temperature Adjustment Feature
- ON/OFF Switch Located On Control Face
- Full Length Stainless Steel Doors With Locks
- Self-Closing Doors With Stay Open Feature At 120°
- Guaranteed For Life Cam-Lift Hinges
- Guaranteed For Life Horizontal Work Flow Door Handles
- Standard Door Hinging F & R: 132LP = Right, 232LP = Left/Right, 332LP = Left/Right/Right (other hingings available)
- Automatically Activated Incandescent Lights
- Stainless Steel Breaker Caps
- Accommodates Roll-In Racks Up To 66" High (provided by others)
- Magnetic Snap-In EZ-Clean Door Gasket(s)
- Stainless Steel Door Liner
- Stainless Steel Interior Rack Guides
- Stainless Steel Threshold Ramps
- Stainless Steel One-Piece Louver Assembly - Front & Rear
- 9' Cord & Plug Attached (one section models only)
- Three Year Parts And Labor Warranty

Options & Accessories

- Re-Hinging Feature For Doors
- Wire Shelf Package For Roll-In Models (includes three wire shelves per section)
- Additional Wire Shelves For Above
- Stainless Steel Shelf Package For Roll-In Models (includes three stainless steel shelves per section)
- Additional Stainless Steel Shelves For Above
- Locking Hasps (padlocks supplied by others)
- 115/60/1 Voltage (single section models only)
- Export 220/50/1 Voltage
- Kool Klad Exterior Laminate Decor
- Clear Glass Door(s) In Place Of One Or More Solid Door(s)
- Fluorescent Lights
- Prison/Correctional Facilities Options

ENERGY STAR

* ***Noted models are ENERGY STAR®*** listed. ***Please refer to www.energystar.gov to view the most up-to-date product listing and performance data.***

c UL us LISTED — NSF

Listed by Underwriters Laboratories Inc., to U.S. and Canadian safety standards and Listed by NSF International.

3-YEAR PARTS & LABOR WARRANTY

Approval: _____

Traulsen
TRAULSEN
4401 BLUE MOUND RD. FT. WORTH, TX 76106
PHONE 1 (800) 825-8220 FAX-MKTG. 1 (817) 624-4302
Website: www.traulsen.com

Project	Quantity	Item #
Model Specified:		CSI Section 11400

Specifications

Construction, Hardware and Insulation

Cabinet exterior front, one piece sides, louver assembly and doors are constructed of 20 gauge stainless steel with #4 finish. Cabinet interior and door liners are constructed of stainless steel (anodized aluminum in the A-Series). The exterior cabinet top is constructed of heavy gauge galvanized steel. The interior floor and exterior bottom are constructed of stainless steel and insulated with ¾" of resilient cork. A readily attachable stainless steel ramp is provided.

Doors are equipped with a heavy-duty, extruded wiper gasket for sealing to bottom ramp, removable plug cylinder locks and guaranteed for life cam-lift, gravity action, self-closing metal, glide hinges with stay open feature at 120°. Hinges include a concealed switch to automatically activate the interior incandescent lighting. Guaranteed for life, work flow door handles are mounted horizontally over recess in door which limits protrusion from door face into aisleways. Doors have seamless, polished metal corners.

Gasket profile and Santoprene® material simplify cleaning and increase overall gasket life.

Both the cabinet and doors are insulated with an average of 2" thick high density, non-CFC, foamed in place polyurethane.

DIMENSIONAL DATA	R/AIH132LP	R/AIH232LP	R/AIH332LP
Net capacity cu. ft.	38.8 (1099 cu l)	80.2 (2272 cu l)	117.5 (3329 cu l)
Length - overall in.	35½ (90.2 cm)	68 (172.7 cm)	100½ (255.3 cm)
Depth - overall in.	39⅛ (99.3 cm)	39⅛ (99.3 cm)	39⅛ (99.3 cm)
Depth - over body in.	32 (81.3 cm)	32 (81.3 cm)	32 (81.3 cm)
Depth - door open 90° in.	94½ (240 cm)	94½ (240 cm)	94½ (240 cm)
Clear door width in.[1]	27⅛ (68.8 cm)	27⅛ (68.8 cm)	27⅛ (68.8 cm)
Clear door height in.	66⅝16 (168.4 cm)	66⅝16 (168.4 cm)	66⅝16 (168.4 cm)
Height - overall	83¼ (211.5 cm)	83¼ (211.5 cm)	83¼ (211.5 cm)
RIH Net Wt. lbs.[2]	375 (170 kg)	630 (285 kg)	1075 (488 kg)
AIH Net Wt. lbs.[2]	325 (147 kg)	540 (245 kg)	1000 (454 kg)
Rack Capacity	1	2	3
ELECTRICAL DATA			
Voltage	208/115/60/1	208/115/60/1	208/115/60/1
Feed wires with Ground	4	4	4
Wattage @ 208V	1500	3000	3000
Full load amps @ 208V[3]	7.8	15.5	15.5
Full load amps @ 115V[4]	13.8	n/a	n/a
SHIPPING DATA			
Length - crated in.	41 (104 cm)	73 (160 cm)	106 (269 cm)
Depth - crated in.	44 (112 cm)	44 (112 cm)	44 (112 cm)
Height - crated in.	90½ (230 cm)	90½ (230 cm)	90½ (230 cm)
Volume - crated cu. ft.	95 (2691 cu l)	168 (4759 cu l)	250 (7082 cu l)

NOTES

NOTE: Figures in parentheses reflect metric equivalents.

1= Please note that the available cabinet width narrows for 6" from the top of the door frame to 25-7/8" in order to allow for the heater fans.

2= For shipping weights and dimensions please refer to form TR35875.

3= Heater is capable of operation from 208V to 240V as supplied standard. Actual amp figure will change at any voltage other than 208.

4= Figure shown for optional 115V.



Equipped With One NEMA L14-20P Plug
(1 section models @208V only)



Equipped With One NEMA 5-20P Plug
(1 section models @115V only)

NOTE: When ordering please specify: Voltage, Hinging, Door Size, Options and any additional warranties.

Continued product development may necessitate specification changes without notice.
Part No. TR35794 (REVISED 01-14-19)

Heating System

A low watt density, serpentine style, heater is employed for the generation of electric heat. Low velocity air is forced across its large surface area to efficiently move heat radiating away from these through a down-air distribution duct, where it is then evenly distributed throughout the cabinet, assuring the proper holding environment for hot food product, without drying. A vent, located at the top of the cabinet, is included for positive humidity control.

Controller

Traulsen's Smart Control features advanced control algorithms and sophisticated diagnostic capabilities. Smart sensors will adapt the operation of the system to a variety of environments and usage patterns. The Smart Control offers a complete set of visual alarms designed to alert the user to critical events. In the event of an alarm, a dedicated Alarm LED will illuminate, informing the user of the critical event and describing the event in the large, easy to read full text display.

Interior

Readily removable, interior-mounted, stainless steel guides for rack are provided for protection. Maximum rack size with wheels inboard of frame is 27" wide by 29" deep by 66" high. Racks supplied by others.

Warranties

A three year parts and labor warranty is provided standard.



Elevation - R/AIH132LP

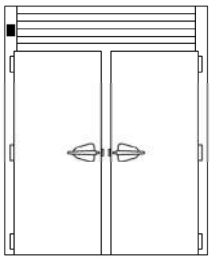

Elevation - R/AIH232LP

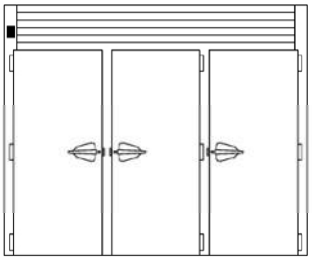

Elevation - R/AIH232LP

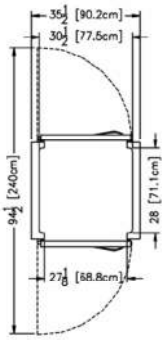

Plan - R/AIH132LP

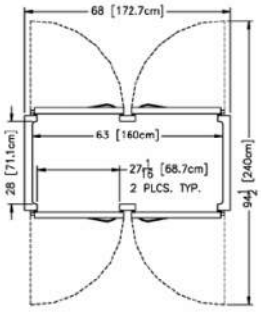

Plan - R/AIH232LP

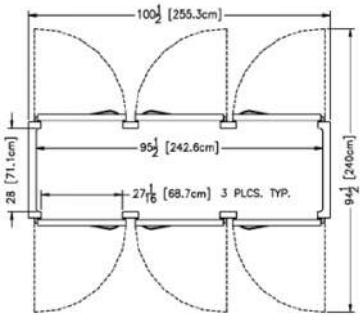

Plan - R/AIH332LP

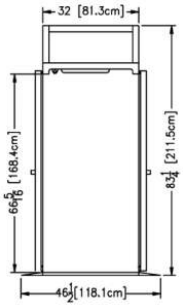

Section - All Models

TRAULSEN
4401 BLUE MOUND RD. FT. WORTH, TX 76106
PHONE 1 (800) 825-8220 FAX-MKTG. 1 (817) 624-4302
Website: www.traulsen.com

FOOD WARMING EQUIPMENT

Specification Page: S10–13

PROJECT:	MODEL:	QUANTITY:	ITEM NO:

ALUMINUM RACKS

Transport 18" x 26" Trays, 12" x 20" Pans, and Oval Trays

"OTR SERIES"

ALUMINUM



OTR-FUA-05-11
Universal Rack



OTR-OT-06-10
Wide 6-3/8" tray ledge supports oval trays



OTR-UA-13
Universal Adjustable Rack

Economical and functional aluminum racks for transport, bussing and storage.

CHOICE OF THE PROFESSIONALS Since 1953 ™

These sturdy aluminum racks provide an economical solution for your transport and storage needs. Fabricated from high tensile extruded aluminum, the "OTR Rack Series" hold up to the demands in hotels, motels, restaurants, hospitals, bakeries . . . *and rugged enough for even correctional facilities.*

They're heavy-duty, yet light weight and easy to maneuver, even when fully loaded with roasting pans, steam table pans, sheet trays, or oval tray sheet pans.

The extruded aluminum runners are double welded for extra strength.

These racks are easy to clean and can be completely sanitized, washed, or steam cleaned while remaining rust resistant.

FWE...the "Choice of the Professionals."

- ◊ **Heavy-duty aluminum**
- ◊ **All welded construction - no rivets**
- ◊ **Welded tubular construction**
- ◊ **5" polyurethane casters**
- ◊ **Tray guides vary in style and type by model (details on other side)**
- ◊ **Two year limited warranty**

NSF

Queen Marys & Utility Carts
Section 10

PROJECT:	MODEL:	QUANTITY:	ITEM NO:

SPECIFICATIONS:

ALUMINUM RACKS
For multi-purpose back-up

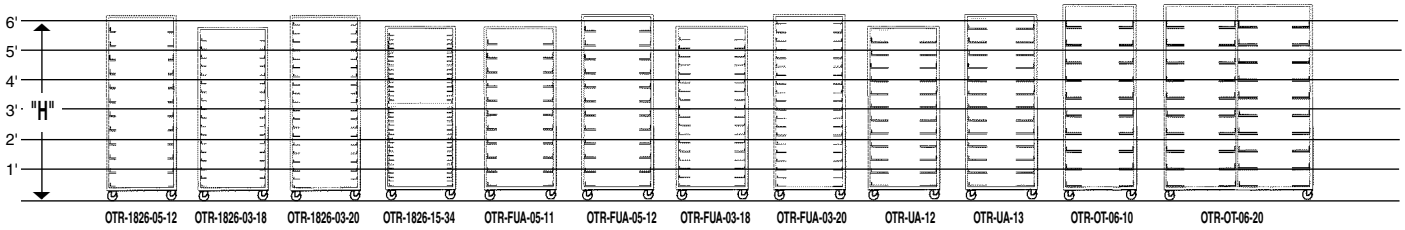

TRAY GUIDE DESCRIPTION



OTR-1826

1.5" (38)

18" x 26" TRAY GUIDE

OTR-FUA

3.125" (79)

UNIVERSAL TRAY GUIDE





OTR-UA

ADJUSTABLE TRAY GUIDE

3.125" (79)

OTR-OT

OVAL TRAY GUIDE

6.75" (171)



Consult Factory for SHIPPING CLASS

MODEL NUMBER	CAPACITIES: NUMBER OF TRAYS / PANS 18" x 26"	12" x 20"	OVAL	LOAD OPENING	SPACINGS (mm)	TRAY GUIDE LEDGE SIZE (mm)	OVERALL EXTERIOR DIMENSIONS IN. (mm): HIGH "H"	DEEP "D"	WIDE "W"	CASTER SIZE	SHIP WT. LBS. (KG)	CUBIC FEET (m3)
18" x 26" Racks - fixed spacings												
OTR-1826-05-12	12	---	---	18.375" (467)	5" (127)	1.875" (48)	69" (1753)	26" (660)	20.5" (521)	5" All Swivel	60 (28)	21.80 (.62)
OTR-1826-03-18	18	---	---	18.375" (467)	3" (76)	1.875" (48)	64" (1626)	26" (660)	20.5" (521)	5" All Swivel	80 (36)	20.54 (.58)
OTR-1826-03-20	20	---	---	18.375" (467)	3" (76)	1.875" (48)	69" (1753)	26" (660)	20.5" (521)	5" All Swivel	85 (40)	21.80 (.62)
OTR-1826-15-34	34	---	---	18.375" (467)	1.5" (38)	1.5" (38)	64" (1626)	26" (660)	20.5" (521)	5" All Swivel	90 (42)	21.33 (.60)
Universal Racks - fixed spacings												
OTR-FUA-05-11	11	11	---	18.375" (467)	5" (127)	3.125" (79)	64" (1626)	26" (660)	20.5" (521)	5" All Swivel	85 (40)	21.33 (.60)
OTR-FUA-05-12	12	12	---	18.375" (467)	5" (127)	3.125" (79)	69" (1753)	26" (660)	20.5" (521)	5" All Swivel	90 (42)	22.64 (.64)
OTR-FUA-03-18	18	18	---	18.375" (467)	3" (76)	3.125" (79)	64" (1626)	26" (660)	20.5" (521)	5" All Swivel	90 (42)	21.33 (.60)
OTR-FUA-03-20	20	20	---	18.375" (467)	3" (76)	3.125" (79)	69" (1753)	26" (660)	20.5" (521)	5" All Swivel	105 (48)	22.64 (.64)
Universal Racks - adjustable on 1.5" spacings												
OTR-UA-12	12	24	12	22.375" (568)	3.125" (79)	5" (127)	64" (1626)	26" (660)	24.5" (622)	5" 2 Swivel	118 (54)	28.31 (.80)
OTR-UA-13	13	26	13	22.375" (568)	3.125" (79)	5" (127)	70" (1778)	26" (660)	24.5" (622)	5" 2 Swivel	125 (57)	30.05 (.85)
Oval Tray Racks - wide angle fixed spacings												
OTR-OT-06-10	10	20	10	22.375" (568)	6" (152)	6.75" (171)	70" (1778)	30" (762)	26" (660)	5" 2 Swivel	70 (32)	28.13 (.80)
OTR-OT-06-20	20	40	20	22.375" (568)	6" (152)	6.75" (171)	70" (1778)	30" (762)	50.75" (1289)	5" 2 Swivel	160 (72)	55.13 (1.56)

CONSTRUCTION. Heavy-duty extruded type 6063 aluminum alloy. All uprights and runners are fully welded.

TRAY GUIDES. Tray guides are welded to the uprights. Spacings and ledge size vary in dimensions for intent of purpose and are indicated on chart above.

CASTERS. 5 inch heavy-duty, easy rolling, polyurethane tire casters with 1.5" wheel.

FWE Products are used by major companies world-wide. We can modify, design, or custom build equipment to fit your special requirements.

Food Warming Equipment Company, Inc.
P.O. Box 1001
Crystal Lake, IL 60039 USA
800-222-4393; 815-459-7500
Fax: 815-459-7989

Manufacturing Facilities:
7900 S. Route 31
Crystal Lake, IL 60014 USA
www.FWE.com sales@fweco.net

FWE products may be covered under one or more of the following U.S. patents: 288,299;238,300;3,952,609;4,192,991.

All specifications subject to change without notice.
© 09D Food Warming Equipment Company, Inc.

Project: _____ Item #: _____

Panasonic

NE-1064F

1000 WATT* COMMERCIAL MICROWAVE OVEN

FOOD SERVICE EQUIPMENT

PRO

www.panasonic.com/CMO



BOTTOM ENERGY FEED

Energy travels less distance to reach the food, compared to side or top energy feed, for increased efficiency.

"GRAB & GO" DOOR HANDLE

Without moving parts like those found in trigger-activated or push-button handles, the "Grab & Go" door handle is fast, reliable and durable.

SPECIFICATIONS	NE-1064F
Power Source:	120V, 60Hz, Single Phase
Receptacle Required:	NEMA 5-15
Frequency:	2,450MHz
Required Power:	13.4A
Output:	1000 Watts*
Outer Dimensions: (w x d x h)	20-1/8" x 16-1/2" x 12"
Cavity Dimensions: (w x d x h)	13" x 13" x 8-1/16"
Net Weight:	34 lbs.
Shipping Weight:	40 lbs.
Shipping Box Size: (w x d x h)	24" x 18-3/4" x 14-3/4" – 3.8 cu. ft.
Timer:	99 Minutes, 99 Seconds
Memory Capability:	20 Programs
Door / Cabinet / Cavity:	All Stainless

The NE-1054F commercial microwave meets or exceeds all safety performance and sanitation standards set for commercial food service microwave ovens by UL, HHS, FCC and NSF.

NEMA 5-15

c UL us LISTED

NSF

Panasonic Commercial Food Service
Division of Panasonic Corporation of North America
2 Riverfront Plaza | Newark, NJ 07102
(201) 348-7000
www.panasonic.com/cmo

PERFECT FOR

- Vending
- Break Rooms
- Waitress Stations
- Front of House
- Schools
- Concessions
- Convenience Stores

PERFORMANCE

- 1000 Watt Power
- 6 Power levels
- 10 Programmable memory pads
- 20 Memory capability
- 2- and 3-stage cooking
- Programmable and Manual operations
- Bottom energy feed

ADDITIONAL FEATURES

- Stainless steel cabinet and cavity
- 0.8 cubic feet cavity
- Braille keypad
- Program list/cycle counter
- Self diagnostics
- 99:99-minute capacity
- Cavity light
- Grab & Go door handle
- Fits 1 half-size, 6-inch deep steam table pan/ cover
- Interior oven light
- See-through oven door
- Touch control keypad
- Anti-theft equipped
- Will ship via UPS
- Program lock
- Tone control
- NSF and UL commercial approved

MAINTENANCE

- Self-diagnostics
- Easy to change interior oven light
- Warranty: 1 year parts/labor or 18,000 cycles
- Warranty: 3 years parts/labor or 54,000 cycles for magnetron

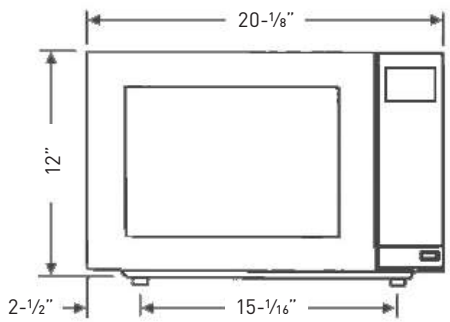

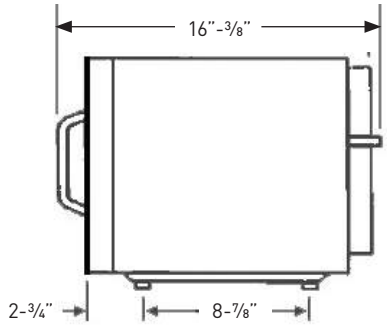

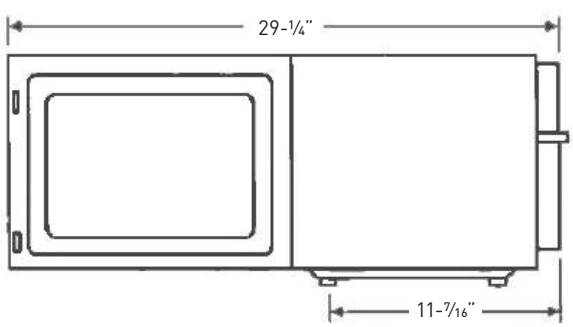

S-11 NSF Manual Can Openers

For the very highest standard in food safety and sanitation, the S-11 manual can opener has over 17 years of success in foodservice worldwide utilizing proprietary can opening technology. The patented S-11 has successfully opened nearly one billion cans without a single complaint – giving it a stainless reputation. Add in the industry's longest warranty and you've got an opener that's a cut above any other.



- 5-year warranty
- NSF Certified
- Dishwasher safe
- Made in U.S.A.
- Rustproof stainless steel construction
- Parts remove easily for replacement
- Tamper proof model also available
- Available with screw down base or clamp on model
- Standard size or with long bar for taller cans
- Patented

Open up to a higher standard in food safety.



Dishwasher Safe
Toss in the dishwasher for easy cleaning. The industry's first all-stainless can opener, the S-11 resists rust and stays looking new, no matter how many times it's washed.

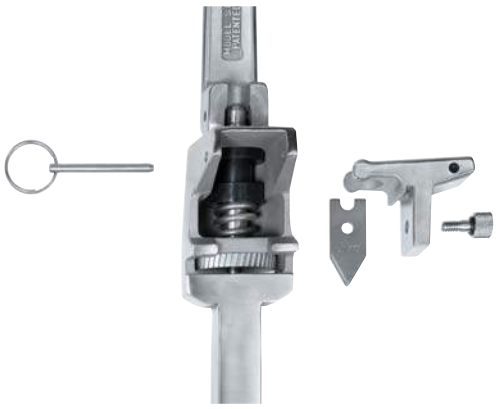

Fewer Parts
The S-11's advanced design means fewer parts than most other openers, and its patented Quick Change Mechanism makes knife and gear replacement fast and easy.



Quick Change Mechanism
Makes gear replacement fast and easy.



S-11 with clamp base

Tamper proof S-11 opener with tamper proof base



ST-93 Rustproof can opener cleaning tool



A tamper proof version of the S-11 is now available equipped with locking hardware.



SPECIFICATIONS:

MODEL #	DESCRIPTION	PRODUCT CODE	CASE CUBE FT^3/M^3	CASE WEIGHT LBS./KGS
S-11	Stainless Steel Can Opener With cast stainless steel base	15000	3.3/0.1	30/13.6
S-11 L	With long bar for cans up to 17″ high (50cm)	15300	3.3/0.1	30/13.6
S-11 E	Comes complete with ST-93 cleaning tool and extra knife and gear	15400	3.3/0.1	31/14.1
S-11 C	Clamping Base Model Now available with clamp instead of screws Secures to underside of table	15020	3.3/0.1	30/13.6
S-11 CL	Clamping Base Model With long bar for cans up to 17″ high (50cm)	15320	3.3/0.1	30/13.6
S-11 CE	Clamping Base Model complete with ST-93 cleaning tool and extra knife and gear	15420	3.3/0.1	32/14.5
S-11 WB	Without Base	15200	3.3/0.1	21/9.5
S-11 TP	Tamper Proof Opener With tamper proof base	15080	3.3/0.1	30/13.6
ST-93	Rustproof can opener cleaning tool	38500		.5/.2

Note: S-11 Series standard length bar is 16″ (40.6 cm) long. Extra long bar is 22″ (55.9) cm) long.

EDLUND ISO 9001:2000 CERTIFIED NSF®

Edlund We're in your kitchen.™

Edlund Company, Inc., 159 Industrial Parkway, Burlington, VT 05401 800-772-2126 www.edlundco.com

WARRANTY INFORMATION: THE EDLUND COMPANY WARRANTS THESE PRODUCTS TO BE FREE FROM DEFECTS IN MATERIAL AND WORKMANSHIP FOR A PERIOD OF ONE YEAR FROM DATE OF PURCHASE. THE COMPANY'S OBLIGATION UNDER THIS WARRANTY IS LIMITED TO REPAIRING OR REPLACING WITHOUT CHARGE ANY PART OR PARTS FOUND TO BE DEFECTIVE UNDER NORMAL USE. IT IS THE RESPONSIBILITY OF THE PURCHASER TO RETURN THE ENTIRE UNIT TO THE FACTORY, TRANSPORTATION CHARGES PREPAID. THIS WARRANTY DOES NOT COVER PARTS THAT MUST BE REPLACED UNDER NORMAL USE, INCLUDING KNIVES AND DRIVE GEARS ON CAN OPENERS. NO OTHER WARRANTY, WRITTEN OR VERBAL, IS AUTHORIZED BY THE COMPANY. WARRANTY INFORMATION OUTSIDE THE UNITED STATES MAY VARY, CONSULT YOUR DISTRIBUTOR.

12/07 ED01-4021

NSF Manual Can Openers



S-11 Made in U.S.A.

S-11 MANUAL CAN OPENERS WITH 5 YEAR WARRANTY!

The most sanitary can opener in the world! Rustproof, NSF Certified and dishwasher safe. All stainless steel. Parts remove easily for replacement.

Model Number	Description	Product Code	Case Cube Ft3/M3	Master Case	Case Weight lbs./kgs
S-11	Stainless Steel Can Opener (NSF Certified) With cast stainless steel base	15000	3.3/0.1	3	30/13.6
S-11L	With long bar for cans up to 17" high (50 cm)	15300	3.3/0.1	3	30/13.6
S-11E	**"Extra Value"** comes complete with ST-93 cleaning tool and 1 extra knife and gear	15400	3.3/0.1	3	31/14.1
S-11C	Clamping Base Model (NSF Certified) Now available with clamp instead of screws. Secures to underside of table	15020	3.3/0.1	3	30/13.6
S-11CL	With long bar for cans up to 17" high (50 cm)	15320	3.3/0.1	3	30/13.6
S-11CE	**"Extra Value"** – Clamping Base Model complete with ST-93 cleaning tool and extra knife and gear.	15420	3.3/0.1	3	32/14.5
S-11WB	Without Base	15200	3.3/0.1	3	21/9.5
S-11TP	Tamper resistant opener with tamper proof base	15080	3.3/0.1	3	30/13.6

Note: S-11 has standard bar length of 16" (40.6 cm) long. Extra long bar is 22" (55.9 cm) long.

U SERIES MANUAL CAN OPENERS

Edlund now offers the Universal Series Manual Can Openers. These can openers offer substantial improvements over our popular #1® and #2® models. The U-12 includes many of the same design features as our S-11 standard openers, with quick change gear, stainless steel shaft and pull pin for easy blade replacement. The base design features a replaceable insert for a tighter fit and easier slide action. Other base options are also available. NSF Certified.

Model Number	Description	Product Code	Case Cube Ft3/M3	Master Case	Case Weight lbs./kgs
U-12	Quick change NSF can opener with standard length bar and new plated base	14100	3.3/0.1	3	21/9.5
U-12WB	NSF Opener without base	14000	3.3/0.1	3	21/9.5
U-12S	NSF Opener with stainless steel base	14200	3.3/0.1	3	21/9.5
U-12C	NSF Opener with cast stainless steel clamp base	14010	3.3/0.1	3	22/9.9
U-12L	NSF Opener with long bar and plated steel base	14500	3.3/0.1	3	22/9.9
U-12SL	NSF Opener with long bar and stainless steel base	14600	3.3/0.1	3	22/9.9
U-12CL	NSF Opener with long bar and cast stainless steel clamp base	14300	3.3/0.1	3	23/10.4

Note: U-12 Series standard bar length is 16" (40.6 cm) long. Extra long bar is 22" (55.9 cm) long.



U-12 Made in U.S.A.



SG-2 Made in U.S.A.

SG-2 NSF STANLESS MANUAL CAN OPENERS WITH 2 YEAR WARRANTY!

For operators who only require a lighter duty manual can opener but want full stainless steel protection, Edlund introduces the SG-2 Model. The flagship of our popular G-2 Series Openers, this new model is all stainless steel, dishwasher safe, and features our patented quick change knife and gear system, and comes with a full two year warranty. A great opener for a Global Marketplace.

Model Number	Description	Product Code	Case Cube Ft3/M3	Master Case	Case Weight lbs./kgs
SG-2	NSF Stainless Opener with standard bar and stainless base	13100	3.3/0.1	3	18/8.1
SG-2C	NSF Stainless Opener with stainless clamp base	13200	3.3/0.1	3	20/9
SG-2L	NSF Stainless Opener with long bar and stainless base	13300	3.3/0.1	3	20/9
SG-2CL	NSF Stainless Opener with long bar and stainless clamp base	13400	3.3/0.1	3	22/9.8

Note: SG-2 Series standard bar length is 16" (40.6 cm) long. Extra long bar is 22" (55.9 cm) long.

Edlund blades are reversible for longer life and available through your dealer.

Edlund G-2 Manual Can Opener

The "G" in our new G-2 can openers stands for global. This new opener was designed to meet the requirements of most any Foodservice operation. If you search the world over, you would not find a better all-around opener.



G-2 available with long or short bar and several base options.

FEATURES:

- Reversible blade for longer life
- Melonite arbor to resist rust
- Specially designed plastic bushing for longer life
- Bases available in plated or stainless steel screw down version or all stainless steel clamp mounting versions
- Welded stainless steel shaft
- New base design features a replaceable insert for tighter and smoother action
- Made in U.S.A.

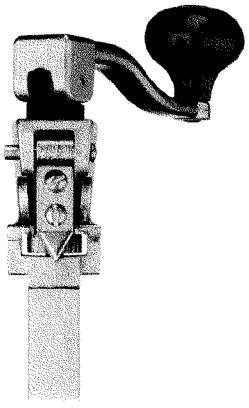

G-2 as shown with reversible steel blade for long life.

SPECIFICATIONS:

MODEL #	DESCRIPTION	PRODUCT CODE	CASE CUBE FT^3/M^3	CASE WEIGHT LBS./KGS
G-2	Can opener with standard length bar and plated base	16100	2.6/.07	31/14.1
G-2 S	Opener with standard length bar and stainless steel base	16200	2.6/.07	31/14.1
G-2 L	Can opener with long bar and plated steel base	16500	2.3/.07	4/1.8
G-2 SL	Can opener with long bar and stainless steel base	16600	2.3/.07	4/1.8
G-2 CL	Can opener with long bar and cast stainless steel clamp base	16700	2.3/.07	4/1.8
ST-93	Rustproof can opener cleaning tool	38500		.5/.2

Note: G-2 Series standard length bar is 16" (40.6 cm) long. Extra long bar is 22" (55.9) cm) long.

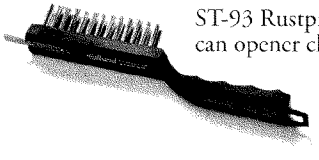

ST-93 Rustproof can opener cleaning tool

ISO 9001 CERTIFIED

Edlund *Our reputation is virtually stainless.*

Edlund Company, Inc., 159 Industrial Parkway, Burlington, VT 05401 802-862-9661 www.edlundco.com

WARRANTY INFORMATION: THE EDLUND COMPANY WARRANTS THESE PRODUCTS TO BE FREE FROM DEFECTS IN MATERIAL AND WORKMANSHIP FOR A PERIOD OF ONE YEAR FROM DATE OF PURCHASE. THE COMPANY'S OBLIGATION UNDER THIS WARRANTY IS LIMITED TO REPAIRING OR REPLACING WITHOUT CHARGE ANY PART OR PARTS FOUND TO BE DEFECTIVE UNDER NORMAL USE. IT IS THE RESPONSIBILITY OF THE PURCHASER TO RETURN THE ENTIRE UNIT TO THE FACTORY, TRANSPORTATION CHARGES PREPAID. THIS WARRANTY DOES NOT COVER PARTS THAT MUST BE REPLACED UNDER NORMAL USE, INCLUDING KNIVES AND DRIVE GEARS ON CAN OPENERS. NO OTHER WARRANTY, WRITTEN OR VERBAL IS AUTHORIZED BY THE COMPANY. WARRANTY INFORMATION OUTSIDE THE UNITED STATES MAY VARY, CONSULT YOUR DISTRIBUTOR.

5/99 ED01-271

Electric Can Openers

TWO SPEED ELECTRIC CAN OPENERS

ALL EDLUND ELECTRIC CAN OPENERS ARE MADE IN THE U.S.A.

USDA accepted



270 **3 YEAR WARRANTY!**

The only NSF Certified electric can opener for heavy volume operators.
Now with 3 year warranty. Equipped with 2 speed motor and featuring knife and gear assemblies that can be removed without tools for easy cleaning. The slower second speed helps prevent spillage while opening smaller cans.

Model Number	Description	Product Code	Case Cube Ft3/M3	Master Case	Case Weight lbs./kgs
270	NSF Certified Electric Can Opener 115 Volt	27000	1/.03	1	19/8.6
270	NSF Certified Electric Can Opener 230 Volt (for U.S. specifications only)	27200	1/.03	1	19/8.6

Models available with permanent mounting bracket to prevent theft.

Model Number	Description	Product Code	Case Cube Ft3/M3	Master Case	Case Weight lbs./kgs
270B	NSF Certified Electric Can Opener with security lock-down bracket 115 Volt	27010	1/.03	1	20/9
270B	NSF Certified Electric Can Opener with security lock-down bracket 230 Volt (for U.S. specifications only)	27300	1/.03	1	20/9



270C

270 Continental! with gas shock slide bar mounting is safer and easier to use. Easily adjusts for multiple international can sizes. CE Certified.

Model Number	Description	Product Code	Case Cube Ft3/M3	Master Case	Case Weight lbs./kgs
270C	Electric Can Opener with gas shock Slide Bar 115 Volt	27400	3.3/.1	1	32/14.4
270C	Electric Can Opener with gas shock Slide Bar 230 Volt (for U.S. specifications only)	27500	3.3/.1	1	32/14.4



203

The #203 Electric Can Opener has been a reliable workhorse for over 30 years. Especially suited for schools and hospitals or operations that open more than one size of cans. The slower second speed for smaller cans prevents spilling of liquids.

Model Number	Description	Product Code	Case Cube Ft3/M3	Master Case	Case Weight lbs./kgs
203	Electric Can Opener 115 Volt 2 speeds	23100	1.1/.03	3	42/18.9
203	Electric Can Opener 230 Volt 2 speeds (for U.S. specifications only)	23200	1.1/.03	3	42/18.9

SINGLE SPEED ELECTRIC CAN OPENERS

Model Number	Description	Product Code	Case Cube Ft3/M3	Master Case	Case Weight lbs./kgs
266	Electric Can Opener 115 Volt	26100	1.1/.03	3	42/18.9
266	Electric Can Opener 230 Volt (for U.S. specifications only)	26200	1.1/.03	3	42/18.9



266

CLEANING TOOLS

Model Number	Description	Product Code	Case Cube Ft3/M3	Master Case	Case Weight lbs./kgs
ST-93	New Rustproof Can Opener Cleaning Tool – with stainless steel bristles and stainless scraper. Recommended for maintaining proper sanitation on all can openers	38500		1	.5/.2



ST-93

Project	Quantity	Item #
Model Specified:		CSI Section 11400

Roll-Thru Refrigerator Models For 66" High Racks/Self-Contained



Model Shown Three Section

One, Two & Three Section Models, 32" Deep

R SERIES
Stainless Exterior & Interior

1-Section Solid Door Model	RRI132LPUT-FHS*
2-Section Solid Door Model	RRI232LPUT-FHS*
3-Section Solid Door Model	RRI332LPUT-FHS

A SERIES
Stainless Exterior, Anodized Aluminum Interior

1-Section Solid Door Model	ARI132LPUT-FHS*
2-Section Solid Door Model	ARI232LPUT-FHS*
3-Section Solid Door Model	ARI332LPUT-FHS

The "L-Height" roll-thru refrigerator models are all designed to offer convenient interior storage for 66" high racks. Each is supplied standard with such high quality features as easy to operate microprocessor controls, balanced refrigeration systems and stainless steel exteriors. Additionally, they offer the widest range of optional accessories to choose from, and can be specified for use with many different applications, including: Foodservice, Correctional, Institutional, Export, etc.

Standard Product Features

- Traulsen's Smart Control With LED Display
- R-Series: Stainless Steel Exterior & Interior
- A-Series: Stainless Steel Exterior/Anodized Aluminum Interior
- Balanced, Self-Contained Refrigeration System Using R-450A
- Rear Biased Return Air Duct
- Full Length Stainless Steel Doors With Locks
- Self-Closing Doors With Stay Open Feature At 120 Degrees
- Guaranteed For Life Cam-Lift Hinges
- Guaranteed For Life Horizontal Work Flow Door Handle(s)
- Standard Door Hinging F & R: 132LP = Right, 232LP = Left/Right, 332LP = Left/Right/Right (other hingings available)
- Automatically Activated LED Lights
- Stainless Steel Breaker Caps
- Accommodates Roll-In Racks Up To 66" High (provided by others)
- Automatic Non-Electric Condensate Evaporator
- Magnetic Snap-In EZ-Clean Door Gasket(s)
- Gasket-Protecting Metal Door Liner
- Thermostatic Expansion Valve Metering Device
- Stainless Steel One-Piece Louver Assembly
- Stainless Steel Interior Rack Guides & Threshold Ramp(s)
- 9' Cord & Plug Attached
- ThreeYear Parts And Labor Warranty
- Five Year Compressor Warranty

Options & Accessories

- Re-Hinging Feature For Door(s)
- Wire Shelf Package For Roll-Thru Models (includes three wire shelves per section)
- Additional Wire Shelves For Above
- Stainless Steel Shelf Package For Roll-Thru Models (includes three stainless steel shelves per section)
- Additional Stainless Steel Shelves For Above
- Locking Hasps (padlocks supplied by others)
- Export 220/50/1 Voltage
- Glass Door(s) In Place Of One Or More Stainless Steel Door(s) (available on one or both sides, please note model number suffix will change to -FHG, n/a on three section models)
- Kool Klad Exterior Laminate Decor
- Remote Applications (see form TR35837 for more details)
- Remote For Use With 20°F Glycol System
- Recessed Installation
- Prison/Correctional Facilities Options

ENERGY STAR

* ***Noted models are ENERGY STAR®*** listed. ***Please refer to www.energystar.gov to view the most up-to-date product listing and performance data.***

c UL us LISTED

NSF

Listed by Underwriters Laboratories Inc., to U.S. and Canadian safety standards and Listed by NSF International.

3-YEAR PARTS & LABOR WARRANTY

Approval: _____

Traulsen
TRAULSEN
4401 BLUE MOUND RD. FT. WORTH, TX 76106
PHONE 1 (800) 825-8220 FAX-MKTG. 1 (817) 624-4302
Website: www.traulsen.com

Project	Quantity	Item #
Model Specified:		CSI Section 11400

Specifications

Construction, Hardware and Insulation

Cabinet exterior front, one piece sides, louver assembly and doors are constructed of 20 gauge stainless steel with #4 finish. Cabinet interior and door liners are constructed of stainless steel (anodized aluminum in the A-Series). The exterior cabinet top and bottom are constructed of heavy gauge aluminized steel. The interior floor is constructed of stainless steel and insulated with ¾" of resilient cork. Readily attachable stainless steel ramps are provided to facilitate loading/unloading.

Doors are equipped with a heavy-duty, extruded wiper gasket for sealing to bottom ramp, removable plug cylinder locks and guaranteed for life cam-lift, gravity action, self-closing metal, glide hinges with stay open feature at 120 degrees. Hinges include a concealed switch to automatically activate the interior LED lighting. Guaranteed for life, work flow door handles are mounted horizontally over recess in door which limits protrusion from door face into aisleways. Doors have seamless, polished metal corners.

Gasket profile and Santoprene® material simplify cleaning and increase overall gasket life. Both the cabinet and door(s) are insulated with an average of 2" thick high density, non-CFC, foamed in place polyurethane.

DIMENSIONAL DATA	R/ARI132LPUT	R/ARI232LPUT	R/ARI332LPUT
Net capacity cu. ft.	38.8 (1099 cu l)	80.2 (2272 cu l)	117.5 (3329 cu l)
Length - overall in.	35½ (90.2 cm)	68 (172.7 cm)	100½ (255.3 cm)
Depth - overall in.	39⅛ (99.4 cm)	39⅛ (99.4 cm)	39⅛ (99.4 cm)
Depth - over body in.	32 (81.3 cm)	32 (81.3 cm)	32 (81.3 cm)
Depth - doors open 90° in.	94½ (240.0 cm)	94½ (240.0 cm)	94½ (240.0 cm)
Clear door width in.	27⅛ (68.8 cm)	27⅛ (68.8 cm)	27⅛ (68.8 cm)
Clear door height in.	66⅝ (168.4 cm)	66⅝ (168.4 cm)	66⅝ (168.4 cm)
Height - overall in[3]	83¼ (211.5 cm)	83¼ (211.5 cm)	83¼ (211.5 cm)
RRI Net Wt. lbs.	490 (222 kg)	775 (352 kg)	1050 (476 kg)
ARI Net Wt. lbs.	415 (188 kg)	670 (304 kg)	915 (415 kg)
Rack Capacity - 66" High	1	2	3
ELECTRICAL DATA			
Voltage	115/60/1	115/60/1	115/60/1
Feed wires with Ground	3	3	3
Full load amperes	11.6	13.4	15.2
REFRIGERATION DATA			
Refrigerant	R-450A	R-450A	R-450A
Refrigerant Charge Amount	18oz	27 oz	30 oz
BTU/HR H.P.[1]	2220 (⅓ HP)	4200 (½ HP)	5120 (¾ HP)

NOTES

NOTE: Figures in parentheses reflect metric equivalents.
1= Based on a 90 degree F ambient and 20 degree F evaporator.
2= For approximate remote weights deduct 40 lbs. from respective net or gross weight. For other information on remote models, please refer to form TR35837.
3= 12" Top clearance preferred for optimum performance and service access.

Refrigeration System

A top mounted, self-contained, balanced refrigeration system using environmentally friendly, R-450A refrigerant is conveniently located behind the one piece louver assembly. It features an easy to clean front facing condenser, thermostatic expansion valve, air-cooled hermetic compressor, large, high humidity evaporator coil located outside the food zone and a top mounte d non-electric condensate evaporator. Biased return air duct protects against introduction of warm kitchen air, promoting even temperature maintenance and efficient operation. A 9' cord and plug is provided. Standard operating temperature is 34 to 38°F.

Controller

Traulsen's Smart Control features advanced control algorithms and sophisticated diagnostic capabilities. Smart sensors will adapt the operation of the refrigeration system to a variety of environments and usage patterns. The Smart Control offers a complete set of visual alarms designed to alert the user to critical events. In the event of an alarm, a dedicated Alarm LED will illuminate, informing the user of the critical event and describing the event in the large, easy to read full text display.

Interior

Readily removable, interior-mounted, stainless steel guides for rack are provided for protection. Maximum rack size with wheels inboard of frame is 27" wide by 29" deep by 66" high. Racks supplied by others.

Warranties

Both a three year parts and labor warranty and a five year compressor warranty (self-contained models only) are provided standard.

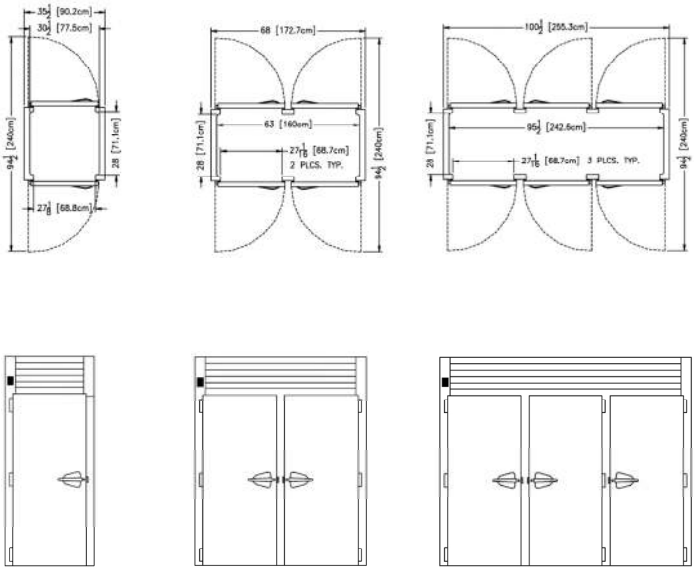

One Section Models Equipped With One NEMA 5-15P Plug

Two & Three Section Models Equipped With One NEMA 5-20P Plug

NOTE: Full load amps and plug style may vary depending on electrical options chosen and condensing unit employed.

Section - All Models

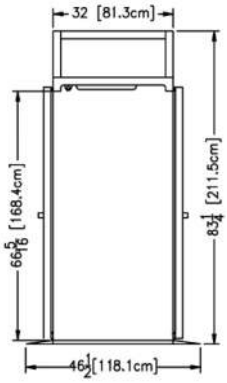

NOTE: When ordering please specify: Voltage, Hinging, Door Size, Options and any additional warranties.

Continued product development may necessitate specification changes without notice.
Part No. TR35767 (REV. 12-17-18)

TRAULSEN
4401 BLUE MOUND RD. FT. WORTH, TX 76106
PHONE 1 (800) 825-8220 FAX-MKTG. 1 (817) 624-4302
Website: www.traulsen.com

FOOD WARMING EQUIPMENT

Specification Page: S10–13

PROJECT:	MODEL:	QUANTITY:	ITEM NO:

ALUMINUM RACKS

Transport 18" x 26" Trays, 12" x 20" Pans, and Oval Trays

"OTR SERIES"

ALUMINUM



OTR-FUA-05-11
Universal Rack



OTR-OT-06-10
Wide 6-3/8" tray ledge supports oval trays



OTR-UA-13
Universal Adjustable Rack

Economical and functional aluminum racks for transport, bussing and storage.

CHOICE OF THE PROFESSIONALS Since 1953 ™

These sturdy aluminum racks provide an economical solution for your transport and storage needs. Fabricated from high tensile extruded aluminum, the "OTR Rack Series" hold up to the demands in hotels, motels, restaurants, hospitals, bakeries . . . *and rugged enough for even correctional facilities.*

They're heavy-duty, yet light weight and easy to maneuver, even when fully loaded with roasting pans, steam table pans, sheet trays, or oval tray sheet pans.

The extruded aluminum runners are double welded for extra strength.

These racks are easy to clean and can be completely sanitized, washed, or steam cleaned while remaining rust resistant.

FWE...the "Choice of the Professionals."

- ◊ **Heavy-duty aluminum**
- ◊ **All welded construction - no rivets**
- ◊ **Welded tubular construction**
- ◊ **5" polyurethane casters**
- ◊ **Tray guides vary in style and type by model (details on other side)**
- ◊ **Two year limited warranty**

NSF

Queen Marys & Utility Carts
Section 10

PROJECT:	MODEL:	QUANTITY:	ITEM NO:

SPECIFICATIONS:

ALUMINUM RACKS
For multi-purpose back-up

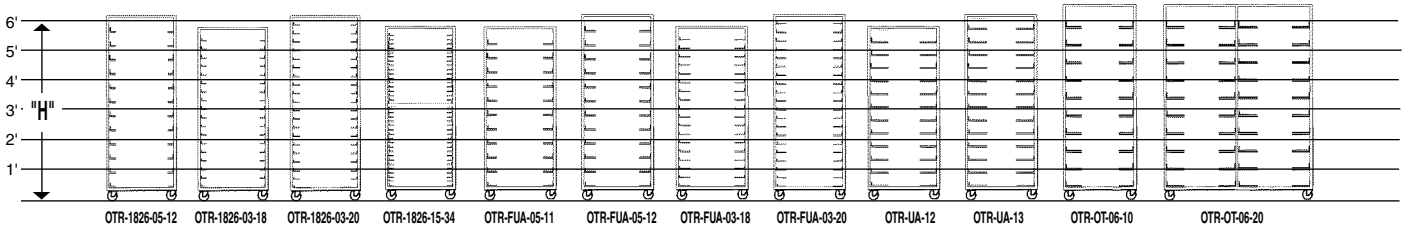

TRAY GUIDE DESCRIPTION



OTR-1826

1.5" (38)

18" x 26" TRAY GUIDE

OTR-FUA

3.125" (79)

UNIVERSAL TRAY GUIDE





OTR-UA

ADJUSTABLE TRAY GUIDE

3.125" (79)

OTR-OT

OVAL TRAY GUIDE

6.75" (171)



Consult Factory for SHIPPING CLASS

MODEL NUMBER	CAPACITIES: NUMBER OF TRAYS / PANS 18" x 26"	12" x 20"	OVAL	LOAD OPENING	SPACINGS (mm)	TRAY GUIDE LEDGE SIZE (mm)	OVERALL EXTERIOR DIMENSIONS IN. (mm): HIGH "H"	DEEP "D"	WIDE "W"	CASTER SIZE	SHIP WT. LBS. (KG)	CUBIC FEET (m3)
18" x 26" Racks - fixed spacings												
OTR-1826-05-12	12	---	---	18.375" (467)	5" (127)	1.875" (48)	69" (1753)	26" (660)	20.5" (521)	5" All Swivel	60 (28)	21.80 (.62)
OTR-1826-03-18	18	---	---	18.375" (467)	3" (76)	1.875" (48)	64" (1626)	26" (660)	20.5" (521)	5" All Swivel	80 (36)	20.54 (.58)
OTR-1826-03-20	20	---	---	18.375" (467)	3" (76)	1.875" (48)	69" (1753)	26" (660)	20.5" (521)	5" All Swivel	85 (40)	21.80 (.62)
OTR-1826-15-34	34	---	---	18.375" (467)	1.5" (38)	1.5" (38)	64" (1626)	26" (660)	20.5" (521)	5" All Swivel	90 (42)	21.33 (.60)
Universal Racks - fixed spacings												
OTR-FUA-05-11	11	11	---	18.375" (467)	5" (127)	3.125" (79)	64" (1626)	26" (660)	20.5" (521)	5" All Swivel	85 (40)	21.33 (.60)
OTR-FUA-05-12	12	12	---	18.375" (467)	5" (127)	3.125" (79)	69" (1753)	26" (660)	20.5" (521)	5" All Swivel	90 (42)	22.64 (.64)
OTR-FUA-03-18	18	18	---	18.375" (467)	3" (76)	3.125" (79)	64" (1626)	26" (660)	20.5" (521)	5" All Swivel	90 (42)	21.33 (.60)
OTR-FUA-03-20	20	20	---	18.375" (467)	3" (76)	3.125" (79)	69" (1753)	26" (660)	20.5" (521)	5" All Swivel	105 (48)	22.64 (.64)
Universal Racks - adjustable on 1.5" spacings												
OTR-UA-12	12	24	12	22.375" (568)	3.125" (79)	5" (127)	64" (1626)	26" (660)	24.5" (622)	5" 2 Swivel	118 (54)	28.31 (.80)
OTR-UA-13	13	26	13	22.375" (568)	3.125" (79)	5" (127)	70" (1778)	26" (660)	24.5" (622)	5" 2 Swivel	125 (57)	30.05 (.85)
Oval Tray Racks - wide angle fixed spacings												
OTR-OT-06-10	10	20	10	22.375" (568)	6" (152)	6.75" (171)	70" (1778)	30" (762)	26" (660)	5" 2 Swivel	70 (32)	28.13 (.80)
OTR-OT-06-20	20	40	20	22.375" (568)	6" (152)	6.75" (171)	70" (1778)	30" (762)	50.75" (1289)	5" 2 Swivel	160 (72)	55.13 (1.56)

CONSTRUCTION. Heavy-duty extruded type 6063 aluminum alloy. All uprights and runners are fully welded.

TRAY GUIDES. Tray guides are welded to the uprights. Spacings and ledge size vary in dimensions for intent of purpose and are indicated on chart above.

CASTERS. 5 inch heavy-duty, easy rolling, polyurethane tire casters with 1.5" wheel.

FWE Products are used by major companies world-wide. We can modify, design, or custom build equipment to fit your special requirements.

Food Warming Equipment Company, Inc.
P.O. Box 1001
Crystal Lake, IL 60039 USA
800-222-4393; 815-459-7500
Fax: 815-459-7989

Manufacturing Facilities:
7900 S. Route 31
Crystal Lake, IL 60014 USA
www.FWE.com sales@fweco.net

FWE products may be covered under one or more of the following U.S. patents: 288,299;238,300;3,952,609;4,192,991.

All specifications subject to change without notice.
© 09D Food Warming Equipment Company, Inc.

CRES COR®

JOB: _____

ITEM NO: _____

INSULATED HOT CABINET MODEL H-138-1834D

FEATURES AND BENEFITS:

- Fully insulated hot cabinet keeps prepared foods at serving temperatures.
- Powerful, yet efficient, 1500 Watt heating system maintains the right temperature to properly hold products. Heats up to 200˚F (93˚C).
- Standard solid state electronic control with large, clear, easy-to-read and operate LED digital display to ensure holding at precise food temperature.
- Internal frame in body maintains structural rigidity.
- Body constructed of non-corrosive, Hi-Tensile aluminum for strength and ease of mobility. One piece extended base protects cabinet body.
- Smooth interior coved corners prevent food particle/grease buildup.
- Self-closing insulated Dutch doors prevent temperature loss; magnetic door gaskets for proper seal. Field reversible for flexibility.
- Standard with right hand hinging; left hand hinging available upon request.
- Full length anti-microbial extruded door handles for “easy open”; positive catch secures door during transport.
- Recessed push/pull handles on both sides prevents damage to walls; allows easy maneuvering.
- Channel pan slides securely hold 18" x 26" pans on 1-1/2" centers without tipping.
- Heavy duty 5" swivel casters, two with brakes. Provides mobility when fully loaded.



H-138-1834D



Standard solid state electronic control with large, clear, easy-to-read and operate LED digital display to ensure holding at precise food temperature

ACCESSORIES and OPTIONS (Available at extra cost):

- ❑ Tempered Glass Door Windows
- ❑ Corner Bumpers
- ❑ Perimeter Bumper
- ❑ Floor Lock (for use with 5" casters)
- ❑ Various Caster Options
- ❑ Removable Cord Set
- ❑ 208 or 240 Volt Service
- ❑ Magnetic Door Latch
- ❑ Upgrade to 2000 Watt Power Unit

See page B-20 for accessory details.

CRES COR®
5925 Heisley Road • Mentor, OH 44060-1833
Phone: 877/CRESCOR • Fax: 440/350-7267
www.crescor.com

GOLD Gold indicates our Best Insulated Hot Cabinets with the best warranty in the industry.
3-Year Parts / 1-Year Labor.

H-138-1834D

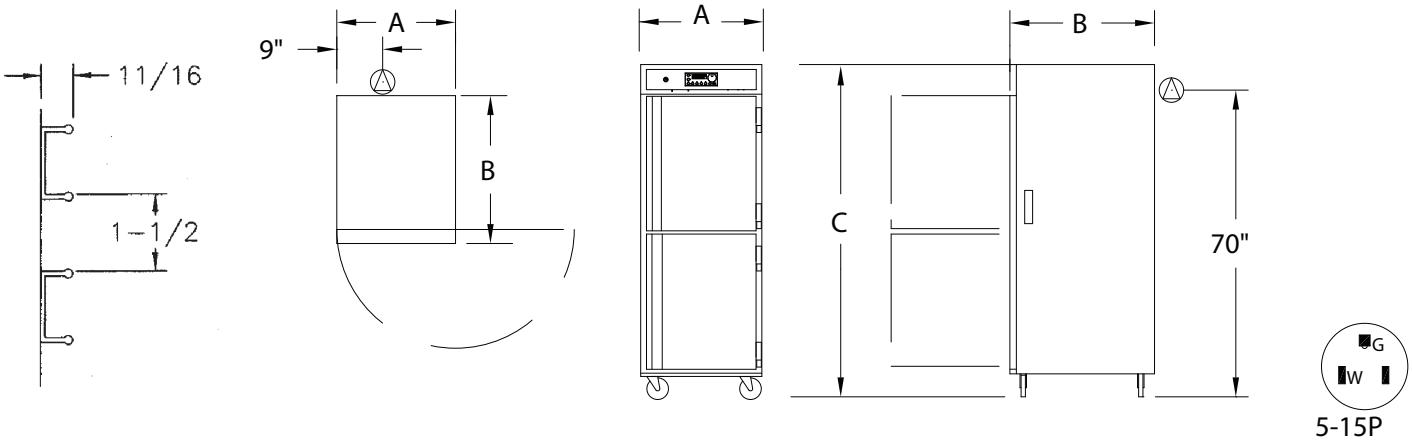

CRES COR MODEL NO.	PAN			DIM "A"	DIM "B"	DIM "C"	INSIDE DIMENSIONS				WEIGHT ACT.
	CAP	SIZE		WIDTH	DEPTH	HEIGHT	WIDTH	DEPTH	HEIGHT		
H-138-1834D	32	18 X 26	IN	28-3/4	32-3/4	73	18-1/16	26-7/8	58	LBS	245
		460 X 660	MM	730	835	1855	460	685	1475	KG	111

NOTES: 1. Send sample pan or tray with order when using any that are not 18" x 26" pans with heavy beaded edges.
2. When ordering bumpers, add 2" to overall dimensions.

GOLD

Gold indicates our Best Insulated Hot Cabinets with the best warranty in the industry.
3-Year Parts / 1-Year Labor.

CABINET:
- Body: .063 aluminum.
- Reinforcement: Internal framework of 18 ga. stainless steel.
- Insulation: Fiberglass, thermal conductivity (K factor) is .23 at 75˚F. 1-1/2" in doors, top, base; 2" in sidewalls.
- Air tunnels: 22ga. stainless steel; lift-out type, mounted on sides.
- Push/pull handles (2): 5” vertical; recessed.
- Interior coved corners.

BASE:
- One piece construction, .125 aluminum.
- Casters: 5" dia., swivel, modulus tires, 1-1/4 wide, load cap. 250 lbs. each, temp. range -45˚/+180˚F. Delrin bearings. Front casters equipped with brakes.

DUTCH DOORS:
- Field reversible.
- Inner and outer: .063 aluminum.
- Extruded handles.
- Hinges: Self-closing, stays open past 90°.
- Gaskets: Perimeter type, magnetic santoprene.
- Pan stop: Embossed.
- Latches: Positive transport type with lock hasp.

PAN SLIDES:
- Channels: Extruded aluminum, 11/16 x 1-1/2 x .100, riveted on 1-1/2" centers.

Scan QR code to view Spec Sheet, Operating Manual, Wiring Diagram or to call Customer Service.

If you need a QR reader visit your App Store on your Smartphone or Tablet.

HOT UNIT COMPONENTS:
- Thermostat: Solid state digital display control, room ambient to 200˚F (93˚C).
- Switch: ON-OFF push button type.
- Power cord: Permanent, 10 ft., 14/3 ga.
- Heater: 1470 Watts.
- Blower motor.
- Vent fan.
- Thermometer: Digital.

POWER REQUIREMENTS:
- 1500 Watts, 120 Volts, 60 Hz., single phase, 12 Amps., 15 Amp. service.

SHORT FORM SPECIFICATIONS

Cres Cor Insulated Hot Cabinet Model H-138-1834C. Solid state electronic controlled times and temperatures. Inner, outer and top liners of .063 aluminum; stainless steel internal frame. No-tip .100 aluminum channel slides for (32) 18"x 26" pans on 1-1/2" centers. Field reversible Dutch doors, made from .063 aluminum. Fiberglass insulation in sides 2"; doors, top, base 1-1/2". Interior coved corners. 1500 Watt, 120 Volt power unit. One piece base, .125 aluminum. 5" swivel modulus casters, Delrin bearings. Load capacity 250 lbs. each. 3-Year Parts / 1-Year Labor warranty. Provide the following accessories: ____ ____ ____ .

CRES COR®
5925 Heisley Road • Mentor, OH 44060-1833
Phone: 877/CRESCOR • Fax: 440/350-7267
www.crescor.com

© Crescent Metal Products, Inc. 2016 All rights reserved.

In line with its policy to continually improve its products, CRES COR reserves the right to change materials and specifications without notice.

Litho in U.S.A.

CRES COR®

PROOF HOT CABINETS **D**

ACCESSORIES

PERIMETER BUMPER
#1405-000

Non-marking reinforced gray rubber strip mounts to base of cabinet for protection. Adds 2" to depth and width.



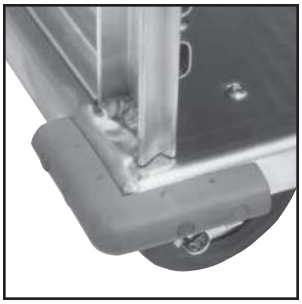

CORNER BUMPERS
#1056-002

Non-marking gray rubber strips mount to corners of cabinet base for protection. Adds 2" to depth and width.

PUSH HANDLE
#1087-000

Stainless steel rod with donut bumper on each end mounts 40" from floor to back or side of cabinet (specify location). Provides maneuverability.





BAIL HANDLE KIT
#1265-000

Two grip handles mounted to each side of cabinet 30" from floor for lifting and maneuvering. Drop to sides when not in use.



CASTER OPTIONS

Standard 5" dia. modulus casters can be substituted with polyurethane wheels or wheels of various diameters. Contact factory for casters available for your application.

CRES COR®
5925 Heisley Road • Mentor, OH 44060-1833
Phone: 877/CRESCOR • Fax: 440/350-7267
www.crescor.com

PAN SIZE CHART
for Universal Angle Models (-UA)

Cres Cor adjustable universal angles are designed to hold trays and pans shown below and in illustration on right.

Quantity of angles and adjustment increments are found on the product catalog page.

PAN TYPES AND SIZES

		Capacity per set of angles
1	Maxi Pan (20-3/4" x 25-1/2" x 1-1/8")	1
	European Standard Gastro-Norm Pan (20-3/4" x 25-1/2" x 3/4")	1
2	Steam Table Pan (12" x 20" x 2-1/2")	2
	Steam Table Pan (12" x 20" x 4")	2
3	Roast Pan (10-7/8" x 19-3/4" x 3-1/2")	2
	Roast Pan (10-7/8" x 19-3/4" x 2-1/4")	2
4	Roasting Pan (18" x 26" x 4")	1
	Deep Roasting Pan (22-1/2" x 20-1/2" x 6-1/2")	1
	Baking Pan (18" x 26" x 2")	1
5	Steam Table Pan (12" x 20" x 4")	2
	Steam Table Pan (12" x 20" x 2")	2
6	Baking Pan (20" x 22" x 4")	1
	Baking Pan (20" x 22" x 2")	1
	Baking Pan (20" x 22" x 1")	1
7	Steam Table Pan (12" x 20" x 2")	2
	Steam Table Pan (12" x 18" x 6")	2
	Bun Pan (18" x 26" x 1")	1
	Half Size Bun Pan (18" x 13" x 1")	2
8	Steam Table Pan (12" x 20" x 4")	2
	Steam Table Pan (12" x 20" x 2")	2
	Cup and Glass Rack (20" x 20")	1
	Service Tray (14" x 18")	2
	Half Size Wire Basket (18" x 13" x 4")	2

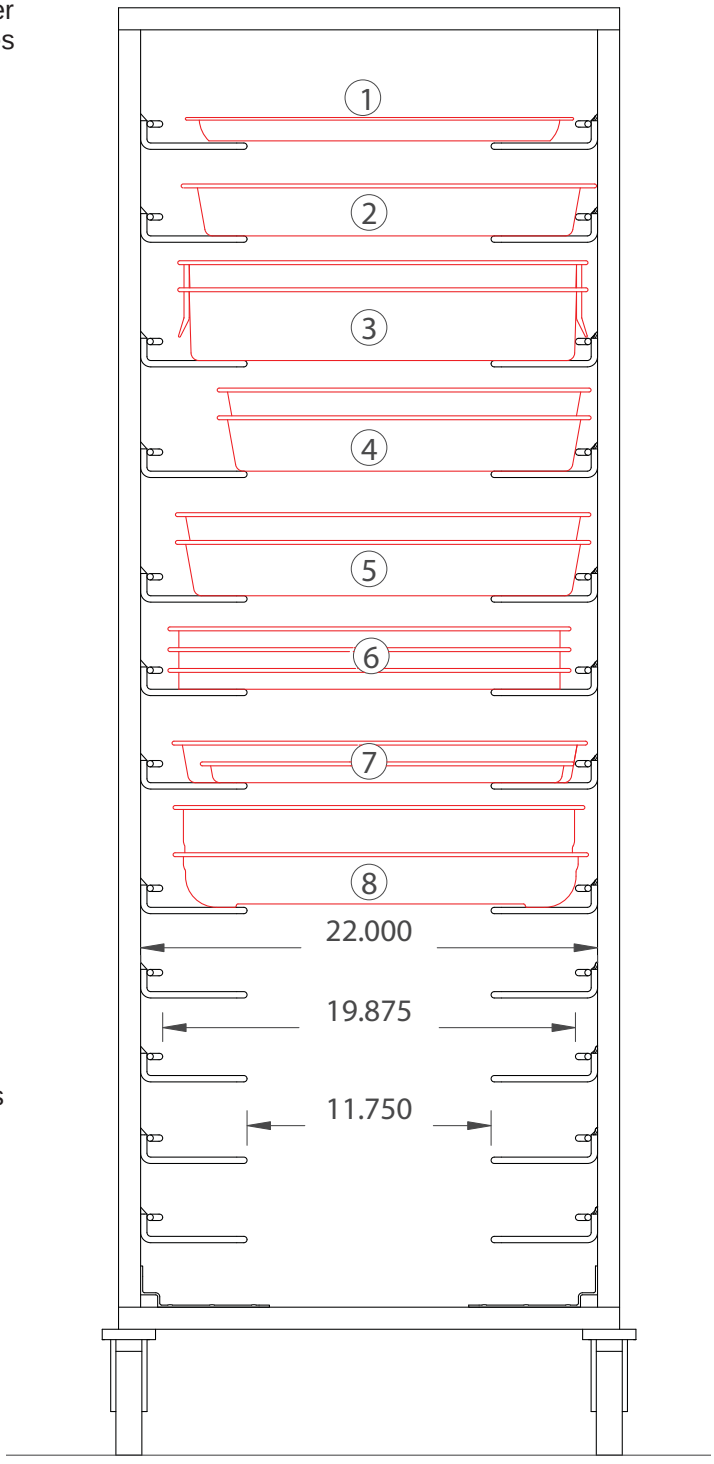

Listed are popular pan sizes in nominal and actual dimensions as identified in the trades:

PANS

Nominal Dimensions	Actual Dimensions
18" x 26"	17-3/4" x 25-3/4"
18" x 24"	17-3/4" x 24"
16" x 22"	16-9/16" x 22-1/2"
15" x 20"	15-1/4" x 20-1/2"
14" x 18"	13-15/16" x 17-13/16"
12" x 16"	12" x 16-3/8"
10" x 14"	10-5/8" x 13-3/4"
9" x 26"	8-3/4" x 25-1/2"
15" x 21" (Canada)	15-1/2" x 21-3/8"

CRES COR®
5925 Heisley Road • Mentor, OH 44060-1833
Phone: 877/CRESCOR • Fax: 440/350-7267
www.crescor.com
© Crescent Metal Products, Inc. 2008 All rights reserved.
Litho in U.S.A.

In line with its policy to continually improve its products, CRES COR reserves the right to change materials and specifications without notice.

STAINLESS STEEL

HAND SINKS

with SOAP and PAPER TOWEL DISPENSER

Conforms To NSF 61/9 Lead Free Requirements

Item #: _____ **Qty #:** _____

Model #: _____

Project #: _____



7-PS-80



7-PS-79

Includes Side supports

Includes Skirt



7-PS-85



7-PS-69

TAPERED BOWL DESIGN

Click Here For Spec sheet!

Electronic Faucet



7-PS-41



Front Loading



7-PS-46

A.D.A. Compliant

FEATURES:

One piece **Deep Drawn** sink bowl design.

"Z" bracket wall mounting plate

Keyhole wall mount bracket.

Stainless steel 1-1/2" IPS basket drain.

C-fold style towel dispenser with hinged towel box.

Specific Unit Features:

7-PS-41:

A.D.A. Compliant

14" x 16" x 5" sink bowl.

K-175 Hands Free AC/DC operated gooseneck faucet.

Deck mount liquid soap dispenser.

Front loading paper towel dispenser.

Stainless Steel Skirt with Removable Access Panel and enclosed bottom for storage.

7-PS-46:

7-PS-41:

14" x 16" x 5" sink bowl.

K-206 6" Extended splash mount gooseneck faucet with wrist handles

Front loading paper towel dispenser.

Deck mount liquid soap dispenser.

Stainless Steel Skirt with Removable Access Panel and enclosed bottom for storage.

7-PS-69:

10" x 14" x 5" sink bowl.

Splash mount liquid Soap Dispenser.

K-69 Heavy Duty Splash Mount Faucet (with Wrist Handles)

Side Support Brackets.

Lever operated drain, built-in overflow with plastic overflow tube and spring clamps.

1 1/2" P-Trap.

7-PS-79:

10" x 14" x 5" sink bowl.

K-59 gooseneck faucet.

Splash mount liquid Soap Dispenser.

7-PS-80:

10" x 14" x 5" sink bowl.

K-59 gooseneck faucet.

Splash mount liquid Soap Dispenser

Includes lever operated drain, built-in overflow with plastic overflow tube and spring clamps.

1 1/2" P-Trap.

7-PS-85

10" x 14" x 5" sink bowl.

K-59 gooseneck faucet.

Splash mount liquid Soap Dispenser.

Chrome plated 1 1/2" P-Trap & apron.

CONSTRUCTION:

All TIG welded.

All sink bowls have a large liberal radii with a minimum dimension of 2" and are rectangular in design for increased capacity.

Welded areas blended to match adjacent surfaces and to a satin finish.

Die formed Countertop Edge with a No-Drip offset.

MATERIAL:

Heavy gauge type 304 series stainless steel.

Wall mounting bracket is Galvanized and of offset design.

All fittings are brass / chrome plated unless otherwise indicated.

MECHANICAL:

Faucet supply is 1/2" IPS male thread hot and cold.

WARNING: Equipment that includes a faucet may expose you to chemicals, including lead, that are known to the State of California to cause cancer or birth defects or other reproductive harm. For more Info., visit www.p65warnings.ca.gov.

ADVANCE TABCO SMART FABRICATION™ www.advancetabco.com

Customer Service Available To Assist You 1-800-645-3166 8:30 am - 7:00 pm E.S.T.

For Orders & Customer Service:
Email: customer@advancetabco.com or Fax: 631-242-6900

For Smart Fabrication™ Quotes:
Email: smartfab@advancetabco.com or Fax: 631-586-2933

DIMENSIONS and SPECIFICATIONS

TOL Overall: ± .500" Interior: ± .250" **FITTINGS SUPPLIED AS SHOWN** **ALL DIMENSIONS ARE TYPICAL**

7-PS-69

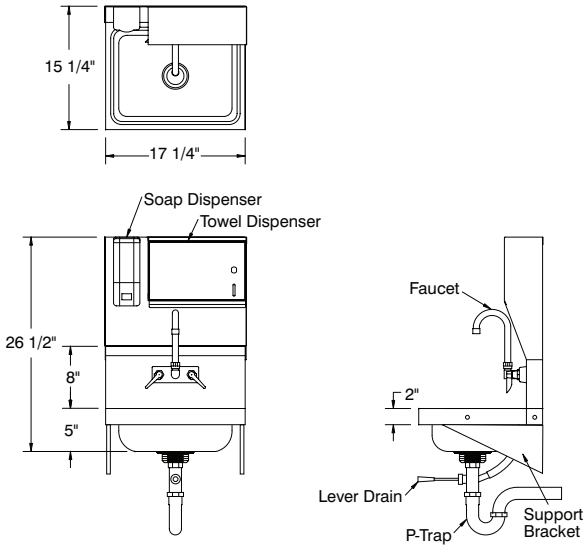

35 lbs.

7-PS-79

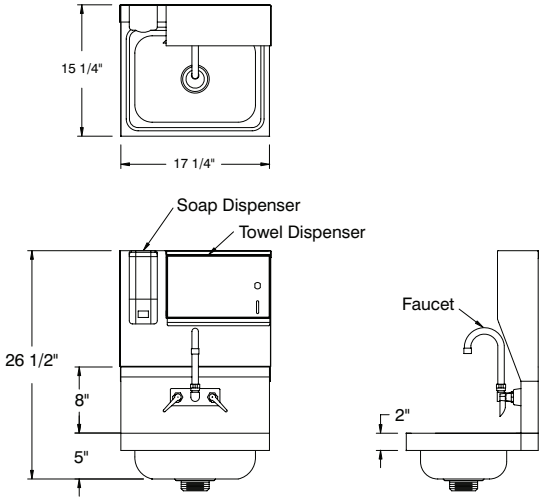

32 lbs.

7-PS-80

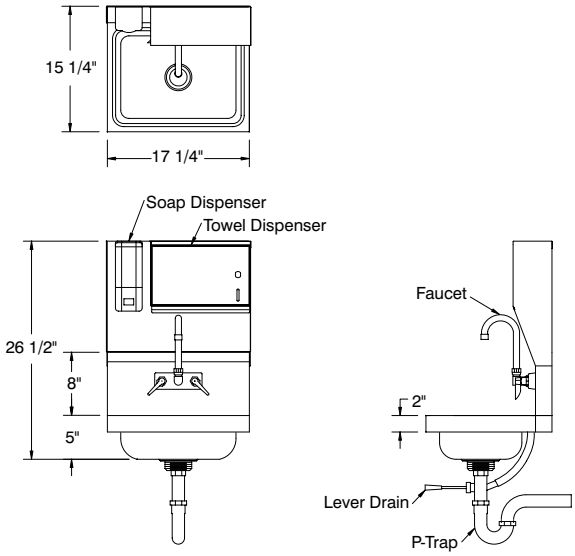

32 lbs.

7-PS-85

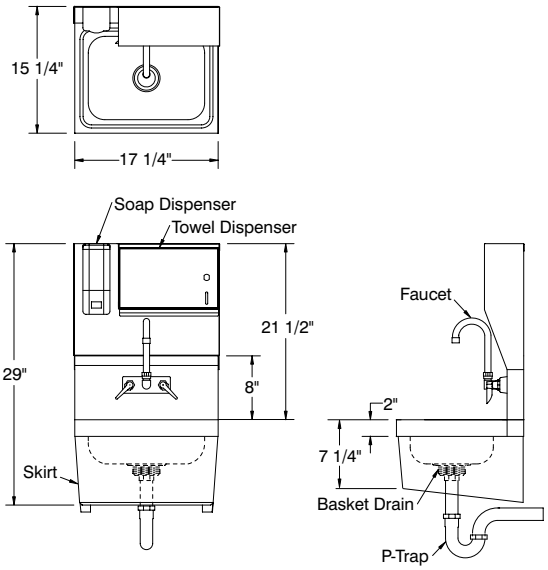

35 lbs.

ADVANCE TABCO is constantly engaged in a program of improving our products. Therefore, we reserve the right to change specifications without prior notice.

© ADVANCE TABCO, JANUARY 2020

16 GAUGE 300 SERIES STAINLESS STEEL

HAND SINK SIDE SPLASHES

WELDED & BOLT-ON

Item #: _____ **Qty #:** _____

Model #: _____

Project #: _____

FEATURES:

Shields surround work area from splashes and prevents cross-contamination.

Available as 7-3/4" and 12" high.

Welded Side Splashes

Available as 7-3/4", 12" & 24" high.

Factory installed only.

Bolt-on Single Panel Side Splash

Available as 7-3/4" and 12" high.

Includes holes only. Hardware not included.

CONSTRUCTION:

Welded Side Splashes (factory installed) are spot welded and polished to a satin finish.

Bolt-on Side Splashes (field installation) require drilling holes in hand sink to match holes in side splash. Mounting hardware is not included.



24" Side Splashes With Included Back Panel Shown
Factory Installed Only



Single Sided 7-3/4" Side Splash Shown
Factory Installed Only



Double Sided Bolt-On 7-3/4" Side Splashes Shown
Hardware Not Included

WELDED

	One Side Splash			Two Side Splashes				
	Model #	Approx. Weight	Approx. Cu. Ft.	Model #	Approx. Weight	Approx. Cu. Ft.	O.A. Splash Size W x H	Description
7-3/4" High Welded Side Splashes	**7-PS-16**	5 lbs.	1	**7-PS-17**	12 lbs.	1	15-1/4" x 9-3/4"	For 10" x 14" Bowls w/ Splash Mt. Faucets
	7-PS-16A	5 lbs.	1	**7-PS-17A**	12 lbs.	1	16-1/8" x 9-3/4"	For 9" x 9" Bowls
	7-PS-16B	5 lbs.	1	**7-PS-17B**	13 lbs.	1	17-1/8" x 9-3/4"	For 10" x 14" Bowls w/ Deck Mt. Faucets
	7-PS-16C	7 lbs.	1	**7-PS-17C**	15 lbs.	1	21-3/4" x 9-3/4"	For 16" x 20" Bowls
	7-PS-16D	8 lbs.	1	**7-PS-17D**	16 lbs.	1	23-3/8" x 9-3/4"	For Handicapped Hand Sinks
	7-PS-16E	6 lbs.	1	**7-PS-17E**	14 lbs.	1	19-5/8" x 9-3/4"	For 14" (F/B) x 16" Bowls
	7-PS-16F	6 lbs.	1	**7-PS-17F**	14 lbs.	1	21-1/8" x 9-3/4"	For 16" (F/B) x 14" Bowls
12" High Welded Side Splashes	**7-PS-11**	6 lbs.	1	**7-PS-15**	14 lbs.	1	15-1/4" x 14"	For 10" x 14" Bowls w/ Splash Mt. Faucets
	7-PS-11A	6 lbs.	1	**7-PS-15A**	14 lbs.	1	16-1/8" x 14"	For 9" x 9" Bowls
	7-PS-11B	6 lbs.	1	**7-PS-15B**	14 lbs.	1	17-1/8" x 14"	For 10" x 14" Bowls w/ Deck Mt. Faucets
	7-PS-11C	8 lbs.	1	**7-PS-15C**	18 lbs.	1	21-3/4" x 14"	For 16" x 20" Bowls
	7-PS-11D	9 lbs.	1	**7-PS-15D**	20 lbs.	1	23-3/8" x 14"	For Handicapped Hand Sinks
	7-PS-11E	7 lbs.	1	**7-PS-15E**	16 lbs.	1	19-5/8" x 14"	For 14" (F/B) x 16" Bowls
	7-PS-11F	8 lbs.	1	**7-PS-15F**	18 lbs.	1	21-1/8" x 14"	For 16" (F/B) x 14" Bowls
24" High Welded Side Splashes	**NOTE:** 24" High Side Splashes Include A Rear Panel That Matches The Height Of The Side Panels. (Only Available As Two Side Design, Single Side Not Offered)			**7-PS-28**	28 lbs.	1	15-1/4" x 26"	For 10" x 14" Bowls w/ Splash Mt. Faucets
				7-PS-28A	28 lbs.	1	16-1/8" x 26"	For 9" x 9" Bowls
				7-PS-28B	28 lbs.	1	17-1/8" x 26"	For 10" x 14" Bowls w/ Deck Mt. Faucets
				7-PS-28C	36 lbs.	1	21-3/4" x 26"	For 16" x 20" Bowls
				7-PS-28D	40 lbs.	1	23-3/8" x 26"	For Handicapped Hand Sinks
				7-PS-28E	32 lbs.	1	19-5/8" x 26"	For 14" (F/B) x 16" Bowls
				7-PS-28F	36 lbs.	1	21-1/8" x 26"	For 16" (F/B) x 14" Bowls

BOLT-ON Hardware Not Included

7-3/4" High				12" High				
Model #	O.A. Splash Size W x H	Approx. Weight	Approx. Cu. Ft.	Model #	O.A. Splash Size W x H	Approx. Weight	Approx. Cu. Ft.	Description
7-PS-27	15-1/4" x 10"	5 lbs.	1	**7-PS-13**	15-1/4" x 14"	6 lbs.	1	For 10" x 14" Bowls w/ Splash Mt. Faucets
7-PS-27A	16-1/8" x 10"	6 lbs.	1	**7-PS-13A**	16-1/8" x 14"	7 lbs.	1	For 9" x 9" Bowls
7-PS-27B	17-1/8" x 10"	6 lbs.	1	**7-PS-13B**	17-1/8" x 14"	7 lbs.	1	For 10" x 14" Bowls w/ Deck Mt. Faucets
7-PS-27C	21-3/4" x 10"	6 lbs.	1	**7-PS-13C**	21-3/4" x 14"	7 lbs.	1	For 16" x 20" Bowls
7-PS-27D	23-3/8" x 10"	7 lbs.	1	**7-PS-13D**	23-3/8" x 14"	8 lbs.	1	For Handicapped Hand Sinks
7-PS-27E	19-5/8" x 10"	7 lbs.	1	**7-PS-13E**	19-5/8" x 14"	8 lbs.	1	For 14" (F/B) x 16" Bowls
7-PS-27F	21-1/8" x 10"	7 lbs.	1	**7-PS-13F**	21-1/8" x 14"	8 lbs.	1	For 16" (F/B) x 14" Bowls

ADVANCE TABCO SMART FABRICATION™
www.advancetabco.com

Customer Service Available To Assist You 1-800-645-3166 8:30 am - 7:00 pm E.S.T.

For Orders & Customer Service:
Email: customer@advancetabco.com or Fax: 631-242-6900

For Smart Fabrication™ Quotes:
Email: smartfab@advancetabco.com or Fax: 631-586-2933

DIMENSIONS and SPECIFICATIONS

TOL ± .500" ALL DIMENSIONS ARE TYPICAL

BOLT-ON SIDE SPLASHES (Hardware Not Included)

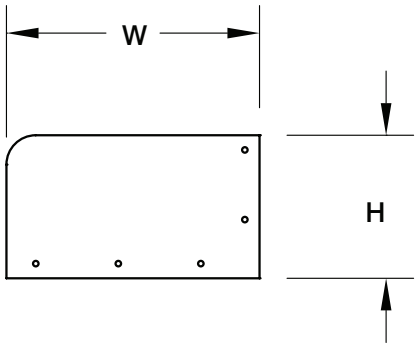

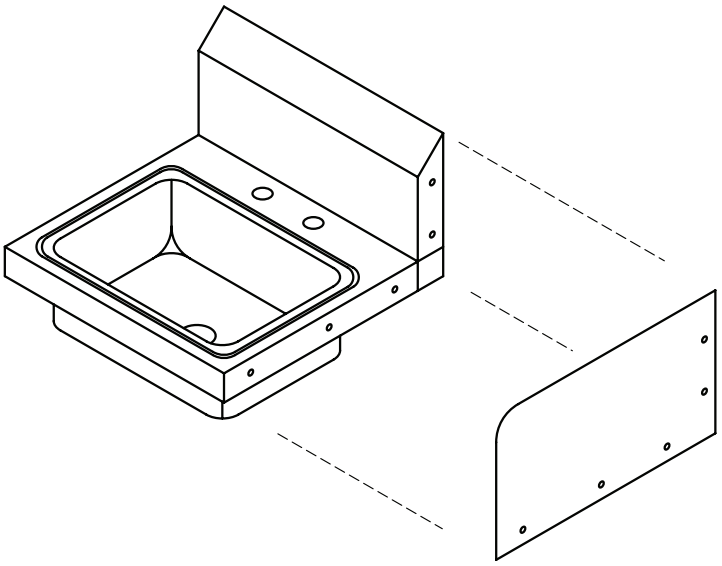

WELDED SIDE SPLASHES (Factory Installed Only)

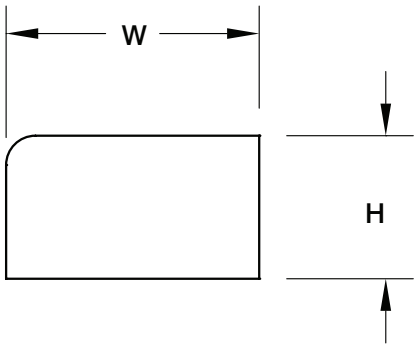

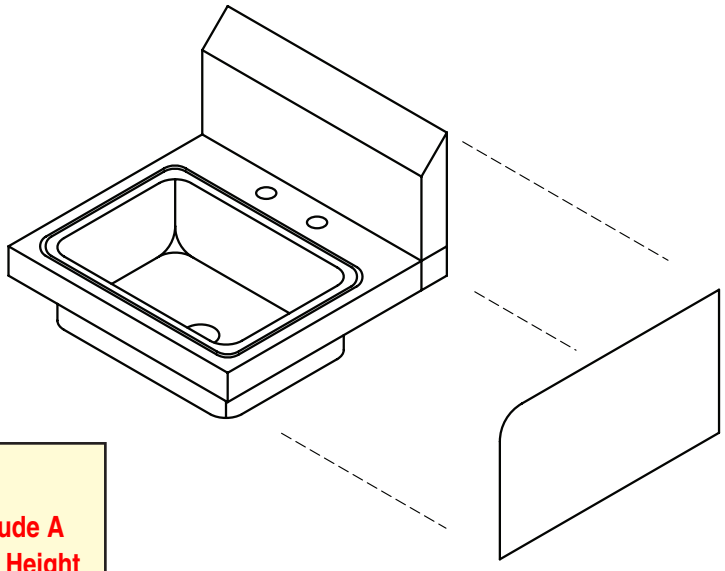

NOTE:

24" High Side Splashes Include A Rear Panel That Matches The Height Of The Side Panels And Is To Be Secured To The Rear Wall.

Rear Panel Mounting Holes Are Provided. (Hardware Not Included).

ADVANCE TABCO is constantly engaged in a program of improving our products. Therefore, we reserve the right to change specifications without prior notice.

© ADVANCE TABCO, APRIL 2020

T&S BRASS AND BRONZE WORKS, INC.
2 Saddleback Cove / P.O. Box 1088
Travelers Rest, SC 29690

Travelers Rest, SC: 800-476-4103 • Simi Valley, CA: 800-423-0150 • Fax: 864-834-3518 • www.tsbrass.com

Model No.
B-3952-01

Item No.

This Space for Architect/Engineer Approval

Job Name_____Date_____

Model Specified_____ Quantity_____

Customer/Wholesaler_____

Contractor_____

Architect/Engineer_____

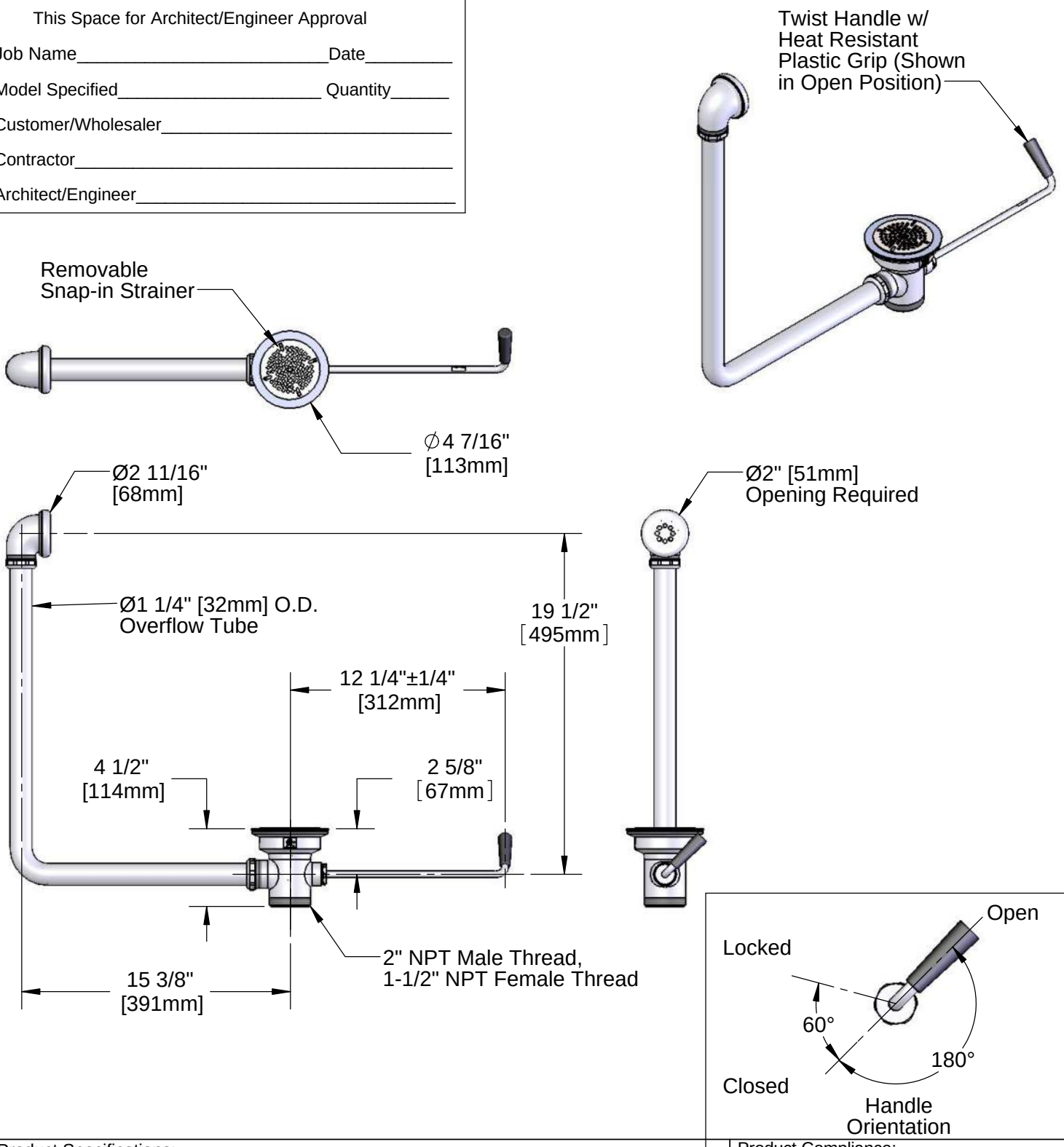

Product Specifications:
Rotary Waste Drain Valve w/ Twist Handle, 3 1/2" Sink Opening, 2" Male NPT / 1-1/2" Female NPT Outlet & Overflow Tube & Head

Product Compliance:
ASME A112.18.2 / CSA B125.2

Drawn:	KJG	Checked:	JRM	Approved:	JHB	Date:	08/28/14	Scale:	1:8	Sheet:	1 of 2

T&S BRASS AND BRONZE WORKS, INC.
2 Saddleback Cove / P.O. Box 1088
Travelers Rest, SC 29690

Travelers Rest, SC: 800-476-4103 • Simi Valley, CA: 800-423-0150 • Fax: 864-834-3518 • www.tsbrass.com

Model No. **B-3952-01**

Item No.

ITEM	SALE NO.	DESCRIPTION
1	010389-45	O-Ring, Plunger
2	010390-45	Ferrule, Coupling Nut
3	010391-45	Nut, Coupling for Twist Drain
4	010382-45	Gasket, 3 1/2" Face Flange
5	010384-45	Flange, 3 1/2" Face
6	010386-45	Strainer, 3 1/2" Snap-in Removable
7	010388-45	Plunger, Lever and Twist Drain
8	010393-45	Handle, Rotary Waste Valve Twist
9	011355-45	Tube, Overflow Elbow
10	011356-45	Head, Overflow Tube



Washers, O-Rings & Gaskets are included in Parts Kit B-39K

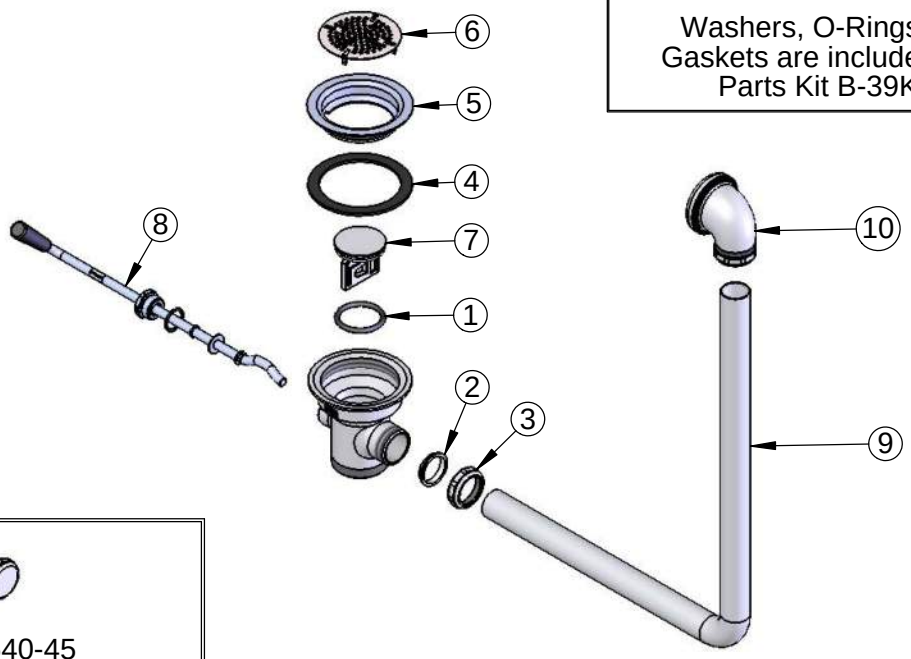



012640-45
Waste Drain Overflow Cap w/ Sealing Washer (Included)

Product Specifications:
Rotary Waste Drain Valve w/ Twist Handle, 3 1/2" Sink Opening, 2" Male NPT / 1-1/2" Female NPT Outlet & Overflow Tube & Head

Product Compliance:
ASME A112.18.2 / CSA B125.2

Drawn:	Checked:	Approved:	Date:	Scale:	Sheet:
KJG	JRM	JHB	08/28/14	NTS	2 of 2

T&S BRASS AND BRONZE WORKS, INC.
2 Saddleback Cove / P.O. Box 1088
Travelers Rest, SC 29690

Travelers Rest, SC: 800-476-4103 • Simi Valley, CA: 800-423-0150 • Fax: 864-834-3518 • www.tsbrass.com

Model No.
B-0231
Item No.

ADA Compliant

This Space for Architect/Engineer Approval

Job Name_____Date_____

Model Specified_____ Quantity_____

Customer/Wholesaler_____

Contractor_____

Architect/Engineer_____

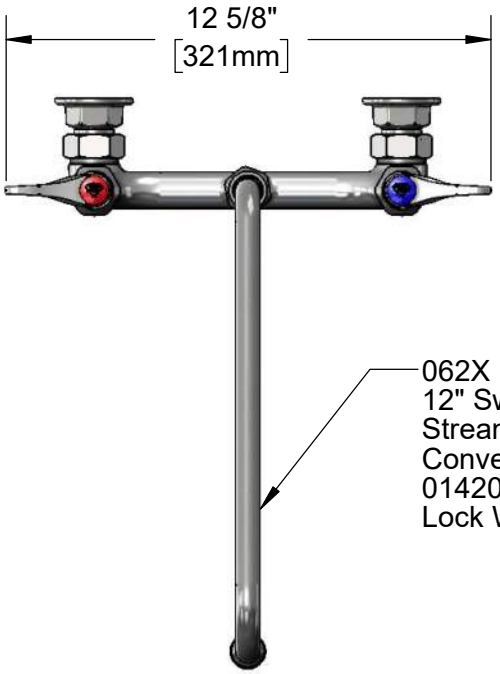



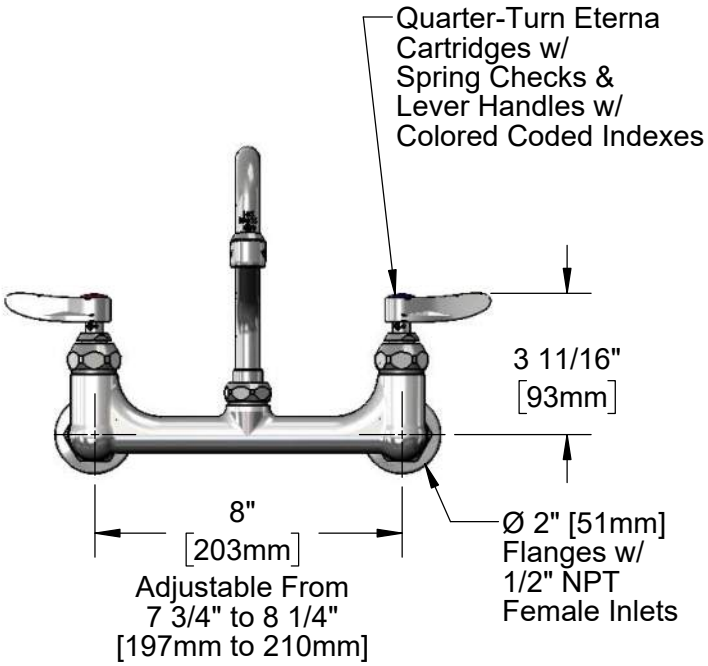

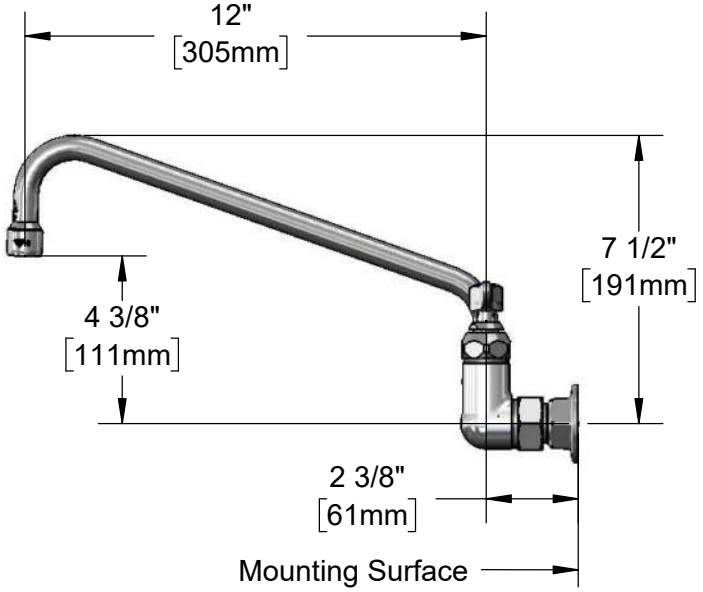

Product Specifications:
8" Wall Mount Mixing Faucet w/ Quarter-Turn Eterna Cartridges w/ Spring Checks, Lever Handles, 12" Swing Nozzle & 1/2" NPT Female Inlets

Product Compliance:
ASME A112.18.1 / CSA B125.1
NSF 61 - Section 9
NSF 372 (Low Lead Content)
ANSI A117.1 (ADA)

Drawn: MRC	Checked: JRM	Approved: JHB	Date: 01/22/18	Scale: 1:5	Sheet: 1 of 2

T&S BRASS AND BRONZE WORKS, INC.
2 Saddleback Cove / P.O. Box 1088
Travelers Rest, SC 29690

Travelers Rest, SC: 800-476-4103 • Simi Valley, CA: 800-423-0150 • Fax: 864-834-3518 • www.tsbrass.com

Model No. **B-0231**

Item No.

ITEM NO.	SALES NO.	DESCRIPTION
1	B-PT	Full Flow Stream Regulator, 55/64-27
2	062X	12" Swing Nozzle
3	009538-45	Swivel Washer
4	011429-45	Swivel Sleeves (2)
5	001074-45	O-Ring
6	014200-45	Star Washer, Anti-Rotation
7	002711-40NS	Quarter-Turn Eterna Cartridge w/ Spring Check, Handle, Blue Index & Screw, LTC
8	001019-45	Coupling Nut Washer
9	00AA	1/2" NPT Female Eccentric Flange
10	012442-40NS	Quarter-Turn Eterna Cartridge w/ Spring Check, LTC
11	001638-45NS	Lever Handle (New Style)
12	000925-45	Lab Handle Screw
13	018506-19NS	Blue Button Index, Press-in
14	002712-40NS	Quarter-Turn Eterna Cartridge w/ Spring Check, Handle, Red Index & Screw, RTC
15	012443-40NS	Quarter-Turn Eterna Cartridge w/ Spring Check, RTC
16	001193-19NS	Red Button Index, Press-in

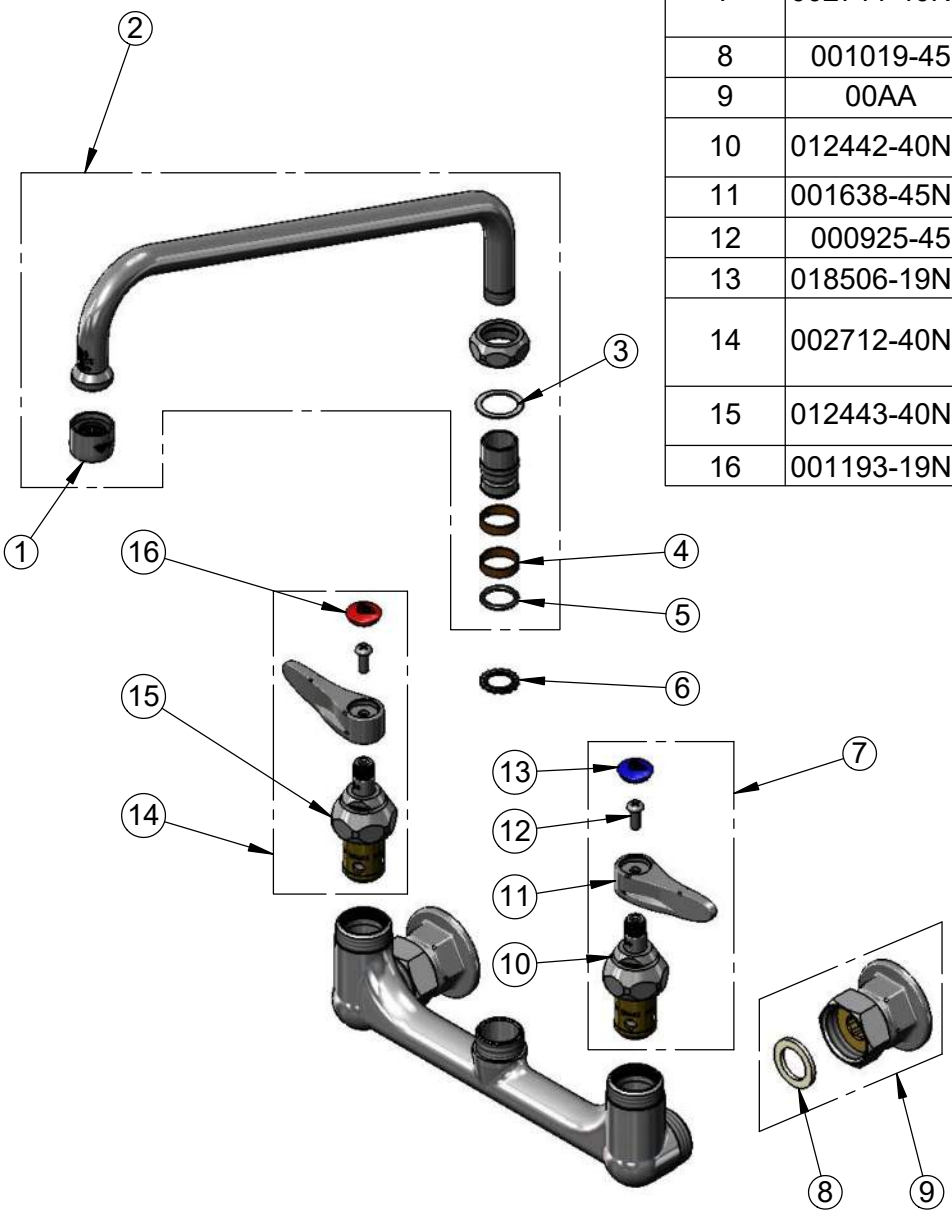

Product Specifications:
8" Wall Mount Mixing Faucet w/ Quarter-Turn Eterna Cartridges w/ Spring Checks, Lever Handles, 12" Swing Nozzle & 1/2" NPT Female Inlets

Product Compliance:
ASME A112.18.1 / CSA B125.1
NSF 61 - Section 9
NSF 372 (Low Lead Content)
ANSI A117.1 (ADA)

Drawn:	Checked:	Approved:	Date:	Scale:	Sheet: 2 of 2
MRC	JRM	JHB	01/22/18	NTS	

T&S BRASS AND BRONZE WORKS, INC.
2 Saddleback Cove / P.O. Box 1088
Travelers Rest, SC 29690

Travelers Rest, SC: 800-476-4103 • Simi Valley, CA: 800-423-0150 • Fax: 864-834-3518 • www.tsbrass.com

Model No.
B-WH4

Item No.

This Space for Architect/Engineer Approval

Job Name_____Date_____

Model Specified_____ Quantity_____

Customer/Wholesaler_____

Contractor_____

Architect/Engineer_____

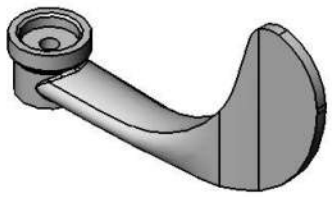

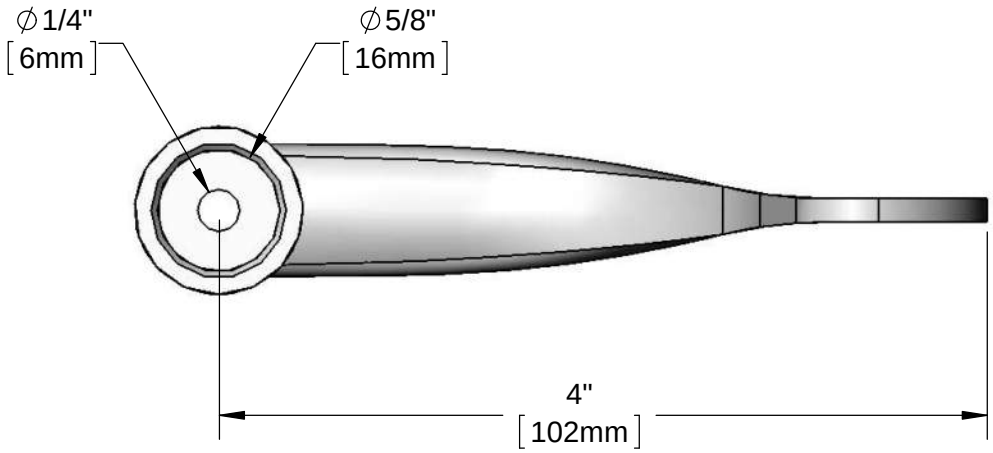

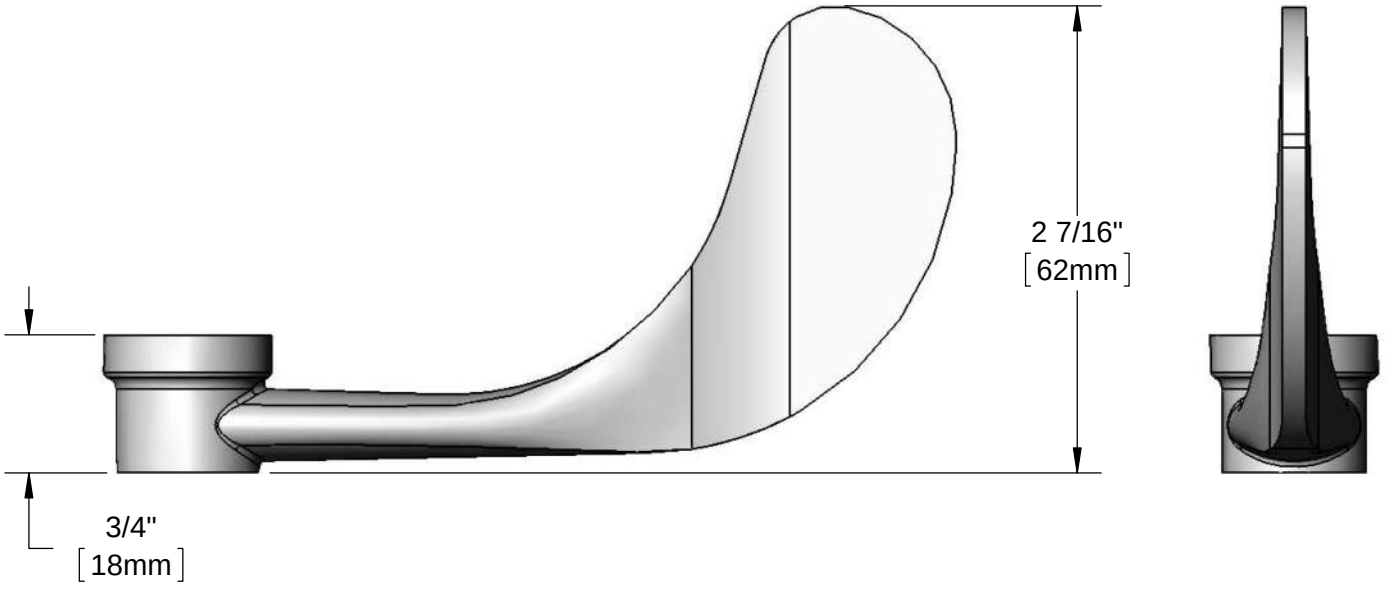

Product Specifications:
4" Wrist Action Handle
(Polish Chrome)

Drawn	Checked	Approved
DHL	DMH	JHB
Scale: 1:1		Date: 08/29/12

Sheet: 1 of 1

T&S BRASS AND BRONZE WORKS, INC.
2 Saddleback Cove / P.O. Box 1088
Travelers Rest, SC 29690

Travelers Rest, SC: 800-476-4103 • Simi Valley, CA: 800-423-0150 • Fax: 864-834-3518 • www.tsbrass.com

Model No.
B-0199-01

Item No.

This Space for Architect/Engineer Approval

Job Name_____Date_____

Model Specified_____ Quantity_____

Customer/Wholesaler_____

Contractor_____

Architect/Engineer_____



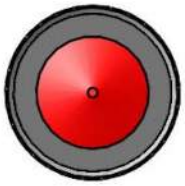

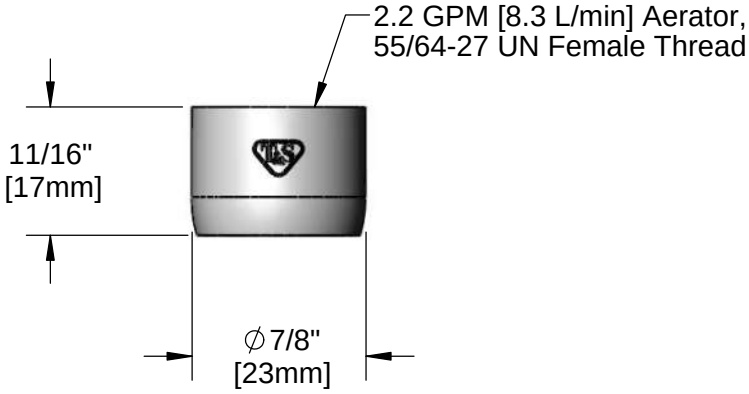

Product Specifications:
Aerator, 2.2 GPM [8.3 L/min] w/ 55/64-27 UN Female Thread

Product Compliance:

ASME A112.18.1 / CSA B125.1
NSF 61 - Section 9
NSF 372 (Low Lead Content)

Drawn: DHL	Checked: JRM	Approved: JHB	Date: 03/26/15	Scale: 1:1	Sheet: 1 of 1

T&S BRASS AND BRONZE WORKS, INC.
2 Saddleback Cove / P.O. Box 1088
Travelers Rest, SC 29690

Travelers Rest, SC: 800-476-4103 • Simi Valley, CA: 800-423-0150 • Fax: 864-834-3518 • www.tsbrass.com

Model No.
B-0230-K

Item No.

This Space for Architect/Engineer Approval

Job Name_____Date_____

Model Specified_____ Quantity_____

Customer/Wholesaler_____

Contractor_____

Architect/Engineer_____

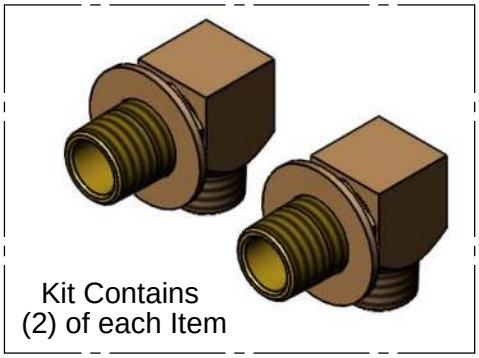

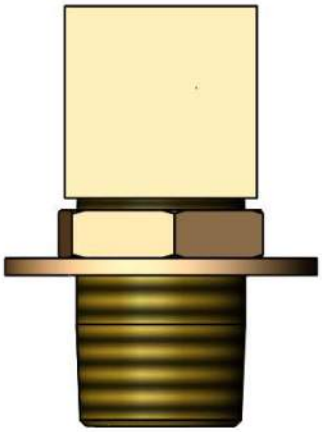

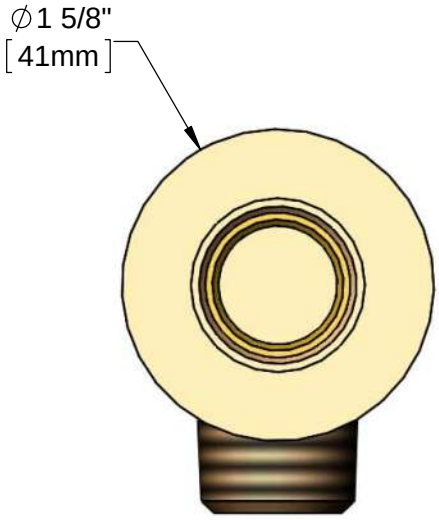

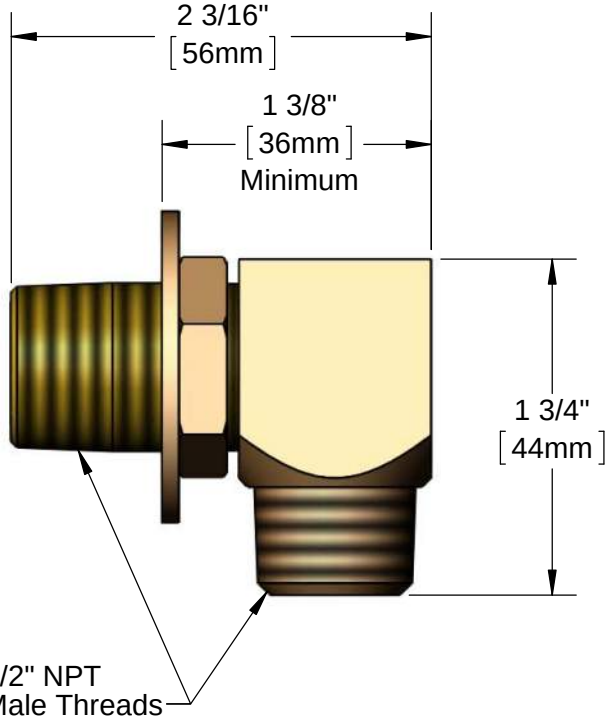

Product Specifications:
1/2" NPT Male Elbow Kit w/ Lock Nut & Washer

Product Compliance:

ASME A112.18.1 / CSA B125.1
NSF 61 - Section 9
NSF 372 (Low Lead Content)

Drawn:	DHL	Checked:	JRM	Approved:	JHB	Date:	03/13/14	Scale:	1:1	Sheet: 1 of 2

T&S BRASS AND BRONZE WORKS, INC.
2 Saddleback Cove / P.O. Box 1088
Travelers Rest, SC 29690

Travelers Rest, SC: 800-476-4103 • Simi Valley, CA: 800-423-0150 • Fax: 864-834-3518 • www.tsbrass.com

Model No.
B-0230-K

Item No.

ITEM NO.	SALES NO.	DESCRIPTION
1	000999-45	Brass Lock Washer
2	002954-45	Shank Lock Nut
3	013357-20	1/2" NPT x 1-5/8" Lg. Close Nipple

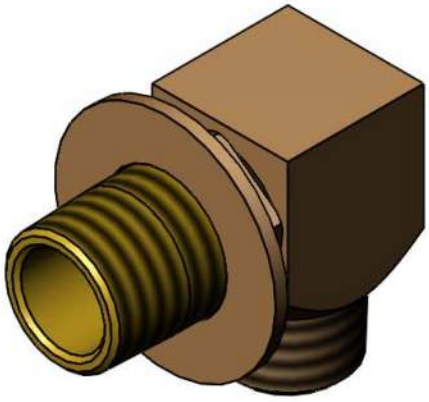

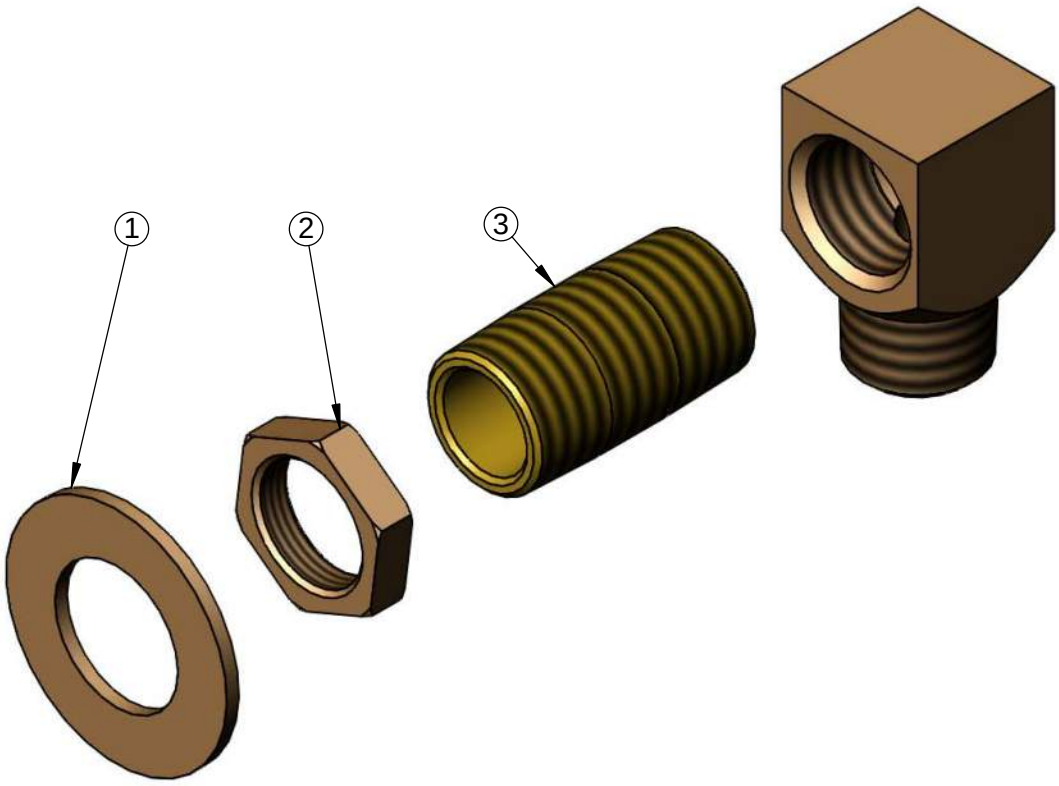

Product Specifications:
1/2" NPT Male Elbow Kit w/ Lock Nut & Washer

Product Compliance:

ASME A112.18.1 / CSA B125.1
NSF 61 - Section 9
NSF 372 (Low Lead Content)

Drawn:	DHL	Checked:	JRM	Approved:	JHB	Date:	03/13/14	Scale:	NTS	Sheet: 2 of 2

G.A. SYSTEMS, Inc.

SPECIALIZING IN CAFETERIA SERVING LINES

SPEC SHEET

Cashier Stand ADA



PROJECT: _____

ITEM #: _____

MODEL: _____

Specifications

Top is 16 gauge 304 stainless steel #4 finish. Front and back edges are turned down 102° and turned back 90° eliminating the gap between the top and the base of the cabinet. The ends are turned down 90° flush with cabinet base, this eliminates any open space between G.A. Systems cabinets. The top is secured to the base with 4 stainless steel flush head screws. One 3/4" diameter pin is welded at one end of the top. The pin has two 5/16" diameter holes. The lower hole is used to join adjacent G.A. Systems cabinets.

Body of cabinet is fabricated of 1" square 18 gauge stainless steel and cold rolled tubing to form the top and bottom frames. Each is welded to 1-1/2" square 18 gauge stainless steel corner posts. Each corner post is capped. All joints are welded with all exposed welds being ground and polished. 20 gauge galvanized body panels are welded to tubing super structure.

Exterior front, back and one end are trimmed with 22 gauge stainless steel #4 finish trim to accept laminated color panels. Laminate is applied to 1/8" board for additional strength.

There is a 3-3/4" clearance from the bottom of the cabinet to the floor. Plate type 3" swivel non-marking casters with brakes. Cabinet heights are ADA compliant.

Standard Features

- ☐ Locking pin, 1
- ☐ 1-3/4" grommet on top
- ☐ Plate type 3" swivel non-marking casters with brakes

Options

- ☐ No Pin
- ☐ No Grommet
- ☐ Solid Surface Top (in lieu of stainless steel top)

Accessories

- ☐ Tray Slide Stainless Steel 8-5/8" / C0108
- ☐ Tray Slide Stainless Steel 12" / C1017
- ☐ Tray Slide Stainless Steel 7" / C0294
- ☐ Tray Slide Solid Surface 8-5/8" / C0857
- ☐ Condiment Insert / C0139
- ☐ Toe Kicks
- ☐ Overshelf (stainless steel)
- ☐ Counter display Rack / C0392
- ☐ Premium High Pressure Laminate
- ☐ Graphics Panels Stand-offs
- ☐ Graphic Vinyl Decals



Condiment Top Insert
Holds 4 - 1/4 Size Pan

Intertek
4003279
Conforms to NSF Std. #2

Rev 04/2019

G.A. SYSTEMS, Inc.

SPECIALIZING IN CAFETERIA SERVING LINES

Cashier Stand ADA

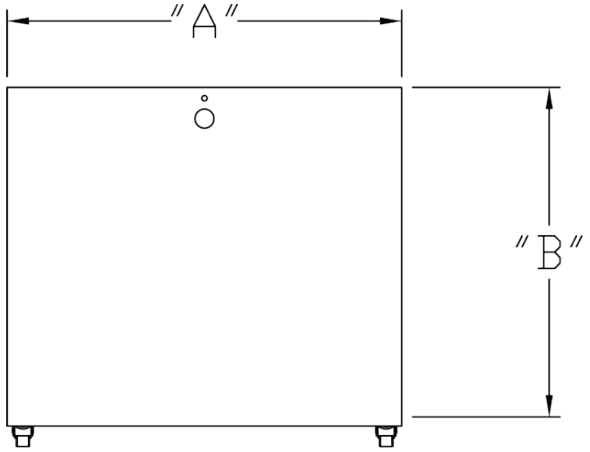

TOP VIEW

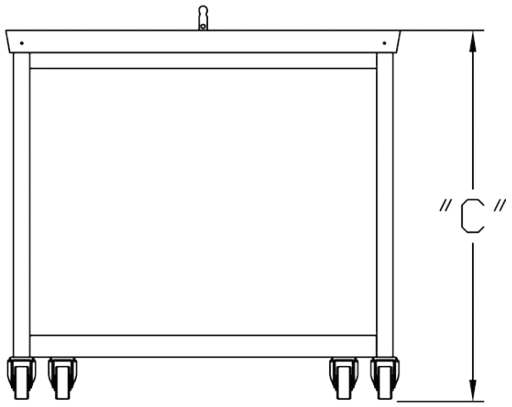

END VIEW

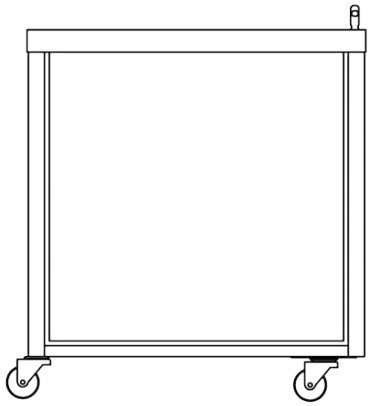

BACK VIEW

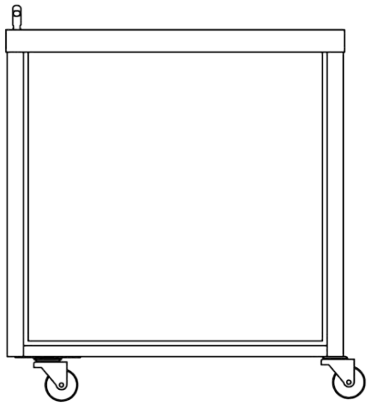

FRONT VIEW

Dimensions

ITEM	MODEL	LENGTH	WIDTH	HEIGHT
C0180	D3136A	31-3/8"	36-3/8"	34"

Rev 04/2019

G.A. SYSTEMS, Inc.

SPECIALIZING IN CAFETERIA SERVING LINES

Limited Warranty

G.A. Systems, Inc. warrants to the original purchase all equipment manufactured and/or sold to be free from all defects in material and workmanship under normal use and service. Its obligations under this warranty shall be limited to repairing or replacing any part of the said product. F.O.B. factory, which proves thus defective within one (1) year from date of sale, and which upon G.A. Systems, Inc.'s examination, discloses to its satisfaction to be thus defective. No claims will be accepted for any part becoming defective from damage in transit, improper installation, misuse, neglect, abnormal use, alteration, accident, fire or other casualty, or act of God. We will not assume any responsibility for labor chargers, travel, refrigerant, replacement parts purchased, or other expenses incurred outside of our factory. Neither will we be liable for food spoilage, loss of use of the equipment, inconvenience, or other consequential damage of any kind.

Rev 08/2019

BEVERAGE-AIR

Project: _____	AIA#
Item: _____	
Location: _____	SIS#
Approved:	

SCHOOL MILK FORCED AIR COOLER

STF58HC Dual Access Cooler

Hydrocarbon Series

MODEL: STF58HC-1-S



3 Year Parts/Labor Warranty

Additional 4 Year Compressor Warranty

CABINET CONSTRUCTION

- Stainless steel exterior and interior
- Stainless steel lids, hinged doors and door latches
- Full electronic control
- Dual sided access
- Heavy-duty epoxy coated steel wire floor racks standard
- Floor drain is centrally located for easy cleaning and connecting to drain hose with hose adapter
- Flexible compression door gaskets, ensures a tight seal
- Self-latching doors/lids with safety bumpers
- Exterior thermometer
- Cylinder locks
- 5” Heavy-duty plate casters (2 with locks)
- Balanced, forced-air refrigeration system provides rapid chilling of product

OPTIONS & ACCESSORIES

- Corner bumpers
- Cafeteria tray slides
- Graphics

REFRIGERATION SYSTEM

- Uses environmentally friendly, energy efficient R290 refrigerant, and meets all regulatory requirements for CARB, SNAP, DOE & more
- Maintains product temperature between 36ºF- 40ºF

STF58HC DUAL ACCESS, FORCED AIR: SCHOOL MILK SERIES

Please verify qualifying units by visiting: www.energystar.gov/cfs

3779 Champion Blvd., Winston-Salem, NC 27105
1-888-845-9800 Fax: 1-336-245-6453
Beverage-Air.com Sales@bevair.com

BEVERAGE-AIR

School Milk Cooler - Dual Access
Model: STF58HC-1-S

MODEL	STF58HC-1-S
EXTERNAL DIMENSIONAL DATA	
Width Overall	58”
Depth Overall	34”
Height Overall with Casters	47 ¾”
Number of Lids/Doors	Dual Access
Both Lids Extended	64”
INTERNAL DIMENSIONAL DATA	
NET Capacity (cubic ft.)	24.3
Internal Width Overall (in)	55”
Internal Depth Overall (in)	30”
Internal Height Overall (in)	24 ⅝”
CASE CAPACITY	
13” X 13” X 11”	16
19” X 13” X 11”	10
ELECTRICAL DATA	
Full Load Amperes	2.46
REFRIGERATION DATA	
Horsepower	1/4
Capacity (BTU/Hr)	1851
Heat Rejection (BTU/Hr)	2776.5
Charge (lbs/grams)	0.154/70
SHIPPING DATA	
Gross Weight - Crated	496 lbs
Height - Crated	54”
Width - Crated	63”
Depth - Crated	38”

Model Views

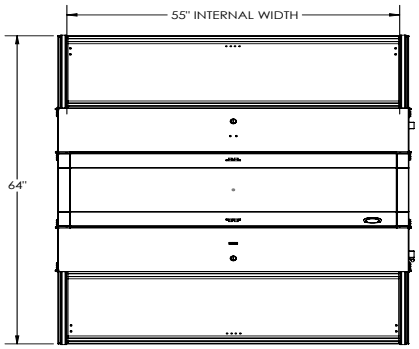

PLAN VIEW

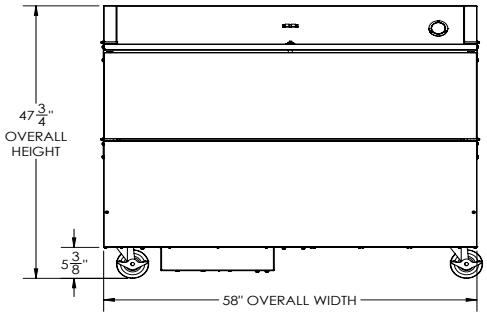

ELEVATION VIEW

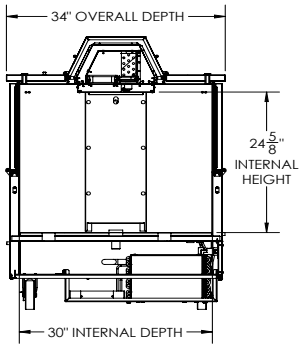

SIDE VIEW

ELECTRICAL CONNECTION



115/60/1
NEMA 5-15P

Units pre-wired at factory and include 8’ long cord and plug set.

Your Solutions Partner

Specifications

F.O.B. Sedalia, Missouri 65301



TST-46

Approval Stamp(s):

PRODUCT INFORMATION:
PROJECT: _____
ITEM: _____
QUANTITY: _____

MODEL:
Thurmaduke Serving Systems
Solid Top Units

- ❑ **TST-18** 18" length units
- ❑ **TST-32** 32" length units
- ❑ **TST-46** 46" length units
- ❑ **TST-60** 60" length units
- ❑ **TST-74** 74" length units
- ❑ **TST-88** 88" length units

TOP:

- ■ 16 gauge, 300 Series stainless steel
- ■ Sound-deadening

BODY:

- ❑ Choice of (12) powder coat paint colors
- ❑ Stainless steel body
- ■ NSF approved 5" diameter polyurethane casters
- ■ Operator's side open to bottom shelf
- ■ 7" high stainless steel rail on operator's side
- ■ End and side opposite operator fully enclosed
- ■ Intermediate and bottom shelves to match body

OPTIONS:

- ❑ 14 gauge tops
- ❑ Internal Locking device
- ❑ Pass-Thru construction
- ❑ Foodshields
- ❑ Workshelves
- ❑ Trayslides
- ❑ Special length not listed
- ❑ Recessed top (to accommodate griddles, fryers, etc.)
- ❑ 6" Stainless steel legs
- ❑ Veneered plastic laminate panels on body
- ❑ Powder coat paint colors
- ❑ Kickplates s/s or p/g

Agency Listings:

NSF

THURMADUKE SERVING SYSTEMS - SOLID TOP UNITS

Catalog No. TSS-SOLID

A.I.A. File No. 35-C-13

DUKE MANUFACTURING CO.
2305 N. Broadway
St. Louis, MO 63102
800.735.3853 Toll Free
314.231.5074 Fax
www.dukemfg.com

Specification subject to change

WARNING: Cancer and Reproductive Harm - www.p65warnings.ca.gov

THURMADUKE SERVING SYSTEMS SOLID TOP UNITS

A.I.A. File No. 35-C-13

Catalog No. TSS-SOLID

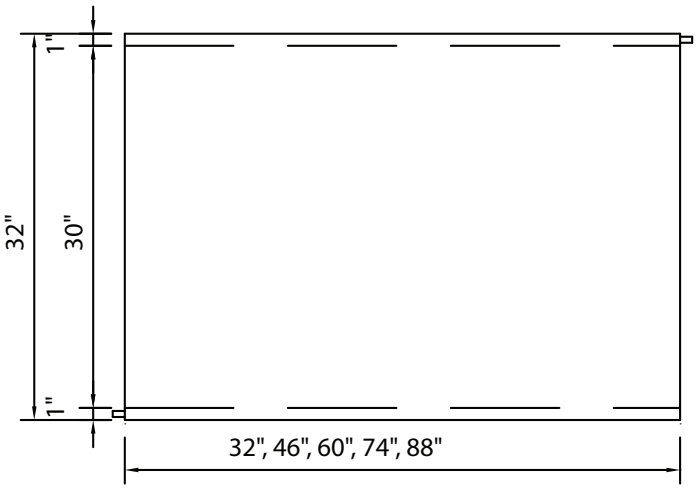

TOP VIEW

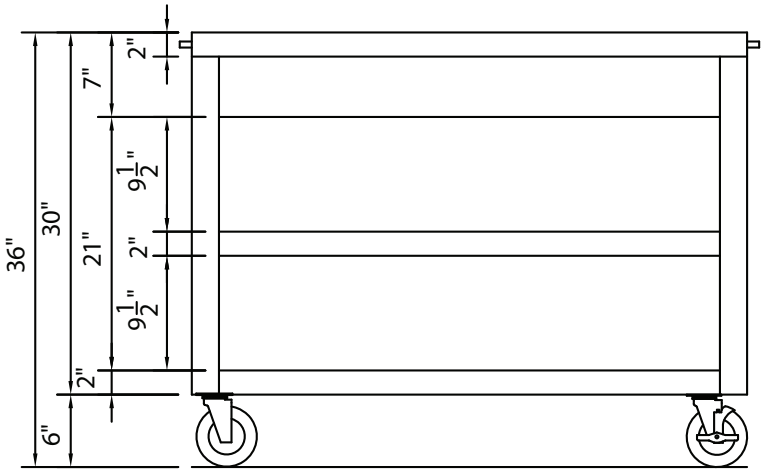

FRONT VIEW

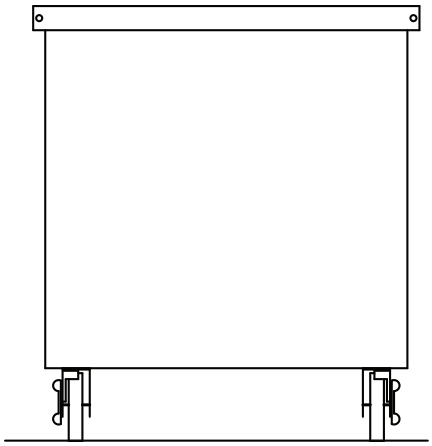

RIGHT SIDE VIEW

DIMENSIONS:

Freight Class: 150

Model	Length		Width		Height		Cube ft. crated	Weight	
	in	cm	in	cm	in	cm		lbs	kg
TST-18	18	45.7	32	81.3	36	91.4	22.0	200	90.9
TST-32	32	81.3	32	81.3	36	91.4	34.8	215	97.7
TST-46	46	116.8	32	81.3	36	91.4	47.7	314	142.7
TST-60	60	152.4	32	81.3	36	91.4	60.5	380	172.7
TST-74	74	188.0	32	81.3	36	91.4	73.3	446	202.7
TST-88	88	223.5	32	81.3	36	91.4	86.2	480	218.2

THURMADUKE SERVING SYSTEMS - SOLID TOP UNITS

Your Solutions Partner

Duke Manufacturing Co.
2305 N. Broadway
St. Louis, MO 63102

Phone: 314-231-1130
Toll Free: 1-800-735-3853
Fax: 314-231-5074

www.dukemfg.com

Printed in U.S.A
© 2020, Duke Manufacturing Co.

Specifications

F.O.B. Sedalia, Missouri 65301

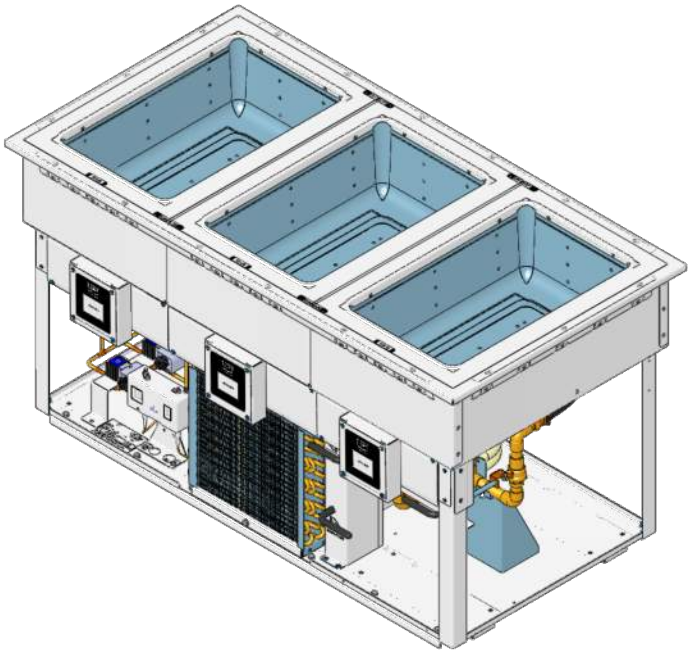

Model HCF-3 Shown

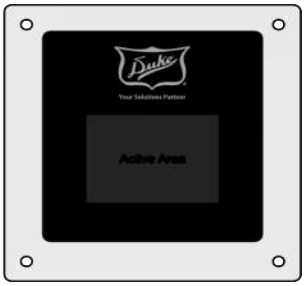

Touch Screen Control can be mounted in cabinet body

OPTIONS:

❒ No drain, dry heat only with removeable non-stick liner

Approval Stamp(s):

PRODUCT INFORMATION:
PROJECT: _____
ITEM: _____
QUANTITY: _____

MODEL:
Duke HotColdFreeze™

❒	HCF-1	1 Wells
❒	HCF-2	2 Wells
❒	HCF-3	3 Wells
❒	HCF-4	4 Wells
❒	HCF-5	5 Wells

BODY:
- Top Mount with flush mount pans
- Stainless Steel - formed, welded, and polished to high finish
- Sealing gasket
- Drains at each well

CAPACITIES:
- Standard 12" x 20" steam table pans
- 2-1/2", 4" and 6" deep

CONTROLS:
- Intuitive, easy to use touch screen control changes mode of operation
- 3 wet heat, 3 dry heat, 3 refrigerated and 1 freeze mode.
- 1 control per food well
- Controls have a built-in Wifi modem and redundant controls capabilities for future activation.
- Six foot cord supplied between control and touchscreen
- Complies with part 15 of the FCC rules.

Refrigeration:
- 5 Year compressor replacement
- R448a Refrigerant
- Compressor slides out 15.375" for easy service.

Serviceability:
- Unit can be serviced in counter, no need to remove.
- Six foot Cord and plug supplied

CERTIFICATIONS:

ANSI/ NSF 169

PRODUCT HOLDING UNIT - Duke HotColdFreeze™

Catalog No. Duke HotColdFreeze™

A.I.A. File No. 35-C-13

DUKE MANUFACTURING CO.
2305 N. Broadway
St. Louis, MO 63102
800.735.3853 Toll Free
314.231.5074 Fax
www.dukemfg.com

Specification subject to change

WARNING For CA residents: go to www.dukemfg.com/prop65 for prop 65 warning

Duke HOTCOLDFREEZE™

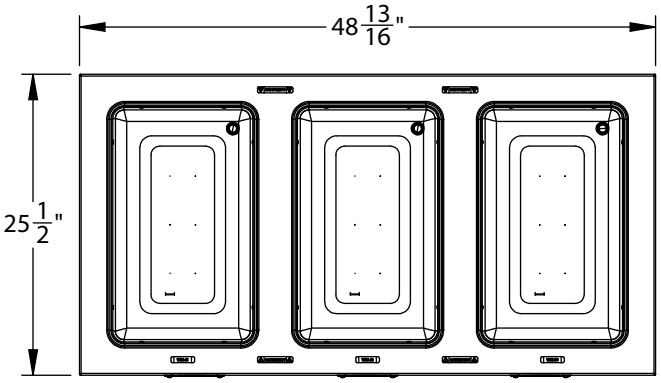

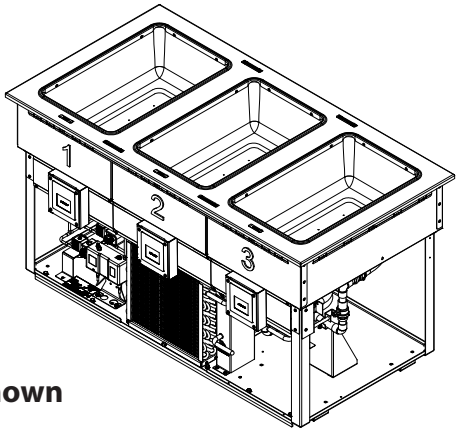

Model HCF-3 Shown

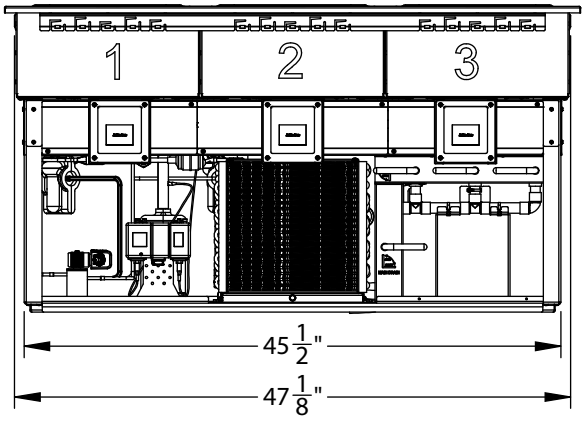

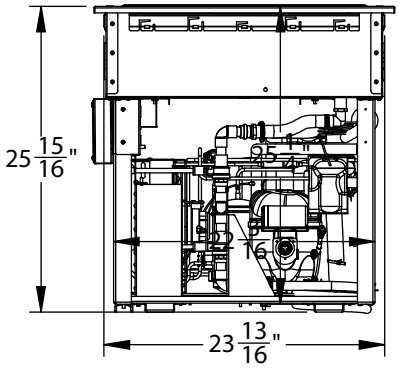

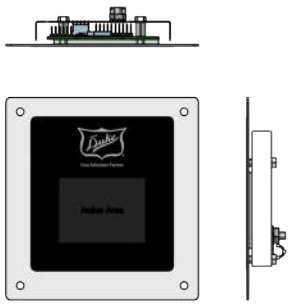

DIMENSIONS:

Liner Widths: 23.82" (60.50 cm); Cutout Depth: 24.00"(60.96 cm) **FREIGHT CLASS: 100**

Model	Overall Length		Cold Pan - L		Cutout - L		Depth		Height		Cube ft. Crated	Weight	
	in	cm	in	cm	in	cm	in	cm	in	cm		lbs	kg
HCF-1	17.50	44.45	15.81	40.16	16.00	40.64	25.5	64.77	25.94	65.89	12.5	95	43
HCF-2	33.19	79.22	31.44	79.86	31.69	80.50	25.5	64.77	25.94	65.89	21.0	145	65.8
HCF-3	48.82	124.00	47.13	119.7	47.38	120.35	25.5	64.77	25.94	65.89	28.9	198	89.8
HCF-4	64.50	163.82	62.81	159.54	63.00	160.02	25.5	64.77	25.94	65.89	38.0	287	130.2
HCF-5	80.19	203.68	78.44	199.24	79.00	200.66	25.5	64.77	25.94	65.89	45.0	340	154.2

Note: Controls can be mounted in cabinet body

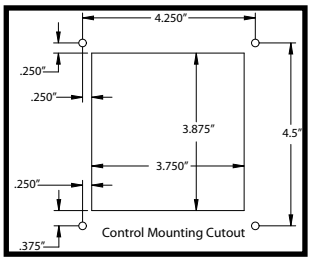

ELECTRICAL SPECIFICATIONS:

Model	120V/60Hz			120 / 208V 60Hz			120 / 240V 60Hz			Refrigeration				
	Watts	Amps	NEMA	Watts	Amps	NEMA	Watts	Amps	NEMA		HP	Refrig.	OZ	Grams
HCF-1	660	5.5	5-15P	660	5.5	L14-20P	660	5.5	L14-20P		1/3	448a	15.0	466.6
HCF-2	1260	10.5	5-15P	1260	10.5	L14-20P	1260	10.5	L14-20P		1/3	448a	19.5	606.5
HCF-3	1920	16	5-20P	1320	11	L14-20P	1320	11	L14-20P		1/2	448a	30.0	933.1
HCF-4	2520	21	L5-30P	1920	16	L14-20P	1920	16	L14-20P		1/2	448a	38.0	1181.9
HCF-5	3360	28	5-50P	2064	17.2	L14-30P	2064	17.2	L14-30P	Sys-1	1/3	448a	19.5	606.5
										Sys-2	1/2	448A	30.0	933.1
HCF-5 +	4800	40	5-50P	2736	22.8	L14-30P	2736	22.8	L14-30P	Sys-1	1/3	448a	19.5	606.5
										Sys-2	1/2	448A	30.0	933.1
+ = Provided with one 120V, 15A general use convenience recepticle														

Duke Manufacturing Co.
2305 N. Broadway
St. Louis, MO 63102
Phone: 314-231-1130
Toll Free: 1-800-735-3853
Fax: 314-231-5074
www.dukemfg.com

Printed in U.S.A.

© 2022, Duke Manufacturing Co.

English Mfg. Inc.

ADJUSTAGUARD® ADJUSTABLE

"It's not what you see...it's what you don't see"

ITEM: _____
QTY: _____
MODEL: AMA-101A
LENGTH: _____

STANDARD SPECIFICATIONS:

Posts

- ■ 1" Diameter stainless steel post
- ■ 2" Diameter stainless steel flange
- ■ Stainless steel glass clips
- ■ Brushed #4 stainless steel finish

Unit

- ■ NSF Certified
- ■ Mounting hardware provided
- ■ Clear tempered glass with polished edges
  - □ 1/4" glass (max. span 40")
  - □ 3/8" Glass (max. span 60")

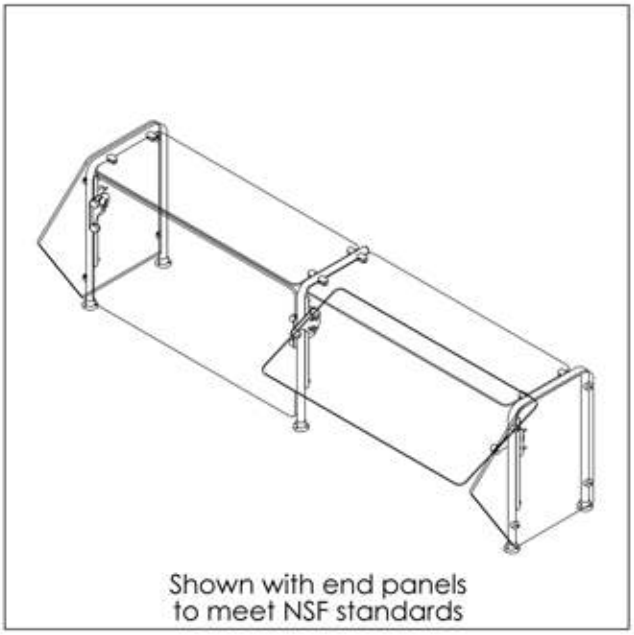

Shown with end panels to meet NSF standards

OPTIONS AND ACCESSORIES:

Tube Size

- □ 1 1/2" Diameter
- □ 2" Diameter
- □ 1 1/2" Square
- □ 2" Square
- □ Other _____

Metal Finish

- □ Mirror Polished #8
- □ Powder Coat Color RAL# _____
- □ Other _____

Glass Options

- □ Frosted
- □ Frosted logo
- □ Acrylic

Accessories

- □ Channel in lieu of glass clips
- □ Glass end panels
- □ Heat strips
- □ Heat strips with lights
- □ Fluorescent lights
- □ LED lights
- □ Cross supports
- □ Stainless steel top

Mounting Options

- □ Round flange
- □ Narrow flange
- □ Undercounter mount
- □ Heavy duty mount

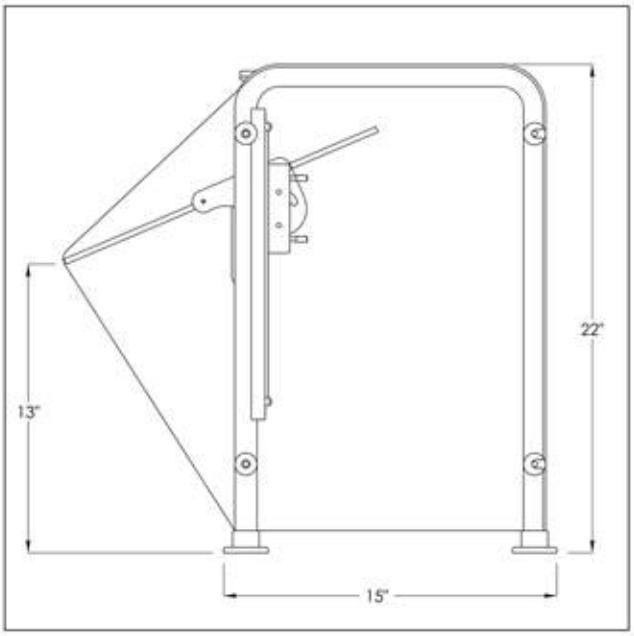

U.S. Patents: US D497,739 S
US D472,083 S
US D575,560 S
Additional patents pending

11292 Sunrise Park Drive, Rancho Cordova, CA 95742 PH: 800-651-2711 Fax: 916-638-9961
www.englishmfg.com

Rev.21911

Your Solutions Partner

Specifications

F.O.B. Sedalia, Missouri 65301



TST-46

Approval Stamp(s):

PRODUCT INFORMATION:
PROJECT: _____
ITEM: _____
QUANTITY: _____

MODEL:
Thurmaduke Serving Systems
Solid Top Units

- ❑ **TST-18** 18" length units
- ❑ **TST-32** 32" length units
- ❑ **TST-46** 46" length units
- ❑ **TST-60** 60" length units
- ❑ **TST-74** 74" length units
- ❑ **TST-88** 88" length units

TOP:

- ■ 16 gauge, 300 Series stainless steel
- ■ Sound-deadening

BODY:

- ❑ Choice of (12) powder coat paint colors
- ❑ Stainless steel body
- ■ NSF approved 5" diameter polyurethane casters
- ■ Operator's side open to bottom shelf
- ■ 7" high stainless steel rail on operator's side
- ■ End and side opposite operator fully enclosed
- ■ Intermediate and bottom shelves to match body

OPTIONS:

- ❑ 14 gauge tops
- ❑ Internal Locking device
- ❑ Pass-Thru construction
- ❑ Foodshields
- ❑ Workshelves
- ❑ Trayslides
- ❑ Special length not listed
- ❑ Recessed top (to accommodate griddles, fryers, etc.)
- ❑ 6" Stainless steel legs
- ❑ Veneered plastic laminate panels on body
- ❑ Powder coat paint colors
- ❑ Kickplates s/s or p/g

Agency Listings:

NSF

THURMADUKE SERVING SYSTEMS - SOLID TOP UNITS

Catalog No. TSS-SOLID

A.I.A. File No. 35-C-13

DUKE MANUFACTURING CO.
2305 N. Broadway
St. Louis, MO 63102
800.735.3853 Toll Free
314.231.5074 Fax
www.dukemfg.com

Specification subject to change

WARNING: Cancer and Reproductive Harm - www.p65warnings.ca.gov

THURMADUKE SERVING SYSTEMS SOLID TOP UNITS

A.I.A. File No. 35-C-13

Catalog No. TSS-SOLID

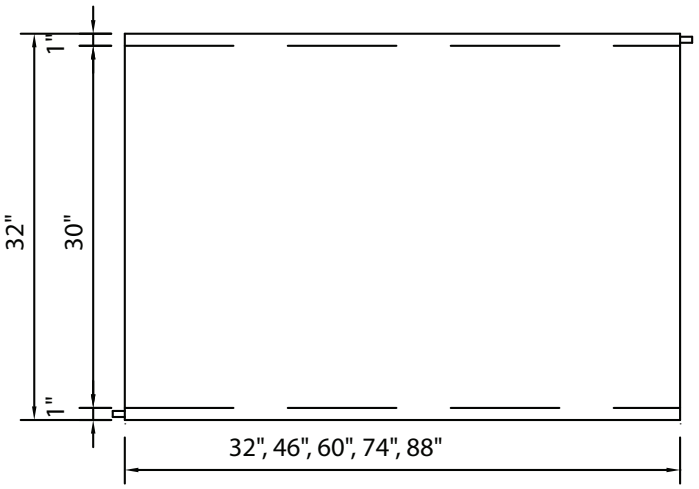

TOP VIEW

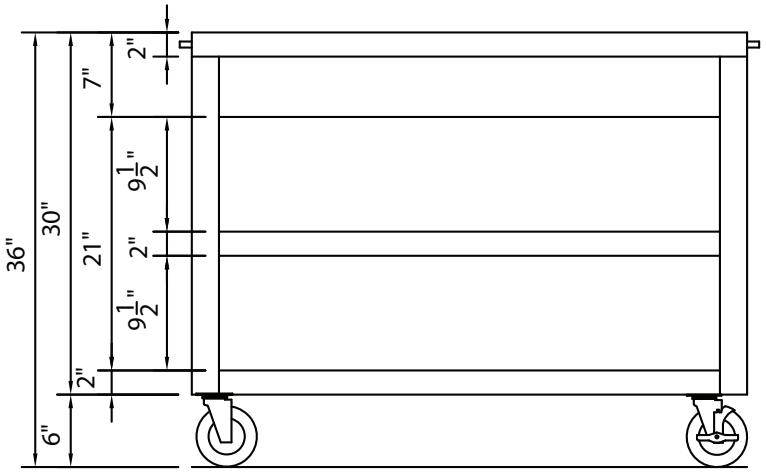

FRONT VIEW

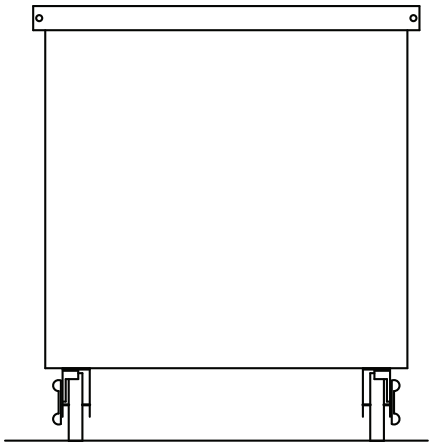

RIGHT SIDE VIEW

DIMENSIONS:

Freight Class: 150

Model	Length		Width		Height		Cube ft. crated	Weight	
	in	cm	in	cm	in	cm		lbs	kg
TST-18	18	45.7	32	81.3	36	91.4	22.0	200	90.9
TST-32	32	81.3	32	81.3	36	91.4	34.8	215	97.7
TST-46	46	116.8	32	81.3	36	91.4	47.7	314	142.7
TST-60	60	152.4	32	81.3	36	91.4	60.5	380	172.7
TST-74	74	188.0	32	81.3	36	91.4	73.3	446	202.7
TST-88	88	223.5	32	81.3	36	91.4	86.2	480	218.2

THURMADUKE SERVING SYSTEMS - SOLID TOP UNITS

Duke Your Solutions Partner

Duke Manufacturing Co.
2305 N. Broadway
St. Louis, MO 63102

Phone: 314-231-1130
Toll Free: 1-800-735-3853
Fax: 314-231-5074

www.dukemfg.com

Printed in U.S.A
© 2020, Duke Manufacturing Co.

English Mfg. Inc.

ADJUSTAGUARD® ADJUSTABLE

"It's not what you see...it's what you don't see"

ITEM: _____
QTY: _____
MODEL: AMA-101A
LENGTH: _____

STANDARD SPECIFICATIONS:

Posts

- ■ 1" Diameter stainless steel post
- ■ 2" Diameter stainless steel flange
- ■ Stainless steel glass clips
- ■ Brushed #4 stainless steel finish

Unit

- ■ NSF Certified
- ■ Mounting hardware provided
- ■ Clear tempered glass with polished edges
  - □ 1/4" glass (max. span 40")
  - □ 3/8" Glass (max. span 60")

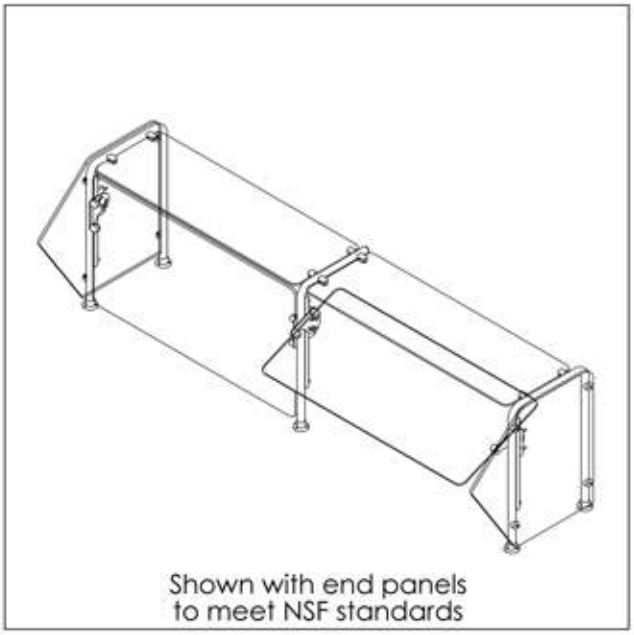

Shown with end panels to meet NSF standards

OPTIONS AND ACCESSORIES:

Tube Size

- □ 1 1/2" Diameter
- □ 2" Diameter
- □ 1 1/2" Square
- □ 2" Square
- □ Other _____

Metal Finish

- □ Mirror Polished #8
- □ Powder Coat Color RAL# _____
- □ Other _____

Glass Options

- □ Frosted
- □ Frosted logo
- □ Acrylic

Accessories

- □ Channel in lieu of glass clips
- □ Glass end panels
- □ Heat strips
- □ Heat strips with lights
- □ Fluorescent lights
- □ LED lights
- □ Cross supports
- □ Stainless steel top

Mounting Options

- □ Round flange
- □ Narrow flange
- □ Undercounter mount
- □ Heavy duty mount

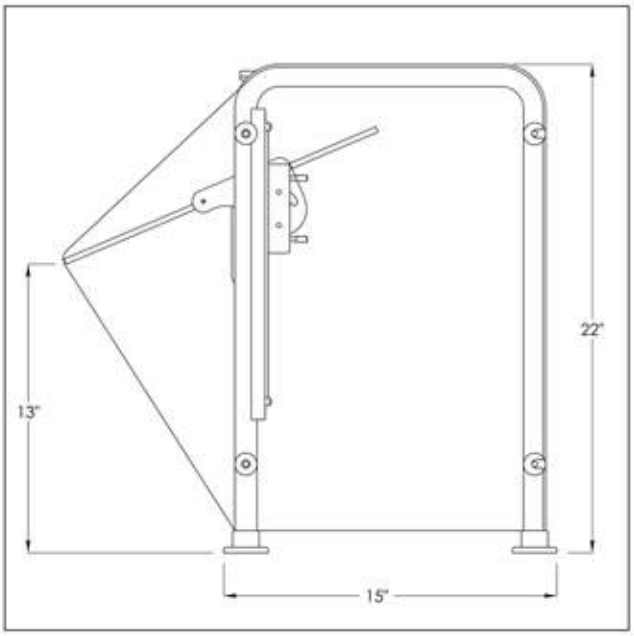

U.S. Patents: US D497,739 S
US D472,083 S
US D575,560 S
Additional patents pending

11292 Sunrise Park Drive, Rancho Cordova, CA 95742 PH: 800-651-2711 Fax: 916-638-9961
www.englishmfg.com

Rev.21911

Your Solutions Partner

Specifications

F.O.B. Sedalia, Missouri 65301



TST-46

Approval Stamp(s):

PRODUCT INFORMATION:
PROJECT: _____
ITEM: _____
QUANTITY: _____

MODEL:

Thurmaduke Serving Systems
Solid Top Units

❑ **TST-18**	18″ length units
❑ **TST-32**	32″ length units
❑ **TST-46**	46″ length units
❑ **TST-60**	60″ length units
❑ **TST-74**	74″ length units
❑ **TST-88**	88″ length units

TOP:

- 16 gauge, 300 Series stainless steel
- Sound-deadening

BODY:

- ❑ Choice of (12) powder coat paint colors
- ❑ Stainless steel body
- NSF approved 5″ diameter polyurethane casters
- Operator's side open to bottom shelf
- 7″ high stainless steel rail on operator's side
- End and side opposite operator fully enclosed
- Intermediate and bottom shelves to match body

OPTIONS:

- ❑ 14 gauge tops
- ❑ Internal Locking device
- ❑ Pass-Thru construction
- ❑ Foodshields
- ❑ Workshelves
- ❑ Trayslides
- ❑ Special length not listed
- ❑ Recessed top (to accommodate griddles, fryers, etc.)
- ❑ 6″ Stainless steel legs
- ❑ Veneered plastic laminate panels on body
- ❑ Powder coat paint colors
- ❑ Kickplates s/s or p/g

Agency Listings:

NSF

DUKE MANUFACTURING CO.
2305 N. Broadway
St. Louis, MO 63102
800.735.3853 Toll Free
314.231.5074 Fax
www.dukemfg.com

Specification subject to change

WARNING: Cancer and Reproductive Harm - www.p65warnings.ca.gov

SS-1178 Thurmaduke - Solid Top

REV B 04/20/2020

THURMADUKE SERVING SYSTEMS - SOLID TOP UNITS

Catalog No. TSS-SOLID

A.I.A. File No. 35-C-13

THURMADUKE SERVING SYSTEMS
SOLID TOP UNITS

A.I.A. File No. 35-C-13

Catalog No. TSS-SOLID

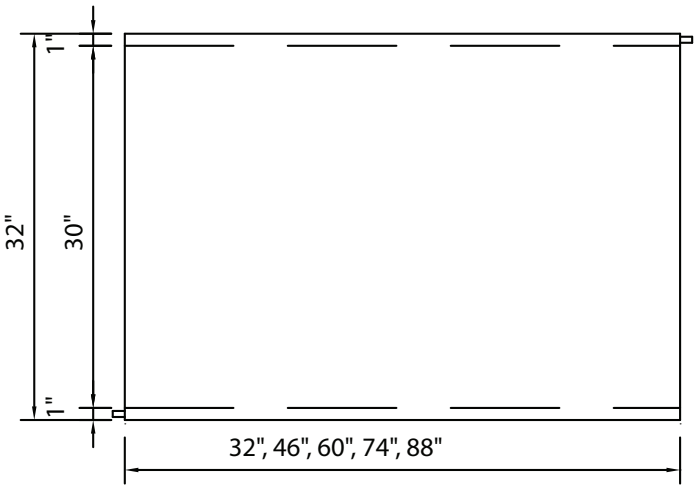

TOP VIEW

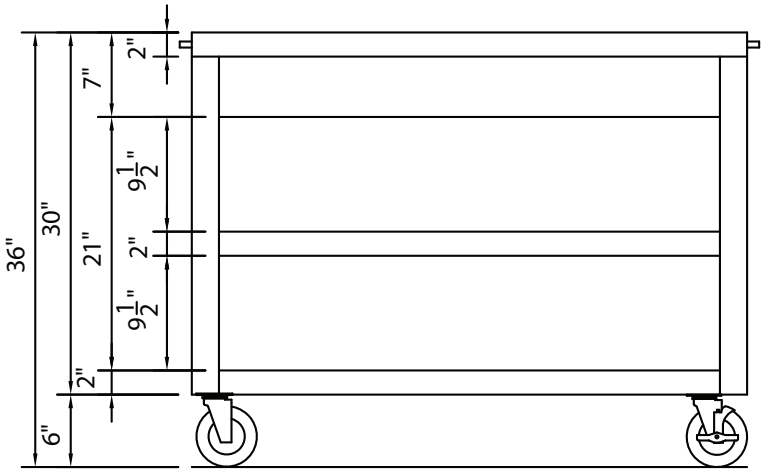

FRONT VIEW

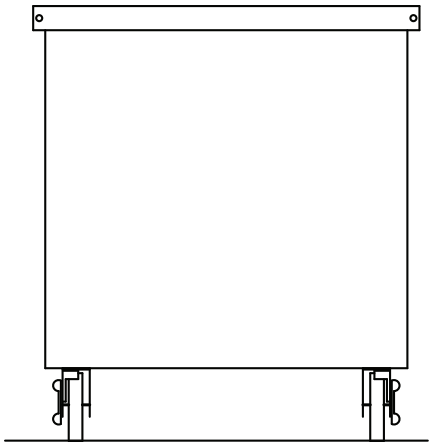

RIGHT SIDE VIEW

DIMENSIONS:

Freight Class: 150

Model	Length		Width		Height		Cube ft. crated	Weight	
	in	cm	in	cm	in	cm		lbs	kg
TST-18	18	45.7	32	81.3	36	91.4	22.0	200	90.9
TST-32	32	81.3	32	81.3	36	91.4	34.8	215	97.7
TST-46	46	116.8	32	81.3	36	91.4	47.7	314	142.7
TST-60	60	152.4	32	81.3	36	91.4	60.5	380	172.7
TST-74	74	188.0	32	81.3	36	91.4	73.3	446	202.7
TST-88	88	223.5	32	81.3	36	91.4	86.2	480	218.2

THURMADUKE SERVING SYSTEMS - SOLID TOP UNITS

Duke Manufacturing Co.
2305 N. Broadway
St. Louis, MO 63102

Phone: 314-231-1130
Toll Free: 1-800-735-3853
Fax: 314-231-5074

www.dukemfg.com

Your Solutions Partner

Printed in U.S.A
© 2020, Duke Manufacturing Co.

Specifications

F.O.B. Sedalia, Missouri 65301

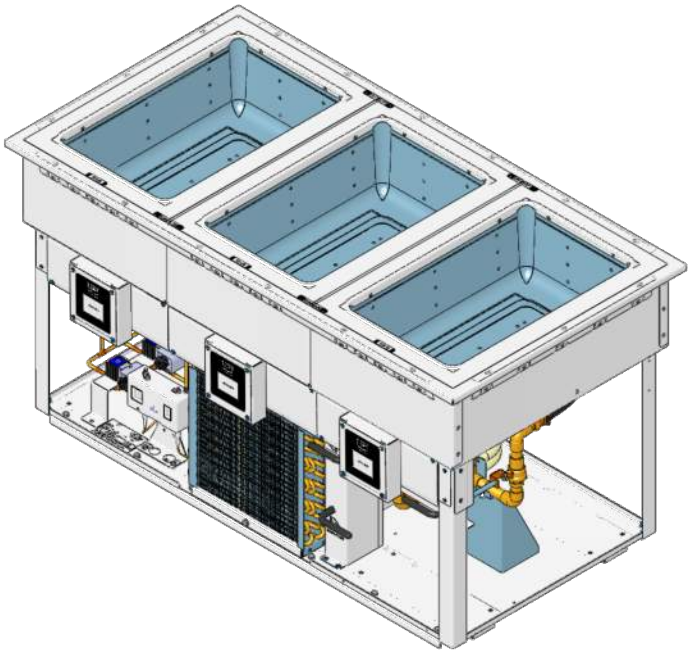

Model HCF-3 Shown

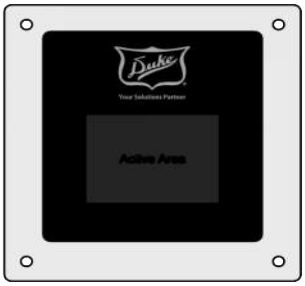

Touch Screen Control can be mounted in cabinet body

OPTIONS:

❒ No drain, dry heat only with removeable non-stick liner

Approval Stamp(s):

PRODUCT INFORMATION:
PROJECT: _____
ITEM: _____
QUANTITY: _____

MODEL:
Duke HotColdFreeze™

❒	HCF-1	1 Wells
❒	HCF-2	2 Wells
❒	HCF-3	3 Wells
❒	HCF-4	4 Wells
❒	HCF-5	5 Wells

BODY:
- Top Mount with flush mount pans
- Stainless Steel - formed, welded, and polished to high finish
- Sealing gasket
- Drains at each well

CAPACITIES:
- Standard 12" x 20" steam table pans
- 2-1/2", 4" and 6" deep

CONTROLS:
- Intuitive, easy to use touch screen control changes mode of operation
- 3 wet heat, 3 dry heat, 3 refrigerated and 1 freeze mode.
- 1 control per food well
- Controls have a built-in Wifi modem and redundant controls capabilities for future activation.
- Six foot cord supplied between control and touchscreen
- Complies with part 15 of the FCC rules.

Refrigeration:
- 5 Year compressor replacement
- R448a Refrigerant
- Compressor slides out 15.375" for easy service.

Serviceability:
- Unit can be serviced in counter, no need to remove.
- Six foot Cord and plug supplied

CERTIFICATIONS:

ANSI/ NSF 169

PRODUCT HOLDING UNIT - Duke HotColdFreeze™

Catalog No. Duke HotColdFreeze™

A.I.A. File No. 35-C-13

DUKE MANUFACTURING CO.
2305 N. Broadway
St. Louis, MO 63102
800.735.3853 Toll Free
314.231.5074 Fax
www.dukemfg.com

SS-1100 Duke HotColdFreeze

Specification subject to change

WARNING For CA residents: go to www.dukemfg.com/prop65 for prop 65 warning

REV F 02/2022

Duke HOTCOLDFREEZE™

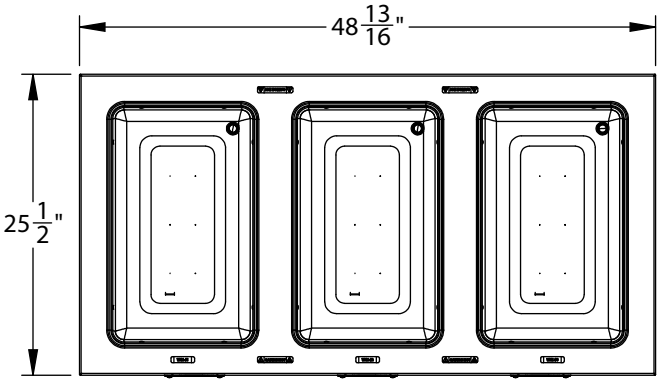

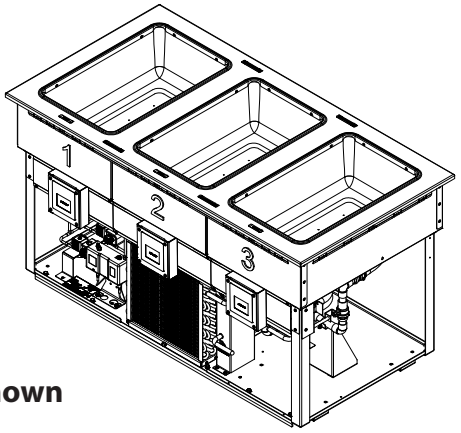

Model HCF-3 Shown

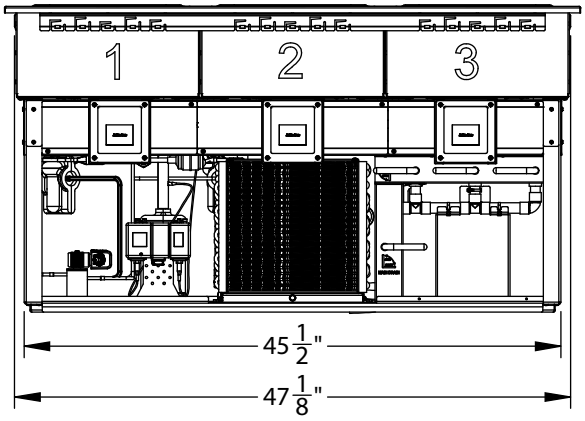

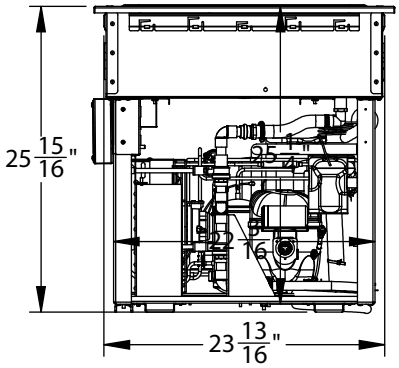

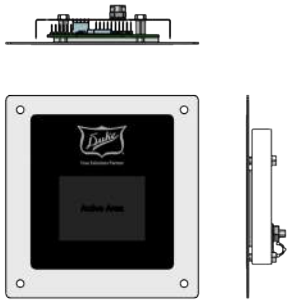

DIMENSIONS:

Liner Widths: 23.82" (60.50 cm); Cutout Depth: 24.00"(60.96 cm) **FREIGHT CLASS: 100**

Model	Overall Length		Cold Pan - L		Cutout - L		Depth		Height		Cube ft. Crated	Weight	
	in	cm	in	cm	in	cm	in	cm	in	cm		lbs	kg
HCF-1	17.50	44.45	15.81	40.16	16.00	40.64	25.5	64.77	25.94	65.89	12.5	95	43
HCF-2	33.19	79.22	31.44	79.86	31.69	80.50	25.5	64.77	25.94	65.89	21.0	145	65.8
HCF-3	48.82	124.00	47.13	119.7	47.38	120.35	25.5	64.77	25.94	65.89	28.9	198	89.8
HCF-4	64.50	163.82	62.81	159.54	63.00	160.02	25.5	64.77	25.94	65.89	38.0	287	130.2
HCF-5	80.19	203.68	78.44	199.24	79.00	200.66	25.5	64.77	25.94	65.89	45.0	340	154.2

Note: Controls can be mounted in cabinet body

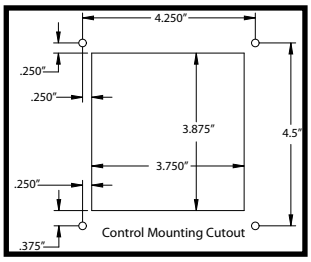

ELECTRICAL SPECIFICATIONS:

Model	120V/60Hz			120 / 208V 60Hz			120 / 240V 60Hz			Refrigeration				
	Watts	Amps	NEMA	Watts	Amps	NEMA	Watts	Amps	NEMA		HP	Refrig.	OZ	Grams
HCF-1	660	5.5	5-15P	660	5.5	L14-20P	660	5.5	L14-20P		1/3	448a	15.0	466.6
HCF-2	1260	10.5	5-15P	1260	10.5	L14-20P	1260	10.5	L14-20P		1/3	448a	19.5	606.5
HCF-3	1920	16	5-20P	1320	11	L14-20P	1320	11	L14-20P		1/2	448a	30.0	933.1
HCF-4	2520	21	L5-30P	1920	16	L14-20P	1920	16	L14-20P		1/2	448a	38.0	1181.9
HCF-5	3360	28	5-50P	2064	17.2	L14-30P	2064	17.2	L14-30P	Sys-1	1/3	448a	19.5	606.5
										Sys-2	1/2	448A	30.0	933.1
HCF-5 +	4800	40	5-50P	2736	22.8	L14-30P	2736	22.8	L14-30P	Sys-1	1/3	448a	19.5	606.5
										Sys-2	1/2	448A	30.0	933.1

+ = Provided with one 120V, 15A general use convenience recepticle

Duke
Your Solutions Partner

Duke Manufacturing Co.
2305 N. Broadway
St. Louis, MO 63102

Phone: 314-231-1130
Toll Free: 1-800-735-3853
Fax: 314-231-5074

www.dukemfg.com

Printed in U.S.A.
© 2022, Duke Manufacturing Co.

English Mfg. Inc.

ADJUSTAGUARD® ADJUSTABLE

"It's not what you see...it's what you don't see"

ITEM: _____
QTY: _____
MODEL: AMA-101A
LENGTH: _____

STANDARD SPECIFICATIONS:

Posts

- ■ 1" Diameter stainless steel post
- ■ 2" Diameter stainless steel flange
- ■ Stainless steel glass clips
- ■ Brushed #4 stainless steel finish

Unit

- ■ NSF Certified
- ■ Mounting hardware provided
- ■ Clear tempered glass with polished edges
  - □ 1/4" glass (max. span 40")
  - □ 3/8" Glass (max. span 60")

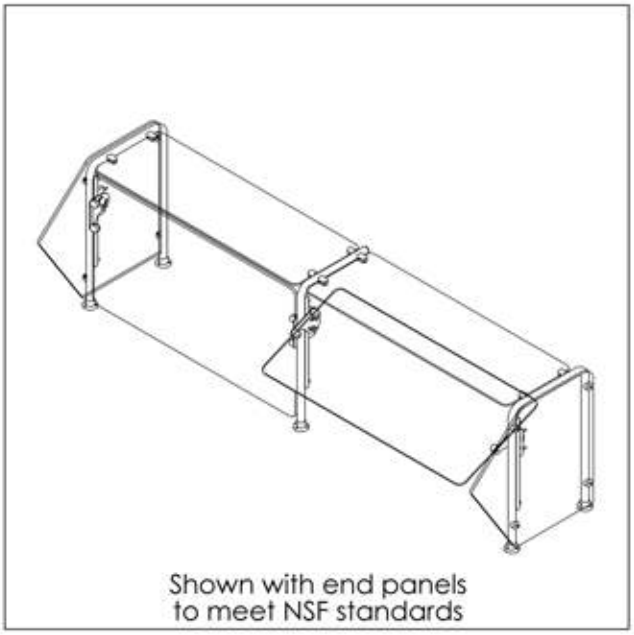

Shown with end panels to meet NSF standards

OPTIONS AND ACCESSORIES:

Tube Size

- □ 1 1/2" Diameter
- □ 2" Diameter
- □ 1 1/2" Square
- □ 2" Square
- □ Other _____

Metal Finish

- □ Mirror Polished #8
- □ Powder Coat Color RAL# _____
- □ Other _____

Glass Options

- □ Frosted
- □ Frosted logo
- □ Acrylic

Accessories

- □ Channel in lieu of glass clips
- □ Glass end panels
- □ Heat strips
- □ Heat strips with lights
- □ Fluorescent lights
- □ LED lights
- □ Cross supports
- □ Stainless steel top

Mounting Options

- □ Round flange
- □ Narrow flange
- □ Undercounter mount
- □ Heavy duty mount

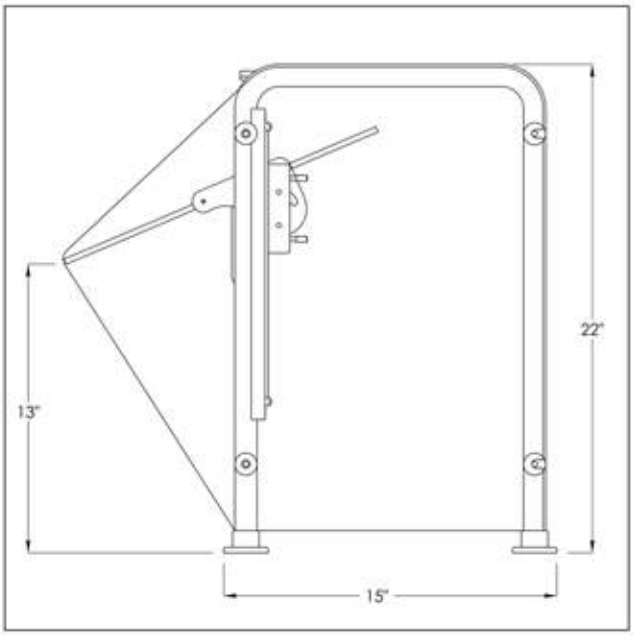

U.S. Patents: US D497,739 S
US D472,083 S
US D575,560 S
Additional patents pending

11292 Sunrise Park Drive, Rancho Cordova, CA 95742 PH: 800-651-2711 Fax: 916-638-9961
www.englishmfg.com

Rev.21911

CADDY Food Service Systems

ITEM NO:

PROJECT:

LOCATION:

Self-Leveling Dispensers for Trays Cabinet or Cantilever Style

TOP VIEW

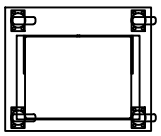

TOP VIEW

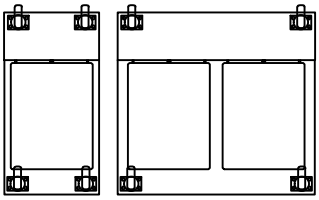

TOP VIEW

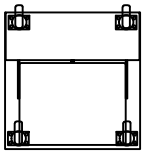



CM-1418



CM-1814-2C



CM-1418-C

Capacity: 75 trays*
(Actual capacities vary with shape of tray to be dispensed.)
* CM-1814-2C capacity: 150 trays

Dimensions				
Model	**Length**	**Width**	**Height**	**Trays**
CM-1418	25 3/8"	21 1/2"	34 1/4"	14" x 18"
CM-1622	27"	23 1/2"	34 1/4"	16" x 22"
CM-1814-C	16 1/2"	31 3/4"	35 1/2"	14" x 18"
CM-2015-C	16 1/2"	31 3/4"	35 1/2"	15" x 20"
CM-2216-C	16 1/2"	31 3/4"	35 1/2"	16" x 22"
CM-1418-C	23 1/2"	23 3/4"	35 1/2"	14" x 18"
CM-1520-C	23 1/2"	23 3/4"	35 1/2"	15" x 20"
CM-1622-C	23 1/2"	24 3/4"	35 1/2"	16" x 22"
CM-1814-2C	34 1/4"	24 3/4"	35 1/2"	14" x 18"

General Specifications

Caddy Magic self-leveling dispenser to be Caddy Corporation model CM-_____.

Self-leveling mechanism to be cantilevered suspension type. Removable panel to be provided to permit easy calibration without the use of tools, for full load factors from 20 to 182 pounds and without prior identification of wares, irrespective of weight, height, or brand. Mechanism to be free of cables, chains, pulleys, sprockets, gears, levers, crank handles or components requiring periodic maintenance and lubrication.

Removable load platform to be 18 gauge stainless steel and secured to 16 gauge stainless steel angle support frame and a pair of cantilevered suspension arms. Suspension arms to be of rust-resistant 1/4" steel and to be securely guided by ball bearing rollers. Total stacking height to edge of top frame to be not less than 22".

Cabinet models specifications:
Unit to have 16 gauge stainless steel top with 2" turned down channel edge on 4 sides and welded finished corners. Exterior of cabinet to be stainless steel. Cabinet corners to be reinforced with 16 gauge stainless steel channels and to have full height extruded plastic vertical bumpers.

Bottom of cabinet to be 12 gauge stainless steel, rust resistant metal and to have 2-1/2" diameter center clean-out hole with a removable plug. Unit to be mounted on four 4" diameter swivel type casters with polyurethane tires.

Cantilever models specifications:
The lower rack storage platform to be formed of 16 gauge stainless steel, channeled down on all four sides with two stainless steel reinforce members underneath. Unit to be mounted on four 4" diameter swivel type casters with polyurethane tires.

Unit to be provided with the following accessories:

Accessories

- ☐ **ACC-63** - 5" diameter swivel casters with polyurethane tires in lieu of 4" diameter swivel casters. (Add 1-1/8" to height)
- ☐ **ACC-41** - Caster brakes on two diagonal casters.
- ☐ **ACC-50** - Perimeter bumpers with replaceable corner bumpers. (Add 1-1/4" to length and width)
- ☐ **ACC-51** - Guides for automatic tray stacking.
- ☐ **ACC-52** - Vertical corner bumpers only. Easy to replace. (Add 1-1/4" to length and width)

CADDY CORPORATION
509 Sharptown Road P.O. Box 345
Bridgeport, NJ 08014-0345
Tel: 856-467-4222 Fax: 856-467-5511
internet: www.caddycorp.com

All specifications subject to change without notice

CRES COR®

JOB: _____

ITEM NO: _____

INSULATED EXTRUDED SIDEWALL UTILITY CABINET MODEL 109-1840

FEATURES AND BENEFITS:

- All purpose cabinet for transport and storage. Load with plastic food boxes filled with product to create your own food file.
- Insulated side and back walls prevent temperature loss.
- Same size top and base extend past sidewalls to act as natural bumpers for protection. Extruded frame fully welded.
- Body constructed of non-corrosive, Hi-Tensile aluminum for strength and ease of mobility.
- Reinforced, full length door swings 270˚ Card clip included.
- Gravity type latch secures door during transport.
- Interlocking extruded sidewalls hold 18" x 26" pans and plastic food boxes on 1-1/2" centers. Easy to clean.
- Interior pan stops on door allow proper air flow.
- Heavy duty 5" swivel casters, two with brakes. Provides mobility when fully loaded.

Note: Designed to hold standard 18 x 26" pans by the lip. Due to the variability of pan manufacturers/quality of pans being held/pan sizes, please contact manufacturer or provide a sample pan to ensure a proper fit.



109-1840

ACCESSORIES and OPTIONS (Available at extra cost):

- ❑ Lock Hasp
- ❑ Various Caster Options
- ❑ Corner Bumpers
- ❑ Perimeter Bumper
- ❑ Plexiglas Door
- ❑ Push Handle
- ❑ Left-Hand Hinged Door
- ❑ Kold Keepers

See page A-20 for accessory details.

CRES COR®
5925 Heisley Road • Mentor, OH 44060-1833
Phone: 877/CRESCOR • Fax: 440/350-7267
www.crescor.com

109-1840

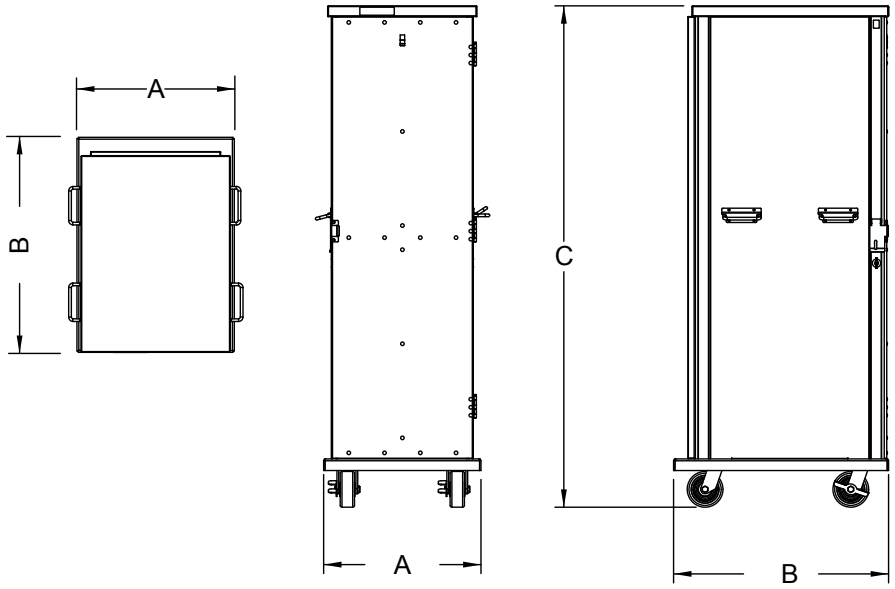

CRES COR MODEL NO.	PAN			DIM "A"	DIM "B"	DIM "C"	INSIDE DIMENSIONS				WEIGHT ACT.
	CAP	SIZE		WIDTH	DEPTH	HEIGHT	WIDTH	DEPTH	HEIGHT		
109-1840	40	18 x 26	IN	22	30-1/16	70-1/8	18-5/16	26	61-1/2	LBS	150
		460 x 660	MM	560	765	1780	465	660	1565	KG	68

When ordering bumpers, add 2" to overall dimensions.

ALL ALUMINUM CONSTRUCTION IS RIVETED, WELDED AND FINISHED.

CABINET:

- Posts: Extruded channels, 7/8 x 2-1/4 x .102, welded to top and base, form a solid frame.
- Sides: Interlocking extruded 6" panels, smooth outer sides. Double wall with 1" insulation.
- Back panel: Fitted into posts, riveted to top and reinforced. Double wall with 1" insulation.
- Tie rod: Applied at front.
- Top: One piece .100 aluminum.
- Bail Handles (2): Mounted on each side.

BASE:

- One piece construction, .190 aluminum.
- Casters: 5" dia., swivel, modulus tires, 2" wide, load cap. 375 lbs. each, temp. range -45˚/+180˚F. Delrin bearings. Front casters equipped with brakes.

DOOR:

- Panel: Formed .100 aluminum.
- Reinforcement: 1/4 x 1-1/2 extruded bars riveted horizontally to top, center and bottom.
- Latch: Gravity type, nickel plated steel.
- Swings 270˚ on 3 butt hinges, riveted to posts and door.
- Pan stop channel.

PAN SLIDES:

- Extruded interlocking side walls act as pan slides on 1-1/2" centers.

Note: Designed to hold standard 18 x 26" pans by the lip. Due to the variability of pan manufacturers/quality of pans being held/pan sizes, please contact manufacturer or provide a sample pan to ensure a proper fit.

SHORT FORM SPECIFICATIONS

Cres Cor Insulated Utility Cabinet Model 109-1840. Formed and welded .100 aluminum top, .190 aluminum base. Interlocking extruded aluminum sidewalls for (40) 18" x 26" pans and plastic food boxes on 1-1/2" centers. Insulated side and back walls. Formed .100 aluminum reinforced door. 5" swivel modulus casters, Delrin bearings. Load capacity 375 lbs. each. 2-Year Parts / 1-Year Labor warranty. Provide the following accessories:

_____ _____ _____.

CRES COR®
5925 Heisley Road • Mentor, OH 44060-1833
Phone: 877/CRESCOR • Fax: 440/350-7267
www.crescor.com

© Crescent Metal Products, Inc. 2017 All rights reserved.

In line with its policy to continually improve its products, CRES COR reserves the right to change materials and specifications without notice.

Made in America Since 1936

CRES COR®

PROOF HOT CABINETS **D**

ACCESSORIES

PERIMETER BUMPER
#1405-000

Non-marking reinforced gray rubber strip mounts to base of cabinet for protection. Adds 2" to depth and width.



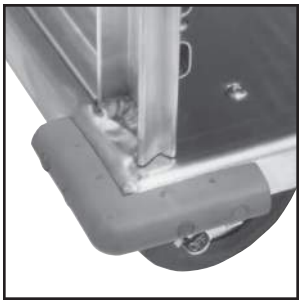

CORNER BUMPERS
#1056-002

Non-marking gray rubber strips mount to corners of cabinet base for protection. Adds 2" to depth and width.

PUSH HANDLE
#1087-000

Stainless steel rod with donut bumper on each end mounts 40" from floor to back or side of cabinet (specify location). Provides maneuverability.





BAIL HANDLE KIT
#1265-000

Two grip handles mounted to each side of cabinet 30" from floor for lifting and maneuvering. Drop to sides when not in use.



CASTER OPTIONS

Standard 5" dia. modulus casters can be substituted with polyurethane wheels or wheels of various diameters. Contact factory for casters available for your application.

CRES COR®
5925 Heisley Road • Mentor, OH 44060-1833
Phone: 877/CRESCOR • Fax: 440/350-7267
www.crescor.com

PAN SIZE CHART
for Universal Angle Models (-UA)

Cres Cor adjustable universal angles are designed to hold trays and pans shown below and in illustration on right.

Quantity of angles and adjustment increments are found on the product catalog page.

PAN TYPES AND SIZES

		Capacity per set of angles
1	Maxi Pan (20-3/4" x 25-1/2" x 1-1/8")	1
	European Standard Gastro-Norm Pan (20-3/4" x 25-1/2" x 3/4")	1
2	Steam Table Pan (12" x 20" x 2-1/2")	2
	Steam Table Pan (12" x 20" x 4")	2
3	Roast Pan (10-7/8" x 19-3/4" x 3-1/2")	2
	Roast Pan (10-7/8" x 19-3/4" x 2-1/4")	2
4	Roasting Pan (18" x 26" x 4")	1
	Deep Roasting Pan (22-1/2" x 20-1/2" x 6-1/2")	1
	Baking Pan (18" x 26" x 2")	1
5	Steam Table Pan (12" x 20" x 4")	2
	Steam Table Pan (12" x 20" x 2")	2
6	Baking Pan (20" x 22" x 4")	1
	Baking Pan (20" x 22" x 2")	1
	Baking Pan (20" x 22" x 1")	1
7	Steam Table Pan (12" x 20" x 2")	2
	Steam Table Pan (12" x 18" x 6")	2
	Bun Pan (18" x 26" x 1")	1
	Half Size Bun Pan (18" x 13" x 1")	2
8	Steam Table Pan (12" x 20" x 4")	2
	Steam Table Pan (12" x 20" x 2")	2
	Cup and Glass Rack (20" x 20")	1
	Service Tray (14" x 18")	2
	Half Size Wire Basket (18" x 13" x 4")	2

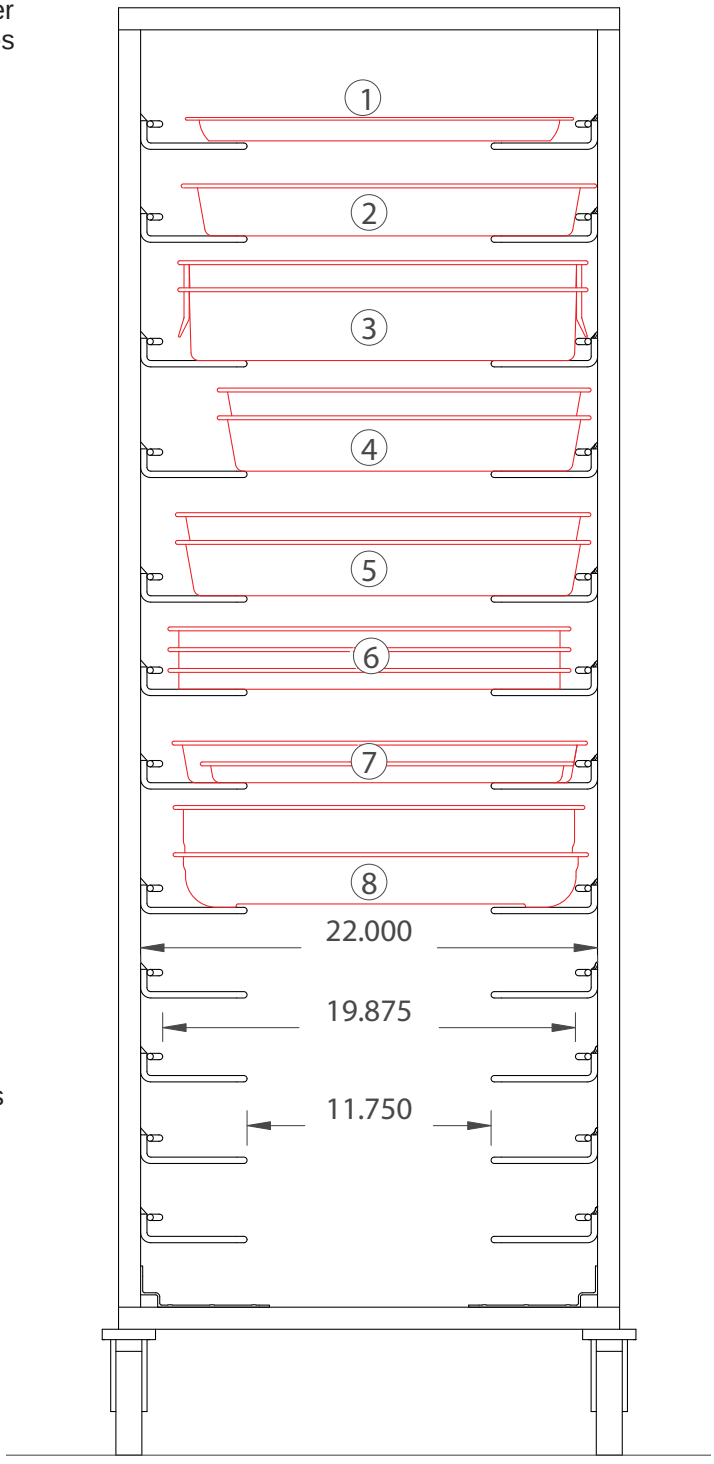

Listed are popular pan sizes in nominal and actual dimensions as identified in the trades:

PANS

Nominal Dimensions	Actual Dimensions
18" x 26"	17-3/4" x 25-3/4"
18" x 24"	17-3/4" x 24"
16" x 22"	16-9/16" x 22-1/2"
15" x 20"	15-1/4" x 20-1/2"
14" x 18"	13-15/16" x 17-13/16"
12" x 16"	12" x 16-3/8"
10" x 14"	10-5/8" x 13-3/4"
9" x 26"	8-3/4" x 25-1/2"
15" x 21" (Canada)	15-1/2" x 21-3/8"

CRES COR®
5925 Heisley Road • Mentor, OH 44060-1833
Phone: 877/CRESCOR • Fax: 440/350-7267
www.crescor.com
© Crescent Metal Products, Inc. 2008 All rights reserved.
Litho in U.S.A.

In line with its policy to continually improve its products, CRES COR reserves the right to change materials and specifications without notice.

CRES COR®

PROOF HOT CABINETS **D**

ACCESSORIES

PERIMETER BUMPER
#1405-000

Non-marking reinforced gray rubber strip mounts to base of cabinet for protection. Adds 2" to depth and width.



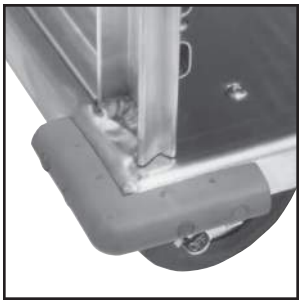

CORNER BUMPERS
#1056-002

Non-marking gray rubber strips mount to corners of cabinet base for protection. Adds 2" to depth and width.

PUSH HANDLE
#1087-000

Stainless steel rod with donut bumper on each end mounts 40" from floor to back or side of cabinet (specify location). Provides maneuverability.





BAIL HANDLE KIT
#1265-000

Two grip handles mounted to each side of cabinet 30" from floor for lifting and maneuvering. Drop to sides when not in use.



CASTER OPTIONS

Standard 5" dia. modulus casters can be substituted with polyurethane wheels or wheels of various diameters. Contact factory for casters available for your application.

CRES COR®
5925 Heisley Road • Mentor, OH 44060-1833
Phone: 877/CRESCOR • Fax: 440/350-7267
www.crescor.com

PAN SIZE CHART
for Universal Angle Models (-UA)

Cres Cor adjustable universal angles are designed to hold trays and pans shown below and in illustration on right.

Quantity of angles and adjustment increments are found on the product catalog page.

PAN TYPES AND SIZES

		Capacity per set of angles
1	Maxi Pan (20-3/4" x 25-1/2" x 1-1/8")	1
	European Standard Gastro-Norm Pan (20-3/4" x 25-1/2" x 3/4")	1
2	Steam Table Pan (12" x 20" x 2-1/2")	2
	Steam Table Pan (12" x 20" x 4")	2
3	Roast Pan (10-7/8" x 19-3/4" x 3-1/2")	2
	Roast Pan (10-7/8" x 19-3/4" x 2-1/4")	2
4	Roasting Pan (18" x 26" x 4")	1
	Deep Roasting Pan (22-1/2" x 20-1/2" x 6-1/2")	1
	Baking Pan (18" x 26" x 2")	1
5	Steam Table Pan (12" x 20" x 4")	2
	Steam Table Pan (12" x 20" x 2")	2
6	Baking Pan (20" x 22" x 4")	1
	Baking Pan (20" x 22" x 2")	1
	Baking Pan (20" x 22" x 1")	1
7	Steam Table Pan (12" x 20" x 2")	2
	Steam Table Pan (12" x 18" x 6")	2
	Bun Pan (18" x 26" x 1")	1
	Half Size Bun Pan (18" x 13" x 1")	2
8	Steam Table Pan (12" x 20" x 4")	2
	Steam Table Pan (12" x 20" x 2")	2
	Cup and Glass Rack (20" x 20")	1
	Service Tray (14" x 18")	2
	Half Size Wire Basket (18" x 13" x 4")	2

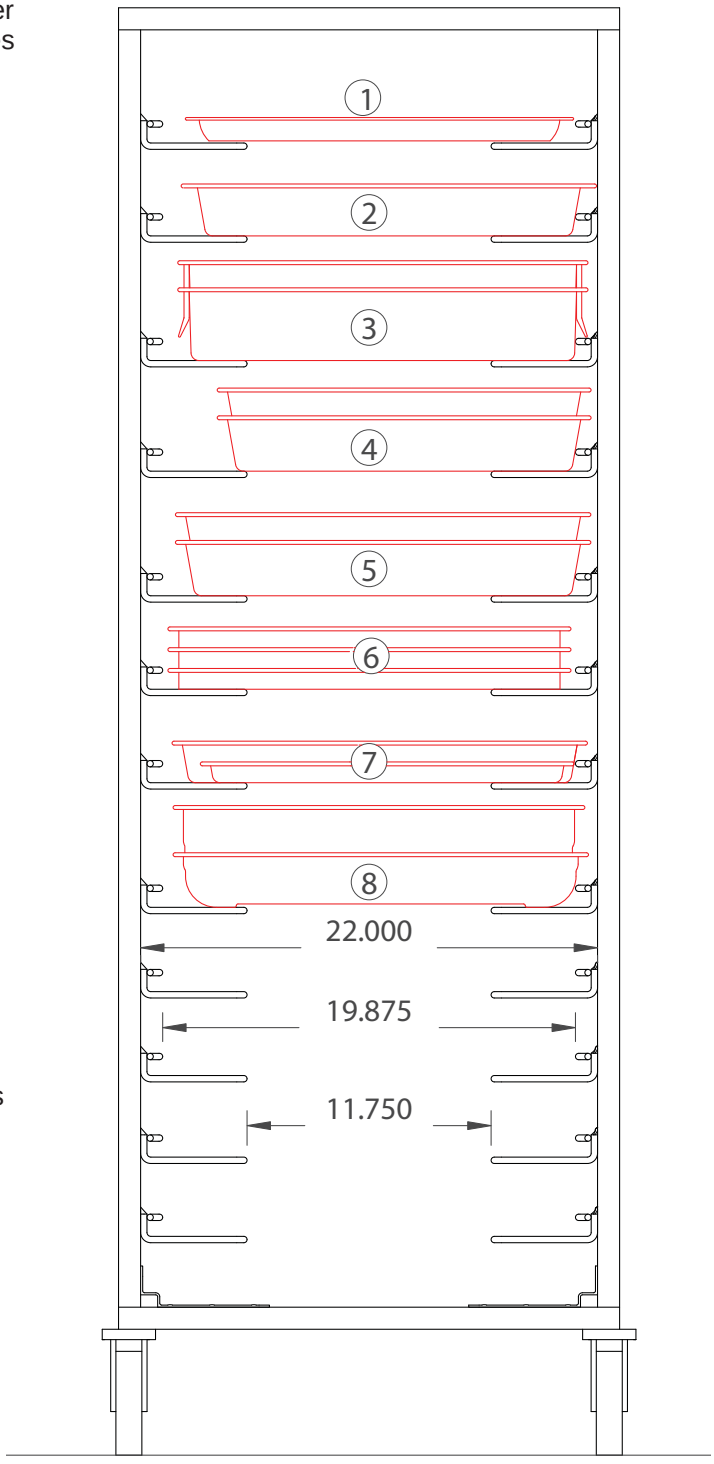

Listed are popular pan sizes in nominal and actual dimensions as identified in the trades:

PANS

Nominal Dimensions	Actual Dimensions
18" x 26"	17-3/4" x 25-3/4"
18" x 24"	17-3/4" x 24"
16" x 22"	16-9/16" x 22-1/2"
15" x 20"	15-1/4" x 20-1/2"
14" x 18"	13-15/16" x 17-13/16"
12" x 16"	12" x 16-3/8"
10" x 14"	10-5/8" x 13-3/4"
9" x 26"	8-3/4" x 25-1/2"
15" x 21" (Canada)	15-1/2" x 21-3/8"

CRES COR®
5925 Heisley Road • Mentor, OH 44060-1833
Phone: 877/CRESCOR • Fax: 440/350-7267
www.crescor.com
© Crescent Metal Products, Inc. 2008 All rights reserved.
Litho in U.S.A.

In line with its policy to continually improve its products, CRES COR reserves the right to change materials and specifications without notice.

BEVERAGE-AIR

Project: _____	AIA#
Item: _____	
Location: _____	SIS#
Approved:	

SHALLOW DEPTH WORKTOP REFRIGERATOR

WTR27HC Solid Door With Flat Top
Hydrocarbon Series

MODEL: WTR27HC-FLT



3 Year Parts/Labor Warranty

Additional 4 Year Compressor Warranty

CABINET CONSTRUCTION

- Stainless steel front, sides, door and grille (galvanized back & bottom)
- Interior liner is made of corrosion resistant aluminum
- Stainless steel top for added durability
- Flat top
- Full electronic control
- Interior thermometer is standard
- Self-closing door with 120˚ stay-open feature, on lift-off hinges
- Magnetic gasket attached to each door for positive seal
- 6” Casters, two (2) with brakes standard
- Two (2) epoxy-coated steel wire shelves
- Field-reversible door (hinge kit not included)

OPTIONS & ACCESSORIES

- Stainless steel back
- Stainless steel interior
- 16 Gauge stainless steel top
- Additional shelves
- Shelf clips
- Glass door option
- Right or left hinged door
- Locks (solid doors only)
- Wire shelf divider
- Cutting board
- 3” Casters
- 6” Legs (stainless steel, black or seismic/flange)
- Low profile casters
- Roller kit
- Remote option* (see note on back on page)

REFRIGERATION SYSTEM

- Uses environmentally friendly, energy efficient R290 refrigerant, and meets all regulatory requirements for CARB, SNAP, DOE & more
- Adaptive defrost
- Epoxy coated evaporator coil
- Refrigerators capable of maintaining product temperature between 36ºF and 38ºF

Please verify qualifying units by visiting:
www.energystar.gov/cfs

3779 Champion Blvd., Winston-Salem, NC 27105
1-888-845-9800 Fax: 1-336-245-6453
Beverage-Air.com Sales@bevair.com

WTR27HC WORKTOP REFRIGERATOR

BEVERAGE-AIR

Worktop Refrigerator - Shallow Depth
Model: WTR27HC-FLT

MODEL	WTR27HC-FLT
EXTERNAL DIMENSIONAL DATA	
Width Overall	27”
Depth Overall with Handle & Bumper	29 ⅞”
Height Overall with 6” Casters	35 ⅝”
Number of Doors	1
Depth with Door Open 90°	53 ⅛”
Door Opening	22 ⅝” x 21 ⅝”
INTERNAL DIMENSIONAL DATA	
NET Capacity (cubic ft.)	5.25
Internal Width Overall (in)	23”
Internal Depth Overall (in)	13 ⅛”
Internal Height Overall (in)	23”
Number of Shelves	2
ELECTRICAL DATA	
Full Load Amperes	2.0
REFRIGERATION DATA	
Horsepower	1/6
Capacity (BTU/Hr)	1110
Heat Rejection (BTU/Hr)	1665
Charge (lbs/grams)	0.1323/60
SHIPPING DATA	
Gross Weight - Crated	161 lbs
Height - Crated	35”
Width - Crated	23”
Depth - Crated	26”

*NOTE: Remote units are field wired and come with 6” legs.
Refrigerant must be specified at time of order.

Model Views

Required Clearance: 3 3/16” bottom & 2” rear

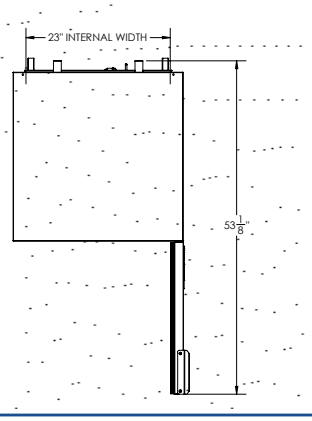

PLAN VIEW

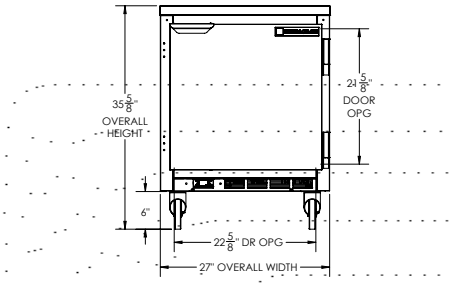

ELEVATION VIEW

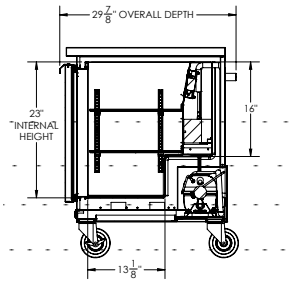

SIDE VIEW

ELECTRICAL CONNECTION



115/60/1
NEMA 5-15P

Unit pre-wired at factory and include 8’ long cord and plug set.

3779 Champion Blvd., Winston-Salem, NC 27105 1-888-845-9800 Fax: 1-336-245-6453 Beverage-Air.com Sales@bevair.com
an Ali Group Company

STAINLESS STEEL

DROP-IN SINKS

Two Compartments - FOR GENERAL PURPOSE USE

NOTE: Multi-Compartment Drop-In Sinks ARE NSF Approved when used in Mobile Food Carts and Kiosks only.

Item #: _____ Qty #: _____

Model #: _____

Project #: _____

FEATURES:

One piece seamless **Deep Drawn** sink bowl design.

All sink bowls have a large liberal radii with a minimum dimension of 2" and are rectangular in design for increased capacity.

Self-Rim Design. Mounting clips provided accommodates all thicknesses of counter. (Quantity supplied varies based on drop in sink ordered).

Includes 4" O.C. **K-50** faucet & basket drain.

CONSTRUCTION:

Bowls fabricated from one sheet of stainless steel.

All bowls are Sound Deadened.

Units feature Advance Tabco's **Smart Finish™**.

MECHANICAL:

Faucet supply is 1/2" IPS male thread.

Deck mounted faucets are furnished with aerator.

MATERIAL:

18 gauge type 304 series stainless steel.

Faucets are brass-nickel plated.

Stainless Steel 1-1/2" IPS basket drain.



STANDARD MOUNTING CLIPS

For countertops over 7/8" and up to 2" thick.

Replacement # K-28 (Per Sink)



DI-2-10



DI-2-2012



DI-2-1410



DI-2-208

Available Faucets & Accessories	Model #	Qty
Deck Mounted 8" Swing Spout. 4" O.C.	K-50	
Deck Mounted 12" Swing Spout. 4" O.C.	K-53	
Deck Mounted 8 1/2" Gooseneck. 4" O.C.	K-55	
Deck Mounted Swing w/Spray. 8" O.C.*	K-58	
Mounting Clips (Bag of 4).	K-28	

*REQUIRES **K-472** FAUCET HOLE REVISION

⚠ **WARNING:** Faucets on this page may expose you to chemicals, including lead, that are known to the State of California to cause cancer or birth defects or other reproductive harm. For more Info.,visit www.p65warnings.ca.gov.

ADVANCE TABCO SMART FABRICATION™ www.advancetabco.com

Customer Service Available To Assist You 1-800-645-3166 8:30 am - 8:00 pm E.S.T.

For Orders & Customer Service:
Email: customer@advancetabco.com or **Fax:** 631-242-6900

For Smart Fabrication™ Quotes:
Email: smartfab@advancetabco.com or **Fax:** 631-586-2933

DIMENSIONS and SPECIFICATIONS

TOL ± .125" **Supplied with K-50 Faucet & K-6 Basket Drain** ALL DIMENSIONS ARE TYPICAL

DI-2-10

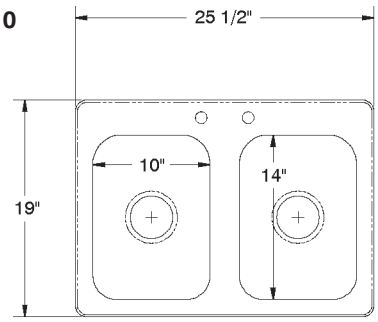

Cut-Out Size
24 3/4" X 18 1/4"
1 1/4" radius corners

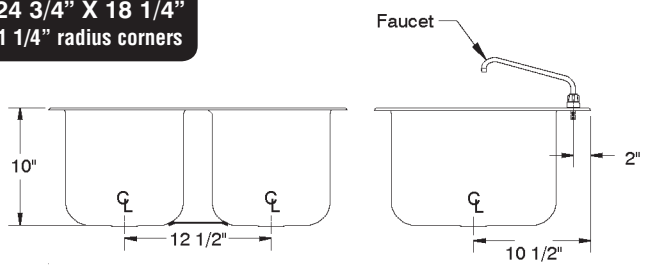

Approx. Wt. 26 lbs.

DI-2-1410

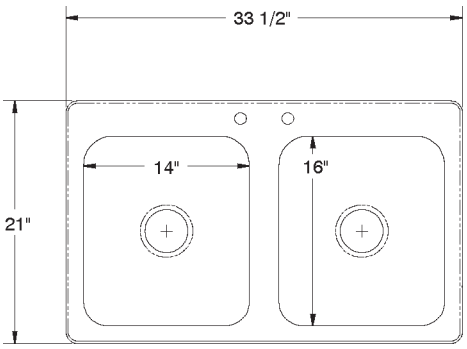

Cut-Out Size
32 3/4" X 20 1/4"
1 1/4" radius corners

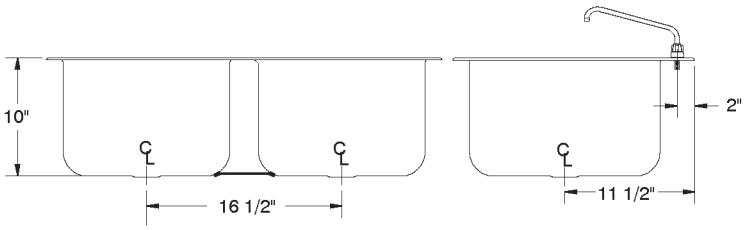

Approx. Wt. 35 lbs.

DI-2-208 & DI-2-2012

Cut-Out Size
44 3/4" X 20 1/4"
1 1/4" radius corners

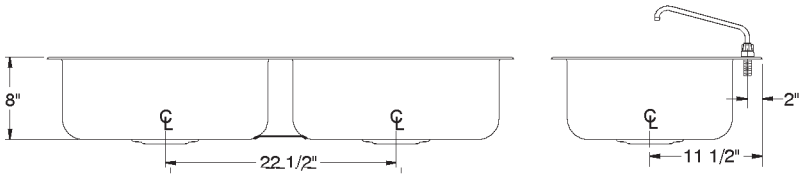

Approx. Wt. 38 lbs.

TOP VIEW

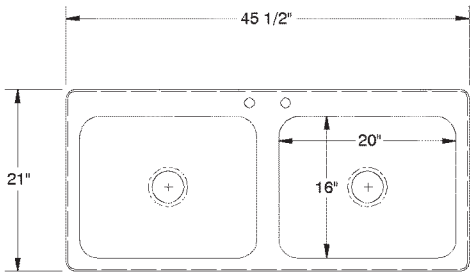

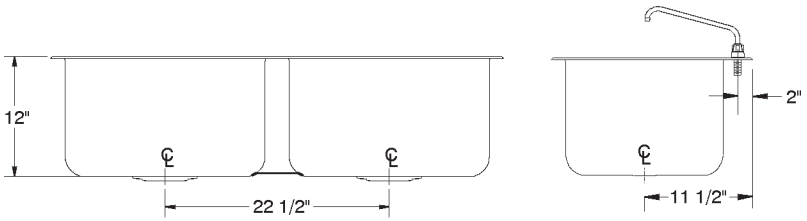

Approx. Wt. 42 lbs.

TYPICAL INSTALLATION

Cut-Out Size = L to R x F to B

Standard Mounting Clips Fit Countertops Over 7/8" & Up To 2" Thick.

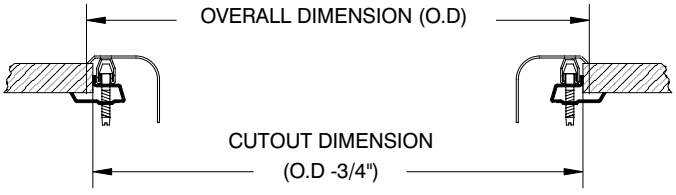

ADVANCE TABCO is constantly engaged in a program of improving our products. Therefore, we reserve the right to change specifications without prior notice.
© ADVANCE TABCO, OCTOBER 2018

Champion®
The Dishwashing Machine Specialists

Project _____
Item No. _____
Quantity _____

UL-130 UNDERCOUNTER

UL-130

Low Temperature
Undercounter
Dishwashing Machine

STANDARD FEATURES

- **Wash Refresh**™ – Automatically drains the water for the next cycle, ensuring heavily soiled items are always sanitized with new wash water
- Pumped drain
- **StemSure**™ – Soft start to protect glasses and dishes from chipping and breaking
- Door safety switch
- Low-water tank heat protection
- Built-in detergent, rinse-aid, and sanitizer dispensing pumps
- Wash pump, 1-Hp motor
- Electric tank heater
- Upper & lower interchangeable wash/rinse spray arms
- Top mounted controls
- Stainless steel top and side panels
- Single phase connection
- Stainless steel construction
- 115V power cord
- One year parts and labor warranty



Photo is for general visual representation only. Please refer to specifications for the latest detailed product information.

OPTIONS & ACCESSORIES

- ☐ **Additional Dish Racks**
  - ☐ **Peg**
  - ☐ **Flat**
- ☐ **17" Stand** Stainless Steel
- ☐ **4.5" Stand** (converts to a standard counter height)
- ☐ **8" Leg Stand**
- ☐ **1" Roller Kits available** (includes 4 casters)
- ☐ ***NEW*** **Champion ION scale prevention system**
- ☐ **Chemical alarm kit** (mounted)

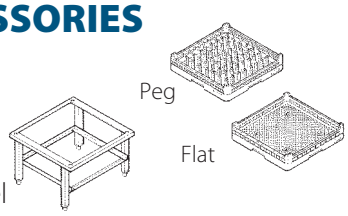

SPECIFIER STATEMENT

Specified unit will be Champion model UL-130 undercounter low temperature dishwashing machine with built-in detergent, rinse-aid, and sanitizer dispensing pumps.

Features 141 second total cycle, 1 Hp pump motor, fill and dump, pumped drain. Constructed of stainless steel.

1 year parts and labor warranty.

Note: Vent hood is not recommended, as unit does not produce excessive steam.

Note: Always follow local building code guidelines.

Champion Industries, Inc.
3765 Champion Blvd, NC 27105
Tel: 336/661-1556 Fax: 336/661-1979
www.championindustries.com

CH085
(1M) 4/21 Printed in U.S.A.

UL-130 UNDERCOUNTER

UL-130

Low Temperature
Undercounter
Dishwashing Machine

Champion®
The Dishwashing Machine Specialists

Dimensions shown in inches and [milimeters]

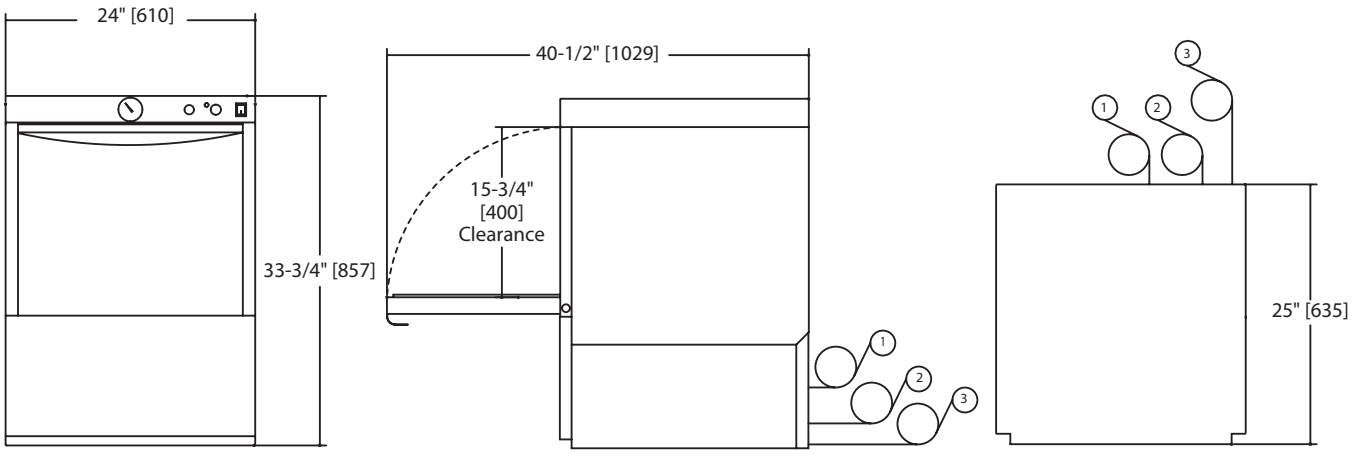

Front View **Side View** **Plan View**

Utilities

1	**Electrical** 115/60/1; 12-amp draw; to be fused at 15 amp. 4 ft. plug-in cord supplied.
2	**Water connection** 120°F minimum hot water connection (140°F recommended) 6 ft. long, 1/2" I.D. flexible fill hose with 3/4" hose connector. Flow pressure: 25-95 psi.
3	**Pumped Drain** 5/8" I.D. flexible reinforced hose, 6 ft. long. Max. drain flow 15 US gpm. Max. drain height 3 ft.

Complies with ANSI/ASSE 1440 Sections 1.4.3 & 1.4.4

	Uncrated	Crated
Height*	33-3/4"	39-1/2"
Width	24"	25"
Depth	25"	25-1/2"
Ship Wt. lbs/kg	153	173

* Front leveling feet provided.

Warning Plumbing and electrical connections should be made by qualified personnel who will observe all the applicable plumbing, sanitary and safety codes and the National Electrical Code.

SPECIFICATIONS

Capacity
Racks per hr. 25

Motor horsepower
Wash 1

Water consumption
U.S. Gal. per hr. (Max. use) 32
U.S. Gal. per rack 1.5

Temperatures °F
Wash 120°F Min (140°F recommended)
Rinse 120°F Min (140°F recommended)

Heating
Tank heat, electric (kW) .75

Time cycle in seconds
Wash 90
Rinse 26
Drain/fill 25
Total cycle 141

Standard 20" x 20" rack complement
Dish 1
Open 1

Due to an ongoing value analysis program at Champion, specifications contained in this catalog are subject to change without notice.

Champion Industries, Inc.,
3765 Champion Blvd., NC 27105
336/661-1556 • Fax: 336/661-1979
ChampionIndustries.com

an Ali Group Company
The Spirit of Excellence

John BOOS Since 1887

ITEM #: _____ QTY: _____

MODEL #: _____

PROJECT NAME: _____

030122

3601 S. Banker St. Effingham, IL 62401 • P.O. BOX 609 • Ph: (888) 431-2667 • Fax: (800) 433-2667

"PBHS-ADA" PRO-BOWL HAND SINKS

FEATURES:

- ONE PIECE DEEP DRAWN BOWL
- ALL SINK BOWLS HAVE LARGE LIBERAL RADII CORNERS
- INCLUDES BASKET DRAIN
- SPLASH MOUNT FAUCET HOLES 4" ON-CENTER
- 1-1/2" DRAIN PLUMBING CONNECTION



PBHS-ADA-P-STD

CONSTRUCTION:

- BOWL: STAINLESS STEEL TOPS ARE TIG WELDED, EXPOSED WELDS ARE POLISHED TO MATCH ADJACENT SURFACE.

MATERIAL:

- BOWL: TYPE 300 STAINLESS STEEL POLISH, SATIN FINISH
- BRACKET: TYPE 300 STAINLESS STEEL POLISH, SATIN FINISH



PBHS-W-1416ADAS



PBHS-ADA-P-STD-SSLR

PRO-BOWL HAND SINKS

MODEL #	QTY
PBHS-ADA-P-STD	
PBHS-ADA-P-STD-SSLR	
PBHS-W-1416ADAS	

-P INCLUDES SPLASH MOUNT GOOSE NECK FAUCET WITH WRIST BLADES

OPTIONAL ACCESSORIES

DESCRIPTION	QTY
FAUCETS	
SIDE SPASH	
ADA WRIST BLADES	
TOWEL DISPENSER	
LEVER WASTES	
OVER FLOWS	
P-TRAPS	

760

DETAILED SPECIFICATIONS

PBHS-ADA-P-STD

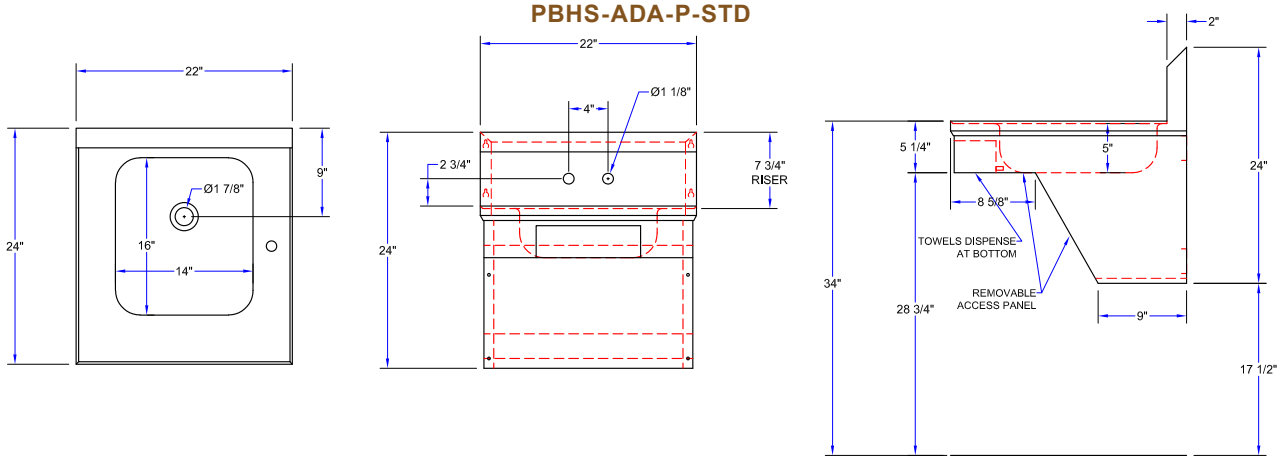

PBHS-ADA-P-STD-SSLR

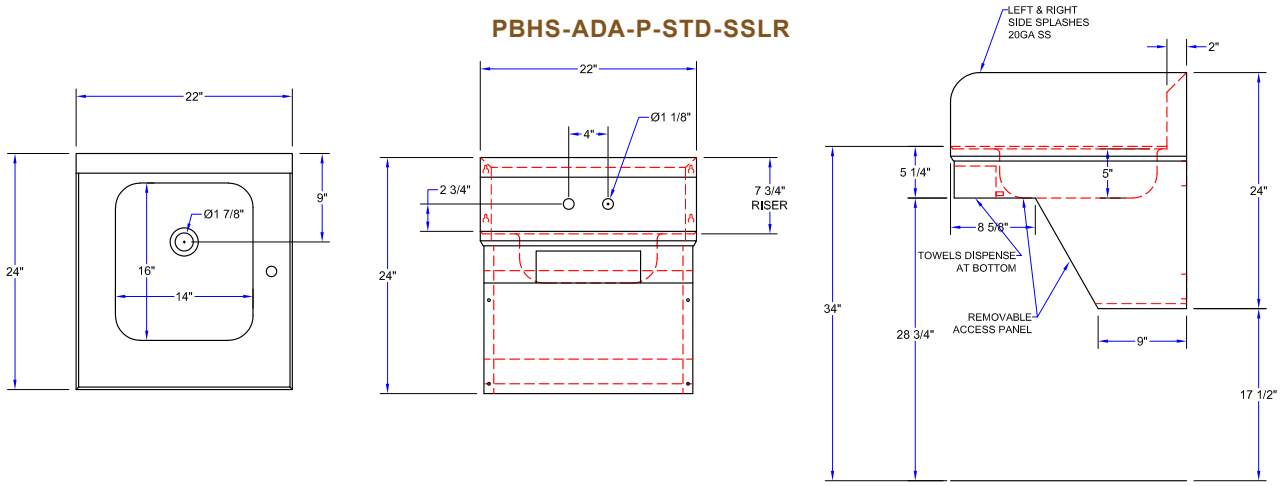

PBHS-W-1416ADAS

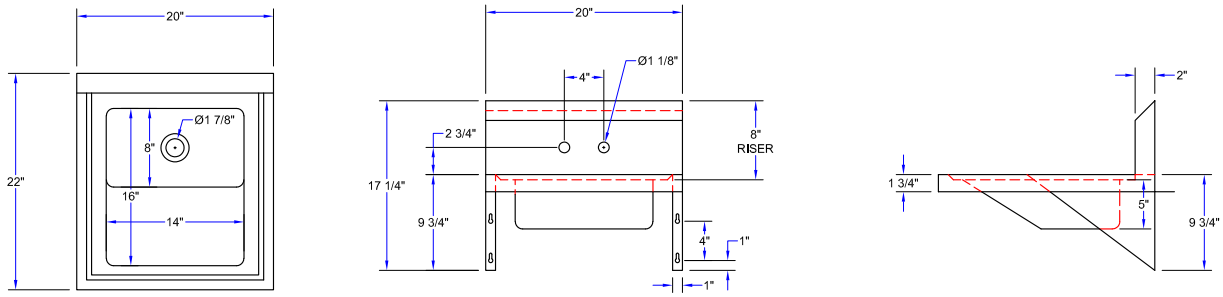

PRO-BOWL HAND SINKS

MODEL #	BOWL SIZE (LxWxD)	DRAIN SIZE	FAUCET LOCATION	SIDE SPLASH
PBHS-ADA-P-STD	14" X 16" X 5"	1-7/8"	SPLASH MOUNT - 4" ON-CENTER (REMOVEABLE FRONT PANEL. GOOSE NECK FAUCET WITH WRIST BLADES, SOAP & PAPER TOWEL DISPENSER INCLUDED)	N/A
PBHS-ADA-P-STD-SSLR	14" X 16" X 5"	1-7/8"	SPLASH MOUNT - 4" ON-CENTER (REMOVEABLE FRONT PANEL. GOOSE NECK FAUCET W/ WRIST BLADES, SOAP & PAPER TOWEL DISPENSER INCLUDED)	LH & RH
PBHS-W-1416ADAS	14" X 16" X 5"	1-7/8"	SPLASH MOUNT - 4" ON-CENTER	N/A

SOME UNITS SHIP UNASSEMBLED FOR REDUCED SHIPPING COST. ALL DIMENSIONS ARE TYPICAL. TOLERANCE +/- .500"

John Boos & Co. is constantly engaged in a program of improving products and therefore reserves the right to change specifications without prior notice.

John BOOS Since 1887

ITEM #: _____ QTY: _____

MODEL #: _____

PROJECT NAME: _____

020121

3601 S. Banker St. Effingham, IL 62401 • P.O. BOX 609 • Ph: (888) 431-2667 • Fax: (800) 433-2667

FAUCETS & PARTS


PBF-FV2-SM-35GLF


PB-KV1-SM-35GLF


PB-KV1-DM-35GLF


PB-KV2-SM-35GLF


PB-KV2-DM-35GLF


PB-WR


PB-LWR-1


PB-PT1.5


PBF-SS-6

FAUCETS & PARTS

	MODEL #	QTY	DESCRIPTION	WT.
FOOT VALVE	PBF-FV2-SM-35GLF		W/ 3-1/2" GOOSENECK SPOUT (LOW LEAD)	3
KNEE VALVE	PBF-KV1-SM-35GLF		SINGLE PEDAL, SPLASH MOUNT, 3.5" GOOSE NECK (LOW LEAD)	3
	PBF-KV1-DM-35GLF		SINGLE PEDAL, DECK MOUNT, 3.5" GOOSE NECK (LOW LEAD)	2.5
	PBF-KV2-SM-35GLF		DOUBLE PEDAL, SPLASH MOUNT, 3.5" GOOSE NECK (LOW LEAD)	2
	PBF-KV2-DM-35GLF		DOUBLE PEDAL, DECK MOUNT, 3.5" GOOSE NECK (LOW LEAD)	4
WRIST BLADES	PB-WR		ADA, STAINLESS STEEL, (1 PAIR), USE W/ HEAVY DUTY FAUCETS ONLY	1
TWIST ACTION LEVER DRAINS	PB-LWR-1		FITS 3-1/2" DRAIN OPENING, 2" OUTLET	4
	PB-LWR-1OV		FITS 3-1/2" DRAIN OPENING, 2" OUTLET, W/ OVERFLOW	4
STRAIGHT ACTION LEVER DRAINS	PB-LWS-1		FITS 3-1/2" DRAIN OPENING, 2" OUTLET	4
	PB-LWS-1OV		W/ OVERFLOW, FITS 3-1/2" DRAIN OPENING	4
P-TRAPS	PB-PT1.5		FOR HAND SINKS, P-TRAP 1-1/2" & TAIL PIPE	7
MOP SINK FAUCET	PBF-SS-6		VACUUM BREAKER NOZZLE W/ 3-4" GARDEN HOSE THREAD, PAIL HOOK, TOP SUPPORT ARM, 1/2" NPT FEMALE FLANGED, W/ ADJUSTABLE INLET W/ SCREWDRIVER STOP	5
MOUNTING KIT	PB-DMMK		FOR DECK MOUNT, INCLUDES (2) 1/2" SUPPLY NIPPLES, (2) RETAINER NUTS, (2) LOCK WASHERS & (2) RUBBER WASHERS	1
	PB-SMMK-90		FOR SPLASH MOUNT, INCLUDES (2) 1/2" SUPPLY NIPPLES, (2) RETAINER NUTS, (2) LOCK WASHERS, (2) RUBBER WASHERS & (2) MALE & FEMALE SHORT 90° ELBOWS	1

SOME UNITS SHIP UNASSEMBLED FOR REDUCED SHIPPING COST. ALL DIMENSIONS ARE TYPICAL. TOLERANCE +/- .500"

John Boos & Co. is constantly engaged in a program of improving products and therefore reserves the right to change specifications without prior notice.

John BOOS Since 1887

ITEM #: _____ QTY: _____

MODEL #: _____

PROJECT NAME: _____

020121

3601 S. Banker St. Effingham, IL 62401 • P.O. BOX 609 • Ph: (888) 431-2667 • Fax: (800) 433-2667

FAUCETS & PARTS


PBF-FV2-SM-35GLF


PB-KV1-SM-35GLF


PB-KV1-DM-35GLF


PB-KV2-SM-35GLF


PB-KV2-DM-35GLF


PB-WR


PB-LWR-1


PB-PT1.5


PBF-SS-6

FAUCETS & PARTS

	MODEL #	QTY	DESCRIPTION	WT.
FOOT VALVE	PBF-FV2-SM-35GLF		W/ 3-1/2" GOOSENECK SPOUT (LOW LEAD)	3
KNEE VALVE	PBF-KV1-SM-35GLF		SINGLE PEDAL, SPLASH MOUNT, 3.5" GOOSE NECK (LOW LEAD)	3
	PBF-KV1-DM-35GLF		SINGLE PEDAL, DECK MOUNT, 3.5" GOOSE NECK (LOW LEAD)	2.5
	PBF-KV2-SM-35GLF		DOUBLE PEDAL, SPLASH MOUNT, 3.5" GOOSE NECK (LOW LEAD)	2
	PBF-KV2-DM-35GLF		DOUBLE PEDAL, DECK MOUNT, 3.5" GOOSE NECK (LOW LEAD)	4
WRIST BLADES	PB-WR		ADA, STAINLESS STEEL, (1 PAIR), USE W/ HEAVY DUTY FAUCETS ONLY	1
TWIST ACTION LEVER DRAINS	PB-LWR-1		FITS 3-1/2" DRAIN OPENING, 2" OUTLET	4
	PB-LWR-1OV		FITS 3-1/2" DRAIN OPENING, 2" OUTLET, W/ OVERFLOW	4
STRAIGHT ACTION LEVER DRAINS	PB-LWS-1		FITS 3-1/2" DRAIN OPENING, 2" OUTLET	4
	PB-LWS-1OV		W/ OVERFLOW, FITS 3-1/2" DRAIN OPENING	4
P-TRAPS	PB-PT1.5		FOR HAND SINKS, P-TRAP 1-1/2" & TAIL PIPE	7
MOP SINK FAUCET	PBF-SS-6		VACUUM BREAKER NOZZLE W/ 3-4" GARDEN HOSE THREAD, PAIL HOOK, TOP SUPPORT ARM, 1/2" NPT FEMALE FLANGED, W/ ADJUSTABLE INLET W/ SCREWDRIVER STOP	5
MOUNTING KIT	PB-DMMK		FOR DECK MOUNT, INCLUDES (2) 1/2" SUPPLY NIPPLES, (2) RETAINER NUTS, (2) LOCK WASHERS & (2) RUBBER WASHERS	1
	PB-SMMK-90		FOR SPLASH MOUNT, INCLUDES (2) 1/2" SUPPLY NIPPLES, (2) RETAINER NUTS, (2) LOCK WASHERS, (2) RUBBER WASHERS & (2) MALE & FEMALE SHORT 90° ELBOWS	1

SOME UNITS SHIP UNASSEMBLED FOR REDUCED SHIPPING COST. ALL DIMENSIONS ARE TYPICAL. TOLERANCE +/- .500"

John Boos & Co. is constantly engaged in a program of improving products and therefore reserves the right to change specifications without prior notice.

APPENDIX B – GEOTECHNICAL INVESTIGATION

END OF SECTION

GEOTECHNICAL INVESTIGATION
FERNLEY DEPOT RESTROOM FACILITIES
675 EAST MAIN STREET
FERNLEY, NEVADA

JANUARY 10, 2019

Prepared for:

Derek W. Starkey, P.E.
City Engineer
City of Fernley Public Works Department
595 Silver Lace Blvd.
Fernley, Nevada 89408

Prepared By:

Resource Concepts, Inc.
340 N. Minnesota Street
Carson City, Nevada 89703

www.rci-nv.com

Resource Concepts Inc

January 10, 2019

Derek W. Starkey, P.E.
City Engineer
City of Fernley Public Works Department
595 Silver Lace Blvd.
Fernley, Nevada 89408

SUBJECT: ***GEOTECHNICAL INVESTIGATION***
FERNLEY DEPOT RESTROOM FACILITIES
675 EAST MAIN STREET
GEOTECHNICAL INVESTIGATION REPORT

Dear Mr. Starkey:

In accordance with your request, we are submitting our Geotechnical Investigation for the restroom facilities of the Fernley Depot at 675 East Main Street in Fernley. Our work is intended for the sole and exclusive use of the City of Fernley Public Works Department, their agents, or designated representatives.

In our opinion, there are no significant geotechnical constraints, which would preclude the proposed construction of the project, provided the recommendations of this report are incorporated by design into the final plans and specifications.

We appreciate the opportunity to work with you on this project. Should you have questions concerning the contents of this report, or if we may be of further service, please contact the undersigned at your convenience.

Sincerely,

RESOURCE CONCEPTS, INC.



1-10-2019

Gary Luce, PE
Senior Geotechnical Engineer

Ryan Berg

Ryan Berg, EI
Geotechnical Engineering Intern

CARSON CITY
340 North Minnesota St.
Carson City, NV 89703-4152
(775) 883-1600 • fax: (775) 883-1656

Engineering • Surveying • Water Rights
Resources & Environmental Services
www.rci-nv.com

LAKE TAHOE
276 Kingsbury Grade, Ste. 206, Stateline, NV
PO Box 11796, Zephyr Cove, NV 89448-3796
(775) 588-7500 • fax: (775) 589-6333

TABLE OF CONTENTS

1.0 INTRODUCTION 1

2.0 SCOPE OF SERVICES 1

3.0 PROJECT DESCRIPTION 1

3.1 Project Overview 1

4.0 GEOLOGY 2

4.1 Regional and Site Geology 2

5.0 SOIL AND GROUNDWATER CONDITIONS 2

5.1 General 2
5.2 Soil Conditions 2
5.3 Groundwater 3
5.4 Laboratory Test Results 3

6.0 GEOLOGIC HAZARDS 3

6.1 Faulting 3
6.2 Liquefaction 4
6.3 Landslides and Slope Stability 4
6.4 Expansive and Collapsible Soils 4
6.5 Flood and Debris Flow Hazards 4

7.0 CONCLUSIONS AND RECOMMENDATIONS 5

7.1 General 5
7.2 Seismic Design Criteria 5
7.3 Soil Handling, Excavation and Grading 5
7.4 Building Pad, Parking Lot Preparation and Fill Placement 6
7.5 Foundation Design Criteria 7
7.6 Grading – Underground Utilities 8
7.7 Grading – Pavement and Flatwork Areas 8
7.8 Slabs-on-Grade 9
7.9 Pavement 10
7.10 Site Drainage 11

8.0 FURTHER GEOTECHNICAL SERVICES 11

8.1 Plan and Specification Review 11
8.2 Testing and Observation Services 11

9.0 LIMITATIONS AND UNIFORMITY OF CONDITIONS 11

10.0 REFERENCES 13

FIGURES

Figure 1 Vicinity Map
Figure 2 Site Plan
Figure 3 Geologic Map
Figure 4 Soils Map
Figure 5 Fault Map
Figure 5 Flood Hazards Map

APPENDICES

Appendix A Field Investigation
Appendix B Laboratory Testing

1.0 INTRODUCTION

This report presents the findings and conclusions of our geotechnical investigation for the proposed restroom facilities of the Fernley Depot at 675 East Main Street in Fernley. The "Site" is located adjacent to the existing Fernley Depot at 675 East Main Street, Fernley, Nevada. The Site location is shown on the project Vicinity Map, Figure 1. It is our understanding that the client is considering pre-manufactured building options at the time of this report.

2.0 SCOPE OF SERVICES

Our scope of services for our geotechnical investigation included:

- Performed site reconnaissance and marked the proposed exploratory test pit locations in the field with white paint for underground utility location purposes.
- Reviewed in house files of prior geotechnical work in the area.
- Observed the excavation of three exploratory test pits (TP-1 through TP-3) at the Site. The test pits were excavated with a rubber-tired backhoe equipped with an 18-inch bucket to depths ranging from approximately nine to ten feet below the existing ground surface (bgs).
- Logged the test pits in general accordance with the Unified Soil Classification System (USCS).
- Obtained bulk samples from the test pits.
- Transported soil samples to our Carson City geotechnical laboratory for testing and additional analyses.

Logs of the exploratory test pits and other details of the field investigation are included in Appendix A. Details of the laboratory testing program including test results are included in Appendix B.

To aid in preparing this report, we reviewed the following documents:

- *U.S. Geological Survey, Geologic Map of Lyon, Douglas, and Ormsby Counties, Nevada 1969,* Nevada Bureau of Mines and Geology.
- *Site Location Layout,* City of Fernley Public works, December 2018.
- *Flood Insurance Rate Map Fernley, Nevada* FEMA, October 2017.
- *Soil Survey of Fernley Area, Nevada,* Natural Resources Conservation Service Website (http://websoilsurvey.sc.egov.usda.gov/App/HomePage.htm).
- *Quaternary fault and fold database for the United States,* accessed February 2018 from USGS web site: http://earthquake.usgs.gov/hazards/qfaults/map/#qfaults/.

3.0 PROJECT DESCRIPTION

3.1 Project Overview

The location of the project is 675 East Main Street in Fernley, Nevada at the historic Fernley and Lassen Railway Depot. The restroom project as currently proposed includes the construction of ADA compliant

restrooms, an asphalt concrete paved path connecting to the existing building and associated landscaping.

Underground utilities serving the site area include power, gas, water and sewer. Main lines are located along East Main Street to the North of the Site and along Lois Lane to the east of the Site.

The topography of the Site is generally flat lying. Topography consists of a gentle slope to the southeast (1%-2%). Vegetation on the Site consists of tumbleweeds and native grasses in the southern portion of the Site with landscaped grass and trees on the north side of the existing building. The average elevation of the Site is 4,161 feet.

The purpose of our investigation was to characterize subsurface conditions within the project area as they relate to the proposed construction. The recommendations presented herein are based on the analyses of the data obtained from exploratory samples, laboratory tests, engineering analyses, and our local experience with similar soil and geologic conditions. Based on our investigation and analyses we provide recommendations for: site grading, building foundation construction, seismic design parameters, underground utility installation, flexible pavement driveway and parking lot sections, concrete flatwork placement recommendations, and erosion control criteria.

4.0 GEOLOGY

4.1 Regional and Site Geology

The geology of the Site is referenced from the 1969 U.S. Geological Survey, Geologic Map of Lyon, Douglas, and Ormsby Counties, Nevada, Figure 3. The City of Fernley area in Lyon county is a large valley typical of the western edge of the Basin and Range geomorphic province. The Basin and Range topography is the result of extension of the crust over approximately the past 10 million years. The geologic map indicates the project Site is predominantly underlain by older Quaternary lake deposits of glacial Lake Lahontan. These deposits are described as stratified layers of silty sands, silts and clays.

5.0 SOIL AND GROUNDWATER CONDITIONS

5.1 General

The following soil descriptions include the USCS symbol where applicable. Appendix A contains the test pit logs for reference to the vertical extents of the materials encountered at each location. Figure 2, the Site Plan shows the locations of our test pit explorations.

5.2 Soil Conditions

According to data from the soil survey of the Fernley Area, Nevada accessed in December 2018, the Site soils to five feet below the surface are partially mapped as “Lahontan silty clay loam (Unit 103),” and “Saralegui loamy sand (Unit 209).” The Unified Soils Classification System (USCS) rating from the survey website classified these native soils as silty sand (SM). The soil unit distribution and description of the Site is illustrated on the Soils Map, Figure 4.

Test pit soil descriptions show the majority of site surface soils are granular varieties dominated by silty sand (SM). In test pits TP-2 and TP-3 at depths of approximately 2.5 feet to 5.5 feet the silt contents were very high bordering on their classification as sandy silts (ML).

5.3 Groundwater

No groundwater or indications of high groundwater or perched groundwater were observed in the borings. Groundwater in the area of the Site is likely to be in the range of fifty to a hundred feet or more below the natural grade.

5.4 Laboratory Test Results

Laboratory tests are in general conformance with accepted test methods of the American Society for Testing and Materials (ASTM). Appendix B presents moisture content and grain-size distribution results. Moisture and fines content (percent passing #200 sieve) are also shown on the test pits logs.

The types and numbers of the tests performed are summarized in Table 5.4:

Table 5.4
Summary of Laboratory Tests

Test	Procedure	Number of Tests
Moisture Content	ASTM D 2216	5
Grain Size Analysis	ASTM D 422	5
pH	SW-846 9045D	1
Resistivity	ASTM G57	1
Sulfate	ASTM 1580C	1

6.0 GEOLOGIC HAZARDS

6.1 Faulting

The city of Fernley is located near active faults, which are capable of producing significant ground motions due to seismic events. Figure 5, the Fault Map for the site vicinity shows the distribution of active faults in the area. Based on the U.S. Geological Survey, 2008 Quaternary fault and fold database for the United States, faults considered active for the type of development planned are located near but not on the project site. The USGS shows that the nearest active faults to the Site are located approximately 1.2-miles west of the Site. These faults are a part of the Walker Lane seismic belt. Locally this portion of the seismic belt is referred to as the Pyramid Lake fault zone. Faults along this zone are estimated to be capable of earthquake of Richter magnitude 7.0. These values are equivalent to Modified Mercalli Intensities of X (ten) or greater.

The seismic risk at the Site is not significantly greater than that of the surrounding developments and the Fernley area in general. We recommend that seismic design of the structures be in accordance with the latest version of the International Building Code (IBC) and the American Society of Civil Engineers (ASCE) Standard 7-10. Site-specific acceleration information presented in Table 6.1 below is from the OSHPD Earthquake Hazards Program (https://seismicmaps.org/) which reflects the 2012 version of the IBC as well as the ASCE Standard. Input coordinates of (39.6054918, -199.2376362) were used for the seismic design.

Information derived from the USGS website is shown in Table 6.1 below**.**

Table 6.1 Reference
2012 IBC Seismic Design Parameters

Parameter	Factors	IBC Reference
Site Class	D	Table 20.3-1
Spectral Acceleration	S_s = 1.322 S_1= 0.496	Figure 1613.3.1 (1) Figure 1613.3.1 (2)
Seismic Coefficient, F_a	F_a = 1.000	Table 1613.3.3 (1)
Seismic Coefficient, F_v	F_v = 1.504	Table 1613.3.3 (2)
Adjusted Spectral Response, S_{MS}, S_{MI}	S_{MS} = 1.322 S_{MI} = 0.746	Equation 16-37 Equation 16-38
Design Spectral Acceleration, S_{DS}, S_{D1}	S_{DS} = 0.881 S_{D1} = 0.497	Equation 16-39 Equation 16-40

6.2 Liquefaction

Strong vibratory motions such as those generated by earthquakes may cause liquefaction of granular soils. Soils that are highly susceptible to liquefaction are loose, granular and saturated. Liquefaction of soils may cause surface distress, loss of bearing capacity, and settlement of structures. Liquefaction is generally accepted to be restricted to within 50 feet of the surface due to confining pressures. The subject property does not exhibit subsurface geologic conditions that indicate susceptibility to liquefaction.

Lateral spreading is a ground-failure phenomenon that can also occur in association with liquefaction, whereby lateral displacements occur at the ground surface. Conditions required for lateral spreading include gently sloping terrain, and in particular, where a “free-face” (such as a creek bank) is nearby. Based on our review of the site topography and depth to the liquefiable layers, the potential for lateral spreading to occur is low.

6.3 Landslides and Slope Stability

Topographically, the Site is relatively flat. No landslides features are present at the Site or on adjacent properties that may affect the Site, and we do not consider the potential for land sliding to be a hazard to this project.

6.4 Expansive and Collapsible Soils

No expansive or collapsible soils were identified on the Site during our investigation.

6.5 Flood and Debris Flow Hazards

Review of the FIRM flood maps issued in October 2017 for the City of Fernley indicates that the Site is located in Flood Zone X or areas of minimal flooding. The Site is not located within areas within the 1.0 percent annual chance of flooding as shown on the Flood Hazards Map, Figure 6. Therefore, concerns for flooding or debris flows at the Site are considered very low.

7.0 CONCLUSIONS AND RECOMMENDATIONS

Our conclusions and recommendations, based on our investigation conducted in November and December of 2018 follow:

7.1 General

7.1.1 Based upon the results of this investigation, the Site is suitable for the proposed development, provided the recommendations presented herein are implemented in the design and construction of the project.

7.1.2 Our field investigation indicates that the Site is primarily underlain by native aeolian and alluvial deposits of sand and silt. The deposits are dominantly silty sand to sandy silt with or without gravel extending to the total depth explored. In test pit TP-1, a thin layer of clayey sand (SC) was encountered.

7.1.3 Soil Conservation Service data and our local experience indicate that site soils are not aggressive for either Type II or Type IP concrete. However, site soils are moderately aggressive (corrosive) to very aggressive for uncoated steel. The project structural engineer should consider the use of coatings or other cathodic protection where uncoated steel may be in contact with saturated or very moist soils.

7.2 Seismic Design Criteria

7.2.1 The Site is located near faults capable of generating strong seismic shaking during the life of the project.

7.2.2 The Site is Site Class D or “very stiff soil profile” as defined by the 2012 IBC and as indicated by samples obtained during our investigation.

7.2.3 Structures should be designed in accordance with 2012 IBC Seismic requirements. Seismic design criteria obtained in accordance with the 2012 IBC/ASCE 7-10 are presented in Section 6.1 of this report.

7.2.4 Conformance to the criteria presented in Table 6.2 for seismic design does not constitute a guarantee or assurance that significant structural damage or ground failure will not occur if a maximum level earthquake occurs. The primary goal of seismic design is to protect life by avoiding building collapse and not to avoid structural damage entirely.

7.3 Soil Handling, Excavation and Grading

7.3.1 A preconstruction conference should be held at the Site prior to the beginning of grading operations with the owner, contractor, civil engineer and geotechnical engineer in attendance. Soil handling and grading requirements can be discussed at that time.

7.3.2 Site preparation should begin with the removal of brush, organic matter and debris spoils scattered throughout the Site. Prior to the commencement of grading, all domestic debris and refuse should be removed from the Site and disposed of as appropriate. The depth of removal should be such that material exposed in the cut areas or soils to be used as fill is relatively free of organic matter. It is estimated that grubbing depths will range from two to four inches in depth. Material generated during stripping is not suitable for use in structural areas but may be placed in landscaped or other non-structural areas if deemed suitable for the specific application.

7.3.3 All references to relative compaction and optimum moisture content in this report are based on the ASTM D1557 Test Procedure (Modified Proctor test).

7.3.4 Earthwork operations should be observed, and compacted fill tested by an RCI representative.

7.3.5 In our opinion, grading and excavations may be accomplished with light to moderate effort with conventional heavy-duty grading/excavation equipment. Excavations in native soils are not anticipated to generate significant quantities of oversized material (greater than six inches in dimension) that will require special handling or exporting from the Site.

7.3.6 Most near surface native soils are anticipated to be suitable for re-use as engineered. Soils with high silt contents below approximately two feet are not suitable as structural fill due to the high fines contents. Blending of the high silt content soils may be possible in order to meet structural fill requirements but is not considered practical due to the small scale of the project.

7.3.7 Imported structural fill material should meet the Standard Specifications for Public Works specifications (304.03). Structural fill is defined herein as all fill placed within three feet of foundations and all fill placed beneath pavement and flatwork sections. Import structural fill material should be sampled and approved by RCI prior to its transportation to the Site.

7.3.8 Temporary excavations, such as utility trench sidewalls excavated within undisturbed, unsaturated native soils or structural fill should remain near-vertical to depths of four feet. Some minor sloughing should be expected within some of the cleaner sand lenses or during periods of high precipitation. On-site imported or native soils and structural fill soils should be considered Type C by OSHA Standards in light of their sandy, locally cohesionless nature. It is the contractor's responsibility to provide sufficient and safe excavation support per OSHA Standards as well as protecting nearby utilities, structures, and other improvements, which may be damaged by earth movements.

7.3.9 During or immediately following wet weather, the near-surface soil or the bottom of overexcavated areas if left unprotected may deflect or pump under heavy equipment loads. Yielding soil conditions can typically be stabilized using one of the methods listed below. However, soil conditions and mitigation methods should be reviewed and approved by RCI when encountered.

- **Option 1.** Deeply scarify (10 to 12 inches) allow to air dry to near optimum moisture content and re-compact.
- **Option 2**. Remove unstable (wet) soils to a firm base and allow the wet subgrade soil to dry to near optimum moisture content and re-compact. Replace the removed soils with drier soil meeting the structural fill specifications.

Other stabilization alternatives may be appropriate depending on the situation. Consultation with RCI is crucial for expedient and appropriate mitigation.

7.4 Building Pad, Parking Lot Preparation and Fill Placement

7.4.1 For the purposes of this report, the structural building pad area should extend a minimum of four feet beyond the outside dimensions of the building.

7.4.2 Prior to fill placement, exposed surfaces should be scarified at least eight inches, moisture-conditioned to near optimum moisture content, and compacted to at least 90% relative compaction.

7.4.3 Structural fill should be placed in thin lifts (un-compacted thickness of eight inches or less), moisture-conditioned to near optimum moisture content, and compacted to at least 90% relative compaction prior to placement of the next lift. Depending on the type of equipment utilized by the contractor thicker lifts may be approved by the project geotechnical engineer upon request.

7.4.4 Soils utilized as fill within the building, flatwork, and parking areas should meet the *Standard Specifications for Public Works Construction(SSPWC)* minimum requirements for structural fill.

Table 7.4.4
SSPWC Structural Fill Requirements

Sieve	Percent Passing
4-inch	100
3/4-inch	70-100
No. 40	15-65
No. 200	5-20
Liquid Limit	35 Max.
Plasticity Index	12 Max.
R-value	30 Min.

7.5 Foundation Design Criteria

At the time of this report, no information on structural systems or details were available and therefore these recommendations should be considered preliminary.

7.5.1 Conventional foundations should consist of continuous perimeter strip (or spread) footings and isolated interior spread footings.

7.5.2 Where curtain walls (or frost walls) are employed they should be a minimum of six inches wide and extend to a minimum of 18 inches below exterior grade for frost protection.

7.5.3 Perimeter continuous footings should extend at least 18 inches below lowest adjacent exterior grade bearing on compacted native soils or structural fill. These embedment recommendations are crucial for frost protection, minimizing surface water intrusion, to develop bearing capacity, and to provide lateral force resistance. Final surface grading should provide for positive drainage away from the structure per the 2012 IBC. Footing and retaining wall foundation backfill should be compacted to at least 90% relative compaction.

7.5.4 Shallow perimeter foundations or column footings proportioned as recommended above may be designed for allowable soil bearing pressures of 2,500 pounds per square foot (psf) when founded on compacted native sandy soils or structural fill.

7.5.5 All allowable bearing values may be increased by one-third when considering transient loading due to wind or seismic forces.

7.5.6 Adjacent utilities should not be constructed in the zone of influence parallel to footings. The zone of influence may be taken to be the area beneath the footing and within a 1:1 plane

extending out and down from the bottom of the footing. Utility penetrations into the building envelope should be made perpendicular to the building stem wall (or curtain wall) if possible.

7.5.7 Post-construction total and differential settlements under static loading conditions are estimated to be less than 1 inch and 3/4 inch respectively.

7.5.8 The passive pressure used to resist lateral movement of conventional footings may be assumed to be equal to a fluid weighing 250 pounds per cubic foot (pcf). The coefficient of friction to resist sliding is 0.35 for concrete against native or structural fill soils. Combined passive resistance and friction may be utilized for design provided that the frictional resistance is reduced by 50%. For shallow footings near the ground surface (if any), the upper six inches of exterior embedment should not be included in calculations for resistance to lateral loads.

7.5.9 Foundation reinforcement should be designed by the project structural engineer.

7.6 Grading – Underground Utilities

7.6.1 Underground utility trenches within structural areas (building pads, parking lots, and streets) should be backfilled with properly compacted qualified material for use as bedding or backfill.

7.6.2 The majority of native soils have excessive amounts of fines to qualify for use as utility trench bedding. Importation of Class A bedding for utilities should be anticipated. Most material excavated from the trenches is anticipated to be adequate for on-site use as Class E backfill provided it does not contain clay, deleterious matter, vegetation or rock larger than six inches in maximum dimension.

7.6.3 Trench backfill should be placed in loose lifts not exceeding eight inches. The lifts should be compacted to a minimum of 90% relative compaction at or near optimum moisture content.

7.6.4 Bedding and pipe zone backfill should extend from the bottom of the trench excavation to a minimum of six inches above the crown of the pipe. Pipe bedding material should consist of Class A backfill material as defined by the Standard Specifications for Public Works. Bedding and pipe zone material should be hand compacted in 6-inch maximum lifts.

7.7 Grading – Pavement and Flatwork Areas

7.7.1 Both pavements and flatwork should be underlain by a minimum of six inches of aggregate base or structural fill to provide support and frost protection.

7.7.2 Soils exposed at the bottom of the excavation should be scarified six inches and compacted to a minimum of 90% relative compaction at or near optimum moisture content. If the surface has become dry and loose, it should be moisture conditioned and lightly compacted to a firm surface prior to the placement of additional fill or aggregate base.

7.7.3 The subgrade soils for pavements should be finished to a compacted smooth unyielding surface. We recommend proof-rolling the subgrade with a loaded water truck (or similar equipment) to verify the stability of the subgrade prior to placing aggregate base.

7.7.4 Aggregate base used to support pedestrian and vehicular pavements should be compacted to a minimum of 95% relative compaction.

7.8 Slabs-on-Grade

Conventional concrete slab-on-grade recommendations presented herein are intended to reduce the potential for cracking of slabs as a result of differential movement. However, even with the incorporation of the recommendations presented herein, slabs-on-grade will still exhibit some cracking. The occurrence of concrete shrinkage cracks is independent of the soil supporting characteristics. Their occurrence may be reduced and/or controlled by limiting the slump of concrete, the use of crack control joints and proper concrete placing and curing. Adherence to ACI and Portland Concrete Association (PCA) recommendations including those for low humidity and wind, if applicable, should be incorporated into project construction practices.

7.8.1 Slab floors are suitable for the buildings if prepared as recommended in Section 7.7. A minimum 10-mil-thick vapor retarder meeting ASTM E1745-97 Class C requirement shall be placed below the slab where interior moisture is considered undesirable. At a minimum, one-inch (minimum) layers of clean sand should be provided above and below the vapor barrier material so as to protect it from puncture or damage. To reduce the potential for punctures, a higher quality vapor retarder (15 mil. Class A or B) may be used. The vapor retarder, if used, should extend to the edges of the slab, and should be sealed at all seams and penetrations. In any case, care should be taken to avoid any disturbance or rupture to the water-proofing measures throughout the construction process.

7.8.2 Slab floors should be underlain by a minimum of six inches of compacted (95% minimum relative density) aggregate base. Slab thickness and reinforcement should be determined by the structural engineer based on the anticipated loading.

7.8.3 If a significant amount of time has passed since building pad grading and the soil surface of the building pad has become dry, then it should be re-moistened prior to placing the moisture retarding system. The building pad should be moistened by soaking or sprinkling such that the upper 12 inches of soil is near optimum moisture, as determined by an RCI representative at least 48 hours before concrete placement.

7.8.4 Some floor coverings, such as tile or linoleum, are sensitive to moisture that can be transmitted from and through the slab. Slab floors should be moist cured for a minimum of seven days prior to placing any floor coverings. Floor coverings should be installed in accordance with the manufacturer's recommendations including any moisture transmissivity testing requirements.

7.8.5 A modulus of subgrade reaction (k) of 250 pounds per cubic inch (pci) is recommended for the structural design of slabs. This value assumes contact with the sand or aggregate base materials.

7.8.6 Crack control spacing should be determined by the project structural engineer based on slab thickness and intended usage.

7.8.7 All exterior concrete should be air entrained with from 4.5% to 7.0% air content. The water cement ratio for all exterior concrete should be 0.45 or less. The use of mid-range plasticizer is recommended to facilitate the finishing process while maintaining the desired water cement ratio.

7.8.8 Exterior concrete should be placed and finished in accordance with American Concrete Institute (ACI) recommendations for concrete placed in areas subject to freeze-thaw environments.

7.9 Pavement

7.9.1 Pavement sections are intended for on-site use only. Pavement sections are based on Asphalt Institute recommendations for parking areas subject to automobile and truck traffic.

7.9.2 The following preliminary asphalt concrete pavement section is recommended for design to establish subgrade elevations for pedestrian walkways parking areas and driveways.

Table 7.9.2
Preliminary Flexible Pavement Sections*

	AC Thickness (inches)	AB Thickness (inches)
Pedestrian Walkways, Automobile Parking and Driveway Areas	3.0	6.0
Driveways Subject to Truck Traffic and Dumpster Areas	4.0	8.0

***No automobile parking or driveway areas are envisioned for the current project however it is our understanding that they may be added at a future date.**

The preliminary pavement section is based on the following assumptions:

- The subgrade soil has an R-Value of 30 or higher.
- The Type 2, Class B Aggregate Base (AB) has a minimum R-Value of 70 and meets the requirements of the *Standard Specifications for Public Works Construction*.
- The aggregate base is compacted to 95% or higher relative compaction at or near optimum moisture content.
- Soil subgrade has been prepared as previously recommended.
- Asphalt concrete should conform to Section 320.02 of the *Standard Specifications for Public Works Construction*.

It is recommended that the use of 64PG-NV (polymerized asphalt oil or equivalent) be considered as we have found that it substantially reduces cracking due to thermal stresses prevalent in the freeze thaw environment of this area. The savings in long-term maintenance of the pavement, including crack sealing, is in our opinion worth the extra expense. However, this recommendation is optional in that it is relative to frequency of maintenance only and does not affect structural calculations.

7.9.3 If Portland Concrete Cement (PCC) driveways or pedestrian walkways are required, they should be constructed as shown in Table 7.9.3 below.

Table 7.9.3
PCC Pavement Sections

Location	PCC Thickness (inches)	AB Thickness (inches)
Automobile Parking Areas and Driveways	5.0	6.0
Pedestrian Walkways	4.0	6.0

- Subgrade soils should be compacted to a minimum of 90% of maximum dry density. Aggregate base should be compacted to at least 95% of maximum dry density.
- The minimum compressive strength (28-day) should be at least 4,000 psi and meet the requirements stated in Section 7.8 of this report as appropriate. Traffic on the slab should be avoided until at least 80% of the design strength has been verified by testing. Reinforcement of the PCC driveways should be specified by the project structural (or civil) engineer.
- Construction (or crack control) joints should also be as recommended by the project structural (or civil) engineer.

7.10 Site Drainage

7.10.1 Adequate drainage is crucial to reduce the potential for differential soil movement, erosion and subsurface seepage. Under no circumstances should water be allowed to pond adjacent to footings. The Site should be graded and maintained such that surface drainage is directed away from structures and the top of slopes into swales or other controlled drainage devices. The percent fall of slopes around structures should be as per the most current version of the IBC as adopted by the local governing agency.

7.10.2 Roof and pavement drainage should be directed into conduits to carry runoff away from the structures. Landscape irrigation should be kept at least three feet away from all foundations. We recommended that drip irrigation be installed within six feet of foundations wherever feasible.

8.0 FURTHER GEOTECHNICAL SERVICES

8.1 Plan and Specification Review

We should review the improvement plans, foundation plans, and specifications prior to final design submittal to assess whether our recommendations have been properly implemented and evaluate if additional analysis and/or recommendations are required.

8.2 Testing and Observation Services

The recommendations provided in this report are based on the assumption that we will continue as Geotechnical Engineer-of-Record throughout each construction phase. It is important to maintain continuity of geotechnical interpretation and confirm that field conditions encountered are similar to those anticipated during design. In accordance with 2012 IBC, testing and observation services by the Geotechnical Engineer-of-Record are required to verify that construction has been performed in accordance with this report, approved plans and specifications. If we are not retained for these services, we cannot assume any responsibility for other's interpretation of our recommendations or the future performance of the project.

9.0 LIMITATIONS AND UNIFORMITY OF CONDITIONS

The recommendations of this report pertain only to the site investigated and are based upon the assumption that the soil conditions do not deviate from those disclosed in the investigation. If any variations or undesirable conditions are encountered during construction, or if the proposed construction will differ from that anticipated herein, we should be notified so that supplemental

recommendations can be given. The evaluation or identification of the potential presence of hazardous materials or environmental contamination was not part of our scope of services.

This report is issued with the understanding that it is the responsibility of the owner or their representative to ensure that the information and recommendations contained herein are brought to the attention of the design team for the project and incorporated into the plans and specifications, and the necessary steps are taken to see that the contractor and subcontractors carry out such recommendations in the field.

The recommendations contained in this report are preliminary until verified during construction by representatives of RCI. Changes in the conditions of a property can occur with the passage of time, whether they are due to natural processes or the works of man on this or adjacent properties. Additionally, changes in applicable or appropriate standards may occur, whether they result from legislation or the broadening of knowledge. Accordingly, the findings of this report may be invalidated partially or wholly by changes outside our control. Therefore, this report is subject to review and should not be relied upon after a period of three years.

Our professional services were performed, our findings obtained, and our recommendations prepared in accordance with generally accepted geotechnical engineering principles and practices used in the City of Fernley at this time. No warranty is expressed or implied.

10.0 REFERENCES

ASCE/SEI 7-10 Standard with March 2013 errata, Minimum Design Loads for Buildings and Other Structures American Society of Civil Engineers.

Geologic Map of Lyon, Douglas, and Ormsby Counties, Nevada, Nevada Bureau of Mines and Geology, 1969, U.S. Geological Survey from USGS map database: https://ngmdb.usgs.gov/mapview/.

Quaternary fault and fold database for the United States, U.S. Geological Survey and Nevada Bureau of Mines and Mineral Resources, accessed February, 2018, from USGS web site: http://earthquake.usgs.gov/hazards/qfaults/map/#qfaults/.

Soil Survey of City of Fernley Area, Nevada, Natural Resources Conservation Service Website: (http://websoilsurvey.sc.egov.usda.gov/App/HomePage.htm).

FEMA National Flood hazards map for City of Fernley, dated October 2017 from FEMA flood hazards map database: https://msc.fema.gov/portal/search.



Map Reference: *Google Earth, accessed on June 2017*

RCI Resource Concepts Inc

340 N. Minnesota St.
Carson City, NV 89703
775 883-1600

RB

FIGURE 1 VICINITY MAP

CITY OF FERNLEY PUBLIC WORKS
FERNLEY DEPOT
RESTROOM FACILITIES
FERNLEY, NV

PROJECT NO. 17-150 6B



FERNLEY DEPOT
675 E. MAIN STREET

E. MAIN STREET

SOIL TEST PIT LOCATIONS OBSERVED BY RESOURCE CONCEPTS, INC. IN DECEMBER 2018

RCI Resource Concepts Inc

340 N. Minnesota St.
Carson City, NV 89703
775 883-1600

RB

FIGURE 2 SITE PLAN

CITY OF FERNLEY PUBLIC WORKS
FERNLEY DEPOT
RESTROOM FACILITIES
FERNLEY, NV

PROJECT NO. 17-150.6B

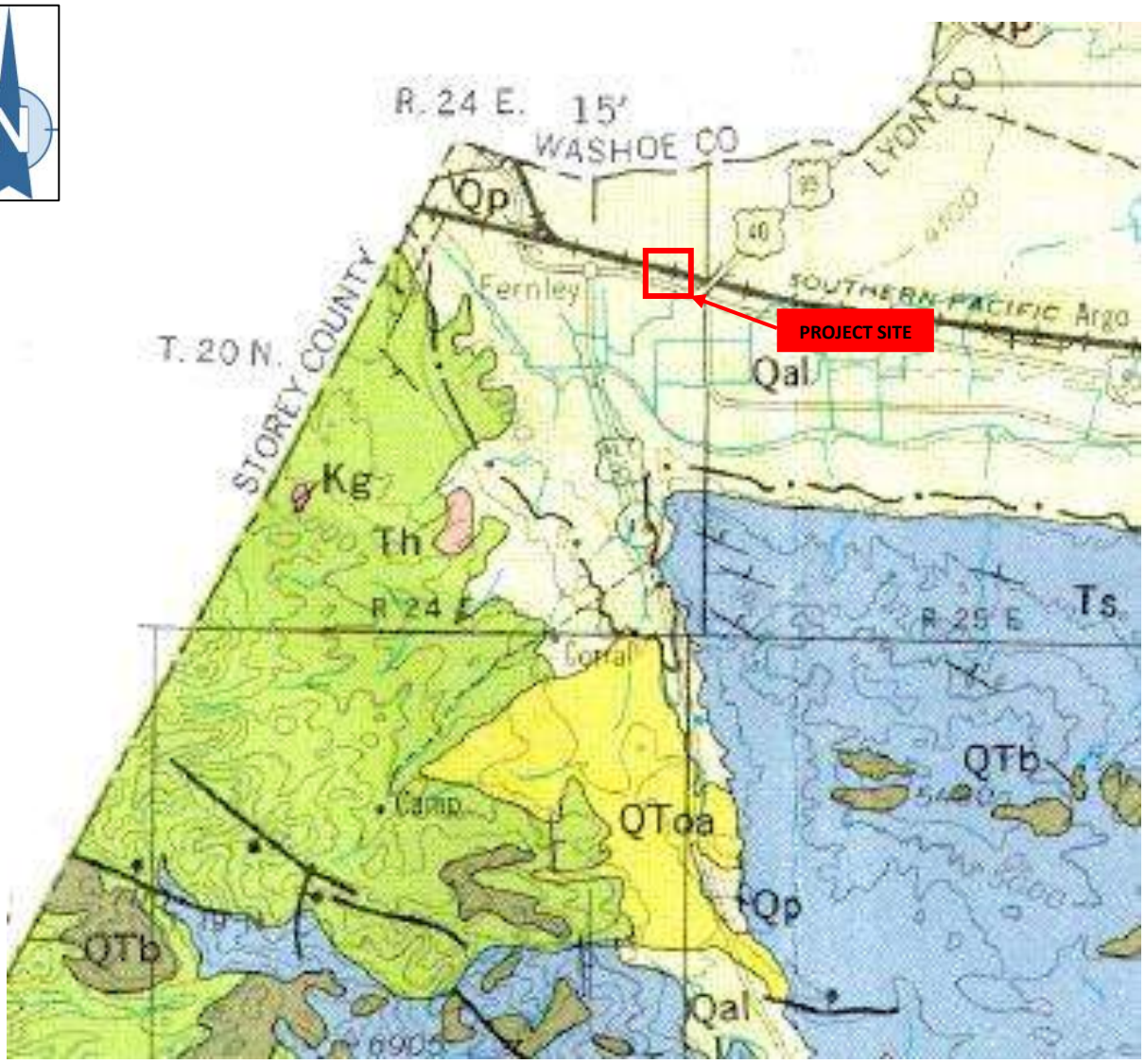

Moore James G., 1969

Qal-	Alluvial Fan Deposit	———	FAULT
QToa-	Older Alluvium	--------	INFERRED FAULT LOCATION
QTb-	Basalt		
Th-	Hartford Hill Rhyolite Tuff		
Ts-	Andesite Rocks		
Kg-	Undivided Nonporphyritic Quartz Monzonite		

Map Reference: *Nevada Bureau of Mines and Geology, 1969*
U.S. Geological Survey, Geologic Map of Lyon, Douglas, and Ormsby Counties, Nevada

Resource Concepts Inc
340 N. Minnesota St.
Carson City, NV 89703
775 883-1600

RB

FIGURE 3 GEOLOGIC MAP

CITY OF FERNLEY PUBLIC WORKS
FERNLEY DEPOT
RESTROOM FACILITIES
FERNLEY, NV

PROJECT NO. 17-150. 6B

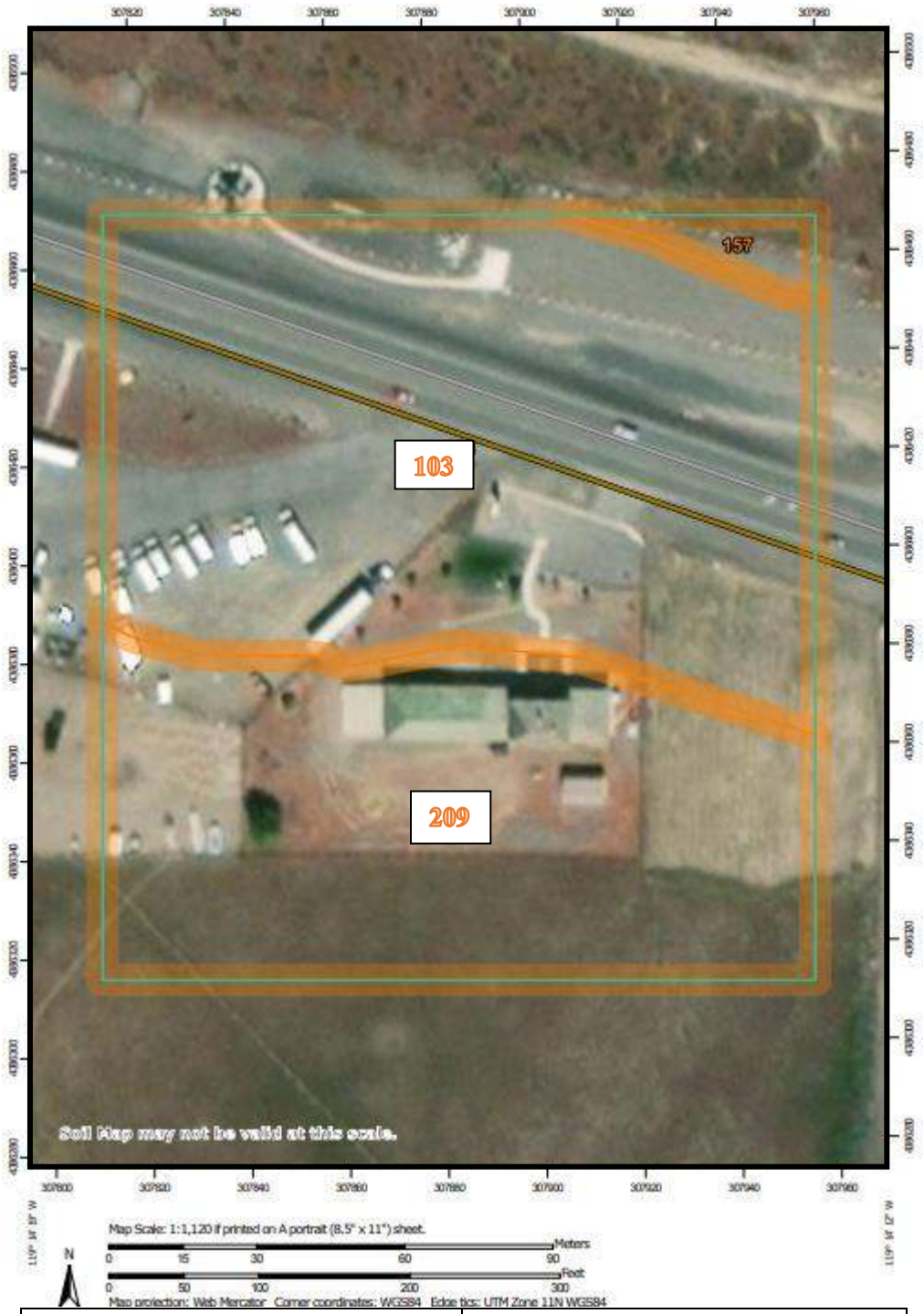

Map Unit Symbol	Map Unit Name (USCS)
103	Lahontan silty clay loam, strongly saline-alkali
209	Saralegui loamy sand, 0 to 4 percent slopes

Resource Concepts Inc

340 N. Minnesota St.
Carson City, NV 89703
775 883-1600

RB

FIGURE 4 SOILS MAP

CITY OF FERNLEY PUBLIC WORKS
FERNLEY DEPOT
RESTROOM FACILITIES
FERNLEY, NV

PROJECT NO. 17-150. 6B

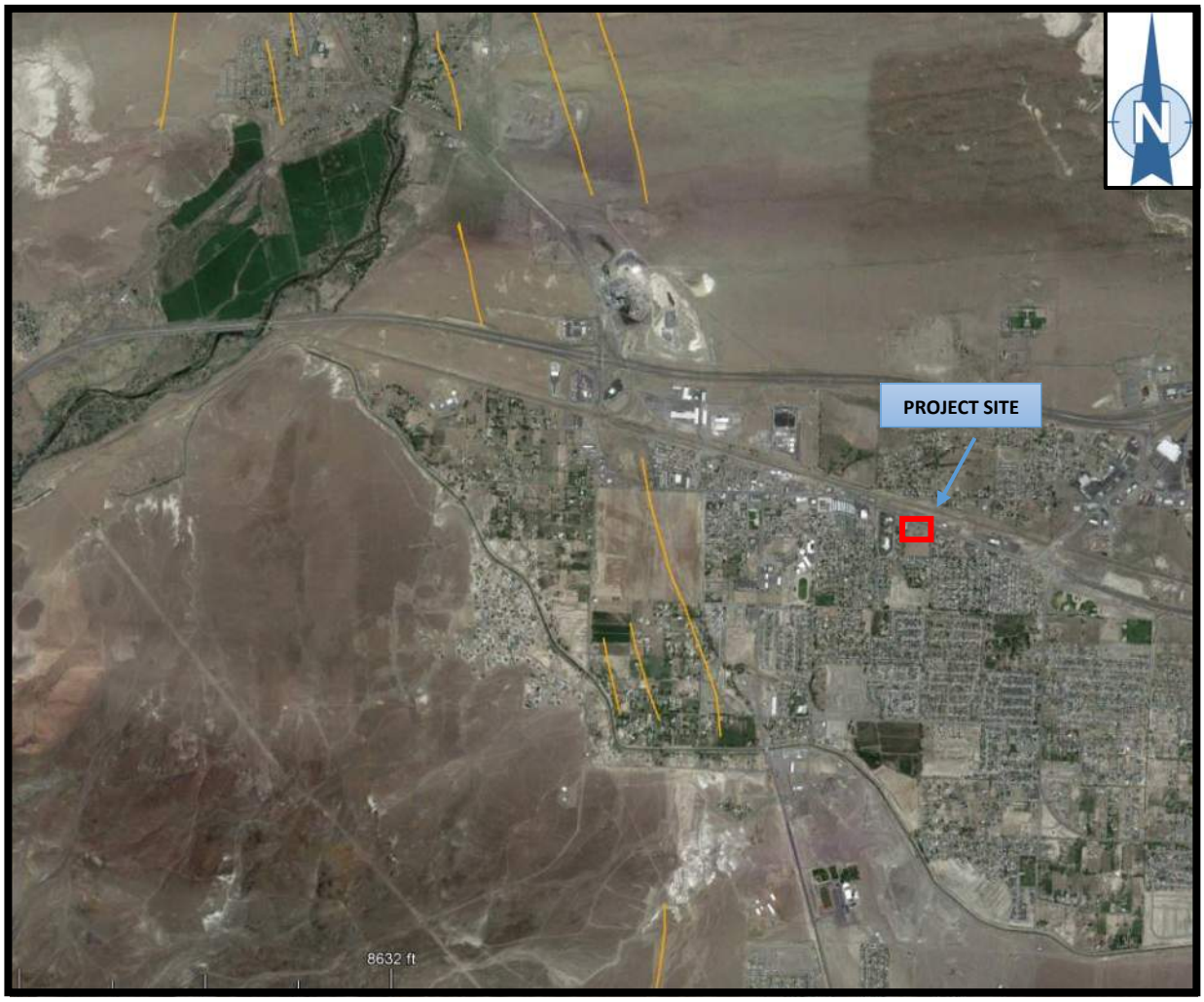

Map Reference: *Google Earth*, accessed on December 17, 2018

Quaternary Fault (Inactive)

Active Holocene Fault

RCI Resource Concepts Inc

340 N. Minnesota St.
Carson City, NV 89703
775 883-1600

RB

FIGURE 5 FAULT MAP

CITY OF FERNLEY PUBLIC WORKS
FERNLEY DEPOT
RESTROOM FACILITIES
FERNLEY, NV

PROJECT NO. 17-150. 6B

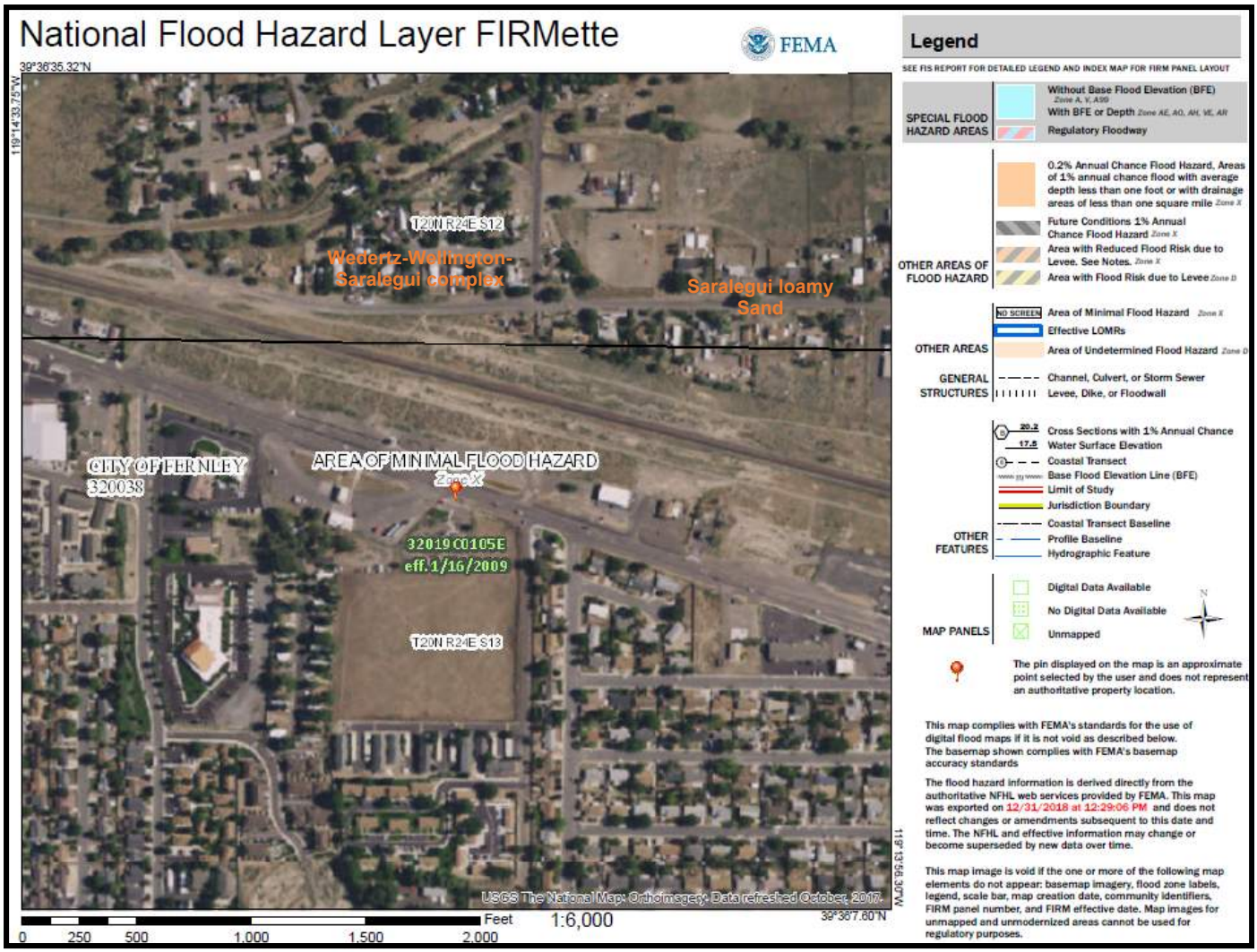

Resource Concepts Inc

340 N. Minnesota St.
Carson City, NV 89703
775 883-1600

DE

FIGURE 6 Flood Hazards MAP

CITY OF FERNLEY PUBLIC WORKS
FERNLEY DEPOT
RESTROOM FACILITIES
FERNLEY, NV

PROJECT NO. 17-150 B

APPENDIX A

FIELD INVESTIGATION

Resource Concepts, Inc.
4010 Technology Way
Carson City, Nevada 89703
775-883-1600

TEST PIT NUMBER TP-1

CLIENT City of Fernley
PROJECT NAME Restroom Facilities Geotech
PROJECT NUMBER 17-150 B
PROJECT LOCATION Fernley Depot, Fernley Nevada
DATE STARTED 12/21/18 **COMPLETED** 12/21/18
GROUND ELEVATION 4160 ft 4160 **TEST PIT SIZE**
EXCAVATION CONTRACTOR King Construction
GROUND WATER LEVELS:
EXCAVATION METHOD Excavator
AT TIME OF EXCAVATION ---
LOGGED BY RB **CHECKED BY** GL
AT END OF EXCAVATION ---
NOTES
AFTER EXCAVATION ---

DEPTH (ft)	SAMPLE TYPE NUMBER	TESTS	U.S.C.S.	GRAPHIC LOG	MATERIAL DESCRIPTION	
0.0			SM		(SM) TOPSOIL, medium dense, slightly moist, brown	
					0.6	4159.4
			SM		(SM) SILTY SAND, medium dense, slightly moist, brown (5 YR 4/3)	
					1.2	4158.8
		MC = 7% Fines = 21%	SM		(SM) SILTY SAND, medium dense, slightly moist, brown (5 YR 3/2)	
					2.1	4157.9
2.5			SM		(SM) VERY FINE GRAINED SILTY SAND, medium dense, slightly moist, brown (5 YR 4/3)	
					2.7	4157.3
		MC = 13% Fines = 13%	SM		3.1 (SM) SILTY SAND WITH GRAVEL, medium dense, slightly moist, brown (5 YR 4/3)	4156.9
			SM		(SM) SILTY SAND WITH FINE GRAIN SAND, medium dense, slightly moist, brown (7.5 YR 4/3)	
5.0						
7.5					7.6	4152.4
			SM		(SM) SILTY SAND, medium dense, slightly moist, brown (7.5 YR 3/4)	
					9.1	4150.9

Bottom of test pit at 9.1 feet.

GENERAL BH / TP / WELL - GINT STD US LAB.GDT - 1/7/19 12:22 - C:\USERS\RYAN\DESKTOP\GINT DESKTOP WORKING FOLDER\FERNLEY DEPOT.GPJ

Resource Concepts, Inc.
4010 Technology Way
Carson City, Nevada 89703
775-883-1600

TEST PIT NUMBER TP-2

CLIENT City of Fernley
PROJECT NAME Restroom Facilities Geotech
PROJECT NUMBER 17-150 B
PROJECT LOCATION Fernley Depot, Fernley Nevada
DATE STARTED 12/21/18 **COMPLETED** 12/21/18
GROUND ELEVATION 4161 ft 4160 **TEST PIT SIZE**
EXCAVATION CONTRACTOR King Construction
GROUND WATER LEVELS:
EXCAVATION METHOD Excavator
AT TIME OF EXCAVATION ---
LOGGED BY RB **CHECKED BY** GL
AT END OF EXCAVATION ---
NOTES First few inches of rocky fill look to be laid out as possible train track pad in the pit. **AFTER EXCAVATION** ---

DEPTH (ft)	SAMPLE TYPE NUMBER	TESTS	U.S.C.S.	GRAPHIC LOG	MATERIAL DESCRIPTION	
0.0			GP		(GP) 1"-2" DIAMETER COBBLE FILL, medium dense, dry, dark grey	
					0.6	4160.4
			SM		(SM) SILTY SAND WITH ROOTLETS, medium dense, slightly moist, brown (7.5 YR 3/3)	
					1.8	4159.2
			SM		2.2 (SM) SILTY SAND WITH GRAVEL, medium dense, slightly moist, brown (5 YR 4/3)	4158.8
2.5		MC = 10% Fines = 47%	SM		2.7 (SM) SILTY SAND-SANDY SILT, firm, dry, brown (7.5 YR 4/4)	4158.3
			SM		(SM) SILTY SAND-VERY FINE GRAINED SANDY SILT, firm, dry, brown (7.5 YR 4/3)	
5.0					5.1	4155.9
			SM		(SM) SILTY SAND-SANDY SILT, firm, slightly moist, brown (7.5 YR 3/4)	
					6.3	4154.7
7.5			SM		(SM) SILTY SAND, medium dense, dry, brown (7.5 YR 3/3)	
					9.2	4151.8

Bottom of test pit at 9.2 feet.

GENERAL BH / TP / WELL - GINT STD US LAB.GDT - 1/7/19 12:22 - C:\USERS\RYAN\DESKTOP\GINT DESKTOP WORKING FOLDER\FERNLEY DEPOT.GPJ

Resource Concepts, Inc.
4010 Technology Way
Carson City, Nevada 89703
775-883-1600

TEST PIT NUMBER TP-3

CLIENT City of Fernley
PROJECT NAME Restroom Facilities Geotech
PROJECT NUMBER 17-150 B
PROJECT LOCATION Fernley Depot, Fernley Nevada
DATE STARTED 12/21/18 **COMPLETED** 12/21/18
GROUND ELEVATION 4162 ft 4160 **TEST PIT SIZE**
EXCAVATION CONTRACTOR King Construction
GROUND WATER LEVELS:
EXCAVATION METHOD Excavator
AT TIME OF EXCAVATION ---
LOGGED BY RB **CHECKED BY** GL
AT END OF EXCAVATION ---
NOTES First few inches of rocky fill look to be laid out as possible train track pad in the pit. **AFTER EXCAVATION** ---

DEPTH (ft)	SAMPLE TYPE NUMBER	TESTS	U.S.C.S.	GRAPHIC LOG	MATERIAL DESCRIPTION	
0.0			GP		(GP) 1"-2" DIAMETER COBBLE FILL, medium dense, dry, dark grey	4161.7
		MC = 6% Fines = 20%	SM		(SM) SILTY SAND, medium dense, slightly moist, brown (7.5 YR 3/3)	
					1.2	4160.8
2.5			SM		(SM) SILTY SAND WITH GRAVEL, medium dense, dry, brown (5 YR 4/3)	
					3.2	4158.8
		MC = 8% Fines = 49%	SM		(SM) SILTY SAND-FINE GRAINED SANDY SILT, firm, dry, brown (7.5 YR 4/4)	
					3.8	4158.2
			SM		(SM) SILTY SAND-VERY FINE GRAINED SANDY SILT, firm, dry, brown (7.5 YR 4/3)	
					4.3	4157.7
5.0			SM		(SM) SILTY SAND-SANDY SILT, firm, dry, brown (7.5 YR 4/4)	
					5.2	4156.8
			SM		(SM) FINE GRAINED SILTY SAND, dense, dry, brown (7.5 YR 3/3)	
					7.2	4154.8
7.5			SM		(SM) SILTY SAND, medium dense, slightly moist, brown (7.5 YR 3/1)	
10.0					10.2	4151.8

Bottom of test pit at 10.2 feet.

GENERAL BH / TP / WELL - GINT STD US LAB.GDT - 1/7/19 12:22 - C:\USERS\RYAN\DESKTOP\GINT DESKTOP WORKING FOLDER\FERNLEY DEPOT.GPJ

APPENDIX B

LABORATORY TESTING

GRAIN SIZE DISTRIBUTION

Resource Concepts, Inc.
4010 Technology Way
Carson City, Nevada 89703
775-883-1600

CLIENT City of Fernley **PROJECT NAME** Restroom Facilities Geotech

PROJECT NUMBER 17-150 B **PROJECT LOCATION** Fernley Depot, Fernley Nevada

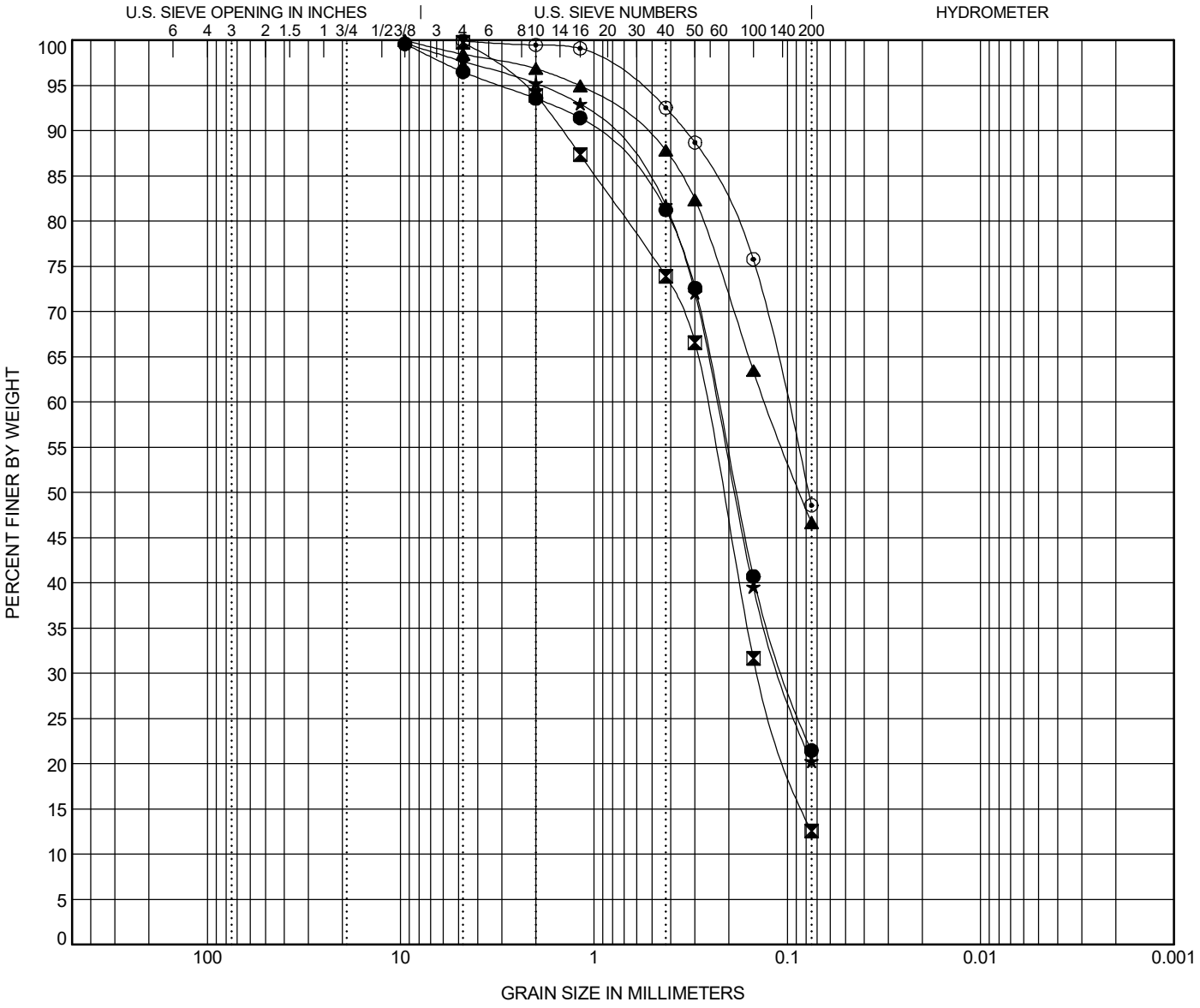

COBBLES	GRAVEL		SAND			SILT OR CLAY
	coarse	fine	coarse	medium	fine	

	BOREHOLE	DEPTH	Classification	LL	PL	PI	Cc	Cu
●	TP-1	1.5	SM					
⊠	TP-1	3.0	SM					
▲	TP-2	2.5						
★	TP-3	1.0						
⊙	TP-3	3.5						

	BOREHOLE	DEPTH	D100	D60	D30	D10	%Gravel	%Sand	%Silt	%Clay
●	TP-1	1.5	9.5	0.228	0.102		3.1	75.0	21.5	
⊠	TP-1	3.0	4.75	0.263	0.141			87.2	12.6	
▲	TP-2	2.5	9.5	0.13			1.5	51.8	46.7	
★	TP-3	1.0	9.5	0.232	0.106		2.0	77.4	20.3	
⊙	TP-3	3.5	4.75	0.1				51.3	48.6	

GRAIN SIZE - GINT STD US LAB.GDT - 12/28/18 11:05 - C:\USERS\RYAN\DESKTOP\GINT DESKTOP WORKING FOLDER\FERNLEY DEPOT.GPJ

CITY OF FERNLEY CRRC

50 % CONSTRUCTION DOCUMENTS

MARCH 21, 2023

PROJECT ADDRESS:



CLIENT:

CITY OF FERNLEY

595 SILVER LACE BLVD.
FERNLEY, NEVADA 89408

tsk

225 South Arlington Avenue
Reno NV, 89501
phone: 775.857.2949
fax: 775.857.2403
www.tska.com

THESE DRAWINGS AND SPECIFICATIONS ARE THE PROPERTY OF TATE SNYDER KIMSEY ARCHITECTS AND MAY NOT BE REPRODUCED OR USED FOR ANY PURPOSE WITHOUT THE ARCHITECTS WRITTEN CONSENT. AS INSTRUMENTS OF SERVICE, THESE DOCUMENTS ARE NOT FINAL AND READY FOR USE, AND THEREFORE NOT VALID, UNLESS THEY ARE SEALED, SIGNED AND DATED.

Copyright, Ltd 2023

Consultant

DESIGN TEAM

PROJECT ARCHITECTS

TSK ARCHITECTS
225 S. ARLINGTON AVE. SUITE A
RENO, NV 89501
P.775.857.2949

CIVIL ENGINEERING

LUMOS & ASSOCIATES
LARRY BIBEE, PE
LUMOS & ASSOCIATES
9222 PROTOTYPE DRIVE
RENO, NEVADA
P.775.827.6111

STRUCTURAL ENGINEERING

NELSON WILCOX STRUCTURAL ENGINEERS
225 S. ARLINGTON AVE. SUITE B
RENO, NV 89501
P.775.848.3166
BOISE WILCOX, SE PRINCIPAL
E.boise@nelson-wilcox.com

MECHANICAL/PLUMBING

AINSWORTH ASSOCIATES MECHANICAL ENGINEERS
1420 HOLCOMB AVENUE, SUITE 201
RENO, NEVADA 89502
775-329-9100
AHall@aa-me.com

ELECTRICAL ENGINEERING

PK ELECTRICAL
681 SIERRA ROSE DRIVE
RENO, NV 89511
P.775.826.9010
F.775.826.9030

FOOD SERVICE DESIGN

DIELI MURAWKA HOWE Inc.
RICHARD V. DIELI, FCSI
DIELI MURAWKA HOWE, INC.
3020 SUNGOLD DRIVE
LAS VEGAS, NEVADA 89134
P.619-285-1189
rdieli@dmhfoodservicedesign.com

PLEASE RECYCLE

Project

CITY OF FERNLEY CRRC

Job No: 21-058.00

Owner

CITY OF FERNLEY

50 % CONSTRUCTION DOCUMENTS
MARCH 21, 2023

ABBREVIATIONS

A		D		G		O	
A.D.	Area Drain	D.F.	Drinking Fountain	G.B.	Grab Bar	O.A.	Overall
A.V.	Audio/Visual	D.O.	Door Opening	G.F.R.C.	Glass Fiber Reinforced Concrete	O.C.	On Center
ACC.	Accessible	D.S.	Dry Standpipe	GA.	Guage	O.D.	Outside Diameter (Dim.)
ACOUS.	Acoustical	D.S.P.	Dry Standpipe	GALV.	Galvanized	O.F.C.I.	Owner Furnished Contractor Installed
ADJ.	Adjustible	DBL.	Double	GL.	Glass	O.F.O.I.	Owner Furnished Owner Installed
AGGR.	Aggregate	DEPT.	Department	GND.	Ground	O.H.	Opposite Hand
AL.	Aluminum	DET.	Detail	GR.	Grade	O.R.D.	Overflow Roof Drain
APPROX.	Approximate	DIA.	Diameter	GYP.	Gypsum	OBS.	Obscure
ARCH	Architectural	DIM.	Dimension			OFF.	Office
ASPH.	Asphalt	DISP.	Dispenser	H		OPNG.	Opening
		DN.	Down	H.B.	Hose Bibb	OPP.	Opposite
B		DR.	Door	H.M.	Hollow Metal		
B.O.F.	Bottom of Fixture	DS.	Downspout	HDWD.	Hardwood	P	
BD.	Board	DWG.	Drawing	HDWE.	Hardware	P.LAM.	Plastic Laminate
BITUM.	Bituminous	DWR.	Drawer	HGT.	Height	P.T.D.	Paper Towel Dispenser
BLDG.	Building			HORIZ.	Horizontal	P.T.D./R.	Combination Paper Towel Dispencer and Receptacle
BLK.	Block	E		HR.	Hour	P.T.R.	Paper Towel Receptacle
BLKG.	Blocking	(E)	Existing			PL.	Plate
BM.	Beam	E.	East	I		PLAS.	Plaster
BOT.	Bottom	E.I.F.S.	Exterior Insulation Finish System	I.D.	Inside Diameter (Dim.)	PLYWD	Plywood
		E.J.	Expansion Joint	INSUL.	Insulation	PR.	Pair
C		E.P.	Electrical Panelboard	INT.	Interior	PRCST.	Pre-cast
C.B.	Catch Basin	E.P.D.M.	Single Ply Roof Membrane			PT.	Point
C.F.C.I.	Contractor Furnished Contractor Installed	E.W.C.	Electric Water Cooler	J		PTN.	Partition
C.F.O.I.	Contractor Furnished Owner Installed	EA.	Each	JAN.	Janitor		
C.G.	Corner Guard	ELEC.	Electrical	JT.	Joint	Q	
C.I.	Cast Iron	ELEV.	Elevation			Q.T.	Quarry Tile
C.J.	Control Joint	EMER.	Emergency	K			
C.M.U.	Concrete Masonry Unit	ENCL.	Enclosure	KIT.	Kitchen	R	
CAB.	Cabinet	EQ.	Equal			R.	Riser
CEM.	Cement	EQUIP.	Equipment	L		R.D.	Roof Drain
CER.	Ceramic	EXIST.	Existing Exposed	LAB.	Laboratory	R.O.	Rough Opening
CLG.	Ceiling	EXP.	Expansion	LAM.	Laminate	R.W.L.	Rain Water Leader
CLKG.	Caulking	EXT.	Exterior	LAV.	Lavatory	RAD.	Radius
CLO.	Closet			LKR.	Locker	REF.	Reference
CLR.	Clear	F		LT.	Light	REFR.	Refrigerator
CNTR.	Counter	F.A.	Fire Alarm			REINF.	Reinforce
COL.	Column	F.B.	Flat Bar	M		REQD	Required
CONC.	Concrete	F.D.	Floor Drain	M.C.	Medicine Cabinet	RESIL.	Resilient
CONN.	Connection	F.E.	Fire Extinguisher	M.O.	Masonry Opening	RGTR.	Register
CONST.	Construction	F.E.C.	Fire Extinguisher Cabinet	MAX.	Maximum	RM.	Room
CONT.	Continuous	F.H.C.	Fire Hose Cabinet	MECH.	Mechanical	RRM	Restroom
CORR.	Corridor	F.O.C.	Face of Concrete	MEMB.	Membrane	RWD	Redwood
CPT.	Carpet	F.O.F.	Face of Finish	MFGR.	Manufacturer		
CT.	Ceramic Tile	F.O.S.	Face of Stud	MH.	Manhole	S	
CTR.	Center	F.S.	Full Size	MIN.	Minimum	S.	South
CTSK.	Countersunk	FDN.	Fountain	MIR.	Mirror	S.C.	Solid Core
		FIN.	Finish	MISC.	Miscellaneous	S.C.D.	Seat Cover Dispenser
		FLASH.	Flashing	MTD.	Mounted	S.D.	Soap Dispenser
		FLOUR.	Flourescent	MTL.	Metal	S.N.D.	Sanitary Napkin Dispensr
		FLR.	Floor	MUL.	Mullion	S.SK.	Service Sink
		FPRF.	Fireproof			SCHED.	Schedule
		FT.	Foot or Feet	N		SECT.	Section
		FTG.	Footing	N.	North	SH.	Shelf
		FURR.	Furring	N.I.C.	Not in Contract	SHR.	Shower
		FUT.	Future	N.T.S.	Not to Scale	SHT.	Sheet
				NO. OR #	Number	SIM.	Similar
				NOM.	Nominal	SPEC.	Specification
						SQ.	Square
						SST.	Stainless Steel

STA.	Station	V	
STD.	Standard	V.B.	Vapor Barriers
STL.	Steel	V.C.G.	Vinyl Corner Guard
STO.	Storage	V.T.	Vinyl Tile
STRL.	Structural	VAR.	Varies
SUSP.	Suspended	VERT.	Vertical
SYM.	Symmetrical	VEST.	Vestibule
T		W	
T.&G.	Tongue and Groove	W.	West
T.B.	Towel Bar	W.C.	Water Closet
T.C.	Top of Curb	W/	With
T.O.W.	Top of Wall	W/O	Without
T.P.	Top of Pavement	WD.	Wood
T.P.D.	Toilet Paper Dispenser	WK.P.	Working Point
T.V.	Television	WP.	Waterproof
TEL.	Telephone	WSCT.	Wainscot
TER.	Terazzo	WT.	Weight
THK.	Thick		
TRD.	Tread		
TYP.	Typical		
U			
U.N.O.	Unless Noted Otherwise		
UNIF.	Unfinished		
UR.	Urinal		

SYMBOL LEGEND

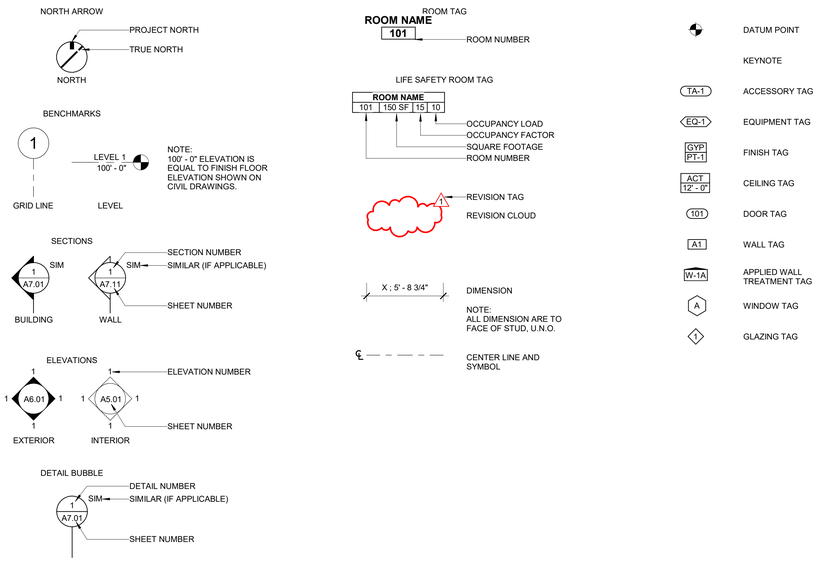

MATERIALS LEGEND

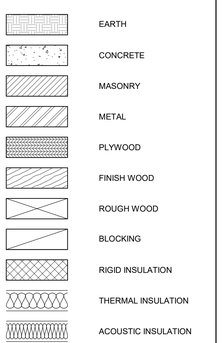

VICINITY MAP

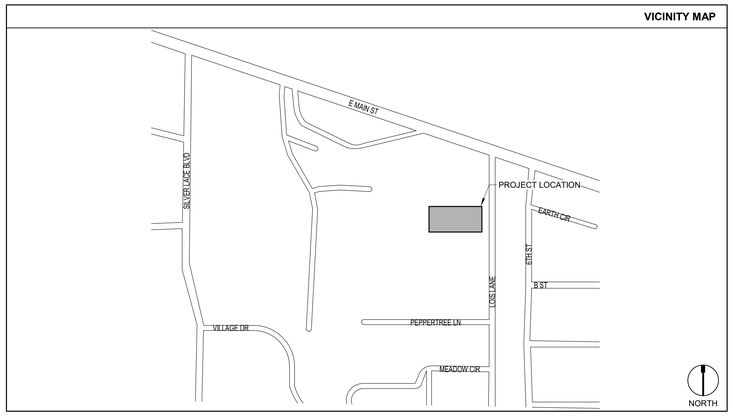

CODE ANALYSIS

RELATED CODE SECTION

OCCUPANCY CLASSIFICATION METHOD

NON-SEPARATED — 508.3

OCCUPANCY

A-3	303.4
A-2	303.3
B	304
E	305
S-2	311.3

ANALYSIS BASED ON MOST RESTRICTIVE A-3 OCCUPANCY

SPRINKLERED

FIRE SPRINKLER PROVIDED — YES

CONSTRUCTION TYPE

TYPE II B — TABLE 601 / 602

HEIGHT

ALLOWED = 75 FT — TABLE 504.3
ACTUAL = 40 FT

NUMBER OF STORIES

ALLOWED = 3 STORIES — TABLE 504.4
ACTUAL = 1 STORY

AREA

TYPE II B (A-3) — TABLE 506.2
ALLOWED - 38,000 SF
ACTUAL = 35,212 SF

FIRE-RESISTANCE RATINGS

TYPE II B	TABLE 601
PRIMARY STRUCTURAL FRAME	0
BEARING WALLS - EXTERIOR	0
BEARING WALLS - INTERIOR	0
NON BEARING WALLS - EXTERIOR	0
NON BEARING WALLS - INTERIOR	0
FLOOR CONSTRUCTION	0
ROOF CONSTRUCTION	0

ALLOWABLE AREA OF OPENINGS

30' OR GREATER - NO LIMIT TO OPENINGS — TABLE 705.8

OCCUPANCY CLASSIFICATION

MIXED USE - NON-SEPARATED OCCUPANCY — 508.3

ASSEMBLY GROUP A-2
- CAFETERIA
- COMMERCIAL KITCHEN

ASSEMBLY GROUP A-3
- GYMNASIUMS

BUSINESS GROUP B
- OFFICES

EDUCATION GROUP E
- CLASSROOMS
- DAY CARE FACILITY

STORAGE GROUP S-2
- MECHANICAL UTILITY SPACES
- ELECTRICAL ROOMS
- STORAGE AREAS THAT ARE ACCESSORY TO ANOTHER OCCUPANCY SHALL BE CLASSIFIED AS PART OF THAT OCCUPANCY 3.111.1

CODE ANALYSIS CALCULATIONS BASED ON NON-SEPARATED OCCUPANCY. THE MOST RESTRICTIVE OCCUPANCY IN TERMS OF ALLOWABLE BUILDING AREA AND HEIGHT IS A-2 / A-3 AND THEREFORE CALCULATIONS HAVE BEEN BASED ON A-2 / A-3 OCCUPANCY

MINIMUM NUMBER OF REQUIRED PLUMBING FIXTURES

BASE BID — TABLE 2902.1

	OCC. LOAD
EDUCATION	156
BUSINESS	13
STORAGE	9
ASSEMBLY	415

TOTAL OCC. LOAD	WC's	LAV's	BATHTUBS/ SHOWERS	DRINKING FOUNTAINS
593	22	17	1	3

EARLY LEARNING CENTER - ALT 1 — TABLE 2902.1

	OCC. LOAD
INSTITUTIONAL - CHILD DAY CARE	91
BUSINESS	5
STORAGE	1

TOTAL OCC. LOAD	WC's	LAV's	BATHTUBS/ SHOWERS	DRINKING FOUNTAINS
97	7	7	1	2

GYMNASIUM - ALT 2 — TABLE 2902.1

	OCC. LOAD
ASSEMBLY	501
STORAGE	5

TOTAL OCC. LOAD	WC's	LAV's	BATHTUBS/ SHOWERS	DRINKING FOUNTAINS
506	10	10		4

DRAWING INDEX

#	SHEET NAME	50% CD (2023-03-21)
0.0	COVER SHEET	■
G0.00	GENERAL SHEET	■
G0.01	GENERAL ACCESSIBILITY DETAILS	■
G1.01	LIFE SAFETY PLAN - OVERALL PLANS	■
G1.02	LIFE SAFETY PLAN - BASE BID	■
C1.00	CIVIL NOTES & LEGEND	■
C1.01	EXISTING CONDITIONS & DEMOLITION	■
C2.00	SITE BASE BID	■
C3.00	UTILITY	■
C4.00	GRADING	■
C5.00	DETAILS	■
C5.01	DETAILS	■
C5.02	DETAILS	■
L1.00	IRRIGATION LEGEND	■
L1.01	IRRIGATION PLAN BASE BID	■
L2.00	LANDSCAPE LEGEND, DETAILS AND NOTES	■
L2.01	LANDSCAPE PLAN BASE BID	■
L3.00	LANDSCAPE DETAILS	■
AS1.01	SITE PLAN - BASE BID	■
AS1.11	ENLARGED SITE PLANS AND DETAILS	■
AS1.12	ENLARGED SITE PLANS AND DETAILS	■
AS2.01	SITE DETAILS	■
A1.01	OVERALL FLOOR PLAN - BASE BID	■
A1.11	ENLARGED FLOOR PLAN - BASE BID	■
A1.21	DIMENSION & PARTITION PLAN - BASE BID	■
A1.22	DIMENSION HIGH WALL - BASE BID	■
A1.30	ENLARGED RESTROOM PLANS & INTERIOR ELEVATION - BASE BID	■
A1.31	ENLARGED RESTROOM PLANS & INTERIOR ELEVATIONS	■
A1.41	FINISH PLAN - BASE BID	■
A1.51	ENLARGED SLAB PLAN - BASE BID	■
A2.00	MATERIAL FINISH SCHEDULE	■
A2.10	DOOR SCHEDULE	■
A2.20	DOOR DETAILS	■
A2.21	DOOR DETAILS	■
A2.22	DOOR DETAILS	■
A2.30	PARTITION TYPES	■
A2.31	PARTITION TYPES	■
A2.40	WINDOW SCHEDULE - BASE BID, ALT A	■
A2.41	INTERIOR DETAILS	■
A2.42	INTERIOR DETAILS	■
A3.01	REFLECTED CEILING PLAN - BASE BID	■
A3.30	CEILING DETAILS	■
A4.01	ROOF PLAN - BASE BID	■
A4.20	ROOF TYPE DETAILS	■
A4.21	ROOF DETAILS	■
A5.00	INTERIOR ELEVATIONS	■
A5.01	INTERIOR ELEVATIONS	■
A5.02	INTERIOR ELEVATIONS	■
A5.03	INTERIOR ELEVATIONS - BASE BID	■
A6.00	EXTERIOR ELEVATIONS - BASE BID	■
A6.01	EXTERIOR ELEVATIONS - BASE BID	■
A7.00	BUILDING SECTIONS - BASE BID	■
A7.01	BUILDING SECTIONS - BASE BID	■
A7.10	WALL SECTION	■
A7.11	WALL SECTION	■
A7.12	WALL SECTION	■
A7.13	WALL SECTION	■
A7.14	WALL SECTION	■
A7.31	BUILDING DETAILS	■
A8.00	CASEWORK PLANS AND ELEVATIONS - BASE BID	■
A8.11	CASEWORK SECTIONS & DETAILS	■
S0	STRUCTURAL GENERAL NOTES	■
S0.1	SPECIAL INSPECTIONS & QUALITY ASSURANCE	■
S0.2	TYP. CONC. & FOUNDATION DETAILS	■
S0.3	TYP. CONC. & CMU DETAILS	■
S0.4	TYP. MASONRY DETAILS	■
S0.5	TYP. STEEL DETAILS	■
S0.6	TYP. ROOF FRAMING DETAILS	■
S0.7	TYP. ROOF FRAMING DETAILS	■
S0.8	TYP. ROOF FRAMING DETAILS	■
S0.9	TYP. INTERIOR COLD-FORMED STEEL DETAILS	■
S0.10	TYP. INTERIOR COLD-FORMED STEEL DETAILS	■
S0.11	TYP. SITE DETAILS	■
S1.01	OVERALL FOUNDATION PLAN - BASE BID	■
S1.11	ENLARGED FOUNDATION PLAN - BASE BID	■
S4.01	LOW ROOF FRAMING PLAN - BASE BID	■
S4.02	HIGH ROOF FRAMING PLAN - BASE BID	■
S4.03	LOW ROOF JOIST LOADING PLANS - BASE BID	■
S4.04	HIGH ROOF JOIST LOADING PLANS - BASE BID	■
S5.01	WALL ELEVATIONS - BASE BID	■
S5.02	WALL ELEVATIONS - BASE BID	■
S7.01	STRUCTURAL SECTIONS - BASE BID	■
S7.02	STRUCTURAL SECTIONS - BASE BID	■
FS0.0.0	FOODSERVICE EQUIPMENT GENERAL NOTES	■
FS0.1.0	FOODSERVICE EQUIPMENT FLOOR PLAN	■
FS0.2.0	FOODSERVICE EQUIPMENT SCHEDULE	■
FS0.3.0	FOODSERVICE EQUIPMENT PLUMBING PLAN	■
FS0.4.0	FOODSERVICE EQUIPMENT ELECTRICAL PLAN	■
FS0.5.0	FOODSERVICE EQUIPMENT BUILDING WORK PLAN	■
FS0.6.0	FOODSERVICE EQUIPMENT REFRIGERATION PLAN	■
FS0.6.1	FOODSERVICE EQUIPMENT REFRIGERATION RACK DETAILS	■
FS0.8.0	FOODSERVICE EQUIPMENT DETAILS	■
FS0.8.1	FOODSERVICE EQUIPMENT DETAILS	■
FS0.9.0	FOODSERVICE EQUIPMENT ATTACHMENT DETAILS	■
FS0.9.1	FOODSERVICE EQUIPMENT ATTACHMENT DETAILS	■
FS0.10.0	FOODSERVICE EQUIPMENT EXHAUST HOOD DETAILS	■
FP0.00	FIRE PROTECTION SCHEDULES, LEGEND, & NOTES	■
FP1.01	FIRE PROTECTION OVERALL FLOOR PLAN	■
M0.00	MECHANICAL LEGEND, NOTES, & AIR DISTRIBUTION	■
M0.01	MECHANICAL EQUIP SCHEDULES	■
M1.01	MECHANICAL OVERALL FLOOR PLAN	■
M1.11	MECHANICAL PARTIAL FLOOR PLAN - BASE BID	■
M2.1	MECHANICAL PARTIAL ZONING PLAN - BASE BID	■
M4.01	MECHANICAL PARTIAL ROOF PLAN - BASE BID	■
M5.01	CAPTIVEAIRE PLANS	■
M5.02	CAPTIVEAIRE PLANS	■
M5.03	CAPTIVEAIRE PLANS	■
M5.04	CAPTIVEAIRE PLANS	■
M6.01	MECHANICAL DETAILS	■
P0.00	PLUMBING SCHEDULES, LEGEND, NOTES, & SHEET INDEX	■
P1.01	PLUMBING OVERALL FLOOR PLAN	■
P1.11	PLUMBING PARTIAL FLOOR PLAN - BASE BID	■
P2.11	PLUMBING ENLARGED FLOOR PLANS - BASE BID	■
P2.12	PLUMBING ENLARGED FLOOR PLANS - BASE BID	■
P4.01	PLUMBING PARTIAL ROOF PLAN - BASE BID	■
P6.01	PLUMBING DETAILS	■
PS1.01	PLUMBING SITE PLAN	■
E0.01	LEGENDS, FA ONLINE DIAGRAM & DRAWING SCHEDULE	■
E0.02	FIXTURE SCHEDULE AND IECC CALCULATIONS	■
E0.03	ONLINE DIAGRAM AND LOAD CALCULATIONS	■
E0.04	PANEL SCHEDULES	■
E0.05	PANEL SCHEDULES	■
E0.06	DETAILS	■
E0.07	DETAILS	■
E1.01	DEMOLITION SITE PLAN	■
E1.02	NEW WORK SITE PLAN	■
E2.01	LIGHTING PLAN - BASE BID	■
E3.01	POWER PLAN - BASE BID	■
E4.01	MECHANICAL POWER PLAN - BASE BID	■
E4.02	ROOF MECHANICAL POWER PLAN - BASE BID	■
E5.01	FIRE ALARM PLAN - BASE BID	■
E6.01	KITCHEN POWER PLAN - BASE BID	■

#	SHEET NAME	50% CD (2023-03-21)
T0.01	TELECOM GENERAL NOTES, LEGEND, AND DRAWING SCHEDULE	■
T0.02	TELECOM DETAILS	■
T0.03	TELECOM ONELINE DIAGRAMS	■
T0.04	ENLARGED TELECOM ROOM PLANS	■
T0.05	SECURITY INTRUSION DETECTION SYSTEM DETAILS	■
T0.06	SECURITY VIDEO SURVEILANCE CAMERA DETAILS	■
T1.01	TELECOM SITE PLAN	■
T2.01	TELECOM PLAN - BASE BID	■

#	SHEET NAME	50% CD (2023-03-21)
G1.02A	LIFE SAFETY PLAN - ALT. A	■
C2.00A	SITE LAYOUT ALTERNATE A	■
L1.01A	IRRIGATION PLAN ALTERNATE A	■
L2.01A	LANDSCAPE PLAN ALTERNATE A	■
AS1.01A	SITE PLAN - ALT. A	■
AS1.11A	ENLARGED SITE PLAN - ALT. A	■
A1.01A	OVERALL FLOOR PLAN - ALT. A	■
A1.11A	ENLARGED FLOOR PLAN - ALT. A	■
A1.21A	DIMENSION & PARTITION PLAN - ALT. A	■
A1.30A	ENLARGED RESTROOM PLANS & INTERIOR ELEVATIONS - ALT. A	■
A1.41A	FINISH PLAN - ALT. A	■
A1.51A	ENLARGED SLAB PLAN - ALT. A	■
A2.00A	MATERIAL FINISH SCHEDULE	■
A2.10A	DOOR SCHEDULE - ALT. A	■
A2.40A	WINDOW SCHEDULE - ALT. A	■
A3.01A	REFLECTED CEILING PLAN - ALT. A	■
A4.01A	ROOF PLAN - ALT. A	■
A5.01A	INTERIOR ELEVATIONS - ALT. A	■
A5.02A	INTERIOR ELEVATIONS - ALT. A	■
A6.01A	EXTERIOR ELEVATION - ALT. A	■
A7.01A	BUILDING SECTIONS - ALT. A	■
A7.10A	WALL SECTION - ALT. A	■
A8.01A	CASEWORK PLANS AND ELEVATIONS - ALT. A	■
S1.01A	OVERALL FOUNDATION PLAN - ALT. A	■
S1.11A	ENLARGED FOUNDATION PLAN - ALT. A	■
S4.01A	ROOF FRAMING PLAN - ALT. A	■
S4.02A	JOIST LOADING PLANS - ALT. A	■
S4.05A	JOIST LOADING PLANS - ALT. A	■
S5.01A	WALL ELEVATIONS - ALT. A	■
S7.01A	STRUCTURAL SECTIONS - ALT. A	■
M1.11A	MECHANICAL PARTIAL FLOOR PLAN - ALT. A	■
M2.2	MECHANICAL PARTIAL ZONING PLAN - ALT. A	■
M4.01A	MECHANICAL PARTIAL ROOF PLAN - ALT. A	■
P1.11A	PLUMBING PARTIAL FLOOR PLAN - ALT. A	■
P2.11A	PLUMBING ENLARGED FLOOR PLANS - ALT. A	■
P4.01A	PLUMBING PARTIAL ROOF PLAN - ALT. A	■
E2.01A	LIGHTING PLAN - ALT. A	■
E3.01A	POWER PLAN - ALT. A	■
E4.01A	MECHANICAL POWER PLAN - ALT. A	■
E4.02A	ROOF MECHANICAL POWER PLAN - ALT. A	■
E5.01A	FIRE ALARM PLAN - ALT. A	■
E6.01A	KITCHEN POWER PLAN - ALT. A	■
T2.01A	TELECOM PLAN - ALT A	■

#	SHEET NAME	50% CD (2023-03-21)
G1.02B	LIFE SAFETY PLAN - ALT. B	■
C2.00B	SITE LAYOUT ALTERNATE B	■
L1.01B	IRRIGATION PLAN ALTERNATE B	■
L2.01B	LANDSCAPE PLAN ALTERNATE B	■
AS1.01B	SITE PLAN - ALT. B	■
AS1.11B	SITE PLAN - ALT. B	■
A1.01B	OVERALL FLOOR PLAN - ALT. B	■
A1.11B	ENLARGED FLOOR PLAN - ALT. B	■
A1.21B	DIMENSION & PARTITION PLAN - ALT. B	■
A1.22B	DIMENSION HIGH WALL - ALT. B	■
A1.30B	ENLARGED RESTROOM PLANS & INTERIOR ELEVATIONS - ALT. B	■
A1.41B	FINISH PLAN - ALT. B	■
A1.51B	ENLARGED SLAB PLAN - ALT. B	■
A2.00B	MATERIAL FINISH SCHEDULE	■
A2.10B	DOOR SCHEDULE - ALT. B	■
A2.40B	WINDOW SCHEDULE - ALT B	■
A3.01B	REFLECTED CEILING PLAN - ALT. B	■
A4.01B	ROOF PLAN - ALT. B	■
A5.01B	INTERIOR ELEVATIONS - ALT. B	■
A5.02B	INTERIOR ELEVATIONS - ALT. B	■
A6.01B	EXTERIOR ELEVATIONS - ALT. B	■
A6.02B	EXTERIOR ELEVATIONS - ALT. B	■
A7.01B	BUILDING SECTIONS - ALT. B	■
A7.02B	BUILDING SECTIONS - ALT. B	■
A7.10B	WALL SECTION - ALT. B	■
A7.11B	WALL SECTION - ALT. B	■
A7.12B	WALL SECTION - ALT. B	■
S1.01B	OVERALL FOUNDATION PLAN - ALT. B	■
S1.11B	ENLARGED FOUNDATION PLAN - ALT. B	■
S4.01B	ROOF FRAMING PLAN - ALT. B	■
S5.01B	WALL ELEVATIONS - ALT. B	■
S7.01B	STRUCTURAL SECTIONS - ALT. B	■
S8.01B	STRUCTURAL DETAILS - ALT. B	■
S4.02B	JOIST LOADING PLANS - ALT. B	■
M1.11B	MECHANICAL PARTIAL FLOOR PLAN - ALT. B	■
M2.3	MECHANICAL PARTIAL ZONING PLAN - ALT. B	■
M4.01B	MECHANICAL PARTIAL ROOF PLAN - ALT. B	■
P1.11B	PLUMBING PARTIAL FLOOR PLAN - ALT. B	■
P2.11B	PLUMBING ENLARGED FLOOR PLANS - ALT. B	■
P4.01B	PLUMBING PARTIAL ROOF PLAN - ALT. B	■
E2.01B	LIGHTING PLAN - ALT. B	■
E3.01B	POWER PLAN - ALT. B	■
E4.01B	MECHANICAL POWER PLAN - ALT. B	■
E5.01B	FIRE ALARM PLAN - ALT. B	■
E4.02B	ROOF MECHANICAL POWER PLAN - ALT B	■
T2.01B	TELECOM PLAN - ALT. B	■

tsk
225 South Arlington Avenue
Reno NV, 89501
phone: 775.857.2949
fax: 775.857.2403
www.tska.com

THESE DRAWINGS AND SPECIFICATIONS ARE THE PROPERTY OF TATE SNYDER KIMSEY ARCHITECTS AND MAY NOT BE REPRODUCED OR USED FOR ANY PURPOSE WITHOUT THE ARCHITECTS WRITTEN CONSENT. AS INSTRUMENTS OF SERVICE, THESE DOCUMENTS ARE NOT FINAL AND READY FOR USE, AND THEREFORE NOT VALID, UNLESS THEY ARE SEALED, SIGNED AND DATED.

Copyright, Ltd 2023

Consultant

PLEASE RECYCLE

Project
CITY OF FERNLEY CRRC

Job No: 21-058.00

Owner
CITY OF FERNLEY

50 % CONSTRUCTION DOCUMENTS

REVISIONS		
REV	DATE	DESCRIPTION

Sheet Title
GENERAL SHEET

Date: MARCH 21, 2023
Sheet No:
G0.00

DESIGN CRITERIA FOR ACCESSIBLE RESTROOMS

NOTE:
ALL HEIGHT DIMENSIONS ARE TO THE HIGHEST OPERATING CONTROL INCLUDING COIN SLOT. THIS INCLUDES ALL ACCESSORIES.

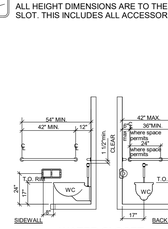

WATER CLOSET

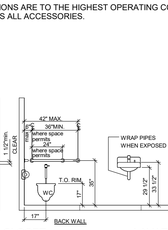

LAVATORY
(ALL ACCESSIBLE)

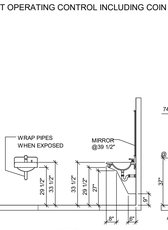

MIRROR

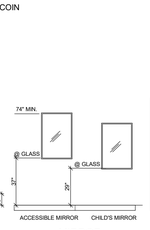

CHILD LAVATORY

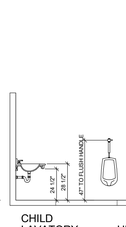

URINAL

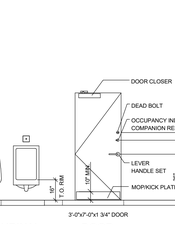

DOOR

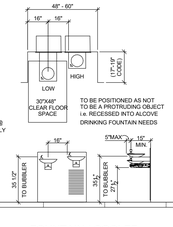

FOUNTAIN / COOLER

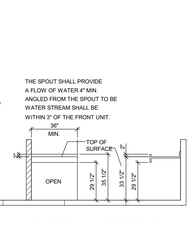

DIAPER CHANGE TABLE

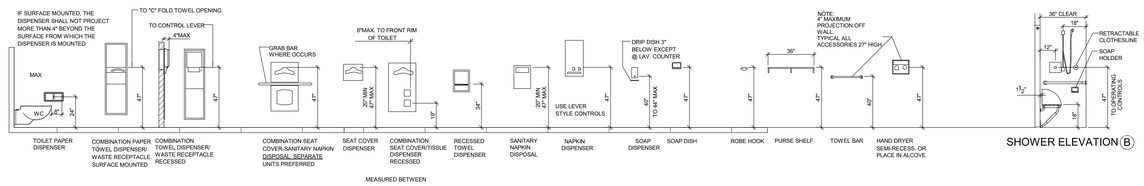

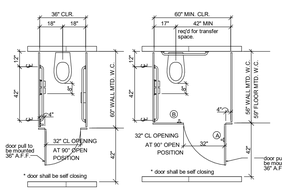

AMBULATORY STALL

ACCESSIBLE STALL

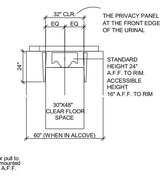

URINAL

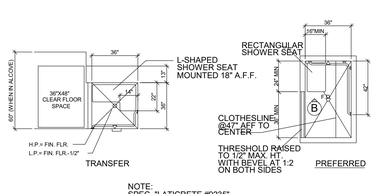

ACCESSIBLE SHOWERS

NOTE:
SPEC. "LATICRETE #9235" WATERPROOF MEMBRANE.

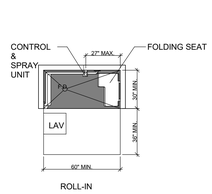

ROLL-IN

19 ADA_TYPICAL FIXTURE ELEVATIONS
SCALE: 1/4" = 1'-0"

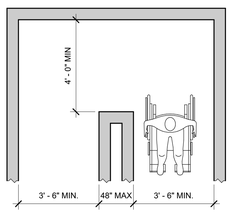

180 DEG TURN

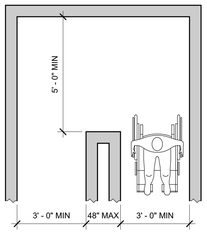

180 DEG TURN EXCEPTION

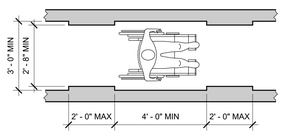

ACCESSIBLE ROUTE

18 ADA_CLEAR WIDTH
SCALE: 3/8" = 1'-0"

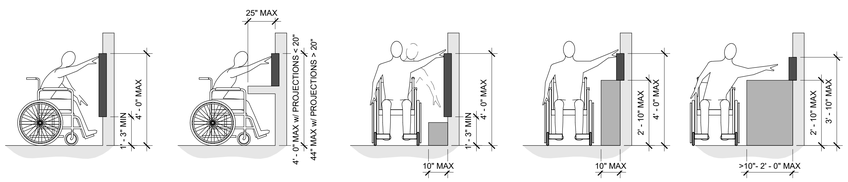

FRONT | **FRONT OBSTRUCTED** | **SIDE** | **SIDE HIGH SIDE OBSTRUCTED** | **SIDE HIGH SIDE OBSTRUCTED**

17 ADA_REACH RANGE
SCALE: 3/8" = 1'-0"

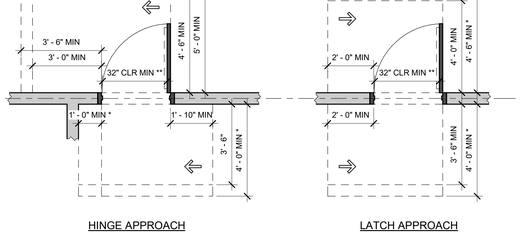

FRONT APPROACH | HINGE APPROACH | LATCH APPROACH

NOTES:
* IF BOTH LATCH AND CLOSER ARE PROVIDED
** CLEAR WIDTH SHALL COMPLY WITH LOCAL CODE AMENDMENT REQUIREMENTS

10 ADA_DOOR SWING CLEARANCES
SCALE: 3/8" = 1'-0"

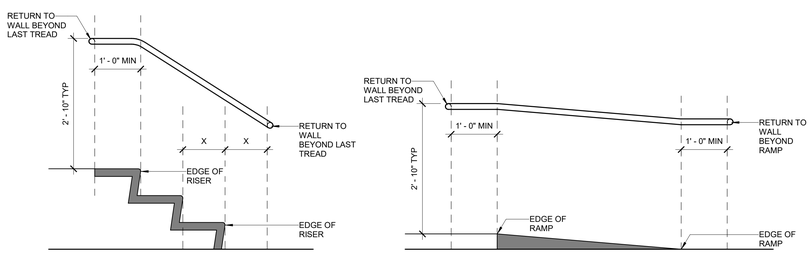

9 ADA_HANDRAIL EXTENSIONS AT STAIRS AND RAMPS
SCALE: 3/4" = 1'-0"

3 ADA_VERTICAL CHANGE IN LEVEL
SCALE: 1/2" = 1'-0"

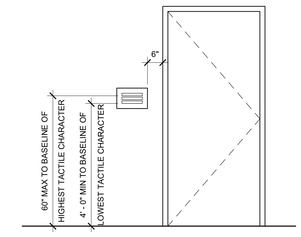

2 ADA_SIGNAGE PLACEMENT
SCALE: 1/2" = 1'-0"

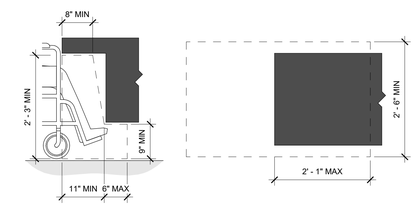

ELEVATION | **PLAN**

1 ADA_KNEE AND TOE CLEARANCE
SCALE: 3/4" = 1'-0"

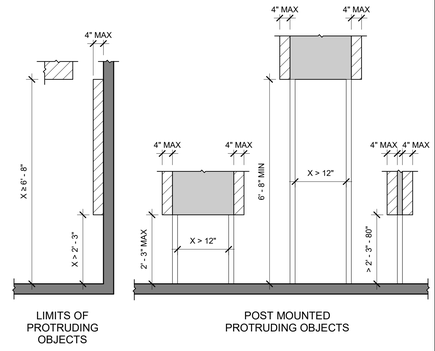

LIMITS OF PROTRUDING OBJECTS | POST MOUNTED PROTRUDING OBJECTS

4 ADA_PROTRUDING OBJECTS
SCALE: 1/2" = 1'-0"



PERMITTED VERTICAL CHANGE

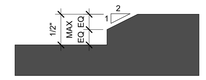

PERMITTED BEVELED CHANGE

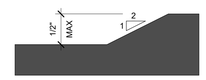

PERMITTED BEVELED CHANGE

tsk
225 South Arlington Avenue
Reno NV, 89501
phone: 775.857.2949
fax: 775.857.2403
www.tska.com

THESE DRAWINGS AND SPECIFICATIONS ARE THE PROPERTY OF TATE SNYDER KIMSEY ARCHITECTS AND MAY NOT BE REPRODUCED OR USED FOR ANY PURPOSE WITHOUT THE ARCHITECTS WRITTEN CONSENT. AS INSTRUMENTS OF SERVICE, THESE DOCUMENTS ARE NOT FINAL AND READY FOR USE, AND THEREFORE NOT VALID, UNLESS THEY ARE SEALED, SIGNED AND DATED.

Copyright, Ltd 2023

Consultant

PLEASE RECYCLE

Project
CITY OF FERNLEY CRRC

Job No: 21-058.00

Owner
CITY OF FERNLEY

50 % CONSTRUCTION DOCUMENTS

REVISIONS		
REV	DATE	DESCRIPTION

Sheet Title
GENERAL ACCESSIBILITY DETAILS

Date: MARCH 21, 2023
Sheet No:
G0.01

BOYS AND GIRLS CLUB

BOYS AND GIRLS CLUB	ADMIN OFFICE	471 SF
BOYS AND GIRLS CLUB	BUILDING SUPPORT	2227 SF
BOYS AND GIRLS CLUB	CAFETERIA	2068 SF
BOYS AND GIRLS CLUB	CLASSROOM	777 SF
BOYS AND GIRLS CLUB	CLASSROOM	779 SF
BOYS AND GIRLS CLUB	CLASSROOM	777 SF
BOYS AND GIRLS CLUB	CLASSROOM	802 SF
BOYS AND GIRLS CLUB	CORRIDOR	1835 SF
BOYS AND GIRLS CLUB	KITCHEN	2484 SF
BOYS AND GIRLS CLUB	LOBBY	1900 SF
BOYS AND GIRLS CLUB	OFFICE	180 SF
BOYS AND GIRLS CLUB	OFFICE	215 SF
BOYS AND GIRLS CLUB	RECEPTION	182 SF
BOYS AND GIRLS CLUB	RR	73 SF
BOYS AND GIRLS CLUB	RR	75 SF
BOYS AND GIRLS CLUB	RR	73 SF
BOYS AND GIRLS CLUB	RR	75 SF
BOYS AND GIRLS CLUB	RR	123 SF
BOYS AND GIRLS CLUB	RR	230 SF
BOYS AND GIRLS CLUB	SECURED ENTRY	286 SF
BOYS AND GIRLS CLUB	STORAGE	245 SF
BOYS AND GIRLS CLUB	STORAGE	152 SF
BOYS AND GIRLS CLUB	TEEN CENTER	1927 SF
BOYS AND GIRLS CLUB	YOUTH GAME ROOM	1401 SF
		19358 SF

EARLY LEARNING CENTER

EARLY LEARNING CENTER	(18) 2-YR-OLD'S	731 SF
EARLY LEARNING CENTER	(24) 3-YR-OLD'S	942 SF
EARLY LEARNING CENTER	CORRIDOR	1068 SF
EARLY LEARNING CENTER	INFANT	365 SF
EARLY LEARNING CENTER	OFFICE	253 SF
EARLY LEARNING CENTER	RR	121 SF
EARLY LEARNING CENTER	SECURED ENTRY	182 SF
EARLY LEARNING CENTER	STORAGE	221 SF
EARLY LEARNING CENTER	TODLER	519 SF
		4401 SF

GYMNASIUM

GYMNASIUM	GYMNASIUM	9685 SF
GYMNASIUM	RR	650 SF
GYMNASIUM	STORAGE	1044 SF
		11379 SF
		35139 SF



1 LIFE SAFETY PLAN - OVERALL PLANS
SCALE: 3/32" = 1'-0"

NORTH

GENERAL NOTES

1 PER 2019 CBC SECTION 703.7: FIRE WALLS, FIRE BARRIERS, AND SMOKE PARTITIONS OR ANY OTHER WAL REQUIRED TO HAVE PROTECTED OPENINGS OR PENETRATIONS SHALL BE EFFECTIVELY AND PERMANENTLY IDENTIFIED WITH SIGNS OR STENCILING. SUCH IDENTIFICATION SHALL: (1) BE LOCATED WITHIN 15' OF THE END OF EACH WALL AND AT INTERVALS NOT EXCEEDING 30' MEASURED HORIZONTALLY ALONG THE WALL OR PARTITION; AND (3) INCLUDE LETTERING NOT LESS THAN 3" IN HEIGHT WITH A MINIMUM 3/8" STROKE IN A CONTRASTING COLOR INCORPORATING THE SUGGESTED WORKING: "FIRE AND/OR SMOKE BARRIER - PROTECT ALL OPENINGS" OR OTHER WORDING.

KEYNOTES

1 FIRE EXTINGUISHER

LEGEND

ROOM NAME
ROOM 101 500 SF 100 5
OCCUPANT LOAD
OCCUPANT LOAD FACTOR
AREA
ROOM NUMBER
1 HR FIRE PARTITION
2 HR FIRE PARTITION
SMOKE RESISTIVE PARTITION
PATH OF EGRESS TO EXIT DISCHARGE
0 EXIT DIRECTION AND NUMBER OF OCCUPANTS
MOST REMOTE POINT FOR TRAVEL DISTANCE
F.E.C. FIRE EXTINGUISHER CABINET - FINAL LOCATION TO BE FINALIZED BY CONTRACTOR AND LOCAL FIRE DEPARTMENT
EXIT SIGN, SEE ELECTRICAL DRAWINGS

tsk
225 South Arlington Avenue
Reno NV, 89501
phone: 775.857.2949
fax: 775.857.2403
www.tska.com

THESE DRAWINGS AND SPECIFICATIONS ARE THE PROPERTY OF TATE SNYDER KIMSEY ARCHITECTS AND MAY NOT BE REPRODUCED OR USED FOR ANY PURPOSE WITHOUT THE ARCHITECTS WRITTEN CONSENT. AS INSTRUMENTS OF SERVICE, THESE DOCUMENTS ARE NOT FINAL AND READY FOR USE, AND THEREFORE NOT VALID, UNLESS THEY ARE SEALED, SIGNED AND DATED.

Copyright, Ltd 2023

Consultant

PLEASE RECYCLE

Project
CITY OF FERNLEY CRRC

Job No: 21-058.00

Owner
CITY OF FERNLEY

50 % CONSTRUCTION DOCUMENTS

REVISIONS		
REV	DATE	DESCRIPTION

Sheet Title
LIFE SAFETY PLAN - OVERALL PLANS

Date: MARCH 21, 2023
Sheet No:
G1.01



1 LIFE SAFETY PLAN - BASE PLAN
SCALE: 1/8" = 1'-0"

GENERAL NOTES

1 PER 2019 CBC SECTION 703.7: FIRE WALLS, FIRE BARRIERS, AND SMOKE PARTITIONS OR ANY OTHER WAL REQUIRED TO HAVE PROTECTED OPENINGS OR PENETRATIONS SHALL BE EFFECTIVELY AND PERMANENTLY IDENTIFIED WITH SIGNS OR STENCILING. SUCH IDENTIFICATION SHALL: (1) BE LOCATED WITHIN 15' OF THE END OF EACH WALL AND AT INTERVALS NOT EXCEEDING 30' MEASURED HORIZONTALLY ALONG THE WALL OR PARTITION; AND (3) INCLUDE LETTERING NOT LESS THAN 3" IN HEIGHT WITH A MINIMUM 3/8" STROKE IN A CONTRASTING COLOR INCORPORATING THE SUGGESTED WORKING: "FIRE AND/OR SMOKE BARRIER - PROTECT ALL OPENINGS" OR OTHER WORDING.

KEYNOTES

1 FIRE EXTINGUISHER

LEGEND

ROOM NAME
OCCUPANT LOAD
OCCUPANT LOAD FACTOR
AREA
ROOM NUMBER
1 HR FIRE PARTITION
2 HR FIRE PARTITION
SMOKE RESISTIVE PARTITION
PATH OF EGRESS TO EXIT DISCHARGE
EXIT DIRECTION AND NUMBER OF OCCUPANTS
MOST REMOTE POINT FOR TRAVEL DISTANCE
F.E.C. FIRE EXTINGUISHER CABINET - FINAL LOCATION TO BE FINALIZED BY CONTRACTOR AND LOCAL FIRE DEPARTMENT
EXIT SIGN, SEE ELECTRICAL DRAWINGS

tsk
225 South Arlington Avenue
Reno NV, 89501
phone: 775.857.2949
fax: 775.857.2403
www.tska.com

THESE DRAWINGS AND SPECIFICATIONS ARE THE PROPERTY OF TATE SNYDER KIMSEY ARCHITECTS AND MAY NOT BE REPRODUCED OR USED FOR ANY PURPOSE WITHOUT THE ARCHITECTS WRITTEN CONSENT. AS INSTRUMENTS OF SERVICE, THESE DOCUMENTS ARE NOT FINAL AND READY FOR USE, AND THEREFORE NOT VALID, UNLESS THEY ARE SEALED, SIGNED AND DATED.
Copyright, Ltd 2023

Consultant

PLEASE RECYCLE

Project
CITY OF FERNLEY CRRC

Job No: 21-058.00

Owner
CITY OF FERNLEY

50 % CONSTRUCTION DOCUMENTS

REVISIONS

REV	DATE	DESCRIPTION

Sheet Title
LIFE SAFETY PLAN - BASE BID

Date: MARCH 21, 2023
Sheet No:
G1.02

LEGEND

EXISTING		PROPOSED
4174	CONTOUR LINE	4174
+ 4163.1	GROUND ELEVATION	+ 4163.1
	TREE	
	ROCK	
	EDGE OF PAVEMENT	
	AC PAVING TO BE REMOVED	
	CURB & GUTTER	
	CONCRETE	
	UTILITY POLE	
	LIGHT	
	GUY WIRE	
ET	ELECTRIC TRANSFORMER	ET
EV	ELECTRIC VAULT	EV
EP	ELECTRIC PANEL	EP
EC	ELECTRIC CABINET	EC
EB	ELECTRIC BOX	EB
EM	ELECTRIC METER	EM
EG	ELECTRIC GENERATOR	EG
E	ELECTRIC MANHOLE	E
AC	AIR CONDITIONER	AC
	ELECTRIC OUTLET	
	BOLLARD	
SD	STORM DRAIN MANHOLE / DROP INLET	SD
	CATCH BASIN	
WV	WATER VALVE	WV
ICV	IRRIGATION CONTROL VALVE WATER	ICV
WM	METER	WM
WS	WATER SPIGOT / HOSE BIB WATER	WS
W	MANHOLE	W
WV	WATER VAULT	WV
	FIRE HYDRANT	
GV	GAS VALVE	GV
GM	GAS METER	GM
T	TELEPHONE MANHOLE	T
TB	TELEPHONE BOX	TB
TV	TELEPHONE VAULT	TV
S	SEWER MANHOLE	S
SSCO	SEWER CLEANOUT	SSCO
	SURVEY MONUMENT	
	CONTROL POINT	
	BARRICADE	
	SIGN	
	RETAINING WALL	
	FENCE	X
	GRADE BREAK	
	FLOW LINE	
	SOIL TEST PIT	
	DETAIL CALLOUT	X / CX.X
	COMM LINE	COMM
	GAS LINE	6"G
	ELECTRIC LINE	ELEC
	SEWER LINE	12" PVC SS
	WATER LINE	12" C900 W
AIR	AIR LINE	AIR
SD	STORM DRAIN	12" RCP SD
REC WL	RECLAIMED WATER LINE	REC WL

ABBREVIATIONS

AC	ASPHALT CONCRETE
ACP	ASBESTOS CEMENT PIPE
AGG	AGGREGATE
BC	BEGIN CURVE (HORIZONTAL)
BOW	BOTTOM OF WALL
BF, BOF	BOTTOM OF FOOTING
BV	BUTTERFLY VALVE
BVC	BEGIN VERTICAL CURVE
BW	BACK OF WALK
CB	CATCH BASIN
cfs	CUBIC FEET PER SECOND
CF	CUBIC FEET
C&G	CURB AND GUTTER
℄	CENTER LINE
CL	CLASS / CENTER LINE
CMP	CORRUGATED METAL PIPE
COMP	COMPACTION
CONC	CONCRETE
CONTR	CONTRACTOR
CP	CONCRETE PAD
CTV	CABLE TELEVISION
DI	DROP INLET
DIA	DIAMETER
DWY	DRIVEWAY
E	EAST
EA	EACH
EC	END CURVE (HORIZONTAL)
ELL	ELBOW
ELEC	ELECTRICAL
ELEV	ELEVATION
EVC	END VERTICAL CURVE
EX, (E)	EXISTING
EXT	EXTERIOR
FCA	FLANGE COUPLING ADAPTER
FE	FINISH ELEVATION
FES	FLARED END SECTION
FF	FINISH FLOOR
FFC	FRONT FACE OF CURB
FG	FINISH GRADE
FH	FIRE HYDRANT
FL	FLOW LINE
FLG	FLANGE
fps	FEET PER SECOND
FTG	FOOTING
G	GAS
GALV	GALVANIZED
GB	GRADE BREAK
GDW	GRAVEL DRIVEWAY
GD	GROUND
GV	GATE VALVE
H	HANDICAPPED
HGL	HYDRAULIC GRADE LINE
HORIZ	HORIZONTAL
HP	HIGH POINT
ID	INSIDE DIAMETER
IE	INVERT ELEVATION
INT	INTERSECTION
IRR	IRRIGATION
LAT	LATERAL
LF	LINEAR FEET
LP	LOW POINT
LT	LEFT
MAX	MAXIMUM
MDD	MAXIMUM DRY DENSITY
MH	MANHOLE
MIN	MINIMUM
MJ	MECHANICAL JOINT
MMD	MAXIMUM MARSHALL DENSITY
MUTCD	MANUAL FOR TRAFFIC CONTROL DEVICES
N	NORTH
NAP	NOT A PART
NIP	NOT IN PROJECT
NTS	NOT TO SCALE
OC	ON CENTER
OD	OUTSIDE DIAMETER
OH	OVERHEAD
(P)	PROPOSED
PCC	PORTLAND CEMENT CONCRETE
PG	PAD GRADE
PI	POINT OF INTERSECTION
PIVC	POINT OF INTERSECTION VERTICAL CURVE
PL	PROPERTY LINE
POCC	POINT OF COMPOUND CURVATURE
POT	POINT OF TANGENCY
PP	POWER POLE
PRC	POINT OF REVERSE CURVE
PRVC	POINT OF REVERSE VERTICAL CURVE
PVC	POLYVINYL CHLORIDE
PVMT	PAVEMENT
Q 5	5 YEAR PEAK FLOW
Q 100	100 YEAR PEAK FLOW
R	RADIUS
RCP	REINFORCED CONCRETE PIPE
REF	REFERENCE
RET	CURB RETURN
RP	RADIUS POINT
RT	RIGHT
R/W, ROW	RIGHT-OF-WAY
S=	SLOPE
S	SOUTH
SD	STORM DRAIN
SDMH	STORM DRAIN MANHOLE
SL	STREET LIGHT
SS	SANITARY SEWER
SSCO	SANITARY SEWER CLEAN OUT
SSMH	SANITARY SEWER MANHOLE
SSPWC	STANDARD SPEC. FOR PUBLIC WORKS CONSTRUCTION
STA	STATION
SW	SIDEWALK
TELE	TELEPHONE
TBO	TEMPORARY BLOW OFF VALVE
TC	TOP OF CURB, TOP OF CONC
TG	TO GRADE
TOB	TOP OF BERM
TF, TOF	TOP OF FOOTING
TOW	TOP OF WALL
TS	TRAFFIC SIGNAL
TSCB	TRAFFIC CONTROL SIGNAL BOX
TR	TOP OF RAIL
TRANS	TRANSITION
TYP	TYPICAL
UG/P	UNDER GROUND POWER
UNO	UNLESS NOTED OTHERWISE
V_{5}	VELOCITY AT 5 YEAR PEAK
VC	VERTICAL CURVE
VEL	VELOCITY
VERT	VERTICAL
VG	VALLEY GUTTER
W	WEST
W/G	WATER AND GAS
WL	WATER LINE
WM	WATER METER
WS	WATER SURFACE
WV	WATER VALVE
WWF	WELDED WIRE FABRIC
YR	YEAR

811 Know what's below. Call before you dig.

BASIS OF BEARING

THE BASIS OF BEARINGS FOR THIS SURVEY IS THE NEVADA STATE PLANE COORDINATE SYSTEM, WEST ZONE NAD83(94), AS DETERMINED FROM REAL TIME KINEMATIC GPS OBSERVATIONS, OBSERVED MARCH 25, 2022 USING A SURVEY GRADE DUAL FREQUENCY GPS RECEIVER WITH TRIMBLE VRS CORRECTIONS FROM CONTINUOUSLY OPERATING REFERENCE STATION (CORS) "FERNLEY" MODIFIED BY A COMBINED FACTOR OF 1.000245, SCALED FROM 0.00N ,0.00E AND CONVERTED TO U.S. SURVEY FEET. ALL DIMENSIONS ON THIS MAP ARE GROUND DISTANCES.

BASIS OF ELEVATION

DATUM: NAVD 88
PROJECT BENCHMARK = CORS) FERNLEY
HAVING AN ELEVATION OF 4188.84

NOTES:

GENERAL

1. ALL WORK SHALL CONFORM TO THE STANDARD SPECIFICATIONS FOR PUBLIC WORKS CONSTRUCTION (ORANGE BOOK), LATEST EDITION.
2. THE CONTRACTOR SHALL REFER TO THE STANDARD DETAILS FOR PUBLIC WORKS CONSTRUCTION, AS ADOPTED BY THE PERMITTING ENTITY, FOR ALL DETAILING NOT SHOWN ON THESE PLANS.
3. CONSTRUCTION SHALL COMPLY WITH THESE PLANS AND CURRENT CITY OF FERNLEY AND NDOT STANDARD PLANS/SPECIFICATIONS (STANDARD SPECIFICATIONS) AND MANUAL ON UNIFORM TRAFFIC CONTROL DEVICES (MUTCD).
4. THE CONTRACTOR SHALL BE RESPONSIBLE FOR ARRANGING A PRE-CONSTRUCTION JOB SITE CONFERENCE WITH GOVERNING AGENCIES INCLUDING THE CITY OF FERNLEY, ALL UTILITY COMPANIES, OWNER'S REPRESENTATIVES, AND THE PROJECT ENGINEER PRIOR TO COMMENCING WORK. THIS MEETING SHALL BE HELD AT LEAST FORTY-EIGHT (48) HOURS, OR TWO (2) BUSINESS DAYS, PRIOR TO THE START OF CONSTRUCTION AND SHALL COMMUNICATE SCHEDULES, CONTRACTORS MEAN AND METHODS, MATERIALS TO BE USED, AND OTHER RELEVANT MATTERS ASSOCIATED WITH THE CONSTRUCTION OF THE PROJECT.
5. AT THE COMPLETION OF CONSTRUCTION, THE CONTRACTOR SHALL SCHEDULE A FINAL WALK-THROUGH INSPECTION WITH THE PROJECT ENGINEER AND THE CITY OF FERNLEY. ALL CONSTRUCTION WILL BE SUBJECT TO FINAL APPROVAL BY THE PROJECT ENGINEER AND CITY OF FERNLEY. AT THE DISCRETION OF THE PROJECT ENGINEER, ALL IMPROVED AREAS SHALL BE SUBJECT TO A FLOW TEST TO ENSURE CONSTRUCTED GRADES MEET THE INTENT OF THE PLANS. IMPROVED AREAS DEVIATING FROM THESE PLANS THAT DO NOT ADEQUATELY DRAIN WILL BE REMOVED AND RECONSTRUCTED AT THE CONTRACTOR'S EXPENSE.
6. ALL WORK EITHER DIRECTLY OR INDIRECTLY RELATED TO THE PROJECT SHALL BE COORDINATED WITH THE APPROPRIATE UTILITY SYSTEM MANAGER.
7. THE CONTRACTOR SHALL MAINTAIN AN ONSITE RECORD COPY OF ALL DRAWINGS, SPECIFICATIONS, ADDENDA, CHANGE ORDERS, WORK CHANGE DIRECTIVES, FIELD ORDERS, FIELD CHANGES, AND WRITTEN INTERPRETATIONS AND CLARIFICATIONS. RECORDS SHALL BE IN GOOD ORDER AND ANNOTATED TO SHOW CHANGES MADE DURING CONSTRUCTION.
8. CONTRACTOR SHALL PROVIDE MATERIALS AND EQUIPMENT SUBMITTALS AND/OR SHOP DRAWINGS TO THE PROJECT ENGINEER FOR REVIEW PRIOR TO ORDERING OR INSTALLATION. A SIGNED SET OF REVIEWED SUBMITTALS MUST ALWAYS BE AVAILABLE ONSITE DURING CONSTRUCTION.
9. DETAILS NOT SHOWN ON THESE PLANS ARE PER ORANGE BOOK AND CITY OF FERNLEY STANDARDS.
10. THE CONTRACTOR SHALL CALL UNDERGROUND SERVICE ALERT AT 1-800-642-2444 TO PROVIDE FIELD LOCATIONS OF UNDERGROUND UTILITIES PRIOR TO THE START OF CONSTRUCTION.
11. THE LOCATION OF EXISTING UTILITIES SHOWN ON THESE PLANS ARE BASED ON THE BEST INFORMATION AVAILABLE TO THE ENGINEER. IT SHALL BE THE CONTRACTOR'S RESPONSIBILITY TO VERIFY PROPOSED POINTS OF CONNECTION AND IN AREAS OF POSSIBLE CONFLICT WITH NEW UTILITY INSTALLATION PRIOR TO BEGINNING CONSTRUCTION. SHOULD THE CONTRACTOR FIND ANY DISCREPANCIES BETWEEN THE CONDITIONS EXISTING IN THE FIELD AND THE INFORMATION SHOWN ON THESE DRAWINGS, THE CONTRACTOR SHALL NOTIFY THE ENGINEER BEFORE PROCEEDING WITH CONSTRUCTION. IT IS THE CONTRACTOR'S RESPONSIBILITY TO PROTECT AND MAINTAIN ALL EXISTING UTILITIES WHETHER OR NOT SHOWN ON THE PLAN.
12. THE CONTRACTOR SHALL BE RESPONSIBLE TO PROCURE ALL NECESSARY PERMITS, LICENSES, INSURANCE POLICIES, ETC. AS MAY BE NECESSARY TO COMPLY WITH LOCAL, COUNTY, STATE, AND FEDERAL LAWS ASSOCIATED WITH THE PERFORMANCE OF THE WORK; UNLESS OTHERWISE OBTAINED BY THE OWNER.
13. THE CONTRACTOR SHALL PREPARE A TRAFFIC CONTROL PLAN AND PROVIDE, PLACE, AND MAINTAIN ALL LIGHTS, SIGNS, BARRICADES, FLAG PERSONS, PILOT CAR, OR OTHER DEVICES NECESSARY TO CONTROL TRAFFIC THROUGH THE CONSTRUCTION AREA AND FOR PUBLIC SAFETY. ALL TRAFFIC CONTROL OPERATIONS SHALL COMPLY WITH THE LATEST MUTCD AND CONFORM TO THE NEVADA WORK ZONE TRAFFIC CONTROL HANDBOOK AND CITY OF FERNLEY REQUIREMENTS. AT NO TIME WILL OBSTRUCTIONS BE LEFT IN THE ROADWAY DURING NIGHT HOURS. ALL TRAFFIC CONTROL PLANS SHALL BE PREPARED BY A REGISTERED CIVIL ENGINEER OR ATTSA CERTIFIED PERSONNEL.
14. THE CONTRACTOR AGREES TO ASSUME SOLE RESPONSIBILITY FOR JOB SITE CONDITIONS DURING THE COURSE OF CONSTRUCTION OF THIS PROJECT, INCLUDING SAFETY OF ALL PERSONS AND PROPERTY, AND FURTHER AGREES THAT THIS REQUIREMENT SHALL APPLY CONTINUOUSLY AND NOT BE LIMITED TO NORMAL WORKING HOURS IN ACCORDANCE WITH THE PROVISIONS OUTLINED BY THE PROJECT CONTROL AND THE STANDARD SPECIFICATIONS.
15. THE CONTRACTOR SHALL BE SOLELY AND COMPLETELY RESPONSIBLE FOR COMPLIANCE WITH ALL APPLICABLE PROVISIONS OF OSHA AND NRS CHAPTER 618.
16. THE CONTRACTOR SHALL PURSUE THE WORK IN A CONTINUOUS AND DILIGENT MANNER, CONFORMING TO ALL THE PERTINENT SAFETY REGULATIONS TO ENSURE A TIMELY COMPLETION OF THE PROJECT.
17. THE CONTRACTOR SHALL MAINTAIN A CLEAN PROJECT SITE, REMOVING CONSTRUCTION DEBRIS AT THE END OF EACH ACTIVITY DAY. THE CONTRACTOR SHALL MAINTAIN DEBRIS FREE CONSTRUCTION ROUTES, ADJACENT STREETS AND STORM DRAIN SYSTEMS.
18. TEMPORARY CONSTRUCTION FENCING SHALL BE PROVIDED AND MAINTAINED BY THE CONTRACTOR THROUGHOUT THE DURATION OF THE PROJECT IN AREAS AS DELINEATED ON THE PLANS OR AS DIRECTED BY THE PROJECT ENGINEER. THE TEMPORARY FENCING SHALL PREVENT CHILDREN AND PETS FROM ENTERING THE CONSTRUCTION AREA, CREATE A VISUAL BARRIER OF THE CONSTRUCTION ACTIVITIES FROM THE ADJACENT RESIDENCE AND YARDS, AND PROTECT VEGETATION FROM CONSTRUCTION EQUIPMENT.
19. THE CONTRACTOR SHALL USE ONLY AUTHORIZED SITES FOR STORAGE OF EQUIPMENT AND MATERIALS AND OBTAIN PROPER APPROVALS FROM THE LAND OWNER AND LOCAL GOVERNING AUTHORITY TO DO SO. CONTRACTOR SHALL BE RESPONSIBLE FOR THE SECURITY OF ALL EQUIPMENT AND MATERIALS.
20. CONTRACTOR SHALL BE RESPONSIBLE FOR THE PROTECTION OF ALL EXISTING SURVEY MONUMENTS AND OTHER SURVEY MARKERS DURING CONSTRUCTION. IN THE EVENT A MONUMENT IS DISTURBED, THE CONTRACTOR SHALL HAVE THE MONUMENT REPLACED, AT HIS OWN EXPENSE, BY A LICENSED SURVEYOR IN THE STATE OF THE PROJECT SITE.
21. CONSTRUCTION HOURS SHALL BE WEEKDAYS BETWEEN 7:00 AM AND 6:00 PM UNLESS OTHERWISE DICTATED BY LOCAL ORDINANCE. CONTRACTOR SHALL OBTAIN APPROVAL FROM THE PROJECT ENGINEER TO MODIFY WORK HOURS.
22. ALL FIELD CHANGES MUST BE PRE-APPROVED BY THE PROJECT ENGINEER.
23. SHOULD IT APPEAR THAT THE WORK TO BE DONE, OR ANY MATTER RELATIVE THERETO, IS NOT SUFFICIENTLY DETAILED OR EXPLAINED ON THESE PLANS, THE CONTRACTOR SHALL CONTACT THE PROJECT ENGINEER FOR SUCH FURTHER EXPLANATIONS AS MAY BE NECESSARY.
24. ALL SALVAGED MATERIALS ARE THE PROPERTY OF THE OWNER AND SHALL BE PALLETIZED ONSITE UNLESS OTHERWISE ARRANGED WITH THE OWNER AND/OR PROJECT ENGINEER.
25. ALL WORK SHALL BE COORDINATED WITH THE PROJECT ENGINEER AND CITY OF FERNLEY. NO ADDITIONAL PAYMENTS FOR EXTRA WORK WILL BE MADE TO THE CONTRACTOR WITHOUT PRIOR WRITTEN AUTHORIZATION BY THE PROJECT ENGINEER OR CITY OF FERNLEY.
26. THE OWNER IS RESPONSIBLE FOR FURNISHING QUALIFIED SITE INSPECTIONS AS REQUIRED TO COMPLY WITH LOCAL ORDINANCES.
27. A GEOTECHNICAL INVESTIGATION WAS PERFORMED ON THIS PROJECT. ALL RECOMMENDATIONS INCLUDED IN THE REPORT ARE HEREBY MADE A PART OF THE CONSTRUCTION DOCUMENTS UNLESS MODIFIED WITHIN THESE PLANS. INSPECTION AND TESTING DURING CONSTRUCTION SHALL BE REQUIRED IN ACCORDANCE WITH THE RECOMMENDATIONS CONTAINED WITHIN THE REPORT.
    TITLE: GEOTECHNCIAL INVESTIGATION REPORT, FERNLEY COMMUNITY CENTER COMPLEX, APRIL, 2022 BY LUMOS & ASSOCIATES

UNDERGROUND UTILITIES

28. THE CONTRACTOR SHALL FIELD VERIFY UTILITY LOCATIONS NEAR OR WITHIN THE CONSTRUCTION LIMITS WITH THE RESPECTIVE UTILITY COMPANIES PRIOR TO BEGINNING CONSTRUCTION. IT SHALL BE THE RESPONSIBILITY OF THE CONTRACTOR TO ARRANGE FOR THE NECESSARY RELOCATION OF ANY UTILITY. THE CONTRACTOR SHALL NOTIFY ALL UTILITY COMPANIES INVOLVED AT LEAST FORTY-EIGHT (48) HOURS PRIOR TO BEGINNING WORK.
29. NO OTHER UTILITIES MAY BE PLACED IN A WATER OR SEWER TRENCH.
30. ALL VALVE BOXES, MANHOLE STRUCTURES, AND CLEAN OUTS SHALL BE MARKED AND ACCESSIBLE AT ALL TIMES.
31. CONTRACTOR SHALL SUPPORT TRENCH SIDEWALLS IN ACCORDANCE WITH ALL APPLICABLE LAWS AND GOVERNING SAFETY REGULATIONS. SHEETING OR SHORING SHALL CONFORM TO LOCAL REGULATIONS AND OSHA STANDARDS.
32. ENDS OF UNFINISHED PIPE SHALL BE SEALED AT THE END OF EACH DAY.
33. PIPE SHALL BE LAID IN THE UPHILL DIRECTION, WITH BELL ENDS UPHILL.
34. THE CONTRACTOR SHALL COORDINATE ALL WATER MAIN SHUT DOWNS AND TIE-INS WITH THE WATER UTILITY A MINIMUM OF FORTY-EIGHT (48) HOURS OR TWO (2) BUSINESS DAYS IN ADVANCE.
35. ALL UNDERGROUND VALVES, TEES, FITTINGS, ETC. LARGER THAN 2" SHALL BE COATED TO PROTECT AGAINST CORROSION.
36. ALL WATER PROJECT MATERIAL (PIPES, VALVES, LATERALS AND APPURTENANCES) SHALL BE LEAD FREE AND MEET THE MINIMUM REQUIREMENTS OF THE NEVADA ADMINISTRATIVE CODE AND NSF/ANSI 61.
37. ALL THRUST BLOCKS SHALL BE INSPECTED PRIOR TO BACK-FILL.
38. ALL BOLTS AT THRUST BLOCKS AND VALVE SADDLES SHALL BE COVERED WITH VISQUEEN AND TAPED PRIOR TO CONCRETE PLACEMENT.
39. THE WATER MAINS SHALL NOT BE PLACED INTO SERVICE UNTIL:
    a. THE WATER MAIN HAS BEEN DISINFECTED IN ACCORDANCE WITH AWWA, NEVADA DEPARTMENT OF ENVIRONMENTAL PROTECTION (NDEP), THE STANDARD SPECIFICATIONS FOR PUBLIC WORKS CONSTRUCTIONS STANDARDS.
    b. THE DISPOSAL OF ANY SPENT CHLORINE SOLUTIONS MUST BE COORDINATED WITH NDEP'S BUREAU OF WATER POLLUTION CONTROL.
    c. ANALYSIS OF THE WATER MAIN WHICH INDICATE THAT THE WATER MEETS PRIMARY DRINKING WATER STANDARDS FOR COLIFORM BACTERIA (ABSENT FOR COLIFORM BACTERIA) HAVE BEEN OBTAINED AND REPORTED TO NDEP'S BUREAU OF SAFE DRINKING WATER. SAMPLING SHALL BE IN ACCORDANCE WITH NDEP REGULATIONS.
37. PVC PIPE SHALL BE TESTED PER AWWA C605 AND DUCTILE IRON PIPE SHALL BE TESTED FOR AWWA C600. OTHER MATERIALS SHALL BE TESTED PER REQUIREMENTS IN THE STANDARD SPECIFICATION FOR PUBLIC WORKS CONSTRUCTION SECTION 336.
38. CONTRACTOR SHALL CONDUCT PIPING TESTS BEFORE JOINTS ARE COVERED AND AFTER THRUST BLOCKS HAVE HARDENED SUFFICIENTLY. FILL PIPELINE 24 HOURS BEFORE TESTING AND APPLY TEST PRESSURE TO STABILIZE SYSTEM. USE ONLY POTABLE WATER.
39. CONTRACTOR SHALL PERFORM PLASTIC PIPE BALL AND MANDREL TEST ON NEWLY INSTALLED SEWER PIPE IN ACCORDANCE WITH THE STANDARD SPECIFICATIONS FOR PUBLIC WORKS CONSTRUCTION.
40. CONTRACTOR SHALL PERFORM AIR PRESSURE TESTING ON NEWLY INSTALLED SEWER PIPE IN ACCORDANCE WITH THE STANDARD SPECIFICATIONS FOR PUBLIC WORKS CONSTRUCTIONS.

GRADING, EXCAVATION & SURFACE IMPROVEMENTS

41. THE CONTRACTOR IS RESPONSIBLE FOR PERFORMING THEIR OWN QUANTITY TAKE-OFF AND SHALL BUDGET THE PROJECT ACCORDINGLY. ALL EXCESS GRADING MATERIALS SHALL BE DISPOSED OF OFFSITE.
42. ALL EARTHWORK ACTIVITIES SHALL BE IN ACCORDANCE WITH THE PROJECT'S GEOTECHNICAL REPORT.
43. THE SOILS ENGINEER SHALL APPROVE ALL EARTHWORK AND GRADING TO CONFIRM COMPACTION REQUIREMENTS ARE MET.
44. CONTRACTOR SHALL PROTECT EXISTING PAVING, CONCRETE, LANDSCAPING, FENCING, MAILBOXES, SIGNS AND ANY OTHER IMPROVEMENTS NOT SPECIFICALLY CALLED OUT FOR REPLACEMENT. CONTRACTOR SHALL REPAIR/REPLACE ANYTHING DAMAGED BY FORCES UNDER THEIR EMPLOY OR CONTRACT.
45. ALL ASPHALT CONCRETE SURFACES SHALL BE SAWCUT THREE FEET MINIMUM INSIDE THE EDGE OF PAVEMENT TO A NEAT, STRAIGHT LINE AND REMOVED. THE EXPOSED PAVEMENT TIE-IN EDGES SHALL BE METICULOUSLY CLEANED OF ALL LOOSE MATERIAL AND THEN TREATED WITH BITUMINOUS EMULSION PRIOR TO PAVING. THE EXPOSED BASE MATERIALS SHALL BE GRADED AND RECOMPACTED PRIOR TO PAVING.

ENVIRONMENTAL

46. ALL CONSTRUCTION SHALL BE PERFORMED IN COMPLIANCE WITH THE NATIONAL POLLUTANT DISCHARGE ELIMINATION SYSTEM (NPDES). CONTRACTOR IS RESPONSIBLE FOR ACQUIRING AND MAINTAINING A SWPPP.
47. INSTALLATION AND MAINTENANCE OF EROSION CONTROL MEASURES ARE THE RESPONSIBILITY OF THE CONTRACTOR. THE CONTRACTOR SHALL BE RESPONSIBLE FOR THE PREVENTION OF EROSION AND SILTATION FROM ENTERING THE STORM DRAIN SYSTEM, NATURAL DRAINAGE COURSES, AND/OR INTRUDING UPON ADJACENT ROADWAYS AND PROPERTIES. EROSION CONTROL MEASURES SHOWN ON THESE PLANS ARE INTENDED AS A GUIDE. ADDITIONAL EROSION CONTROL MEASURES MAY BE REQUIRED AS DETERMINED IN THE FIELD. THIS RESPONSIBILITY SHALL APPLY THROUGHOUT THE COURSE OF CONSTRUCTION AND UNTIL ALL DISTURBED AREAS HAVE BECOME STABILIZED AND SHALL NOT BE LIMITED TO WET WEATHER PERIODS. THE CONTRACTOR IS RESPONSIBLE FOR SWPPP UPDATES.
48. THE CONTRACTOR SHALL MAINTAIN AN ON-GOING DUST CONTROL PROGRAM INCLUDING WATERING OF OPEN AREAS, TO CONFORM WITH THE LATEST FEDERAL, STATE, AND COUNTY AIR POLLUTION REGULATIONS. CONTRACTOR IS RESPONSIBLE FOR OBTAINING AND UPDATING DUST CONTROL PERMITS FOR THE PROJECT.
49. ALL AREAS DISTURBED AND LEFT UNDEVELOPED FOR A PERIOD OF MORE THAN 30 DAYS SHALL BE STABILIZED BY THE APPLICATION OF AN APPROVED DUST PALLIATIVE OR HYDROMULCH.
50. THE CONTRACTOR SHALL IDENTIFY A STANDBY CREW FOR EMERGENCY WORK AND THEY SHALL BE AVAILABLE AT ALL TIMES. MATERIAL NECESSARY TO FACILITATE RAPID CONSTRUCTION OF TEMPORARY DEVICES OR TO REPAIR DAMAGED EROSION CONTROL MEASURES SHALL BE AVAILABLE ON-SITE AND STOCKPILED AT APPROVED LOCATIONS.
51. PROTECTIVE MEASURES AND TEMPORARY DRAINAGE PROVISIONS SHALL BE USED TO PROTECT ADJOINING PROPERTIES DURING CONSTRUCTION OF IMPROVEMENTS.
52. AFTER A RAINSTORM, ALL SILT AND DEBRIS SHALL BE REMOVED FROM CHECK BERMS AND DESILTING FACILITIES. GRADED SLOPE SURFACE PROTECTION MEASURES DAMAGED DURING THE RAINSTORM SHALL ALSO BE REPAIRED.
53. FILL SLOPES AT THE PROJECT PERIMETER MUST DRAIN AWAY FROM THE TOP OF THE SLOPE AT THE END OF EACH WORKING DAY.
54. ALL DISTURBED AREAS ARE REQUIRED TO HAVE A PALLIATIVE APPLIED FOR DUST CONTROL. ALL GRADING SHALL COMPLY WITH STATE AND COUNTY REGULATIONS.
55. A SIX-FOOT HIGH PERIMETER FENCE OR A 24-HOUR GUARD SHALL BE POSTED ON THE SITE WHENEVER THE DEPTH OF WATER IN A FACILITY EXCEEDS 18".
56. ALL AREAS DISTURBED BECAUSE OF THE WORK SHALL BE REVEGETATED IN ACCORDANCE WITH INDUSTRY BEST MANAGEMENT PRACTICES.
57. NO CONSTRUCTION MATERIALS SHALL BE STORED IN A STREAM ENVIRONMENT ZONES (SEZ) AT ANY TIME.
58. IF GROUNDWATER IS ENCOUNTERED, THE CONTRACTOR SHALL STOP WORK IMMEDIATELY, PREPARE A DEWATERING PLAN, AND OBTAIN APPROVAL FROM THE PROJECT ENGINEER BEFORE PROCEEDING WITH WORK. DEWATERING ACTIVITIES MAY REQUIRE THE CONTRACTOR TO OBTAIN A DISCHARGE/PUMPING PERMIT FROM THE STATE. IT SHALL BE THE CONTRACTOR'S RESPONSIBILITY TO OBTAIN SUCH PERMITS.
59. ALL STREETS SHALL BE MAINTAINED FREE OF DUST AND MUD CAUSED BY GRADING OPERATIONS.

tsk
225 South Arlington Avenue
Reno NV, 89501
phone: 775.857.2949
fax: 775.857.2403
www.tska.com

THESE DRAWINGS AND SPECIFICATIONS ARE THE PROPERTY OF TATE SNYDER KIMSEY ARCHITECTS AND MAY NOT BE REPRODUCED OR USED FOR ANY PURPOSE WITHOUT THE ARCHITECTS WRITTEN CONSENT. AS INSTRUMENTS OF SERVICE, THESE DOCUMENTS ARE NOT FINAL AND READY FOR USE, AND THEREFORE NOT VALID, UNLESS THEY ARE SEALED, SIGNED AND DATED.

Copyright, Ltd 2023

Consultant

LUMOS & ASSOCIATES
9222 PROTOTYPE DRIVE
RENO, NV 89521
TEL: 775.827.6111
WWW.LUMOSINC.COM
INFO@LUMOSINC.COM

PLEASE RECYCLE

Project
CITY OF FERNLEY
CRRC

Job No: 21-058.00

Owner
CITY OF FERNLEY

50% CONSTRUCTION DOCUMENT

REVISIONS		
REV	DATE	DESCRIPTION

Sheet Title
NOTES

Date: MARCH 21, 2023
Sheet No:
C1.00

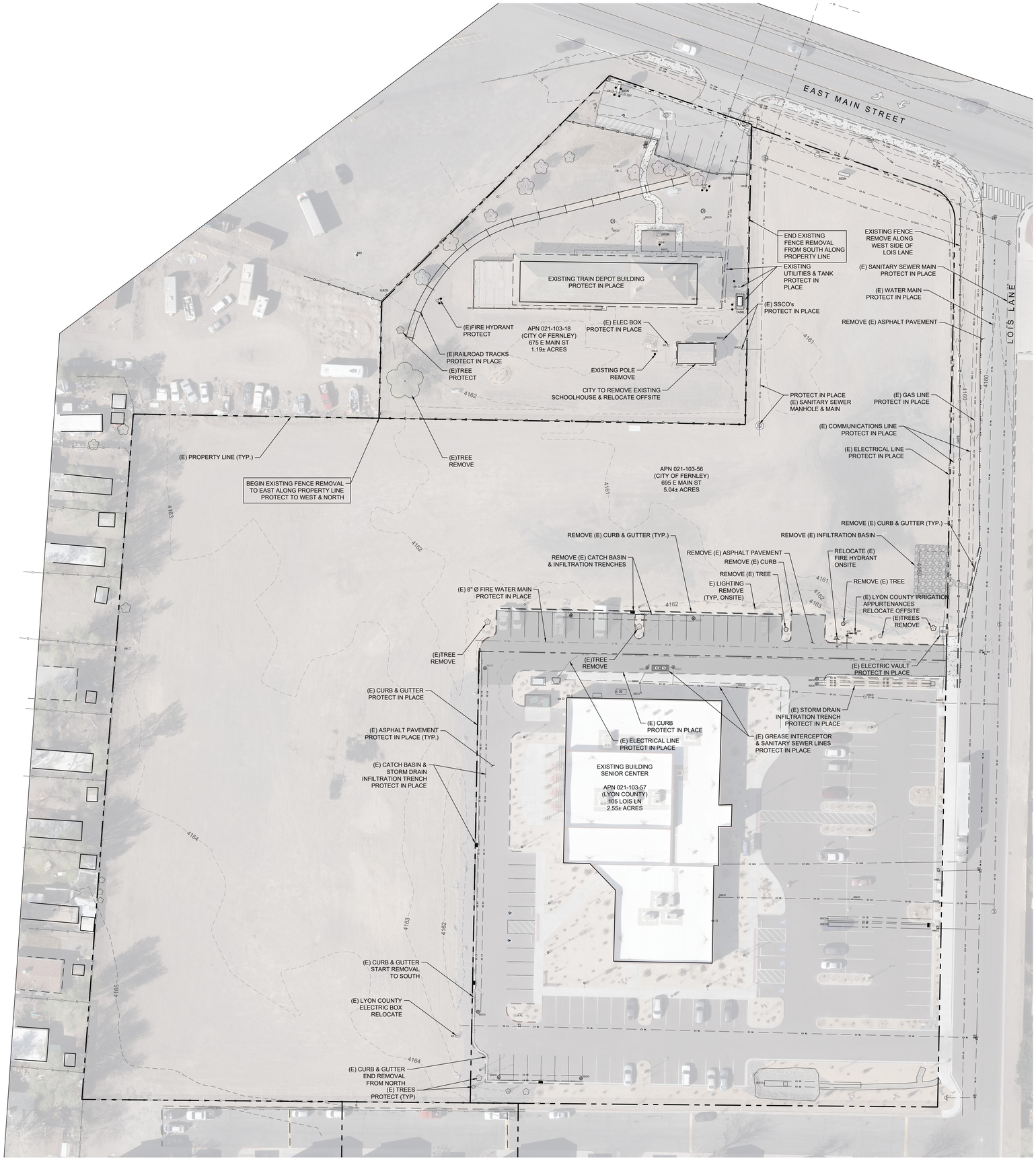

N

0 30' 60'

SCALE: 1" = 30'

tsk
225 South Arlington Avenue
Reno NV, 89501
phone: 775.857.2949
fax: 775.857.2403
www.tska.com

THESE DRAWINGS AND SPECIFICATIONS ARE THE PROPERTY OF TATE SNYDER KIMSEY ARCHITECTS AND MAY NOT BE REPRODUCED OR USED FOR ANY PURPOSE WITHOUT THE ARCHITECTS WRITTEN CONSENT. AS INSTRUMENTS OF SERVICE, THESE DOCUMENTS ARE NOT FINAL AND READY FOR USE, AND THEREFORE NOT VALID, UNLESS THEY ARE SEALED, SIGNED AND DATED.

Copyright, Ltd 2023

Consultant

LUMOS & ASSOCIATES
9222 PROTOTYPE DRIVE
RENO, NV 89521
TEL: 775.827.6111
WWW.LUMOSINC.COM
INFO@LUMOSINC.COM

PLEASE RECYCLE

Project

CITY OF FERNLEY CRRC

Job No: 21-058.00

Owner

CITY OF FERNLEY

50% CONSTRUCTION DOCUMENTS

REVISIONS		
REV	DATE	DESCRIPTION

Sheet Title

EXISTING CONDITIONS & DEMOLITION

Date: MARCH 21, 2023

Sheet No:

C1.01

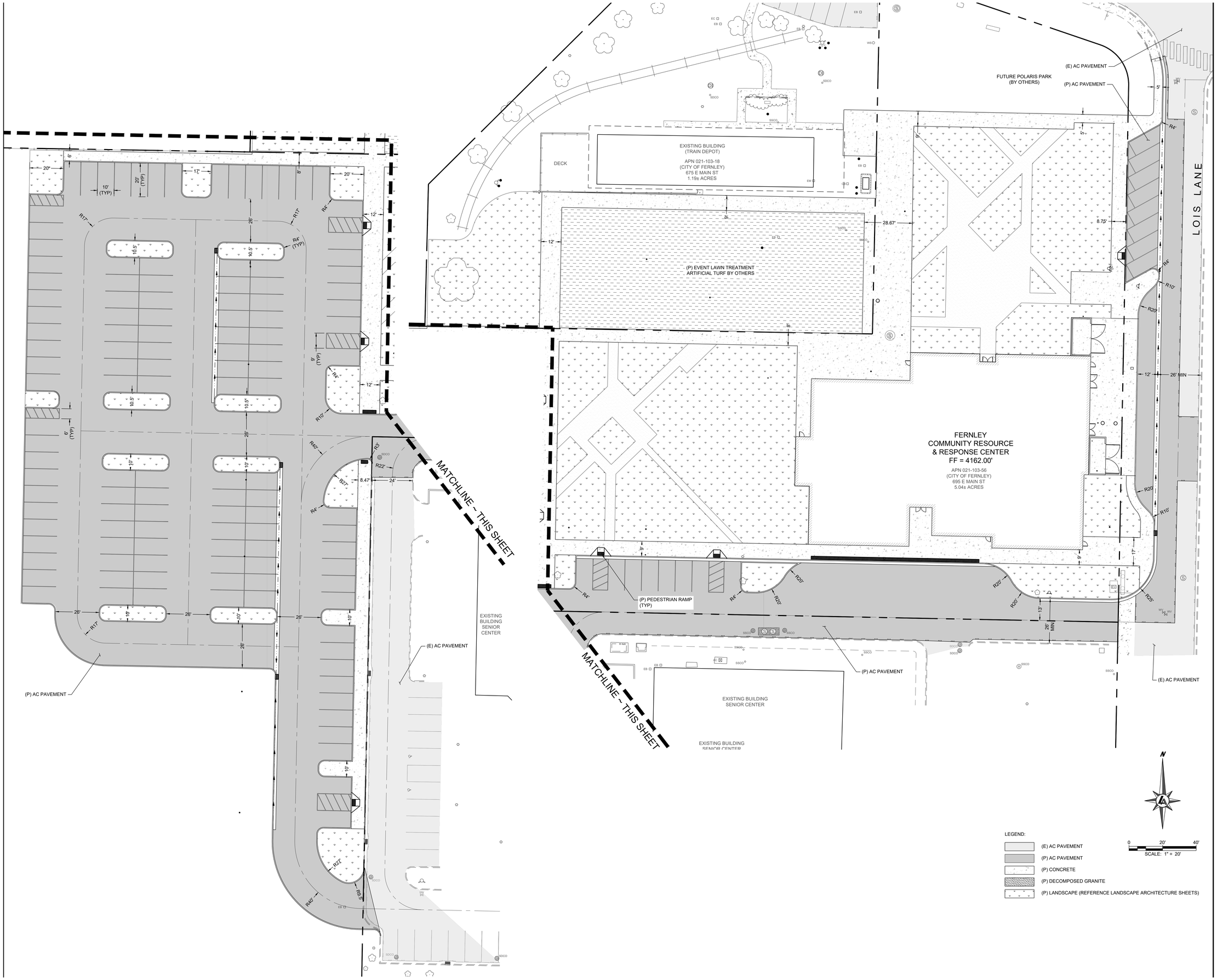

tsk
225 South Arlington Avenue
Reno NV, 89501
phone: 775.857.2949
fax: 775.857.2403
www.tska.com

THESE DRAWINGS AND SPECIFICATIONS ARE THE PROPERTY OF TATE SNYDER KIMSEY ARCHITECTS AND MAY NOT BE REPRODUCED OR USED FOR ANY PURPOSE WITHOUT THE ARCHITECTS WRITTEN CONSENT. AS INSTRUMENTS OF SERVICE, THESE DOCUMENTS ARE NOT FINAL AND READY FOR USE, AND THEREFORE NOT VALID, UNLESS THEY ARE SEALED, SIGNED AND DATED.

Copyright, Ltd 2023

Consultant

LUMOS & ASSOCIATES
9222 PROTOTYPE DRIVE
RENO, NV 89521
TEL: 775.827.6111
WWW.LUMOSINC.COM
INFO@LUMOSINC.COM

PLEASE RECYCLE

Project
CITY OF FERNLEY
CRRC

Job No: 21-058.00

Owner
CITY OF FERNLEY

50% CONSTRUCTION DOCUMENT

REVISIONS		
REV	DATE	DESCRIPTION

Sheet Title
SITE PLAN
BASE BID

Date: MARCH 21, 2023
Sheet No:

C2.00

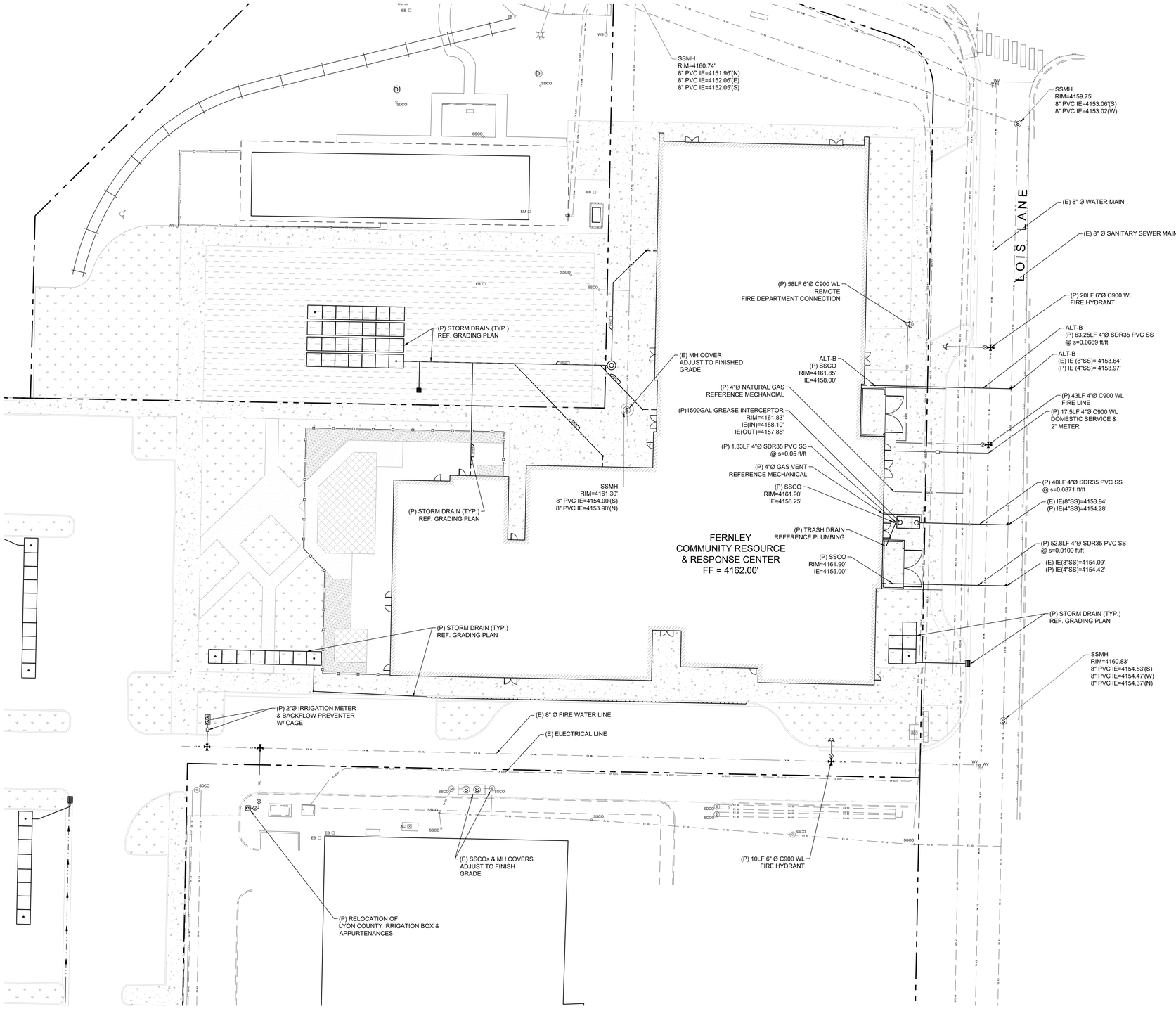

N

0 20' 40'

SCALE: 1" = 20'

tsk
225 South Arlington Avenue
Reno NV, 89501
phone: 775.857.2949
fax: 775.857.2403
www.tska.com

THESE DRAWINGS AND SPECIFICATIONS ARE THE PROPERTY OF TATE SNYDER KIMSEY ARCHITECTS AND MAY NOT BE REPRODUCED OR USED FOR ANY PURPOSE WITHOUT THE ARCHITECTS WRITTEN CONSENT. AS INSTRUMENTS OF SERVICE, THESE DOCUMENTS ARE NOT FINAL AND READY FOR USE, AND THEREFORE NOT VALID, UNLESS THEY ARE SEALED, SIGNED AND DATED.

Copyright, Ltd 2023

Consultant

LUMOS & ASSOCIATES
9222 PROTOTYPE DRIVE
RENO, NV 89521
TEL: 775.827.6111
WWW.LUMOSINC.COM
INFO@LUMOSINC.COM

PLEASE RECYCLE

Project

CITY OF FERNLEY CRRC

Job No: 21-058.00

Owner

CITY OF FERNLEY

50% CONSTRUCTION DOCUMENTS

REVISIONS		
REV	DATE	DESCRIPTION

Sheet Title

UTILITY PLAN

Date: MARCH 21, 2023

Sheet No:

C3.00

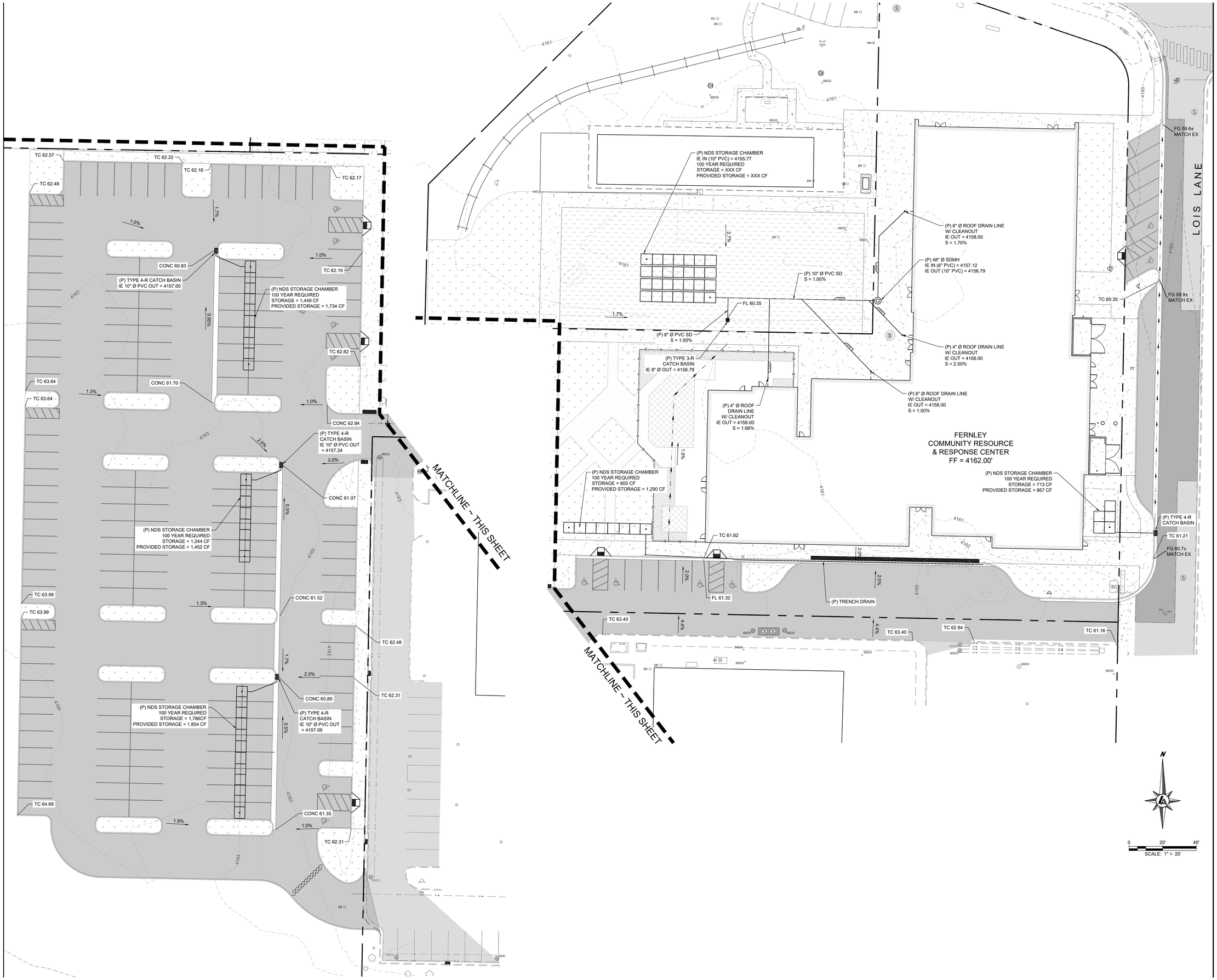

tsk
225 South Arlington Avenue
Reno NV, 89501
phone: 775.857.2949
fax: 775.857.2403
www.tska.com

THESE DRAWINGS AND SPECIFICATIONS ARE THE PROPERTY OF TATE SNYDER KIMSEY ARCHITECTS AND MAY NOT BE REPRODUCED OR USED FOR ANY PURPOSE WITHOUT THE ARCHITECTS WRITTEN CONSENT. AS INSTRUMENTS OF SERVICE, THESE DOCUMENTS ARE NOT FINAL AND READY FOR USE, AND THEREFORE NOT VALID, UNLESS THEY ARE SEALED, SIGNED AND DATED.

Copyright, Ltd 2023

Consultant

LUMOS & ASSOCIATES
9222 PROTOTYPE DRIVE
RENO, NV 89521
TEL: 775.827.6111
WWW.LUMOSINC.COM
INFO@LUMOSINC.COM

PLEASE RECYCLE

Project

CITY OF FERNLEY
CRRC

Job No: 21-058.00

Owner

CITY OF FERNLEY

50% CONSTRUCTION DOCUMENTS

REVISIONS		
REV	DATE	DESCRIPTION

Sheet Title

GRADING PLAN

Date: MARCH 21, 2023

Sheet No:

C4.00

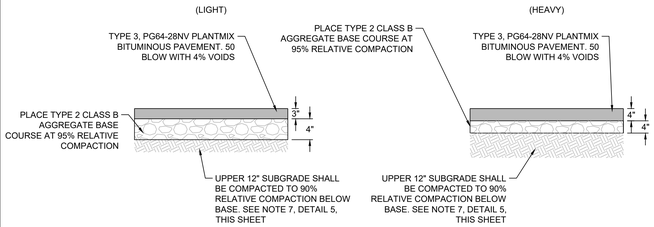

NOTE:
REFERENCE GEOTECHNICAL INVESTIGATION BY LUMOS & ASSOCIATES

1 C5.00 PAVEMENT SECTION
SCALE: NTS

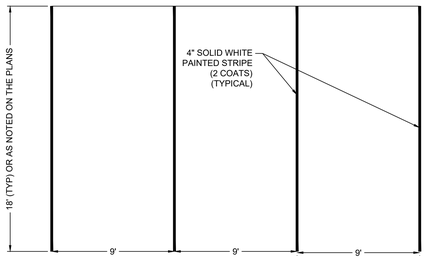

NOTE:
ALL PRIVATE PAVEMENT MARKING AND STRIPING SHALL MEET THE STANDARDS FOR TRAFFIC PAINT AND BE INSTALLED IN ACCORDANCE WITH SPECIFICATIONS 214.00 AND 324.00 OF THE STANDARD SPECIFICATIONS FOR PUBLIC WORKS CONSTRUCTION (LATEST EDITION).

2 C5.00 STANDARD PARKING DETAIL
SCALE: NTS

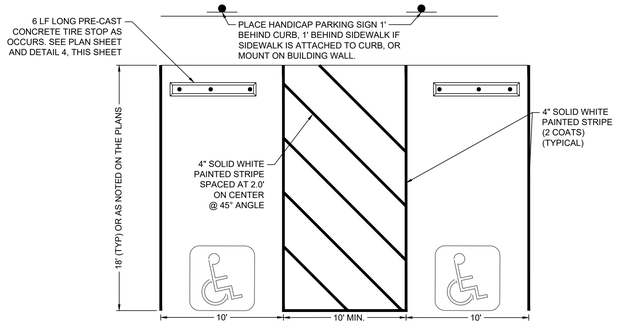

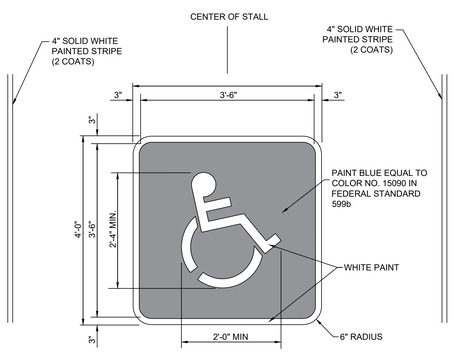

*SYMBOL AND BORDER TO HAVE 3" WIDE STROKE

3 C5.00 ADA PARKING DETAIL
SCALE: NTS

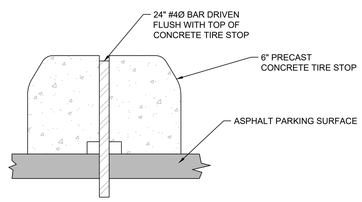

4 C5.00 PRECAST P.C.C. WHEEL STOP
SCALE: NTS

NOTES:

1. ALL BITUMINOUS PLANTMIX PAVEMENT SHALL CONFORM TO THE STANDARD SPECIFICATIONS FOR PUBLIC WORKS CONSTRUCTION (SSPWC), LATEST EDITION.
2. BITUMINOUS PLANTMIX SHALL BE COMPACTED TO 92% THEORETICAL MAXIMUM RICE SPECIFIC GRAVITY (MINIMUM) IN ALL PLACEMENT LOCATIONS.
3. AGGREGATE BASE MATERIAL SHALL BE TYPE 2, CLASS B CRUSHED AGGREGATE BASE COMPACTED TO 95% RELATIVE COMPACTION. MATERIALS SHALL CONFORM TO SSPWC SECTION 200. AGGREGATE BASE SHALL BE COMPACTED BY A MINIMUM OF FIVE PASSES WITH A MINIMUM 10-TON DRUM ROLLER.
4. NO PAVING OPERATIONS SHALL OCCUR UNTIL A TEMPERATURE OF 40 DEGREES FAHRENHEIT AND RISING IS OBTAINED. NO PAVING OPERATIONS SHALL OCCUR ON FROZEN SUBGRADE.
5. MISCELLANEOUS PAVEMENT AREAS INCLUDING UTILITY ACCESS ROADS MAY BE 50 BLOW TYPE 2 OR TYPE 3 ASPHALT WITH 3% AIR VOIDS.
6. ASPHALT AND BASE THICKNESS SHALL BE THICKENED FOR PAVEMENT CUTS IN PUBLIC RIGHT-OF-WAY PURSUANT TO CITY STANDARDS.
7. THE UPPER 12" OF SUBGRADE BELOW ALL ASPHALT PAVING AND CONCRETE FLATWORK SHALL BE SUITABLE STRUCTURAL GRADE MATERIAL OR IT SHALL BE REMOVED AND REPLACED WITH STRUCTURAL FILL OR CLASS E MATERIAL MEETING STRUCTURAL FILL REQUIREMENTS PURSUANT TO THE GEOTECHNICAL REPORT.
8. A TACK COAT OF SS-1h ASPHALT EMULSION, DILUTED WITH 50-50 WATER, SHALL BE APPLIED TO ALL VERTICAL ASPHALT OR CONCRETE JOINT SURFACES PRIOR TO PLACEMENT OF PLANTMIX BITUMINOUS PAVEMENT. THE APPLICATION RATE SHALL BE 0.10 TO 0.15 GALLONS PER SQUARE YARD.
9. WHEN MORE THAN ONE COURSE OF ASPHALT CONCRETE IS PLACED, THE SURFACE OF THE FIRST COURSE SHALL BE TREATED WITH A TACK COAT OF SS-1h ASPHALT EMULSION, DILUTED 50-50 WITH WATER, APPLIED AT THE RATE OF 0.05 TO 0.10 GALLONS PER SQUARE YARD.
10. A FOG SEAL COAT OF SS-1h ASPHALT EMULSION, DILUTED 50-50 WITH WATER SHALL BE APPLIED TO ALL COMPLETED ASPHALT SURFACES IN ACCORDANCE WITH SSPWC 317.03.05. THE FOG SEAL SHALL BE APPLIED AT THE RATE OF 0.07-0.12 GALLONS PER SQUARE YARD. APPLICATION SHALL NOT COMMENCE UNTIL AT LEAST TWENTY-FOUR (24) HOURS AFTER FINAL ROLLING. THE PAVEMENT TEMPERATURE SHALL BE AT LEAST 65 DEGREES FAHRENHEIT AT THE TIME OF APPLICATION, AND THE AMBIENT TEMPERATURE SHALL BE AT LEAST 50 DEGREES FAHRENHEIT.
11. USE OF RECYCLED AGGREGATE BASE ON PRIVATE IMPROVEMENTS SHALL BE SUBJECT TO THE DISCRETION OF THE GEOTECHNICAL ENGINEER AND MAY BE SUBJECT TO ADDITIONAL TESTING REQUIREMENTS.

5 C5.00 ROAD SECTION NOTES
SCALE: NTS

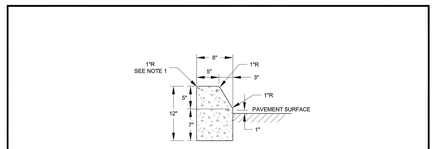

TYPE 1 P.C.C. MEDIAN CURB

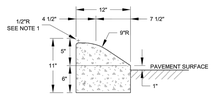

TYPE 3 P.C.C. MEDIAN CURB

NOTES:
1. RADIUS TO BE 1/2 INCH, OMIT ROUNDING IF CURBS ARE BACK TO BACK.
2. SEE CONCRETE WORK GENERAL NOTE 2.

MEDIAN CURB	Detail No. 140 STREETS	DATE	REVISIONS	BY
		06/07	DETAIL ADDED	EB

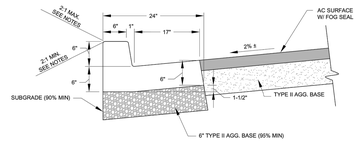

NOTES:
1. SEE CONCRETE WORK GENERAL NOTE 2.
2. ALL CONCRETE CURB, GUTTER, AND SIDEWALK SHALL HAVE 1/2" EXPANSION JOINTS AT ALL CURB RETURNS AND SHALL HAVE WEAKENED PLANE JOINTS EVERY 10 FEET.
3. AGGREGATE BASE MATERIAL SHALL CONFORM TO THE SPECIFICATIONS FOR TYPE 2 CLASS B AGGREGATE BASE AND BE COMP. TO A MIN. 95% MAX. DRY DENSITY.
4. ALL MATERIALS SHALL CONFORM TO SSPWC CURRENT EDITION.
5. FOR SLOPE STABILIZATION REFER TO SECTION 3.4.9 OF CURRENT CITY OF FERNLEY DESIGN STANDARDS.

TYPE I CURB & GUTTER	Detail No. 138 STREETS	DATE	REVISIONS	BY
		07/19	REPAY WEDGE CURB	MJ
		12/20	ADD FIBER REINFORCED / NOTE 1	RRB
		12/20	DEL 'IE' EXCEPTION, NOTE 2	RRB
		06/07	ADD SLOPE STABILIZATION NOTE	EB

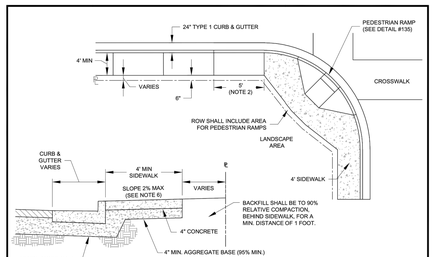

DETAIL 'A'

NOTE:
1. MIN. CURB RETURN RADIUS SHALL BE 20 FEET UNLESS OTHER SPECIFIED
   a. TRANSVERSE EXPANSION JOINTS 1/2" WIDE SHALL BE CONSTRUCTED AT ALL SIDEWALK RETURNS. OPPOSITE EXPANSION JOINTS INADJACENT CURB. ISOLATION JOINTS SHALL BE INSTALLED AROUND ALL STRUCTURES.EXPANSION & ISOLATION JOINTS SHALL BE FILED W/ JOINT FILLER STRIPS 1/2" THICK. JOINT MATERIAL SHALL CONFORM TO SEC.202.10.
2. ALL AGGREGATE BASE SHALL BE TYPE 2, CLASS B.
3. ON SIDEWALKS WIDER THAN 5, JOINTING PATTERN SHALL BE .5- 1.2 TIMES THE WIDTH OF THE SIDEWALK.
4. SEE CONCRETE WORK GENERAL NOTE 2.
5. **OBSTRUCTIONS WILL NOT BE PERMITTED WITHIN A 3' MIN. WIDTH IN ANY SIDEWALK. ANY PORTION OF SIDEWALK THAT EXCEEDS 2% MAX. CROSS-SLOPE SHALL BE REMOVED AND REPLACED. SLOPES MUST BE VERIFIED WITH A SMART LEVEL BY INSPECTOR.**

TYPICAL SIDEWALK	Detail No. 136 STREETS	DATE	REVISIONS	BY
		07/02	ADD FIBER REINFORCED / NOTE 5	RRB
		12/04	ADD 'IE'	RRB
		12/04	REMOVE 'IE' TO ROLLED CURB	RRB
			UPD PED RAMP, TEXT EDITS	
		06/07	GEN EDITS	EB

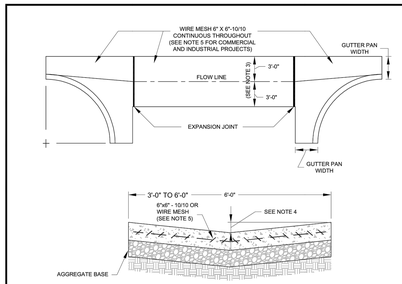

NOTES:
1. AGGREGATE BASE SHALL BE TYPE 2, CLASS B AND BE COMPACTED TO A MIN. 95% OF MAX. DENSITY.
2. PORTLAND CEMENT CONCRETE SHALL BE FIBER-REINFORCED AND MEET 4,000 PSI MIN. AT 28 DAYS, 6% ±1.5% ENTRAINED AIR. ALL MATERIAL SHALL CONFORM TO SSPWC, CURRENT EDITION.
3. GUTTER PAN WIDTH SHALL BE 3'-0" TOTAL WIDTH OR 1'-6" HALF WIDTH ON PRIVATE PROPERTY.
4. FLOW LINE VARIES TO MATCH GUTTER 1'-7".
5. CITY OF FERNLEY ENGINEER SHALL REQUIRE #4 BARS AT 12" EACH DIRECTION IN VALLEY GUTTERS WITHIN ROADWAY IN INDUSTRIAL AND COMMERCIAL PROJECTS.

P.C.C. VALLEY GUTTER	Detail No. 137 STREETS	DATE	REVISIONS	BY
		06/19	CLARIFY DIM ON NOTE 4	RRB
		12/20	ADD FIBER REINFORCED / NOTE 2	RRB
		12/04	CHG NOTE 1 TO REQUIREMENT IN COMMERCIAL AND INDUSTRIAL AREAS	RRB

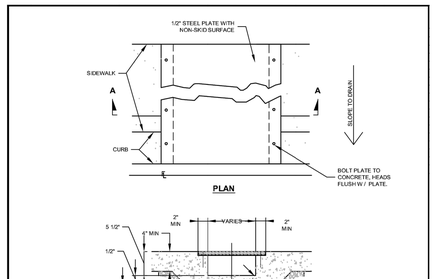

SIDEWALK CROSS-DRAIN	Detail No. 181 STORM DRAIN	DATE	REVISIONS	BY
		12/04	RENUMBER, ITEM EDITS	RRB

tsk
225 South Arlington Avenue
Reno NV, 89501
phone: 775.857.2949
fax: 775.857.2403
www.tska.com

THESE DRAWINGS AND SPECIFICATIONS ARE THE PROPERTY OF TATE SNYDER KIMSEY ARCHITECTS AND MAY NOT BE REPRODUCED OR USED FOR ANY PURPOSE WITHOUT THE ARCHITECTS WRITTEN CONSENT. AS INSTRUMENTS OF SERVICE, THESE DOCUMENTS ARE NOT FINAL AND READY FOR USE, AND THEREFORE NOT VALID, UNLESS THEY ARE SEALED, SIGNED AND DATED.
Copyright, Ltd 2023

Consultant

LUMOS & ASSOCIATES
9222 PROTOTYPE DRIVE
RENO, NV 89521
TEL: 775.827.6111
WWW.LUMOSINC.COM
INFO@LUMOSINC.COM

PLEASE RECYCLE

Project
CITY OF FERNLEY CRRC

Job No: 21-058.00

Owner
CITY OF FERNLEY

50% CONSTRUCTION DOCUMENTS

REVISIONS		
REV	DATE	DESCRIPTION

Sheet Title
CIVIL DETAILS

Date: MARCH 21, 2023
Sheet No:
C5.00

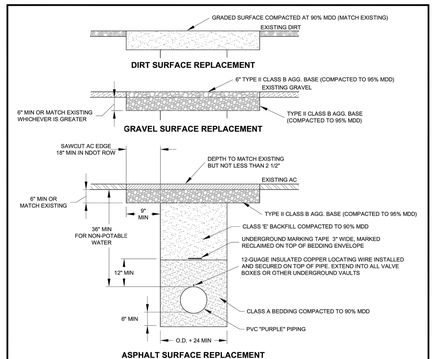

NOTES: 1. CHIP SEAL ROADS SHALL BE PATCHED WITH 2.5" AC ON 6" MIN. TYPE 2 AGG. BASE.
2. SAWCUT EXISTING AC AND TACK COAT ALL JOINTS PRIOR TO PAVING.

TYPICAL IMPROVED ROAD TRENCH SECTION

Detail No. 60 — NP WATER

DATE	REVISIONS	BY
07/07	RENUMBERED	RB

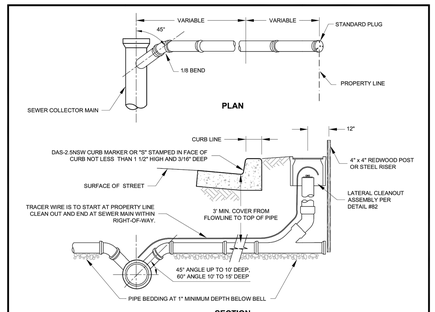

NOTES:
1. IN NO CASE SHALL A LATERAL CONNECT TO THE SEWER MAIN DIRECTLY ON TOP OF THE PIPE.
2. SEWER LATERALS SHALL HAVE A MINIMUM SLOPE OF 2%.
3. ALL JOINTS ON SEWER LATERAL PIPE SHALL BE COMPRESSION TYPE OR APPROVED SOLVENT WELD.
4. LATERAL SHALL EXTEND TO PROPERTY LINE UNLESS OTHERWISE SHOWN ON PLANS.
5. ON EXISTING INTERCEPTORS, SADDLE WYES AND SADDLE TEES SHALL BE INSTALLED AS PER MANUFACTURERS RECOMMENDATIONS.
6. ON ALL NEW INTERCEPTORS W / LATERALS, STANDARD WYES OR TEES WILL BE SLIP-GASKETED SEWER FITTINGS.
7. THERE SHALL BE 12" MINIMUM CLEARANCE WHEN SEWER LATERAL CROSSES WATER MAIN.

SEWER LATERAL CONNECTION

Detail No. 80 — SEWER

DATE	REVISIONS	BY
05/07	ADD LATERAL DETAIL	MJ
12-04	CHG PLAN & SECTION VIEWS	MJ
	TEXT EDITS	
06/07	GENERAL EDITS, ADD MIN LATERAL NOTE	EB

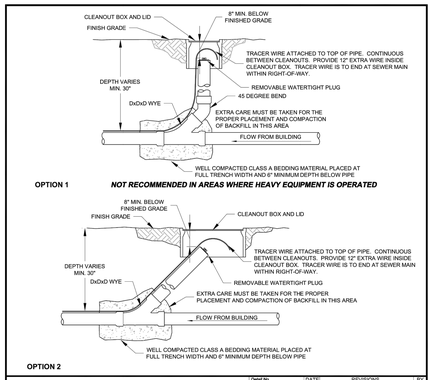

LATERAL CLEANOUT ASSEMBLY

Detail No. 82 — SEWER

DATE	REVISIONS	BY
12/03	ADD LATERAL CLEANOUT DETAIL	MJ

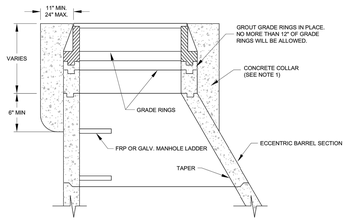

NOTES:
1. CONCRETE COLLAR SHALL BE PER WATER/SEWER GENERAL NOTE # 5.
2. HEIGHT OF COLLAR SHALL BE CONSISTENT ALL AROUND MANHOLE.
3. ALL MANHOLES SHALL INCLUDE DAL SUPPLY A-1024 FRAME AND COVER ASSEMBLY, OR EQUAL, WITH THE LETTERS ***"SANITARY SEWER"*** CLEARLY DISPLAYED ON THE COVER.
4. CONCRETE COLLAR SHALL BE FLUSH WITH ADJACENT PAVEMENT (0.00' TO 0.02').
5. CONSTRUCT AFTER PAVING IS COMPLETE.
6. CASTING AND COLLAR SHALL BE 12" TO 18" ABOVE GRADE IN UNIMPROVED AREAS.

TYPE 1A MANHOLE COLLAR & LADDER

Detail No. 86 — SEWER

DATE	REVISIONS	BY
10/04	ADD 2' GRADE RING RESTRICTION	MJ
12-04	RENUMBER DETAIL	MJ
	ADD "COLLAR" TO NOTE 1	
06/07	GEN EDITS, ADD COLLAR NOTE #7	EB

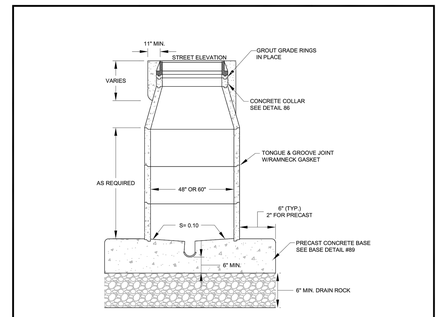

NOTES:
1. PIPES SHALL NOT PROTRUDE MORE THAN 3" INSIDE MANHOLE SECTION.
2. MANHOLES 5' DEEP OR MORE REQUIRE LADDERS (SEE DETAIL #86).
3. MANHOLES SHALL BE VACUUM TESTED PER ASTM C1244-93 OR HYDROSTATIC TESTED.
4. MANHOLES 5' OR LESS IN HEIGHT MAY BE CONCENTRIC

TYPE I STANDARD MANHOLE

Detail No. 87 — SEWER

DATE	REVISIONS	BY
12-04	ADD DETAIL	MJ

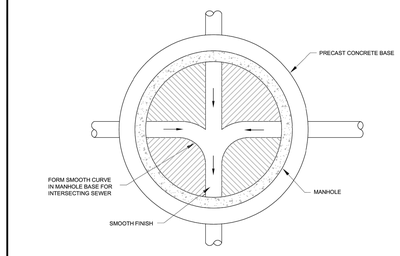

NOTES:
1. ALL MANHOLE BASE MATERIALS (DRAIN ROCK) SHALL BE COMPACTED TO 95% RELATIVE COMPACTION.
2. CAP ANY UNUSED STUB-OUTS UNLESS WAIVED BY THE UTILITY.
3. 4 WAY MANHOLES ARE TO BE INSTALLED ONLY WHERE REQUIRED.

TYPICAL BASE

Detail No. 89 — SEWER

DATE	REVISIONS	BY
10-04	RENUMBER DETAIL	MJ
	ADD "DRAIN ROCK" TO NOTE 1	

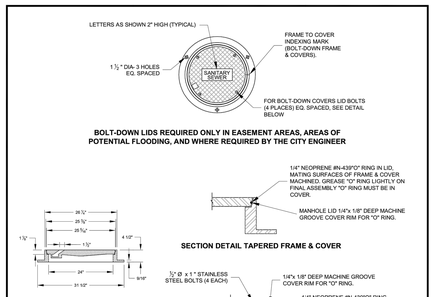

MANHOLE FRAME AND COVER

Detail No. 90 — SEWER

DATE	REVISIONS	BY
12/03	ADD MANHOLE FRAME AND COVER	MJ
12-04	RENUMBER	MJ

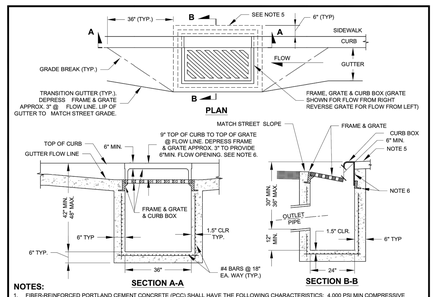

NOTES:
1. FIBER-REINFORCED PORTLAND CEMENT CONCRETE (PCC) SHALL HAVE THE FOLLOWING CHARACTERISTICS: 4,000 PSI MIN COMPRESSIVE STRENGTH AT 28 DAYS, MINIMUM 6 SACKS OF CEMENT PER CUBIC YARD WITH A MAX. WATER / CEMENT RATIO OF 0.45 AIR ENTRAINMENT 4%+1.5% SLUMP AT 1-4 INCHES. ALL MATERIALS SHALL CONFORM TO SSPWC SECTION 202.
2. REINFORCED STEEL SHALL BE GRADE 40 AND HAVE 1.5" MINIMUM CLEAR COVER.
3. CONCRETE STRUCTURE MAY BE A PRE-CAST CONCRETE UNIT UPON APPROVAL OF THE COUNTY ENGINEER. BASE OF PRE-CAST CONCRETE UNIT SHALL BE PLACED ON 6" COMPACTED DRAIN ROCK.
4. FRAME, GRATE & CURB BOX SHALL BE NEENAH R-3067 OR APPROVED EQUAL (WITH EQUAL FLOW CAPACITY AND WEIGHT.)
5. CONCRETE SHALL BE PLACED AS SHOWN WHEN NOT LOCATED IN A SIDEWALK.
6. TILT FRAME & GRATE AS REQUIRED TO ATTAIN 6" MIN FLOW OPENING & SHIM BETWEEN CURB BOX & FRAME AS REQUIRED TO MATCH CURB BOX TO TOP OFF CURB AND FACE OF CURB (SEE SECTION B-B.)
7. CATCH BASINS SHALL ONLY BE CONNECTED TO MANHOLES OR CONNECTED TO STORM DRAIN MAINS BY LATERALS.
8. INSTALL "SUR-TRAP" GREASE TRAP PER DETAIL #188.

TYPE 4R CATCH BASIN

Detail No. 180 — STORM DRAIN

DATE	REVISIONS	BY
12/04	RENUMBER, ADD NOTE 7	RRB

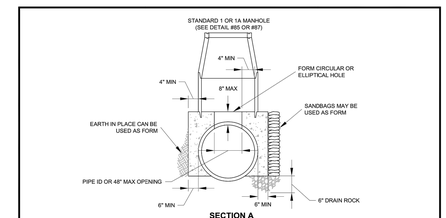

MANHOLE TYPE IV (TANGENT)

Detail No. 182 — STORM DRAIN

DATE	REVISIONS	BY
12/04	RENUMBER, ADD NOTES	RRB
06/07	GEN EDITS	EB

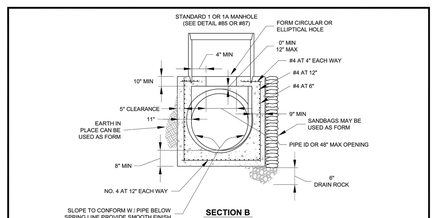

MANHOLE TYPE IV (ANGLE POINT)

Detail No. 183 — STORM DRAIN

DATE	REVISIONS	BY
12/04	RENUMBER, ADD NOTE	RRB

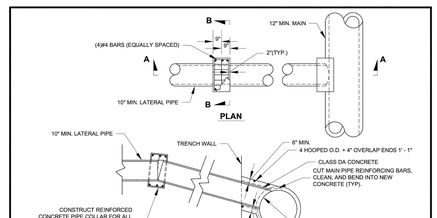

CATCH BASIN LATERAL TO RCP MAIN

Detail No. 186 — STORM DRAIN

DATE	REVISIONS	BY
12/04	ADD DETAIL	RRB
06/07	GEN EDITS	EB

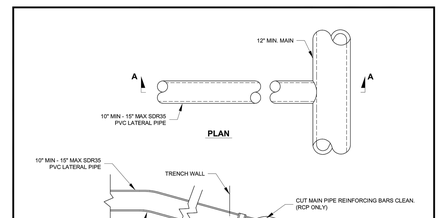

NOTE:
CONNECTION OF THE NEW SERVICE LATERAL TO THE MAINLINE SHALL BE ACCOMPLISHED BY MEANS OF A COMPRESSION-FIT SERVICE CONNECTION. THE SERVICE CONNECTION SHALL BE SPECIFICALLY DESIGNED FOR CONNECTION TO THE STORM DRAIN MAIN BEING INSTALLED, AND SHALL BE INSERTA TEE AS MANUFACTURED BY FOWLER MANUFACTURING CO., HILLSBORO, OREGON. TELEPHONE (503) 357-2110; FAX (503) 359-5417, OR APPROVED EQUAL. INSTALL USING PROCEDURES AND EQUIPMENT AS REFERENCED IN MANUFACTURER'S WRITTEN INSTALLATION INSTRUCTIONS.

CATCH BASIN PVC LATERAL TO MAIN

Detail No. 187 — STORM DRAIN

DATE	REVISIONS	BY
12/04	ADD DETAIL	RRB

tsk
225 South Arlington Avenue
Reno NV, 89501
phone: 775.857.2949
fax: 775.857.2403
www.tska.com

THESE DRAWINGS AND SPECIFICATIONS ARE THE PROPERTY OF TATE SNYDER KIMSEY ARCHITECTS AND MAY NOT BE REPRODUCED OR USED FOR ANY PURPOSE WITHOUT THE ARCHITECTS WRITTEN CONSENT. AS INSTRUMENTS OF SERVICE, THESE DOCUMENTS ARE NOT FINAL AND READY FOR USE, AND THEREFORE NOT VALID, UNLESS THEY ARE SEALED, SIGNED AND DATED.

Copyright, Ltd 2023

Consultant

LUMOS & ASSOCIATES
9222 PROTOTYPE DRIVE
RENO, NV 89521
TEL: 775.827.6111
WWW.LUMOSINC.COM
INFO@LUMOSINC.COM

PLEASE RECYCLE

Project

CITY OF FERNLEY
CRRC

Job No: 21-058.00

Owner

CITY OF FERNLEY

50% CONSTRUCTION DOCUMENTS

REVISIONS		
REV	DATE	DESCRIPTION

Sheet Title

CIVIL DETAILS

Date: MARCH 21, 2023

Sheet No:

C5.01

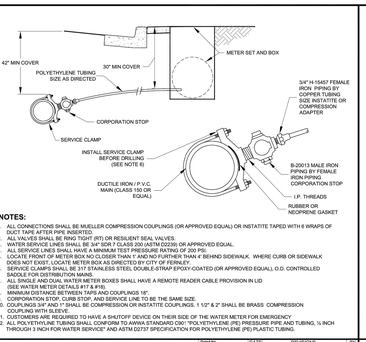

NOTES:

1. ALL CONNECTIONS SHALL BE MUELLER COMPRESSION COUPLINGS (OR APPROVED EQUAL) OR INSTATITE TAPED WITH 6 WRAPS OF GUILT TAPE AFTER PIPE INSERTED.
2. ALL VALVES SHALL BE RING TIGHT (RT) OR RESILIENT SEAL VALVES.
3. WATER SERVICE LINES SHALL BE 3/4" SDR 7 CLASS 200 (ASTM D2239) OR APPROVED EQUAL.
4. ALL SERVICE LINES SHALL HAVE A MINIMUM TEST PRESSURE RATING OF 200 PSI.
5. LOCATE FRONT OF METER BOX NO CLOSER THAN 1' AND NO FURTHER THAN 4' BEHIND SIDEWALK. WHERE CURB OR SIDEWALK DOES NOT EXIST, LOCATE METER BOX AS DIRECTED BY CITY OF FERNLEY.
6. SERVICE CLAMPS SHALL BE 316 STAINLESS STEEL DOUBLE-STRAP EPOXY-COATED (OR APPROVED EQUAL), O.D. CONTROLLED RADIUS FOR PROPER DISTRIBUTION WASHER.
7. ALL SERVICE LINES AND METER BOXES SHALL HAVE A REMOTE READER CABLE PROVISION IN LID (SEE WATER METER DETAILS #17 & #18).
8. MINIMUM DISTANCE BETWEEN TAPS AND COUPLINGS 18".
9. CORPORATION STOP, CURB STOP, AND SERVICE LINE TO BE THE SAME SIZE.
10. COUPLINGS 3/4" AND 1" SHALL BE COMPRESSION OR INSTATITE COUPLINGS. 1 1/2" & 2" SHALL BE BRASS COMPRESSION COUPLING WITH SLEEVE.
11. CUSTOMERS ARE REQUIRED TO HAVE A SHUTOFF DEVICE ON THEIR SIDE OF THE WATER METER FOR EMERGENCY
12. ALL POLYETHYLENE TUBING SHALL CONFORM TO AWWA STANDARD C901 "POLYETHYLENE (PE) PRESSURE PIPE AND TUBING, ¾ INCH THROUGH 3 INCH FOR WATER SERVICE" AND ASTM D2737 SPECIFICATION FOR POLYETHYLENE (PE) PLASTIC TUBING.

DATE	REVISIONS	BY
10/04	REMOVE CURB MARKER TEXT	MJ
06/07	ADD NOTE 12	MJ
11/07	NEW EDIT NOTE 12 ADDED	EB
03/08	TEXT EDITS	LP

WATER SERVICE CONNECTION

Detail No. 20 — WATER

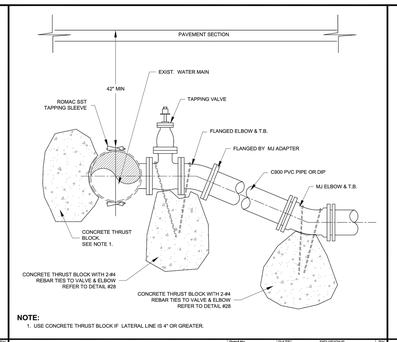

NOTE:

1. USE CONCRETE THRUST BLOCK IF LATERAL LINE IS 4" OR GREATER.

DATE	REVISIONS	BY
11/01	ADD TAPPING DETAIL	MJ
06/07	ADD THRUST BLOCK REF 1206-10	EB

TAPPING DETAIL

Detail No. 22 — WATER

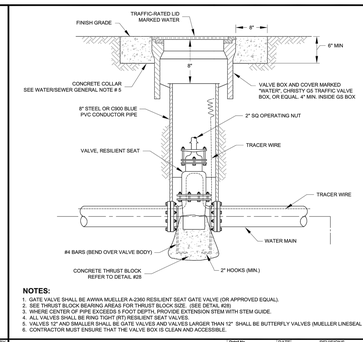

NOTES:

1. GATE VALVE SHALL BE AWWA MUELLER A-2360 RESILIENT SEAT GATE VALVE (OR APPROVED EQUAL).
2. SEE THRUST BLOCK BEARING AREAS FOR THRUST BLOCK SIZE. (SEE DETAIL #28)
3. WHERE CENTER OF PIPE EXCEEDS 5 FOOT DEPTH, PROVIDE EXTENSION STEM WITH STEM GUIDE.
4. ALL VALVES SHALL BE RING TIGHT (RT) RESILIENT SEAT VALVES.
5. VALVES 12" AND SMALLER SHALL BE GATE VALVES AND VALVES LARGER THAN 12" SHALL BE BUTTERFLY VALVES (MUELLER LINESEAL III).
6. CONTRACTOR MUST ENSURE THAT THE VALVE BOX IS CLEAN AND ACCESSIBLE.

DATE	REVISIONS	BY
10/04	TRACER WIRE ADDED	MJ
12/04	NOTE TRAFFIC RATED LID	MJ
06/07	CHG CONC TO 6", ADD TRACER WIRE	EB

VALVE & VALVE BOX

Detail No. 24 — WATER

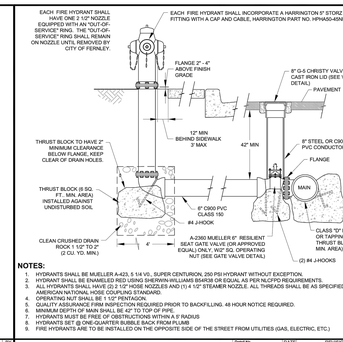

NOTES:

1. HYDRANTS SHALL BE MUELLER A-423, 5 1/4 VO., SUPER CENTURION, 250 PSI HYDRANT WITHOUT EXCEPTION.
2. HYDRANT SHALL BE ENAMELED RED USING SHERWIN-WILLIAMS B54R36 OR EQUAL AS PER NLCFPD REQUIREMENTS.
3. ALL HYDRANTS SHALL HAVE (3) 2 1/2" HOSE NOZZLES AND (1) 4 1/2" STEAMER NOZZLE. ALL THREADS SHALL BE AS SPECIFIED FOR AMERICAN NATIONAL HOSE COUPLING STANDARD.
4. OPERATING NUT SHALL BE 1 1/2" PENTAGON.
5. QUALITY ASSURANCE FIRM INSPECTION REQUIRED PRIOR TO BACKFILLING. 48 HOUR NOTICE REQUIRED.
6. MINIMUM DEPTH OF MAIN SHALL BE 42" TO TOP OF PIPE.
7. HYDRANTS MUST BE FREE OF OBSTRUCTIONS WITHIN A 3' RADIUS
8. HYDRANTS SET @ ONE-QUARTER BUBBLE BACK FROM FLOW LINE
9. FIRE HYDRANTS ARE TO BE INSTALLED ON THE OPPOSITE SIDE OF THE STREET FROM UTILITIES (GAS, ELECTRIC, ETC.)

DATE	REVISIONS	BY
06/99	FIRE HYDRANT VALVE SPACING	WRC
10/04	ADD FIRE HYDRANT FITTING	MJ
12/04	CURB MARKING EDIT	MJ
12/04	TEXT EDITS	LP
06/07	GENERAL EDITS	EB

FIRE HYDRANT

Detail No. 29 — WATER

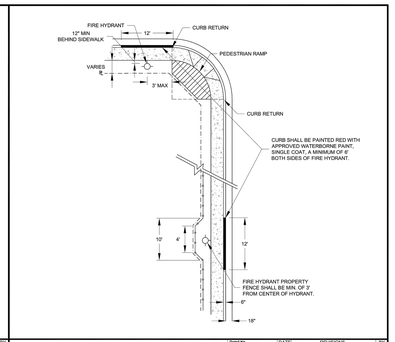

FIRE HYDRANT LOCATIONS

Detail No. 30 — WATER

DATE	REVISIONS	BY
10/04	ADD PEDESTRIAN RAMP	MJ
12/04	ADD "CURB RETURN" NOTE	MJ
06/07	ADD PAINT NOTE	EB

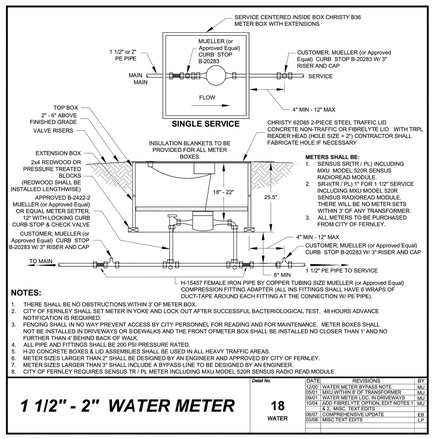

NOTES:

1. THERE SHALL BE NO OBSTRUCTIONS WITHIN 3' OF METER BOX.
2. CITY OF FERNLEY SHALL SET METER IN YOKE AND LOCK OUT AFTER SUCCESSFUL BACTERIOLOGICAL TEST. 48 HOURS ADVANCE NOTIFICATION IS REQUIRED.
3. FENCING SHALL IN NO WAY PREVENT ACCESS BY CITY PERSONNEL FOR READING AND FOR MAINTENANCE. METER BOXES SHALL NOT BE INSTALLED IN DRIVEWAYS OR SIDEWALKS AND THE FRONT OFMETER BOX SHALL BE INSTALLED NO CLOSER THAN 1' AND NO FURTHER THAN 4' BEHIND BACK OF WALK.
4. ALL PIPE AND FITTINGS SHALL BE 200 PSI PRESSURE RATED.
5. H-20 CONCRETE BOXES & LID ASSEMBLIES SHALL BE USED IN ALL HEAVY TRAFFIC AREAS.
6. METER SIZES LARGER THAN 2" SHALL BE DESIGNED BY AN ENGINEER AND APPROVED BY CITY OF FERNLEY.
7. METER SIZES LARGER THAN 2" SHALL INCLUDE A BYPASS LINE TO BE DESIGNED BY AN ENGINEER.
8. CITY OF FERNLEY REQUIRES SENSUS TR / PL METER INCLUDING MXU MODEL 520R SENSUS RADIO READ MODULE.

DATE	REVISIONS	BY
12/00	WATER METER BYPASS NOTE	MJ
06/01	ADD NOTE FOR TRANSFORMER	MJ
09/01	MOUNTH METER CU. YD. CHANGE	MJ
10/04	ADD FIBRELYTE OPTION, EDIT NOTES 1 & 3, MISC. TEXT EDITS	MJ
06/07	COMPREHENSIVE UPDATE	EB
03/08	MISC TEXT EDITS	LP

1 1/2" - 2" WATER METER

Detail No. 18 — WATER

NDS® StormChamber® Plan View (Configuration Example)

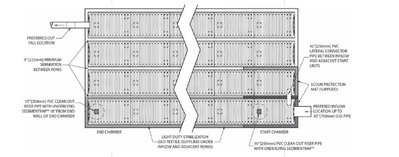

NDS® StormChamber® Elevated View

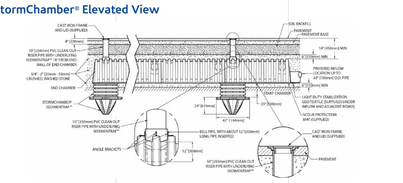

1 C5.02 — STORM WATER INFILTRATION CHAMBER

SCALE: NTS

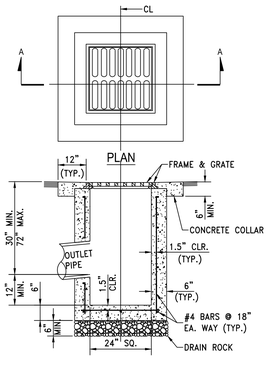

SECTION A-A

NOTES:

1. FIBER-REINFORCED PORTLAND CEMENT CONCRETE (P.C.C.) SHALL HAVE THE FOLLOWING CHARACTERISTICS: 4000 PSI MIN. COMPRESSIVE STRENGTH AT 28 DAYS, MIN. 6 SACKS OF CEMENT PER CUBIC YARD WITH MAX. WATER-CEMENT RATIO OF 0.45, AIR ENTRAINMENT 6% ±1.5%, SLUMP AT 1 TO 4 INCHES. MIX DESIGN SHALL CONFORM TO THE REQUIREMENTS OF SECTION 337 OF STANDARD SPECIFICATIONS OF PUBLIC WORKS CONSTRUCTION (SSPWC). CEMENT SHALL BE TYPE II. ALL CEMENT CONCRETE SHALL HAVE A COARSE AGGREGATE GRADATION CONFORMING TO SIZE No. 67. POLYPROPYLENE OR CELLULOSE FIBERS SHALL BE ADDED TO THE P.C.C. AT 1.5 LBS. PER CUBIC YARD. ALL MATERIALS SHALL CONFORM TO SSPWC.
2. REINFORCING STEEL SHALL BE GRADE 40 AND HAVE 1.5" CLEAR COVER.
3. CONCRETE STRUCTURE MAY BE A PRE-CAST CONCRETE UNIT. BASE OF PRE-CAST CONCRETE UNIT SHALL BE PLACED ON 6" COMPACTED DRAIN ROCK.
4. FRAME & GRATE SHALL BE D&L I-9226 OR APPROVED EQUAL.
5. CATCH BASIN SHALL BE TRAFFIC-RATED AND USED ONLY AT LOW POINTS IN ALLEYS OR PARKING AREAS.
6. ALL CATCH BASINS, PUBLIC OR PRIVATE, SHALL BE PROVIDED WITH A "SUR-TRAP" OIL/WATER SEPARATOR OR APPROVED EQUAL.

2 C5.02 — TYPE 3 CATCH BASIN

SCALE: NTS

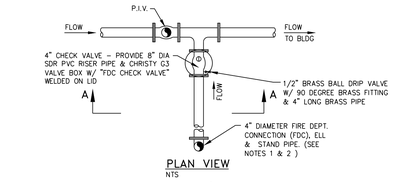

PLAN VIEW

NTS

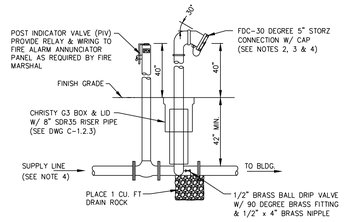

SECTION A–A

NTS

NOTES:

1. NORTH LYON COUNTY FIRE MARSHAL SHALL SPECIFY LOCATION OF FIRE DEPARTMENT CONNECTION (FDC). CLEARANCE AROUND FDC SHALL BE 3 FEET RIGHT, LEFT, REAR, AND 2D FEET IN FRONT.
2. A METAL SIGN WITH RAISED LETTERS AT LEAST 1 INCH IN SIZE SHALL BE MOUNTED ON ALL FIRE DEPARTMENT CONNECTIONS SERVICING AUTO SPRINKLERS, STANDPIPES OR FIRE PUMPS. SUCH SIGNS SHALL READ "AUTO SPRINKLER", "STANDPIPE", OR "TEST CONNECTION" AS APPLICABLE. WHERE THE FDC DOES NOT SERVE THE ENTIRE BUILDING A SIGN SHALL BE PROVIDED INDICATING THE PORTIONS OF THE BUILDING TO BE SERVED.
3. FIRE PROTECTION FACILITIES ARE OWNED AND MAINTAINED BY THE CUSTOMER.
4. ASSEMBLIES AND PIPING ON FIRE LINES SHALL BE FM/UL AND CONFORM TO THE APPLICABLE NFPA. THRUST BLOCKING AND/OR MECHANICAL RESTRAINTS SHALL BE PROVIDED AS NECESSARY.

3 C5.02 — FIRE DEPARTMENT CONNECTION (FDC)

SCALE: NTS

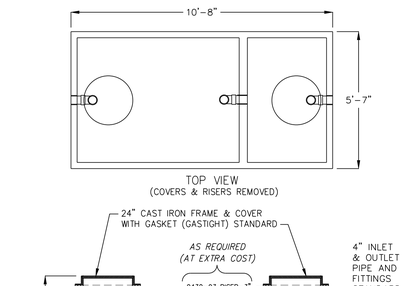

LIQUID CAPACITY: 1,500 GALLONS.

BOX DESIGN LOAD: H–20 TRAFFIC FROM 1' TO 6' OF SOIL COVER.

4 C5.02 — 1500-GAL GREASE INTERCEPTOR

SCALE: NTS

tsk

225 South Arlington Avenue
Reno NV, 89501
phone: 775.857.2949
fax: 775.857.2403
www.tska.com

THESE DRAWINGS AND SPECIFICATIONS ARE THE PROPERTY OF TATE SNYDER KIMSEY ARCHITECTS AND MAY NOT BE REPRODUCED OR USED FOR ANY PURPOSE WITHOUT THE ARCHITECTS WRITTEN CONSENT. AS INSTRUMENTS OF SERVICE, THESE DOCUMENTS ARE NOT FINAL AND READY FOR USE, AND THEREFORE NOT VALID, UNLESS THEY ARE SEALED, SIGNED AND DATED.

Copyright, Ltd 2023

Consultant

LUMOS & ASSOCIATES

9222 PROTOTYPE DRIVE
RENO, NV 89521
TEL: 775.827.6111
WWW.LUMOSINC.COM
INFO@LUMOSINC.COM

PLEASE RECYCLE

Project

CITY OF FERNLEY CRRC

Job No: 21-058.00

Owner

CITY OF FERNLEY

50% CONSTRUCTION DOCUMENTS

REVISIONS		
REV	DATE	DESCRIPTION

Sheet Title

CIVIL DETAILS

Date: MARCH 21, 2023

Sheet No:

C5.02

IRRIGATION SCHEDULE

SYMBOL	MANUFACTURER/MODEL/DESCRIPTION	PSI	
⊙	TREE BUBBLER: RAIN BIRD 1806-5 SERIES STREAM 5CST-B STREAM BUBBLER 6.0" POPUP. EACH SYMBOL REPRESENTS TWO BUBBLERS PER TREE	20	9 L3.00
SYMBOL	**MANUFACTURER/MODEL/DESCRIPTION**		
▪	DRIP CONTROL ZONE KIT: RAIN BIRD XCZ-100-LC WIDE FLOW DRIP CONTROL KIT, FOR LIGHT COMMERCIAL USES. 1IN. PEB VALVE, WITH 1IN. PRESSURE REGULATING 40PSI BASKET FILTER. 0.3-20 GPM.		7 L3.00
▭	AREA TO RECEIVE DRIP EMITTERS AREA TO RECEIVE DRIP EMITTERS: RAIN BIRD XBCVT-PC SINGLE OUTLET, PRESSURE COMPENSATING DRIP EMITTERS WITH CHECK VALVE. Emitter Notes: 10PC emitters (1 assigned to each 1 GAL plant) 10PC emitters (2 assigned to each 5 GAL plant)		11 L3.00
SYMBOL	**MANUFACTURER/MODEL/DESCRIPTION**		
◔	REMOTE CONTROL VALVE: RAINBIRD PEB-PRS-D PLASTIC INDUSTRIAL VALVES. LOW FLOW OPERATING CAPABILITY, GLOBE CONFIGURATION. WITH PRESSURE REGULATOR MODULE. SIZE PER PLANS.		6 L3.00
◪	QUICK COUPLER: RAIN BIRD 44-LRC		10 L3.00
HB	HOSE BIBB: MATCO-NORCA-203TL BRASS LOOSE KEY GARDEN VALVE HOS BIBB, FEMALE INLET, SAME SIZE AS MAINLINE PIPE. FOR USE WITH POTABLE WATER IRRIGATION SYSTEM ONLY		1 L1.00
⋈	GATE VALVE: NIBCO T-113 CLASS 125 BRONZE GATE SHUT OFF VALVE WITH WHEEL HANDLE. SAME SIZE AS MAINLINE PIPE DIAMETER AT VALVE LOCATION. SIZE RANGE - 1/4IN. - 3IN.		5 L3.00
MV	MASTER VALVE: BUCKNER-SUPERIOR 3100 1-1/2" NORMALLY OPEN BRASS MASTER VALVE, 1-1/2" SIZE, NORMALLY OPEN BRASS VALVE THAT PROVIDES DIRTY WATER PROTECTION.		1 L3.00
BP	BACKFLOW PREVENTOR: FEBCO 765 2" SIZE PER CIVIL PLANS		
C	CONTROLLER: RAIN BIRD ESP-LXD-LXMMSS-LXMMSSPED 50 STATION, 2 WIRE DECODER BASED CONTROLLER IN STAINLESS STEEL, CABINET W/ PEDESTAL.		3 L1.00
FS	FLOW SENSOR: RAIN BIRD FS-150-P		2 L3.00
M	WATER METER 2"		
———	IRRIGATION LATERAL LINE: PVC CLASS 200 SDR 21		4 L3.00
- - - - - - - -	DISTRIBUTION TUBING: 3/4" RAINBRID XBS-940 BLACK STRIPE TUBING WITH RAINBIRD MDCFCAP REMOVABLE FLUSH CAP AND 800 SERIES TWIST LOCK DISTRIBUTING TUBE FITTING 1/2 TUBING AND DRIP EMITTERS NOT SHOWN.		
▬ ▬ ▬	IRRIGATION MAINLINE: PVC SCHEDULE 40		4 L3.00
= = = = = = = =	PIPE SLEEVE: PVC SCHEDULE 40		

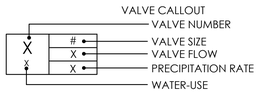

IRRIGATION NOTES

1. SPECIFICATIONS: SEE IRRIGATION SPECIFICATIONS FOR ADDITIONAL INFORMATION.
2. VERIFICATION: SYSTEM DESIGN IS BASED ON (80) P.S.I. AND (80) G.P.M. AVAILABLE AT DISCHARGE OUTLET OF METER OR OTHER POINT OF CONNECTION. CONTRACTOR SHALL VERIFY SAME AND NOTIFY LANDSCAPE ARCHITECT IF SUCH DATA ADVERSELY AFFECTS THE OPERATION OF THE SYSTEM. SUCH NOTICE SHALL BE MADE IN WRITING AND PRIOR TO COMMENCING ANY IRRIGATION WORK.
3. UTILITIES: CONTRACTOR SHALL VERIFY LOCATION OF ALL ON-SITE UTILITIES. RESTORATION OF DAMAGED UTILITIES SHALL BE MADE AT THE CONTRACTOR'S EXPENSE TO THE SATISFACTION OF THE OWNER.
4. SCHEMATIC: SYSTEM FEATURES ARE SHOWN SCHEMATICALLY FOR GRAPHIC CLARITY. INSTALL ALL PIPING AND VALVES IN COMMON TRENCHES WHERE FEASIBLE AND INSIDE PLANTING AREAS WHENEVER POSSIBLE. ALL VALVES SHALL BE LOCATED IN GROUNDCOVER OR SHRUB AREAS WHENEVER POSSIBLE.
5. CODES: IRRIGATION SYSTEM SHALL BE INSTALLED IN ACCORDANCE WITH ALL LOCAL CODES AND MANUFACTURER'S SPECIFICATIONS. NOTIFY LANDSCAPE ARCHITECT BY TELEPHONE AND IN WRITING OF ANY CONFLICTS PRIOR TO INSTALLATION.
6. SLEEVING: CONTRACTOR SHALL SIZE ALL SLEEVES TO BE A MINIMUM TWO TIMES THE SIZE OF THE INTERIOR PIPE. SLEEVES SHALL BE INSTALLED AT THE NECESSARY DEPTHS PRIOR TO PAVEMENT CONSTRUCTION. SLEEVING SHALL EXTEND 1'-0" FROM EDGE OF PAVEMENT INTO LAWN OR PLANTING AREA, AND SHALL HAVE ENDS CLEARLY MARKED ABOVE GRADE.
7. BACKFLOW DEVICES: LOCATE BACKFLOW DEVICES AS SHOWN ON PLAN. LOCATION SHALL BE APPROVED BY THE OWNER'S REPRESENTATIVE PRIOR TO INSTALLATION BY THE CONTRACTOR.
8. QUICK COUPLING VALVES: INSTALL ON TRIPLE SWING JOINT, LOCATE 12" AWAY FROM EDGE OF WALKS, WALLS, CURBS, AND HEADERBOARDS WITHIN PLANTING AREAS. PROVIDE OWNER WITH ONE OPERATING KEY, TWO SETS OF LOCKING COVER KEYS, AND ONE SWIVEL HOSE ELL.
9. HEAD ALLOWANCE: CONTRACTOR SHALL ALLOW IN BID PRICE AN AMOUNT SUFFICIENT TO PROVIDE AND INSTALL AN ADDITIONAL (5%) OF DRIPLINE AND SPRINKLER HEADS OF EACH TYPE SPECIFIED ON PLAN TO ACCOMMODATE FIELD CHANGES. THESE HEADS SHALL BE LOCATED AS DIRECTED BY THE LANDSCAPE ARCHITECT. CONTRACTOR SHALL DELIVER TO THE OWNER ANY UN-USED ADDITIONAL HEADS AND DRIPLINE AT THE END OF THE MAINTENANCE PERIOD.
10. CONTROLLER: ALL ABOVE-GRADE CONDUIT EITHER 24V. OR 110V. SHALL BE RIGID STEEL AND SECURELY FASTENED TO STRUCTURE AND TO CONTROLLER.
11. CHECK VALVES: INSTALL PLASTIC CHECK VALVE AT BASE OF HEADS ON LOW ENDS OF SYSTEMS AS REQUIRED TO MINIMIZE LINE DRAINAGE. CONTRACTOR SHALL ALLOW IN BID PRICE AN AMOUNT SUFFICIENT TO PROVIDE AND INSTALL AN ADDITIONAL (5) CHECK VALVES TO ACCOMMODATE ANY NECESSARY FIELD CHANGES.
12. PRESSURE REDUCER: TO BE PLACED UPSTREAM AND ADJACENT TO BACKFLOW DEVICE.
13. SURGE PROTECTION: 2 WIRE DECODER SYSTEM MUST BE PROPERLY GROUNDING IN ORDER TO PROTECT AGAINST LIGHTNING SURGES. THE MINIMUM DISTANCE BETWEEN THE SURGE ARRESTOR AND THE GROUND ROD SHOULD B 3'-0". PROVIDE A SPLIT BOLT CONNECTION TO BE USED TO CONNECT THE SURGE DEVICE TO THE GROUND WIRE WITH A DBR/Y WATERPROOF CONNECTOR. PROVIDE LINE SURGE PROTECTION A MINIMUM OF EVERY 500' AND/OR EVERY 8 VALVES, WHICHEVER COMES FIRST. FOR BIDDING PURPOSES, ASSUME 6 SURGE PROTECTORS/ GROUND RODS. SEE DETAIL 12/L3.00.
14. DECODERS: PROVIDE 2-WIRE DECODER ADDRESSES FOR EACH VALVE. LIMIT THE NUMBER OF DECODERS WHERE VALVES ARE GROUPED SO THAT IF THERE ARE 2 VALVES, THERE IS A 2 ADDRESS DECODER.

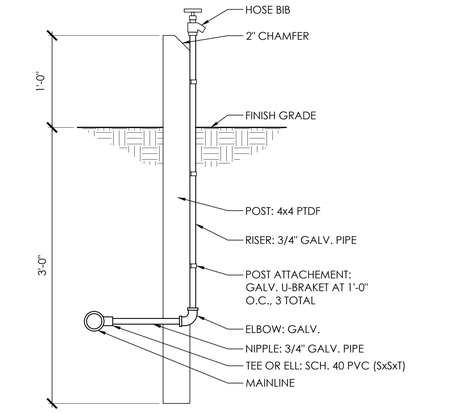

1 L1.00 HOSE BIB
1 1/2" = 1'-0" P-CLA-15-32.dwg

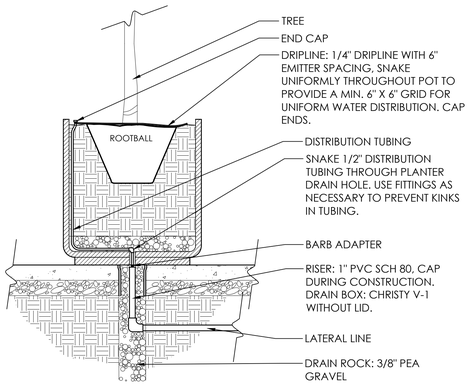

2 L1.00 POT IRRIGATION
3/4" = 1'-0" P-CLA-15-52

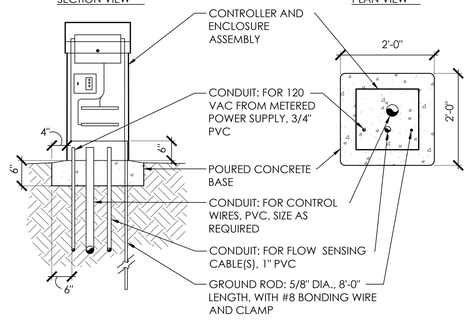

3 L1.00 CONTROLLER
3/4" = 1'-0" P-CLA-15-13.dwg

tsk
225 South Arlington Avenue
Reno NV, 89501
phone: 775.857.2949
fax: 775.857.2403
www.tska.com

THESE DRAWINGS AND SPECIFICATIONS ARE THE PROPERTY OF TATE SNYDER KIMSEY ARCHITECTS AND MAY NOT BE REPRODUCED OR USED FOR ANY PURPOSE WITHOUT THE ARCHITECTS WRITTEN CONSENT. AS INSTRUMENTS OF SERVICE, THESE DOCUMENTS ARE NOT FINAL AND READY FOR USE, AND THEREFORE NOT VALID, UNLESS THEY ARE SEALED, SIGNED AND DATED.
Copyright, Ltd 2023

Consultant

CALA
12150 Tributary Point Dr. Suite 140
Gold River , CA 95670
T 916.985.4366
www.callanderassociates.com

PLEASE RECYCLE

Project
CITY OF FERNLEY CRRC

Job No: 21-058.00

Owner
CITY OF FERNLEY

50% CONSTRUCTION DOCUMENT

REVISIONS		
REV	DATE	DESCRIPTION

Sheet Title
IRRIGATION LEGEND

Date: MARCH 21, 2023
Sheet No:
L1.00

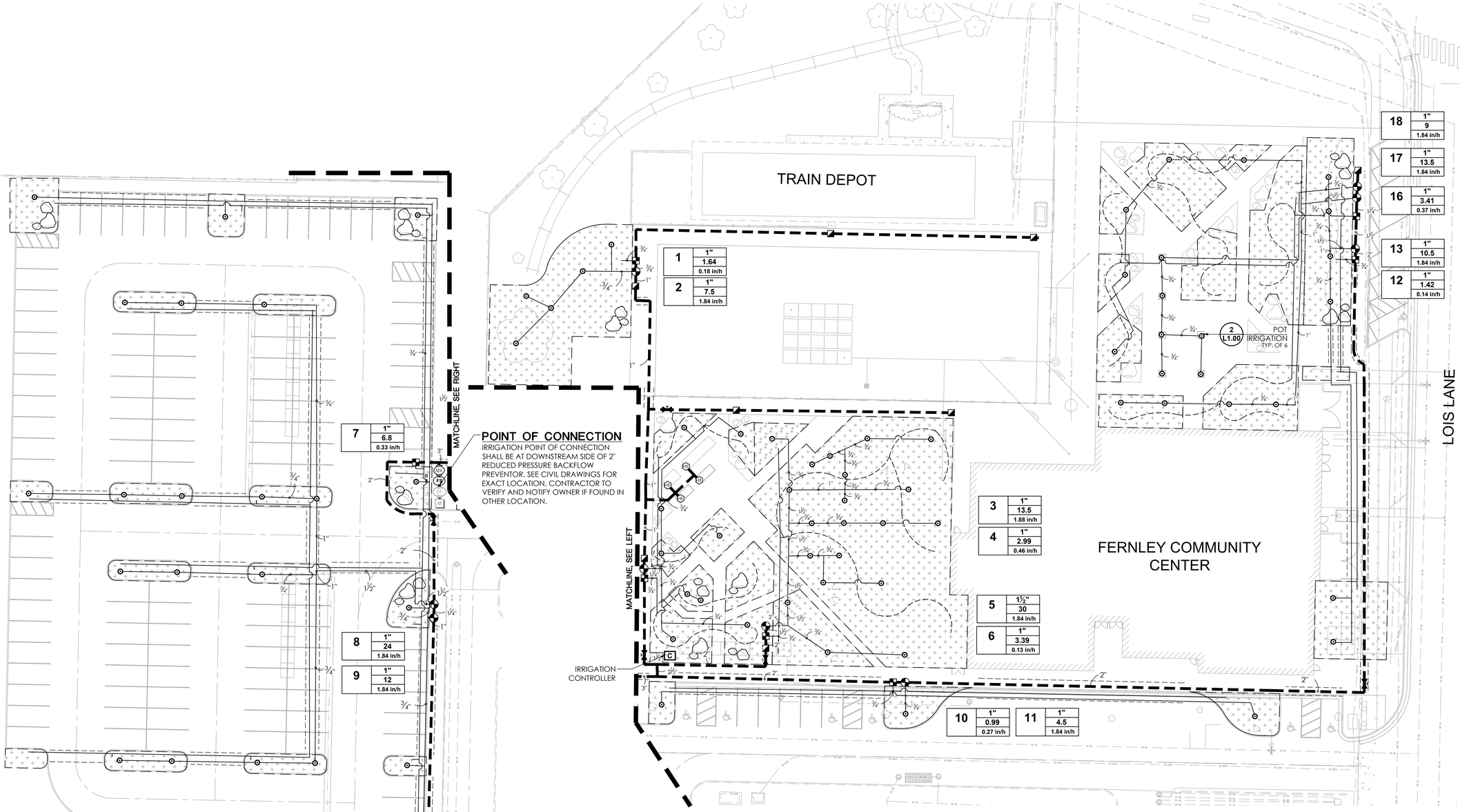

tsk
225 South Arlington Avenue
Reno NV, 89501
phone: 775.857.2949
fax: 775.857.2403
www.tska.com

THESE DRAWINGS AND SPECIFICATIONS ARE THE PROPERTY OF TATE SNYDER KIMSEY ARCHITECTS AND MAY NOT BE REPRODUCED OR USED FOR ANY PURPOSE WITHOUT THE ARCHITECTS WRITTEN CONSENT. AS INSTRUMENTS OF SERVICE, THESE DOCUMENTS ARE NOT FINAL AND READY FOR USE, AND THEREFORE NOT VALID, UNLESS THEY ARE SEALED, SIGNED AND DATED.
Copyright, Ltd 2023

Consultant

CALA
12150 Tributary Point Dr. Suite 140
Gold River , CA 95670
T 916.985.4366
www.callanderassociates.com

PLEASE RECYCLE

Project
CITY OF FERNLEY CRRC

Job No: 21-058.00

Owner
CITY OF FERNLEY

50% CONSTRUCTION DOCUMENT

REVISIONS		
REV	DATE	DESCRIPTION

Sheet Title
IRRIGAITON PLAN BASE BID

Date: MARCH 21, 2023
Sheet No:
L1.01

PLANT SCHEDULE

TREES	BOTANICAL / COMMON NAME	SIZE
ACE TRU	ACER TRUNCATUM X PLATANOIDES 'WARRENRED' / PACIFIC SUNSET® MAPLE	3" CAL
AME MKK	AMELANCHIER CANADENSIS / CANADIAN SERVICEBERRY MULTI-TRUNK	15 GAL
CAR FST	CARPINUS BETULUS 'FASTIGIATA' / PYRAMIDAL EUROPEAN HORNBEAN	3" CAL
GLE TRI	GLEDITSIA TRIACANTHOS INERMIS / THORNLESS HONEY LOCUST	3" CAL
MAL ADI	MALUS X 'ADIRONDACK' / ADIRONDACK CRABAPPLE	3" CAL
MAL PRA	MALUS X 'PRAIRIFIRE' / PRAIRIFIRE CRABAPPLE	3" CAL
PIN LIM	PINUS FLEXILIS / LIMBER PINE	8' MIN. HT.
PLA BLO	PLATANUS X ACERIFOLIA 'BLOODGOOD' / BLOODGOOD LONDON PLANE TREE	3" CAL
TIL COR	TILIA CORDATA 'GREENSPIRE' / GREENSPIRE LITTLELEAF LINDEN	3" CAL

SHRUBS	BOTANICAL / COMMON NAME	SIZE	SPACING
AGA AFR	AGAPANTHUS AFRICANUS 'PETER PAN' / PETER PAN AFRICAN LILY	1 GAL	18" o.c.
BOU GRA	BOUTELOUA GRACILIS / BLUE GRAMA GRASS	1 GAL	48" o.c.
COR SER	CORNUS SERICEA / RED TWIG DOGWOOD	5 GAL	96" o.c.
COT DAM	COTONEASTER DAMMERI 'CORAL BEAUTY' / CORAL BEAUTY COTONEASTER	5 GAL	72" o.c.
ECH PUR	ECHINACEA PURPUREA / CONEFLOWER	1 GAL	18" o.c.
FOR INT	FORSYTHIA X INTERMEDIA 'NIMBUS' / SHOW OFF® SUGAR BABY® DWARF FORSYTHIA	5 GAL	36" o.c.
HEM STE	HEMEROCALLIS X 'STELLA DE ORO' / STELLA DE ORO DAYLILY	1 GAL	18" o.c.
JUN SAB	JUNIPERUS SABINA 'CALGARY CARPET' / CALGARY CARPET JUNIPER	5 GAL	96" o.c.
NEP WLO	NEPETA X 'WALKER'S LOW' / WALKER'S LOW CATMINT	1 GAL	36" o.c.
PAN VIR	PANICUM VIRGATUM / SWITCH GRASS	1 GAL	36" o.c.
PLA GRA	PLATYCODON GRANDIFLORUS / BALLOON FLOWER	1 GAL	18" o.c.
POT FRU	POTENTILLA FRUTICOSA / BUSH CINQUEFOIL	5 GAL	60" o.c.
PRU LRU	PRUNUS LAUROCERASUS 'NANA' / NANA ENGLISH LAUREL	5 GAL	96" o.c.
SAL NEM	SALVIA NEMOROSA 'HAEUMANARC' / MARCUS® MEADOW SAGE	5 GAL	18" o.c.
SED AUT	SEDUM X 'AUTUMN JOY' / AUTUMN JOY SEDUM	5 GAL	24" o.c.
STA BYZ	STACHYS BYZANTINA / LAMB'S EAR	1 GAL	18" o.c.
THY SER	THYMUS SERPYLLUM / CREEPING THYME	1 GAL	18" o.c.
YUC COL	YUCCA FILAMENTOSA 'COLOR GUARD' / COLOR GUARD ADAM'S NEEDLE	1 GAL	36" o.c.

PLANT LEGEND

- ROOT BARRIER
- LANDSCAPE BOULDERS (3 / L2.00)
  - SMALL, 2' OR SMALLER
  - MEDIUM, 2'-4' IN SIZE
  - LARGE, 4'-5' IN SIZE
- STABILIZED DECOMPOSED GRANITE (1 / L2.00)
- UNSTABILIZED DECOMPOSED GRANITE: CRUSHED STONE FINES BUCKSKIN GOLD INSTALLED OVER LANDSCAPE FABRIC
- HDR — REDWOOD HEADER OR RAILROAD TIES (2 / L2.00)
- PLANTER BOX, PER ARCHITECTURE PLANS

PLANTING NOTES

1. MULCH: INSTALL A UNIFORM COVERING OF ROCK MULCH IN ALL PLANTING AREAS, UNLESS OTHERWISE NOTED ON PLANS. ROCK MULCH SHALL BE 3/4" SIENNA, 4" MINIMUM DEPTH INSTALLED OVER LANDSCAPE FABRIC,AVAILABLE THROUGH RENO ROCK TRANSPORT OR APPROVED EQUAL.
2. GROUNDCOVER: PROVIDE GROUNDCOVER AT INDICATED ON-CENTER SPACING THROUGHOUT ALL AREAS TO BE PLANTED. GROUNDCOVER SHALL BE PROVIDED UP TO THE WATERING BASIN OF ALL TREES AND SHRUBS.
3. QUANTITIES: THE QUANTITIES SHOWN ON THE LABELS ARE NOT TO BE CONSTRUED AS THE COMPLETE AND ACCURATE LIMITS OF THE CONTRACT. FURNISH AND INSTALL ALL PLANTS SHOWN SCHEMATICALLY ON THE DRAWINGS.
4. TOPSOIL: ALL PLANTING AREAS TO RECEIVE A SIX INCH LAYER OF NATIVE TOPSOIL PER SPECIFICATIONS.

LANDSCAPE REQUIREMENTS - BASE BID

	REQUIRED	PROVIDED
MINIMUM LANDSCAPE REQUIREMENT, 10% OF SITE	4 AC X 10% = 0.4 AC (17,424 SF)	1.3 AC (57,407 SF) TOTAL
MINIMUM TREES IN REQUIRED LANDSCAPE AREA, 1 TREE EVERY 300 SF	17,424 SF / 300 SF = 58 TREES	85 TREES TOTAL
MINIMUM NUMBER OF SHRUBS IN REQUIRED LANDSCAPE AREA, 1 SHRUB EVER 15 SF	17,424 SF / 15 SF = 1,161 SHRUBS	803 SHRUBS

PARKING LOT SHADE REQUIREMENTS - BASE BID

	TOTAL # OF PARKING STALLS	REQUIRED	PROVIDED
1 SHADE TREE FOR EACH 10 SPACES FOR LOTS OVER 125	142 PARKING STALLS	142 SPACES / 10 TREES = 14 TOTAL TREES	27 TREES

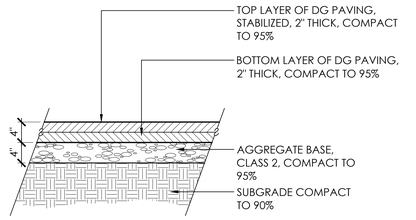

NOTE: BOTTOM LAYER OF DG PAVING SHALL BE COMPACTED BEFORE INSTALLATION OF TOP LAYER.

1 L2.00 STABILIZED DECOMPOSED GRANITE
1" = 1'-0" P-CLA-11-02

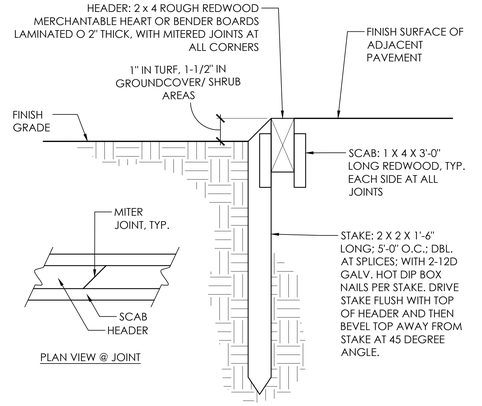

2 L2.00 REDWOOD HEADER
3" = 1'-0" P-CLA-17-03.dwg

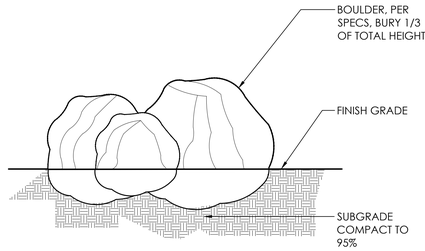

3 L2.00 LANDSCAPE BOULDERS
1/2" = 1'-0" P-CLA-06-06.dwg

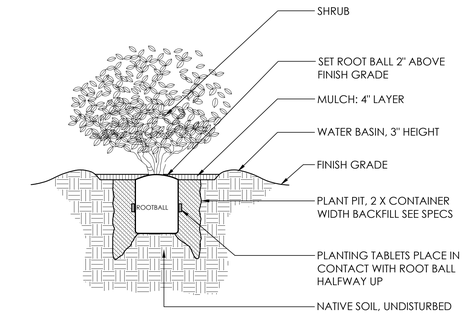

4 L2.00 SHRUB PLANTING
1/4" = 1'-0" P-CLA-16-03.dwg

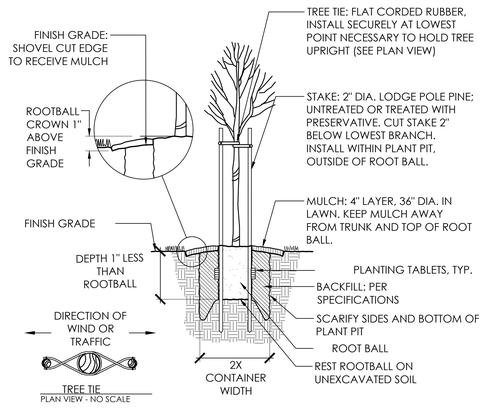

5 L2.00 TREE STAKING
3/8" = 1'-0" P-CLA-16-06.dwg

tsk
225 South Arlington Avenue
Reno NV, 89501
phone: 775.857.2949
fax: 775.857.2403
www.tska.com

THESE DRAWINGS AND SPECIFICATIONS ARE THE PROPERTY OF TATE SNYDER KIMSEY ARCHITECTS AND MAY NOT BE REPRODUCED OR USED FOR ANY PURPOSE WITHOUT THE ARCHITECTS WRITTEN CONSENT. AS INSTRUMENTS OF SERVICE, THESE DOCUMENTS ARE NOT FINAL AND READY FOR USE, AND THEREFORE NOT VALID, UNLESS THEY ARE SEALED, SIGNED AND DATED.

Copyright, Ltd 2023

Consultant

CALA
12150 Tributary Point Dr. Suite 140
Gold River , CA 95670
T 916.985.4366
www.callanderassociates.com

PLEASE RECYCLE

Project

CITY OF FERNLEY CRRC

Job No: 21-058.00

Owner

CITY OF FERNLEY

50% CONSTRUCTION DOCUMENT

REVISIONS		
REV	DATE	DESCRIPTION

Sheet Title

LANDSCAPE LEGEND, DETAILS AND NOTES

Date: MARCH 21, 2023

Sheet No:

L2.00

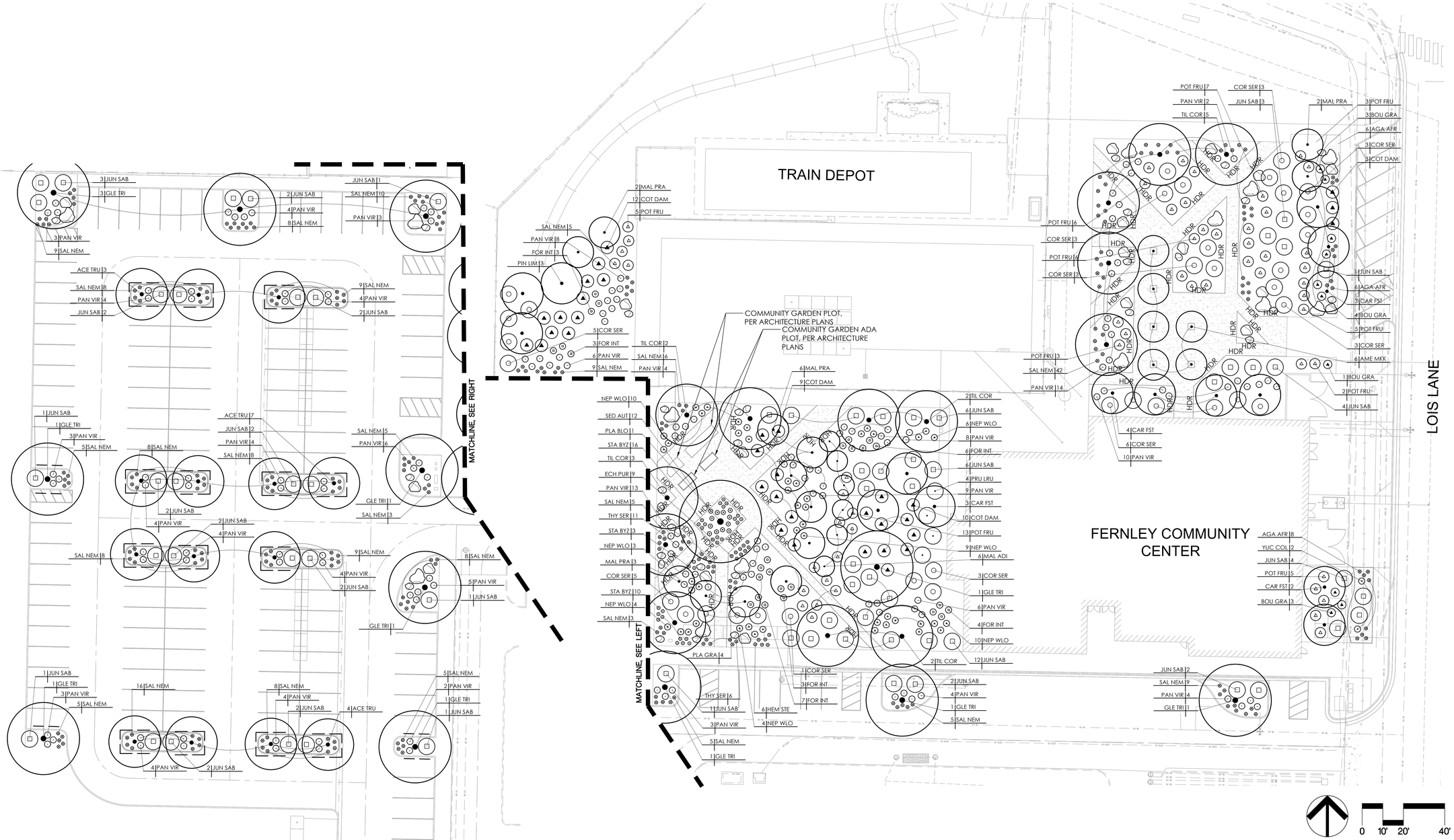

tsk
225 South Arlington Avenue
Reno NV, 89501
phone: 775.857.2949
fax: 775.857.2403
www.tska.com

THESE DRAWINGS AND SPECIFICATIONS ARE THE PROPERTY OF TATE SNYDER KIMSEY ARCHITECTS AND MAY NOT BE REPRODUCED OR USED FOR ANY PURPOSE WITHOUT THE ARCHITECTS WRITTEN CONSENT. AS INSTRUMENTS OF SERVICE, THESE DOCUMENTS ARE NOT FINAL AND READY FOR USE, AND THEREFORE NOT VALID, UNLESS THEY ARE SEALED, SIGNED AND DATED.

Copyright, Ltd 2023

Consultant

CALA
12150 Tributary Point Dr. Suite 140
Gold River , CA 95670
T 916.985.4366
www.callanderassociates.com

PLEASE RECYCLE

Project

CITY OF FERNLEY CRRC

Job No: 21-058.00

Owner

CITY OF FERNLEY

50% CONSTRUCTION DOCUMENT

REVISIONS		
REV	DATE	DESCRIPTION

Sheet Title

LANDSCAPE PLAN BASE BID

Date: MARCH 21, 2023

Sheet No:

L2.01

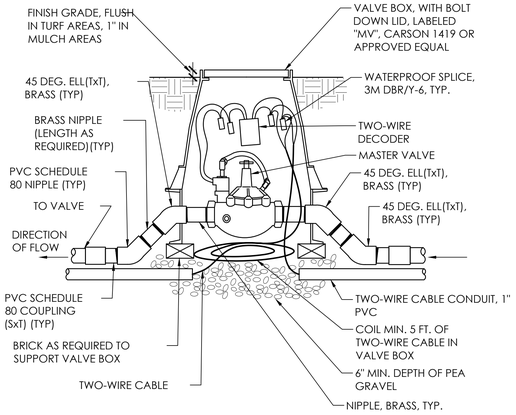

1 L3.00 **MASTER VALVE 2 WIRE**

1/4" = 1'-0" DETAIL-FILE

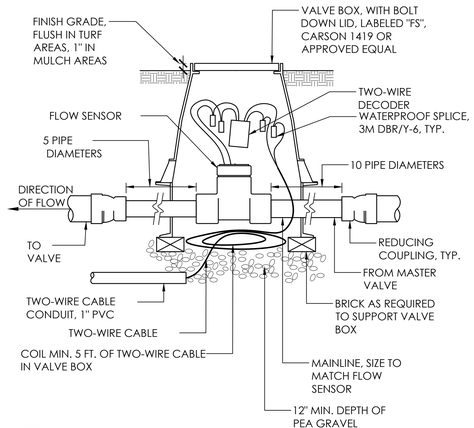

2 L3.00 **FLOW SENSOR 2 WIRE**

1/4" = 1'-0" DETAIL-FILE

NOTES:

1. CENTER VALVE BOX OVER REMOTE CONTROL VALVE TO FACILITATE SERVICING VALVE.
2. SET RCV AND VALVE BOX ASSEMBLY IN GROUNDCOVER/SHRUB AREAS.
3. SET BOXES PARALLEL TO EACH OTHER AND PERPENDICULAR TO EDGE OF ADJACENT PAVEMENT
4. AVOID HEAVILY COMPACTING SOIL AROUND VALVE BOXES TO PREVENT COLLAPSE AND DEFORMATION OF VALVE BOXES.

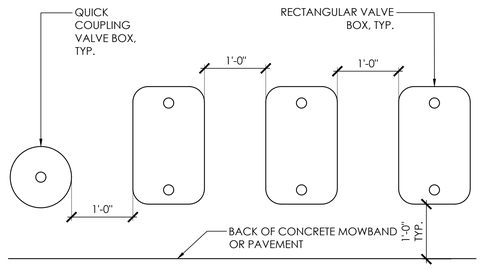

3 L3.00 **VALVE BOX LAYOUT**

1" = 1'-0" P-CLA-15-43.dwg

NOTE: TAPE AND BUNDLE WIRING AT 10'-0" INTERVALS.

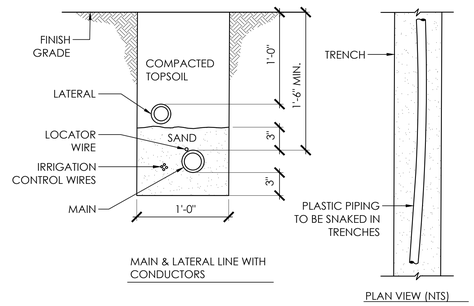

4 L3.00 **TRENCHING**

1 1/2" = 1'-0" 32840_TRENCHING_8

5 L3.00 **GATE VALVE**

1/4" = 1'-0" P-CLA-15-30.dwg

6 L3.00 **REMOTE CONTROL VALVE 2 WIRE**

3" = 1'-0" P-CLA-15-04.dwg

7 L3.00 **DRIP CONTROL ZONE KIT 2 WIRE**

1" = 1" P-CLA-15-01.dwg

8 L3.00 **DRIP TUBING LATERAL CONNECTION**

1 1/2" = 1'-0" P-CLA-15-27.dwg

9 L3.00 **DRIP POINT SOURCE EMITTER**

1 1/2" = 1'-0" P-CLA-15-26.dwg

10 L3.00 **QUICK COUPLING VALVE**

3" = 1'-0" P-CLA-15-34.dwg

11 L3.00 **DRIP EMITTER LAYOUT**

1/4" = 1'-0" P-CLA-15-50

12 L3.00 **SURGE PROTECTION**

1" = 1" P-CLA-15-53

tsk
225 South Arlington Avenue
Reno NV, 89501
phone: 775.857.2949
fax: 775.857.2403
www.tska.com

THESE DRAWINGS AND SPECIFICATIONS ARE THE PROPERTY OF TATE SNYDER KIMSEY ARCHITECTS AND MAY NOT BE REPRODUCED OR USED FOR ANY PURPOSE WITHOUT THE ARCHITECTS WRITTEN CONSENT. AS INSTRUMENTS OF SERVICE, THESE DOCUMENTS ARE NOT FINAL AND READY FOR USE, AND THEREFORE NOT VALID, UNLESS THEY ARE SEALED, SIGNED AND DATED.

Copyright, Ltd 2023

Consultant

CALA
12150 Tributary Point Dr. Suite 140
Gold River , CA 95670
T 916.985.4366
www.callanderassociates.com

PLEASE RECYCLE

Project

CITY OF FERNLEY CRRC

Job No: 21-058.00

Owner

CITY OF FERNLEY

50% CONSTRUCTION DOCUMENT

REVISIONS

REV	DATE	DESCRIPTION

Sheet Title

LANDSCAPE DETAILS

Date: MARCH 21, 2023

Sheet No:

L3.00

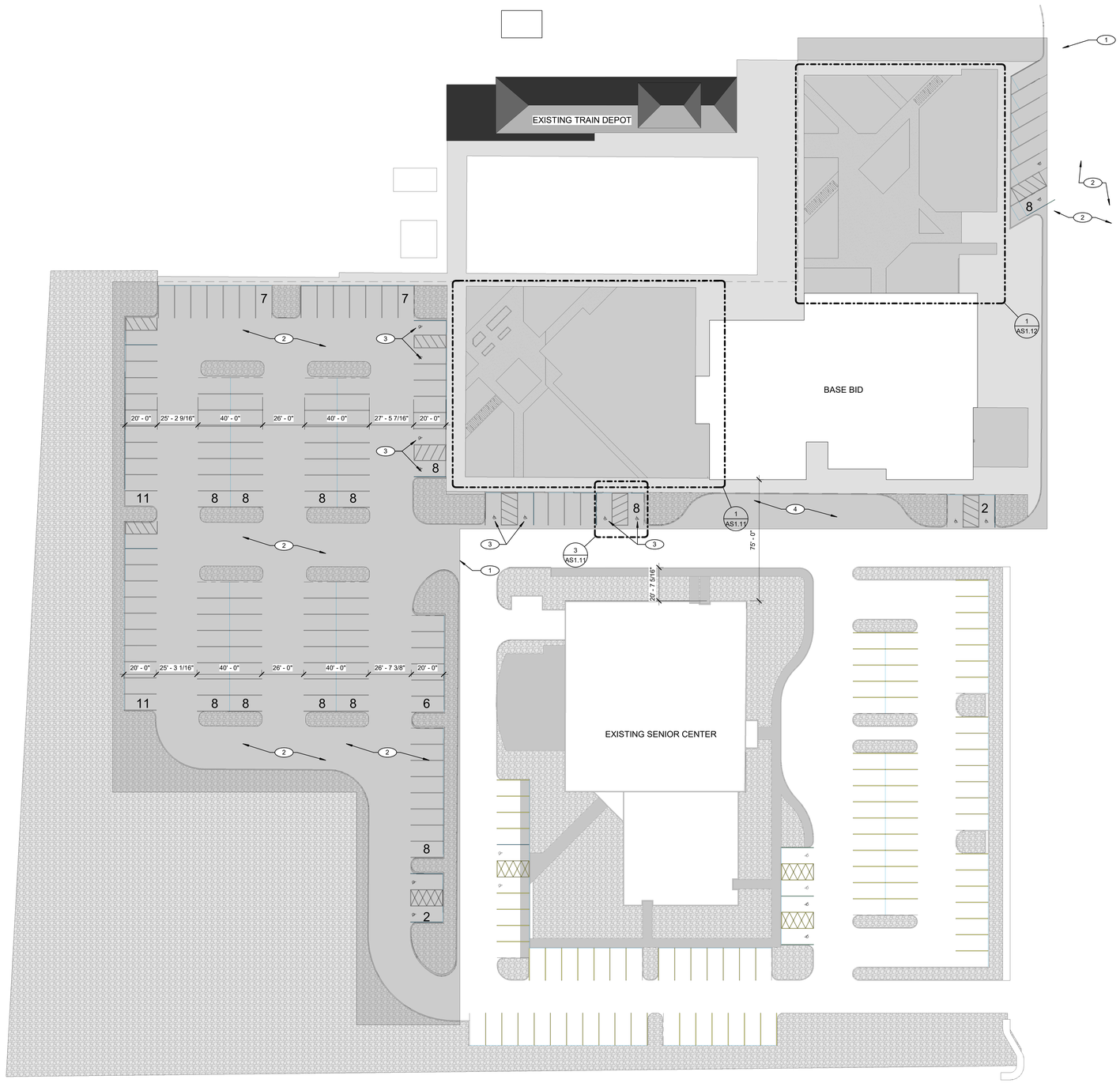

PARKING COUNTS:
ADA STALLS = 12
PARKING STALLS = 108
TOTAL PARKING = 120

1 OVERALL SITE PLAN - BASE BID
SCALE: 1" = 30'-0"

NORTH 0' 30' 60' 120'

GENERAL NOTES

1. CONTRACTOR TO VERIFY DIMENSIONS IN FIELD PRIOR TO THE COMMENCEMENT OF ANY SITE WORK. DO NOT SCALE DRAWINGS.
2. REFER TO LANDSCAPE DRAWINGS FOR LANDSCAPE INFORMATION.
3. REFER TO CIVIL DRAWINGS FOR CURB DIMENSIONS.
4. REFER TO ARCHITECTURAL DRAWINGS FOR PARKING DIMENSIONS, AND STREET DIMENSIONS.
5. SEE ENLARGED SITE PLANS FOR ALL SITE PLAN KEYNOES.

KEYNOTES

1. LIMITS OF WORK
2. <varies>
3. ADA PARKING, SEE SITE & CIVIL DWGS.
4. DROP OFF LANE, SEE SITE & CIVIL DWGS.

LEGEND

tsk
225 South Arlington Avenue
Reno NV, 89501
phone: 775.857.2949
fax: 775.857.2403
www.tska.com

THESE DRAWINGS AND SPECIFICATIONS ARE THE PROPERTY OF TATE SNYDER KIMSEY ARCHITECTS AND MAY NOT BE REPRODUCED OR USED FOR ANY PURPOSE WITHOUT THE ARCHITECTS WRITTEN CONSENT. AS INSTRUMENTS OF SERVICE, THESE DOCUMENTS ARE NOT FINAL AND READY FOR USE, AND THEREFORE NOT VALID, UNLESS THEY ARE SEALED, SIGNED AND DATED.
Copyright, Ltd 2023

Consultant

PLEASE RECYCLE

Project
CITY OF FERNLEY CRRC

Job No: 21-058.00

Owner
CITY OF FERNLEY

50 % CONSTRUCTION DOCUMENTS

REVISIONS		
REV	DATE	DESCRIPTION

Sheet Title
SITE PLAN - BASE BID

Date: MARCH 21, 2023
Sheet No:
AS1.01

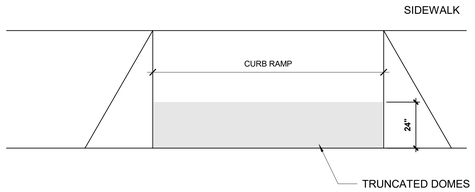

4 CURB RAMP
SCALE: 3/8" = 1'-0"

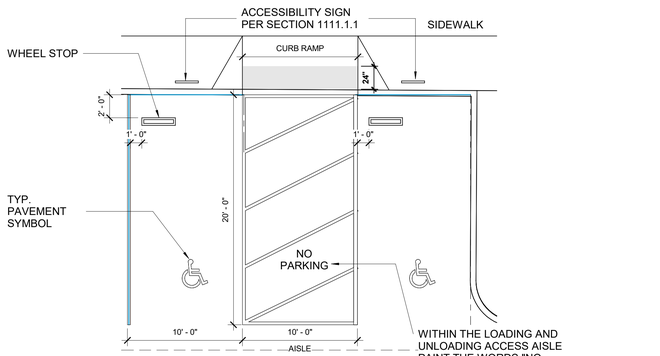

3 ADA PARKING DETAIL
SCALE: 3/16" = 1'-0"

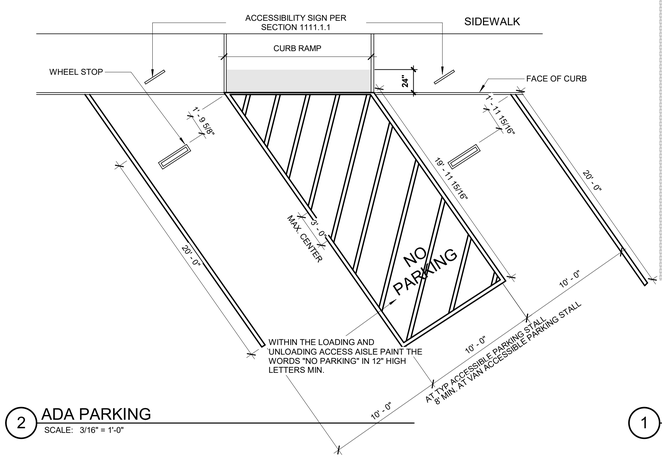

2 ADA PARKING
SCALE: 3/16" = 1'-0"

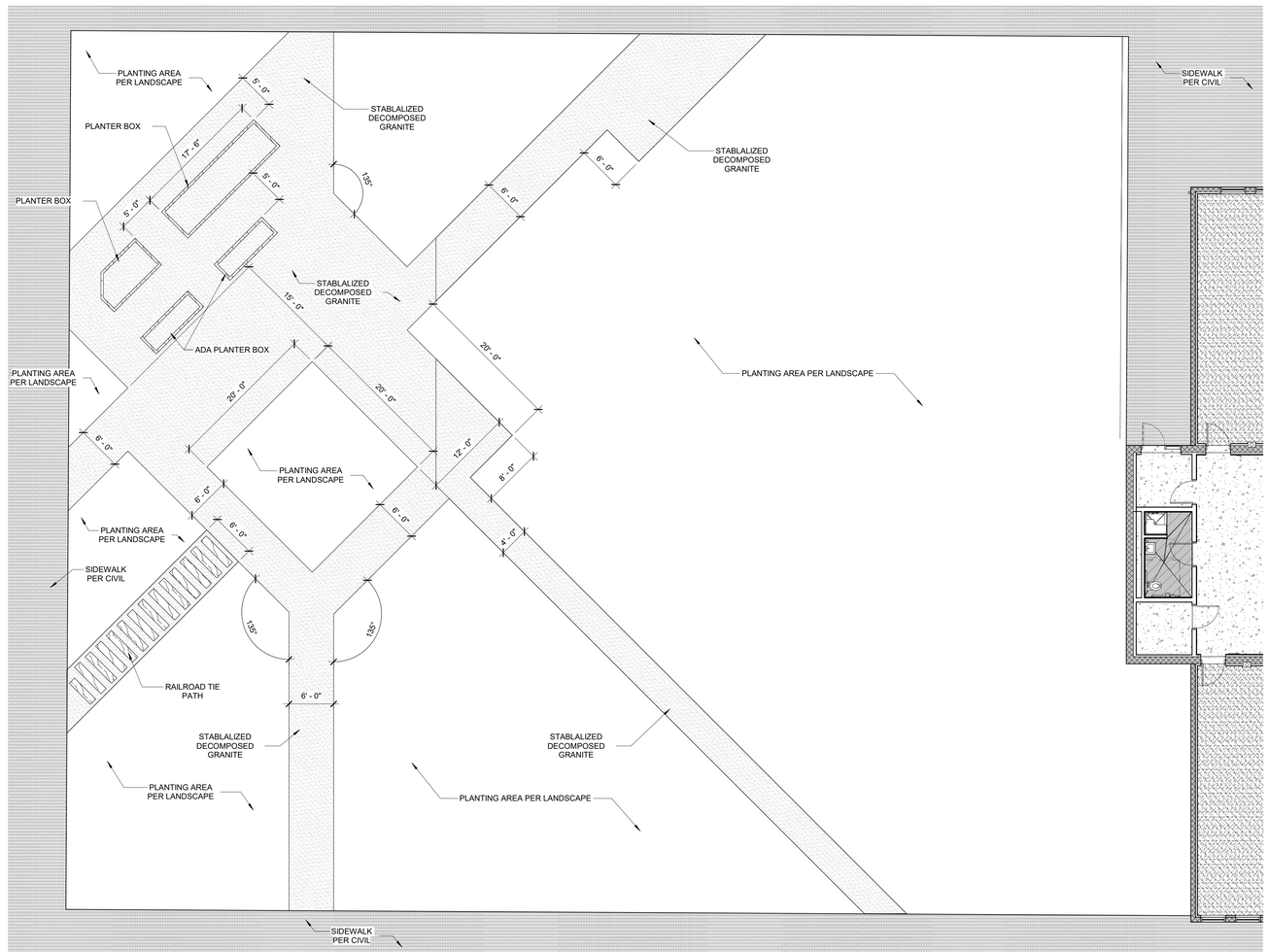

1 ENLARGED SITE PLAN - BASE BID
SCALE: 1/8" = 1'-0"

GENERAL NOTES

1. CONTRACTOR TO VERIFY DIMENSIONS IN FIELD PRIOR TO THE COMMENCEMENT OF ANY SITE WORK. DO NOT SCALE DRAWINGS.
2. REFER TO LANDSCAPE DRAWINGS FOR LANDSCAPE INFORMATION.
3. REFER TO CIVIL DRAWINGS FOR CURB DIMENSIONS.
4. REFER TO ARCHITECTURAL DRAWINGS FOR PARKING DIMENSIONS, AND STREET DIMENSIONS.
5. SEE ENLARGED SITE PLANS FOR ALL SITE PLAN KEYNOES.

KEYNOTES

LEGEND

tsk
225 South Arlington Avenue
Reno NV, 89501
phone: 775.857.2949
fax: 775.857.2403
www.tska.com

THESE DRAWINGS AND SPECIFICATIONS ARE THE PROPERTY OF TATE SNYDER KIMSEY ARCHITECTS AND MAY NOT BE REPRODUCED OR USED FOR ANY PURPOSE WITHOUT THE ARCHITECTS WRITTEN CONSENT. AS INSTRUMENTS OF SERVICE, THESE DOCUMENTS ARE NOT FINAL AND READY FOR USE, AND THEREFORE NOT VALID, UNLESS THEY ARE SEALED, SIGNED AND DATED.
Copyright, Ltd 2023

Consultant

PLEASE RECYCLE

Project
CITY OF FERNLEY CRRC

Job No: 21-058.00

Owner
CITY OF FERNLEY

50 % CONSTRUCTION DOCUMENTS

REVISIONS		
REV	DATE	DESCRIPTION

Sheet Title
ENLARGED SITE PLANS AND DETAILS

Date: MARCH 21, 2023
Sheet No:
AS1.11

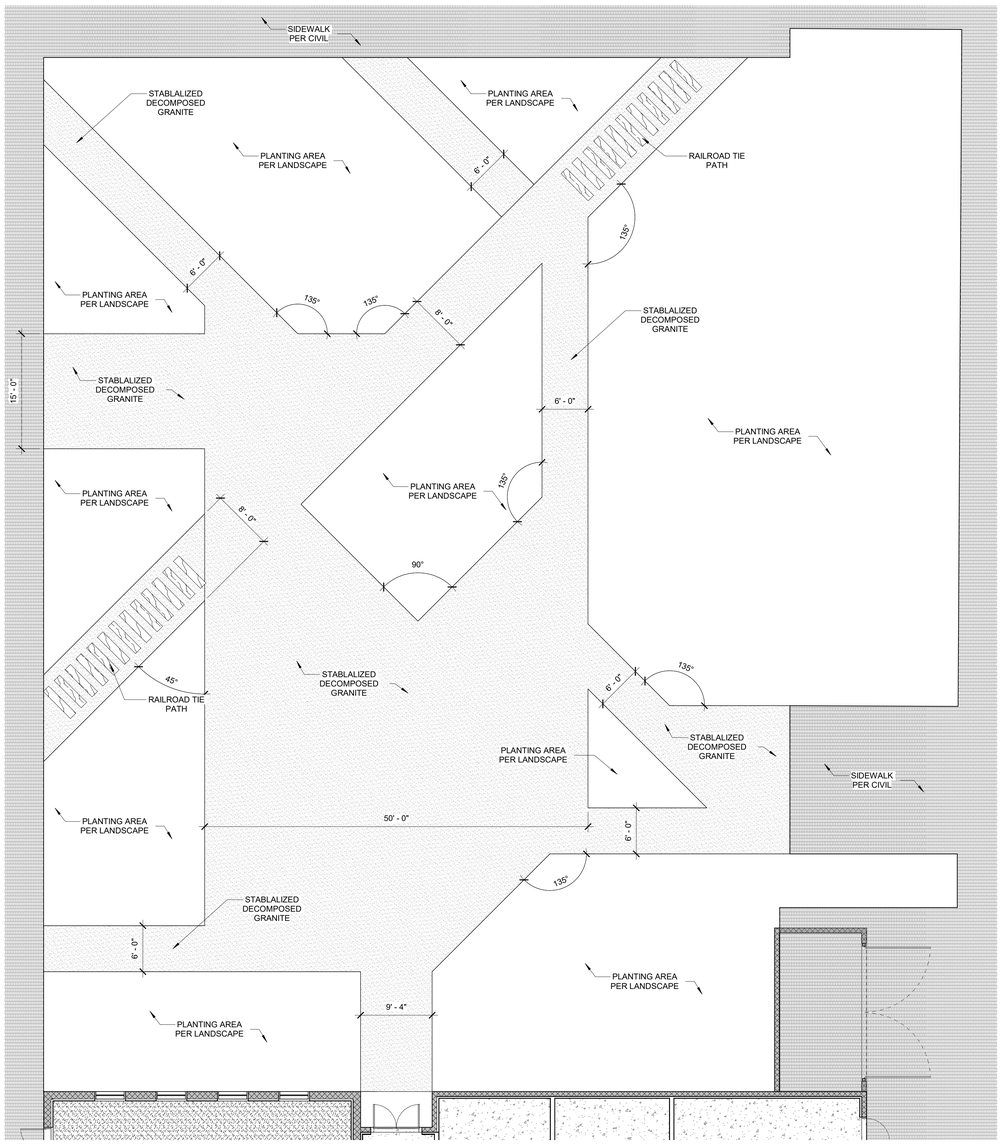

1 OVERALL SITE PLAN - BASE BID - Callout 1
SCALE: 1/8" = 1'-0"

tsk
225 South Arlington Avenue
Reno NV, 89501
phone: 775.857.2949
fax: 775.857.2403
www.tska.com

THESE DRAWINGS AND SPECIFICATIONS ARE THE PROPERTY OF TATE SNYDER KIMSEY ARCHITECTS AND MAY NOT BE REPRODUCED OR USED FOR ANY PURPOSE WITHOUT THE ARCHITECTS WRITTEN CONSENT. AS INSTRUMENTS OF SERVICE, THESE DOCUMENTS ARE NOT FINAL AND READY FOR USE, AND THEREFORE NOT VALID, UNLESS THEY ARE SEALED, SIGNED AND DATED.

Copyright, Ltd 2023

Consultant

PLEASE RECYCLE

Project
CITY OF FERNLEY CRRC

Job No: 21-058.00

Owner
CITY OF FERNLEY

50 % CONSTRUCTION DOCUMENTS

REVISIONS		
REV	DATE	DESCRIPTION

Sheet Title
ENLARGED SITE PLANS AND DETAILS

Date: MARCH 21, 2023

Sheet No:
AS1.12

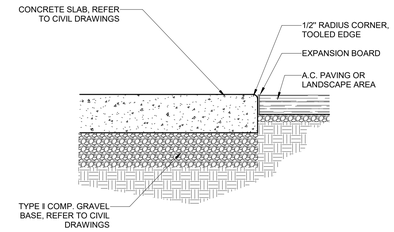

3 EDGE OF SLAB/CONC. APRON
SCALE: 1 1/2" = 1'-0"

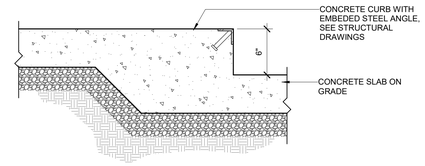

2 CONC. CURB @ TRASH ENCLOSURE
SCALE: 1 1/2" = 1'-0"

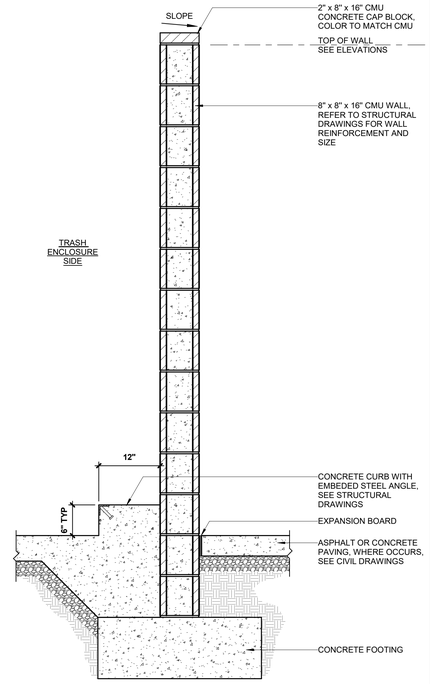

1 TRASH ENCLOSURE WALL DETAIL
SCALE: 1" = 1'-0"

tsk
225 South Arlington Avenue
Reno NV, 89501
phone: 775.857.2949
fax: 775.857.2403
www.tska.com

THESE DRAWINGS AND SPECIFICATIONS ARE THE PROPERTY OF TATE SNYDER KIMSEY ARCHITECTS AND MAY NOT BE REPRODUCED OR USED FOR ANY PURPOSE WITHOUT THE ARCHITECTS WRITTEN CONSENT. AS INSTRUMENTS OF SERVICE, THESE DOCUMENTS ARE NOT FINAL AND READY FOR USE, AND THEREFORE NOT VALID, UNLESS THEY ARE SEALED, SIGNED AND DATED.

Copyright, Ltd 2023

Consultant

PLEASE RECYCLE

Project
CITY OF FERNLEY CRRC

Job No: 21-058.00

Owner
CITY OF FERNLEY

50 % CONSTRUCTION DOCUMENTS

REVISIONS		
REV	DATE	DESCRIPTION

Sheet Title
SITE DETAILS

Date: MARCH 21, 2023

Sheet No:
AS2.01

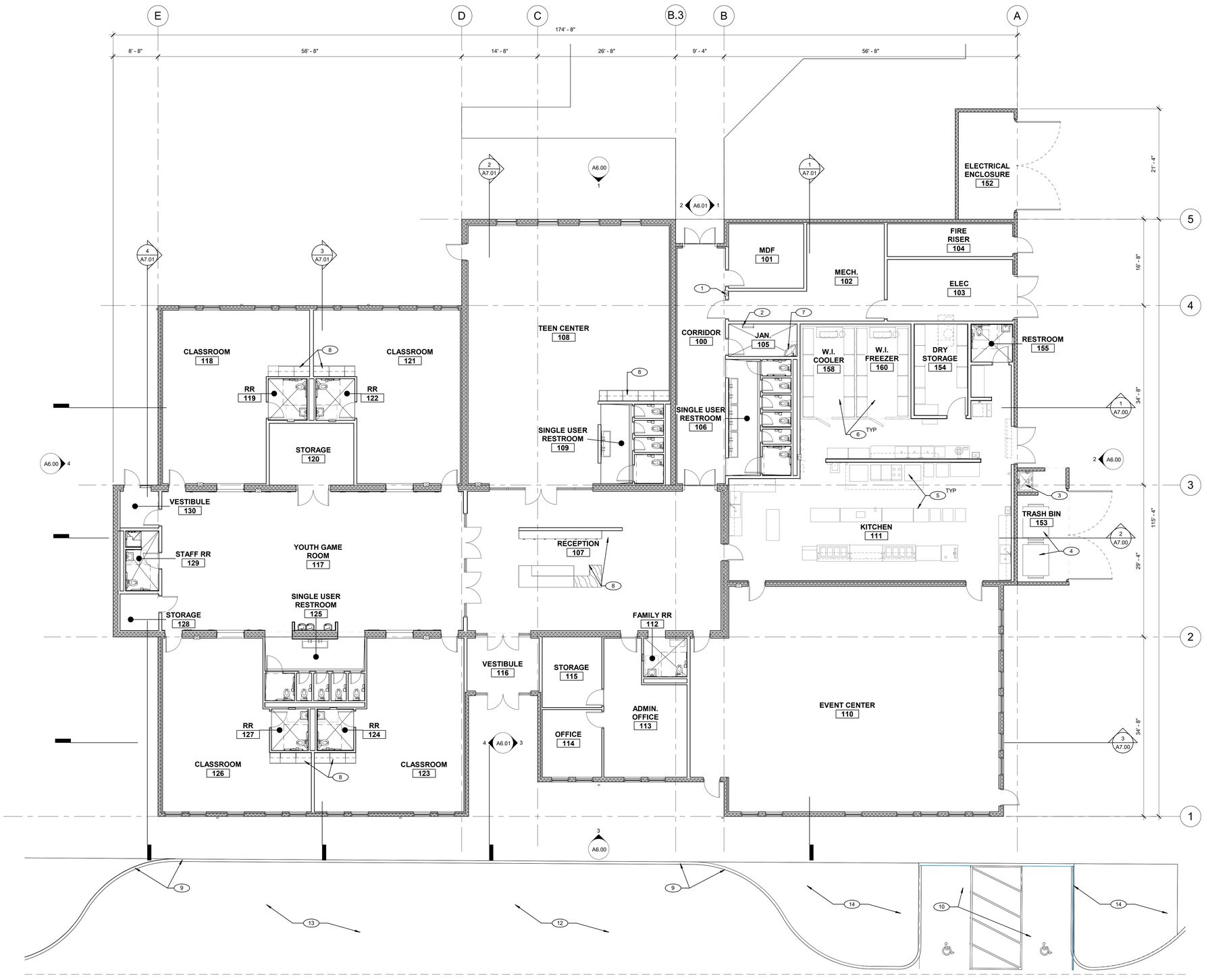

1 FLOOR PLAN - BASE BID
SCALE: 1/8" = 1'-0"

NORTH 0' 4' 8' 16'

GENERAL NOTES

1. ALL DIMENSION ARE TAKEN FROM FACE OF STUD, MASONRY, OR CONCRETE U.N.O.
2. SEE STRUCTURAL, MECHANICAL, PLUMBING, AND ELECTRICAL DRAWINGS FOR ADDITIONAL WORK NOT SHOWN ON THIS DRAWING.
3. SEE ELECTRICAL DRAWINGS FOR INFORMATION ON ELECTRICAL/TELECOM ROOMS.
4. ALL EQUIPMENT (O.F.O.I AND C.F.C.I.), SHALL COMPLY WITH ACCESSIBILITY REQUIREMENTS.

KEYNOTES

1. FIRE EXTINGUISHER
2. ROOF ACCESS LADDER, SEE ROOF DETAILS
3. TRASH CAN WASH STATION, SEE KITCHEN DWGS.
4. TRASH BIN BY OWNER.
5. KITCHEN EQUIPMENT & LAYOUT, SEE KITCHEN DWGS.
6. WALKING IN COOLER/FREEZER, SEE KITCHEN DWGS.
7. CORNER MOP SINK, SEE KITCHEN DWGS.
8. CASEWORK AND COUNTERTOP, SEE CASEWORK DETAILS.
9. CONCRETE CURB & SIDEWALK, SEE SITE & CIVIL DWGS.
10. ADA PARKING, SEE SITE & CIVIL DWGS.
12. DROP OFF LANE, SEE SITE & CIVIL DWGS.
13. ASPHALT PAVING, SEE SITE & CIVIL DWGS
14. LANDSCAPING, SEE SITE & LANDSCAPE DWGS

tsk
225 South Arlington Avenue
Reno NV, 89501
phone: 775.857.2949
fax: 775.857.2403
www.tska.com

THESE DRAWINGS AND SPECIFICATIONS ARE THE PROPERTY OF TATE SNYDER KIMSEY ARCHITECTS AND MAY NOT BE REPRODUCED OR USED FOR ANY PURPOSE WITHOUT THE ARCHITECTS WRITTEN CONSENT. AS INSTRUMENTS OF SERVICE, THESE DOCUMENTS ARE NOT FINAL AND READY FOR USE, AND THEREFORE NOT VALID, UNLESS THEY ARE SEALED, SIGNED AND DATED.

Copyright, Ltd 2023

Consultant

PLEASE RECYCLE

Project
CITY OF FERNLEY CRRC

Job No: 21-058.00

Owner
CITY OF FERNLEY

50 % CONSTRUCTION DOCUMENTS

REVISIONS

REV	DATE	DESCRIPTION

Sheet Title
OVERALL FLOOR PLAN - BASE BID

Date: MARCH 21, 2023
Sheet No:
A1.01

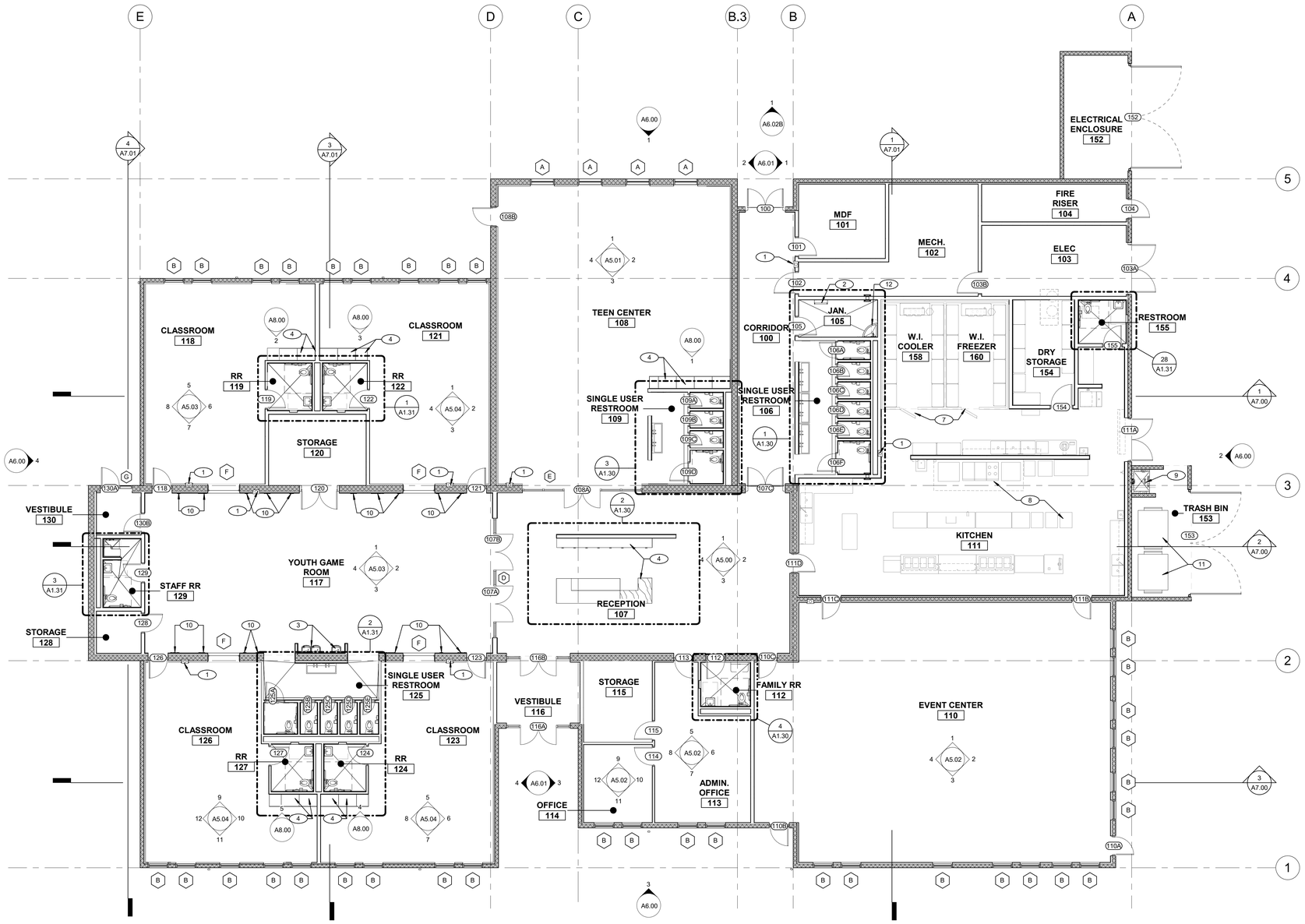

1 ENLARGED FLOOR PLAN - BASE BID
SCALE: 1/8" = 1'-0"

NORTH 0' 4' 8' 16'

GENERAL NOTES

1. ALL DIMENSION ARE TAKEN FROM FACE OF STUD, MASONRY, OR CONCRETE U.N.O.
2. SEE STRUCTURAL, MECHANICAL, PLUMBING, AND ELECTRICAL DRAWINGS FOR ADDITIONAL WORK NOT SHOWN ON THIS DRAWING.
3. SEE ELECTRICAL DRAWINGS FOR INFORMATION ON ELECTRICAL/TELECOM ROOMS.
4. ALL EQUIPMENT (O.F.O.I AND C.F.C.I.), SHALL COMPLY WITH ACCESSIBILITY REQUIREMENTS.

KEYNOTES

1. FIRE EXTINGUISHER
2. ROOF ACCESS LADDER, SEE ROOF DETAILS
3. ADA DRINKING FOUNTAIN AND WATER BOTTLE FILLER.
4. CASEWORK AND COUNTERTOP, SEE CASEWORK DETAILS.
5. TWO STATION LAVATORY
6. CAR SEAT STORAGE RACK.
7. WALKING IN COOLER/FREEZER, SEE KITCHEN DWGS.
8. KITCHEN EQUIPMENT & LAYOUT, SEE KITCHEN DWGS.
9. TRASH CAN WASH STATION, SEE KITCHEN DWGS.
10. BIRCH PLYWOOD CUT OUTS TO BE APPLIED ON THE WALL. SEE ELEVATION FOR MORE INFORMATION.
11. TRASH BIN BY OWNER.
12. CORNER MOP SINK, SEE KITCHEN DWGS.
13. PAINTED STEEL COLUMN, SEE STRUCTURAL DWGS.
14. EXPANSION JOINT, SEE DETAIL XX/AX.XX

tsk
225 South Arlington Avenue
Reno NV, 89501
phone: 775.857.2949
fax: 775.857.2403
www.tska.com

THESE DRAWINGS AND SPECIFICATIONS ARE THE PROPERTY OF TATE SNYDER KIMSEY ARCHITECTS AND MAY NOT BE REPRODUCED OR USED FOR ANY PURPOSE WITHOUT THE ARCHITECTS WRITTEN CONSENT. AS INSTRUMENTS OF SERVICE, THESE DOCUMENTS ARE NOT FINAL AND READY FOR USE, AND THEREFORE NOT VALID, UNLESS THEY ARE SEALED, SIGNED AND DATED.
Copyright, Ltd 2023

Consultant

PLEASE RECYCLE

Project
CITY OF FERNLEY CRRC

Job No: 21-058.00

Owner
CITY OF FERNLEY

50 % CONSTRUCTION DOCUMENTS

REVISIONS		
REV	DATE	DESCRIPTION

Sheet Title
ENLARGED FLOOR PLAN - BASE BID

Date: MARCH 21, 2023
Sheet No:
A1.11

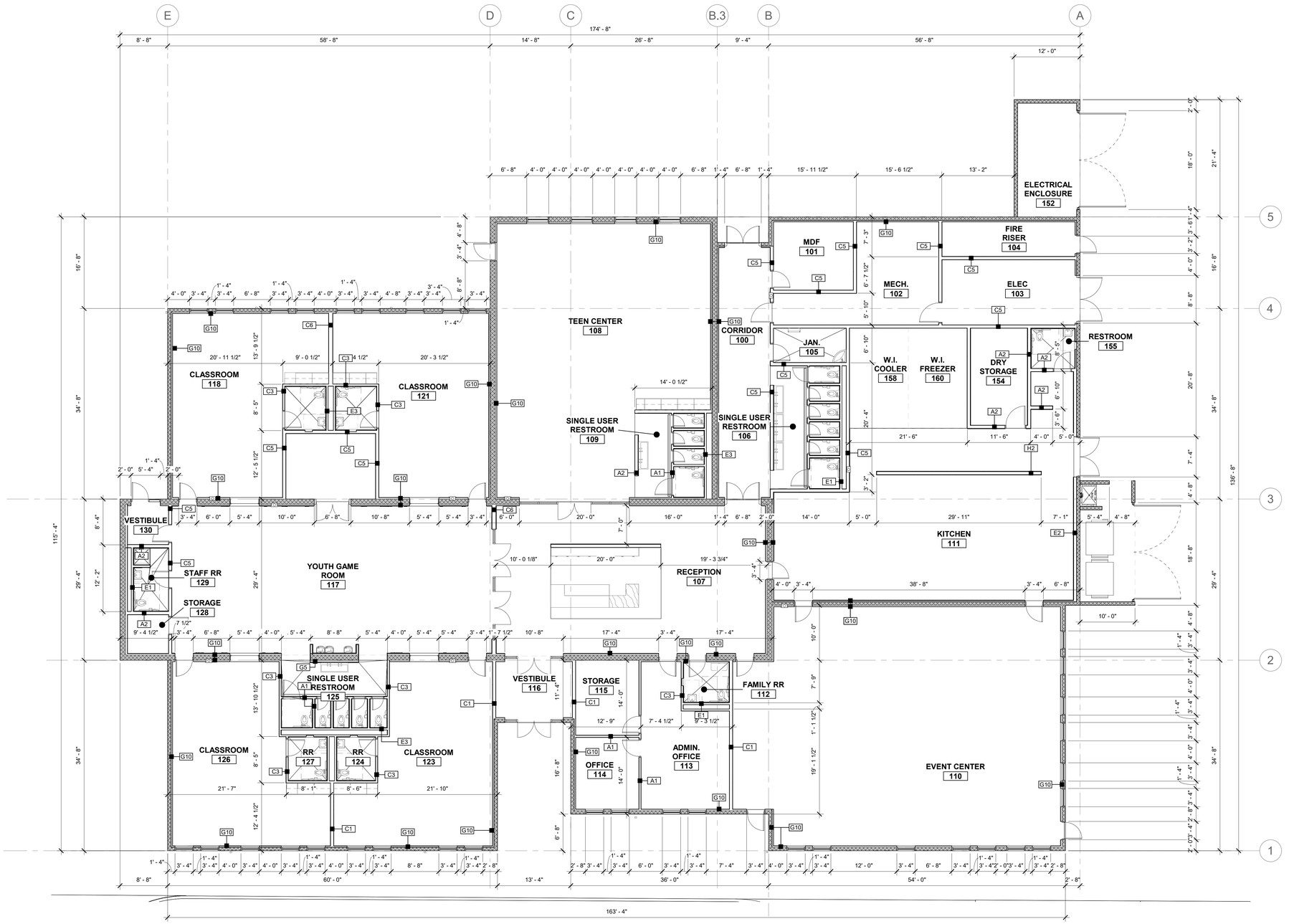

1 DIMENSION PLAN - BASE BID
SCALE: 1/8" = 1'-0"

NORTH 0' 4' 8' 16'

GENERAL NOTES

1. ALL DIMENSION ARE TAKEN FROM FACE OF STUD, MASONRY, OR CONCRETE U.N.O.
2. SEE OVERALL FLOOR PLANS FOR EQUIPMENT SCHEDULE, MARKERBOARD AND TACKBOARD SCHEDULE, AND KEYNOTE ITEMS NOT LABELED IN DIMENSION PLANS.

KEYNOTES

tsk
225 South Arlington Avenue
Reno NV, 89501
phone: 775.857.2949
fax: 775.857.2403
www.tska.com

THESE DRAWINGS AND SPECIFICATIONS ARE THE PROPERTY OF TATE SNYDER KIMSEY ARCHITECTS AND MAY NOT BE REPRODUCED OR USED FOR ANY PURPOSE WITHOUT THE ARCHITECTS WRITTEN CONSENT. AS INSTRUMENTS OF SERVICE, THESE DOCUMENTS ARE NOT FINAL AND READY FOR USE, AND THEREFORE NOT VALID, UNLESS THEY ARE SEALED, SIGNED AND DATED.
Copyright, Ltd 2023

Consultant

PLEASE RECYCLE

Project
CITY OF FERNLEY CRRC

Job No: 21-058.00

Owner
CITY OF FERNLEY

50 % CONSTRUCTION DOCUMENTS

REVISIONS		
REV	DATE	DESCRIPTION

Sheet Title
DIMENSION & PARTITION PLAN - BASE BID

Date: MARCH 21, 2023
Sheet No:
A1.21

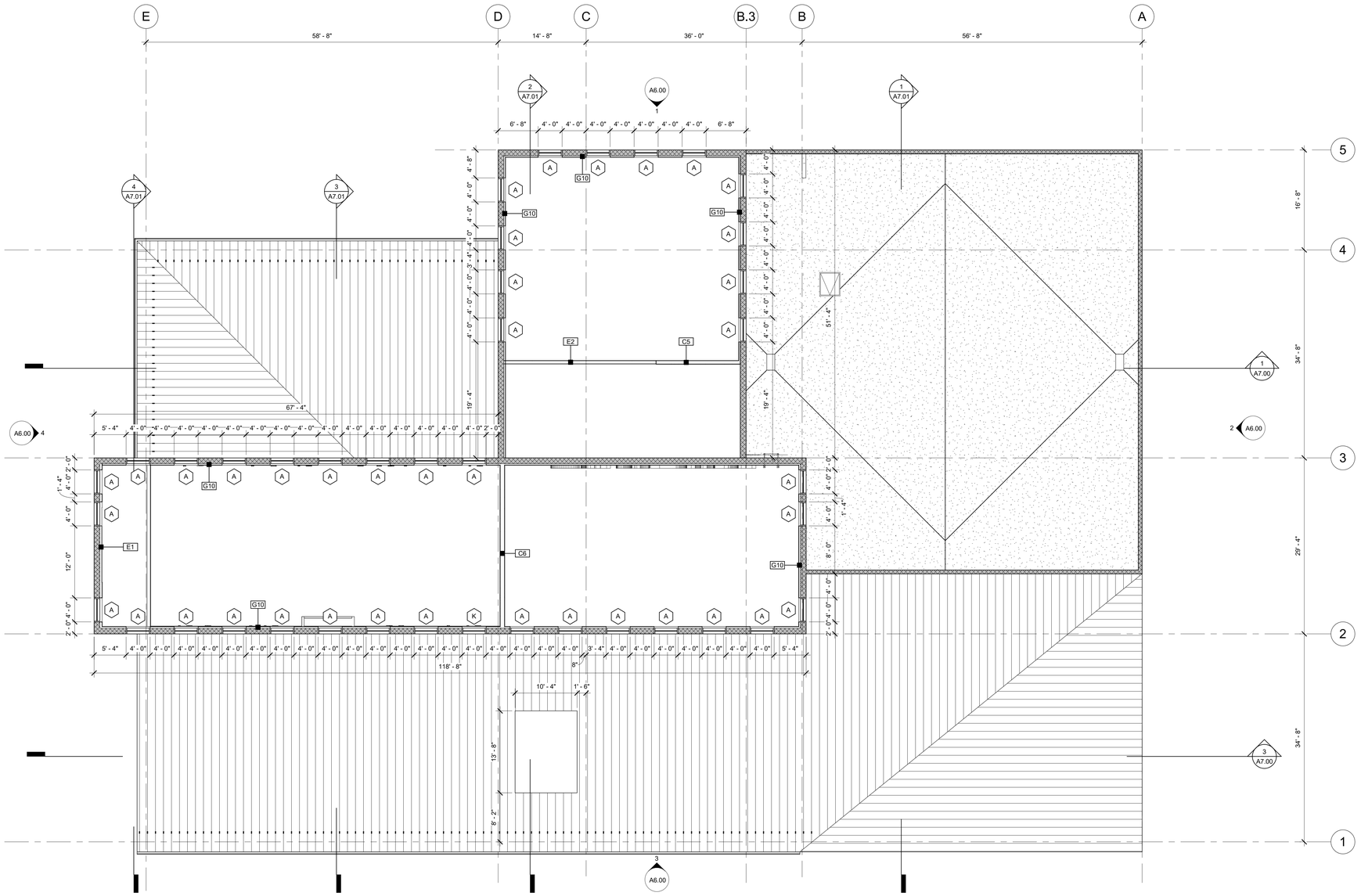

1 FLOOR PLAN HIGH WALLS - BASE BID
SCALE: 1/8" = 1'-0"

NORTH 0' 4' 8' 16'

GENERAL NOTES

1. ALL DIMENSION ARE TAKEN FROM FACE OF STUD, MASONRY, OR CONCRETE U.N.O.
2. SEE OVERALL FLOOR PLANS FOR EQUIPMENT SCHEDULE, MARKERBOARD AND TACKBOARD SCHEDULE, AND KEYNOTE ITEMS NOT LABELED IN DIMENSION PLANS.

KEYNOTES

tsk
225 South Arlington Avenue
Reno NV, 89501
phone: 775.857.2949
fax: 775.857.2403
www.tska.com

THESE DRAWINGS AND SPECIFICATIONS ARE THE PROPERTY OF TATE SNYDER KIMSEY ARCHITECTS AND MAY NOT BE REPRODUCED OR USED FOR ANY PURPOSE WITHOUT THE ARCHITECTS WRITTEN CONSENT. AS INSTRUMENTS OF SERVICE, THESE DOCUMENTS ARE NOT FINAL AND READY FOR USE, AND THEREFORE NOT VALID, UNLESS THEY ARE SEALED, SIGNED AND DATED.

Copyright, Ltd 2023

Consultant

PLEASE RECYCLE

Project
CITY OF FERNLEY CRRC

Job No: 21-058.00

Owner
CITY OF FERNLEY

50 % CONSTRUCTION DOCUMENTS

REVISIONS		
REV	DATE	DESCRIPTION

Sheet Title
DIMENSION HIGH WALL - BASE BID

Date: MARCH 21, 2023
Sheet No:

A1.22

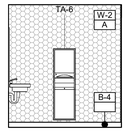

25 FAMILY RR 112 WEST
SCALE: 1/4" = 1'-0"

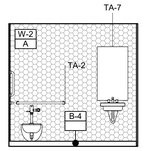

24 FAMILY RR 112 SOUTH
SCALE: 1/4" = 1'-0"

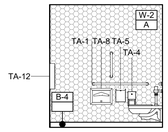

23 FAMILY RR 112 EAST
SCALE: 1/4" = 1'-0"

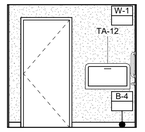

22 FAMILY RR 112 NORTH
SCALE: 1/4" = 1'-0"

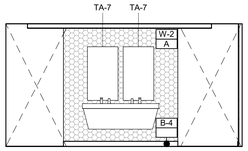

21 GN RR 109 WEST
SCALE: 1/4" = 1'-0"

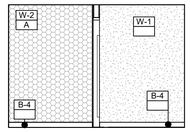

20 GN RR 109 SOUTH
SCALE: 1/4" = 1'-0"

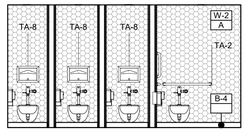

19 GN RR 109 EAST
SCALE: 1/4" = 1'-0"

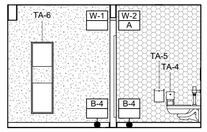

18 GN RR 109 NORTH
SCALE: 1/4" = 1'-0"

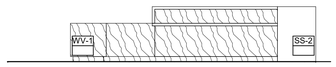

17 LOBBY 107 SOUTH
SCALE: 1/4" = 1'-0"

16 LOBBY 107 NORTH
SCALE: 1/4" = 1'-0"

15 LOBBY 107 WEST
SCALE: 1/4" = 1'-0"

14 LOBBY 107 NORTH
SCALE: 1/4" = 1'-0"

13 LOBBY 107 EAST
SCALE: 1/4" = 1'-0"

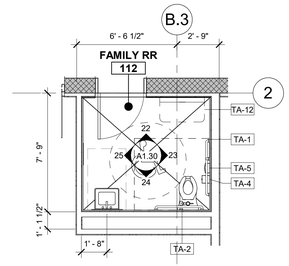

4 FAMILY RESTROOM 112
SCALE: 1/4" = 1'-0"

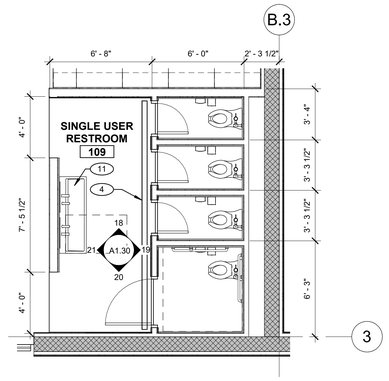

3 GENDER NEUTRAL 109
SCALE: 1/4" = 1'-0"

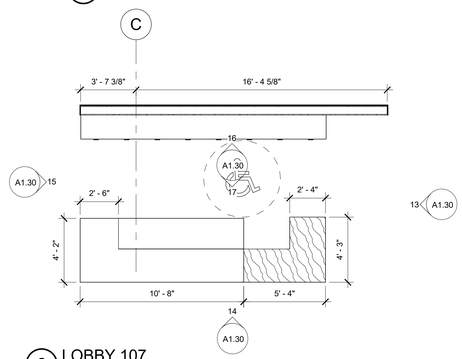

2 LOBBY 107
SCALE: 1/4" = 1'-0"

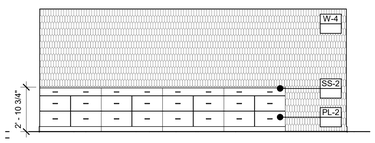

16 LOBBY 107 NORTH
SCALE: 1/4" = 1'-0"

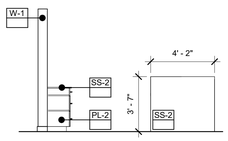

15 LOBBY 107 WEST
SCALE: 1/4" = 1'-0"

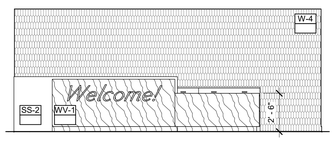

14 LOBBY 107 NORTH
SCALE: 1/4" = 1'-0"

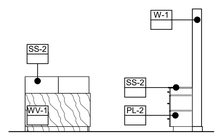

13 LOBBY 107 EAST
SCALE: 1/4" = 1'-0"

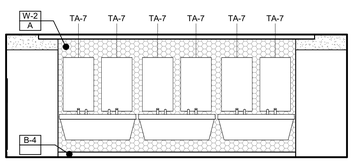

12 GN RR 106 WEST
SCALE: 1/4" = 1'-0"

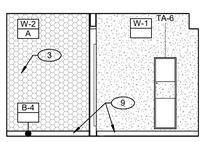

11 GN RR 106 SOUTH
SCALE: 1/4" = 1'-0"

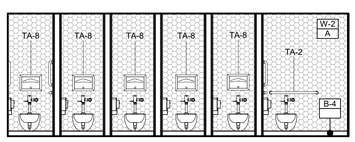

10 GN RR 106 EAST
SCALE: 1/4" = 1'-0"

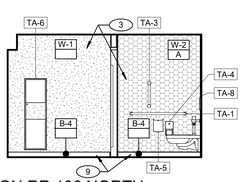

9 GN RR 106 NORTH
SCALE: 1/4" = 1'-0"

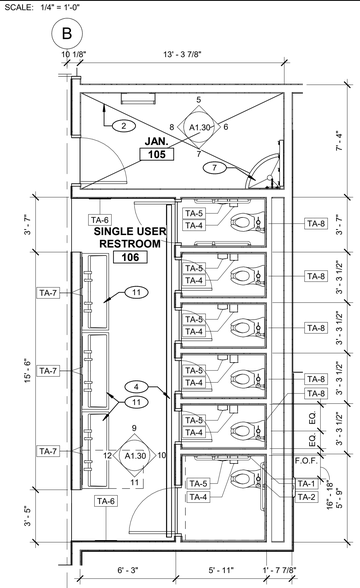

1 JANITOR 105 & GENDER NEUTRAL 106
SCALE: 1/4" = 1'-0"

SPECIALTY EQUIPMENT SCHEDULE -BASE BID

SYMBOL	DESCRIPTION	MANUFACTURER	Model	ADULT MOUNTING HEIGHT	CHILDREN MOUNTING HEIGHT	KINDER MOUNTING HEIGHT
TA-1	42" 1-1/2" DIA. S.S. GRAB BAR W/ CONCEALED MOUNTING	BOBRICK	B-6806.99 X 42"	2'-11" A.F.F. (U.N.O.)	2'-0" A.F.F. (U.N.O)	
TA-2	36" 1-1/2" DIA. S.S. GRAB BAR W/ CONCEALED MOUNTING	BOBRICK	B-6806.99 X 36"	2'-11" A.F.F. (U.N.O.)		
TA-3	18" x 1-1/2" DIA. S.S. GRAB BAR W/ CONCEALED MOUNTING	BOBRICK	B-6806.99 X 18"	3'-0" A.F.F. (U.N.O.)	2'-0" A.F.F. (U.N.O)	1'-8" A.F.F.
TA-4	TOILET PAPER DISPENSER	CONTINENTAL	401 SD	1'-7" A.F.F. (U.N.O.)	1'-4" A.F.F. (U.N.O.)	1'-2" A.F.F.
TA-5	BOBRICK B-270 CONTURA SERIES SURFACE MOUNTED SANITARY NAPKIN DISPOSAL	BOBRICK	B-270	1'-7" A.F.F. (U.N.O.)	1'-4" A.F.F. (U.N.O.)	1'-2" A.F.F.
TA-6	CLASSICSERIES® RECESSED CONVERTIBLE PAPER TOWEL DISPENSER AND WASTE RECEPTACLE	BOBRICK	B-3940	3'-10" A.F.F. (U.N.O.)	3'-0" A.F.F. (U.N.O.)	3'-0" A.F.F. (U.N.O.)
TA-7	MIRROR WELDED-FRAME MIRROR	BOBRICK	B-290 2436	6'-2" A.F.F.		
TA-8	SURFACE-MOUNTED TOILET SEAT-COVER DISPENSER	BOBRICK	B-4221	-		-
TA-9	BOBRICK B-6861.99 TWO-WALL SHOWER STALL PEENED GRAB BAR	BOBRICK	B-6861.99			
TA-10	ADA SHOWER SEAT	SEE SPECS	BASED ON ASI 8205	1'-7" A.F.F. (U.N.O.)		
TA-12	BABY CHANGING STATION	KOALA KARE	KB200-01	2'-6" A.F.F. (U.N.O.)		

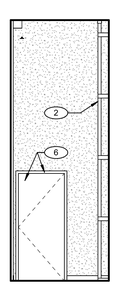

8 JAN 105 WEST
SCALE: 1/4" = 1'-0"

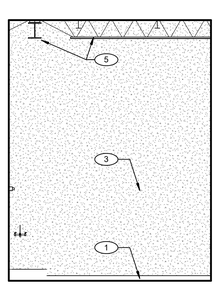

7 JAN 105 SOUTH
SCALE: 1/4" = 1'-0"

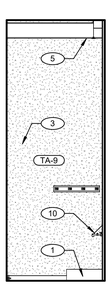

6 JAN 105 EAST
SCALE: 1/4" = 1'-0"

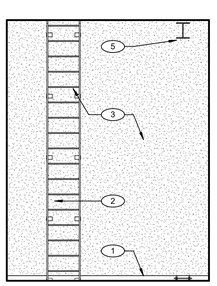

5 JAN 105 NORTH
SCALE: 1/4" = 1'-0"

GENERAL NOTES

1. ALL DIMENSIONS ARE TAKEN FROM FACE OF STUD, MASONRY, OR CONCRETE U.N.O.
2. SEE EQUIPMENT SCHEDULE AND SPECIFICATIONS FOR ADDITIONAL INFORMATION. NOT SHOWN ON DRAWINGS.
3. ALL EQUIPMENT (O.F.O.I AND C.F.C.I.), SHALL COMPLY WITH ACCESSIBILITY REQUIREMENTS.

KEYNOTES

1. RUBBER BASE, SEE FINISH SCHEDULE.
2. ROOF ACCESS LADDER, SEE ROOF DETAILS
3. FOR WALL FINISHES SEE FINISH SCHEDULE.
4. FLOOR TRENCH DRAIN, SEE PLUMBING DWGS.
5. PAINTED STRUCTURAL FRAMING, SEE STRUCTURAL DWGS.
6. PAINTED DOOR AND FRAME, SEE FINISH SCHEDULE.
7. CORNER MOP SINK, SEE KITCHEN DWGS.
9. FOR WALL BASE, SEE ROOM FINISH SCHEDULE.
10. WALL MOUNTED FAUCET, SEE PLUMBING DWGS.
11. TWO STATION LAVATORY
12. ADA DRINKING FOUNTAIN AND WATER BOTTLE FILLER.

LEGEND

tsk
225 South Arlington Avenue
Reno NV, 89501
phone: 775.857.2949
fax: 775.857.2403
www.tska.com

THESE DRAWINGS AND SPECIFICATIONS ARE THE PROPERTY OF TATE SNYDER KIMSEY ARCHITECTS AND MAY NOT BE REPRODUCED OR USED FOR ANY PURPOSE WITHOUT THE ARCHITECTS WRITTEN CONSENT. AS INSTRUMENTS OF SERVICE, THESE DOCUMENTS ARE NOT FINAL AND READY FOR USE, AND THEREFORE NOT VALID, UNLESS THEY ARE SEALED, SIGNED AND DATED.
Copyright, Ltd 2023

Consultant

PLEASE RECYCLE

Project
CITY OF FERNLEY CRRC

Job No: 21-058.00
Owner
CITY OF FERNLEY

50 % CONSTRUCTION DOCUMENTS

REVISIONS		
REV	DATE	DESCRIPTION

Sheet Title
ENLARGED RESTROOM PLANS & INTERIOR ELEVATION - BASE BID

Date: MARCH 21, 2023
Sheet No:
A1.30

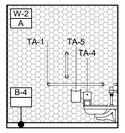

32 RR 155 WEST
SCALE: 1/4" = 1'-0"

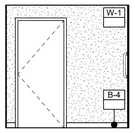

31 RR 155 SOUTH
SCALE: 1/4" = 1'-0"

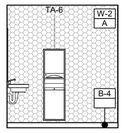

30 RR 155 EAST
SCALE: 1/4" = 1'-0"

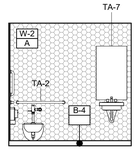

29 RR 155 NORTH
SCALE: 1/4" = 1'-0"

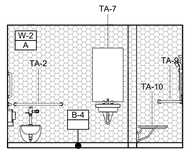

27 STAFF RR 129 WEST
SCALE: 1/4" = 1'-0"

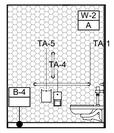

26 STAFF RR 129 SOUTH
SCALE: 1/4" = 1'-0"

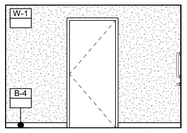

25 STAFF RR 129 EAST
SCALE: 1/4" = 1'-0"

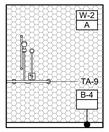

24 STAFF RR 129 NORTH
SCALE: 1/4" = 1'-0"

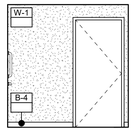

23 RR 127 WEST
SCALE: 1/4" = 1'-0"

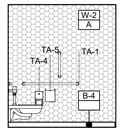

22 RR 127 SOUTH
SCALE: 1/4" = 1'-0"

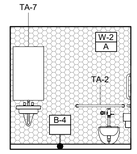

21 RR 127 EAST
SCALE: 1/4" = 1'-0"

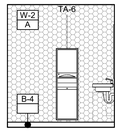

20 RR 127 NORTH
SCALE: 1/4" = 1'-0"

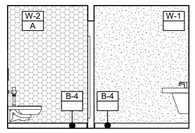

19 GN RR 125 WEST
SCALE: 1/4" = 1'-0"

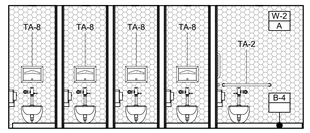

18 GN RR 125 SOUTH
SCALE: 1/4" = 1'-0"

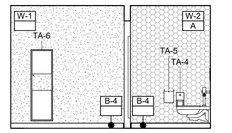

17 GN RR 125 EAST
SCALE: 1/4" = 1'-0"

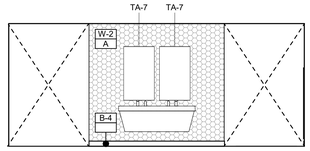

16 GN RR 125 NORTH
SCALE: 1/4" = 1'-0"

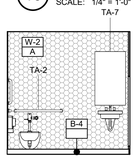

15 RR 124 WEST
SCALE: 1/4" = 1'-0"

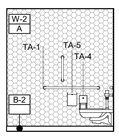

14 RR 124 SOUTH
SCALE: 1/4" = 1'-0"

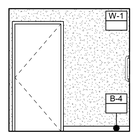

13 RR 124 EAST
SCALE: 1/4" = 1'-0"

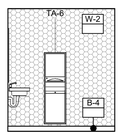

12 RR 124 NORTH
SCALE: 1/4" = 1'-0"

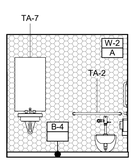

11 RR 122 WEST
SCALE: 1/4" = 1'-0"

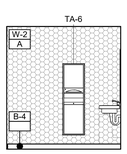

10 RR 122 SOUTH
SCALE: 1/4" = 1'-0"

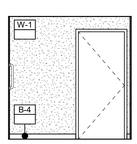

9 RR 122 EAST
SCALE: 1/4" = 1'-0"

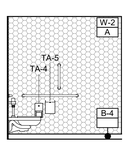

8 RR 122 NORTH
SCALE: 1/4" = 1'-0"

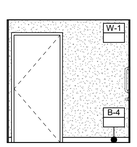

7 RR 119 WEST
SCALE: 1/4" = 1'-0"

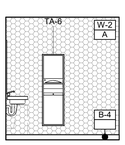

6 RR 119 SOUTH
SCALE: 1/4" = 1'-0"

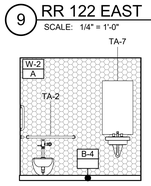

5 RR 119 EAST
SCALE: 1/4" = 1'-0"

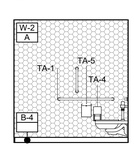

4 RR 119 NORTH
SCALE: 1/4" = 1'-0"

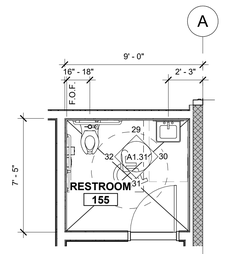

28 RESTROOM 155
SCALE: 1/4" = 1'-0"

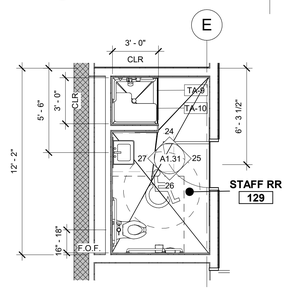

3 STAFF RR 129
SCALE: 1/4" = 1'-0"

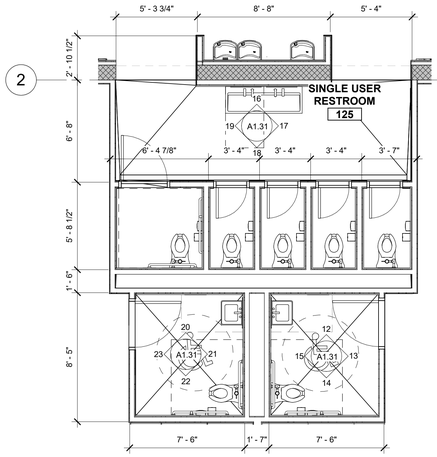

2 RR 124, 125 & 127
SCALE: 1/4" = 1'-0"

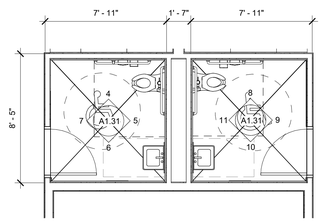

1 RR 119 & 122
SCALE: 1/4" = 1'-0"

SPECIALTY EQUIPMENT SCHEDULE -BASE BID

SYMBOL	DESCRIPTION	MANUFACTURER	Model	ADULT MOUNTING HEIGHT	CHILDREN MOUNTING HEIGHT	KINDER MOUNTING HEIGHT
TA-1	42" 1-1/2" DIA. S.S. GRAB BAR W/ CONCEALED MOUNTING	BOBRICK	B-6806.99 X 42"	2'-11" A.F.F. (U.N.O.)	2'-0" A.F.F. (U.N.O)	
TA-2	36" 1-1/2" DIA. S.S. GRAB BAR W/ CONCEALED MOUNTING	BOBRICK	B-6806.99 X 36"	2'-11" A.F.F. (U.N.O.)		
TA-3	18" x 1-1/2" DIA. S.S. GRAB BAR W/ CONCEALED MOUNTING	BOBRICK	B-6806.99 X 18"	3'-0" A.F.F. (U.N.O.)	2'-0" A.F.F. (U.N.O)	1'-8" A.F.F.
TA-4	TOILET PAPER DISPENSER	CONTINENTAL	401 SD	1'-7" A.F.F. (U.N.O.)	1'-4" A.F.F. (U.N.O.)	1'-2" A.F.F.
TA-5	BOBRICK B-270 CONTURA SERIES SURFACE MOUNTED SANITARY NAPKIN DISPOSAL	BOBRICK	B-270	1'-7" A.F.F. (U.N.O.)	1'-4" A.F.F. (U.N.O.)	1'-2" A.F.F.
TA-6	CLASSICSERIES® RECESSED CONVERTIBLE PAPER TOWEL DISPENSER AND WASTE RECEPTACLE	BOBRICK	B-3940	3'-10" A.F.F. (U.N.O.)	3'-0" A.F.F. (U.N.O.)	3'-0" A.F.F. (U.N.O.)
TA-7	MIRROR WELDED-FRAME MIRROR	BOBRICK	B-290 2436	6'-2" A.F.F.		
TA-8	SURFACE-MOUNTED TOILET SEAT-COVER DISPENSER	BOBRICK	B-4221	-		-
TA-9	BOBRICK B-6861.99 TWO-WALL SHOWER STALL PEENED GRAB BAR	BOBRICK	B-6861.99			
TA-10	ADA SHOWER SEAT	SEE SPECS	BASED ON ASI 8205	1'-7" A.F.F. (U.N.O.)		
TA-12	BABY CHANGING STATION	KOALA KARE	KB200-01	2'-6" A.F.F. (U.N.O.)		

GENERAL NOTES

1. ALL DIMENSIONS ARE TAKEN FROM FACE OF STUD, MASONRY, OR CONCRETE U.N.O.
2. SEE EQUIPMENT SCHEDULE AND SPECIFICATIONS FOR ADDITIONAL INFORMATION. NOT SHOWN ON DRAWINGS.
3. ALL EQUIPMENT (O.F.O.I AND C.F.C.I.), SHALL COMPLY WITH ACCESSIBILITY REQUIREMENTS.

KEYNOTES

1. RUBBER BASE, SEE FINISH SCHEDULE.
2. ROOF ACCESS LADDER, SEE ROOF DETAILS
3. FOR WALL FINISHES SEE FINISH SCHEDULE.
4. FLOOR TRENCH DRAIN, SEE PLUMBING DWGS.
5. PAINTED STRUCTURAL FRAMING, SEE STRUCTURAL DWGS.
6. PAINTED DOOR AND FRAME, SEE FINISH SCHEDULE.
7. CORNER MOP SINK, SEE KITCHEN DWGS.
9. FOR WALL BASE, SEE ROOM FINISH SCHEDULE.
10. WALL MOUNTED FAUCET, SEE PLUMBING DWGS.
11. TWO STATION LAVATORY
12. ADA DRINKING FOUNTAIN AND WATER BOTTLE FILLER.

tsk
225 South Arlington Avenue
Reno NV, 89501
phone: 775.857.2949
fax: 775.857.2403
www.tska.com

THESE DRAWINGS AND SPECIFICATIONS ARE THE PROPERTY OF TATE SNYDER KIMSEY ARCHITECTS AND MAY NOT BE REPRODUCED OR USED FOR ANY PURPOSE WITHOUT THE ARCHITECTS WRITTEN CONSENT. AS INSTRUMENTS OF SERVICE, THESE DOCUMENTS ARE NOT FINAL AND READY FOR USE, AND THEREFORE NOT VALID, UNLESS THEY ARE SEALED, SIGNED AND DATED.
Copyright, Ltd 2023

Consultant

PLEASE RECYCLE

Project
CITY OF FERNLEY CRRC

Job No: 21-058.00
Owner
CITY OF FERNLEY

50 % CONSTRUCTION DOCUMENTS

REVISIONS		
REV	DATE	DESCRIPTION

Sheet Title
ENLARGED RESTROOM PLANS & INTERIOR ELEVATIONS

Date: MARCH 21, 2023
Sheet No:
A1.31

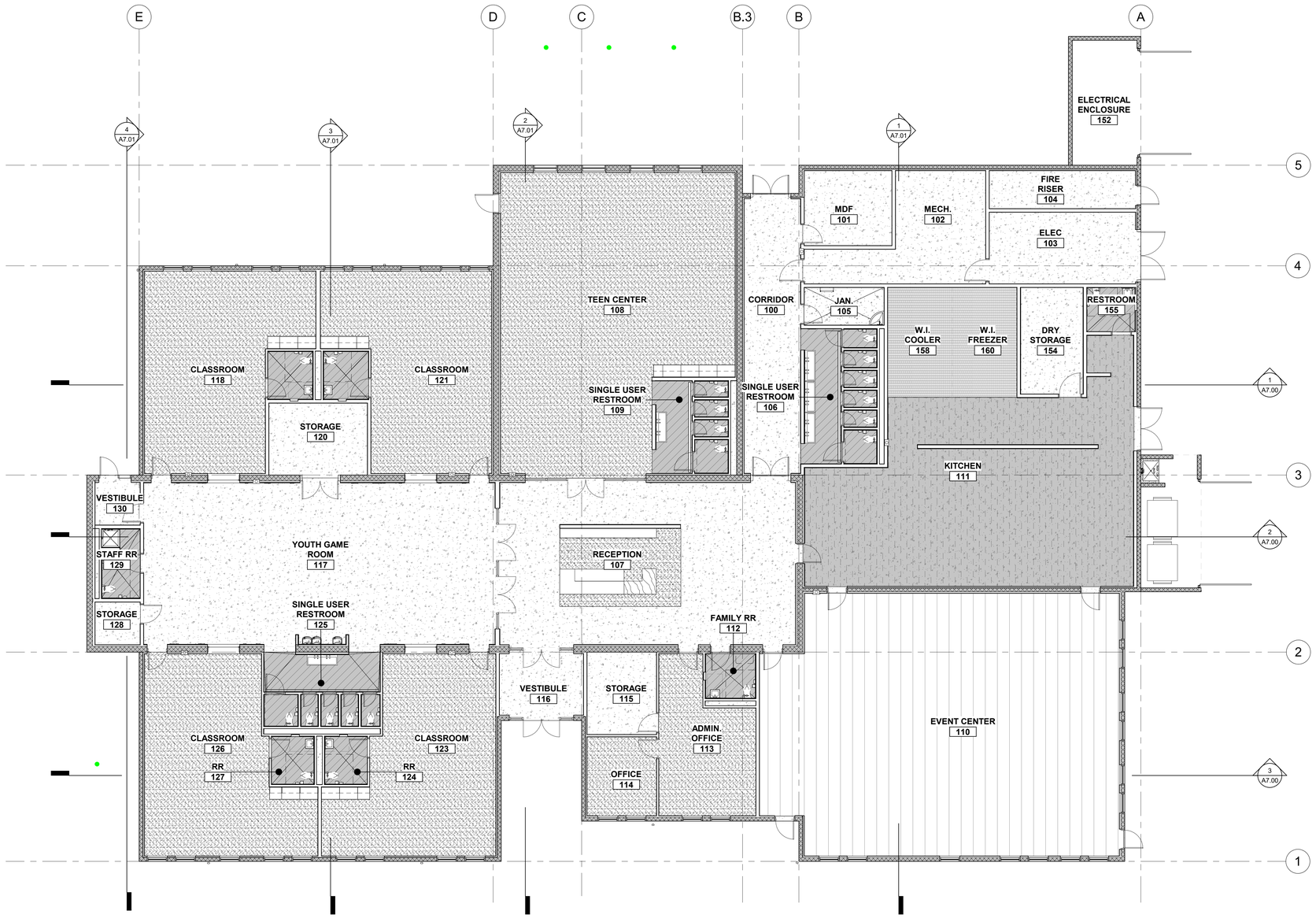

1 FINISH PLAN - BASE BID
SCALE: 1/8" = 1'-0"

NORTH 0' 4' 8' 16'

GENERAL NOTES

KEYNOTES

LEGEND

- CARPET TILE (F-1)
- RUBBER FLOORING (F-2)
- RESINOUS FLOORING (F-3)
- EPOXY FLOORING (F-4)
- LVT (F-5)
- SEALED CONCRETE (F-6)
- GYM FLOORING (F-7)

tsk
225 South Arlington Avenue
Reno NV, 89501
phone: 775.857.2949
fax: 775.857.2403
www.tska.com

THESE DRAWINGS AND SPECIFICATIONS ARE THE PROPERTY OF TATE SNYDER KIMSEY ARCHITECTS AND MAY NOT BE REPRODUCED OR USED FOR ANY PURPOSE WITHOUT THE ARCHITECTS WRITTEN CONSENT. AS INSTRUMENTS OF SERVICE, THESE DOCUMENTS ARE NOT FINAL AND READY FOR USE, AND THEREFORE NOT VALID, UNLESS THEY ARE SEALED, SIGNED AND DATED.
Copyright, Ltd 2023

Consultant

PLEASE RECYCLE

Project
CITY OF FERNLEY CRRC

Job No: 21-058.00

Owner
CITY OF FERNLEY

50 % CONSTRUCTION DOCUMENTS

REVISIONS		
REV	DATE	DESCRIPTION

Sheet Title
FINISH PLAN - BASE BID

Date: MARCH 21, 2023
Sheet No:
A1.41

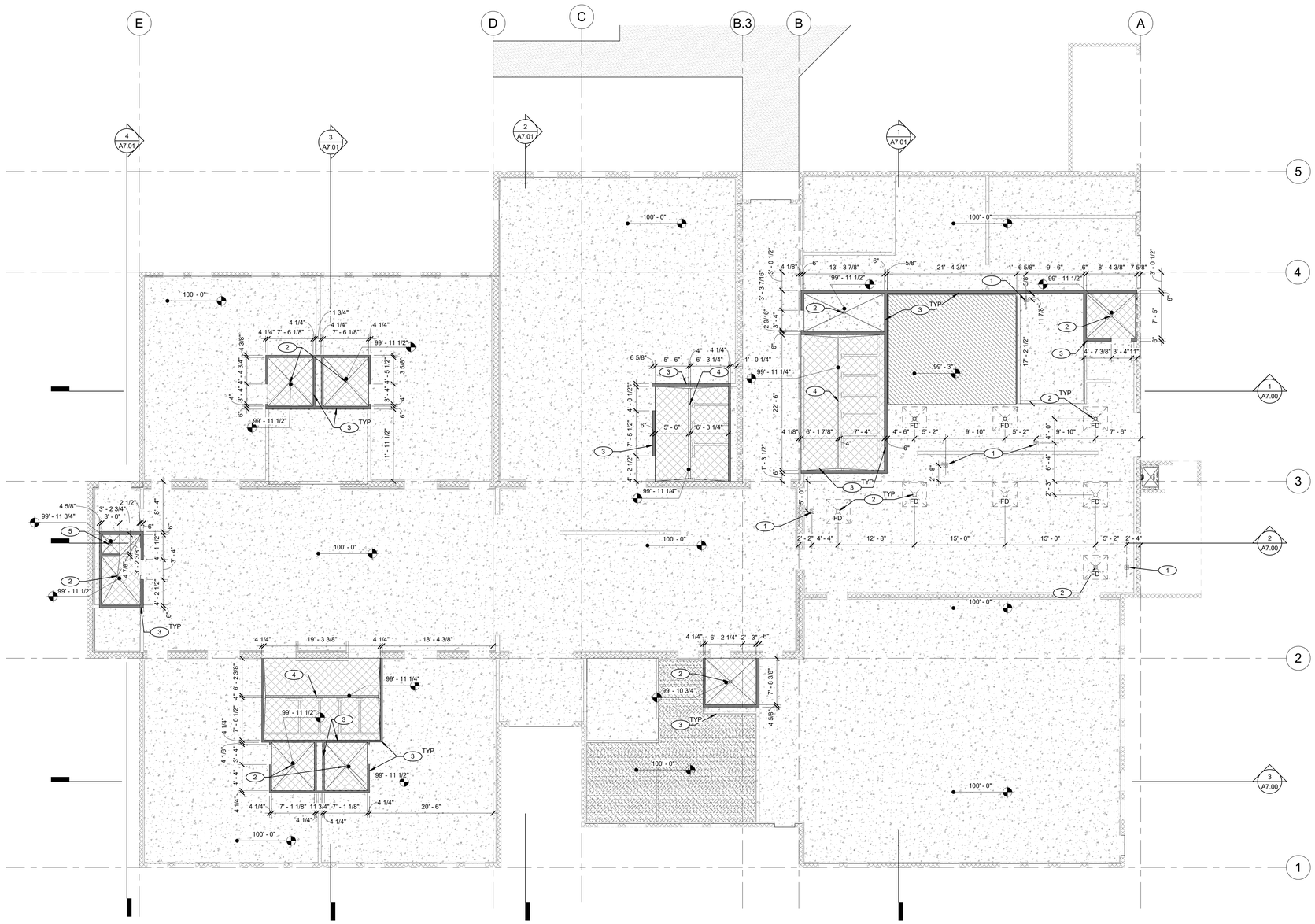

1 SLAB PLAN - BASE BID
SCALE: 1/8" = 1'-0"

NORTH 0' 4' 8' 16'

GENERAL NOTES

1. ALL DIMENSION ARE TAKEN FROM FACE OF STUD, MASONRY, OR CONCRETE U.N.O.
2. SEE STRUCTURAL, MECHANICAL, PLUMBING, AND ELECTRICAL DRAWINGS FOR ADDITIONAL WORK NOT SHOWN ON THIS DRAWING.
3. SEE ELECTRICAL DRAWINGS FOR INFORMATION ON ELECTRICAL/TELECOM ROOMS.
4. ALL EQUIPMENT (O.F.O.I AND C.F.C.I.), SHALL COMPLY WITH ACCESSIBILITY REQUIREMENTS.

KEYNOTES

1. DEEP FLOOR DRAIN, SEE FOOD SERVICE & PLUMBING DWGS.
2. FLOOR DRAIN, SLOPE PER CODE, SEE PLUMBING DWGS.
3. 4" HIGH CONCRETE CURB, SEE STRUCT. DWGS.
4. FLOOR TRENCH DRAIN, SLOPE PER CODE, SEE PLUMBING DWGS.
5. SHOWER DRAIN, SLOPE PER CODE, SEE PLUMBING DWGS.

LEGEND

- DEPRESSED SLAB - REFER TO PLAN FOR DEPTH
- SLOPED SLAB - REFER TO PLAN FOR SLOPE AND ELEVATIONS
- UNDERSIDE OF SLAB EXPOSED TO EXTERIOR
- FD — FLOOR DRAIN, PROVIDE SLOPES TO DRAIN (1/8" PER 1'-0") - REFER TO PLUMBING DRAWINGS
- CONCRETE CURB - REFER TO PLAN FOR THICKNESS, HEIGHT, AND EXTENTS
- FB — FLOOR BOX - REFER TO ELECTRICAL & LOW VOLTAGE DRAWINGS

tsk
225 South Arlington Avenue
Reno NV, 89501
phone: 775.857.2949
fax: 775.857.2403
www.tska.com

THESE DRAWINGS AND SPECIFICATIONS ARE THE PROPERTY OF TATE SNYDER KIMSEY ARCHITECTS AND MAY NOT BE REPRODUCED OR USED FOR ANY PURPOSE WITHOUT THE ARCHITECTS WRITTEN CONSENT. AS INSTRUMENTS OF SERVICE, THESE DOCUMENTS ARE NOT FINAL AND READY FOR USE, AND THEREFORE NOT VALID, UNLESS THEY ARE SEALED, SIGNED AND DATED.

Copyright, Ltd 2023

Consultant

PLEASE RECYCLE

Project
CITY OF FERNLEY CRRC

Job No: 21-058.00

Owner
CITY OF FERNLEY

50 % CONSTRUCTION DOCUMENTS

REVISIONS		
REV	DATE	DESCRIPTION

Sheet Title
ENLARGED SLAB PLAN - BASE BID

Date: MARCH 21, 2023

Sheet No:
A1.51

ROOM FINISH SCHEDULE

ROOM NO	ROOM NAME	FLOORING MAT'L	FLOORING BASE	CEILING MAT'L	WALL NORTH MAT'L	WALL WEST MAT'L	WALL SOUTH MAT'L	WALL EAST MAT'L	COMMENTS
LEVEL 1									
100	CORRIDOR	F-6	B-1	C-1	W-1	W-1	W-1	W-1	
101	MDF	F-6	-	C-3	W-1	W-1	W-1	W-1	
102	MECH.	F-6	-	C-3	W-1	W-1	W-1	W-1	
103	ELEC	F-6	-	C-3	W-1	W-1	W-1	W-1	
104	FIRE RISER	F-6	-	C-3	W-1	W-1	W-1	W-1	
105	JAN.	F-6	B-2	C-3	W-1	W-1	W-1	W-1	
106	SINGLE USER RESTROOM	F-3	B-4	C-2	W-1/W-2	W-2	W-1/W-2	W-2	
107	RECEPTION	F-1/F-6	B-1	C-3	W-5	W-1	W-1	W-1	
108	TEEN CENTER	F-1	B-2	C-3					
109	SINGLE USER RESTROOM	F-3	B-4	C-2	W-1/W-2	W-2	W-1/W-2	W-2	
110	EVENT CENTER	F-5	B-2	C-1	W-1/W-5	W-1/W-6	W-1	W-6	
111	KITCHEN	F-4	B-3	C-2	W-1	W-1	W-1	W-1	
112	FAMILY RR	F-3	B-4	C-2	W-1	W-2	W-2	W-2	
113	ADMIN. OFFICE	F-6	B-2	C-1	W-1	W-1	W-1	W-1	
114	OFFICE	F-6	B-2	C-1	W-1	W-1	W-1	W-1	
115	STORAGE	F-6	B-2	C-3	W-1	W-1	W-1	W-1	
116	VESTIBULE	F-6	B-2	C-1	W-1	W-1	W-1	W-1	
117	YOUTH GAME ROOM	F-6	B-1	C-3	W-1/W-6	W-1/W-5	W-1/W-6	W-1/W-7	
118	CLASSROOM	F-1	B-2	C-1					
119	RR	F-3	B-4	C-2	W-2	W-1	W-2	W-2	
120	STORAGE	F-6	B-2	C-3	W-1	W-1	W-1	W-1	
121	CLASSROOM	F-1	B-2	C-1					
122	RR	F-3	B-4	C-2	W-2	W-2	W-2	W-1	
123	CLASSROOM	F-1	B-2	C-1					
124	RR	F-3	B-4	C-2	W-2	W-2	W-2	W-1	
125	SINGLE USER RESTROOM	F-3	B-2	C-2	W-2	W-1/W-2	W-2	W-1/W-2	
126	CLASSROOM	F-1	B-2	C-1					
127	RR	F-3	B-4	C-2	W-2	W-1	W-2	W-2	
128	STORAGE	F-6	B-2	C-2	W-1	W-1	W-1	W-1	
129	STAFF RR	F-3	B-4	C-2	W-2	W-2	W-2	W-1	
130	VESTIBULE	F-6	B-2	C-2					
152	ELECTRICAL ENCLOSURE	F-6	-	C-4					
153	TRASH BIN	F-6	-	-					
154	DRY STORAGE	F-6	-	C-3					
155	RESTROOM	F-3	B-4	C-3	W-2	W-2	W-1	W-2	
158	W.I. COOLER	F-6	-	C-4					
160	W.I. FREEZER	F-6	-	C-4					

MATERIAL SCHEDULE

KEY	DESCRIPTION	MANUFACTURER (BASIS OF DESIGN)	MODEL NUMBER	COLOR	REMARKS
FLOORING					SEE FLOOR FINISH PLANS
F-1	CARPET TILE	INTERFACE	AERIAL COLLECTION AE315 - 9.845" x 39.38"	105817 MIST/AQUAMARINE	
F-2	RUBBER FLOORING	NORA BY INTERFACE	NORAPLAN ENVIRONCARE - 24" X 24"	7077 GRADUATION	
F-3	RESINOUS FLOORING	DUR-A-FLEX	ACCELERA C	FIELDSTONE	
F-4	EPOXY FLOORING	STONHARD	STONTEC 6"		
F-5	LVT	INTERFACE	NATURAL WOODGRAINS - 9.845" x 39.38"	A00210 TEAK	INSTALATION PATTERN: HERRINGBONE
F-6	CONCRETE				
F-7	GYM FLOORING	GERFLOR	TARAFLEX MULTI-USE 6.2	6381 MAPLE	
BASE					
B-1	WOOD		4"		
B-2	RUBBER WALL BASE	JOHNSONITE	TRADITIONL VINYL 4" 1/8 VN2	STONE COTTAGE	
B-3	TILE		4"		
B-4	RESINOUS COVE BASE	DUR-A-FLEX	ACCELERA C	FIELDSTONE	RESTROOMS
CEILING					
C-1	ACOUSTIC CEILING TILE	USG	TYPICAL 2' X 2', MARS HIGH CAC; #86186	WHITE TILE/WHITE GRID	GRID USG DX/DXL
C-2	ACOUSTIC CEILING TILE	USG	KITCHEN LAY-IN PANEL CLIMAPLUS PERFORMANCE; #3410 2' x 4'	WHITE TILE/WHITE GRID	GRID USG DX/DXL
C-3	PAINTED GYPSUM BOARD				SEE PAINT COLOR SCHEDULE
C-4	EXPOSED STRUCTURE				SEE PAINT COLOR SCHEDULE
C--W1	WOOD CEILING	ACOUFELT	SOFTENUP CEILING SYSTEM 2'X3' SLATS ON T-BAR CEILING		
WALLS					
W-1	PAINTED GYPSUM BOARD				SEE SEE PAINT SCHEDULE
W-2	TILE				
	A PORCELAIN TILE	DALTILE	BEE HIVE MEDLEY	SUN GREEN/BLUE P044	
	B GLAZED PORCELAIN MOSAIC	EMSER	CUADRO 9"X14" W50CUAFRRO0914MOP	ROYAL	CLASSROOM BLACKSPLASH/WATER FOUNTAIN
	C CERAMIC MOSAIC	EMSER	NEWTRO 12" X 12" W51NEWTNA1212MSKP	NAVY	TEEN CLASSROOM/WATER FOUNTAIN
W-3	WALL PADDING	RUBBER FLOORING INC.	2' X 5' WALL PADS	NAVY BLUE	
W-4	WOOD TILE	TEAKITILES	KAI	LIGHT RUSTIC - 083 OCEANSIDE	WALLMOUNTED/TEAK BACKING
W-5	VINYL GRAPHIC	KOROSEAL	DSO121 EGGSHELL SUBSTRATE	WHITE	CUSTOM GRAPHICS
W-6	PLYWOOD WALL				
W-7	STOREFRONT				
COUNTERTOPS					
SS-1	EVERFORM SOLID SURFACE	FORMICA	505	SEAGLASS	COUNTERTOPS/CLASSROOM
SS-2	EVERFORM SOLID SURFACE	FORMICA	102	ARCTIC	RECEPTION/CHECK IN DESK
PLASTIC LAMINATE					
PL-1	PLASTIC LAMINATE	FORMICA	8910 RAW BIRCHLY	MATTE FINISH	CASEWORK
PL-2	FENIX PLASTIC LAMINATE		JO720 0.8MM	NERO NIGRO	RECEPTION/CHECK IN DESK
WOOD VENEER					
WV-1	WOOD VENEER				

BUILDING MATERIAL SCHEDULE - EXTERIOR

KEY	DESCRIPTION	MANUFACTURER (BASIS OF DESIGN)	MODEL NUMBER	COLOR	REMARKS
CMU					
CMU-1	EXTERIOR CMU	BASELITE			SEE EXTERIOR ELEVATION
	CMU VENEER 1 & 2				
STANDING SEAM ROOF					
SR-1	STANDING SEAM ROOF	AEP SPAN	SPANSEAM		SEE EXTERIOR ELEVATION
WALL PANEL					
WP-1	ARCHITECTURAL WALL PANEL	NICHIHA	WOOD SERIES		SEE EXTERIOR ELEVATION

tsk
225 South Arlington Avenue
Reno NV, 89501
phone: 775.857.2949
fax: 775.857.2403
www.tska.com

THESE DRAWINGS AND SPECIFICATIONS ARE THE PROPERTY OF TATE SNYDER KIMSEY ARCHITECTS AND MAY NOT BE REPRODUCED OR USED FOR ANY PURPOSE WITHOUT THE ARCHITECTS WRITTEN CONSENT. AS INSTRUMENTS OF SERVICE, THESE DOCUMENTS ARE NOT FINAL AND READY FOR USE, AND THEREFORE NOT VALID, UNLESS THEY ARE SEALED, SIGNED AND DATED.

Copyright, Ltd 2023

Consultant

PLEASE RECYCLE

Project
CITY OF FERNLEY CRRC

Job No: 21-058.00

Owner
CITY OF FERNLEY

50 % CONSTRUCTION DOCUMENTS

REVISIONS		
REV	DATE	DESCRIPTION

Sheet Title
MATERIAL FINISH SCHEDULE

Date: MARCH 21, 2023
Sheet No:
A2.00

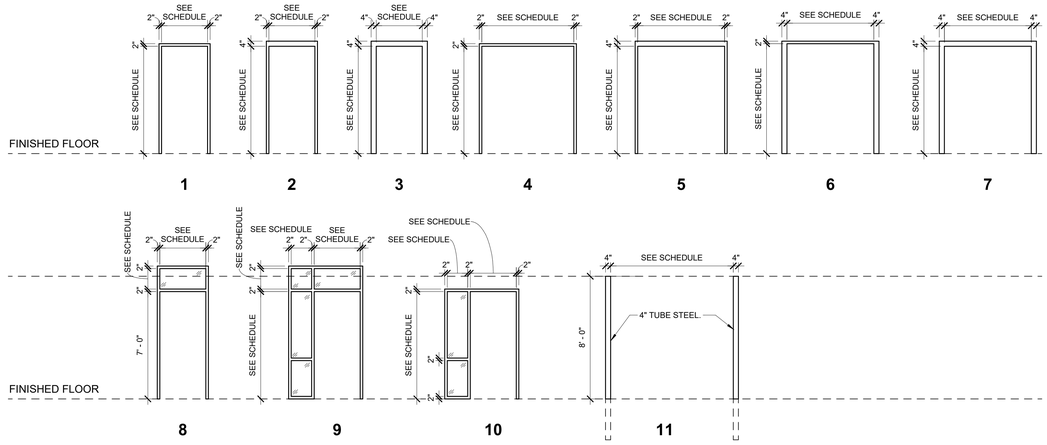

DOOR FRAME TYPES
SCALE: 1/4" = 1'-0"

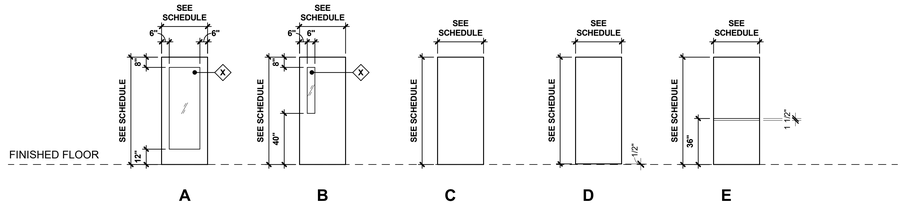

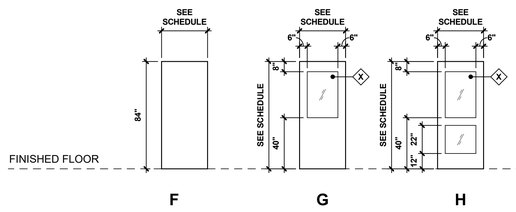

DOOR PANEL TYPES
SCALE: 1/4" = 1'-0"

DOOR SCHEDULE

DR. NO.	RM. NO.	PR	PANEL SIZE W	PANEL SIZE H	PANEL T	PANEL TYPE	PANEL MAT'L	FRAME TYPE	FRAME MAT'L	FRAME HEAD DTL	FRAME SILL DTL	FRAME JAMB DTL LATCH	FRAME JAMB DTL HINGE	HDWR	LABEL	REMARKS
100	100	PR	6' - 0"	7' - 0"	0"	A	AL	4	AL					08		
101	101		3' - 0"	7' - 0"	1 3/4"	C	HM	1	HM					13		
102	102		3' - 6"	7' - 0"	1 3/4"	C	HM	1	HM					14		
103A	103	PR	4' - 0"	7' - 0"	1 3/4"	C	HM	4	HM					11		
103B	103		3' - 6"	7' - 0"	1 3/4"	C	HM	1	HM					18		
104	104		3' - 0"	7' - 0"	1 3/4"	C	HM	2	HM					10		
105	105		3' - 0"	7' - 0"	1 3/4"	C	HM	1	HM					16		
106A	106		2' - 8"	7' - 0"	1 3/4"	D	PL	1	HM					30		1/2" GAP
106B	106		2' - 0"	7' - 0"	1 3/4"	D	PL	1	HM					30		1/2" GAP
106C	106		2' - 0"	7' - 0"	1 3/4"	D	PL	1	HM					30		1/2" GAP
106D	106		2' - 0"	7' - 0"	1 3/4"	D	PL	1	HM					30		1/2" GAP
106E	106		2' - 0"	7' - 0"	1 3/4"	D	PL	1	HM					30		1/2" GAP
106F	106		3' - 0"	7' - 0"	1 3/4"	D	PL	1	HM					30		1/2" GAP
107A	117	PR	6' - 0"	7' - 0"	1 3/4"	G	AL	4	AL					06		
107B	117	PR	6' - 0"	7' - 0"	1 3/4"	G	AL	4	AL					06		
107C	107	PR	6' - 0"	7' - 0"	1 3/4"	A	AL	6	AL					09		
108A	108	PR	6' - 0"	7' - 0"	1 3/4"	G	AL	4	AL					06		
108B	108		3' - 0"	7' - 0"	1 3/4"	A	AL	8	AL					04		
109A	109		2' - 0"	7' - 0"	1 3/4"	D	PL	1	HM					30		1/2" GAP
109B	109		2' - 0"	7' - 0"	1 3/4"	D	PL	1	HM					30		1/2" GAP
109C	109		2' - 0"	7' - 0"	1 3/4"	D	PL	1	HM					30		1/2" GAP
109D	109		3' - 0"	7' - 0"	1 3/4"	D	PL	1	HM					30		1/2" GAP
110A	110		3' - 0"	7' - 0"	1 3/4"	A	HM	2	HM					12		
110B	110		3' - 0"	7' - 0"	1 3/4"	A	AL	8	AL					03		
110C	107		3' - 0"	7' - 0"	1 3/4"	A	HM	2	HM					22		
111A	111	PR	3' - 6"	7' - 0"	1 3/4"	C	HM	5	HM					11		
111B	111		3' - 0"	7' - 0"	1 3/4"	C	HM	2	HM					33		
111C	111		3' - 0"	7' - 0"	1 3/4"	C	HM	2	HM					33		
111D	111		3' - 0"	7' - 0"	1 3/4"	C	HM	2	HM					27		
112	112		3' - 0"	7' - 0"	1 3/4"	C	HM	2	HM					28		
113	113		3' - 0"	7' - 0"	1 3/4"	A	HM	2	HM					26		
114	114		3' - 0"	7' - 0"	1 3/4"	B	HM	1	HM					31		
115	115		3' - 0"	7' - 0"	1 3/4"	C	HM	1	HM					16		
116A	116	PR	6' - 0"	5' - 10 3/4"	1 3/4"	G								02		
116B	116	PR	6' - 0"	7' - 0"	1 3/4"	G								07		ELECTRIFIED OPENING
118	118		3' - 0"	7' - 0"	1 3/4"	A	HM	2	HM					23		
119	118		3' - 0"	7' - 0"	1 3/4"	C	HM	1	HM					30		
120	120		3' - 0"	7' - 0"	1 3/4"	E	HM	7	HM					21		
121	121		3' - 0"	7' - 0"	1 3/4"	A	HM	2	HM					23		
122	122		3' - 0"	7' - 0"	1 3/4"	C	HM	1	HM					30		
123	123		3' - 0"	7' - 0"	1 3/4"	A	HM	2	HM					23		
124	123		3' - 0"	7' - 0"	1 3/4"	C	HM	1	HM					30		
125A	125		3' - 0"	7' - 0"	1 3/4"	D	PL	1	HM					30		1/2" GAP
125B	125		2' - 0"	7' - 0"	1 3/4"	D	PL	1	HM					30		1/2" GAP
125C	125		2' - 0"	7' - 0"	1 3/4"	D	PL	1	HM					30		1/2" GAP
125D	125		2' - 0"	7' - 0"	1 3/4"	D	PL	1	HM					30		1/2" GAP
125E	125		2' - 0"	7' - 0"	1 3/4"	D	PL	1	HM					30		1/2" GAP
126	126		3' - 0"	7' - 0"	1 3/4"	A	HM	2	HM					23		
127	127		3' - 0"	7' - 0"	1 3/4"	C	HM	1	HM					30		
128	128		3' - 0"	7' - 0"	1 3/4"	C	HM	1	HM					16		
129	129		3' - 0"	7' - 0"	1 3/4"	C	HM	1	HM					29		
130A	130		3' - 0"	7' - 0"	1 3/4"	A	AL	9	AL					04		
130B	130		3' - 0"	7' - 0"	1 3/4"	A	AL	1	AL					05		
152	152		17' - 1"	8' - 5 1/2"	2"	GATE	HM	11	HM					35		
153	153		17' - 1"	8' - 6 1/2"	2"	GATE	HM	11	HM					35		
154	154		3' - 6"	7' - 0"	1 3/4"	C	HM	1	HM					15		
155	155		3' - 0"	7' - 0"	1 3/4"	C	HM	1	HM					28		

tsk
225 South Arlington Avenue
Reno NV, 89501
phone: 775.857.2949
fax: 775.857.2403
www.tska.com

THESE DRAWINGS AND SPECIFICATIONS ARE THE PROPERTY OF TATE SNYDER KIMSEY ARCHITECTS AND MAY NOT BE REPRODUCED OR USED FOR ANY PURPOSE WITHOUT THE ARCHITECTS WRITTEN CONSENT. AS INSTRUMENTS OF SERVICE, THESE DOCUMENTS ARE NOT FINAL AND READY FOR USE, AND THEREFORE NOT VALID, UNLESS THEY ARE SEALED, SIGNED AND DATED.
Copyright, Ltd 2023

Consultant

PLEASE RECYCLE

Project
CITY OF FERNLEY CRRC

Job No: 21-058.00

Owner
CITY OF FERNLEY

50 % CONSTRUCTION DOCUMENTS

REVISIONS		
REV	DATE	DESCRIPTION

Sheet Title
DOOR SCHEDULE

Date: MARCH 21, 2023
Sheet No:
A2.10

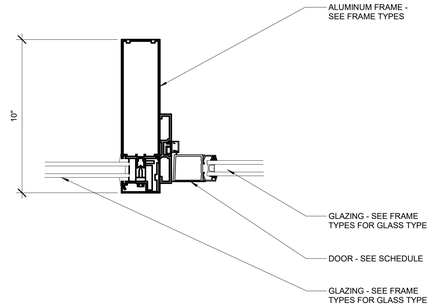

12 INTERMEDIATE MULLION DETAIL
SCALE: 3" = 1'-0"

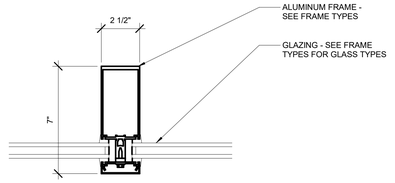

8 INTERMEDIATE MULLION DETAIL
SCALE: 3" = 1'-0"

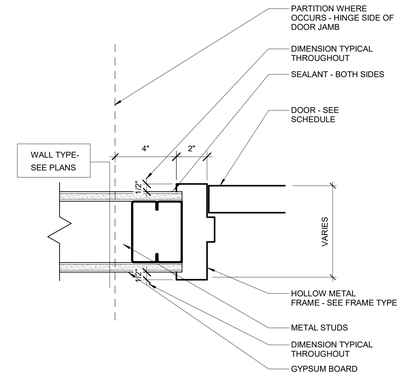

4 JAMB
SCALE: 3" = 1'-0"

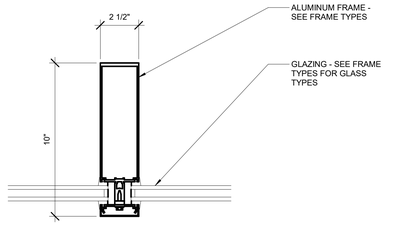

11 INTERMEDIATE MULLION DETAIL
SCALE: 3" = 1'-0"

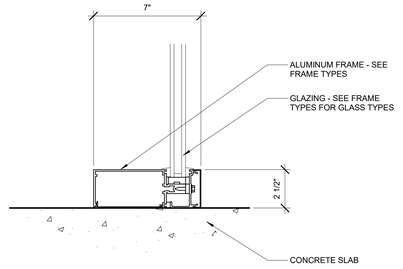

7 SILL
SCALE: 3" = 1'-0"

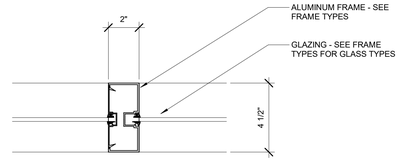

3 INTERMEDIATE MULLION DETAIL
SCALE: 3" = 1'-0"

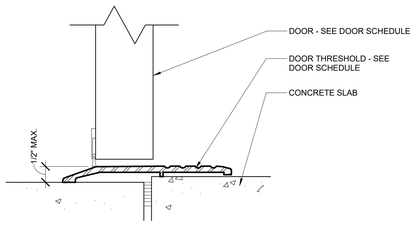

14 DOOR THRESHOLD
SCALE: 6" = 1'-0"

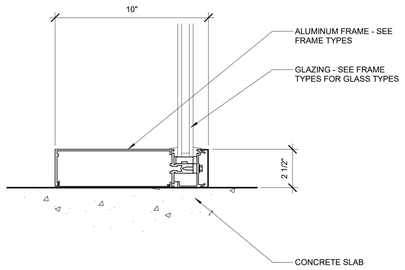

10 SILL
SCALE: 3" = 1'-0"

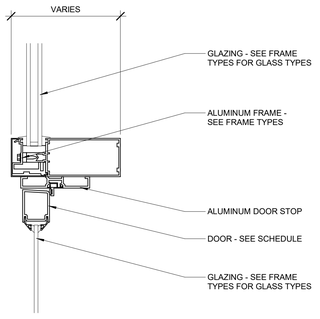

6 HEAD
SCALE: 3" = 1'-0"

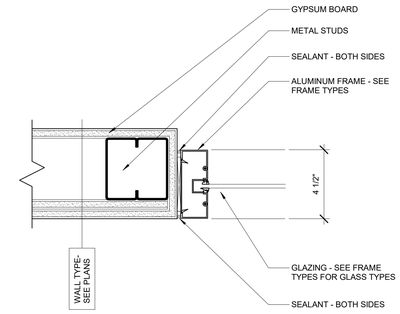

2 SILL / JAMB (SIM.)
SCALE: 3" = 1'-0"

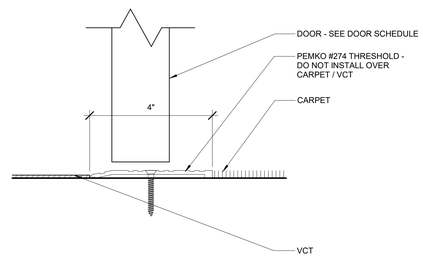

13 THRESHOLD DETAIL
SCALE: 6" = 1'-0"

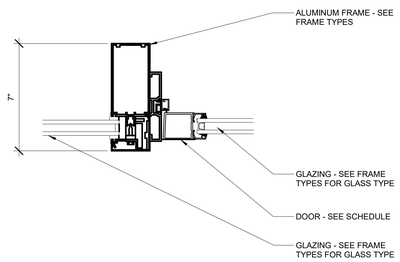

9 INTERMEDIATE MULLION DETAIL
SCALE: 3" = 1'-0"

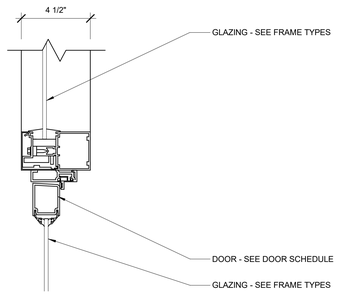

5 DOOR HEAD
SCALE: 3" = 1'-0"

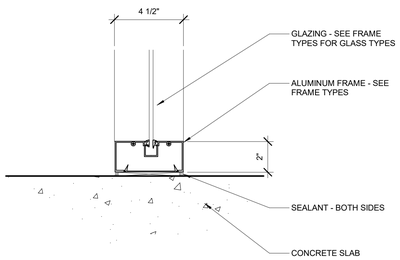

1 SILL
SCALE: 3" = 1'-0"

tsk
225 South Arlington Avenue
Reno NV, 89501
phone: 775.857.2949
fax: 775.857.2403
www.tska.com

THESE DRAWINGS AND SPECIFICATIONS ARE THE PROPERTY OF TATE SNYDER KIMSEY ARCHITECTS AND MAY NOT BE REPRODUCED OR USED FOR ANY PURPOSE WITHOUT THE ARCHITECTS WRITTEN CONSENT. AS INSTRUMENTS OF SERVICE, THESE DOCUMENTS ARE NOT FINAL AND READY FOR USE, AND THEREFORE NOT VALID, UNLESS THEY ARE SEALED, SIGNED AND DATED.
Copyright, Ltd 2023

Consultant

PLEASE RECYCLE

Project
CITY OF FERNLEY CRRC

Job No: 21-058.00

Owner
CITY OF FERNLEY

50 % CONSTRUCTION DOCUMENTS

REVISIONS		
REV	DATE	DESCRIPTION

Sheet Title
DOOR DETAILS

Date: MARCH 21, 2023
Sheet No:
A2.20

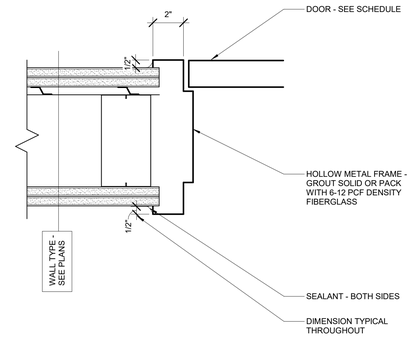

8 JAMB / HEAD AT SOUND DOOR (SIM.)
SCALE: 3" = 1'-0"

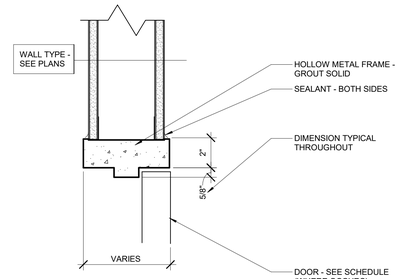

4 HEAD
SCALE: 3" = 1'-0"

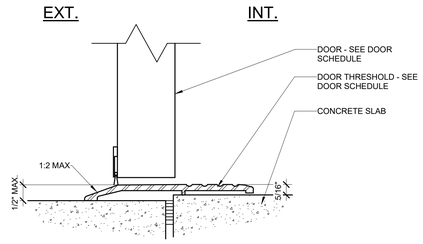

11 EXTERIOR DOOR THRESHOLD
SCALE: 6" = 1'-0"

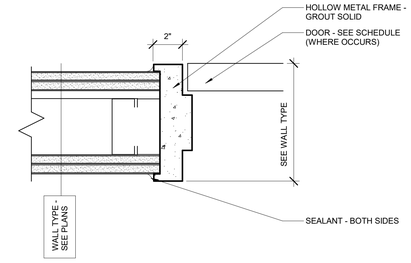

7 JAMB
SCALE: 3" = 1'-0"

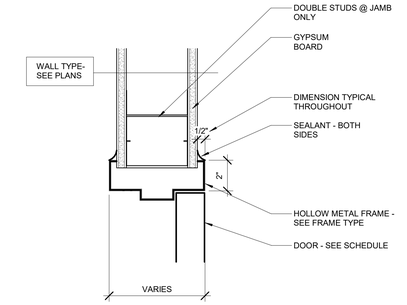

3 HEAD
SCALE: 3" = 1'-0"

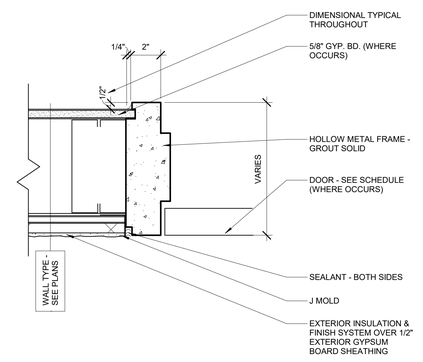

10 JAMB/HEAD SIM.
SCALE: 3" = 1'-0"

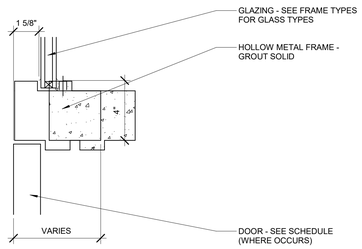

6 HEAD
SCALE: 3" = 1'-0"

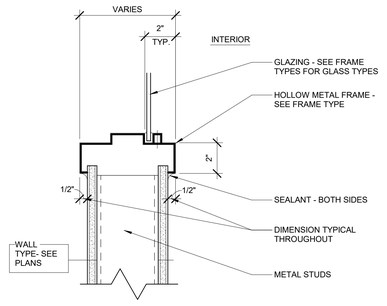

2 SILL
SCALE: 3" = 1'-0"

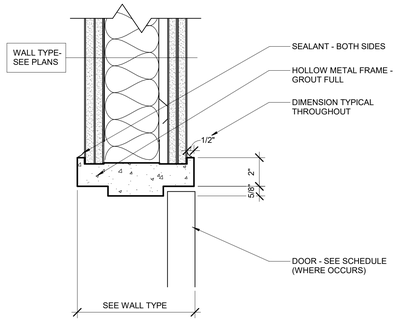

9 HEAD
SCALE: 3" = 1'-0"

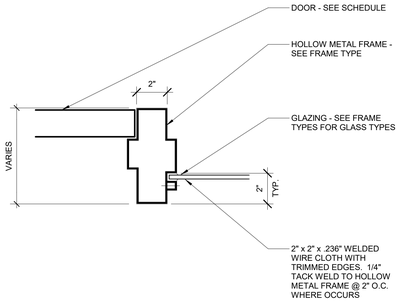

5 JAMB
SCALE: 3" = 1'-0"

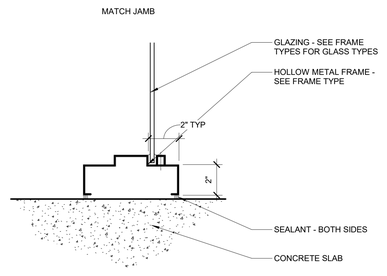

1 SILL
SCALE: 3" = 1'-0"

tsk
225 South Arlington Avenue
Reno NV, 89501
phone: 775.857.2949
fax: 775.857.2403
www.tska.com

THESE DRAWINGS AND SPECIFICATIONS ARE THE PROPERTY OF TATE SNYDER KIMSEY ARCHITECTS AND MAY NOT BE REPRODUCED OR USED FOR ANY PURPOSE WITHOUT THE ARCHITECTS WRITTEN CONSENT. AS INSTRUMENTS OF SERVICE, THESE DOCUMENTS ARE NOT FINAL AND READY FOR USE, AND THEREFORE NOT VALID, UNLESS THEY ARE SEALED, SIGNED AND DATED.

Copyright, Ltd 2023

Consultant

PLEASE RECYCLE

Project
CITY OF FERNLEY CRRC

Job No: 21-058.00

Owner
CITY OF FERNLEY

50 % CONSTRUCTION DOCUMENTS

REVISIONS		
REV	DATE	DESCRIPTION

Sheet Title
DOOR DETAILS

Date: MARCH 21, 2023

Sheet No:
A2.21

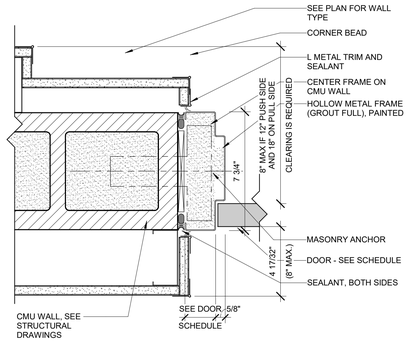

7 JAMB @ INTERIOR CMU
SCALE: 3" = 1'-0"

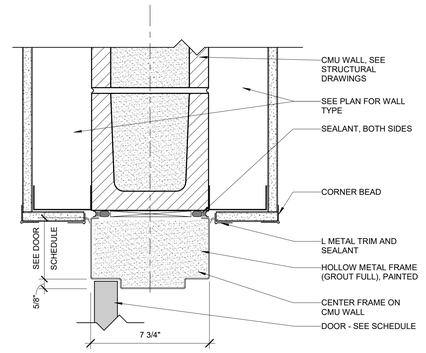

3 HEAD @ INTERIOR CMU
SCALE: 3" = 1'-0"

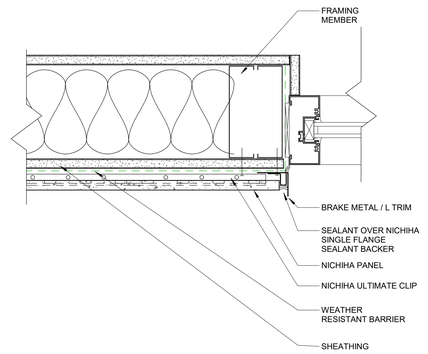

4 WINDOW JAMB @ NICHIHA
SCALE: 3" = 1'-0"

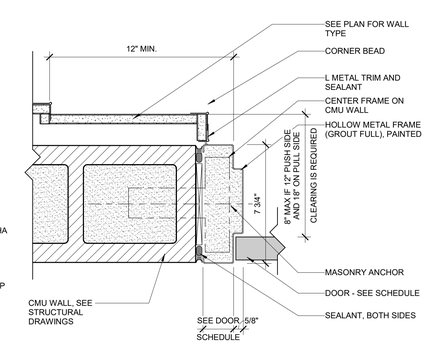

6 JAMB @ INTERIOR CMU
SCALE: 3" = 1'-0"

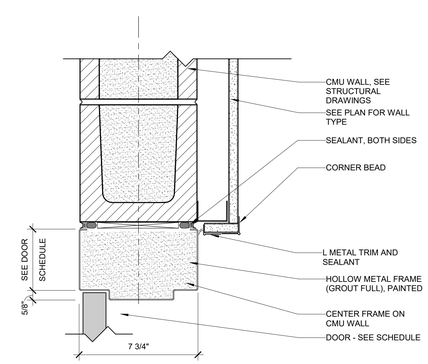

2 HEAD @ INTERIOR CMU
SCALE: 3" = 1'-0"

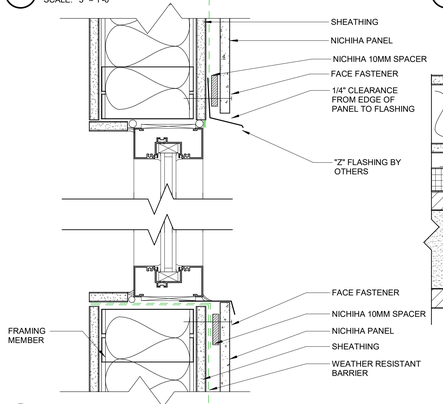

9 WINDOW HEADER & SILL @ NICHIHA
SCALE: 3" = 1'-0"

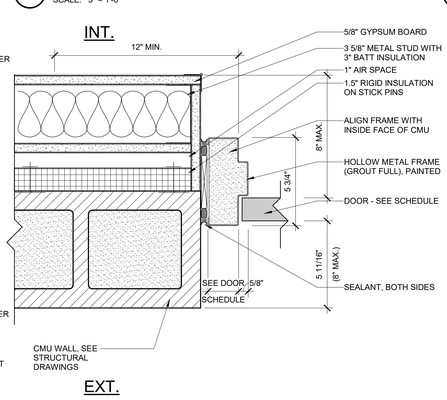

5 JAMB @ EXTERIOR CMU
SCALE: 3" = 1'-0"

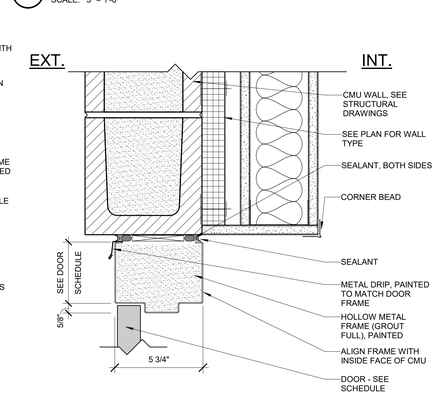

1 HEAD @ EXTERIOR CMU
SCALE: 3" = 1'-0"

tsk
225 South Arlington Avenue
Reno NV, 89501
phone: 775.857.2949
fax: 775.857.2403
www.tska.com

THESE DRAWINGS AND SPECIFICATIONS ARE THE PROPERTY OF TATE SNYDER KIMSEY ARCHITECTS AND MAY NOT BE REPRODUCED OR USED FOR ANY PURPOSE WITHOUT THE ARCHITECTS WRITTEN CONSENT. AS INSTRUMENTS OF SERVICE, THESE DOCUMENTS ARE NOT FINAL AND READY FOR USE, AND THEREFORE NOT VALID, UNLESS THEY ARE SEALED, SIGNED AND DATED.

Copyright, Ltd 2023

Consultant

PLEASE RECYCLE

Project
CITY OF FERNLEY CRRC

Job No: 21-058.00

Owner
CITY OF FERNLEY

50 % CONSTRUCTION DOCUMENTS

REVISIONS		
REV	DATE	DESCRIPTION

Sheet Title
DOOR DETAILS

Date: MARCH 21, 2023
Sheet No:
A2.22

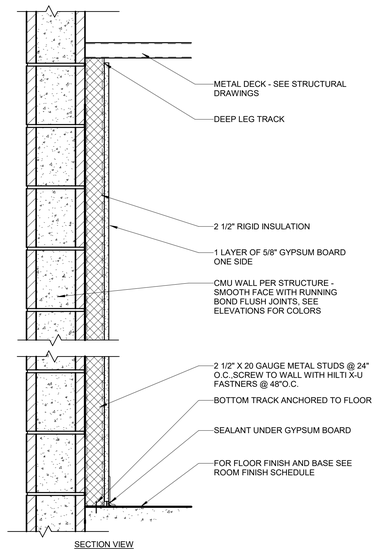

SECTION VIEW

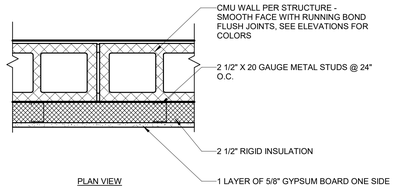

PLAN VIEW

PARTITION TYPE G10

SCALE : 1 1/2" = 1'-0"

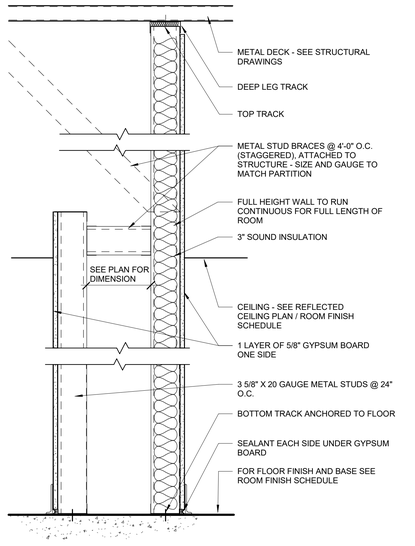

SECTION VIEW

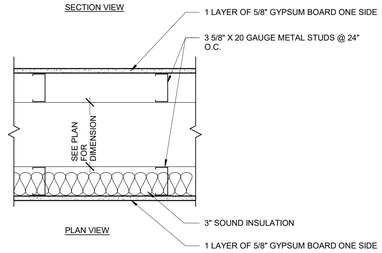

PLAN VIEW

PARTITION TYPE E3

SCALE : 1 1/2" = 1'-0"

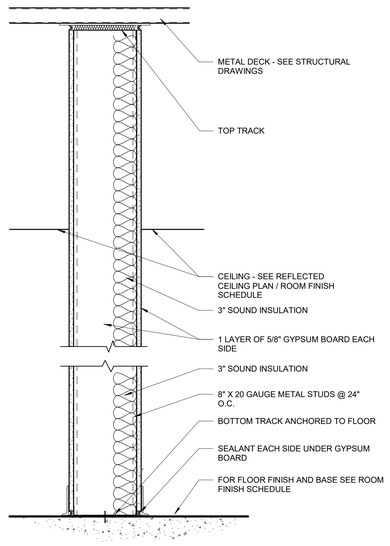

SECTION VIEW

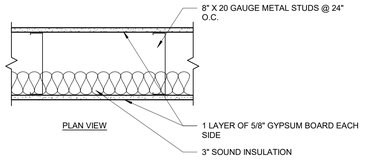

PLAN VIEW

PARTITION TYPE C6

ACOUSTICAL PARTITION

SCALE : 1 1/2" = 1'-0"

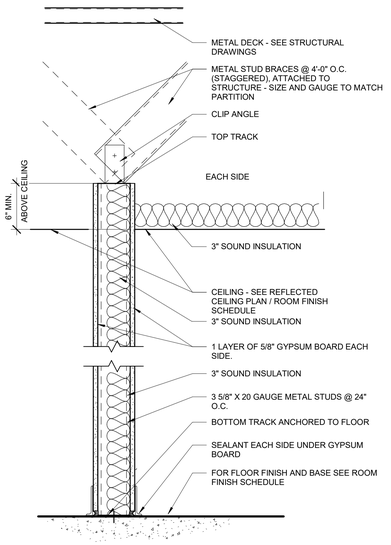

SECTION VIEW

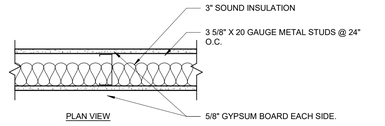

PLAN VIEW

PARTITION TYPE C3

ACOUSTICAL PARTITION

SCALE : 1 1/2" = 1'-0"

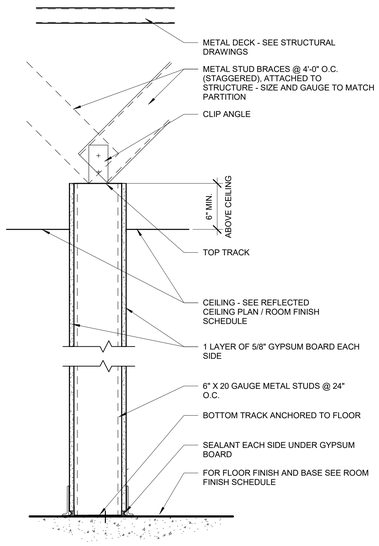

SECTION VIEW

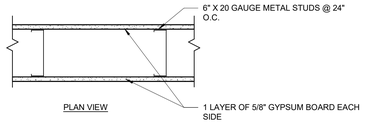

PLAN VIEW

PARTITION TYPE A2

SCALE : 1 1/2" = 1'-0"

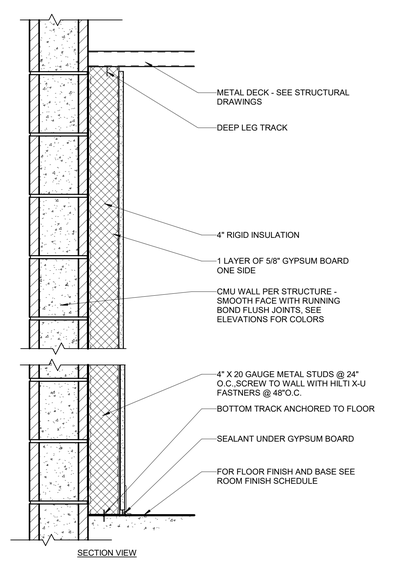

SECTION VIEW

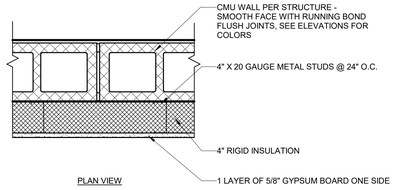

PLAN VIEW

PARTITION TYPE G5

SCALE : 1 1/2" = 1'-0"

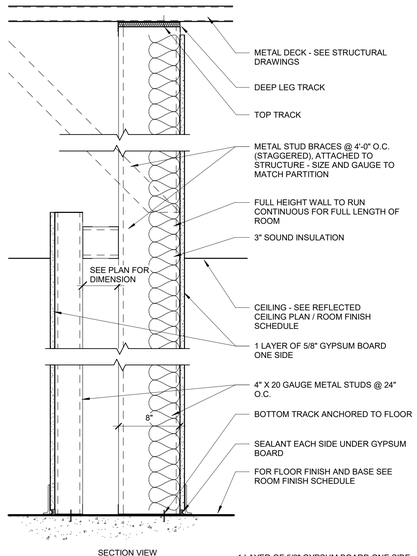

SECTION VIEW

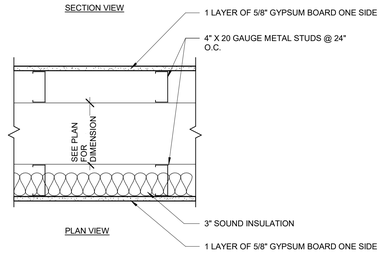

PLAN VIEW

PARTITION TYPE E1

SCALE : 1 1/2" = 1'-0"

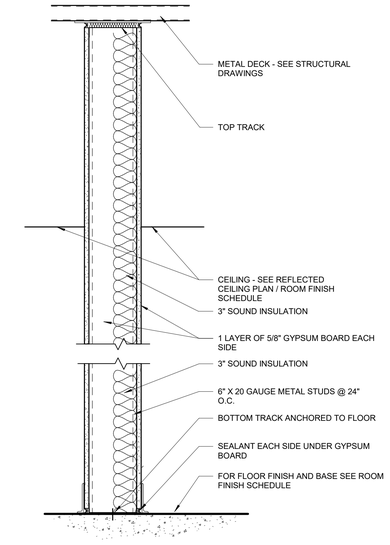

SECTION VIEW

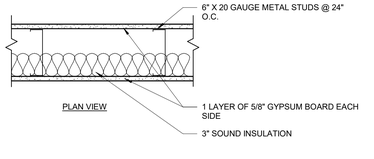

PLAN VIEW

PARTITION TYPE C5

ACOUSTICAL PARTITION

SCALE : 1 1/2" = 1'-0"

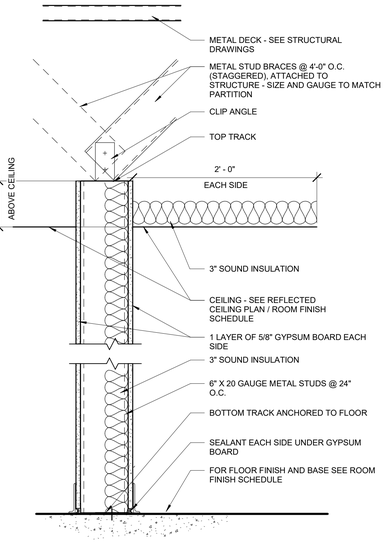

SECTION VIEW

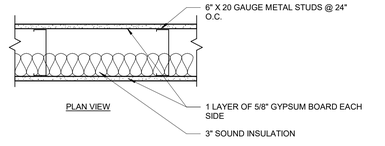

PLAN VIEW

PARTITION TYPE C1

ACOUSTICAL PARTITION

SCALE : 1 1/2" = 1'-0"

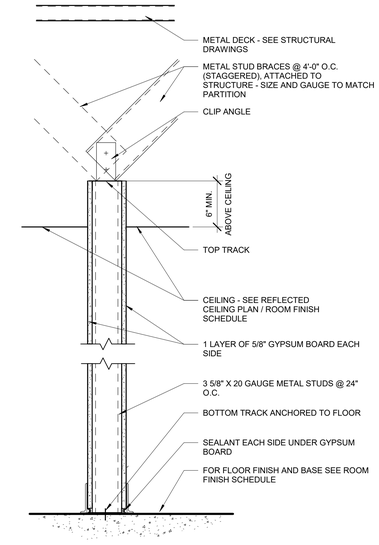

SECTION VIEW

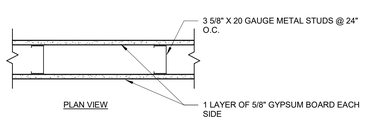

PLAN VIEW

PARTITION TYPE A1

SCALE : 1 1/2" = 1'-0"

tsk
225 South Arlington Avenue
Reno NV, 89501
phone: 775.857.2949
fax: 775.857.2403
www.tska.com

THESE DRAWINGS AND SPECIFICATIONS ARE THE PROPERTY OF TATE SNYDER KIMSEY ARCHITECTS AND MAY NOT BE REPRODUCED OR USED FOR ANY PURPOSE WITHOUT THE ARCHITECTS WRITTEN CONSENT. AS INSTRUMENTS OF SERVICE, THESE DOCUMENTS ARE NOT FINAL AND READY FOR USE, AND THEREFORE NOT VALID, UNLESS THEY ARE SEALED, SIGNED AND DATED.

Copyright, Ltd 2023

Consultant

PLEASE RECYCLE

Project
CITY OF FERNLEY CRRC

Job No: 21-058.00

Owner
CITY OF FERNLEY

50 % CONSTRUCTION DOCUMENTS

REVISIONS		
REV	DATE	DESCRIPTION

Sheet Title
PARTITION TYPES

Date: MARCH 21, 2023

Sheet No:
A2.30

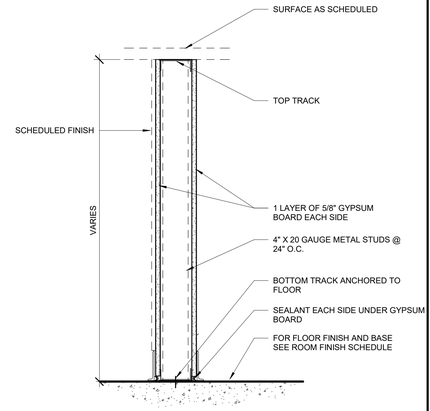

SECTION VIEW

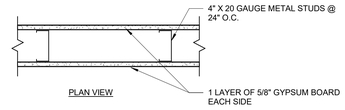

PLAN VIEW

PARTITION TYPE H3

SCALE : 1 1/2" = 1'-0"

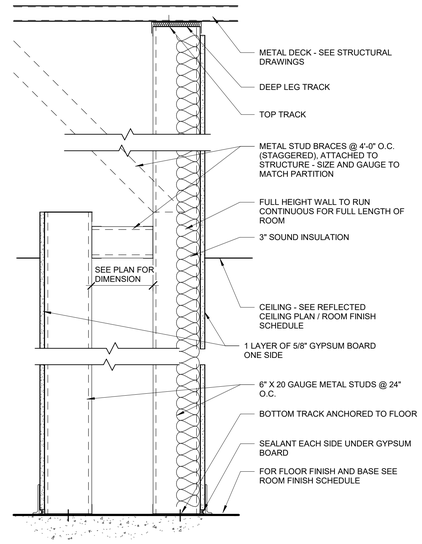

SECTION VIEW

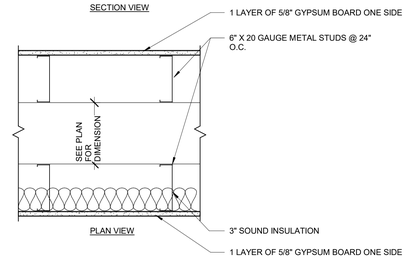

PLAN VIEW

PARTITION TYPE E2

SCALE : 1 1/2" = 1'-0"

tsk
225 South Arlington Avenue
Reno NV, 89501
phone: 775.857.2949
fax: 775.857.2403
www.tska.com

THESE DRAWINGS AND SPECIFICATIONS ARE THE PROPERTY OF TATE SNYDER KIMSEY ARCHITECTS AND MAY NOT BE REPRODUCED OR USED FOR ANY PURPOSE WITHOUT THE ARCHITECTS WRITTEN CONSENT.
AS INSTRUMENTS OF SERVICE, THESE DOCUMENTS ARE NOT FINAL AND READY FOR USE, AND THEREFORE NOT VALID, UNLESS THEY ARE SEALED, SIGNED AND DATED.

Copyright, Ltd 2023

Consultant

PLEASE RECYCLE

Project
CITY OF FERNLEY CRRC

Job No: 21-058.00

Owner
CITY OF FERNLEY

50 % CONSTRUCTION DOCUMENTS

REVISIONS		
REV	DATE	DESCRIPTION

Sheet Title
PARTITION TYPES

Date: MARCH 21, 2023

Sheet No:
A2.31

225 South Arlington Avenue
Reno NV, 89501
phone: 775.857.2949
fax: 775.857.2403
www.tska.com

THESE DRAWINGS AND SPECIFICATIONS ARE THE PROPERTY OF TATE SNYDER KIMSEY ARCHITECTS AND MAY NOT BE REPRODUCED OR USED FOR ANY PURPOSE WITHOUT THE ARCHITECTS WRITTEN CONSENT.
AS INSTRUMENTS OF SERVICE, THESE DOCUMENTS ARE NOT FINAL AND READY FOR USE, AND THEREFORE NOT VALID, UNLESS THEY ARE SEALED, SIGNED AND DATED.

Copyright, Ltd 2023

Consultant

PLEASE RECYCLE

Project
CITY OF FERNLEY CRRC

Job No: 21-058.00

Owner
CITY OF FERNLEY

50 % CONSTRUCTION DOCUMENTS

REVISIONS		
REV	DATE	DESCRIPTION

Sheet Title
WINDOW SCHEDULE - BASE BID, ALT A

Date: MARCH 21, 2023

Sheet No:
A2.40

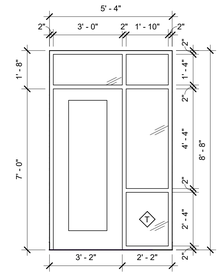

7 TYPE G - BASE BID
SCALE: 3/8" = 1'-0"

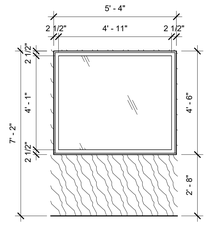

6 TYPE F - BASE BID
SCALE: 3/8" = 1'-0"

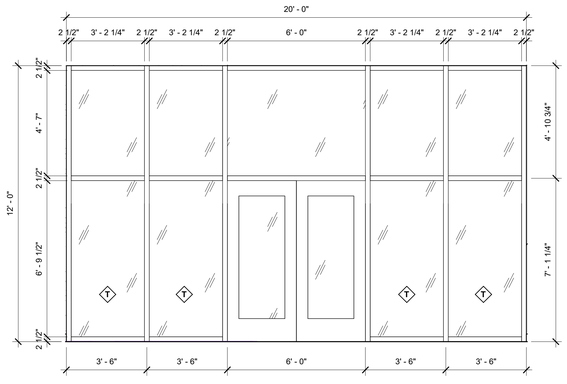

5 TYPE E - BASE BID
SCALE: 3/8" = 1'-0"

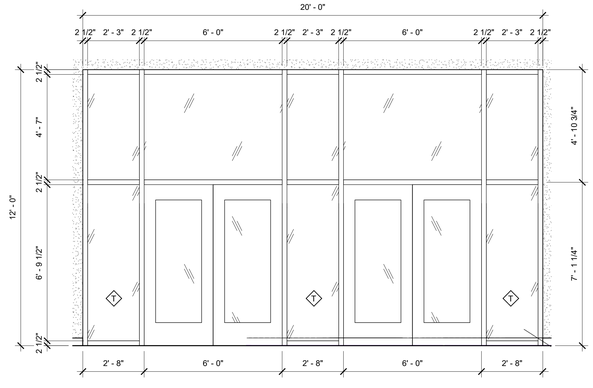

4 TYPE D - BASE BID
SCALE: 3/8" = 1'-0"



3 TYPE C - BASE BID
SCALE: 3/8" = 1'-0"

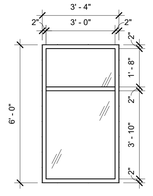

2 TYPE B - BASE BID
SCALE: 3/8" = 1'-0"

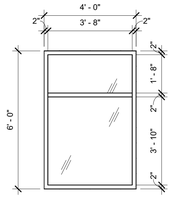

1 TYPE A - BASE BID
SCALE: 3/8" = 1'-0"

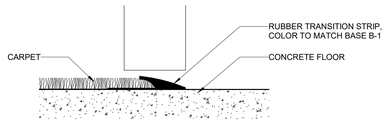

9 CARPET - CONCRETE THRESHOLD
SCALE: 6" = 1'-0"

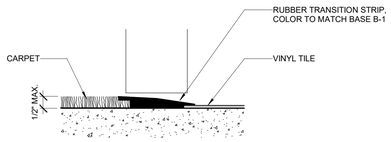

8 CARPET - VCT THRESHOLD
SCALE: 6" = 1'-0"

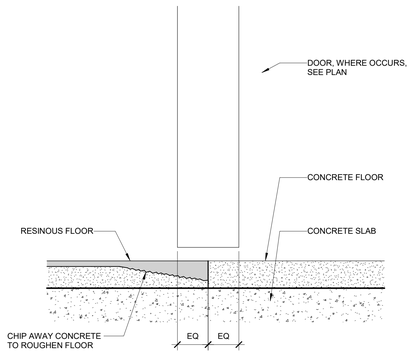

11 RESINOUS FLOOR - CONCRETE THRESHOLD
SCALE: 6" = 1'-0"

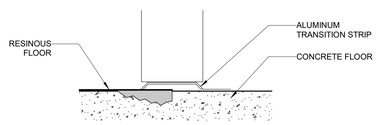

7 RESINOUS FLOOR - CONCRETE THRESHOLD
SCALE: 6" = 1'-0"

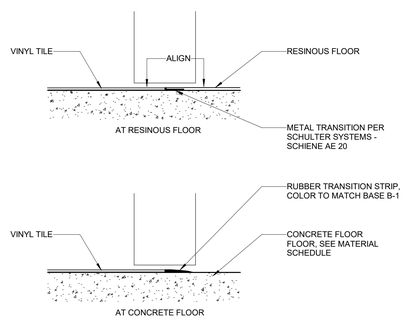

10 VCT - CONC./RESINOUS THRESHOLD
SCALE: 6" = 1'-0"

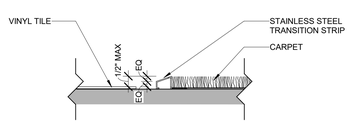

13 VCT - CARPET TRANSITION
SCALE: 6" = 1'-0"

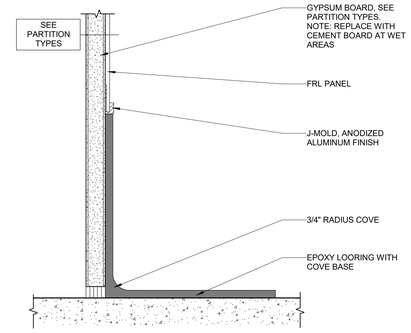

4 RESINOUS BASE DETAIL
SCALE: 6" = 1'-0"

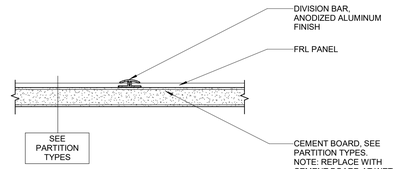

3 FRL PANEL JOINT DETAIL
SCALE: 6" = 1'-0"

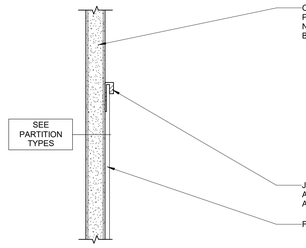

6 FRL PANEL TOP DETAIL
SCALE: 6" = 1'-0"

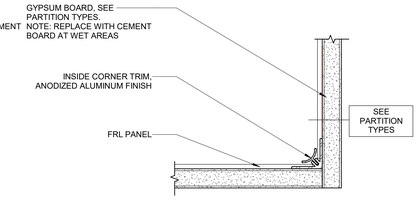

2 FRL PANEL INSIDE CORNER DETAIL
SCALE: 6" = 1'-0"

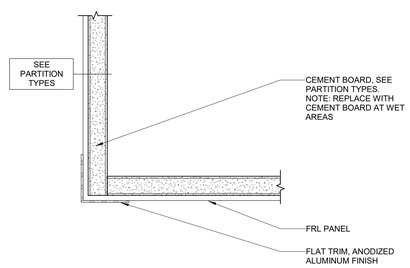

5 FRL OUTSIDE CORNER DETAIL
SCALE: 6" = 1'-0"

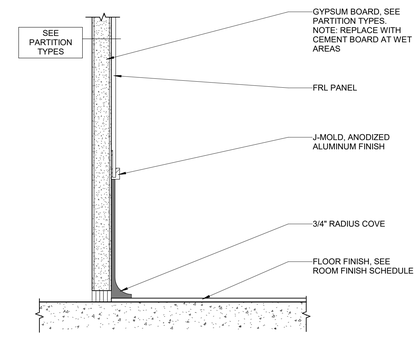

1 RUBBER BASE @ FRL
SCALE: 6" = 1'-0"

tsk
225 South Arlington Avenue
Reno NV, 89501
phone: 775.857.2949
fax: 775.857.2403
www.tska.com

THESE DRAWINGS AND SPECIFICATIONS ARE THE PROPERTY OF TATE SNYDER KIMSEY ARCHITECTS AND MAY NOT BE REPRODUCED OR USED FOR ANY PURPOSE WITHOUT THE ARCHITECTS WRITTEN CONSENT. AS INSTRUMENTS OF SERVICE, THESE DOCUMENTS ARE NOT FINAL AND READY FOR USE, AND THEREFORE NOT VALID, UNLESS THEY ARE SEALED, SIGNED AND DATED.
Copyright, Ltd 2023

Consultant

PLEASE RECYCLE

Project
CITY OF FERNLEY CRRC

Job No: 21-058.00

Owner
CITY OF FERNLEY

50 % CONSTRUCTION DOCUMENTS

REVISIONS		
REV	DATE	DESCRIPTION

Sheet Title
INTERIOR DETAILS

Date: MARCH 21, 2023
Sheet No:
A2.41

225 South Arlington Avenue
Reno NV, 89501
phone: 775.857.2949
fax: 775.857.2403
www.tska.com

THESE DRAWINGS AND SPECIFICATIONS ARE THE PROPERTY OF TATE SNYDER KIMSEY ARCHITECTS AND MAY NOT BE REPRODUCED OR USED FOR ANY PURPOSE WITHOUT THE ARCHITECTS WRITTEN CONSENT.
AS INSTRUMENTS OF SERVICE, THESE DOCUMENTS ARE NOT FINAL AND READY FOR USE, AND THEREFORE NOT VALID, UNLESS THEY ARE SEALED, SIGNED AND DATED.

Copyright, Ltd 2023

Consultant

PLEASE RECYCLE

Project
CITY OF FERNLEY CRRC

Job No: 21-058.00

Owner
CITY OF FERNLEY

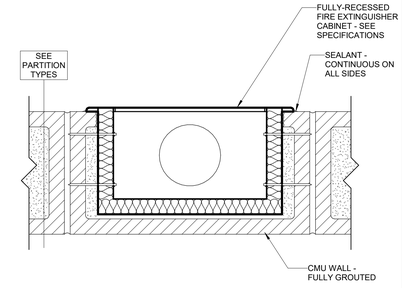

2 FULLY RECESSED FEC - CMU WALL
SCALE: 3" = 1'-0"

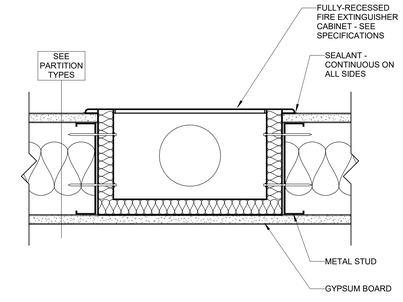

1 FULLY RECESSED FEC - METAL STUD WALL
SCALE: 3" = 1'-0"

50 % CONSTRUCTION DOCUMENTS

REVISIONS		
REV	DATE	DESCRIPTION

Sheet Title
INTERIOR DETAILS

Date: MARCH 21, 2023
Sheet No:
A2.42

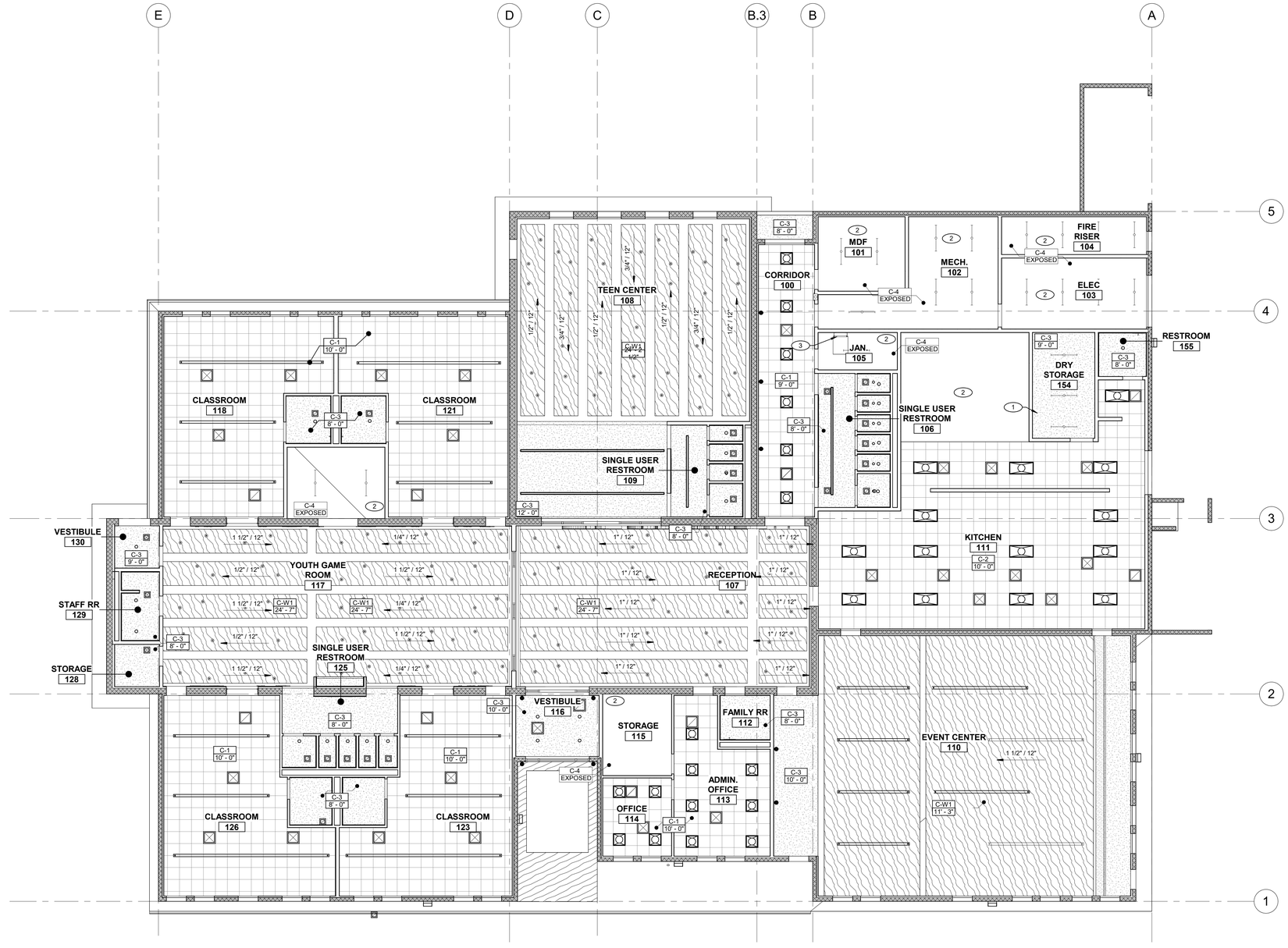

1 REFLECTED CEILING PLAN - BASE BID
SCALE: 1/8" = 1'-0"

NORTH

GENERAL NOTES

1. SEE FINISH SCHEDULE FOR CEILING HEIGHTS AND FINISHES NOT SHOWN ON PLAN.
2. SPRINKLER HEADS TO BE CENTERED IN ALL CORRIDORS AND IN CEILING TILES WHERE TILES OCCUR.
3. MAINTAIN MINIMUM 3" CLEAR BETWEEN LIGHTS, DIFFUSERS, SPEAKERS, ETC.
4. CEILING/SOFFITS ELEVATIONS ARE BASED FROM FINISH FLOOR ELEVATIONS.
5. SEE FINISH SCHEDULE FOR EXPOSED STRUCTURE TO BE PAINTED.

KEYNOTES

1. PAINTED GYP. BD. CEILING, SEE ROOM FINISH SCHEDULE.
2. PAINTED STRUCTURAL FRAMING, SEE STRUCTURAL DWGS.
3. ROOF ACCESS LADDER, SEE ROOF DETAILS

LEGEND

- GYP — FINISH TAG
- ACT 12' - 0" — CEILING TAG
- 24" x 24" ACOUSTIC CEILING TILE
- 24" x 48" ACOUSTIC CEILING TILE
- WOOD CEILING
- FRAMED GYPSUM BOARD CEILING, SEE FINISH SCHEDULE
- EXPOSED STRUCTURE. SEE STRUCTURAL DETAILS.
- DIFUSER
- RETURN
- LIGHT FIXTURE
- LINEAR LIGHT FIXTURE
- SCONCE

tsk
225 South Arlington Avenue
Reno NV, 89501
phone: 775.857.2949
fax: 775.857.2403
www.tska.com

THESE DRAWINGS AND SPECIFICATIONS ARE THE PROPERTY OF TATE SNYDER KIMSEY ARCHITECTS AND MAY NOT BE REPRODUCED OR USED FOR ANY PURPOSE WITHOUT THE ARCHITECTS WRITTEN CONSENT.
AS INSTRUMENTS OF SERVICE, THESE DOCUMENTS ARE NOT FINAL AND READY FOR USE, AND THEREFORE NOT VALID, UNLESS THEY ARE SEALED, SIGNED AND DATED.
Copyright, Ltd 2023

Consultant

PLEASE RECYCLE

Project
CITY OF FERNLEY CRRC

Job No: 21-058.00

Owner
CITY OF FERNLEY

50 % CONSTRUCTION DOCUMENTS

REVISIONS		
REV	DATE	DESCRIPTION

Sheet Title
REFLECTED CEILING PLAN - BASE BID

Date: MARCH 21, 2023
Sheet No:
A3.01

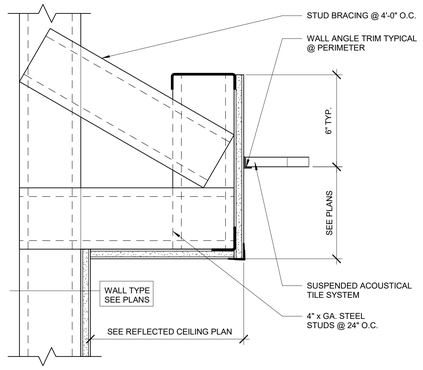

11 GYPSUM BOARD SOFFIT
SCALE: 3" = 1'-0"

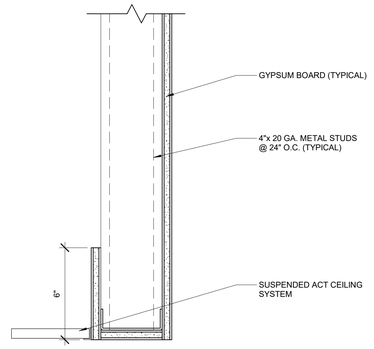

7 ACT CEILING TRANSITION
SCALE: 3" = 1'-0"

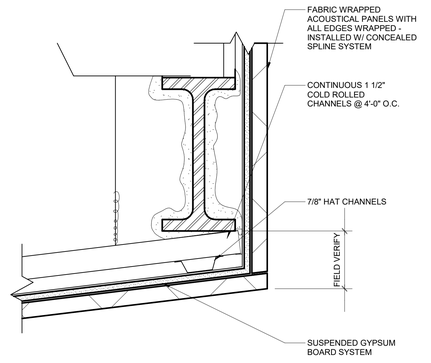

3 ACOUSTIC PANEL DETAIL
SCALE: 3" = 1'-0"

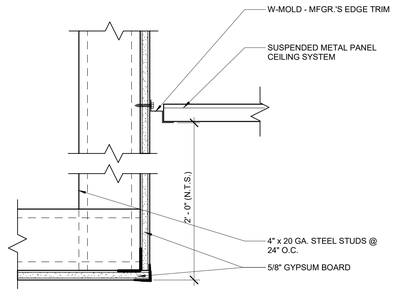

10 MTL. PANEL CEILING @ GYP. BD. SOFFIT
SCALE: 3" = 1'-0"

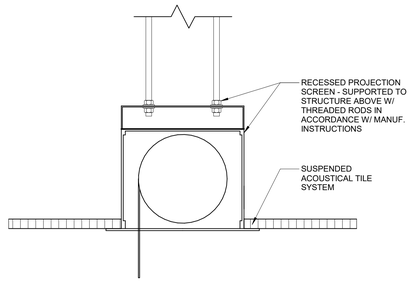

6 RECESSED PROJECTION SCREEN
SCALE: 3" = 1'-0"

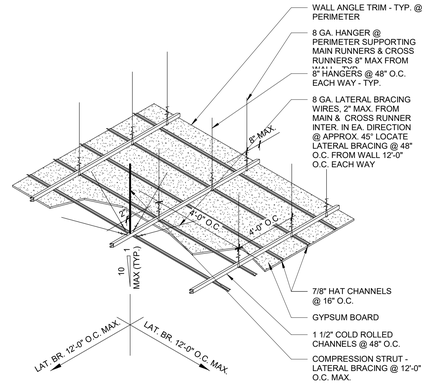

2a SUSPENDED GYPSUM BOARD CEILING
SCALE: 3" = 1'-0"

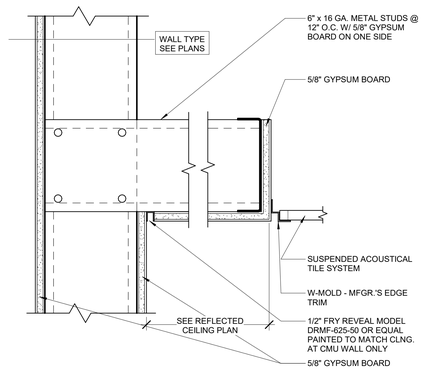

13 SOFFIT DETAIL
SCALE: 3" = 1'-0"

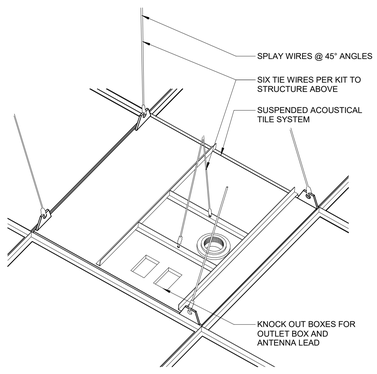

5 PROJECTION MOUNTING KIT
SCALE: 3" = 1'-0"

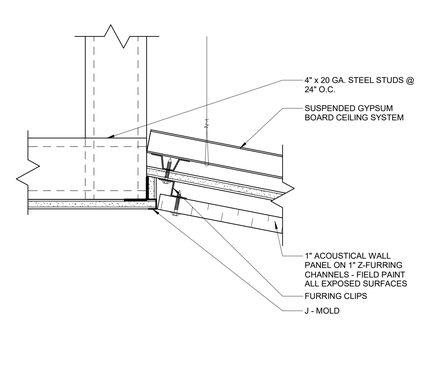

2 ACOUSTICAL PANEL CEILING DETAIL
SCALE: 3" = 1'-0"

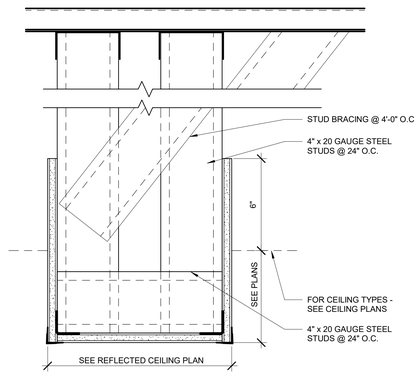

12 GYPSUM BOARD SOFFIT
SCALE: 3" = 1'-0"

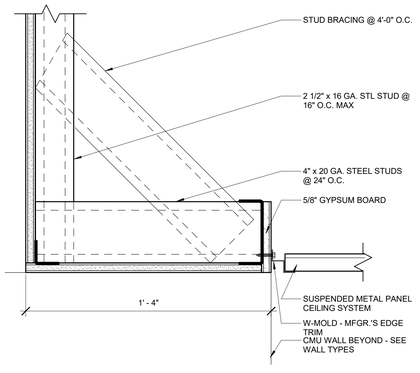

9 MTL. PANEL CEILING @ GYP. BD. SOFFIT
SCALE: 3" = 1'-0"

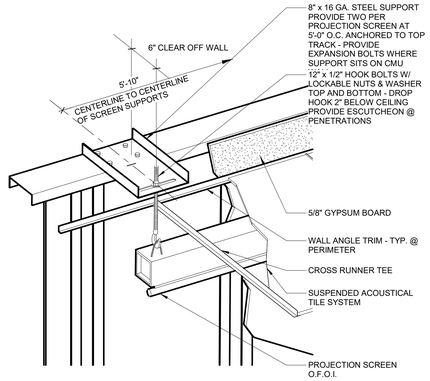

4 PROJECTION SCREEN MOUNT
SCALE: 3" = 1'-0"

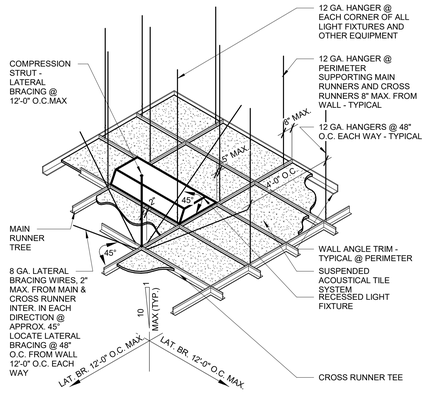

1 ACOUSTICAL TILE CEILING SYSTEM
SCALE: 3" = 1'-0"

tsk
225 South Arlington Avenue
Reno NV, 89501
phone: 775.857.2949
fax: 775.857.2403
www.tska.com

THESE DRAWINGS AND SPECIFICATIONS ARE THE PROPERTY OF TATE SNYDER KIMSEY ARCHITECTS AND MAY NOT BE REPRODUCED OR USED FOR ANY PURPOSE WITHOUT THE ARCHITECTS WRITTEN CONSENT. AS INSTRUMENTS OF SERVICE, THESE DOCUMENTS ARE NOT FINAL AND READY FOR USE, AND THEREFORE NOT VALID, UNLESS THEY ARE SEALED, SIGNED AND DATED.
Copyright, Ltd 2023

Consultant

PLEASE RECYCLE

Project
CITY OF FERNLEY CRRC

Job No: 21-058.00

Owner
CITY OF FERNLEY

50 % CONSTRUCTION DOCUMENTS

REVISIONS		
REV	DATE	DESCRIPTION

Sheet Title
CEILING DETAILS

Date: MARCH 21, 2023
Sheet No:
A3.30

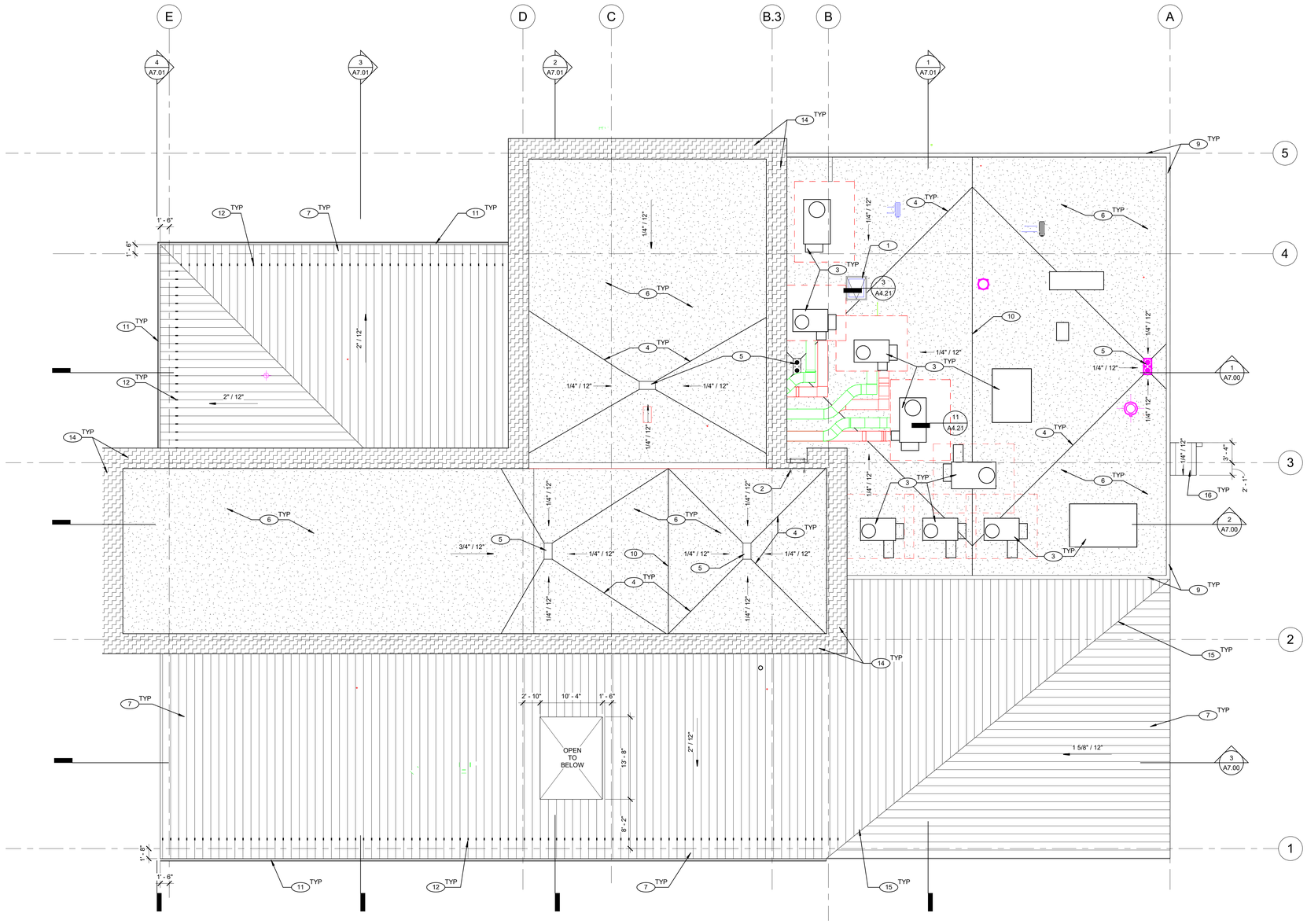

1 ROOF PLAN - BASE BID
SCALE: 1/8" = 1'-0"

NORTH

GENERAL NOTES

KEYNOTES

1	ROOF HATCH, SEE 1/A4.21
2	ROOF CROSSOVER LADDER, SEE ROOF DETAILS.
3	MECHANICAL UNITS & CURBS, SEE MECH. DWGS.
4	ROOF CRICKETS, SEE ROOF DETAILS
5	ROOF DRAINS, SEE ROOF DETAILS
6	TPO ROOFING WITH 5" ROOF INSULATION. SEE ROOF DWGS.
7	STANDING SEAM & INSULATION. SEE ROOF PLANS.
8	CMU VENEER ROOF SOFFIT, SEE ROOF DETAILS.
9	PRECAST CONCRETE PARAPET CAP. SEE ROOF DETAILS.
10	ROOF RIDIGLINE
11	METAL GUTTER W/ SLOPE TO DRAIN PIPES.
12	SNOW/ICE GUARD. SEE SPECIFICATIONS.
13	STANDING SEAM ROOF. SEE ROOF PLANS.
14	METAL PANEL ROOF SOFFIT, SEE ROOF DETAILS.
15	STANDING SEAM VALLEY, SEE ROOF DETAILS.
16	STANDING SEAM O/TRASH CAN WASH. SEE ROOF DETAILS

LEGEND

tsk
225 South Arlington Avenue
Reno NV, 89501
phone: 775.857.2949
fax: 775.857.2403
www.tska.com

THESE DRAWINGS AND SPECIFICATIONS ARE THE PROPERTY OF TATE SNYDER KIMSEY ARCHITECTS AND MAY NOT BE REPRODUCED OR USED FOR ANY PURPOSE WITHOUT THE ARCHITECTS WRITTEN CONSENT.
AS INSTRUMENTS OF SERVICE, THESE DOCUMENTS ARE NOT FINAL AND READY FOR USE, AND THEREFORE NOT VALID, UNLESS THEY ARE SEALED, SIGNED AND DATED.

Copyright, Ltd 2023

Consultant

PLEASE RECYCLE

Project
CITY OF FERNLEY CRRC

Job No: 21-058.00

Owner
CITY OF FERNLEY

50 % CONSTRUCTION DOCUMENTS

REVISIONS		
REV	DATE	DESCRIPTION

Sheet Title
ROOF PLAN - BASE BID

Date: MARCH 21, 2023
Sheet No:

A4.01

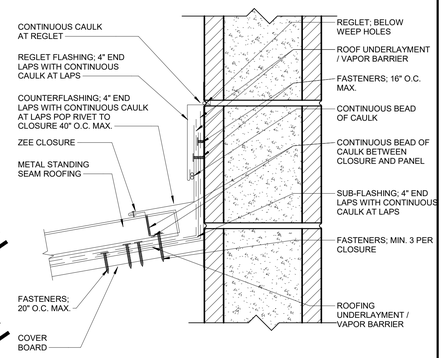

UPDATE

UPDATE

4 RAKE WALL WITH REGLET
SCALE: 3" = 1'-0"

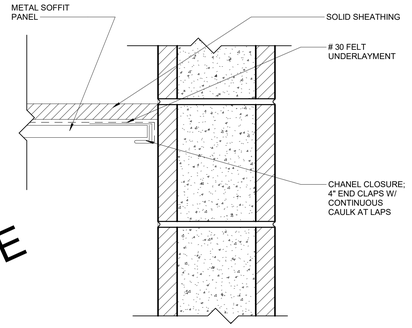

UPDATE

7 METAL ROOFING SOFFIT
SCALE: 3" = 1'-0"

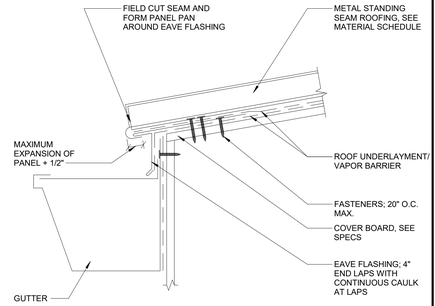

3 METAL ROOFING EAVE W/ GUTTER
SCALE: 3" = 1'-0"

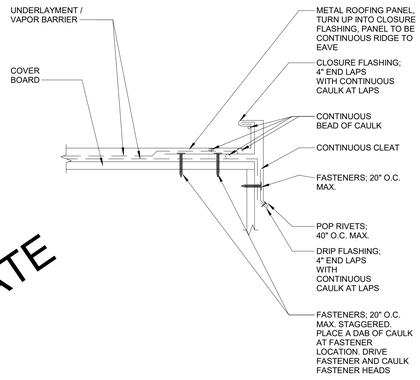

UPDATE

6 METAL ROOFING GABLE DETAIL
SCALE: 3" = 1'-0"

NOTE: ALL INSULATION JOINTS MUST OCCUR OVER BEARING SURFACE OF METAL DECK.

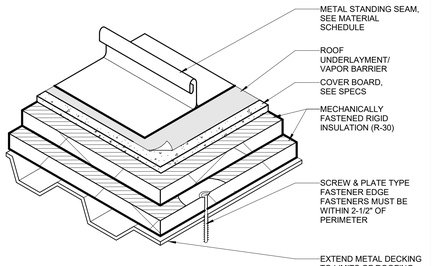

2 ROOF TYPE B
SCALE: 3" = 1'-0"

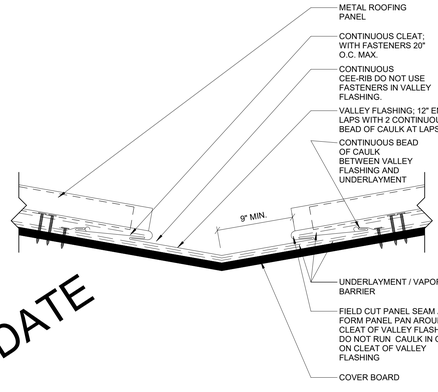

UPDATE

5 METAL ROOF VALLEY
SCALE: 3" = 1'-0"

NOTE: ALL INSULATION JOINTS MUST OCCUR OVER BEARING SURFACE OF METAL DECK.

UPDATE

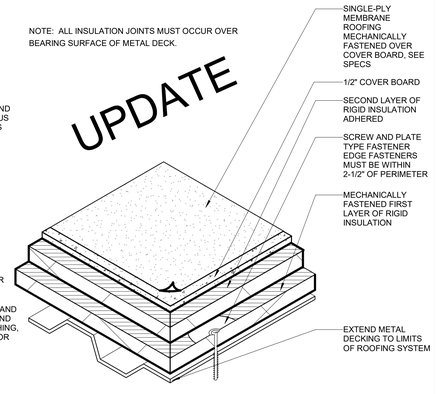

1 ROOF TYPE A
SCALE: 3" = 1'-0"

tsk
225 South Arlington Avenue
Reno NV, 89501
phone: 775.857.2949
fax: 775.857.2403
www.tska.com

THESE DRAWINGS AND SPECIFICATIONS ARE THE PROPERTY OF TATE SNYDER KIMSEY ARCHITECTS AND MAY NOT BE REPRODUCED OR USED FOR ANY PURPOSE WITHOUT THE ARCHITECTS WRITTEN CONSENT. AS INSTRUMENTS OF SERVICE, THESE DOCUMENTS ARE NOT FINAL AND READY FOR USE, AND THEREFORE NOT VALID, UNLESS THEY ARE SEALED, SIGNED AND DATED.
Copyright, Ltd 2023

Consultant

PLEASE RECYCLE

Project
CITY OF FERNLEY CRRC

Job No: 21-058.00

Owner
CITY OF FERNLEY

50 % CONSTRUCTION DOCUMENTS

REVISIONS		
REV	DATE	DESCRIPTION

Sheet Title
ROOF TYPE DETAILS

Date: MARCH 21, 2023
Sheet No:
A4.20

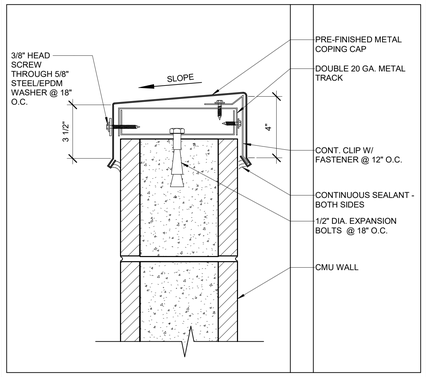

20 COPING @ CMU WALL
SCALE: 3" = 1'-0"

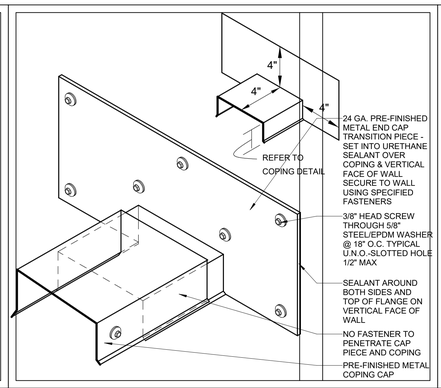

16 END CAP TRANSITION PIECE
SCALE: 3" = 1'-0"

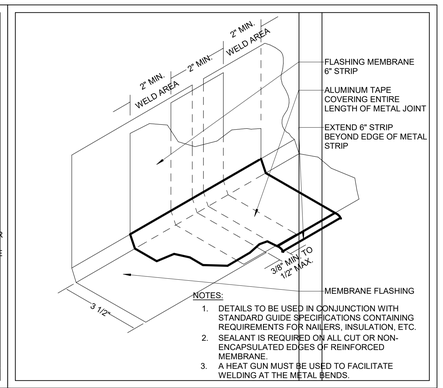

12 FLASHING DETAIL
SCALE: 3" = 1'-0"

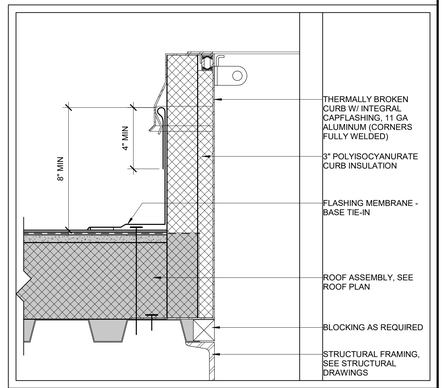

4 TYPICAL CURB FLASHING @ ROOF HATCH
SCALE: 3" = 1'-0"

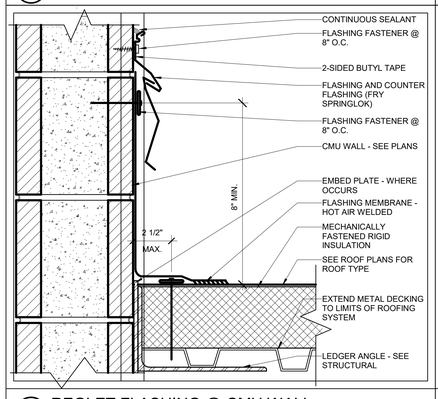

19 REGLET FLASHING @ CMU WALL
SCALE: 3" = 1'-0"

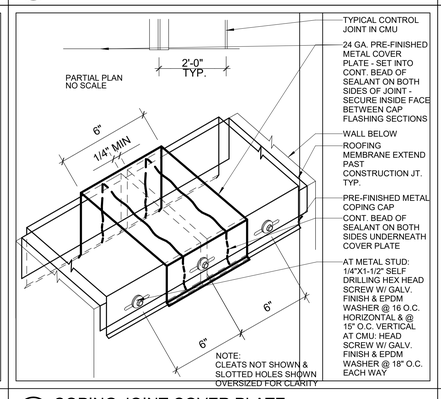

15 COPING JOINT COVER PLATE
SCALE: 3" = 1'-0"

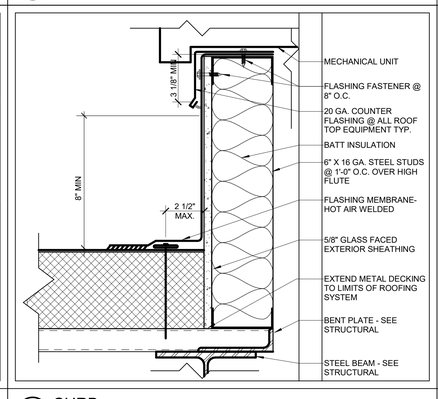

11 CURB
SCALE: 3" = 1'-0"

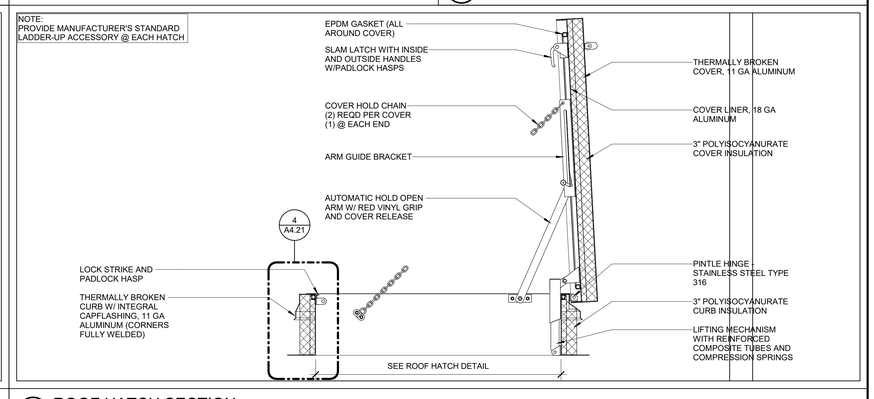

3 ROOF HATCH SECTION
SCALE: 1" = 1'-0"

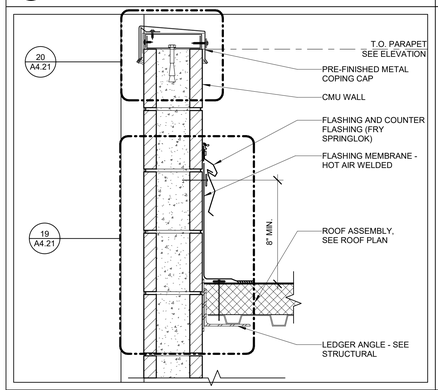

18 CMU PARAPET DETAIL
SCALE: 1 1/2" = 1'-0"

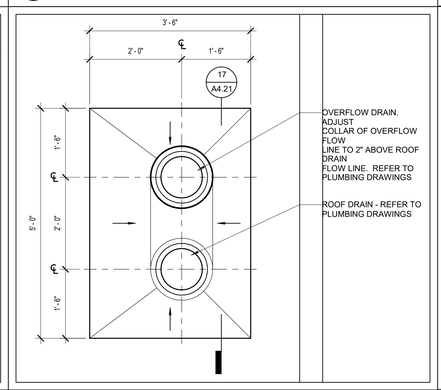

14 RD/OD PLAN VIEW
SCALE: 3/4" = 1'-0"

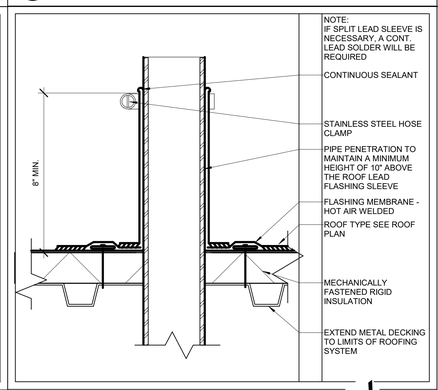

10 TYPICAL PIPE PENETRATION
SCALE: 3" = 1'-0"

MODIFY

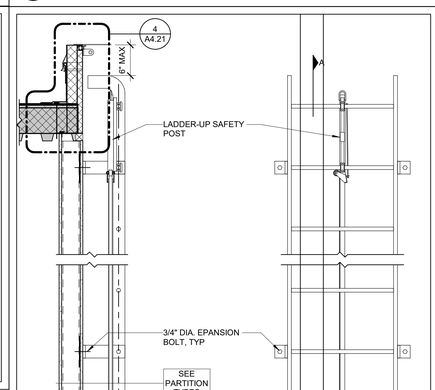

5 ROOF ACCESS LADDER @ HATCH
SCALE: 1" = 1'-0"

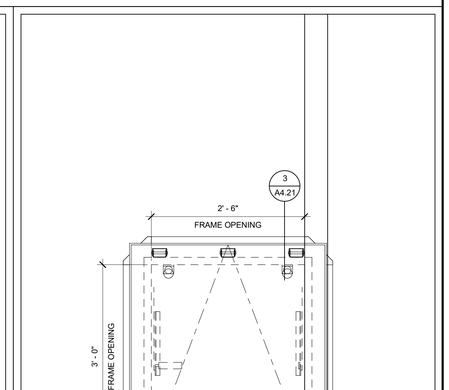

1 ROOF HATCH
SCALE: 1" = 1'-0"

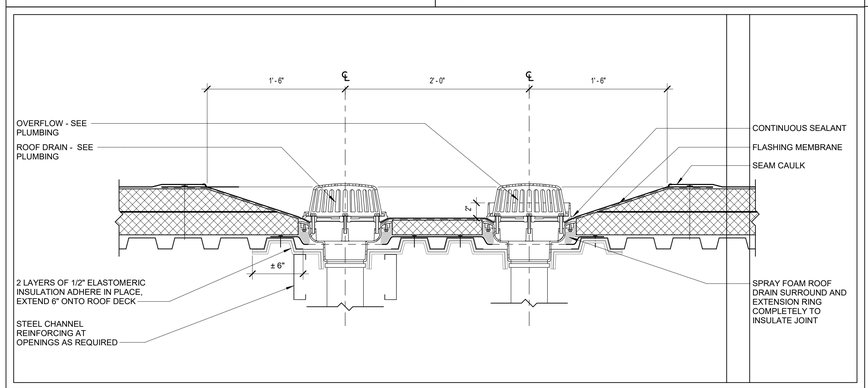

17 RD/OD SECTION
SCALE: 1 1/2" = 1'-0"

tsk
225 South Arlington Avenue
Reno NV, 89501
phone: 775.857.2949
fax: 775.857.2403
www.tska.com

THESE DRAWINGS AND SPECIFICATIONS ARE THE PROPERTY OF TATE SNYDER KIMSEY ARCHITECTS AND MAY NOT BE REPRODUCED OR USED FOR ANY PURPOSE WITHOUT THE ARCHITECTS WRITTEN CONSENT. AS INSTRUMENTS OF SERVICE, THESE DOCUMENTS ARE NOT FINAL AND READY FOR USE, AND THEREFORE NOT VALID, UNLESS THEY ARE SEALED, SIGNED AND DATED.
Copyright, Ltd 2023

Consultant

PLEASE RECYCLE

Project
CITY OF FERNLEY CRRC

Job No: 21-058.00

Owner
CITY OF FERNLEY

50 % CONSTRUCTION DOCUMENTS

REVISIONS		
REV	DATE	DESCRIPTION

Sheet Title
ROOF DETAILS

Date: MARCH 21, 2023
Sheet No:
A4.21

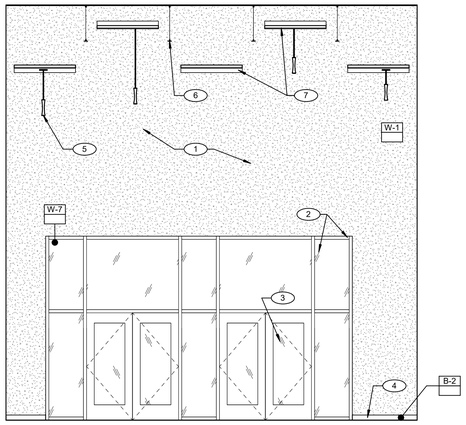

4 MAIN LOBBY 107 WEST
SCALE: 1/4" = 1'-0"

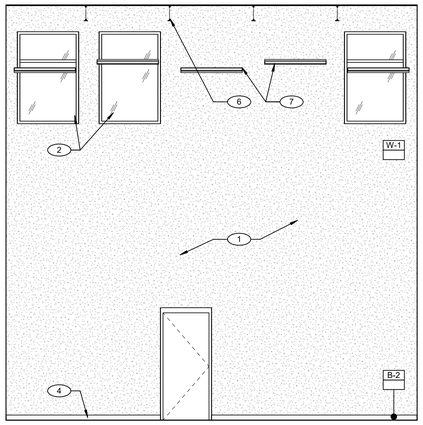

2 MAIN LOBBY 107 EAST
SCALE: 1/4" = 1'-0"

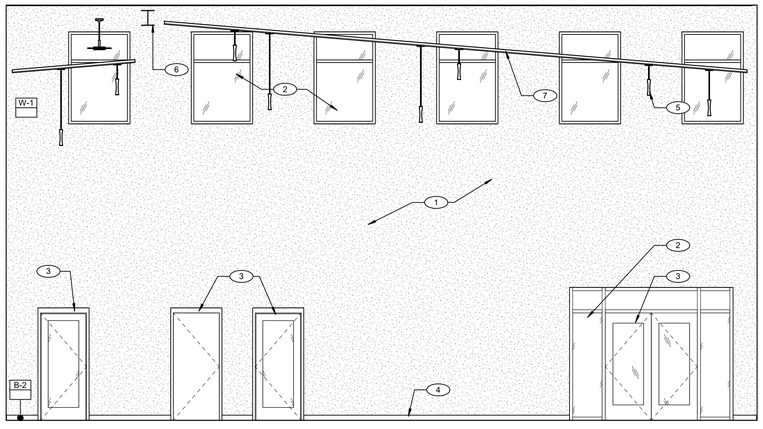

3 MAIN LOBBY 107 SOUTH
SCALE: 1/4" = 1'-0"

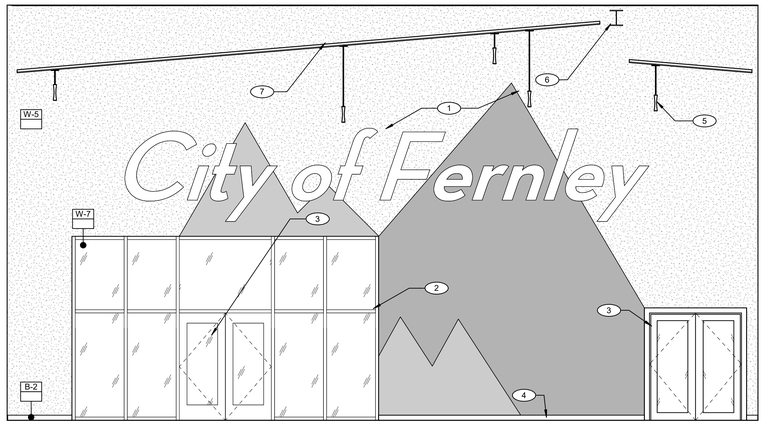

1 MAIN LOBBY 107 NORTH
SCALE: 1/4" = 1'-0"

GENERAL NOTES

KEYNOTES

1	PAINTED GYP. BD., SEE FINISH SCHEDULE.
2	WINDOW SYSTEM, SEE WINDOW SCHEDULE.
3	DOOR AND FRAME, SEE DOOR SCHEDULE.
4	WOOD BASE, SEE FINISH SCHEDULE.
5	LIGHT FIXTURE, SEE ELECTRICAL DWGS.
6	PAINTED STRUCTURAL FRAMING, SEE STRUCTURAL DWGS.
7	WOOD CEILING SYSTEM. SEE CEILING AND ROOM FINISH SCHEDULE.
8	RUBBER BASE, SEE FINISH SCHEDULE.
9	CASEWORK AND COUNTERTOP, SEE CASEWORK DETAILS.
10	ADA DRINKING FOUNTAIN AND WATER BOTTLE FILLER.
11	TILE WALL, SEE ROOM FINISH SCHEDULE.
12	PAINTED CMU WALL, SEE ROOM FINISH SCHEDULE.
13	DISPLAY CASEWORK
14	FIRE EXTINGUISHER & CABINET.
15	WASHER & DRYER,OFCI.
16	TWO STATION LAVATORY
17	ROOF ACCESS LADDER, SEE ROOF DETAILS
18	EXPOSED STEEL COLUMN, SEE STRUCT. DWGS.
19	ROOF TRUSS FRAMING, SEE STRUCT. DWGS.
20	GYM WALL PADDING.

tsk
225 South Arlington Avenue
Reno NV, 89501
phone: 775.857.2949
fax: 775.857.2403
www.tska.com

THESE DRAWINGS AND SPECIFICATIONS ARE THE PROPERTY OF TATE SNYDER KIMSEY ARCHITECTS AND MAY NOT BE REPRODUCED OR USED FOR ANY PURPOSE WITHOUT THE ARCHITECTS WRITTEN CONSENT.
AS INSTRUMENTS OF SERVICE, THESE DOCUMENTS ARE NOT FINAL AND READY FOR USE, AND THEREFORE NOT VALID, UNLESS THEY ARE SEALED, SIGNED AND DATED.
Copyright, Ltd 2023

Consultant

PLEASE RECYCLE

Project
CITY OF FERNLEY CRRC

Job No: 21-058.00

Owner
CITY OF FERNLEY

50 % CONSTRUCTION DOCUMENTS

REVISIONS		
REV	DATE	DESCRIPTION

Sheet Title
INTERIOR ELEVATIONS

Date: MARCH 21, 2023
Sheet No:
A5.00

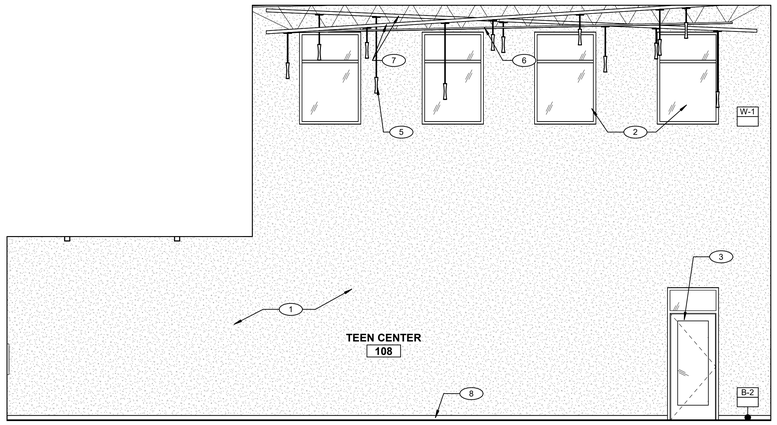

4 TEEN CENTER 108 WEST
SCALE: 1/4" = 1'-0"

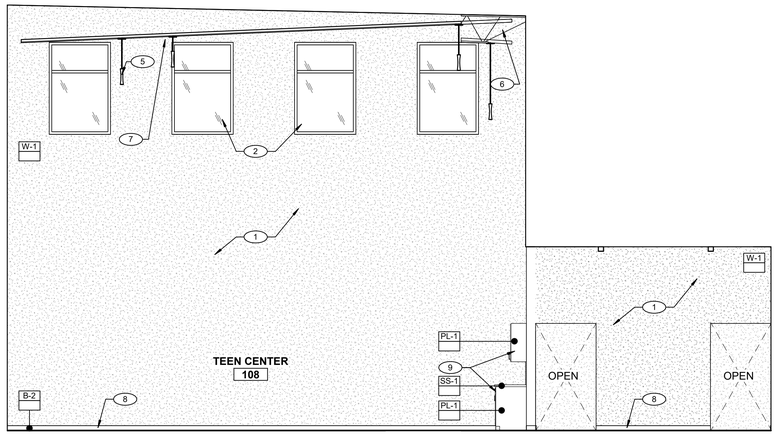

2 TEEN CENTER 108 EAST
SCALE: 1/4" = 1'-0"

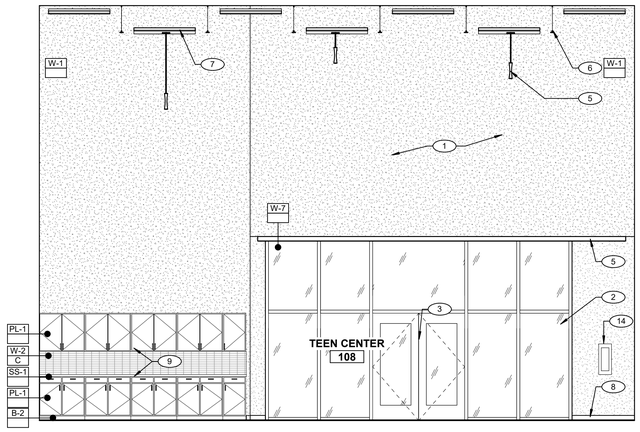

3 TEEN CENTER 108 SOUTH
SCALE: 1/4" = 1'-0"

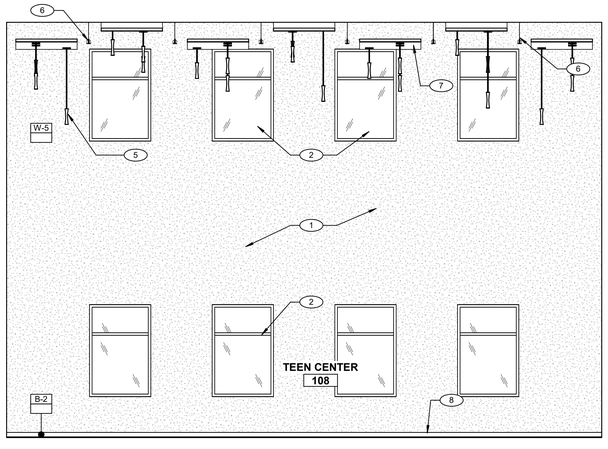

1 TEEN CENTER 108 NORTH
SCALE: 1/4" = 1'-0"

GENERAL NOTES

KEYNOTES

1	PAINTED GYP. BD., SEE FINISH SCHEDULE.
2	WINDOW SYSTEM, SEE WINDOW SCHEDULE.
3	DOOR AND FRAME, SEE DOOR SCHEDULE.
4	WOOD BASE, SEE FINISH SCHEDULE.
5	LIGHT FIXTURE, SEE ELECTRICAL DWGS.
6	PAINTED STRUCTURAL FRAMING, SEE STRUCTURAL DWGS.
7	WOOD CEILING SYSTEM, SEE CEILING AND ROOM FINISH SCHEDULE.
8	RUBBER BASE, SEE FINISH SCHEDULE.
9	CASEWORK AND COUNTERTOP, SEE CASEWORK DETAILS.
10	ADA DRINKING FOUNTAIN AND WATER BOTTLE FILLER.
11	TILE WALL, SEE ROOM FINISH SCHEDULE.
12	PAINTED CMU WALL, SEE ROOM FINISH SCHEDULE.
13	DISPLAY CASEWORK
14	FIRE EXTINGUISHER & CABINET.
15	WASHER & DRYER,OFCI.
16	TWO STATION LAVATORY
17	ROOF ACCESS LADDER, SEE ROOF DETAILS
18	EXPOSED STEEL COLUMN, SEE STRUCT. DWGS.
19	ROOF TRUSS FRAMING, SEE STRUCT. DWGS.
20	GYM WALL PADDING.

tsk
225 South Arlington Avenue
Reno NV, 89501
phone: 775.857.2949
fax: 775.857.2403
www.tska.com

THESE DRAWINGS AND SPECIFICATIONS ARE THE PROPERTY OF TATE SNYDER KIMSEY ARCHITECTS AND MAY NOT BE REPRODUCED OR USED FOR ANY PURPOSE WITHOUT THE ARCHITECTS WRITTEN CONSENT. AS INSTRUMENTS OF SERVICE, THESE DOCUMENTS ARE NOT FINAL AND READY FOR USE, AND THEREFORE NOT VALID, UNLESS THEY ARE SEALED, SIGNED AND DATED.
Copyright, Ltd 2023

Consultant

PLEASE RECYCLE

Project
CITY OF FERNLEY CRRC

Job No: 21-058.00

Owner
CITY OF FERNLEY

50 % CONSTRUCTION DOCUMENTS

REVISIONS		
REV	DATE	DESCRIPTION

Sheet Title
INTERIOR ELEVATIONS

Date: MARCH 21, 2023
Sheet No:
A5.01

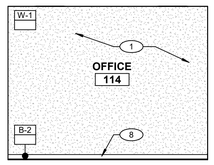

12 OFFICE 114 WEST
SCALE: 1/4" = 1'-0"

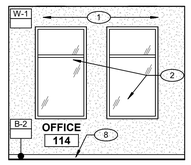

11 OFFICE 114 SOUTH
SCALE: 1/4" = 1'-0"

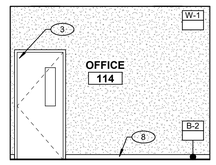

10 OFFICE 114 EAST
SCALE: 1/4" = 1'-0"

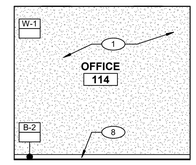

9 OFFICE 114 NORTH
SCALE: 1/4" = 1'-0"

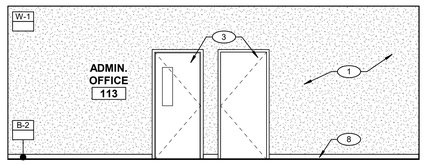

8 ADMIN OFFICE 113 WEST
SCALE: 1/4" = 1'-0"

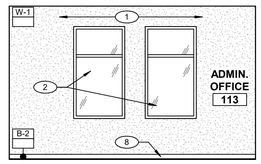

7 ADMIN OFFICE 113 SOUTH
SCALE: 1/4" = 1'-0"

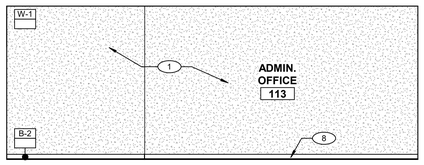

6 ADMIN OFFICE 113 EAST
SCALE: 1/4" = 1'-0"

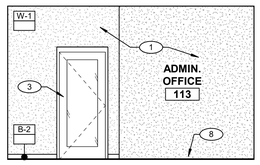

5 ADMIN OFFICE 113 NORTH
SCALE: 1/4" = 1'-0"

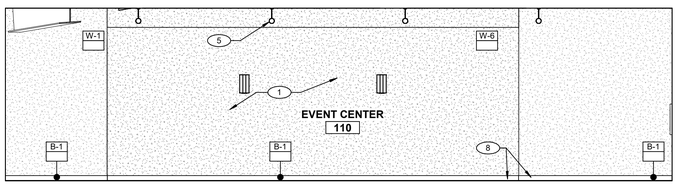

4 CAFETERIA 110 WEST
SCALE: 1/4" = 1'-0"

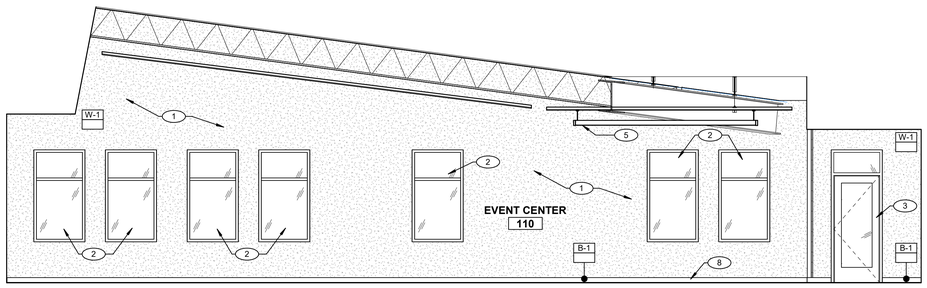

3 CAFETERIA 110 SOUTH
SCALE: 1/4" = 1'-0"

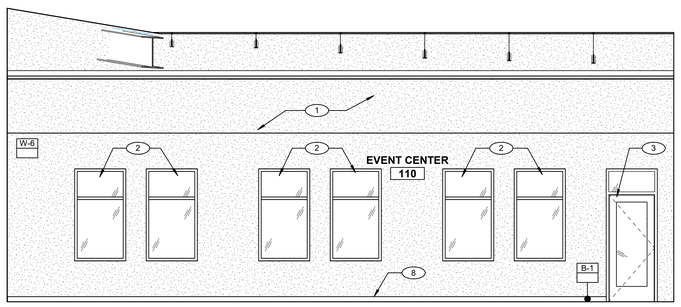

2 CAFETERIA 110 EAST
SCALE: 1/4" = 1'-0"

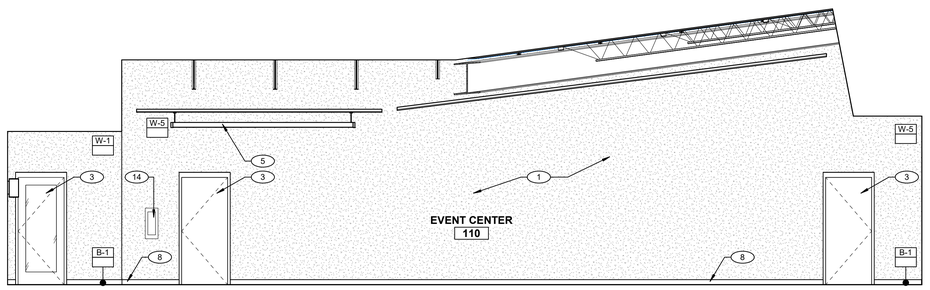

1 CAFETERIA 110 NORTH
SCALE: 1/4" = 1'-0"

GENERAL NOTES

KEYNOTES

1	PAINTED GYP. BD., SEE FINISH SCHEDULE.
2	WINDOW SYSTEM, SEE WINDOW SCHEDULE.
3	DOOR AND FRAME, SEE DOOR SCHEDULE.
4	WOOD BASE, SEE FINISH SCHEDULE.
5	LIGHT FIXTURE, SEE ELECTRICAL DWGS.
6	PAINTED STRUCTURAL FRAMING, SEE STRUCTURAL DWGS.
7	WOOD CEILING SYSTEM, SEE CEILING AND ROOM FINISH SCHEDULE.
8	RUBBER BASE, SEE FINISH SCHEDULE.
9	CASEWORK AND COUNTERTOP, SEE CASEWORK DETAILS.
10	ADA DRINKING FOUNTAIN AND WATER BOTTLE FILLER.
11	TILE WALL, SEE ROOM FINISH SCHEDULE.
12	PAINTED CMU WALL, SEE ROOM FINISH SCHEDULE.
13	DISPLAY CASEWORK.
14	FIRE EXTINGUISHER & CABINET.
15	WASHER & DRYER,OFCI.
16	TWO STATION LAVATORY
17	ROOF ACCESS LADDER, SEE ROOF DETAILS
18	EXPOSED STEEL COLUMN, SEE STRUCT. DWGS.
19	ROOF TRUSS FRAMING, SEE STRUCT. DWGS.
20	GYM WALL PADDING.

tsk
225 South Arlington Avenue
Reno NV, 89501
phone: 775.857.2949
fax: 775.857.2403
www.tska.com

THESE DRAWINGS AND SPECIFICATIONS ARE THE PROPERTY OF TATE SNYDER KIMSEY ARCHITECTS AND MAY NOT BE REPRODUCED OR USED FOR ANY PURPOSE WITHOUT THE ARCHITECTS WRITTEN CONSENT.
AS INSTRUMENTS OF SERVICE, THESE DOCUMENTS ARE NOT FINAL AND READY FOR USE, AND THEREFORE NOT VALID, UNLESS THEY ARE SEALED, SIGNED AND DATED.
Copyright, Ltd 2023

Consultant

PLEASE RECYCLE

Project
CITY OF FERNLEY CRRC

Job No: 21-058.00

Owner
CITY OF FERNLEY

50 % CONSTRUCTION DOCUMENTS

REVISIONS		
REV	DATE	DESCRIPTION

Sheet Title
INTERIOR ELEVATIONS

Date: MARCH 21, 2023
Sheet No:
A5.02

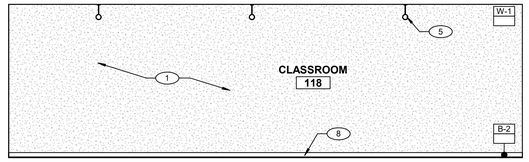

8 CLASSROOM 118 WEST
SCALE: 1/4" = 1'-0"

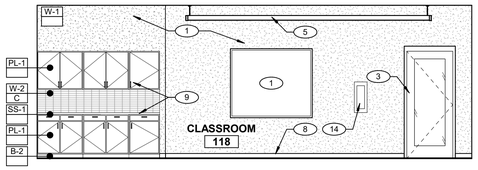

7 CLASSROOM 118 SOUTH
SCALE: 1/4" = 1'-0"

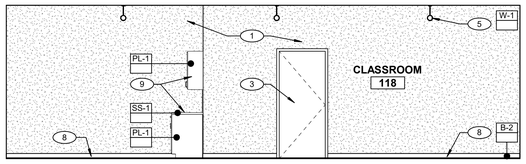

6 CLASSROOM 118 EAST
SCALE: 1/4" = 1'-0"

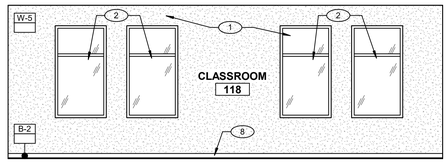

5 CLASSROOM 118 NORTH
SCALE: 1/4" = 1'-0"

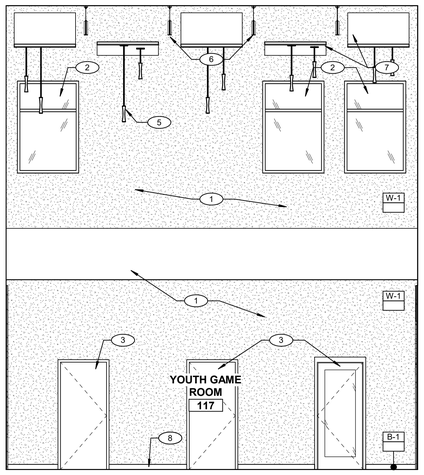

4 YOUTH GR 117 WEST
SCALE: 1/4" = 1'-0"

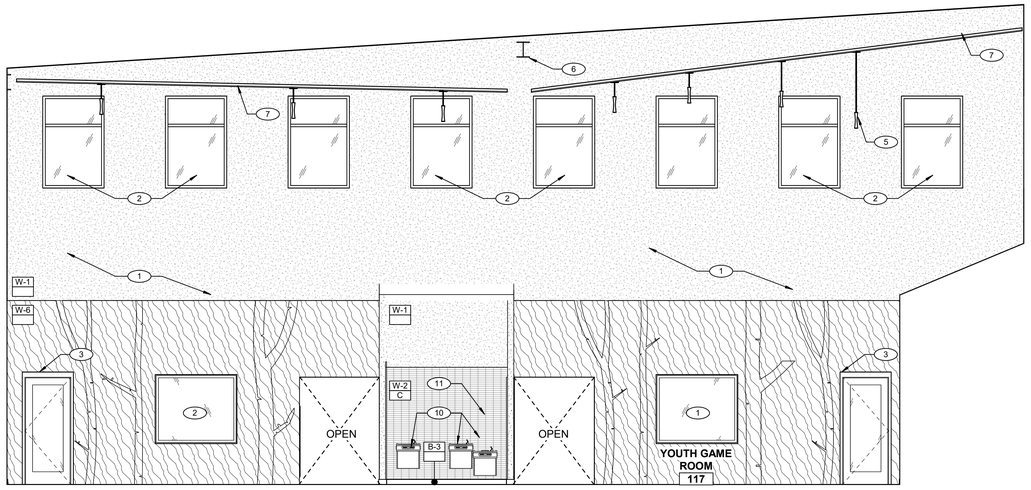

3 YOUTH GR 117 SOUTH
SCALE: 1/4" = 1'-0"

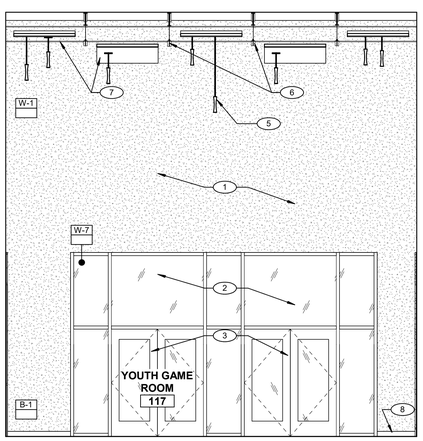

2 YOUTH GR 117 EAST
SCALE: 1/4" = 1'-0"

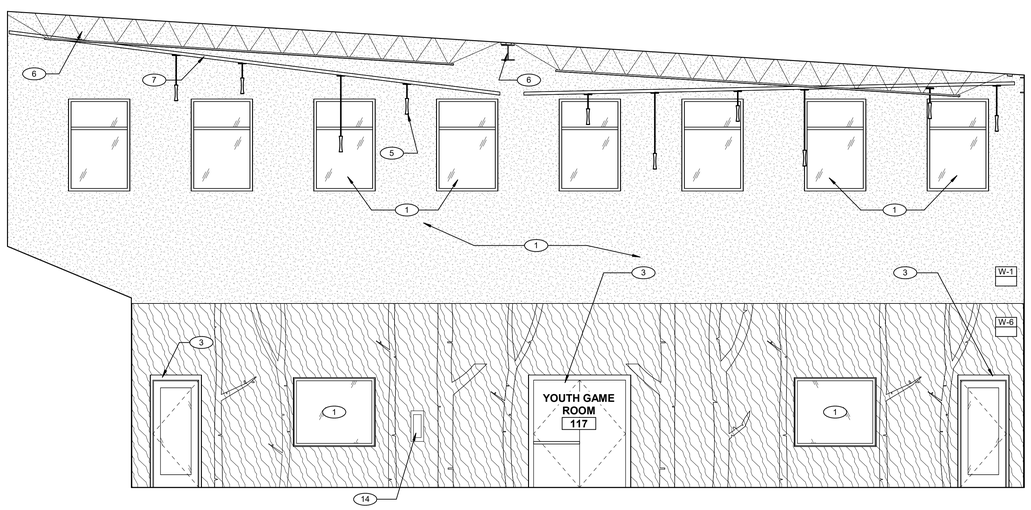

1 YOUTH GR 117 NORTH
SCALE: 1/4" = 1'-0"

GENERAL NOTES

KEYNOTES

1	PAINTED GYP. BD., SEE FINISH SCHEDULE.
2	WINDOW SYSTEM, SEE WINDOW SCHEDULE.
3	DOOR AND FRAME, SEE DOOR SCHEDULE.
4	WOOD BASE, SEE FINISH SCHEDULE.
5	LIGHT FIXTURE, SEE ELECTRICAL DWGS.
6	PAINTED STRUCTURAL FRAMING, SEE STRUCTURAL DWGS.
7	WOOD CEILING SYSTEM, SEE CEILING AND ROOM FINISH SCHEDULE.
8	RUBBER BASE, SEE FINISH SCHEDULE.
9	CASEWORK AND COUNTERTOP, SEE CASEWORK DETAILS.
10	ADA DRINKING FOUNTAIN AND WATER BOTTLE FILLER.
11	TILE WALL, SEE ROOM FINISH SCHEDULE.
12	PAINTED CMU WALL, SEE ROOM FINISH SCHEDULE.
13	DISPLAY CASEWORK.
14	FIRE EXTINGUISHER & CABINET.
15	WASHER & DRYER, OFCI.
16	TWO STATION LAVATORY
17	ROOF ACCESS LADDER, SEE ROOF DETAILS
18	EXPOSED STEEL COLUMN, SEE STRUCT. DWGS.
19	ROOF TRUSS FRAMING, SEE STRUCT. DWGS.
20	GYM WALL PADDING.

tsk
225 South Arlington Avenue
Reno NV, 89501
phone: 775.857.2949
fax: 775.857.2403
www.tska.com

THESE DRAWINGS AND SPECIFICATIONS ARE THE PROPERTY OF TATE SNYDER KIMSEY ARCHITECTS AND MAY NOT BE REPRODUCED OR USED FOR ANY PURPOSE WITHOUT THE ARCHITECTS WRITTEN CONSENT. AS INSTRUMENTS OF SERVICE, THESE DOCUMENTS ARE NOT FINAL AND READY FOR USE, AND THEREFORE NOT VALID, UNLESS THEY ARE SEALED, SIGNED AND DATED.

Copyright, Ltd 2023

Consultant

PLEASE RECYCLE

Project
CITY OF FERNLEY CRRC

Job No: 21-058.00

Owner
CITY OF FERNLEY

50 % CONSTRUCTION DOCUMENTS

REVISIONS

REV	DATE	DESCRIPTION

Sheet Title
INTERIOR ELEVATIONS

Date: MARCH 21, 2023
Sheet No:
A5.03

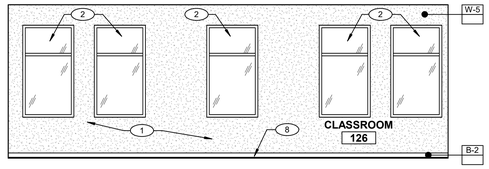

11 CLASSROOM 126 SOUTH
SCALE: 1/4" = 1'-0"

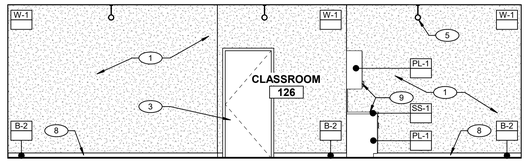

10 CLASSROOM 126 EAST
SCALE: 1/4" = 1'-0"

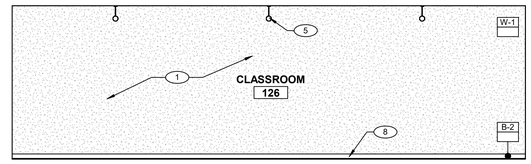

12 CLASSROOM 126 WEST
SCALE: 1/4" = 1'-0"

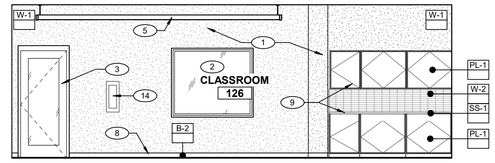

9 CLASSROOM 126 NORTH
SCALE: 1/4" = 1'-0"

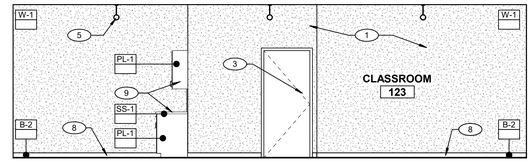

8 CLASSROOM 123 WEST
SCALE: 1/4" = 1'-0"

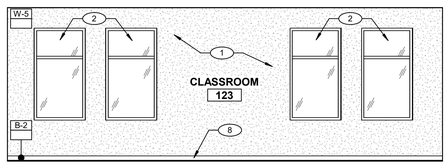

7 CLASSROOM 123 SOUTH
SCALE: 1/4" = 1'-0"

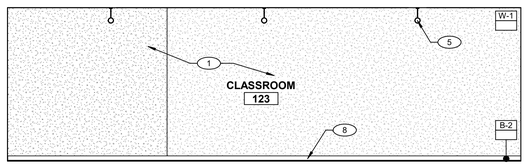

6 CLASSROOM 123 EAST
SCALE: 1/4" = 1'-0"

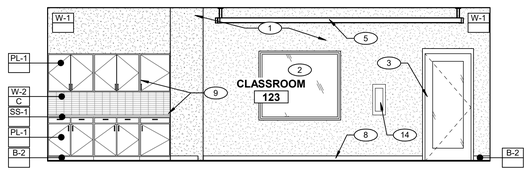

5 CLASSROOM 123 NORTH
SCALE: 1/4" = 1'-0"

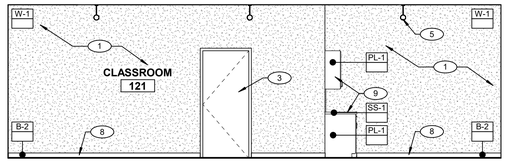

4 CLASSROOM 121 WEST
SCALE: 1/4" = 1'-0"

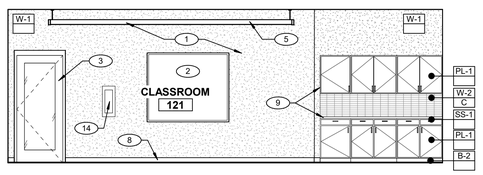

3 CLASSROOM 121 SOUTH
SCALE: 1/4" = 1'-0"

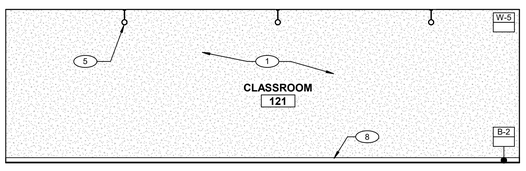

2 CLASSROOM 121 EAST
SCALE: 1/4" = 1'-0"

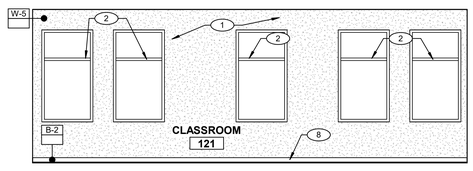

1 CLASSROOM 121 NORTH
SCALE: 1/4" = 1'-0"

GENERAL NOTES

KEYNOTES

1	PAINTED GYP. BD., SEE FINISH SCHEDULE.
2	WINDOW SYSTEM, SEE WINDOW SCHEDULE.
3	DOOR AND FRAME, SEE DOOR SCHEDULE.
4	WOOD BASE, SEE FINISH SCHEDULE.
5	LIGHT FIXTURE, SEE ELECTRICAL DWGS.
6	PAINTED STRUCTURAL FRAMING, SEE STRUCTURAL DWGS.
7	WOOD CEILING SYSTEM, SEE CEILING AND ROOM FINISH SCHEDULE.
8	RUBBER BASE, SEE FINISH SCHEDULE.
9	CASEWORK AND COUNTERTOP, SEE CASEWORK DETAILS.
10	ADA DRINKING FOUNTAIN AND WATER BOTTLE FILLER.
11	TILE WALL, SEE ROOM FINISH SCHEDULE.
12	PAINTED CMU WALL, SEE ROOM FINISH SCHEDULE.
13	DISPLAY CASEWORK.
14	FIRE EXTINGUISHER & CABINET.
15	WASHER & DRYER, OFCI.
16	TWO STATION LAVATORY
17	ROOF ACCESS LADDER, SEE ROOF DETAILS
18	EXPOSED STEEL COLUMN, SEE STRUCT. DWGS.
19	ROOF TRUSS FRAMING, SEE STRUCT. DWGS.
20	GYM WALL PADDING.

tsk
225 South Arlington Avenue
Reno NV, 89501
phone: 775.857.2949
fax: 775.857.2403
www.tska.com

THESE DRAWINGS AND SPECIFICATIONS ARE THE PROPERTY OF TATE SNYDER KIMSEY ARCHITECTS AND MAY NOT BE REPRODUCED OR USED FOR ANY PURPOSE WITHOUT THE ARCHITECTS WRITTEN CONSENT. AS INSTRUMENTS OF SERVICE, THESE DOCUMENTS ARE NOT FINAL AND READY FOR USE, AND THEREFORE NOT VALID, UNLESS THEY ARE SEALED, SIGNED AND DATED.
Copyright, Ltd 2023

Consultant

PLEASE RECYCLE

Project
CITY OF FERNLEY CRRC

Job No: 21-058.00

Owner
CITY OF FERNLEY

50 % CONSTRUCTION DOCUMENTS

REVISIONS		
REV	DATE	DESCRIPTION

Sheet Title
INTERIOR ELEVATIONS

Date: MARCH 21, 2023
Sheet No:
A5.04

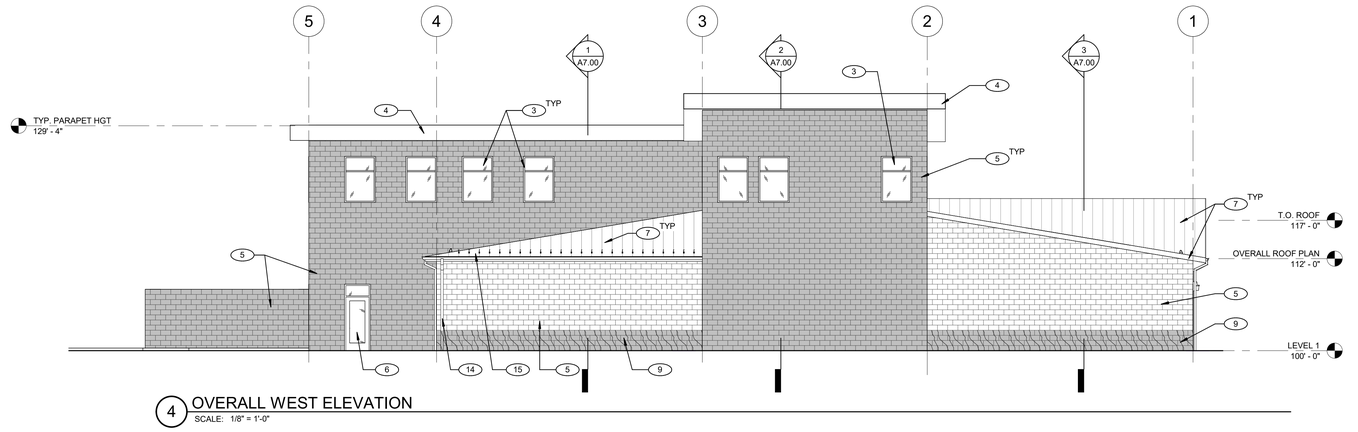

4 OVERALL WEST ELEVATION
SCALE: 1/8" = 1'-0"

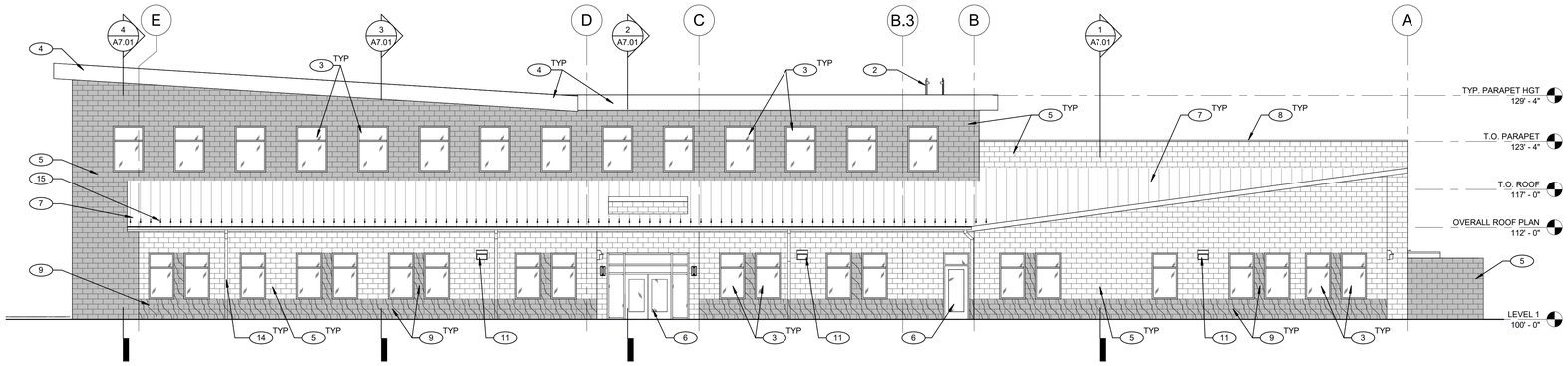

3 OVERALL SOUTH ELEVATION
SCALE: 1/8" = 1'-0"

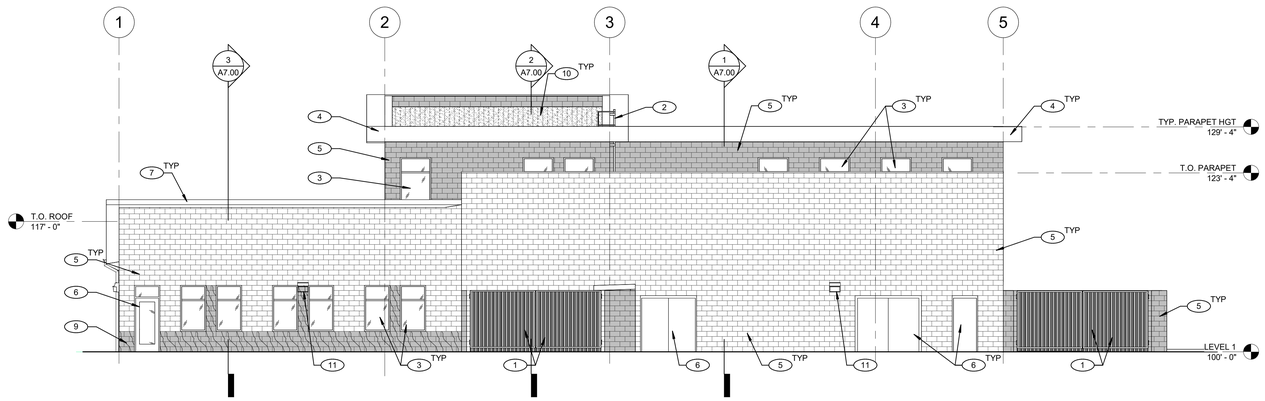

2 OVERALL EAST ELEVATION
SCALE: 1/8" = 1'-0"

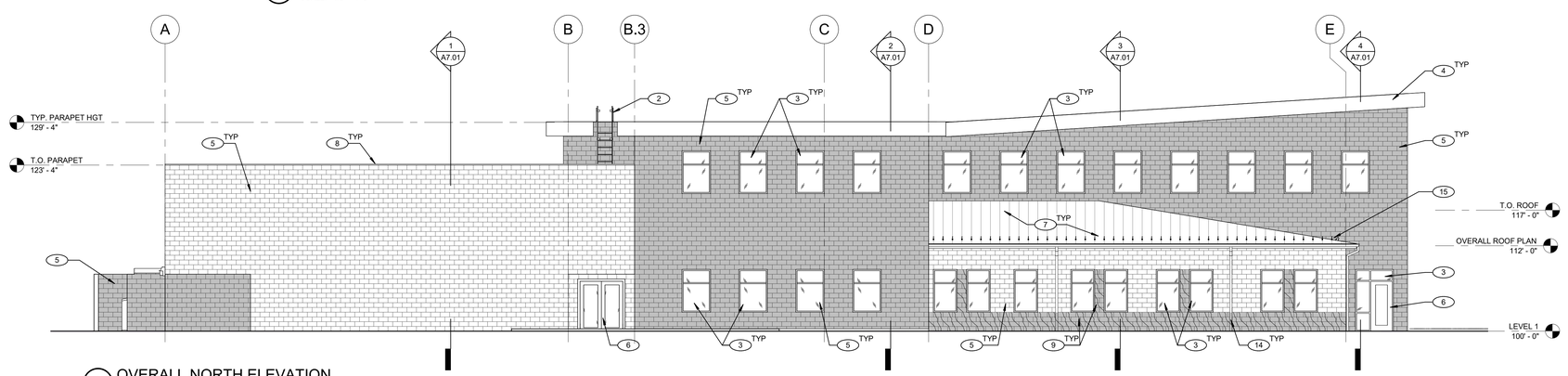

1 OVERALL NORTH ELEVATION
SCALE: 1/8" = 1'-0"

GENERAL NOTES

1. ALL FLOOR AND (T.O.) PARAPET ELEVATIONS SHOWN ARE TAKEN FROM ED LEVEL WHICH IS EQUAL 100'-0". CIVIL FINISH FLOOR LEVEL XXXX.XX
2. ALL EXPOSED MASONRY TO RECEIVE GRAFFITI COATING, INCLUDING ALL SITE WALLS.
3. SEE SHEET AX.XX FOR MATERIAL FINISH INFORMATION.
4. SEE ARCHITECTURAL SITE SHEETS FOR RETAINING WALLS, SITE STAIRS, AND SITE PLANTERS.

KEYNOTES

1. PAINTED METAL GATE & SUPPORTS, SEE DOOR SCHEDULE
2. ROOF ACCESS LADDER, SEE ROOF DETAILS
3. WINDOW SYSTEM, SEE WINDOW SCHEDULE.
4. METAL PANEL SYSTEM, SEE DETAIL X/AX.XX
5. CMU WALL, SEE LEGEND FOR TYPE.
6. DOOR AND FRAME, SEE DOOR SCHEDULE.
7. STANDING SEAM ROOF. SEE ROOF PLANS.
8. METAL PARAPET CAP. SEE ROOF DETAILS.
9. WOOD RAIN SCREEN, SEE LEGEND.
10. TPO ROOFING, SEE ROOF PLANS
11. LIGHT FIXTURE, SEE ELECT. DWGS.
12. PAINTED STEEL COLUMN, SEE STRUCTURAL DWGS.
13. CMU STONE VENEER, SEE FINISH SCHEDULE.
14. GUTTER & DOWNSPOUT
15. CLAMP ON SNOW FENCE

LEGEND

- GLAZING
- METAL PANELING
- WOOD RAIN SCREEN
- CMU 1
- CMU 2
- CMU 3
- CMU VENEER

tsk
225 South Arlington Avenue
Reno NV, 89501
phone: 775.857.2949
fax: 775.857.2403
www.tska.com

THESE DRAWINGS AND SPECIFICATIONS ARE THE PROPERTY OF TATE SNYDER KIMSEY ARCHITECTS AND MAY NOT BE REPRODUCED OR USED FOR ANY PURPOSE WITHOUT THE ARCHITECTS WRITTEN CONSENT. AS INSTRUMENTS OF SERVICE, THESE DOCUMENTS ARE NOT FINAL AND READY FOR USE, AND THEREFORE NOT VALID, UNLESS THEY ARE SEALED, SIGNED AND DATED.

Copyright, Ltd 2023

Consultant

PLEASE RECYCLE

Project
CITY OF FERNLEY CRRC

Job No: 21-058.00

Owner
CITY OF FERNLEY

50 % CONSTRUCTION DOCUMENTS

REVISIONS		
REV	DATE	DESCRIPTION

Sheet Title
EXTERIOR ELEVATIONS - BASE BID

Date: MARCH 21, 2023
Sheet No:
A6.00

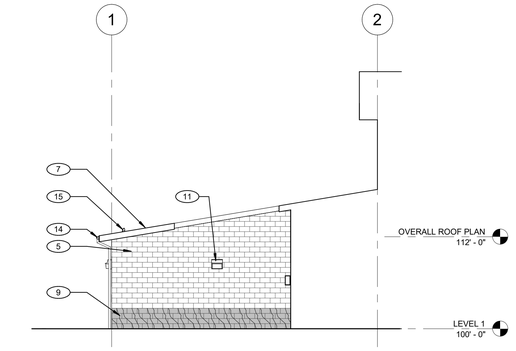

4 PARTIAL ELEV - WEST 119
SCALE: 1/8" = 1'-0"

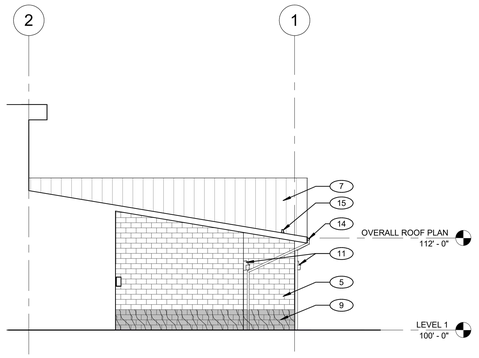

3 PARTIAL ELEV - EAST 119
SCALE: 1/8" = 1'-0"

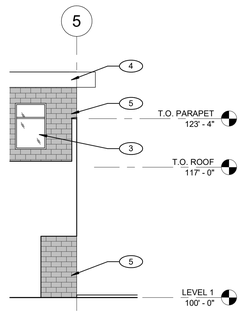

2 PARTIAL ELEV - WEST 101
SCALE: 1/8" = 1'-0"

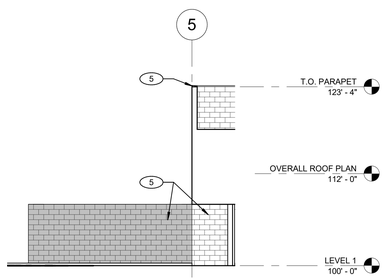

1 PARTIAL ELEV - EAST 101
SCALE: 1/8" = 1'-0"

GENERAL NOTES

1. ALL FLOOR AND (T.O.) PARAPET ELEVATIONS SHOWN ARE TAKEN FROM ED LEVEL WHICH IS EQUAL 100'-0". CIVIL FINISH FLOOR LEVEL XXXX.XX
2. ALL EXPOSED MASONRY TO RECEIVE GRAFFITI COATING, INCLUDING ALL SITE WALLS.
3. SEE SHEET AX.XX FOR MATERIAL FINISH INFORMATION.
4. SEE ARCHITECTURAL SITE SHEETS FOR RETAINING WALLS, SITE STAIRS, AND SITE PLANTERS.

KEYNOTES

1. PAINTED METAL GATE & SUPPORTS, SEE DOOR SCHEDULE
2. ROOF ACCESS LADDER, SEE ROOF DETAILS
3. WINDOW SYSTEM, SEE WINDOW SCHEDULE.
4. METAL PANEL SYSTEM, SEE DETAIL X/AX.XX
5. CMU WALL, SEE LEGEND FOR TYPE.
6. DOOR AND FRAME, SEE DOOR SCHEDULE.
7. STANDING SEAM ROOF. SEE ROOF PLANS.
8. METAL PARAPET CAP. SEE ROOF DETAILS.
9. WOOD RAIN SCREEN, SEE LEGEND.
10. TPO ROOFING, SEE ROOF PLANS
11. LIGHT FIXTURE, SEE ELECT. DWGS.
12. PAINTED STEEL COLUMN, SEE STRUCTURAL DWGS.
13. CMU STONE VENEER, SEE FINISH SCHEDULE.
14. GUTTER & DOWNSPOUT
15. CLAMP ON SNOW FENCE

LEGEND

- GLAZING
- METAL PANELING
- WOOD RAIN SCREEN
- CMU 1
- CMU 2
- CMU 3
- CMU VENEER

KEYPLAN

tsk
225 South Arlington Avenue
Reno NV, 89501
phone: 775.857.2949
fax: 775.857.2403
www.tska.com

THESE DRAWINGS AND SPECIFICATIONS ARE THE PROPERTY OF TATE SNYDER KIMSEY ARCHITECTS AND MAY NOT BE REPRODUCED OR USED FOR ANY PURPOSE WITHOUT THE ARCHITECTS WRITTEN CONSENT.
AS INSTRUMENTS OF SERVICE, THESE DOCUMENTS ARE NOT FINAL AND READY FOR USE, AND THEREFORE NOT VALID, UNLESS THEY ARE SEALED, SIGNED AND DATED.
Copyright, Ltd 2023

Consultant

PLEASE RECYCLE

Project
CITY OF FERNLEY CRRC

Job No: 21-058.00

Owner
CITY OF FERNLEY

50 % CONSTRUCTION DOCUMENTS

REVISIONS		
REV	DATE	DESCRIPTION

Sheet Title
EXTERIOR ELEVATIONS - BASE BID

Date: MARCH 21, 2023
Sheet No:
A6.01

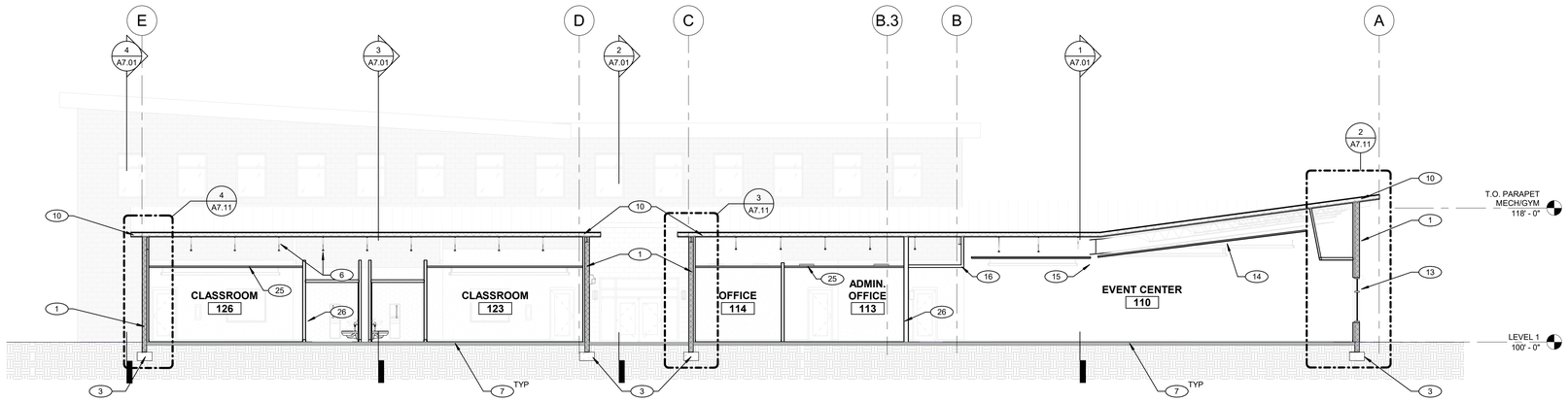

3 Section 3
SCALE: 1/8" = 1'-0"

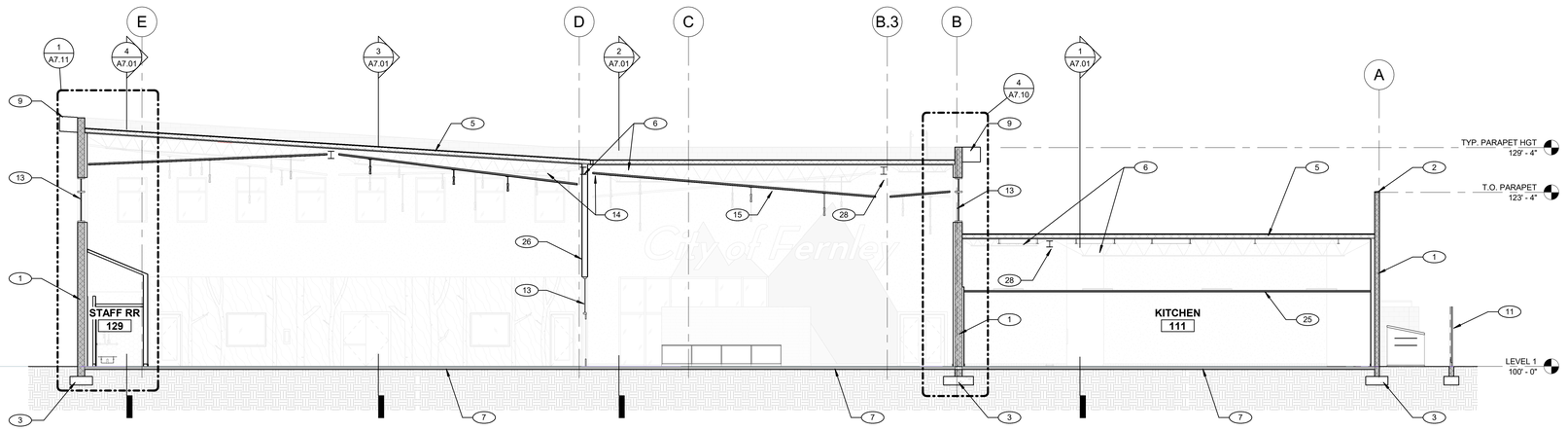

2 Section 2
SCALE: 1/8" = 1'-0"

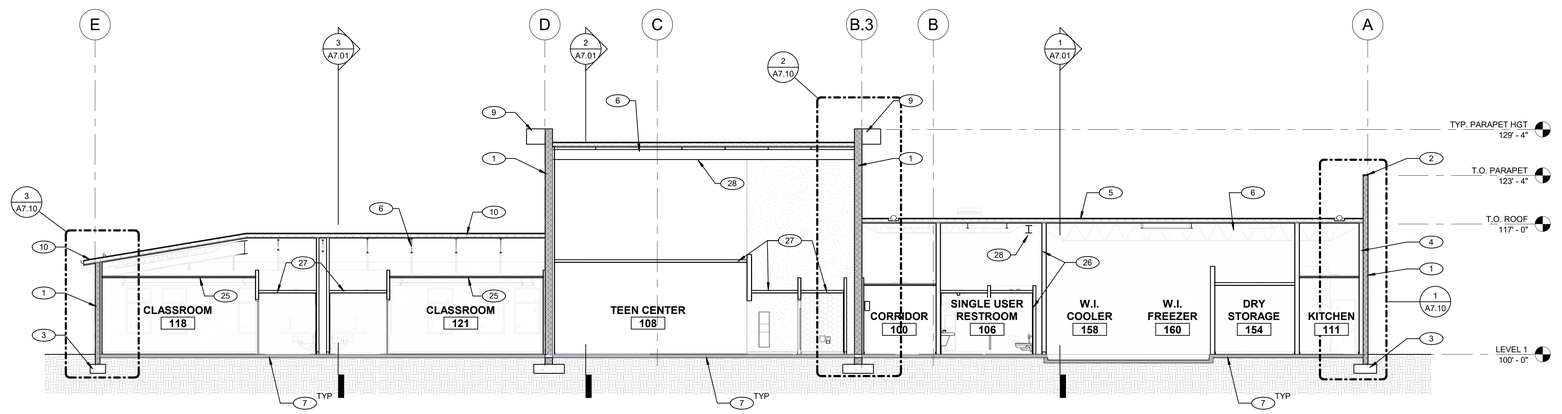

1 Section 1
SCALE: 1/8" = 1'-0"

GENERAL NOTES

1. REFER TO STRUCTURAL DRAWINGS FOR FOOTING AND SLAB REQUIREMENTS.
2. SEE SHEETS A4.XX, ROOF PLAN AND ROOF DETAILS.
3. REFER TO FLOOR PLANS FOR PARTITION TYPES.
4. PAINT ALL EXPOSED INTERIOR AND EXTERIOR STRUCTURAL STEEL - SEE FINISH SCHEDULE AND ELEVATIONS.
5. REFER TO FINISH SCHEDULE FOR FLOOR, WALL, AND CEILING FINISHES.
6. SEE ELEVATIONS FOR CMU COLOR AND TEXTURE.
7. ALL PENETRATIONS THROUGH WALLS WITH SOUND INSULATION SHALL BE SEALED TIGHT WITH ACOUSTICAL INSULATION AND SEALANT.
8. ALL FLOOR AND (T.O.) PARAPET ELEVATIONS SHOWN ARE TAKEN FROM ED LEVEL WHICH IS EQUAL 100'-0". CIVIL FINISH FLOOR LEVEL XXXX.XX
9. REFER TO STRUCTURAL DETAILS FOR TYPICAL INTERIOR PARTITION CONNECTIONS.
10. FOR FINISH OF INTERIOR CMU WALLS EXPOSED, SEE FINISH SCHEDULE.

KEYNOTES

1. CMU WALL, SEE LEGEND FOR TYPE.
2. METAL PARAPET CAP. SEE ROOF DETAILS.
3. CONCRETE FOOTINGS, SEE STRUCT. DWGS.
4. 4" WALL FURRING, SEE WALL TYPES.
5. TPO ROOFING, SEE ROOF PLANS
6. STRUCTURAL FRAMING, SEE STRUCT. DWGS.
7. CONCRETE FLOOR SLAB, SEE STRUCT. DWGS.
8. ROOF HATCH, SEE 1/A4.21
9. METAL PANEL SYSTEM, SEE DETAIL X/AX.XX
10. STANDING SEAM ROOF. SEE ROOF PLANS.
11. PAINTED METAL GATE & SUPPORTS, SEE DOOR SCHEDULE
12. ROOF ACCESS LADDER, SEE ROOF DETAILS
13. WINDOW SYSTEM, SEE WINDOW SCHEDULE.
14. WOOD CEILING SYSTEM, SEE CEILING AND ROOM FINISH SCHEDULE.
15. LIGHT FIXTURE, SEE ELECT. DWGS.
16. GYP. BD. SOFFIT, SEE REF. CLG. PLANS.
17. DOOR AND FRAME, SEE DOOR SCHEDULE.
18. SLOPED SIDEWALK, SEE CIVIL DWGS.
19. PAINTED STEEL COLUMN, SEE STRUCTURAL DWGS.
20. WOOD RAIN SCREEN, SEE LEGEND.
21. CMU STONE VENEER, SEE FINISH SCHEDULE.
22. FINISH GRADE, SEE CIVIL DWGS.
23. 2 1/2"MTL. STUD WALL FURRING, SEE WALL TYPES.
24. PAINTED GYP. BD., SEE FINISH SCHEDULE
25. ACT LAY IN CEILING, SEE REF. CLG. PLANS
26. WALL PARTITION, SEE FLOOR PLANS FOR WALL TYPES
27. PAINTED GYP. BD. CEILING, SEE ROOM FINISH SCHEDULE.
28. STEEL BEAM, SEE STRUCT. DWGS.

tsk
225 South Arlington Avenue
Reno NV, 89501
phone: 775.857.2949
fax: 775.857.2403
www.tska.com

THESE DRAWINGS AND SPECIFICATIONS ARE THE PROPERTY OF TATE SNYDER KIMSEY ARCHITECTS AND MAY NOT BE REPRODUCED OR USED FOR ANY PURPOSE WITHOUT THE ARCHITECTS WRITTEN CONSENT. AS INSTRUMENTS OF SERVICE, THESE DOCUMENTS ARE NOT FINAL AND READY FOR USE, AND THEREFORE NOT VALID, UNLESS THEY ARE SEALED, SIGNED AND DATED.

Copyright, Ltd 2023

Consultant

PLEASE RECYCLE

Project
CITY OF FERNLEY CRRC

Job No: 21-058.00

Owner
CITY OF FERNLEY

50 % CONSTRUCTION DOCUMENTS

REVISIONS

REV	DATE	DESCRIPTION

Sheet Title
BUILDING SECTIONS - BASE BID

Date: MARCH 21, 2023
Sheet No:
A7.00

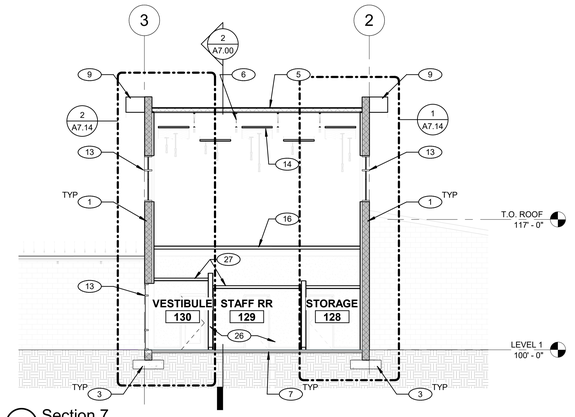

4 Section 7
SCALE: 1/8" = 1'-0"

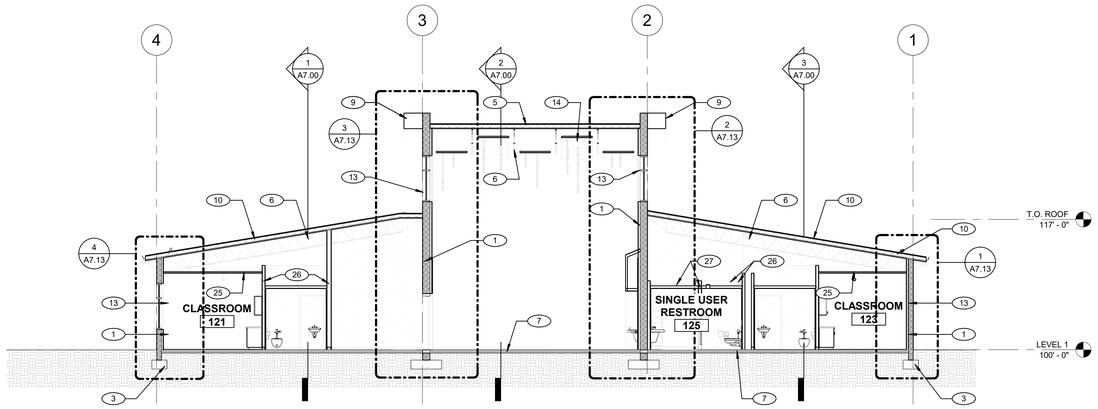

3 Section 6
SCALE: 1/8" = 1'-0"

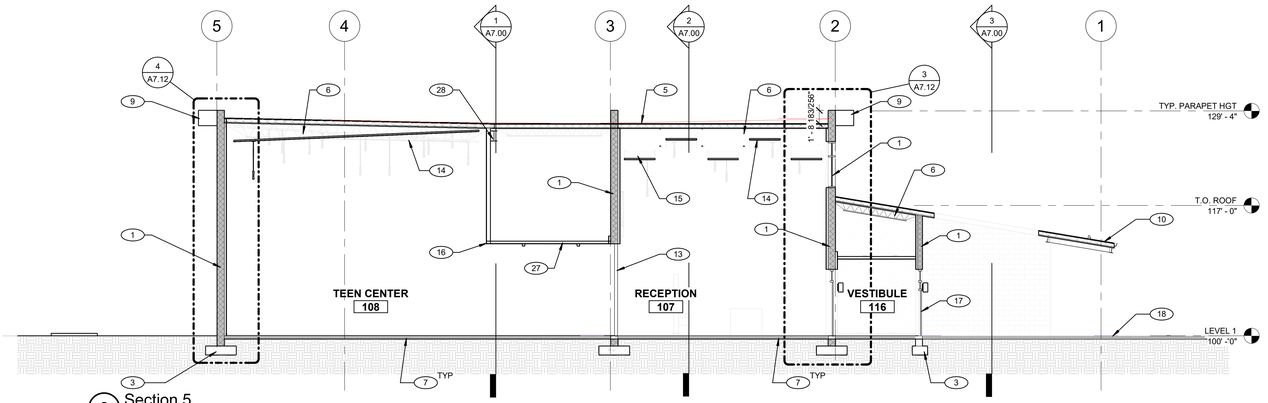

2 Section 5
SCALE: 1/8" = 1'-0"

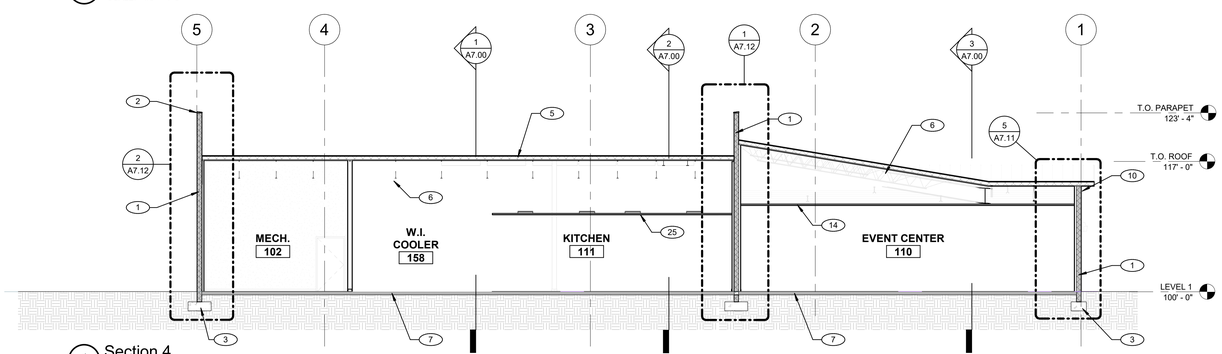

1 Section 4
SCALE: 1/8" = 1'-0"

GENERAL NOTES

1. REFER TO STRUCTURAL DRAWINGS FOR FOOTING AND SLAB REQUIREMENTS.
2. SEE SHEETS A4.XX, ROOF PLAN AND ROOF DETAILS.
3. REFER TO FLOOR PLANS FOR PARTITION TYPES.
4. PAINT ALL EXPOSED INTERIOR AND EXTERIOR STRUCTURAL STEEL - SEE FINISH SCHEDULE AND ELEVATIONS.
5. REFER TO FINISH SCHEDULE FOR FLOOR, WALL, AND CEILING FINISHES.
6. SEE ELEVATIONS FOR CMU COLOR AND TEXTURE.
7. ALL PENETRATIONS THROUGH WALLS WITH SOUND INSULATION SHALL BE SEALED TIGHT WITH ACOUSTICAL INSULATION AND SEALANT.
8. ALL FLOOR AND (T.O.) PARAPET ELEVATIONS SHOWN ARE TAKEN FROM ED LEVEL WHICH IS EQUAL 100'-0". CIVIL FINISH FLOOR LEVEL XXXX.XX
9. REFER TO STRUCTURAL DETAILS FOR TYPICAL INTERIOR PARTITION CONNECTIONS.
10. FOR FINISH OF INTERIOR CMU WALLS EXPOSED, SEE FINISH SCHEDULE.

KEYNOTES

1. CMU WALL, SEE LEGEND FOR TYPE.
2. METAL PARAPET CAP. SEE ROOF DETAILS.
3. CONCRETE FOOTINGS, SEE STRUCT. DWGS.
4. 4" WALL FURRING, SEE WALL TYPES.
5. TPO ROOFING, SEE ROOF PLANS
6. STRUCTURAL FRAMING, SEE STRUCT. DWGS.
7. CONCRETE FLOOR SLAB, SEE STRUCT. DWGS.
8. ROOF HATCH, SEE 1/A4.21
9. METAL PANEL SYSTEM, SEE DETAIL X/AX.XX
10. STANDING SEAM ROOF. SEE ROOF PLANS.
11. PAINTED METAL GATE & SUPPORTS, SEE DOOR SCHEDULE
12. ROOF ACCESS LADDER, SEE ROOF DETAILS
13. WINDOW SYSTEM, SEE WINDOW SCHEDULE.
14. WOOD CEILING SYSTEM, SEE CEILING AND ROOM FINISH SCHEDULE.
15. LIGHT FIXTURE, SEE ELECT. DWGS.
16. GYP. BD. SOFFIT, SEE REF. CLG. PLANS.
17. DOOR AND FRAME, SEE DOOR SCHEDULE.
18. SLOPED SIDEWALK, SEE CIVIL DWGS.
19. PAINTED STEEL COLUMN, SEE STRUCTURAL DWGS.
20. WOOD RAIN SCREEN, SEE LEGEND.
21. CMU STONE VENEER, SEE FINISH SCHEDULE.
22. FINISH GRADE, SEE CIVIL DWGS.
23. 2 1/2"MTL. STUD WALL FURRING, SEE WALL TYPES.
24. PAINTED GYP. BD., SEE FINISH SCHEDULE
25. ACT LAY IN CEILING, SEE REF. CLG. PLANS
26. WALL PARTITION, SEE FLOOR PLANS FOR WALL TYPES
27. PAINTED GYP. BD. CEILING, SEE ROOM FINISH SCHEDULE.
28. STEEL BEAM, SEE STRUCT. DWGS.

tsk
225 South Arlington Avenue
Reno NV, 89501
phone: 775.857.2949
fax: 775.857.2403
www.tska.com

THESE DRAWINGS AND SPECIFICATIONS ARE THE PROPERTY OF TATE SNYDER KIMSEY ARCHITECTS AND MAY NOT BE REPRODUCED OR USED FOR ANY PURPOSE WITHOUT THE ARCHITECTS WRITTEN CONSENT. AS INSTRUMENTS OF SERVICE, THESE DOCUMENTS ARE NOT FINAL AND READY FOR USE, AND THEREFORE NOT VALID, UNLESS THEY ARE SEALED, SIGNED AND DATED.
Copyright, Ltd 2023

Consultant

PLEASE RECYCLE

Project
CITY OF FERNLEY CRRC

Job No: 21-058.00

Owner
CITY OF FERNLEY

50 % CONSTRUCTION DOCUMENTS

REVISIONS		
REV	DATE	DESCRIPTION

Sheet Title
BUILDING SECTIONS - BASE BID

Date: MARCH 21, 2023
Sheet No:
A7.01

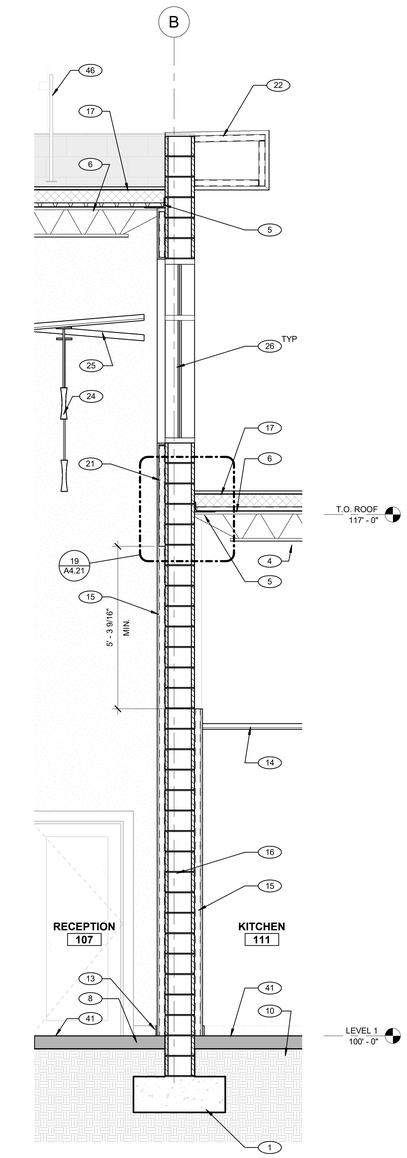

4 WALL SECTION 4
SCALE: 1/2" = 1'-0"

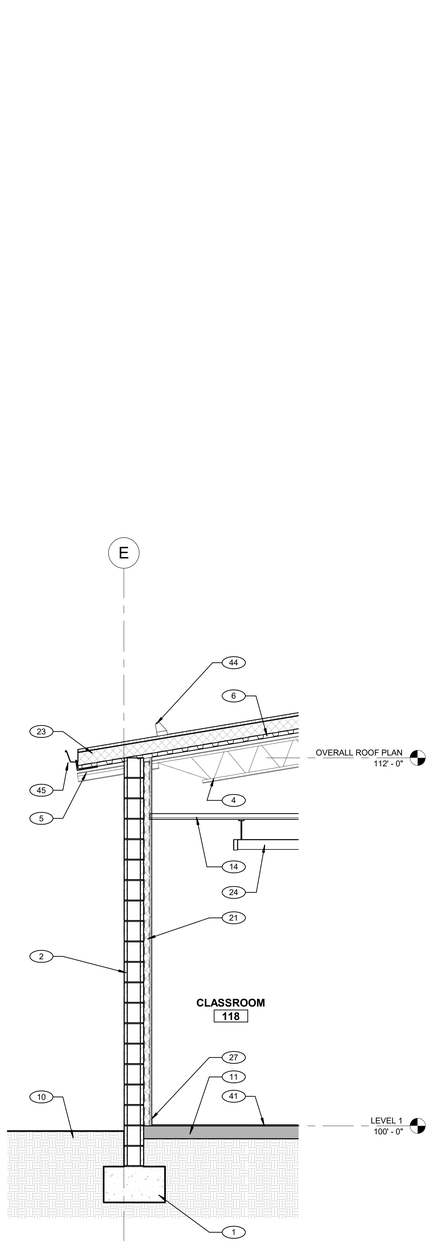

3 WALL SECTION 3
SCALE: 1/2" = 1'-0"

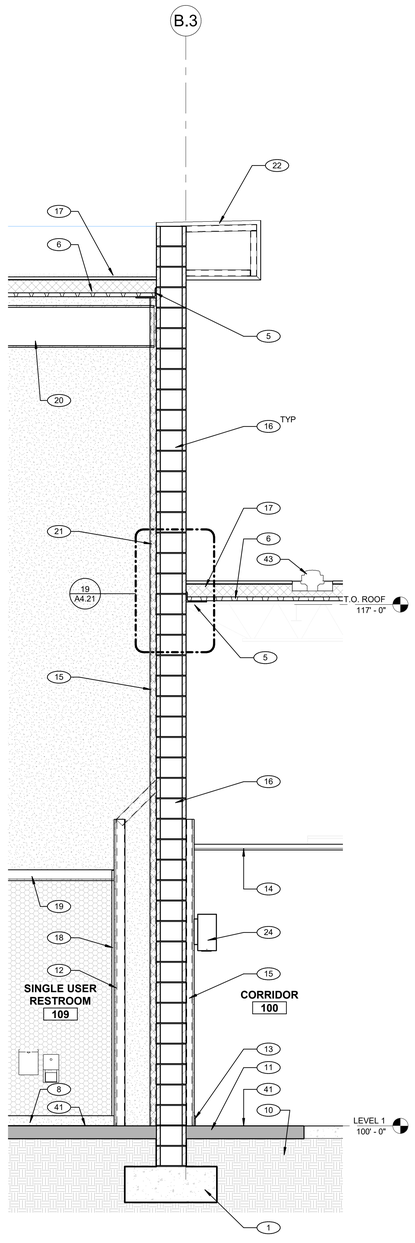

2 WALL SECTION 2
SCALE: 1/2" = 1'-0"

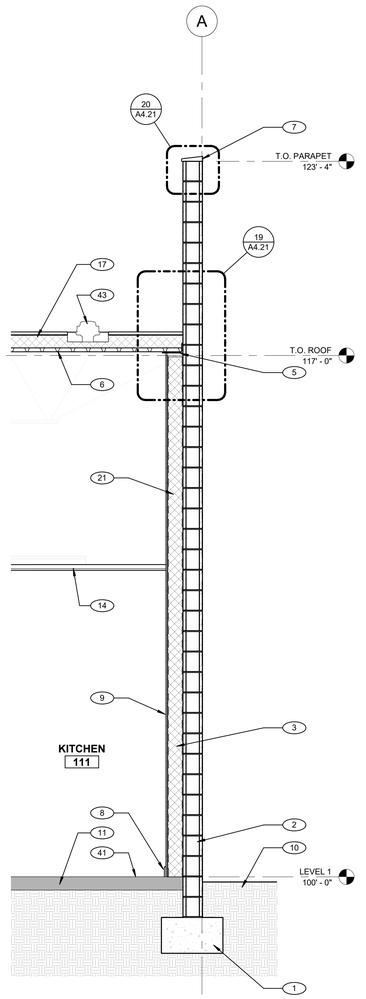

1 WALL SECTION 1
SCALE: 1/2" = 1'-0"

GENERAL NOTES

1. REFER TO STRUCTURAL DRAWINGS FOR FOOTING AND SLAB REQUIREMENTS.
2. SEE SHEETS A4.XX, ROOF PLAN AND ROOF DETAILS.
3. REFER TO FLOOR PLANS FOR PARTITION TYPES.
4. PAINT ALL EXPOSED INTERIOR AND EXTERIOR STRUCTURAL STEEL - SEE FINISH SCHEDULE AND ELEVATIONS.
5. REFER TO FINISH SCHEDULE FOR FLOOR, WALL, AND CEILING FINISHES.
6. SEE ELEVATIONS FOR CMU COLOR AND TEXTURE.
7. ALL PENETRATIONS THROUGH WALLS WITH SOUND INSULATION SHALL BE SEALED TIGHT WITH ACOUSTICAL INSULATION AND SEALANT.
8. ALL FLOOR AND (T.O.) PARAPET ELEVATIONS SHOWN ARE TAKEN FROM ED LEVEL WHICH IS EQUAL 100'-0". CIVIL FINISH FLOOR LEVEL XXXX.XX
9. REFER TO STRUCTURAL DETAILS FOR TYPICAL INTERIOR PARTITION CONNECTIONS.
10. FOR FINISH OF INTERIOR CMU WALLS EXPOSED, SEE FINISH SCHEDULE.

KEYNOTES

1. CONCRETE FOOTINGS, SEE STRUCT. DWGS.
2. 8" CMU WALL, SEE LEGEND FOR TYPE.
3. 3 5/8" MTL STUD WALL FURRING, SEE WALL TYPES.
4. ROOF TRUSS FRAMING, SEE STRUCT. DWGS.
5. STRUCTURAL BENT EDGE PLATE. SEE STRUCT. DWGS
6. STRUCTURAL ROOF DECK, SEE STRUCT. DWGS.
7. PRECAST CONCRETE PARAPET CAP. SEE ROOF DETAILS.
8. TILE WALL BASE, SEE ROOM FINISH SCHEDULE.
9. FRP TEXTURED WALL PANELS, SEE ROOM FINISH SCHEDULE.
10. FINISH GRADE, SEE CIVIL DWGS.
11. CONCRETE FLOOR SLAB, SEE STRUCT. DWGS.
12. WALL PARTITION, SEE FLOOR PLANS FOR WALL TYPES
13. WOOD BASE, SEE FINISH SCHEDULE.
14. ACT LAY IN CEILING, SEE REF. CLG. PLANS
15. 2 1/2" MTL. STUD WALL FURRING, SEE WALL TYPES.
16. 12" CMU WALL, SEE LEGEND FOR TYPE.
17. TPO ROOFING WITH 5" ROOF INSULATION. SEE ROOF DWGS.
18. TILE WALL, SEE ROOM FINISH SCHEDULE.
19. PAINTED GYP. BD. CEILING, SEE ROOM FINISH SCHEDULE.
20. STEEL BEAM, SEE STRUCT. DWGS.
21. RIGID WALL INSULATION, SEE WALL TYPES.
22. METAL PANEL ROOF SOFFIT, SEE ROOF DETAILS.
23. STANDING SEAM & INSULATION. SEE ROOF PLANS.
24. LIGHT FIXTURE, SEE ELECT. DWGS.
25. WOOD CEILING SYSTEM, SEE CEILING AND ROOM FINISH SCHEDULE.
26. WINDOW SYSTEM, SEE WINDOW SCHEDULE.
27. RUBBER BASE, SEE FINISH SCHEDULE.
28. DOOR AND FRAME, SEE DOOR SCHEDULE.
29. PAINTED GYP. BD., SEE FINISH SCHEDULE.
31. TWO STATION LAVATORY
32. SLOPED SIDEWALK, SEE CIVIL DWGS.
33. WATER CLOSET, SEE PLUMBING DWGS.
34. TOILET PARTITION, SEE SPEC'S
35. PAINTED STEEL COLUMN, SEE STRUCTURAL DWGS.
37. 1 1/2" MTL. STUD WALL FURRING, SEE WALL TYPES.
38. WOOD RAIN SCREEN, SEE LEGEND.
39. CMU VENEER ROOF SOFFIT, SEE ROOF DETAILS.
40. BATT INSULATION, SEE SPEC'S.
41. FINISHED FLOORING, SEE ROOM FINISH SCHEDULE.
42. WOOD RAIN SCREEN CEILING.
43. ROOF DRAIN, SEE ROOF DETAILS
44. SNOW/ICE GUARD. SEE SPECIFICATIONS.
45. METAL GUTTER W/ SLOPE TO DRAIN PIPES.
46. ROOF CROSSOVER LADDER, SEE ROOF DETAILS.
47. PAINTED GYP. BD. SOFFIT, SEE CEILING DETAILS
48. EXPANSION JOINT, SEE ROOF DETAIL XX/A4.01

tsk
225 South Arlington Avenue
Reno NV, 89501
phone: 775.857.2949
fax: 775.857.2403
www.tska.com

THESE DRAWINGS AND SPECIFICATIONS ARE THE PROPERTY OF TATE SNYDER KIMSEY ARCHITECTS AND MAY NOT BE REPRODUCED OR USED FOR ANY PURPOSE WITHOUT THE ARCHITECTS WRITTEN CONSENT.
AS INSTRUMENTS OF SERVICE, THESE DOCUMENTS ARE NOT FINAL AND READY FOR USE, AND THEREFORE NOT VALID, UNLESS THEY ARE SEALED, SIGNED AND DATED.
Copyright, Ltd 2023

Consultant

PLEASE RECYCLE

Project
CITY OF FERNLEY CRRC

Job No: 21-058.00

Owner
CITY OF FERNLEY

50 % CONSTRUCTION DOCUMENTS

REVISIONS		
REV	DATE	DESCRIPTION

Sheet Title
WALL SECTION

Date: MARCH 21, 2023
Sheet No:
A7.10

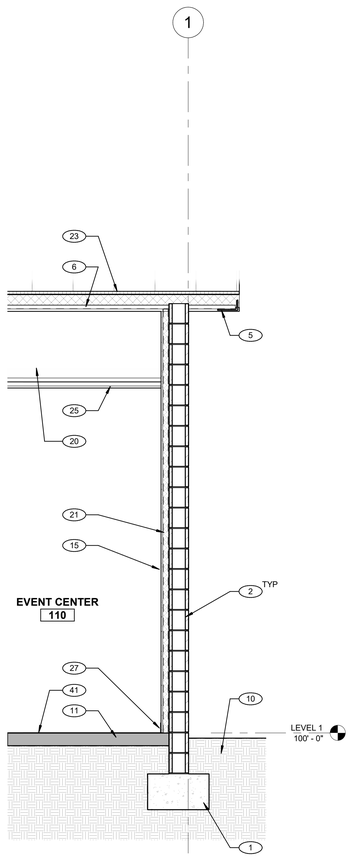

5 WALL SECTION 9
SCALE: 1/2" = 1'-0"

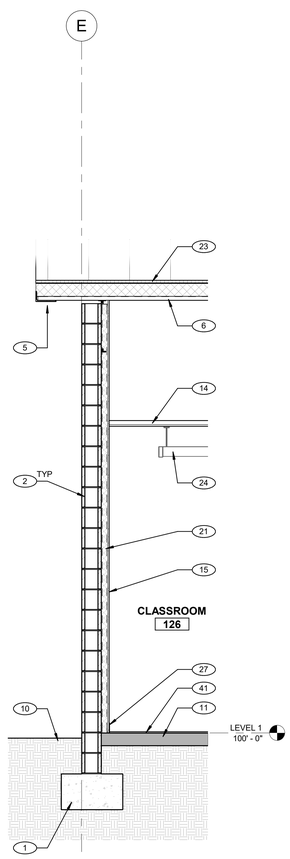

4 WALL SECTION 8
SCALE: 1/2" = 1'-0"

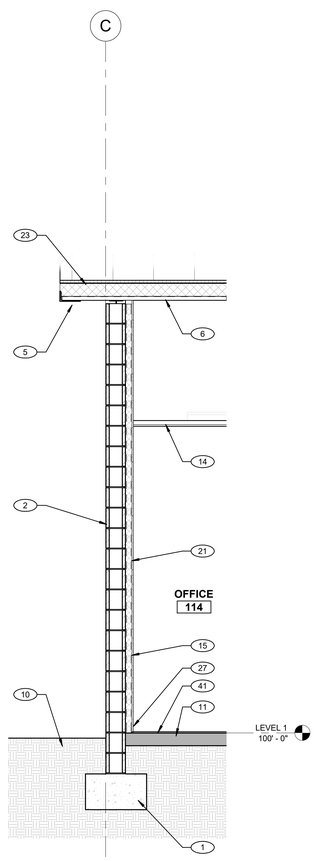

3 WALL SECTION 7
SCALE: 1/2" = 1'-0"

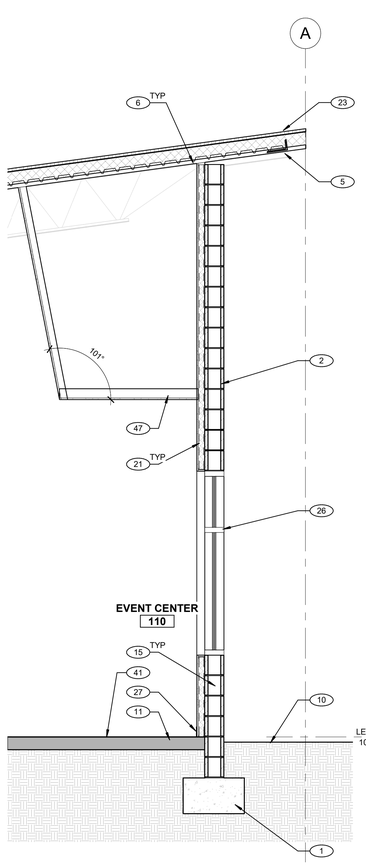

2 WALL SECTION 6
SCALE: 1/2" = 1'-0"

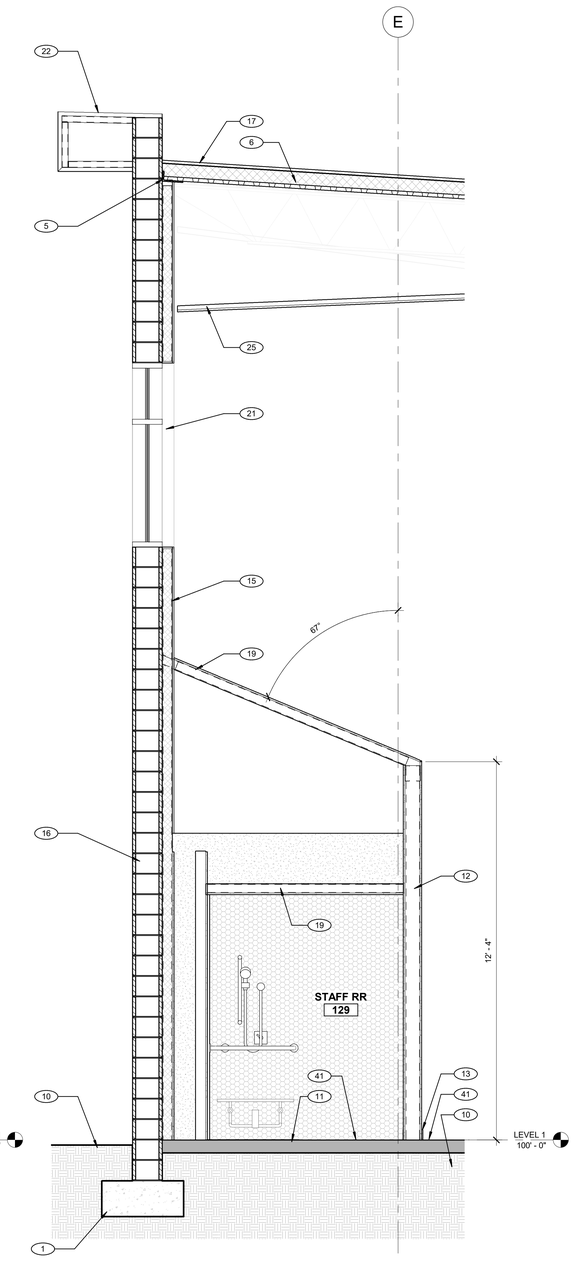

1 WALL SECTION 5
SCALE: 1/2" = 1'-0"

GENERAL NOTES

1. REFER TO STRUCTURAL DRAWINGS FOR FOOTING AND SLAB REQUIREMENTS.
2. SEE SHEETS A4.XX, ROOF PLAN AND ROOF DETAILS.
3. REFER TO FLOOR PLANS FOR PARTITION TYPES.
4. PAINT ALL EXPOSED INTERIOR AND EXTERIOR STRUCTURAL STEEL - SEE FINISH SCHEDULE AND ELEVATIONS.
5. REFER TO FINISH SCHEDULE FOR FLOOR, WALL, AND CEILING FINISHES.
6. SEE ELEVATIONS FOR CMU COLOR AND TEXTURE.
7. ALL PENETRATIONS THROUGH WALLS WITH SOUND INSULATION SHALL BE SEALED TIGHT WITH ACOUSTICAL INSULATION AND SEALANT.
8. ALL FLOOR AND (T.O.) PARAPET ELEVATIONS SHOWN ARE TAKEN FROM ED LEVEL WHICH IS EQUAL 100'-0". CIVIL FINISH FLOOR LEVEL XXXX.XX
9. REFER TO STRUCTURAL DETAILS FOR TYPICAL INTERIOR PARTITION CONNECTIONS.
10. FOR FINISH OF INTERIOR CMU WALLS EXPOSED, SEE FINISH SCHEDULE.

KEYNOTES

1. CONCRETE FOOTINGS, SEE STRUCT. DWGS.
2. 8" CMU WALL, SEE LEGEND FOR TYPE.
3. 3 5/8" MTL STUD WALL FURRING, SEE WALL TYPES.
4. ROOF TRUSS FRAMING, SEE STRUCT. DWGS.
5. STRUCTURAL BENT EDGE PLATE. SEE STRUCT. DWGS
6. STRUCTURAL ROOF DECK, SEE STRUCT. DWGS.
7. PRECAST CONCRETE PARAPET CAP. SEE ROOF DETAILS.
8. TILE WALL BASE, SEE ROOM FINISH SCHEDULE.
9. FRP TEXTURED WALL PANELS, SEE ROOM FINISH SCHEDULE.
10. FINISH GRADE, SEE CIVIL DWGS.
11. CONCRETE FLOOR SLAB, SEE STRUCT. DWGS.
12. WALL PARTITION, SEE FLOOR PLANS FOR WALL TYPES
13. WOOD BASE, SEE FINISH SCHEDULE.
14. ACT LAY IN CEILING, SEE REF. CLG. PLANS
15. 2 1/2" MTL. STUD WALL FURRING, SEE WALL TYPES.
16. 12" CMU WALL, SEE LEGEND FOR TYPE.
17. TPO ROOFING WITH 5" ROOF INSULATION. SEE ROOF DWGS.
18. TILE WALL, SEE ROOM FINISH SCHEDULE.
19. PAINTED GYP. BD. CEILING, SEE ROOM FINISH SCHEDULE.
20. STEEL BEAM, SEE STRUCT. DWGS.
21. RIGID WALL INSULATION, SEE WALL TYPES.
22. METAL PANEL ROOF SOFFIT, SEE ROOF DETAILS.
23. STANDING SEAM & INSULATION. SEE ROOF PLANS.
24. LIGHT FIXTURE, SEE ELECT. DWGS.
25. WOOD CEILING SYSTEM, SEE CEILING AND ROOM FINISH SCHEDULE.
26. WINDOW SYSTEM, SEE WINDOW SCHEDULE.
27. RUBBER BASE, SEE FINISH SCHEDULE.
28. DOOR AND FRAME, SEE DOOR SCHEDULE.
29. PAINTED GYP. BD., SEE FINISH SCHEDULE.
31. TWO STATION LAVATORY
32. SLOPED SIDEWALK, SEE CIVIL DWGS.
33. WATER CLOSET, SEE PLUMBING DWGS.
34. TOILET PARTITION, SEE SPEC'S
35. PAINTED STEEL COLUMN, SEE STRUCTURAL DWGS.
37. 1 1/2" MTL. STUD WALL FURRING, SEE WALL TYPES.
38. WOOD RAIN SCREEN, SEE LEGEND.
39. CMU VENEER ROOF SOFFIT, SEE ROOF DETAILS.
40. BATT INSULATION, SEE SPEC'S.
41. FINISHED FLOORING, SEE ROOM FINISH SCHEDULE
42. WOOD RAIN SCREEN CEILING.
43. ROOF DRAIN, SEE ROOF DETAILS
44. SNOW/ICE GUARD. SEE SPECIFICATIONS.
45. METAL GUTTER W/ SLOPE TO DRAIN PIPES.
46. ROOF CROSSOVER LADDER, SEE ROOF DETAILS.
47. PAINTED GYP. BD. SOFFIT, SEE CEILING DETAILS
48. EXPANSION JOINT, SEE ROOF DETAIL XX/A4.01

tsk
225 South Arlington Avenue
Reno NV, 89501
phone: 775.857.2949
fax: 775.857.2403
www.tska.com

THESE DRAWINGS AND SPECIFICATIONS ARE THE PROPERTY OF TATE SNYDER KIMSEY ARCHITECTS AND MAY NOT BE REPRODUCED OR USED FOR ANY PURPOSE WITHOUT THE ARCHITECTS WRITTEN CONSENT. AS INSTRUMENTS OF SERVICE, THESE DOCUMENTS ARE NOT FINAL AND READY FOR USE, AND THEREFORE NOT VALID, UNLESS THEY ARE SEALED, SIGNED AND DATED.
Copyright, Ltd 2023

Consultant

PLEASE RECYCLE

Project
CITY OF FERNLEY CRRC

Job No: 21-058.00

Owner
CITY OF FERNLEY

50 % CONSTRUCTION DOCUMENTS

REVISIONS		
REV	DATE	DESCRIPTION

Sheet Title
WALL SECTION

Date: MARCH 21, 2023
Sheet No:
A7.11

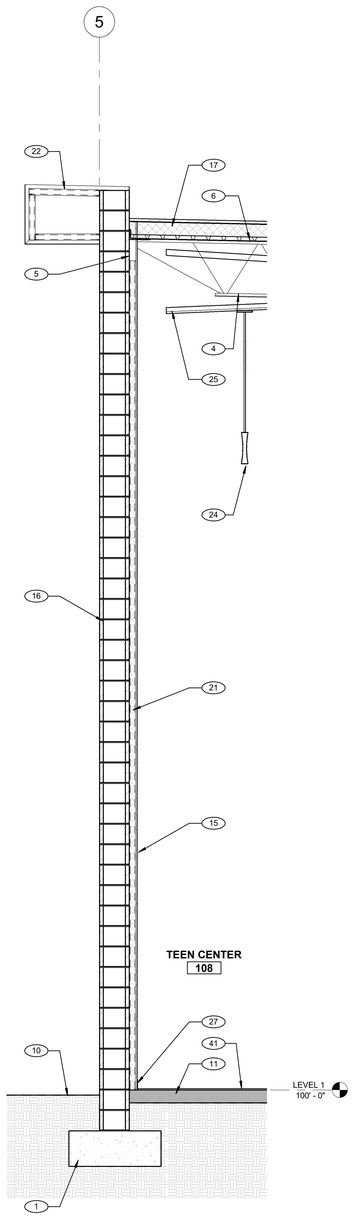

4 WALL SECTION 13
SCALE: 1/2" = 1'-0"

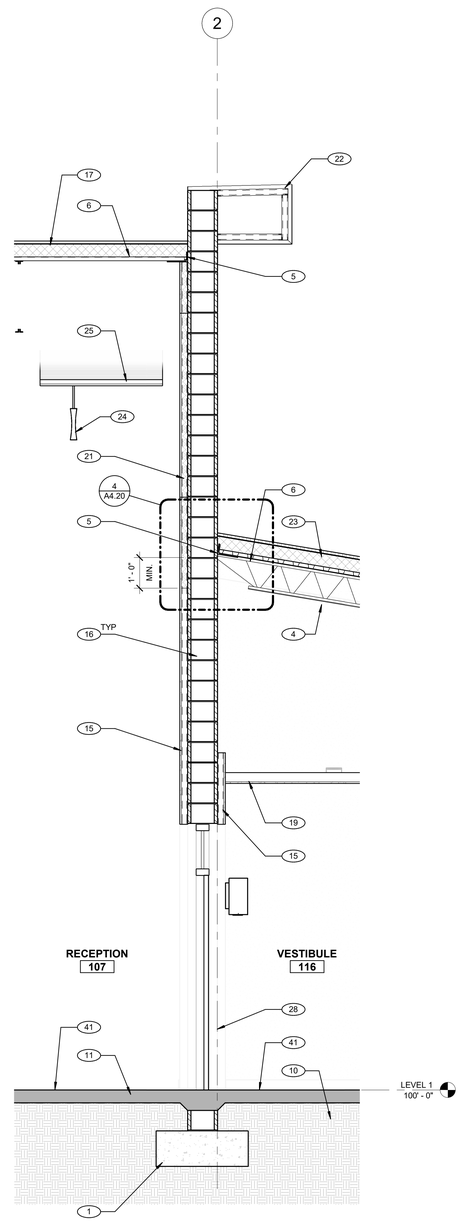

3 WALL SECTION 12
SCALE: 1/2" = 1'-0"

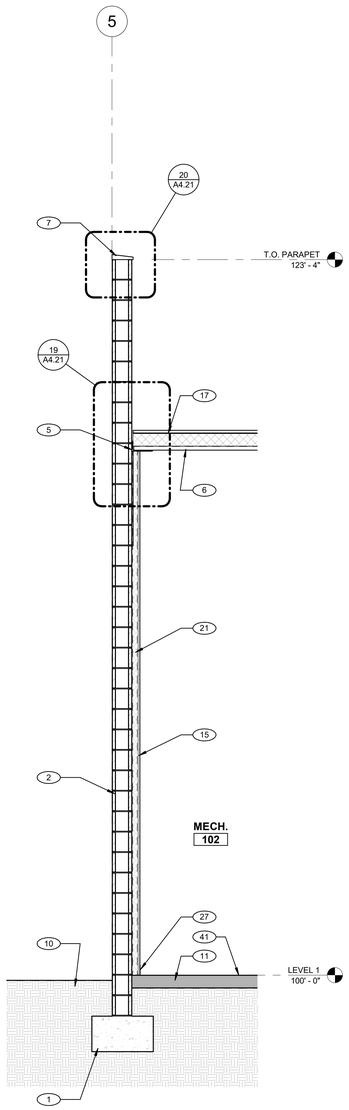

2 WALL SECTION 11
SCALE: 1/2" = 1'-0"

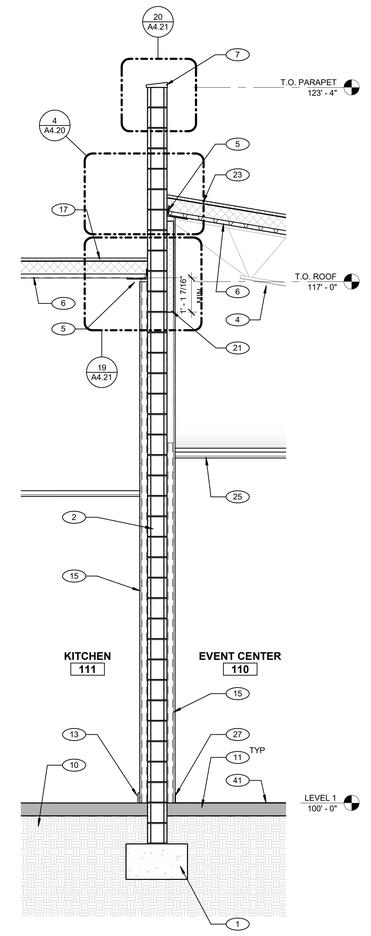

1 WALL SECTION 10
SCALE: 1/2" = 1'-0"

GENERAL NOTES

1. REFER TO STRUCTURAL DRAWINGS FOR FOOTING AND SLAB REQUIREMENTS.
2. SEE SHEETS A4.XX, ROOF PLAN AND ROOF DETAILS.
3. REFER TO FLOOR PLANS FOR PARTITION TYPES.
4. PAINT ALL EXPOSED INTERIOR AND EXTERIOR STRUCTURAL STEEL - SEE FINISH SCHEDULE AND ELEVATIONS.
5. REFER TO FINISH SCHEDULE FOR FLOOR, WALL, AND CEILING FINISHES.
6. SEE ELEVATIONS FOR CMU COLOR AND TEXTURE.
7. ALL PENETRATIONS THROUGH WALLS WITH SOUND INSULATION SHALL BE SEALED TIGHT WITH ACOUSTICAL INSULATION AND SEALANT.
8. ALL FLOOR AND (T.O.) PARAPET ELEVATIONS SHOWN ARE TAKEN FROM ED LEVEL WHICH IS EQUAL 100'-0". CIVIL FINISH FLOOR LEVEL XXXX.XX
9. REFER TO STRUCTURAL DETAILS FOR TYPICAL INTERIOR PARTITION CONNECTIONS.
10. FOR FINISH OF INTERIOR CMU WALLS EXPOSED, SEE FINISH SCHEDULE.

KEYNOTES

1. CONCRETE FOOTINGS, SEE STRUCT. DWGS.
2. 8" CMU WALL, SEE LEGEND FOR TYPE.
3. 3 5/8" MTL STUD WALL FURRING, SEE WALL TYPES.
4. ROOF TRUSS FRAMING, SEE STRUCT. DWGS.
5. STRUCTURAL BENT EDGE PLATE. SEE STRUCT. DWGS
6. STRUCTURAL ROOF DECK, SEE STRUCT. DWGS.
7. PRECAST CONCRETE PARAPET CAP. SEE ROOF DETAILS.
8. TILE WALL BASE, SEE ROOM FINISH SCHEDULE.
9. FRP TEXTURED WALL PANELS, SEE ROOM FINISH SCHEDULE.
10. FINISH GRADE, SEE CIVIL DWGS.
11. CONCRETE FLOOR SLAB, SEE STRUCT. DWGS.
12. WALL PARTITION, SEE FLOOR PLANS FOR WALL TYPES
13. WOOD BASE, SEE FINISH SCHEDULE.
14. ACT LAY IN CEILING, SEE REF. CLG. PLANS
15. 2 1/2" MTL. STUD WALL FURRING, SEE WALL TYPES.
16. 12" CMU WALL, SEE LEGEND FOR TYPE.
17. TPO ROOFING WITH 5" ROOF INSULATION. SEE ROOF DWGS.
18. TILE WALL, SEE ROOM FINISH SCHEDULE.
19. PAINTED GYP. BD. CEILING, SEE ROOM FINISH SCHEDULE.
20. STEEL BEAM, SEE STRUCT. DWGS.
21. RIGID WALL INSULATION, SEE WALL TYPES.
22. METAL PANEL ROOF SOFFIT, SEE ROOF DETAILS.
23. STANDING SEAM & INSULATION. SEE ROOF PLANS.
24. LIGHT FIXTURE, SEE ELECT. DWGS.
25. WOOD CEILING SYSTEM, SEE CEILING AND ROOM FINISH SCHEDULE.
26. WINDOW SYSTEM, SEE WINDOW SCHEDULE.
27. RUBBER BASE, SEE FINISH SCHEDULE.
28. DOOR AND FRAME, SEE DOOR SCHEDULE.
29. PAINTED GYP. BD., SEE FINISH SCHEDULE.
31. TWO STATION LAVATORY
32. SLOPED SIDEWALK, SEE CIVIL DWGS.
33. WATER CLOSET, SEE PLUMBING DWGS.
34. TOILET PARTITION, SEE SPEC'S
35. PAINTED STEEL COLUMN, SEE STRUCTURAL DWGS.
37. 1 1/2" MTL. STUD WALL FURRING, SEE WALL TYPES.
38. WOOD RAIN SCREEN, SEE LEGEND.
39. CMU VENEER ROOF SOFFIT, SEE ROOF DETAILS.
40. BATT INSULATION, SEE SPEC'S.
41. FINISHED FLOORING, SEE ROOM FINISH SCHEDULE
42. WOOD RAIN SCREEN CEILING.
43. ROOF DRAIN, SEE ROOF DETAILS
44. SNOW/ICE GUARD. SEE SPECIFICATIONS.
45. METAL GUTTER W/ SLOPE TO DRAIN PIPES.
46. ROOF CROSSOVER LADDER, SEE ROOF DETAILS.
47. PAINTED GYP. BD. SOFFIT, SEE CEILING DETAILS
48. EXPANSION JOINT, SEE ROOF DETAIL XX/A4.01

tsk
225 South Arlington Avenue
Reno NV, 89501
phone: 775.857.2949
fax: 775.857.2403
www.tska.com

THESE DRAWINGS AND SPECIFICATIONS ARE THE PROPERTY OF TATE SNYDER KIMSEY ARCHITECTS AND MAY NOT BE REPRODUCED OR USED FOR ANY PURPOSE WITHOUT THE ARCHITECTS WRITTEN CONSENT.
AS INSTRUMENTS OF SERVICE, THESE DOCUMENTS ARE NOT FINAL AND READY FOR USE, AND THEREFORE NOT VALID, UNLESS THEY ARE SEALED, SIGNED AND DATED.
Copyright, Ltd 2023

Consultant

PLEASE RECYCLE

Project
CITY OF FERNLEY CRRC

Job No: 21-058.00

Owner
CITY OF FERNLEY

50 % CONSTRUCTION DOCUMENTS

REVISIONS		
REV	DATE	DESCRIPTION

Sheet Title
WALL SECTION

Date: MARCH 21, 2023
Sheet No:
A7.12

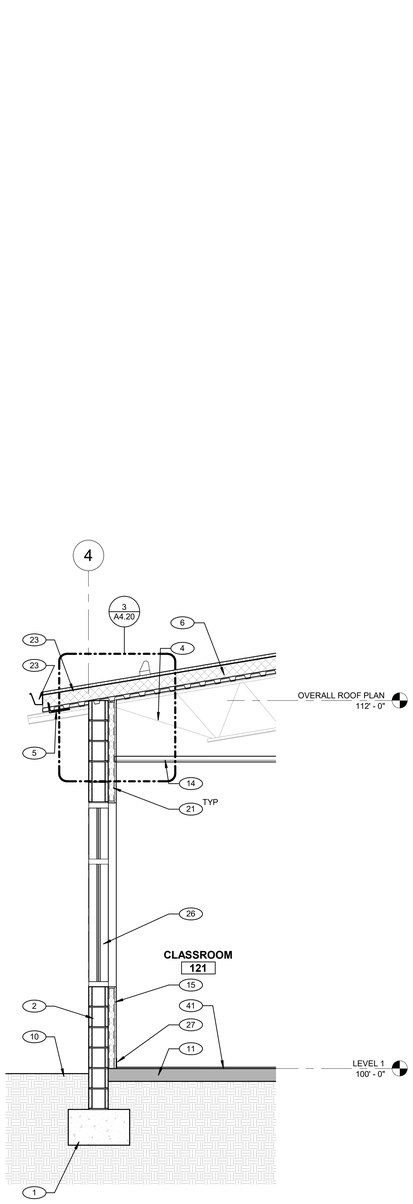

4 WALL SECTION 17
SCALE: 1/2" = 1'-0"

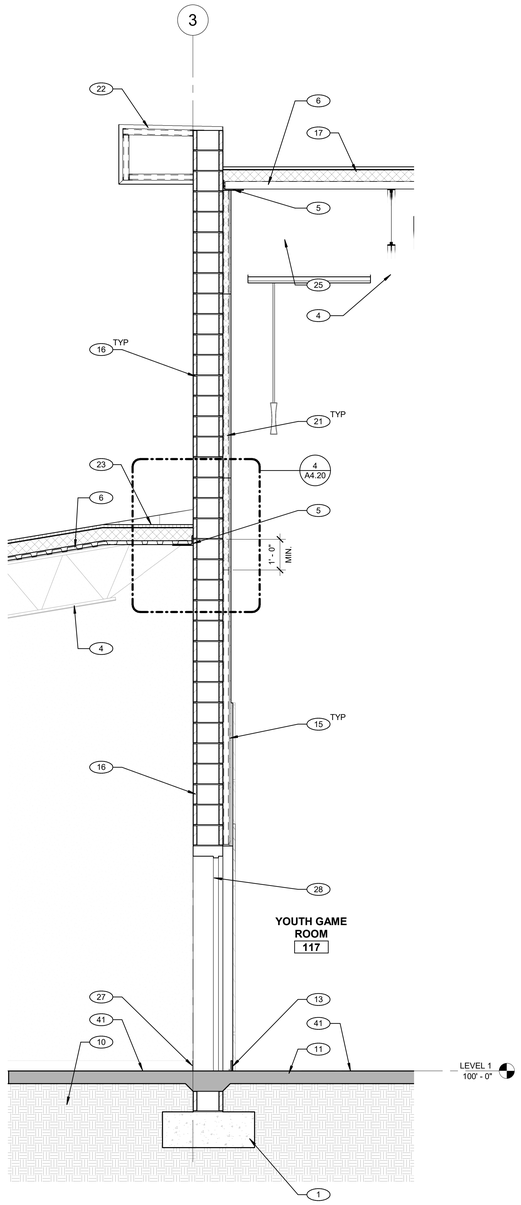

3 WALL SECTION 16
SCALE: 1/2" = 1'-0"

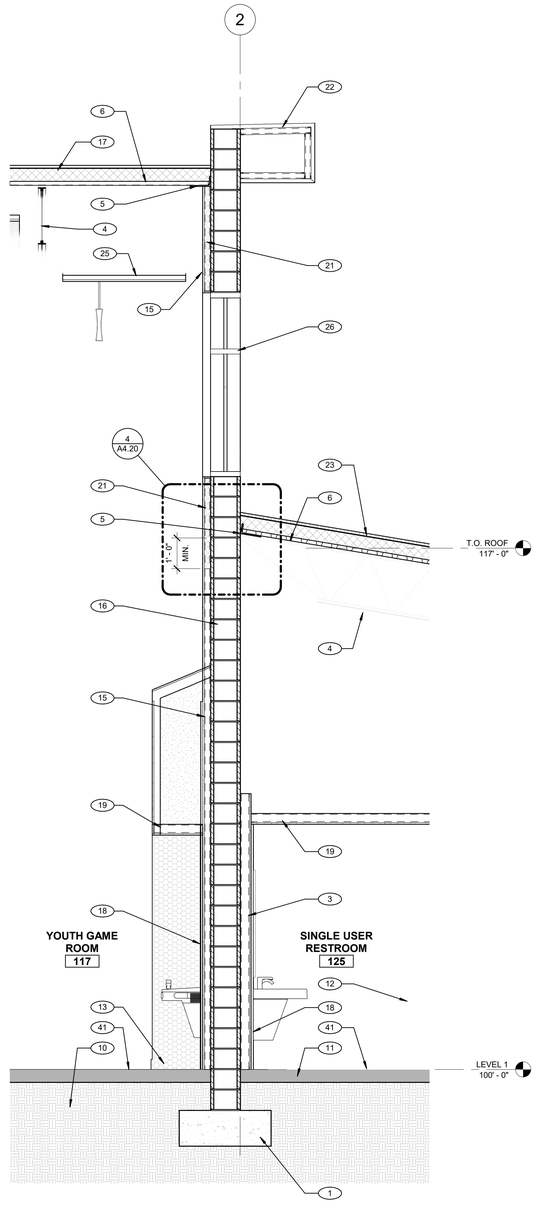

2 WALL SECTION 15
SCALE: 1/2" = 1'-0"

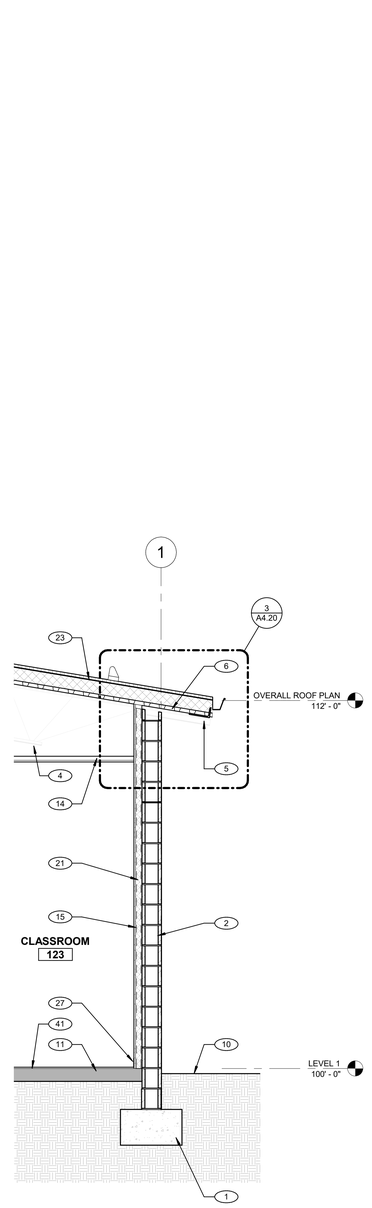

1 WALL SECTION 14
SCALE: 1/2" = 1'-0"

GENERAL NOTES

1. REFER TO STRUCTURAL DRAWINGS FOR FOOTING AND SLAB REQUIREMENTS.
2. SEE SHEETS A4.XX, ROOF PLAN AND ROOF DETAILS.
3. REFER TO FLOOR PLANS FOR PARTITION TYPES.
4. PAINT ALL EXPOSED INTERIOR AND EXTERIOR STRUCTURAL STEEL - SEE FINISH SCHEDULE AND ELEVATIONS.
5. REFER TO FINISH SCHEDULE FOR FLOOR, WALL, AND CEILING FINISHES.
6. SEE ELEVATIONS FOR CMU COLOR AND TEXTURE.
7. ALL PENETRATIONS THROUGH WALLS WITH SOUND INSULATION SHALL BE SEALED TIGHT WITH ACOUSTICAL INSULATION AND SEALANT.
8. ALL FLOOR AND (T.O.) PARAPET ELEVATIONS SHOWN ARE TAKEN FROM ED LEVEL WHICH IS EQUAL 100'-0". CIVIL FINISH FLOOR LEVEL XXXX.XX
9. REFER TO STRUCTURAL DETAILS FOR TYPICAL INTERIOR PARTITION CONNECTIONS.
10. FOR FINISH OF INTERIOR CMU WALLS EXPOSED, SEE FINISH SCHEDULE.

KEYNOTES

1. CONCRETE FOOTINGS, SEE STRUCT. DWGS.
2. 8" CMU WALL, SEE LEGEND FOR TYPE.
3. 3 5/8" MTL STUD WALL FURRING, SEE WALL TYPES.
4. ROOF TRUSS FRAMING, SEE STRUCT. DWGS.
5. STRUCTURAL BENT EDGE PLATE. SEE STRUCT. DWGS
6. STRUCTURAL ROOF DECK, SEE STRUCT. DWGS.
7. PRECAST CONCRETE PARAPET CAP. SEE ROOF DETAILS.
8. TILE WALL BASE, SEE ROOM FINISH SCHEDULE.
9. FRP TEXTURED WALL PANELS, SEE ROOM FINISH SCHEDULE.
10. FINISH GRADE, SEE CIVIL DWGS.
11. CONCRETE FLOOR SLAB, SEE STRUCT. DWGS.
12. WALL PARTITION, SEE FLOOR PLANS FOR WALL TYPES
13. WOOD BASE, SEE FINISH SCHEDULE.
14. ACT LAY IN CEILING, SEE REF. CLG. PLANS
15. 2 1/2" MTL. STUD WALL FURRING, SEE WALL TYPES.
16. 12" CMU WALL, SEE LEGEND FOR TYPE.
17. TPO ROOFING WITH 5" ROOF INSULATION. SEE ROOF DWGS.
18. TILE WALL, SEE ROOM FINISH SCHEDULE.
19. PAINTED GYP. BD. CEILING, SEE ROOM FINISH SCHEDULE.
20. STEEL BEAM, SEE STRUCT. DWGS.
21. RIGID WALL INSULATION, SEE WALL TYPES.
22. METAL PANEL ROOF SOFFIT, SEE ROOF DETAILS.
23. STANDING SEAM & INSULATION. SEE ROOF PLANS.
24. LIGHT FIXTURE, SEE ELECT. DWGS.
25. WOOD CEILING SYSTEM, SEE CEILING AND ROOM FINISH SCHEDULE.
26. WINDOW SYSTEM, SEE WINDOW SCHEDULE.
27. RUBBER BASE, SEE FINISH SCHEDULE.
28. DOOR AND FRAME, SEE DOOR SCHEDULE.
29. PAINTED GYP. BD., SEE FINISH SCHEDULE.
31. TWO STATION LAVATORY
32. SLOPED SIDEWALK, SEE CIVIL DWGS.
33. WATER CLOSET, SEE PLUMBING DWGS.
34. TOILET PARTITION, SEE SPEC'S
35. PAINTED STEEL COLUMN, SEE STRUCTURAL DWGS.
37. 1 1/2" MTL. STUD WALL FURRING, SEE WALL TYPES.
38. WOOD RAIN SCREEN, SEE LEGEND.
39. CMU VENEER ROOF SOFFIT, SEE ROOF DETAILS.
40. BATT INSULATION, SEE SPEC'S.
41. FINISHED FLOORING, SEE ROOM FINISH SCHEDULE
42. WOOD RAIN SCREEN CEILING.
43. ROOF DRAIN, SEE ROOF DETAILS
44. SNOW/ICE GUARD. SEE SPECIFICATIONS.
45. METAL GUTTER W/ SLOPE TO DRAIN PIPES.
46. ROOF CROSSOVER LADDER, SEE ROOF DETAILS.
47. PAINTED GYP. BD. SOFFIT, SEE CEILING DETAILS
48. EXPANSION JOINT, SEE ROOF DETAIL XX/A4.01

tsk
225 South Arlington Avenue
Reno NV, 89501
phone: 775.857.2949
fax: 775.857.2403
www.tska.com

THESE DRAWINGS AND SPECIFICATIONS ARE THE PROPERTY OF TATE SNYDER KIMSEY ARCHITECTS AND MAY NOT BE REPRODUCED OR USED FOR ANY PURPOSE WITHOUT THE ARCHITECTS WRITTEN CONSENT.
AS INSTRUMENTS OF SERVICE, THESE DOCUMENTS ARE NOT FINAL AND READY FOR USE, AND THEREFORE NOT VALID, UNLESS THEY ARE SEALED, SIGNED AND DATED.
Copyright, Ltd 2023

Consultant

PLEASE RECYCLE

Project
CITY OF FERNLEY CRRC

Job No: 21-058.00

Owner
CITY OF FERNLEY

50 % CONSTRUCTION DOCUMENTS

REVISIONS

REV	DATE	DESCRIPTION

Sheet Title
WALL SECTION

Date: MARCH 21, 2023
Sheet No:
A7.13

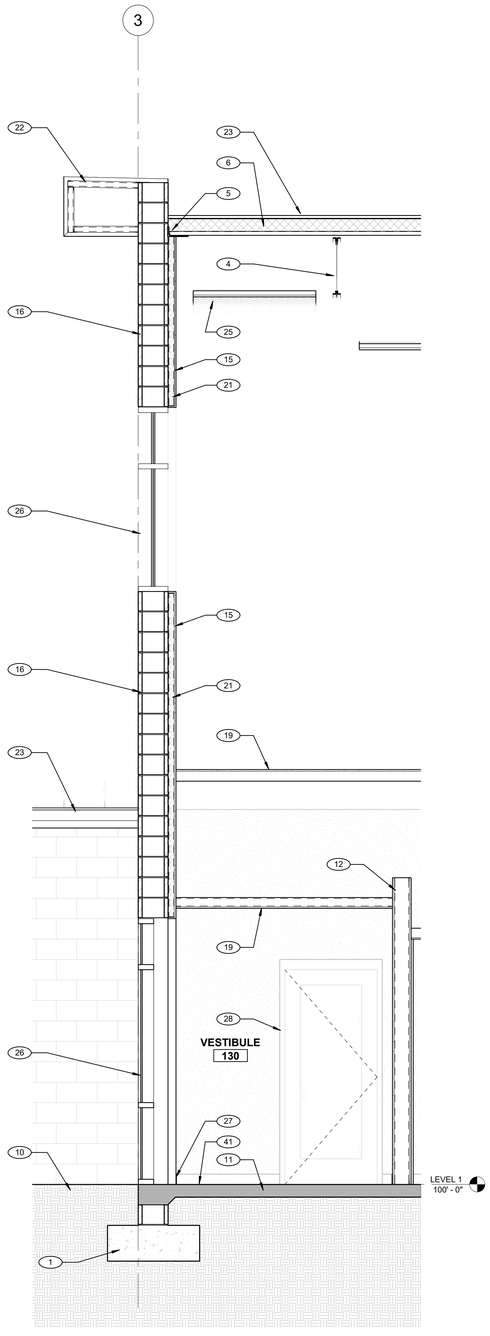

2 WALL SECTION 19
SCALE: 1/2" = 1'-0"

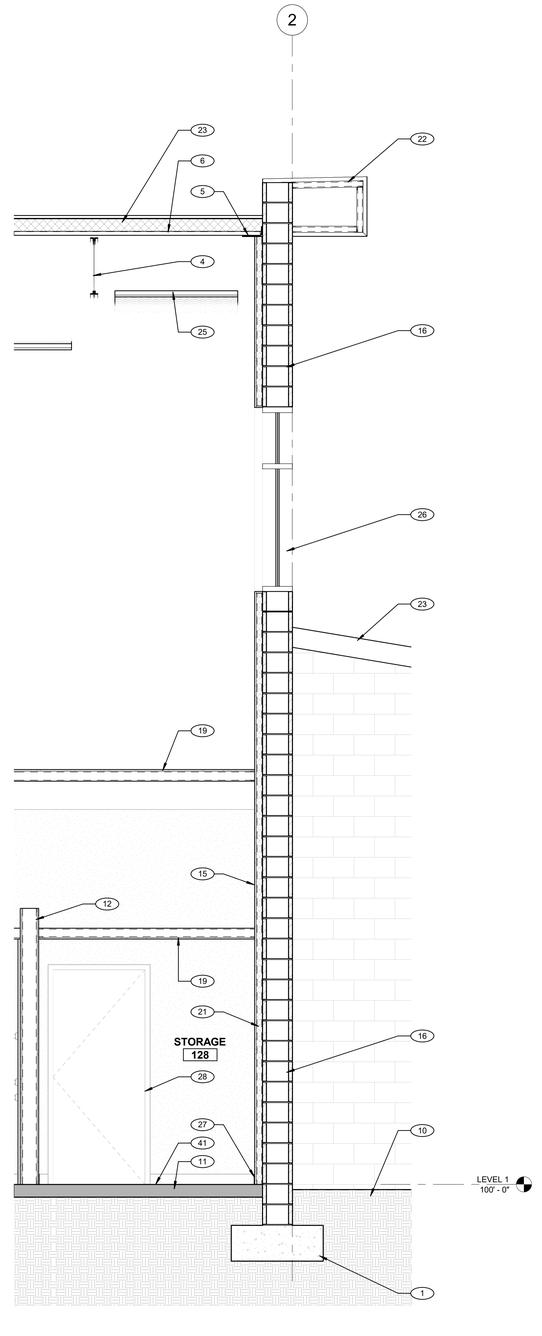

1 WALL SECTION 18
SCALE: 1/2" = 1'-0"

GENERAL NOTES

1. REFER TO STRUCTURAL DRAWINGS FOR FOOTING AND SLAB REQUIREMENTS.
2. SEE SHEETS A4.XX, ROOF PLAN AND ROOF DETAILS.
3. REFER TO FLOOR PLANS FOR PARTITION TYPES.
4. PAINT ALL EXPOSED INTERIOR AND EXTERIOR STRUCTURAL STEEL - SEE FINISH SCHEDULE AND ELEVATIONS.
5. REFER TO FINISH SCHEDULE FOR FLOOR, WALL, AND CEILING FINISHES.
6. SEE ELEVATIONS FOR CMU COLOR AND TEXTURE.
7. ALL PENETRATIONS THROUGH WALLS WITH SOUND INSULATION SHALL BE SEALED TIGHT WITH ACOUSTICAL INSULATION AND SEALANT.
8. ALL FLOOR AND (T.O.) PARAPET ELEVATIONS SHOWN ARE TAKEN FROM ED LEVEL WHICH IS EQUAL 100'-0". CIVIL FINISH FLOOR LEVEL XXXX.XX
9. REFER TO STRUCTURAL DETAILS FOR TYPICAL INTERIOR PARTITION CONNECTIONS.
10. FOR FINISH OF INTERIOR CMU WALLS EXPOSED, SEE FINISH SCHEDULE.

KEYNOTES

1. CONCRETE FOOTINGS, SEE STRUCT. DWGS.
2. 8" CMU WALL, SEE LEGEND FOR TYPE.
3. 3 5/8" MTL STUD WALL FURRING, SEE WALL TYPES.
4. ROOF TRUSS FRAMING, SEE STRUCT. DWGS.
5. STRUCTURAL BENT EDGE PLATE. SEE STRUCT. DWGS
6. STRUCTURAL ROOF DECK, SEE STRUCT. DWGS.
7. PRECAST CONCRETE PARAPET CAP. SEE ROOF DETAILS.
8. TILE WALL BASE, SEE ROOM FINISH SCHEDULE.
9. FRP TEXTURED WALL PANELS, SEE ROOM FINISH SCHEDULE.
10. FINISH GRADE, SEE CIVIL DWGS.
11. CONCRETE FLOOR SLAB, SEE STRUCT. DWGS.
12. WALL PARTITION, SEE FLOOR PLANS FOR WALL TYPES
13. WOOD BASE, SEE FINISH SCHEDULE.
14. ACT LAY IN CEILING, SEE REF. CLG. PLANS
15. 2 1/2" MTL. STUD WALL FURRING, SEE WALL TYPES.
16. 12" CMU WALL, SEE LEGEND FOR TYPE.
17. TPO ROOFING WITH 5" ROOF INSULATION. SEE ROOF DWGS.
18. TILE WALL, SEE ROOM FINISH SCHEDULE.
19. PAINTED GYP. BD. CEILING, SEE ROOM FINISH SCHEDULE.
20. STEEL BEAM, SEE STRUCT. DWGS.
21. RIGID WALL INSULATION, SEE WALL TYPES.
22. METAL PANEL ROOF SOFFIT, SEE ROOF DETAILS.
23. STANDING SEAM & INSULATION. SEE ROOF PLANS.
24. LIGHT FIXTURE, SEE ELECT. DWGS.
25. WOOD CEILING SYSTEM, SEE CEILING AND ROOM FINISH SCHEDULE.
26. WINDOW SYSTEM, SEE WINDOW SCHEDULE.
27. RUBBER BASE, SEE FINISH SCHEDULE.
28. DOOR AND FRAME, SEE DOOR SCHEDULE.
29. PAINTED GYP. BD., SEE FINISH SCHEDULE.
31. TWO STATION LAVATORY
32. SLOPED SIDEWALK, SEE CIVIL DWGS.
33. WATER CLOSET, SEE PLUMBING DWGS.
34. TOILET PARTITION, SEE SPEC'S
35. PAINTED STEEL COLUMN, SEE STRUCTURAL DWGS.
37. 1 1/2" MTL. STUD WALL FURRING, SEE WALL TYPES.
38. WOOD RAIN SCREEN, SEE LEGEND.
39. CMU VENEER ROOF SOFFIT, SEE ROOF DETAILS.
40. BATT INSULATION, SEE SPEC'S.
41. FINISHED FLOORING, SEE ROOM FINISH SCHEDULE
42. WOOD RAIN SCREEN CEILING.
43. ROOF DRAIN, SEE ROOF DETAILS
44. SNOW/ICE GUARD. SEE SPECIFICATIONS.
45. METAL GUTTER W/ SLOPE TO DRAIN PIPES.
46. ROOF CROSSOVER LADDER, SEE ROOF DETAILS.
47. PAINTED GYP. BD. SOFFIT, SEE CEILING DETAILS
48. EXPANSION JOINT, SEE ROOF DETAIL XX/A4.01

tsk
225 South Arlington Avenue
Reno NV, 89501
phone: 775.857.2949
fax: 775.857.2403
www.tska.com

THESE DRAWINGS AND SPECIFICATIONS ARE THE PROPERTY OF TATE SNYDER KIMSEY ARCHITECTS AND MAY NOT BE REPRODUCED OR USED FOR ANY PURPOSE WITHOUT THE ARCHITECTS WRITTEN CONSENT.
AS INSTRUMENTS OF SERVICE, THESE DOCUMENTS ARE NOT FINAL AND READY FOR USE, AND THEREFORE NOT VALID, UNLESS THEY ARE SEALED, SIGNED AND DATED.
Copyright, Ltd 2023

Consultant

PLEASE RECYCLE

Project
CITY OF FERNLEY CRRC

Job No: 21-058.00

Owner
CITY OF FERNLEY

50 % CONSTRUCTION DOCUMENTS

REVISIONS		
REV	DATE	DESCRIPTION

Sheet Title
WALL SECTION

Date: MARCH 21, 2023
Sheet No:
A7.14

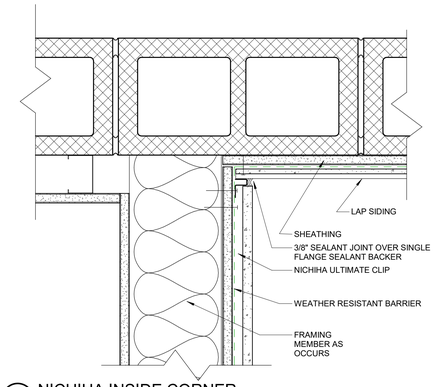

5 NICHIHA INSIDE CORNER
SCALE: 3" = 1'-0"

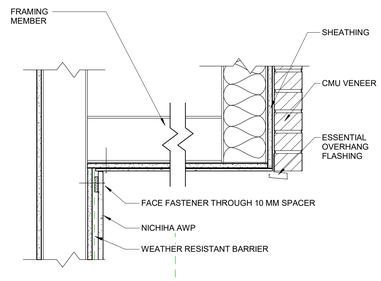

4 SOFFIT @NICHIHA WALL
SCALE: 1 1/2" = 1'-0"

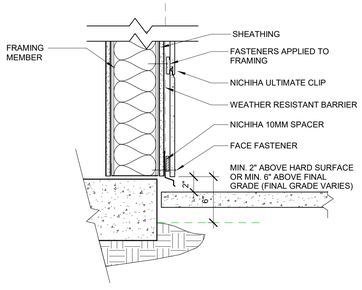

3 NICHIHA WALL & BASE DETAIL
SCALE: 1 1/2" = 1'-0"

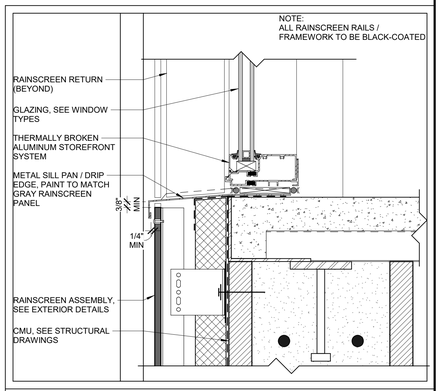

2 RAINSCREEN SYSTEM DETAIL
SCALE: 3" = 1'-0"

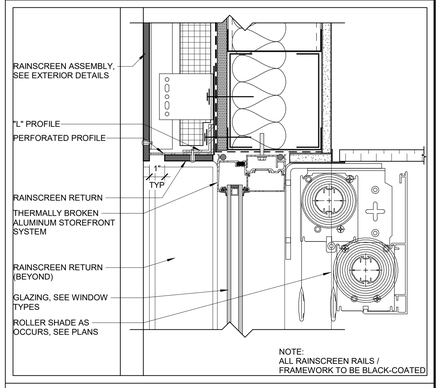

1 RAINSCREEN SYSTEM DETAIL
SCALE: 3" = 1'-0"

tsk
225 South Arlington Avenue
Reno NV, 89501
phone: 775.857.2949
fax: 775.857.2403
www.tska.com

THESE DRAWINGS AND SPECIFICATIONS ARE THE PROPERTY OF TATE SNYDER KIMSEY ARCHITECTS AND MAY NOT BE REPRODUCED OR USED FOR ANY PURPOSE WITHOUT THE ARCHITECTS WRITTEN CONSENT.
AS INSTRUMENTS OF SERVICE, THESE DOCUMENTS ARE NOT FINAL AND READY FOR USE, AND THEREFORE NOT VALID, UNLESS THEY ARE SEALED, SIGNED AND DATED.
Copyright, Ltd 2023

Consultant

PLEASE RECYCLE

Project
CITY OF FERNLEY CRRC

Job No: 21-058.00

Owner
CITY OF FERNLEY

50 % CONSTRUCTION DOCUMENTS

REVISIONS

REV	DATE	DESCRIPTION

Sheet Title
BUILDING DETAILS

Date: MARCH 21, 2023
Sheet No:
A7.31

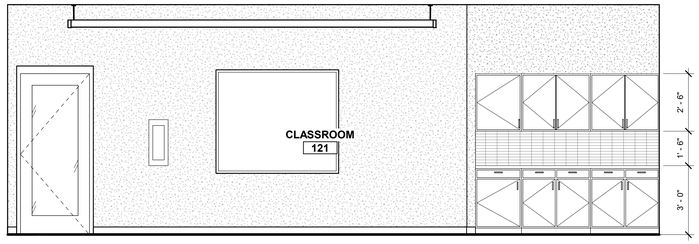

3 CASEWORK AT CLASSROOM 121 SOUTH
SCALE: 3/8" = 1'-0"

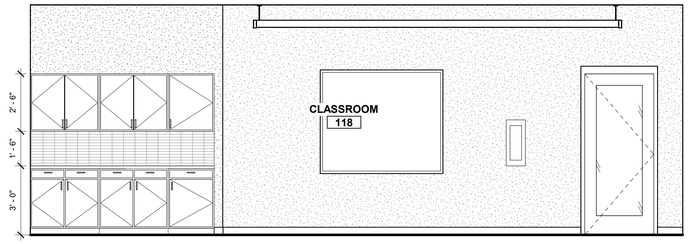

2 CASEWORK AT CLASSROOM 118 SOUTH
SCALE: 3/8" = 1'-0"

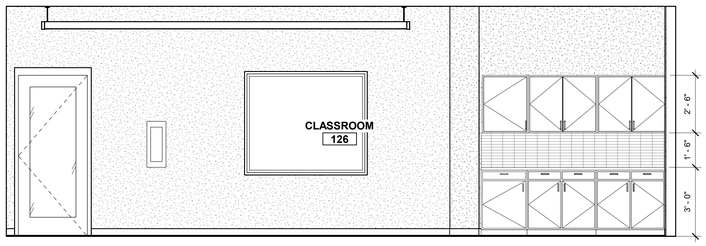

5 CASEWORK AT CLASSROOM 126 NORTH
SCALE: 3/8" = 1'-0"

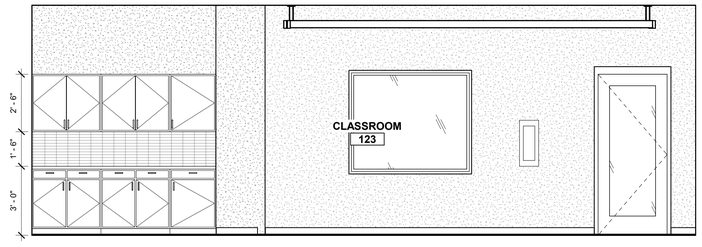

4 CASEWORK AT CLASSROOM 123 NORTH
SCALE: 3/8" = 1'-0"

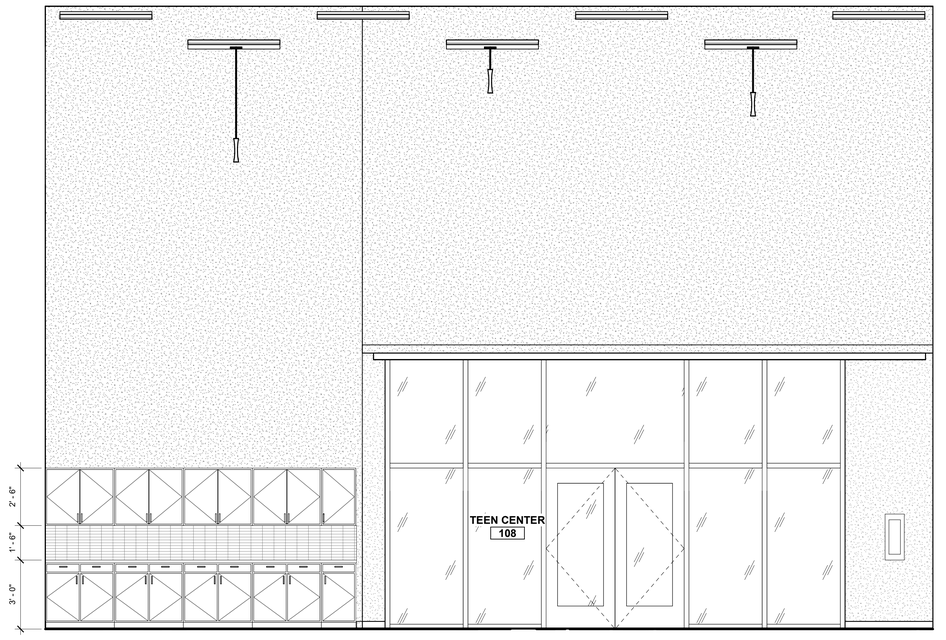

1 CASEWORK AT TEENCENTER 108 SOUTH
SCALE: 3/8" = 1'-0"

GENERAL NOTES

KEYNOTES

LEGEND

tsk
225 South Arlington Avenue
Reno NV, 89501
phone: 775.857.2949
fax: 775.857.2403
www.tska.com

THESE DRAWINGS AND SPECIFICATIONS ARE THE PROPERTY OF TATE SNYDER KIMSEY ARCHITECTS AND MAY NOT BE REPRODUCED OR USED FOR ANY PURPOSE WITHOUT THE ARCHITECTS WRITTEN CONSENT.
AS INSTRUMENTS OF SERVICE, THESE DOCUMENTS ARE NOT FINAL AND READY FOR USE, AND THEREFORE NOT VALID, UNLESS THEY ARE SEALED, SIGNED AND DATED.
Copyright, Ltd 2023

Consultant

PLEASE RECYCLE

Project
CITY OF FERNLEY CRRC

Job No: 21-058.00

Owner
CITY OF FERNLEY

50 % CONSTRUCTION DOCUMENTS

REVISIONS		
REV	DATE	DESCRIPTION

Sheet Title
CASEWORK PLANS AND ELEVATIONS - BASE BID

Date: MARCH 21, 2023
Sheet No:
A8.00

NOTE:

1. PLASTIC LAMINATE ON ALL EXPOSED SURFACES (TYP.)

2. ELEVATION TO TOP OF SINK

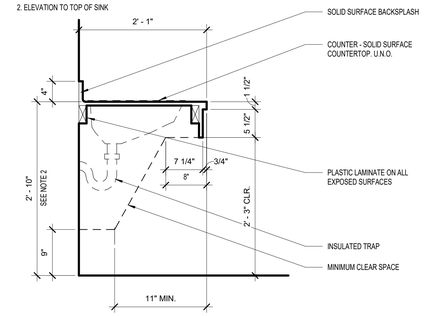

3 ACC SINK BASE CABINET

SCALE: 1" = 1'-0"

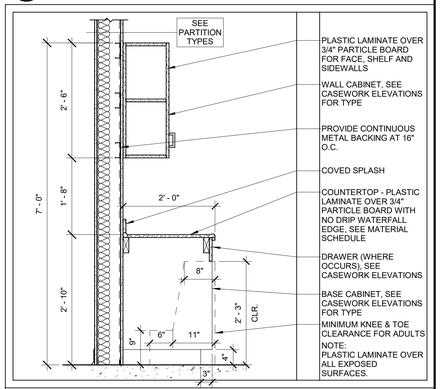

2 CASEWORK SECTION - WORK SURFACE ADA

SCALE: 3/4" = 1'-0"

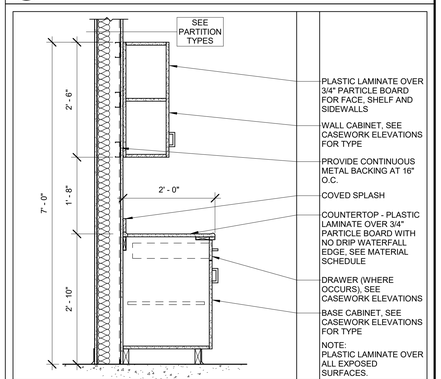

1 CASEWORK SECTION - TYP BASE & UPPER

SCALE: 3/4" = 1'-0"

tsk

225 South Arlington Avenue
Reno NV, 89501
phone: 775.857.2949
fax: 775.857.2403
www.tska.com

THESE DRAWINGS AND SPECIFICATIONS ARE THE PROPERTY OF TATE SNYDER KIMSEY ARCHITECTS AND MAY NOT BE REPRODUCED OR USED FOR ANY PURPOSE WITHOUT THE ARCHITECTS WRITTEN CONSENT. AS INSTRUMENTS OF SERVICE, THESE DOCUMENTS ARE NOT FINAL AND READY FOR USE, AND THEREFORE NOT VALID, UNLESS THEY ARE SEALED, SIGNED AND DATED.

Copyright, Ltd 2023

Consultant

PLEASE RECYCLE

Project

CITY OF FERNLEY CRRC

Job No: 21-058.00

Owner

CITY OF FERNLEY

50 % CONSTRUCTION DOCUMENTS

REVISIONS		
REV	DATE	DESCRIPTION

Sheet Title

CASEWORK SECTIONS & DETAILS

Date: MARCH 21, 2023

Sheet No:

A8.11

ABBREVIATIONS	
AB	ANCHOR BOLT
ABV	ABOVE
ADJ	ADJACENT
AFF	ABOVE FINISHED FLOOR
AFG	ABOVE FINISHED GRADE
AGGR	AGGREGATE
ALT	ALTERNATE
APPROX	APPROXIMATELY
ARCH'L	ARCHITECTURAL
BD	BOARD
BFG	BELOW FINISHED GRADE
BLDG	BUILDING
BLK'G	BLOCKING
BLW	BELOW
BM	BEAM
BN	BOUNDARY NAIL
BO, B.O.	BOTTOM OF
BOT	BOTTOM
BRG	BEARING
BTWN	BETWEEN
CAM	CAMBER
CANT'L	CANTILEVER
CTR	CENTER
C., CL	CENTERLINE
CLR	CLEAR
CMU	CONC MASONRY UNIT
CFS	COLD-FORMED STEEL
COL	COLUMN
CONC	CONCRETE
CONN	CONNECTION
CONST	CONSTRUCTION
CONT	CONTINUOUS
¢	PENNY
D, DIA	DIAMETER
DBL	DOUBLE
DFL	DOUGLAS FIR LARCH
DIAG	DIAGONAL
DTL	DETAIL
DIM	DIMENSION
DN	DOWN
DWG	DRAWING
DWL	DOWEL
EA	EACH
EF	EACH FACE
EJ	EXPANSION JOINT
ELEV	ELEVATION
ELEC	ELECTRICAL
EN	EDGE NAILING
ENCL	ENCLOSE
EOD	EDGE OF DECK
EOR	ENGINEER OF RECORD
EPS	EXPANDED POLYSTYRENI
EQ	EQUAL
EQUIP	EQUIPMENT
EW	EACH WAY
EXIST. (E)	EXISTING
EXP	EXPANSION
EXT	EXTERIOR
EXTD	EXTENDED
FND, FDN	FOUNDATION
FF	FINISH FLOOR
FG	FINISH GRADE
FIN	FINISH
FLR	FLOOR
FRMG	FRAMING
FS	FAR SIDE
FT	FEET OR FOOT
FTG	FOOTING
FURR	FURRING
GA	GAUGE
GN	GENERAL NOTES
GLB	GLUE LAMINATED BEAM
GRND	GROUND
GT	GIRDER TRUSS
GYP	GYPSUM WALLBOARD
HDG	HOT DIP GALVANIZED
HDR	HEADER
HGR	HANGER
HGT	HEIGHT
HORIZ	HORIZONTAL
HT	HIP TRUSS
INSUL	INSULATION
INT	INTERIOR
JT	JOINT
KS	KING STUD
LAM	LAMINATE
LAT	LATERAL
LBS, #	POUNDS
LLV	LONG LEG VERTICAL
LSL	LAM STRAND LUMBER
LT	LIGHT
LVL	LAM VENEER LUMBER
MAS	MASONRY
MAX	MAXIMUM
MECH	MECHANICAL
MFR	MANUFACTURER
MFRD	MANUFACTURED
MIN	MINIMUM
MISC	MISCELLANEOUS
(N)	NEW
N	COMMON NAIL
NO	NUMBER
NS	NEAR SIDE
NTS	NOT TO SCALE
o/	OVER
OC	ON CENTER
OH	OPPOSITE HAND
OPNG	OPENING
OWJ	OPEN WEB JOIST
PFA	POST FROM ABOVE
PSL	PARALLEL STRAND LUMBER
P., PL	PLATE
PLYWD	PLYWOOD
PNL	PANEL
PSI	POUNDS PER SQUARE INCH
PT	POST-TENSIONED
PREFAB	PREFABRICATED
r, RAD	RADIUS
REF	REFERENCE
REINF	REINFORCING
REQ'D	REQUIRED
S	SINKER NAIL
SCHED	SCHEDULE
SF	SQUARE FEET
SECT	SECTION
SEIS	SEISMIC
SHTHG	SHEATHING
SIM	SIMILAR
SPEC	SPECIFICATIONS
SQ	SQUARE
STD	STANDARD
STG'D	STAGGERED
STL	STEEL
STRUCT	STRUCTURAL
SYM	SYMMETRICAL
SWL	SHEAR WALL
T&G	TONGUE AND GROOVE
T&B	TOP AND BOTTOM
THK	THICK
TO, T.O.	TOP OF
TRIM	TRIMMER
TR	TRUSS
TS	TUBE STEEL
TYP	TYPICAL
UNO	UNLESS NOTED OTHERWISE
VERT	VERTICAL
w/	WITH
W/O	WITHOUT
WP	WORKING POINT
WS	WOOD SCREW
WT	WEIGHT

A. GENERAL

1. ALL WORK SHALL CONFORM TO THE MINIMUM STANDARDS OF THE FOLLOWING CODE: THE INTERNATIONAL BUILDING CODE, 2018 EDITION. OTHER REGULATING AGENCIES WHICH HAVE AUTHORITY OVER ANY PORTION OF THE WORK, AND THOSE CODES AND STANDARDS LISTED IN THESE NOTES AND SPECIFICATIONS.
2. THE STRUCTURAL DRAWINGS AND SPECIFICATIONS REPRESENT THE FINISHED STRUCTURE. THEY DO NOT INDICATE THE METHOD OF CONTRUCTION. THE CONTRACTOR SHALL PROVIDE ALL MEASURES NECESSARY TO PROTECT THE STRUCTURE DURING CONSTRUCTION. SUCH MEASURES SHALL INCLUDE, BUT NOT BE LIMITED TO, BRACING, SHORING FOR LOADS DUE TO CONSTRUCTION EQUIPMENT, ETC. OBSERVATION VISITS TO THE SITE BY THE STRUCTURAL ENGINEER SHALL NOT INCLUDE INSPECTIONS OF THE ABOVE ITEMS.
3. THE CONTRACTOR SHALL VERIFY ALL DIMENSIONS PRIOR TO STARTING CONSTRUCTION. THE ARCHITECT SHALL BE NOTIFIED OF ANY DISCREPANCIES OR INCONSISTENCIES.
4. DIMENSIONS SHALL TAKE PRECEDENCE OVER THE SCALE SHOWN ON DRAWINGS.
5. NOTES AND DETAILS ON PLANS SHALL TAKE PRECEDENCE OVER GENERAL NOTES AND TYPICAL DETAILS.
6. SEE ARCHITECTURAL PLANS FOR THE FOLLOWING:
   A. SIZE AND LOCATION OF ALL DOOR AND WINDOW OPENINGS, EXCEPT AS NOTED.
   B. SIZE AND LOCATION OF ALL INTERIOR AND EXTERIOR NON-BEARING PARTITIONS.
   C. SIZE AND LOCATION OF ALL CONCRETE CURBS, FLOOR DRAINS, SLOPES, DEPRESSED AREAS, CHANGES IN LEVEL, CHAMFER, GROOVES, INSERTS, ETC.
   D. SIZE AND LOCATION OF FLOOR AND ROOF OPENINGS, (EXCEPT AS SHOWN).
   E. FLOOR AND ROOF FINISHES.
   F. STAIR FRAMING AND DETAILS, (EXCEPT AS SHOWN).
   G. DIMENSIONS NOT SHOWN ON STRUCTURAL PLANS.
7. COORDINATE OR VERIFY WITH MECHANICAL PLANS, PLUMBING, AND ELECTRICAL PLANS FOR THE FOLLOWING:
   A. PIPE RUNS, SLEEVES, HANGERS, TRENCHES, WALL AND SLAB OPENINGS, ETC., (EXCEPT AS SHOWN OR NOTED).
   B. ELECTRICAL CONDUIT RUNS, BOXES, OUTLETS IN WALLS AND SLABS.
   C. CONCRETE INSERTS FOR ELECTRICAL, MECHANICAL, OR PLUMBING FIXTURES.
   D. SIZE AND LOCATION OF MACHINE EQUIPMENT BASES, OR ANCHOR BOLTS FOR MOUNTS.
   E. SIZE AND LOCATION OF ALL MECHANICAL UNITS.
8. OPENINGS, POCKETS, ETC. LARGER THAN 6 INCHES SHALL NOT BE PLACED IN SLABS, DECKS, BEAMS, JOISTS, COLUMNS, WALLS, ETC. UNLESS SPECIFICALLY DETAILED ON THE STRUCTURAL PLANS. CONTRACTOR TO SHOW ALL 6" OR GREATER OPENINGS ON STRUCTURAL MASONRY ELEVATION SHEETS TO SUBMIT TO ENGINEER FOR APPROVAL. CONTACT THE STRUCTURAL ENGINEER IF ANY STRUCTURAL ELEMENTS REQUIRE OPENINGS NOT SHOWN ON THESE PLANS AND ARE LARGER THAN 6" PRIOR TO MAKING MODIFICATIONS.
9. ASTM SPECIFICATIONS NOTED SHALL BE THE LATEST REVISION.
10. THE CONTRACTOR SHALL INVESTIGATE THE SITE DURING CLEARING AND EARTHWORK OPERATIONS FOR FILLED EXCAVATIONS OR BURIED STRUCTURES SUCH AS CESSPOOLS, CISTERNS, FOUNDATIONS, ETC. IF ANY SUCH STRUCTURES ARE FOUND, THE STRUCTURAL ENGINEER SHALL BE NOTIFIED IMMEDIATELY.
11. CONSTRUCTION MATERIALS SHALL BE SPREAD OUT IF PLACED ON FLOORS OR ROOF. LOAD SHALL NOT EXCEED THE DESIGN LIVE LOAD PER SQUARE FOOT. PROVIDE ADEQUATE SHORING AND/OR BRACING WHERE STRUCTURE HAS NOT ATTAINED DESIGN STRENGTH.
12. WHERE THE LONGEST HORIZONTAL CELLING DIMENSION IS EQUAL TO OR GREATER THAN 20'-0", IT IS RECOMMENDED THAT RESILIENT CHANNEL BE USED TO HELP LIMIT DRYWALL CRACKING.
13. THE FOLLOWING ITEMS ARE CONSIDERED TO BE DEFERRED SUBMITTALS PER SECTION 107.3.4.1 OF THE INTERNATIONAL BUILDING CODE, 2018 EDITION AND SHALL BE SUBMITTED TO THE REGISTERED DESIGN PROFESSIONAL IN RESPONSIBLE CHARGE FOR REVIEW, WHO SHALL REVIEW THEM, AND FORWARD THEM TO THE BUILDING OFFICIAL WITH A NOTIFICATION INDICATING THAT THE DEFERRED SUBMITTAL DOCUMENTS HAVE BEEN REVIEWED AND FOUND TO BE IN GENERAL CONFORMANCE TO THE DESIGN OF THE BUILDING. THE DEFERRED SUBMITTAL ITEMS SHALL NOT BE INSTALLED UNTIL THE DEFERRED SUBMITTAL DOCUMENTS HAVE BEEN APPROVED BY THE BUILDING OFFICIAL.
   A. OPEN WEB STEEL JOISTS

B. DESIGN CRITERIA

GRAVITY LOAD	LIVE LOAD	DEAD LOAD
ROOF LOAD	20 PSF	20 PSF
ROOF SNOW LOAD	8 PSF	

* SEE FRAMING NOTES FOR SPECIAL LOADING CONDITIONS

WIND	
BASIC WIND SPEED	135 MPH
WIND RISK CATEGORY	IV
WIND EXPOSURE CATEGORY	C
INTERNAL PRESSURE COEFFICIENT	+/-0.18
COMPONENT & CLADDING	
ROOF	SEE ROOF UPLIFT DIAGRAMS
WALL	+43.0 PSF OR -47.0 PSF

* HIGHER LOADING USED AT CORNERS AND EDGES

SEISMIC	
SEISMIC RISK CATEGORY	IV
SEISMIC IMPORTANCE, I_E	1.5
MAPPED SPECTRAL RESPONSE ACCELERATIONS	S_S=1.539 & S_1=0.522
SPECTRAL RESPONSE COEFFICIENTS	S_{DS}=1.076 & S_{D1}=0.592
SITE CLASS	D
LATERAL FORCE RESISTING SYSTEM, NORTH/SOUTH	SPECIAL REINFORCED MASONRY SHEAR WALLS, R=5
LATERAL FORCE RESISTING SYSTEM, EAST/WEST	SPECIAL REINFORCED MASONRY SHEAR WALLS, R=5
SEISMIC RESPONSE COEFFICIENT, C_S	0.323
LATERAL FORCE RESISTING SYSTEM, NORTH/SOUTH (GYMNASIUM)	SPECIAL REINFORCED MASONRY SHEAR WALLS, R=5
SEISMIC RESPONSE COEFFICIENT, C_S	0.323
LATERAL FORCE RESISTING SYSTEM, EAST/WEST (GYMNASIUM)	STEEL SPECIAL MOMENT FRAMES, R=8
SEISMIC RESPONSE COEFFICIENT, C_S	0.202
DESIGN BASE SHEAR	C_S x DEAD WEIGHT (W)
ANALYSIS PROCEDURE	EQUIVALENT LATERAL FORCE
SEISMIC DESIGN CATEGORY	D

C. FOUNDATION

1. THE FOUNDATION DEPICTED HEREIN HAS BEEN DESIGNED IN ACCORDANCE WITH RECOGNIZED ENGINEERING PRACTICE FOR SOIL CONDITIONS AS CLASSIFIED BY THE PROJECT GEOTECHNICAL REPORT. (THE GEOTECHNICAL REPORT):
   - CONSULTANT: LUMOS & ASSOCIATES, INC.
   - FILE: 10683.000
   - DATED: APRIL 2022
2. FOOTINGS ARE DESIGNED BASED ON AN ALLOWABLE SOIL PRESSURE OF 1500 PSF PER THE GEOTECHNICAL REPORT. ALLOWABLE SOIL PRESSURE MAY BE INCREASED BY 1/3 FOR TOTAL LOADS INCLUDING WIND OR SEISMIC. FRICTION COEFFICIENT = 0.35. AT REST AND PASSIVE EQUIVALENT FLUID PRESSURES ARE 60 AND 300 PCF, RESPECTIVELY.
3. SITE PREPARATION SHALL CONFORM TO THE REQUIREMENTS IN THE GEOTECHNICAL REPORT.
4. SOILS PREPARATION AND FOUNDATION CONSTRUCTION SHALL CONFORM TO THE REQUIREMENTS OF THE GEOTECHNICAL REPORT. ALL FOUNDATIONS SHALL BE PLACED ON A MINIMUM OF 24 INCHES OF PROPERLY MOISTURE CONDITIONED AND COMPACTED SUITABLE NATIVE SOILS OR PROPERLY PREPARED STRUCTURAL FILL. ALL INTERIOR SLABS ON GRADE SHALL BE PLACED ON A MINIMUM TYPE II, CLASS B AGGREGATE BASE COMPACTED TO A MINIMUM OF 95% AND PLACED ON 24 INCHES OF PROPERLY MOISTURE CONDITIONED AND COMPACTED SUITABLE NATIVE SOILS OR PROPERLY PREPARED STRUCTURAL FILL.
5. SEE ARCHITECTURAL AND STRUCTURAL DRAWINGS FOR EXACT LOCATION OF BULKHEADS AND OPENINGS, ETC. ARCHITECTURAL AND STRUCTURAL DRAWINGS FOR EXACT LOCATION OF BULKHEADS AND OPENINGS, ETC.
6. THE CONTRACTOR SHALL PROVIDE FOR PROPER DE-WATERING OF EXCAVATIONS FROM SURFACE WATER, GROUND WATER, SEEPAGE, ETC. (FOOTINGS SHALL NOT BE PLACED UNDER WATER).
7. FOOTINGS SHALL BE PLACED ACCORDING TO DEPTHS SHOWN ON THE STRUCTURAL PLANS. ALL ABANDONED FOOTINGS, UTILITIES, ETC. THAT INTERFERE WITH NEW CONSTRUCTION SHALL BE REMOVED.
8. CONCRETE PLACEMENT SHALL BE IN ONE CONTINUOUS OPERATION UNLESS OTHERWISE SPECIFIED AND SLAB SURFACE SHALL BE CURED WITH HUNTS COMPOUND OR EQUAL.
9. FOOTING BACKFILL AND UTILITY TRENCH BACKFILL WITHIN BUILDING AREA SHALL BE PER THE REQUIREMENTS OF THE GEOTECHNICAL REPORT. FLOODING WILL NOT BE PERMITTED.
10. STOOPS, PORCHES, OR OTHER ATTACHMENT SHALL BE CAST INDEPENDENT OF THE CONCRETE FOUNDATION SLAB, UNO. PROVIDE CONSTRUCTION JOINTS WHERE SHOWN ON THE DRAWINGS.

D. CONCRETE

1. ALL PHASES OF WORK PERTAINING TO THE CONCRETE CONSTRUCTION SHALL CONFORM TO THE "BUILDING CODE REQUIREMENTS FOR REINFORCED CONCRETE" (ACI 318 LATEST ADOPTED EDITION), WITH MODIFICATIONS AS NOTED IN THE DRAWINGS AND SPECIFICATIONS.
2. REINFORCED CONCRETE DESIGN IS BY THE "ULTIMATE STRENGTH DESIGN METHOD", ACI 318-14. SCHEDULE OF STRUCTURAL CONCRETE 28-DAY COMPRESSIVE STRENGTH AND TYPES:

LOCATION IN STRUCTURE	STRENGTH	AGGREGATE	ENTRAINED AIR %
SLAB ON GRADE	3500 PSI	3/4" STONE	NONE
FOOTINGS*	3500 PSI	3/4" STONE	5% +/- 1 1/2%
FOUNDATION WALLS	4500 PSI	3/4" STONE	6% +/- 1 1/2%
EXTERIOR CONCRETE**	4500 PSI	3/4" STONE*	6% +/- 1 1/2%

* FOUNDATION WALLS CONCRETE MIXTURE CAN BE USED FOR FOOTINGS AT CONTRACTOR'S OPTION
**INCLUDE 1.5 LB/CY OF FIBERMESH 150 POLYPROPYLENE FIBERS OR APPROVED EQUAL.

3. A MINIMUM OF THREE (3) CYLINDERS FOR EVERY 100 YARDS OF CONCRETE SHALL BE TAKEN TO DETERMINE CONCRETE STRENGTH.
4. CONCRETE MIX DESIGN SHALL BE SUBMITTED TO THE STRUCTURAL ENGINEER FOR APPROVAL WITH THE FOLLOWING REQUIREMENTS:
   A. COMPRESSIVE STRENGTH AT AGE 28 DAYS AS SPECIFIED ABOVE.
   B. AGGREGATE SUBMITTAL: 3/4" MAXIMUM SIZE CONFORMING TO ASTM C-33.
   C. CEMENT: ASTM C-150, TYPE II PORTLAND CEMENT.
   D. MAXIMUM SLUMP: 3 INCHES, ADDITIONAL WORKABILITY MAY BE ACHIEVED WITH AN APPROVED ADMIXTURE THAT DOES NOT PROMOTE SHRINKAGE OF THE CONCRETE.
   E. NO ADDITIONAL ADMIXTURES, EXCEPT FOR ENTRAINED AIR, OR AS SPECIFIED OR APPROVED BY THE STRUCTURAL ENGINEER.
   F. MAXIMUM WATER/CEMENT RATIO SHALL BE 0.45, U.N.O.
      a. FOR SLAB ON GRADE AND SLAB ON METAL DECK ONLY, MAXIMUM WATER/CEMENT RATIO SHALL BE 0.50.
   G. CONCRETE SHALL BE 142 +/- 7 LBS/CU. FT.
5. CONCRETE MIXING OPERATIONS, ETC. SHALL CONFORM TO ASTM C-94.
6. PLACEMENT OF CONCRETE SHALL CONFORM TO ACI STANDARD 614.
7. CLEAR COVERAGE OF CONCRETE OVER OUTER REINFORCING BARS SHALL BE AS FOLLOWS, UNO:
   A. CONCRETE POURED DIRECTLY AGAINST EARTH: 3 INCHES CLEAR
   B. STRUCTURAL SLABS: 3/4 INCHES CLEAR (TOP AND BOTTOM)
   C. FORMED CONCRETE WITH EARTH BACKFILL: 2 INCHES CLEAR
8. ALL REINFORCING BARS, HOLD DOWN BOLTS AND STRAPS, AND OTHER CONCRETE INSERTS SHALL BE WELL SECURED IN POSITION PRIOR TO PLACING CONCRETE.
9. PROVIDE SLEEVES FOR PLUMBING AND ELECTRICAL OPENINGS IN CONCRETE BEFORE PLACING. DO NOT CUT ANY REINFORCING WHICH MAY CONFLICT. CORING IN CONCRETE IS NOT PERMITTED EXCEPT AS SHOWN. NOTIFY THE STRUCTURAL ENGINEER IN ADVANCE OF CONDITIONS NOT SHOWN ON THE DRAWINGS.
10. CONDUIT OR PIPE SIZE (O.D.) SHALL NOT EXCEED 30% OF SLAB THICKNESS AND SHALL BE PLACED UNDER CONCRETE, UNLESS SPECIFICALLY DETAILED OTHERWISE. CONCENTRATIONS OF CONDUITS OR PIPES SHALL BE AVOIDED EXCEPT WHERE DETAILED OPENINGS ARE PROVIDED.
11. MODULUS OF ELASTICITY OF CONCRETE, WHEN TESTED IN ACCORDANCE WITH ASTM C-460, SHALL BE AT LEAST THE VALUE GIVEN BY THE EQUATIONS IN SECTION 19.2.2.1 OF ACI 318 FOR THE SPECIFIED 28-DAY STRENGTH.
12. ALL CONCRETE SLABS SHALL USE VC-5 CURING COMPOUND MANUFACTURED BY SINAK, BLANKET CURED WITH MOISTURE-RETAINING SHEET, OR AN APPROVED EQUAL.
13. SPECIAL INSPECTOR TO VERIFY AND SIGN ALL BATCH TICKETS AND PRODUCE A POUR MAP INDICATING PLACEMENT OF EACH BATCH FOR SLAB ON GRADE AND SLAB ON METAL DECK PRIOR TO PLACEMENT.

E. REINFORCING STEEL

1. REINFORCING BARS SHALL CONFORM TO THE REQUIREMENTS OF ASTM A-615 GRADE 60.
2. WELDED REINFORCING BARS SHALL CONFORM TO THE REQUIREMENTS OF ASTM A-706 GRADE 60.
3. ALL REINFORCING BARS SHALL BE MADE COLD.
4. MINIMUM LAP OF THE WELDED WIRE FABRIC SHALL BE 6 INCHES OR ONE AND ONE HALF SQUARES WHICHEVER IS GREATER.
5. ALL BARS SHALL BE MARKED SO THEIR IDENTIFICATION CAN BE MADE WHEN THE FINAL IN-PLACE INSPECTION IS MADE.
6. REBAR SPLICES ARE TO BE CLASS "B" (UNO). MAINTAIN 2 BAR DIA CLEAR SPACE BETWEEN ADJACENT SPLICES

REBAR SIZE	#3	#4	#5	#6	#7	#8	#9	#10
MINIMUM LAP LENGTH, INCHES, CONCRETE	22	29	36	43	68	78	88	98
MINIMUM LAP LENGTH, INCHES, MASONRY	13	22	35	64	87	131	NA	NA
STD. HOOK LENGTH, INCHES	4 1/2	6	7 1/2	9	10 1/2	12	13 1/2	15 1/2



7. REINFORCING SPLICES SHALL BE MADE ONLY WHERE INDICATED ON THE DRAWINGS.
8. DOWELS BETWEEN FOOTINGS AND WALLS OR COLUMNS SHALL BE THE SAME GRADE, SIZE AND SPACING OR NUMBER AS THE VERTICAL REINFORCING, RESPECTIVELY.

F. CONCRETE MASONRY (CONCRETE BLOCK)

1. MASONRY UNITS SHALL BE MEDIUM WEIGHT UNITS CONFORMING TO THE LATEST ASTM DESIGNATION C-90 AND THE QUALITY CONTROL STANDARDS OF THE CONCRETE MASONRY ASSOCIATION OF CALIFORNIA AND NEVADA.
   A. CMU BLOCK STRENGTH SHALL BE:
      a. 8" BLOCK: 2000 PSI
      b. 12" BLOCK: 3250 PSI
2. MASONRY STRENGTH SHALL BE:
   A. 8" BLOCK: f'm = 2000 PSI
   B. 12" BLOCK: f'm = 2500 PSI
3. MASONRY UNITS SHALL BE CONSTRUCTED USING TYPE II CEMENT.
4. PORTLAND CEMENT SHALL CONFORM TO ASTM DESIGNATION C-150 AND BE AS SPECIFIED FOR CONCRETE.
5. MORTAR SHALL CONFORM TO THE REQUIREMENTS OF TMS-602 TABLE SC-1. TYPE M OR S.
6. GROUT SHALL CONFORM TO REQUIREMENTS OF ASTM C476 FOR COARSE GROUT. USE SUFFICIENT WATER FOR GROUT TO FLOW INTO ALL VOIDS OF THE MASONRY WITHOUT SEGREGATION. GROUT SHALL ATTAIN A MINIMUM COMPRESSIVE STRENGTH AT 28 DAYS NOT LESS THAN THE SPECIFIED MASONRY STRENGTH f'm PER ITEM 2 (TWO) ABOVE.
7. PROVIDE A MINIMUM OF 1/2" GROUT BETWEEN MAIN REINFORCING AND MASONRY UNITS. MORTAR FIN PROJECTIONS LARGER THAN 1/4" FROM INTERIOR FACE OF CMU BLOCK TO BE KNOCKED OFF PRIOR TO GROUTING.
8. LOW LIFT CONSTRUCTION, MAXIMUM GROUT POUR HEIGHT IS 5'-4" U.N.O.
9. CELLS SHALL BE IN VERTICAL ALIGNMENT. DOWELS IN FOOTINGS SHALL BE SET TO ALIGN WITH CORES CONTAINING REINFORCING STEEL.
10. REFER TO ARCHITECTURAL DRAWINGS FOR SURFACE AND HEIGHT OF UNITS, LAYING PATTERN AND JOINT TYPE.
11. PROVIDE LEVEL 2 SPECIAL INSPECTION IN ACCORDANCE WITH TMS 402-16 SECTION 3.1.2.2a.
12. MASONRY LAP SPLICES SHALL BE A MINIMUM OF 48 BAR DIAMETERS OR THE VALUE SHOWN IN SECTION D, WHICHEVER IS LARGER.
13. ONE SET OF THREE MASONRY PRISMS TO BE BUILT AND TESTED PER ASTM C131, STANDARD TEST METHOD FOR COMPRESSIVE STRENGTH OF MASONRY PRISMS, FOR EACH VARIETY OF MASONRY BLOCK (8816,12816, SHOT BLAST, PRECISION, ETC) PRIOR TO CONSTRUCTION.

G. STRUCTURAL STEEL

1. HOT-ROLLED STRUCTURAL STEEL SHAPES SHALL BE PER ASTM A992. EXCEPT ANGLES AND CHANNELS SHALL BE PER ASTM A36, UNO.
2. STRUCTURAL PIPE SHALL BE PER ASTM A53 GRADE B, UNO.
3. STRUCTURAL HSS SHAPES SHALL BE PER ASTM A500 GRADE C, UNO.
4. STRUCTURAL PLATE STEEL SHALL BE PER ASTM A36, UNO.
5. NUTS AND BOLTS IN STRUCTURAL STEEL CONNECTIONS SHALL BE PER ASTM F1852 (DESIGNATED AS A325N OR HIGH STRENGTH BOLT ON THE DRAWINGS), WITH HARDENED WASHERS UNO. DESIGN IS BASED UPON BEARING TYPE CONNECTIONS WITH THREADS NOT EXCLUDED. PERIODIC SPECIAL INSPECTION REQUIRED. UNO, CONTACT FACES OF STEEL AT CONNECTIONS WHERE HIGH-STRENGTH BOLTS ARE USED SHALL NOT BE PAINTED. HIGH STRENGTH BOLTS SHALL BE TENSION CONTROL TO ENSURE PROPER INSTALLATION, UNO.
6. ANCHOR BOLTS SHALL BE PER ASTM F1554 GR. 36, UNO.
7. HEADED STUDS SHALL BE NELSON STUD ANCHORS (NSA) BY TRW OR APPROVED EQUAL. UNO, AND SHALL BE INSTALLED PER MANUFACTURER'S REQUIREMENTS.
8. WELDS SHALL BE BY E70XX, LOW HYDROGEN ELECTRODES. ALL WELDING SHALL CONFORM TO THE AMERICAN WELDING SOCIETY'S SPECIFICATIONS FOR THE MATERIAL BEING WELDED AND ALL WELDING TO BE PERFORMED BY ONLY AWS CERTIFIED WELDERS.
9. WELDS DESIGNATED AS DEMAND CRITICAL SHALL BE MADE WITH FILLER METALS MEETING THE REQUIREMENTS OF AWS D1.8/D1.8M CLAUSES 6.1, 6.2, AND 6.3. FILLER METAL FOR DEMAND CRITICAL WELDS SHALL HAVE A MINIMUM CHARPY V-NOTCH (CVN) TOUGHNESS OF 40 FT-LBS AT 70° F OR LOWER.
10. ALL FIELD WELDS SHALL HAVE SPECIAL INSPECTION.
11. PROVIDE SPECIAL INSPECTION IN ACCORDANCE WITH IBC 1705.2.1.
12. ALL STRUCTURAL STEEL WORK SHALL BE SHOP PAINTED AND TOUCHED UP IN THE FIELD AFTER ERECTION EXCEPT WHERE STEEL IS TO BE EMBEDDED IN CONCRETE, FIREPROOFED, OR WHERE REQUIRED FOR SPECIAL CONNECTIONS. PROVIDE 3" MINIMUM CONCRETE COVER FOR ALL STEEL EXPOSED TO EARTH.

H. METAL DECKING

1. METAL DECK SHALL CONFORM TO THE REQUIREMENTS OF THE STEEL DECK INSTITUTE.
2. TYPE AND GAUGE OF METAL DECK SHALL BE PER THE FRAMING PLANS AND NOTES. METAL DECK FINISH PER ARCHITECTURAL DRAWINGS.
3. DECKING SHALL BE ATTACHED TO STEEL SUPPORTS AND HAVE SIDE LAP ATTACHMENTS AS SHOWN ON THESE DRAWINGS.
4. DECK WELDING SHALL BE DONE IN ACCORDANCE WITH THE AMERICAN WELDING SOCIETY'S SPECIFICATIONS AND SHALL BE PERFORMED BY WELDERS EXPERIENCED IN METAL DECK WELDING.
5. DECKING SHALL BEAR NO LESS THAN 2" ON STEEL SUPPORTS AND SHALL SPAN CONTINUOUSLY OVER NO LESS THAN TWO CONSECUTIVE SPANS.
6. ITEMS SUSPENDED FROM FLOOR AND ROOF DECK SYSTEMS SHALL CONFORM TO THE APPROPRIATE TYPICAL DETAILS. IF ALTERNATE SUPPORT SYSTEMS FOR SUSPENDED ITEMS ARE DESIRED, THE CONTRACTOR SHALL SUBMIT SHOP DRAWINGS TO THE ARCHITECT FOR APPROVAL. ALTERNATE SUPPORT FRAMING SHALL CONNECT TO APPROPRIATE STEEL FRAMING AND SHALL NOT CONNECT TO METAL DECK.
7. IT SHALL BE THE CONTRACTOR'S RESPONSIBILITY TO PROVIDE SHORING AS REQUIRED TO ENSURE THAT CONSTRUCTION LOADS PLACED ON PLAIN OR COMPOSITE METAL DECK DO NOT EXCEED THE DECK LOAD BEARING CAPACITY.
8. HEAVY MOVING CONSTRUCTION LOADS, SUCH AS THOSE EXERTED BY MECHANICAL LIFT, ON COMPOSITE METAL DECK WITH CONCRETE FILL SHALL BE A MAXIMUM OF 3000 LBS AND PREVENTED FROM OVERLOADING ANY OPEN BAY AREAS. IF ANY LIFTS ARE USED BY THE CONTRACTOR ON THE SLAB ON METAL DECK, THE CONTRACTOR MUST PROVE TO THE OWNER THAT ANY CRACKING IN THE SLAB ON METAL DECK WAS NOT CREATED BY THE USE OF THE LIFT.
9. SHOP DRAWINGS SHALL BE SUBMITTED TO THE ARCHITECT FOR APPROVAL PRIOR TO ANY FABRICATION.
10. VENTED DECK SHALL NOT BE ALLOWED ON THIS PROJECT.

I. COLD-FORMED STEEL

1. COLD-FORMED STEEL FRAMING SHALL CONFORM TO THE REQUIREMENTS OF THE 2016 EDITION OF THE NORTH AMERICAN SPECIFICATION FOR THE DESIGN OF COLD-FORMED STEEL STRUCTURAL MEMBERS (AISI). THE STEEL STUD MANUFACTURERS ASSOCIATION (SSMA STANDARDS), AND REQUIREMENTS AS STATED IN THE FRAMING NOTES.
2. COLD-FORMED STEEL STUDS AND JOISTS SHALL BE STRUCTURAL GRADE PER ASTM A653 AND THE FOLLOWING YIELD STRENGTHS:
   A. ALL MATERIALS USED IN INTERIOR APPLICATIONS SHALL BE 33 KSI, U.N.O.
   B. ALL MATERIALS USED IN EXTERIOR APPLICATIONS SHALL BE 50 KSI.
3. SELF-DRILLING SCREWS TO BE HILTI KWIK-PRO OR KWIK-FLEX SCREWS OR APPROVED EQUAL. #6 SCREWS MINIMUM TO BE USED WHERE NOT SPECIFICALLY NOTED ON THESE PLANS. PLACE IN ACCORDANCE WITH ESR-2196. TYPICAL FASTENER SIZES NOTED IN THE DRAWINGS:
   A. #6 SCREWS = 0.138" DIA. x 1 1/4" MINIMUM LENGTH
   B. #8 SCREWS = 0.164" DIA. x 1 1/4" MINIMUM LENGTH
4. SHOT PINS SHALL BE HILTI X-U, 0.157" MINIMUM DIA., OR EQUAL TO BE APPROVED BY THE EOR. INSTALL PER MANUFACTURER AND ESR-2269 OR AS OTHERWISE INDICATED IN THE DETAILS.
5. WALL TRACK SHALL BE UNPUNCHED WITH GAUGE TO MATCH STUD FRAMING (UNO). MINIMUM SIZE TO BE 362T125-33.
6. UTILITY PUNCHOUT HOLES IN STUDS SHALL BE LOCATED AWAY FROM CONNECTIONS UNLESS SPECIFICALLY DETAILED.
7. OPENINGS IN STUD WEBS OTHER THAN STANDARD HOLES PUNCHED BY THE MANUFACTURER ARE PROHIBITED UNLESS SPECIFICALLY DETAILED.

J. OPEN WEB STEEL JOISTS

1. ALL OPEN WEB STEEL JOISTS SHALL CONFIRM TO THE STANDARD SPECIFICATIONS OF THE STEEL JOIST INSTITUTE.
2. ALL OPEN WEB JOISTS SHALL HAVE BRIDGING AS SHOWN ON THE DRAWINGS AND AS RECOMMENDED BY THE STEEL JOIST INSTITUTE.
3. ALL OPEN WEB JOISTS SHALL BE WELDED OR BOLTED TO SUPPORTS AS DETAILED ON THE DRAWINGS AND DESIGNED FOR LOADING TO THE CONNECTION WHERE INDICATED ON PLANS AND DETAILS.
4. ALL OPEN WEB JOISTS SHALL BE SHOP PAINTED AND TOUCHED UP IN THE FIELD AFTER ERECTION, EXCEPT AT LOCATIONS TO RECEIVE FIREPROOFING.
5. ALL OPEN WEB JOISTS ARE TO BE DESIGNED BY THE MANUFACTURER TO SUPPORT THE DESIGN LOADS PROVIDED ON THESE DRAWINGS. THE CONTRACTOR SHALL COORDINATE LOADS AND DIMENSIONS AS NECESSARY.
6. SHOP DRAWINGS AND STAMPED ENGINEERING CALCULATIONS OF ALL OPEN WEB JOISTS SHALL BE SUBMITTED TO THE ARCHITECT FOR APPROVAL PRIOR TO ANY FABRICATION.

M. SHOP DRAWINGS

1. SHOP DRAWINGS SHALL BE SUBMITTED FOR ALL STRUCTURAL ITEMS IN ADDITION TO ITEMS REQUIRED BY ARCHITECTURAL SPECIFICATIONS.
2. THE CONTRACTOR SHALL REVIEW ALL SHOP DRAWINGS PRIOR TO SUBMITTAL. ITEMS NOT IN ACCORDANCE WITH CONTRACT DRAWINGS SHALL BE FLAGGED FOR REVIEW.
3. VERIFY ALL DIMENSIONS WITH ARCHITECTURAL DRAWINGS.
4. ANY CHANGES, SUBSTITUTIONS, OR DEVIATIONS FROM ORIGINAL STRUCTURAL DRAWINGS SHALL BE RED-LINED OR FLAGGED BY SUBMITTING PARTIES.
5. THE STRUCTURAL ENGINEER HAS THE RIGHT TO APP

2018 IBC TABLE 1705.3
REQUIRED SPECIAL INSPECTIONS AND TESTS OF CONCRETE CONSTRUCTION

TYPE	CONTINUOUS SPECIAL INSPECTION	PERIODIC SPECIAL INSPECTION	REFERENCED STANDARD	IBC REFERENCE
1. INSPECT REINFORCEMENT, INCLUDING PRESTRESSING TENDONS, AND VERIFY PLACEMENT.	--	--	ACI 318: CH. 20, 25.2, 25.3, 26.6.1-26.6.3	1908.4
2. REINFORCING BAR WELDING: A. VERIFY WELDABILITY OF REINFORCING BARS OTHER THAN ASTM 706; B. INSPECT SINGLE-PASS FILLET WELDS, MAXIMUM 5/16"; AND C. INSPECT ALL OTHER WELDS.	-- X	X X X	AWS D1.4 ACI 318: 26.6.4	--
3. INSPECT ANCHORS CAST IN CONCRETE.	--	X	ACI 318: 17.8.2	--
4. INSPECT ANCHORS POST-INSTALLED IN HARDENED CONCRETE MEMBERS. A. ADHESIVE ANCHORS INSTALLED IN HORIZONTALLY OR UPWARDLY INCLINED ORIENTATIONS TO RESIST SUSTAINED TENSION LOADS. B. MECHANICAL ANCHORS AND ADHESIVE ANCHORS NOT DEFINED IN 4.A.	X	 X	ACI 318: 17.8.2.4 ACI 318: 17.8.2	--
5. VERIFY USE OF REQUIRED DESIGN MIX	--	X	ACI 318: CH. 19, 26.4.3, 26.4.4	1904.1, 1904.2, 1908.2, 1908.3
6. PRIOR TO CONCRETE PLACEMENT, FABRICATE SPECIMENS FOR STRENGTH TESTS, PERFORM SLUMP AND AIR CONTENT TESTS, AND DETERMINE THE TEMPERATURE OF THE CONCRETE.	X	--	ASTM C172 ASTM C31 ACI 318: 26.5, 26.12	1908.10
7. INSPECT CONCRETE AND SHOTCRETE PLACEMENT FOR PROPER APPLICATION TECHNIQUES.	--	X	ACI 318: 26.5	1908.6, 1908.7, 1908.8
8. VERIFY MAINTENANCE OF SPECIFIED CURING TEMPERATURE AND TECHNIQUES	--	X	ACI 318:26.5.3-26.5.5	1908.9
9. INSPECT PRESTRESSED CONCRETE FOR: A. APPLICATION OF PRESTRESSING FORCES; AND B. GROUTING OF BONDED PRESTRESSING TENDONS.	X X	-- --	ACI 318: 26.10	--
10. INSPECT ERECTION OF PRECAST CONCRETE MEMBERS.	--	X	ACI 318: 26.9	--
11. VERIFY IN-SITU CONCRETE STRENGTH, PRIOR TO STRESSING OF TENDONS IN POST-TENSIONED CONCRETE AND PRIOR TO REMOVAL OF THE SHORES AND FORMS FROM BEAMS AND STRUCTURAL SLABS.	--	X	ACI 318: 26.11.2	--
12. INSPECT FORMWORK FOR SHAPE, LOCATION AND DIMENSIONS OF THE CONCRETE MEMBER BEING FORMED.	--	X	ACI 318: 26.11.2 (b)	--

2018 IBC TABLE 1705.6
REQUIRED SPECIAL INSPECTIONS AND TEST OF SOILS

TYPE	CONTINUOUS SPECIAL INSPECTION	PERIODIC SPECIAL INSPECTION
1. VERIFY MATERIALS BELOW SHALLOW FOUNDATIONS ARE ADEQUATE TO ACHIEVE THE DESIGN BEARING CAPACITY.	--	X
2. VERIFY EXCAVATIONS ARE EXTENDED TO PROPER DEPTH AND HAVE REACHED PROPER MATERIAL.	--	X
3. PERFORM CLASSIFICATION AND TESTING OF COMPACTED FILL MATERIALS.	--	X
4. VERIFY USE OF PROPER MATERIALS, DENSITIES AND LIFT THICKNESS DURING PLACEMENT AND COMPACTION OF COMPACTED FILL.	X	--
5. PRIOR TO PLACEMENT OF COMPACTED FILL, INSPECT SUBGRADE AND VERIFY THAT SITE HAS BEEN PREPARED PROPERLY.	--	X

2018 IBC TABLE 1705.2.3
REQUIRED SPECIAL INSPECTIONS OF OPEN-WEB STEEL JOISTS AND JOIST GIRDERS

TYPE	CONTINUOUS SPECIAL INSPECTION	PERIODIC SPECIAL INSPECTION	REFERENCED STANDARD
1. INSTALLATION OF OPEN-WEB STEEL JOISTS AND JOIST GIRDERS.			
A. END CONNECTIONS - WELDING AND BOLTED.	--	X	SJI SPECIFICATIONS LISTED IN SECTION 2207.1.
B. BRIDGING - HORIZONTAL OR DIAGONAL	--	--	--
1. STANDARD BRIDGING	--	X	SJI SPECIFICATIONS LISTED IN SECTION 2207.1.
2. BRIDGING THAT DIFFERS FROM THE SJI SPECIFICATIONS LISTED IN SECTION 2207.1.	--	X	--

TMS 402/602-16 TABLE 3
MINIMUM VERIFICATION REQUIREMENTS

MINIMUM VERIFICATION	REQUIRED FOR QUALITY ASSURANCE			REFERENCE FOR CRITERIA
	LEVEL 1	**LEVEL 2**	LEVEL 3	TMS 602
1. PRIOR TO CONSTRUCTION, VERIFICATION OF COMPLIANCE OF SUBMITTALS.	R	**R**	R	ART. 1.5
2. PRIOR TO CONSTRUCTION, VERIFICATION OF f'_m AND f'_{AAC}, EXCEPT WHERE SPECIFICALLY EXEMPTED BY THE CODE.	NR	**R**	R	ART. 1.4 B
3. DURING CONSTRUCTION, VERIFICATION OF SLUMP FLOW AND VISUAL STABILITY INDEX (VSI) WHEN SELF-CONSOLIDATING GROUT IS DELIVERED TO THE PROJECT SITE.	NR	**R**	R	ART. 1.5 & 1.6.3
4. DURING CONSTRUCTION, VERIFICATION OF f'_m AND f'_{AAC} FOR EVERY 5,000 SQ. FT. (465 SQ. M.)	NR	**NR**	R	ART. 1.4 B
5. DURING CONSTRUCTION, VERIFICATION OF PROPORTIONS OF MATERIALS AS DELIVERED TO THE PROJECT SITE FOR PREMIXED OR PREBLENDED MOTOR, PRESTRESSING GROUT, AND GROUT OTHER THAN SELF-CONSOLIDATING GROUT.	NR	**NR**	R	ART. 1.4 B

TABLE 4 - MINIMUM SPECIAL INSPECTION

INSPECTION TASK	FREQUENCY[a]			REFERENCE FOR CRITERIA	
	LEVEL 1	**LEVEL 2**	LEVEL 3	TMS 402	TMS 602
1. AS MASONRY CONSTRUCTION BEGINS, VERIFY THAT THE FOLLOWING ARE IN COMPLIANCE:					
A. PROPORTION OF THE SITE-PREPARED MORTAR	NR	**P**	P		ART. 2.1, 2.6 A. & 2.6 C
B. GRADE AND SIZE OF PRESTRESSING TENDONS AND ANCHORAGES	NR	**P**	P		ART. 2.4 B. & 2.4 H
C. GRADE, TYPE AND SIZE OF REINFORCEMENT, CONNECTORS, ANCHOR BOLTS, AND PRESTRESSING TENDONS AND ANCHORAGES	NR	**P**	P		ART. 3.4 & 3.6A
D. PRESTRESSING TECHNIQUE	NR	**P**	P		ART. 3.6B
E. PROPERTIES OF THIN BED MORTAR FOR AAC MASONRY	NR	**C[b],(P[c])**	C		ART. 2.1 C.1
F. SAMPLE PANEL CONSTRUCTION	NR	**P**	C		ART. 1.6 D
2. PRIOR TO GROUTING, VERIFY THAT THE FOLLOWING ARE IN COMPLIANCE:					
A. GROUT SPACE	NR	**P**	C		ART. 3.2 D & 3.2 F
B. PLACEMENT OF PRESTRESSING TENDONS AND ANCHORAGES	NR	**P**	P	SEC. 10.8 & 10.9	ART. 2.4 & 3.6
C. PLACEMENT OF REINFORCEMENT, CONNECTORS, ANCHOR BOLTS	NR	**P**	C	SEC. 6.1, 6.3.1, 6.3.6, & 6.3.7	ART. 3.2 E & 3.4
D. PROPORTIONS OF SITE -PREPARED GROUT AND PRESTRESSING GROUT FOR BONDED TENDONS.	NR	**P**	P		ART. 2.6 E & 2.4 G.1.B
3. VERIFY COMPLIANCE OF THE FOLLOWING DURING CONSTRUCTION.					
A. MATERIALS AND PROCEDURES WITH THE APPROVED SUBMITTALS	NR	**P**	P		ART. 1.5
B. PLACEMENT OF MASONRY UNITS AND MORTAR JOINT CONSTRUCTION	NR	**P**	P		ART. 3.3 B
C. SIZE AND LOCATION OF STRUCTURAL MEMBERS	NR	**P**	P		ART. 3.3 F
D. GRADE, TYPE AND SIZE AND LOCATION OF ANCHORS, INCLUDING OTHER DETAILS OF ANCHORAGE OF MASONRY TO STRUCTURAL MEMBERS, FRAMES, OR OTHER CONSTRUCTION	NR	**P**	C	SEC. 1.2.1(E), 6.2.1, & 6.3.1	
E. WELDING OF REINFORCEMENT	NR	**C**	C	SEC. 6.1.6.1.2	
F. PREPARATION, CONSTRUCTION, AND PROTECTION OF MASONRY DURING COLD WEATHER (TEMPERATURE BELOW 40°F (4.4°C)) OR HOT WEATHER (TEMPERATURE ABOVE 90°F (32.2°C))	NR	**P**	P		ART. 1.8 C, 1B.D
G. APPLICATION AND MEASUREMENT OF THE PRESTRESSING FORCE	NR	**C**	C		ART. 3.6 B
H. PLACEMENT OF GROUT AND PRESTRESSING GROUT FOR BONDED TENDONS IS IN COMPLIANCE	NR	**C**	C		ART. 3.5 & 3.6 C
I. PLACEMENT OF AAC MASONRY UNITS AND CONSTRUCTION OF THE THIN-BED MORTAR JOINTS.	NR	**C[b],(P[c])**	C		ART. 3.3.B.9 & 3.3 F.1.B
4. OBSERVE PREPARATION OF GROUT SPECIMENS, MORTAR SPECIMENS AND/OR PRISMS.	NR	**P**	C		ART. 1.4 B.2.A.3, 1.4.B 2.B.3, 1.4.B 2.C.3 1.4. B.3, & 1.4 B.4

a. FREQUENCY REFERS TO THE FREQUENCE OF INSPECTION. WHICH MAY BE CONTINUOUS DURING THE LISTED TASK OR PERIODICALLY DURING THE LISTED TASK, AS DEFINED IN THE TABLE. R=REQUIRED, NR=NOT REQUIRED, P=PERIODIC, C=CONTINUOUS
b. REQUIRED FOR THE FIRST 5000 SQUARE FEET (465 SQUARE METERS) OF AAC MASONRY.
c. REQUIRE AFTER THE FRIST 5000 SQUARE FEET (465 SQUARE METERS) OF AAC MASONRY.

AISC 360 CHAPTER N AND 2018 IBC CHAPTER 17
REQUIRED VERIFICATION AND SPECIAL INSPECTION OF STEEL CONSTRUCTION

TYPE	CONTINUOUS SPECIAL INSPECTION	PERIODIC SPECIAL INSPECTION	REFERENCED STANDARD	IBC REFERENCE
1. MATERIAL VERIFICATION OF HIGH-STRENGTH BOLTS, NUTS AND WASHERS:			AISC 360 CHAPTER N	
A. IDENTIFICATION MARKINGS TO CONFORM TO ASTM STANDARDS SPECIFIED IN THE APPROVED CONSTRUCTION DOCUMENTS.	--	X	APPLICABLE ASTM MATERIAL SPECIFICATIONS; AISC 360, SECTION A3.3	--
B. MANUFACTURER'S CERTIFICATE OF COMPLIANCE REQUIRED.	--	X	--	--
2. INSPECTION OF HIGH-STRENGTH BOLTING:			AISC 360 CHAPTER N	
A. BEARING-TYPE CONNECTIONS.	--	X	AISC 360, SECTION M2.5	--
B. SLIP-CRITICAL CONNECTIONS.	X	--		
3. MATERIAL VERIFICATION OF STRUCTURAL STEEL:			AISC 360 CHAPTER N	
A. IDENTIFICATION MARKINGS TO CONFORM TO ASTM STANDARDS SPECIFIED IN THE APPROVED CONSTRUCTION DOCUMENTS.	--	--	ASTM A 6 or ASTM A 568	--
B. MANUFACTURER'S CERTIFIED MILL TEST REPORTS.	--	--	ASTM A 6 or ASTM A 568	
4. MATERIAL VERIFICATION OF WELD FILLER MATERIALS:			AISC 360 CHAPTER N	
A. IDENTIFICATION MARKINGS TO CONFORM TO AWS SPECIFICATION IN THE APPROVED CONSTRUCTION DOCUMENTS.	--	--	AISC 360, SECTION A3.5	--
B. MANUFACTURER'S CERTIFICATE OF COMPLIANCE REQUIRED.	--	--	--	--
5. INSPECTION OF WELDING:			AISC 360 CHAPTER N	
A. STRUCTURAL STEEL:	--	--		
1. COMPLETE AND PARTIAL PENETRATION GROOVE WELDS.	X	--	AWS D1.1	--
2. MULTIPASS FILLET WELDS.	X	--		
3. SINGLE-PASS FILLET WELDS > 5/16"	X	--		
4. SINGLE-PASS FILLETS WELDS ≤5/16"	--	X		
5. FLOOR AND ROOF DECK WELDS.	--	X	AWS D1.3	1705.2.2
B. REINFORCING STEEL:	--	--		
1. VERIFICATION OF WELDABILITY OF REINFORCING STEEL OTHER THAN ASTM A706.	--	X	AWS D1.4 ACI 318: 3.5.2	1705.2.2
2. REINFORCING STEEL-RESISTING FLEXURAL AND AXIAL FORCES IN INTERMEDIATE AND SPECIAL MOMENT FRAMES, AND BOUNDARY ELEMENTS OF SPECIAL REINFORCED MASONRY SHEAR WALLS AND SHEAR REINFORCEMENT.	X	--		
3. SHEAR REINFORCEMENT.	X	--		
4. OTHER REINFORCING STEEL.	--	X		
6. INSPECTION OF STEEL FRAME JOINT DETAILS FOR COMPLIANCE WITH APPROVED CONSTRUCTION DOCUMENTS:			--	--
A. DETAILS SUCH AS BRACING AND STIFFENING.	--	X		
B. MEMBER LOCATIONS.	--	X		
C. APPLICATION OF JOINT DETAILS AT EACH CONNECTION.	--	X		

QUALITY ASSURANCE

I. QUALITY ASSURANCE PLAN

A. B. THE INTENT OF THIS QUALITY ASSURANCE PLAN IS TO IDENTIFY STRUCTURAL SYSTEMS OR ELEMENTS THAT ARE CRITICALLY IMPORTANT TO THE STRUCTURE'S ABILITY TO SAFELY RESIST CODE REQUIRED LOADS. QUALITY ASSURANCE FOR THE ITEMS LISTED BELOW WILL BE ACCOMPLISHED THROUGH THE USE OF SPECIAL INSPECTION & MATERIALS TESTING AND STRUCTURAL OBSERVATION. IN ADDITION, THE CONTRACTOR SHALL SUBMIT A WRITTEN STATEMENT OF RESPONSIBILITY TO THE BUILDING OFFICIAL AND OWNER IN ACCORDANCE WITH THE 2018 IBC SECTION 1704.4.

B. LATERAL FORCE RESISTING SYSTEM(S): SPECIAL REINFORCED MASONRY SHEAR WALLS.

C. COMPONENTS & ELEMENTS: MASONRY WALLS AND THEIR ANCHORAGE.

II. SPECIAL INSPECTION AND MATERIAL TESTING

A. SPECIAL INSPECTION AND ASSOCIATED MATERIALS TESTING SHALL BE PERFORMED FOR THE PROCESSES AND MATERIALS REQUIRED FOR CONSTRUCTION. THE TYPE AND FREQUENCY OF SPECIAL INSPECTIONS AND MATERIALS TESTING AS WELL AS THE FREQUENCY AND DISTRIBUTION OF RELATED REPORTS SHALL BE AS INDICATED IN THE CONSTRUCTION DOCUMENTS AND AS REQUIRED BY ALL APPLICABLE CODES.

B. THE SPECIAL INSPECTOR SHALL OBSERVE THE WORK FOR COMPLIANCE WITH THE CONSTRUCTION DOCUMENTS. THE SPECIAL INSPECTOR SHALL FURNISH INSPECTION REPORTS TO THE ARCHITECT, OWNER AND BUILDING OFFICIAL. ALL DISCREPANCIES SHALL BE BROUGHT TO THE IMMEDIATE ATTENTION OF THE CONTRACTOR FOR CORRECTION, THEN IF UNCORRECTED, TO THE ARCHITECT, OWNER AND BUILDING OFFICIAL. AT THE CONCLUSION OF WORK, THE SPECIAL INSPECTOR SHALL SUBMIT A FINAL REPORT TO THE ARCHITECT, OWNER AND BUILDING OFFICIAL INDICATING THE WORK REQUIRING SPECIAL INSPECTION WAS INSPECTED AND IS IN CONFORMANCE WITH THE CONSTRUCTION DOCUMENTS AND THAT ALL DISCREPANCIES NOTED IN THE INSPECTION REPORTS HAVE BEEN CORRECTED.

C. SPECIAL INSPECTIONS IN ACCORDANCE WITH 2018 IBC CHAPTER 17 SHALL BE REQUIRED FOR THE FOLLOWING STRUCTURAL ITEMS:

1. STEEL CONSTRUCTION IN ACCORDANCE WITH AISC 360 CHAPTER FOR STRUCTURAL STEEL AND 2018 IBC TABLE 1705.2.3 FOR OTHER STEEL.
2. CONCRETE CONSTRUCTION IN ACCORDANCE WITH 2018 IBC TABLE 1705.3.
3. MASONRY CONSTRUCTION IN ACCORDANCE WITH TMS 402/602-16 TABLE 3 AND 4.
4. SOILS IN ACCORDANCE WITH 2018 IBC TABLE 1705.6.
5. POST INSTALLED ANCHORS IN ACCORDANCE WITH EVALUATION REPORTS AND MANUFACTURER RECOMMENDATIONS.

D. IN ADDITION TO THE SPECIAL INSPECTIONS LISTED ABOVE, SPECIAL INSPECTION FOR SEISMIC RESISTANCE IN ACCORDANCE WITH 2018 IBC SECTIONS 1705.12 1705.13 SHALL REQUIRED FOR THE FOLLOWING STRUCTURAL ITEMS:

1. STEEL CONSTRUCTION INSPECTION AND NON-DESTRUCTIVE TESTING IN ACCORDANCE AISC CHAPTER 341 CHAPTER J FOR THE ELEMENTS OF THE LATERAL FORCE RESISTING SYSTEM.
2. EXTERIOR LIGHT GAUGE WALLS AND MASONRY VENEER PERIODIC SPECIAL INSPECTION IN ACCORDANCE WITH 2018 IBC SECTION 1705.12.5.

E. THE SPECIAL INSPECTIONS LISTED ABOVE ARE NOT INTENDED TO BE ALL INCLUSIVE AND ONLY REPRESENT SPECIAL INSPECTIONS FOR STRUCTURAL PORTIONS OF THE WORK. ADDITIONAL SPECIAL INSPECTIONS OF ARCHITECTURAL, MECHANICAL, ELECTRICAL, PLUMBING OR OTHER SYSTEMS MAY BE REQUIRED. REFER TO THE APPROPRIATE DESIGN DISCIPLINES FOR ADDITIONAL INFORMATION.

F. WHERE PERIODICAL INSPECTIONS ARE REQUIRED, THE FIRST INSPECTION SHALL OCCUR AT THE START OF THE CONSTRUCTION TASK BEING INSPECTED.

III. STRUCTURAL OBSERVATION

A. THE CONTRACTOR SHALL PROVIDE THE ARCHITECT WITH WRITTEN NOTICE 48 HOURS PRIOR TO THE FOLLOWING CONSTRUCTION ACTIVITIES SO THAT APPROPRIATE STRUCTURAL OBSERVATION MAY BE PERFORMED: CONCRETE PLACEMENT, STEEL ERECTION, DIAPHRAGM NAILING/WELDING, AND GROUTING OF MASONRY. DEFICIENCIES WILL BE REPORTED IN WRITING. AT THE CONCLUSION OF WORK, THE STRUCTURAL ENGINEER WILL REVIEW THE PROJECT FOR GENERAL CONFORMANCE WITH PROJECT REQUIREMENTS. IF, IN THE OPINION OF THE STRUCTURAL ENGINEER, THE PROJECT STILL CONTAINS REPORTED DEFICIENCIES THAT HAVE NOT BEEN ADDRESSED BY THE CONTRACTOR, A WRITTEN STATEMENT WILL BE ISSUED INDICATING THAT SITE VISITS HAVE BEEN MADE AND THAT CERTAIN DEFICIENCIES REMAIN UNRESOLVED.

tsk
225 South Arlington Avenue
Reno NV, 89501
phone: 775.857.2949
fax: 775.857.2403
www.tska.com

NOT FOR CONSTRUCTION

THESE DRAWINGS AND SPECIFICATIONS ARE THE PROPERTY OF TATE SNYDER KIMSEY ARCHITECTS AND MAY NOT BE REPRODUCED OR USED FOR ANY PURPOSE WITHOUT THE ARCHITECTS WRITTEN CONSENT. AS INSTRUMENTS OF SERVICE, THESE DOCUMENTS ARE NOT FINAL AND READY FOR USE, AND THEREFORE NOT VALID, UNLESS THEY ARE SEALED, SIGNED AND DATED.
Copyright, Ltd 2022

Consultant

NELSON WILCOX
STRUCTURAL ENGINEERS
225 S Arlington Ave, Ste B, Reno, NV 89501
www.nelson-wilcox.com

PLEASE RECYCLE

Project
CITY OF FERNLEY
CRRC

Job No: 20-22

50% CONSTRUCTION DOCUMENTS

REVISIONS		
REV	DATE	DESCRIPTION

Sheet Title
SPECIAL INSPECTIONS & QUALITY ASSURANCE

Date: JANUARY 19, 2023
Sheet No:
S0.1

Owner
CITY OF FERNLEY

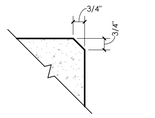

NOTES:
CHAMFER ALL EXPOSED CORNERS OF CONCRETE WALLS, COLUMNS, BEAMS, ETC., EXCEPT WHERE DETAILS OTHERWISE.

13 TYP. CONCRETE CHAMFER
3" = 1'-0"

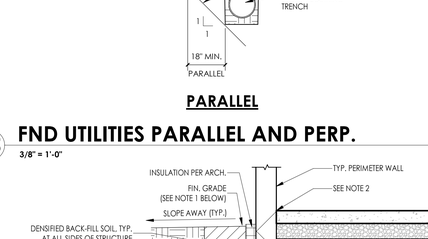

14 RAMP TOP & BOT. SECTION
1" = 1'-0"

NOTES:
1. THE CONTRACTOR SHALL COORDINATE ALL EXCAVATION OPERATIONS WITH BUILDING FOUNDATION REQUIREMENTS.
2. WHEN TOP OF PIPE IS 24" OR MORE BELOW BOTTOM OF FOOTING, CONC. ENCASEMENT AND ADDITIONAL REINF. ARE NOT REQUIRED. INSTALLATION OF PIPES AND UTILITIES IS NOT PERMITTED UNDER FOUNDATIONS AFTER FOUNDATIONS HAVE BEEN PLACED.

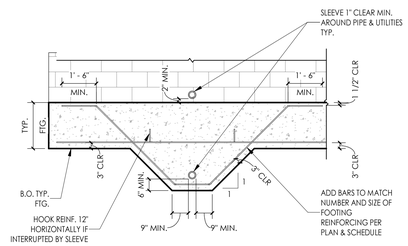

PERPENDICULAR ELEVATION

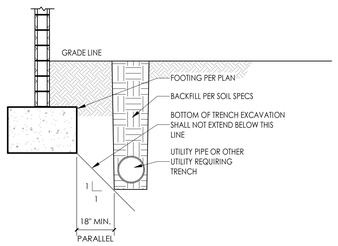

PARALLEL

15 FND UTILITIES PARALLEL AND PERP.
3/8" = 1'-0"

16 TYP. BUILDING FOUNDATION PREP.
1/2" = 1'-0"

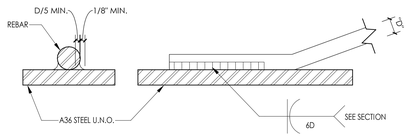

NOTES:
1. REBAR TO BE WELDED SHALL BE ASTM A706.
2. ALL PREHEATING AND WELDING SHALL BE DONE IN ACCORDANCE WITH AWS D1.4.
3. ALL REBAR WELDING SHALL BE CONTINUOUSLY INSPECTED BY A QUALIFIED LABORATORY.

9 REINFORCING WELDING DETAIL
3" = 1'-0"

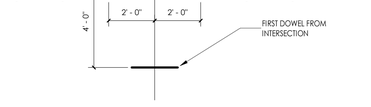

90 DEG. BEND 180 DEG. BEND

1. R=3D FOR #3 THROUGH #8
2. R=4D FOR #9 THROUGH #11
3. R=5D FOR #14 THROUGH #18

10 REINF. TYP. HOOKS AND BENDS
1" = 1'-0"

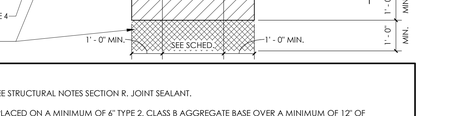

NOTES:
PUT CROSSTIE w/ EA. STIRRUP, ALT. 135 DEG. BENDS

TYP. CROSSTIE

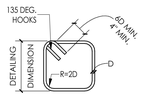

TYP. TIE

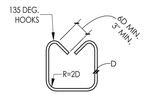

TYP. STIRRUP

11 REINFORCING HOOKS & BENDS FOR TIES
1" = 1'-0"

12 SLAB DOWELED JOINT INTERSECTION
3/8" = 1'-0"

NOTES:
1. SEE CIVIL FOR FINAL GRADES AND EXTERIOR IMPROVEMENTS.
2. THE INTERIOR FLOOR SLAB - BUILDING WALL JOINT SHALL BE CAULKED WITH SIKAFLEX-2c NS OR APPROVED EQUAL. SEE STRUCTURAL NOTES SECTION R, JOINT SEALANT.
3. SEE GENERAL NOTES SECTION C AND PROJECT SPECIFICATIONS FOR SOILS PREPARATION.
4. FOUNDATIONS SHALL BE PLACED ON A MINIMUM OF 12" OF STRUCTURAL FILL. INTERIOR SLABS ON GRADE SHALL BE PLACED ON A MINIMUM OF 6" TYPE 2, CLASS B AGGREGATE BASE OVER A MINIMUM OF 12" OF STRUCTURAL FILL PER GEOTECHNICAL. STRUCTURAL FILL SHALL BE AS INDICATED IN THE GENERAL NOTES AND PROJECT SPECIFICATIONS. REFER TO GENERAL NOTES SECTION C AND THE GEOTECHNICAL REPORT FOR ADDITIONAL INFORMATION.
5. EXTERIOR SLABS ON GRADE AND FLATWORK SHALL BE PLACED ON A MINIMUM OF 6" TYPE 2, CLASS B AGGREGATE BASE OVER A MINIMUM OF 12" OF STRUCTURAL FILL PER GEOTECHNICAL. STRUCTURAL FILL SHALL BE AS INDICATED IN THE GENERAL NOTES AND PROJECT SPECIFICATIONS. REFER TO GENERAL NOTES SECTION C AND THE GEOTECHNICAL REPORT FOR ADDITIONAL INFORMATION.
6. SCARIFY AND RECOMPACT NATIVE SOILS, PROVIDED THE MATERIALS ARE SUITABLE, TO A DEPTH OF 12". VERIFY NATIVE SOIL SUITABILITY WITH GEOTECHNICAL ENGINEER.

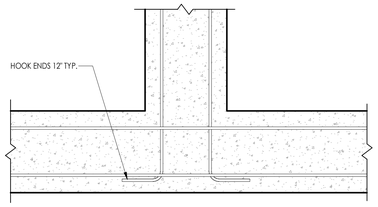

FOOTING INTERSECTION (PLAN VIEW)

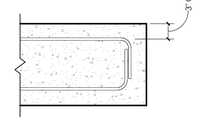

FOOTING END (PLAN VIEW)

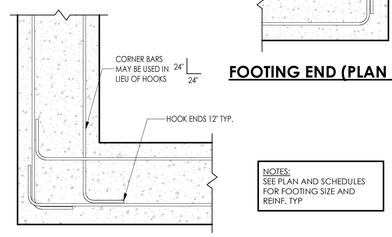

NOTES:
SEE PLAN AND SCHEDULES FOR FOOTING SIZE AND REINF. TYP

FOOTING CORNER (PLAN VIEW)

6 CONC. FTG. TYP. REINF. LAP
1" = 1'-0"

NOTES:
1. USE JOINT PROTECTORS AT ALL SLAB JOINT INTERSECTIONS WHEN SAWCUTTING.
2. SEE DETAIL 1 / S0.3 FOR TYP. CONSTRUCTION JOINT (C.J.).
3. ALTERNATE S.J. AND D.J. AT SLAB CONTROL JOINTS

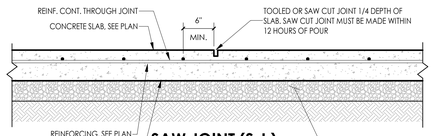

SAW JOINT (S.J.)

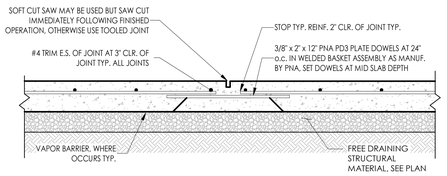

DOWELED JOINT (D.J.)

7 CONCRETE SLAB ON GRADE CONTROL JOINTS
1" = 1'-0"

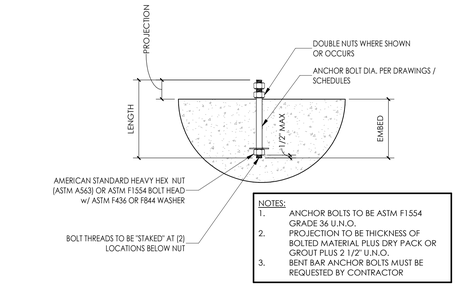

NOTES:
1. ANCHOR BOLTS TO BE ASTM F1554 GRADE 36 U.N.O.
2. PROJECTION TO BE THICKNESS OF BOLTED MATERIAL PLUS DRY PACK OR GROUT PLUS 2 1/2" U.N.O.
3. BENT BAR ANCHOR BOLTS MUST BE REQUESTED BY CONTRACTOR

1 CONCRETE ANCHOR BOLT TYPICAL
1 1/2" = 1'-0"

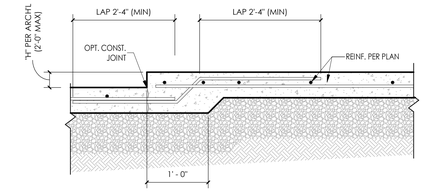

2 STEP IN SLAB
1" = 1'-0"

NOTES:
INDICATED ON FOUNDATION PLAN BY S-S, MIN. HORIZONTAL STEP SPACING IS 4'-0" o.c. U.N.O.

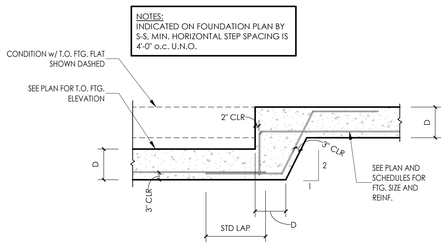

3 FOUNDATION TYP. STEP
3/8" = 1'-0"

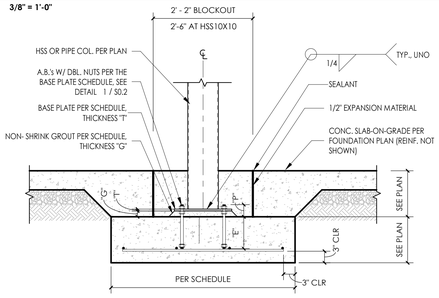

4 TYP. INTERIOR HSS COLUMN FOOTING
3/4" = 1'-0"

tsk
225 South Arlington Avenue
Reno NV, 89501
phone: 775.857.2949
fax: 775.857.2403
www.tska.com

NOT FOR CONSTRUCTION

THESE DRAWINGS AND SPECIFICATIONS ARE THE PROPERTY OF TATE SNYDER KIMSEY ARCHITECTS AND MAY NOT BE REPRODUCED OR USED FOR ANY PURPOSE WITHOUT THE ARCHITECTS WRITTEN CONSENT. AS INSTRUMENTS OF SERVICE, THESE DOCUMENTS ARE NOT FINAL AND READY FOR USE, AND THEREFORE NOT VALID, UNLESS THEY ARE SEALED, SIGNED AND DATED.
Copyright, Ltd 2022

Consultant

NELSON WILCOX
STRUCTURAL ENGINEERS
225 S Arlington Ave, Ste B, Reno, NV 89501
www.nelson-wilcox.com

PLEASE RECYCLE

Project
CITY OF FERNLEY CRRC

Job No: 21-058.00

Owner
CITY OF FERNLEY

Job No: 20-22

50% CONSTRUCTION DOCUMENTS

REVISIONS		
REV	DATE	DESCRIPTION

Sheet Title
TYP. CONC. & FOUNDATION DETAILS

Date: JANUARY 19, 2023
Sheet No:

S0.2

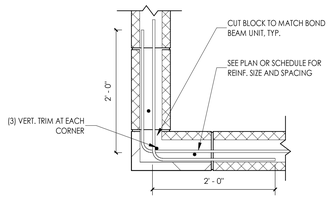

CORNER

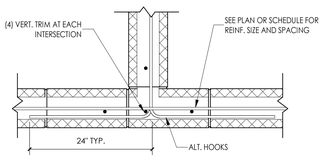

INTERSECTION

NOTES:
1. ALL TRIM REINF. TO MATCH SIZE OF WALL REINF., U.N.O. LAP ALL SPLICES PER GENERAL NOTES LAP SPLICE SCHEDULE.
2. COND. SIMILAR AT BLOCK WALLS w/ (2) LAYERS REINF.
3. MAY USE 24" x 24" CORNER BARS IN LIEU OF HORIZ. HOOKED BARS.

9 CMU TYP. CORNER AND JAMB REINF.

1" = 1'-0"

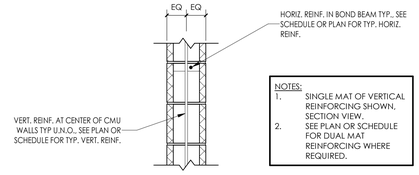

NOTES:
1. SINGLE MAT OF VERTICAL REINFORCING SHOWN, SECTION VIEW. SEE PLAN OR SCHEDULE FOR DUAL MAT REINFORCING WHERE REQUIRED.
2.

6 CMU TYP. PLACEMENT OF REINF.

1" = 1'-0"

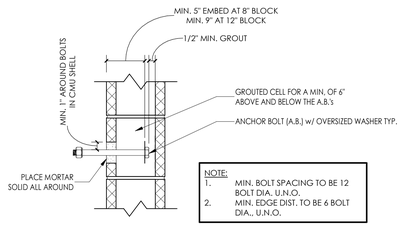

NOTE:
1. MIN. BOLT SPACING TO BE 12 BOLT DIA. U.N.O.
2. MIN. EDGE DIST. TO BE 6 BOLT DIA., U.N.O.

7 CMU ANCHOR BOLT TYPICAL

1 1/2" = 1'-0"

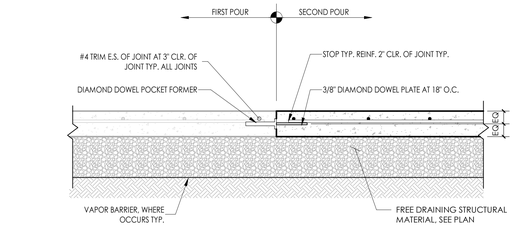

CONSTRUCTION JOINT (C.J.)

1 SLAB ON GRADE CONSTRUCTION JOINT (C.J.)

1" = 1'-0"

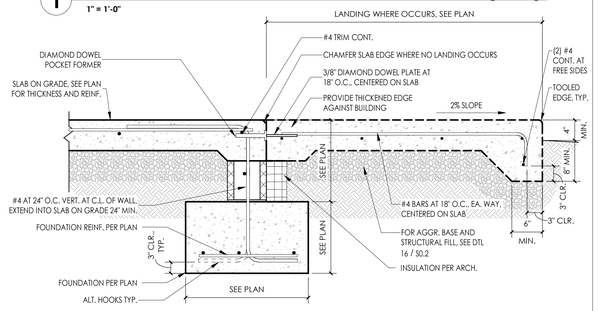

2 CMU WALL AT DOOR

1" = 1'-0"

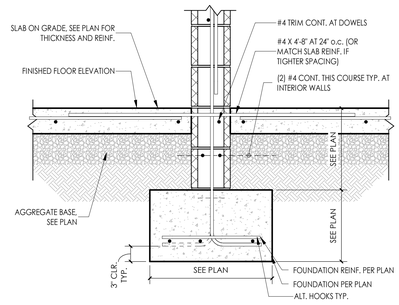

3 CMU TYPICAL INT. WALL SECTION

1" = 1'-0"

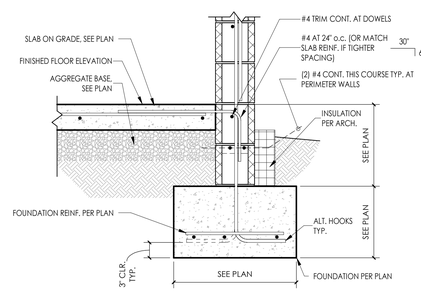

4 CMU TYPICAL WALL SECTION

1" = 1'-0"

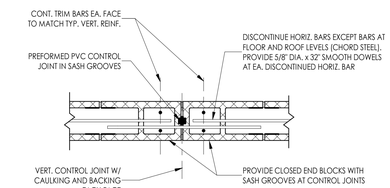

NOTES:
1. PROVIDE CONTROL JOINTS AT 40' - 0" MAX. AT ALL INTERIOR, EXTERIOR, AND SITE WALLS WHERE NOT OTHERWISE SHOWN ON PLANS.
2. REFER TO WALL ELEVATIONS FOR CONTROL JOINT LOCATIONS AND COORDINATE EXACT JOINT LOCATIONS TO WORK WITH JOINTS IN ARCHITECTURAL FINISHES.

5 CMU TYP. WALL CONTROL JOINT

1" = 1'-0"

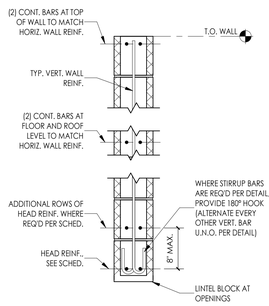

12A CMU HEAD DETAIL

1" = 1'-0"

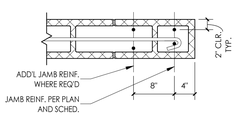

12B CMU JAMB DETAIL

1" = 1'-0"

NOTE:
SEE PLAN, ELEVATIONS, LINTEL SCHEDULE, AND JAMB SCHEDULE FOR SIZE AND REINFORCING REQUIRED.

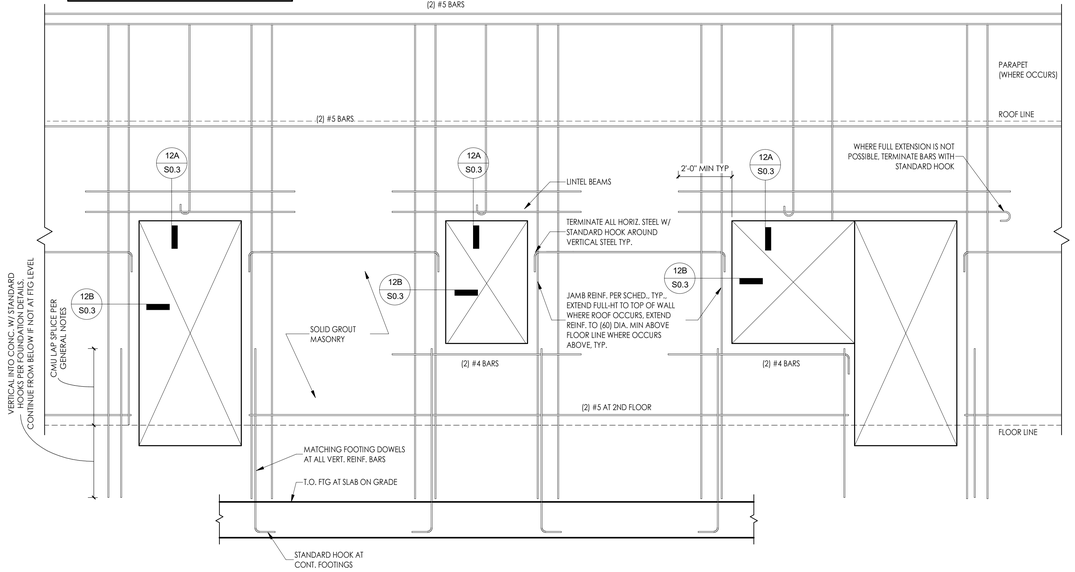

TYP. CMU LINTEL REINFORCING SCHEDULE

CMU SIZE	WIDTH	HEAD	STIRRUPS	h
8"	11' - 4" MAX.	(2) #5 HORIZ.	N/A	N/A
8"	16' - 0" MAX.	(4) #5 HORIZ. IN TWO ROWS	N/A	N/A
12"	11' - 4" MAX.	(2) #5 HORIZ.	N/A	N/A
12"	24' - 0" MAX.	(4) #5 HORIZ. IN TWO ROWS	N/A	N/A

NOTES:
1. SEE PLAN, WALL ELEVATIONS AND SPECIFIC DETAILS FOR ADDITIONAL REINFORCEMENT INFORMATION.
2. EXTEND BARS FROM FLOOR TO FLOOR OR FLOOR TO ROOF WHERE OPENING WIDTH EXCEEDS 2' - 0".

CMU JAMB REINFORCING SCHEDULE

CMU SIZE	TOTAL BARS	BAR PLACEMENT	NOTES
8"	(2) #5 VERT.	#5 E.F. IN ONE CELL	TYP. AT ALL OPENINGS, U.N.O.
12"	(2) #6 VERT.	#6 E.F. IN ONE CELL	TYP. AT ALL OPENINGS, U.N.O.

NOTES:
1. SEE WALL ELEVATIONS FOR ADDITIONAL REQUIRED JAMB REINF.

12 CMU LINTEL DETAIL

1/2" = 1'-0"

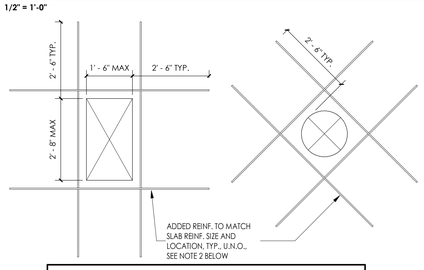

NOTES:
1. ADDED TRIM BARS ARE NOT REQUIRED IF THE HOLE DIAMETER IS LESS THAN 10" AND THE TYPICAL SLAB REINFORCING IS NOT INTERRUPTED.
2. REINFORCING STEEL EXTENSION SHALL BE 1.3 LD MIN. FOR #5 AND LARGER BARS.

13 SLAB OPENING TRIM REINFORCEMENT

1/2" = 1'-0"

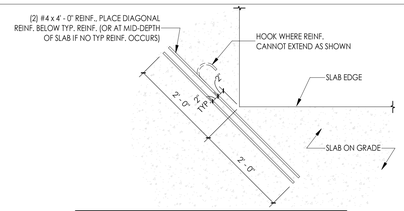

NOTES:
1. RE-ENTRANT 90 DEG. CORNER SUCH AS:
   A. OPENING IN SLAB
   B. AT WALL OR GRADE BEAM CORNERS
   C. ISOLATED EQUIPMENT BASE
2. REINFORCING PER THIS DETAIL SHALL BE INSTALLED AT ALL RE-ENTRANT CORNERS IN SLABS ON GRADE UNLESS SPECIFICALLY NOTED OTHERWISE.
3. REINFORCING PER THIS DETAIL DOES NOT OCCUR AT LOCATIONS WHERE SLAB JOINTS DIE INTO THE RE-ENTRANT CORNER.

10 REINF. AT RE-ENTRANT SLAB CORNERS

3/4" = 1'-0"

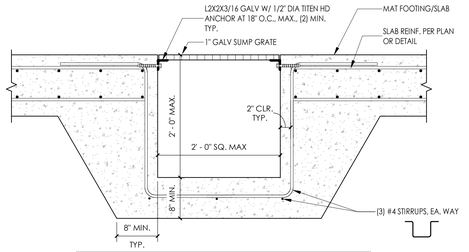

NOTES:
1. CONTRACTOR TO COORDINATE SUMP PIT LOCATION AND SIZE.
2. FOR CORNER REINFORCING AT SUMP CORNERS, SEE 10 / S0.3.

8 SUMP SECTION

1" = 1'-0"

tsk
225 South Arlington Avenue
Reno NV, 89501
phone: 775.857.2949
fax: 775.857.2403
www.tska.com

NOT FOR CONSTRUCTION

THESE DRAWINGS AND SPECIFICATIONS ARE THE PROPERTY OF TATE SNYDER KIMSEY ARCHITECTS AND MAY NOT BE REPRODUCED OR USED FOR ANY PURPOSE WITHOUT THE ARCHITECTS WRITTEN CONSENT. AS INSTRUMENTS OF SERVICE, THESE DOCUMENTS ARE NOT FINAL AND READY FOR USE, AND THEREFORE NOT VALID, UNLESS THEY ARE SEALED, SIGNED AND DATED.

Copyright, Ltd 2022

Consultant

NELSON WILCOX
STRUCTURAL ENGINEERS
225 S Arlington Ave, Ste B, Reno, NV 89501
www.nelson-wilcox.com

PLEASE RECYCLE

Project
CITY OF FERNLEY CRRC

Job No: 21-058.00

Owner
CITY OF FERNLEY

Job No: 20-22

50% CONSTRUCTION DOCUMENTS

REVISIONS

REV	DATE	DESCRIPTION

Sheet Title
TYP. CONC. & CMU DETAILS

Date: JANUARY 19, 2023

Sheet No:
S0.3

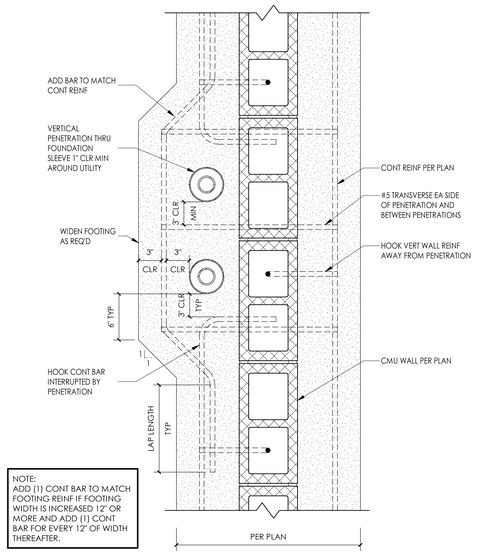

NOTE:
ADD (1) CONT BAR TO MATCH FOOTING REINF IF FOOTING WIDTH IS INCREASED 12" OR MORE AND ADD (1) CONT BAR FOR EVERY 12" OF WIDTH THEREAFTER.

8 TYP. VERT. PENETRATION AT WALL FOOTING

1 1/2" = 1'-0"

9 TYP. PENETRATION DIRECTLY UNDER ROOF DECK

1 1/2" = 1'-0"

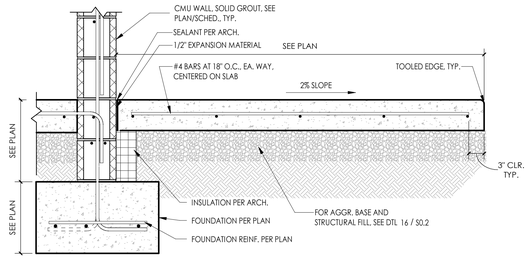

5 EXT. CONC. AT CMU WALL

1" = 1'-0"

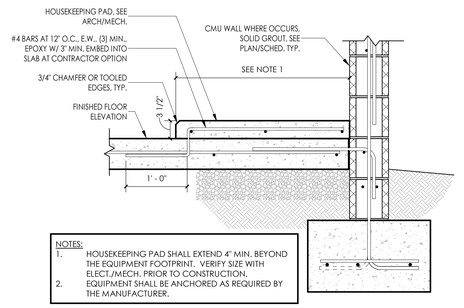

NOTES:
1. HOUSEKEEPING PAD SHALL EXTEND 4" MIN. BEYOND THE EQUIPMENT FOOTPRINT. VERIFY SIZE WITH ELECT./MECH. PRIOR TO CONSTRUCTION.
2. EQUIPMENT SHALL BE ANCHORED AS REQUIRED BY THE MANUFACTURER.

6 TYP. HOUSEKEEPING PAD

1" = 1'-0"

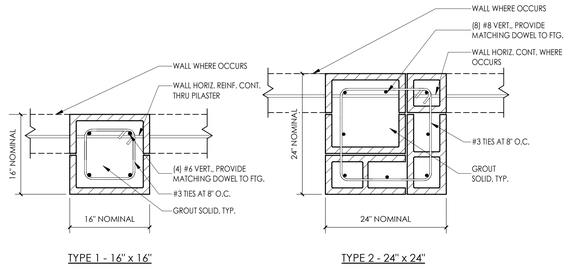

TYPE 1 - 16" x 16"

TYPE 2 - 24" x 24"

7 CMU TYP. PILASTERS

1" = 1'-0"

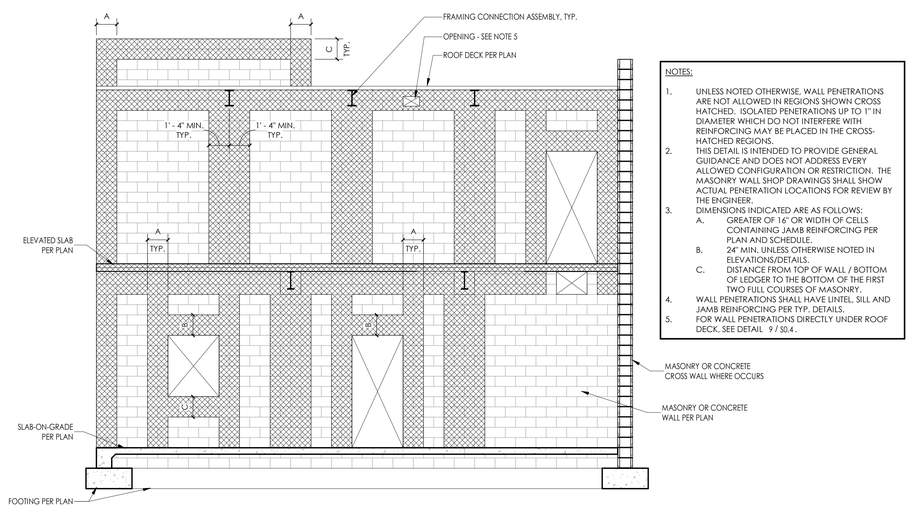

NOTES:
1. UNLESS NOTED OTHERWISE, WALL PENETRATIONS ARE NOT ALLOWED IN REGIONS SHOWN CROSS HATCHED. ISOLATED PENETRATIONS UP TO 1" IN DIAMETER WHICH DO NOT INTERFERE WITH REINFORCING MAY BE PLACED IN THE CROSS-HATCHED REGIONS.
2. THIS DETAIL IS INTENDED TO PROVIDE GENERAL GUIDANCE AND DOES NOT ADDRESS EVERY ALLOWED CONFIGURATION OR RESTRICTION. THE MASONRY WALL SHOP DRAWINGS SHALL SHOW ACTUAL PENETRATION LOCATIONS FOR REVIEW BY THE ENGINEER.
3. DIMENSIONS INDICATED ARE AS FOLLOWS:
   A. GREATER OF 16" OR WIDTH OF CELLS CONTAINING JAMB REINFORCING PER PLAN AND SCHEDULE.
   B. 24" MIN. UNLESS OTHERWISE NOTED IN ELEVATIONS/DETAILS.
   C. DISTANCE FROM TOP OF WALL / BOTTOM OF LEDGER TO THE BOTTOM OF THE FIRST TWO FULL COURSES OF MASONRY.
4. WALL PENETRATIONS SHALL HAVE LINTEL, SILL AND JAMB REINFORCING PER TYP. DETAILS.
5. FOR WALL PENETRATIONS DIRECTLY UNDER ROOF DECK, SEE DETAIL 9 / S0.4 .

4 TYP. PROHIBITED MASONRY AND CONC. WALL PENETRATION LOCATIONS

1/4" = 1'-0"

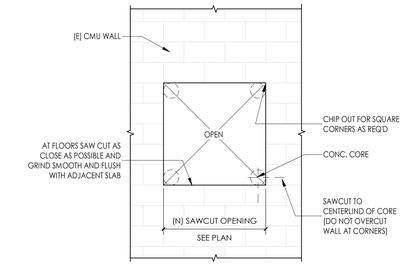

1 CMU TYP. SAW CUT OPENING

1/2" = 1'-0"

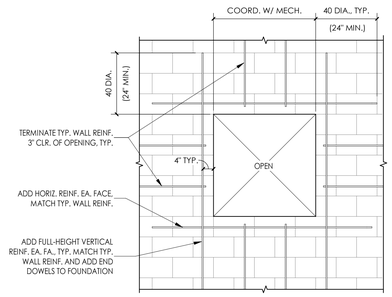

2 CMU LOUVER OPENING REINF.

1/2" = 1'-0"

IN ALL CASES, THE WALL REINFORCEMENT MUST TAKE PRECEDENCE OVER THE LOCATION OF THE CONDUITS, AND ADEQUATE ROOM IN THE CMU CELLS NEED TO BE MAINTAINED TO ALLOW FOR THE GROUT TO FLOW PROPERLY.

IN GENERAL, THE FOLLOWING NOTES NEED TO BE FOLLOWED:

1. NO VERTICAL ELECTRICAL CONDUIT IS TO BE PLACED IN THE FIRST 8" OF WALL JAMB AT THE WALL OPENINGS, WHICH SHALL BE RESERVED FOR JAMB REINFORCEMENT ONLY. PLACE VERT. CONDUIT IN NEXT ADJACENT CELL.
2. WHERE POSSIBLE, VERT. CONDUIT WILL BE PLACED IN NON-REINFORCED CELLS.
3. NO MORE THAN ONE 3/4" DIA. VERT. CONDUIT WILL BE PLACED IN A REINFORCED CELL AND:
   A. THE CONDUIT IS TO BE LOCATED SUCH THAT GROUT WILL BE ABLE TO FLOW COMPLETELY AROUND THE REINFORCING BARS.
   B. NO MORE THAN TWO 3/4" DIA. VERT. CONDUITS WILL BE PLACED IN A NON-REINFORCED CELL, UNLESS OTHER STRUCTURAL PROVISIONS ARE MADE.
4. IN HORIZONTAL BOND BEAMS, THE REBAR IS TO TAKE PRECEDENCE WHEREVER POSSIBLE. THE MASON SHALL PROVIDE ADDITIONAL ROWS OF BOND BEAM UNITS FOR HORIZONTAL CONDUITS TO RUN. IN NO CASE SHALL HORIZONTAL CONDUIT BE PLACED IN A BOND BEAM HAVING TWO HORIZ. BARS. ONLY IN CASES WHERE NO ALTERNATIVE IS AVAILABLE SHALL ONE CONDUIT BE PLACED IN THE SAME BOND BEAM AS ONE HORIZ. REBAR. NO MORE THAN TWO 3/4" DIA. MAX. SIZE CONDUITS BE PLACED IN A SINGLE BOND BEAM, PROVIDED THAT THERE IS NO HORIZ. REBAR IN BOND BEAM.

3 CONDUIT IN CMU

1" = 1'-0"

tsk
225 South Arlington Avenue
Reno NV, 89501
phone: 775.857.2949
fax: 775.857.2403
www.tska.com

NOT FOR CONSTRUCTION

THESE DRAWINGS AND SPECIFICATIONS ARE THE PROPERTY OF TATE SNYDER KIMSEY ARCHITECTS AND MAY NOT BE REPRODUCED OR USED FOR ANY PURPOSE WITHOUT THE ARCHITECTS WRITTEN CONSENT. AS INSTRUMENTS OF SERVICE, THESE DOCUMENTS ARE NOT FINAL AND READY FOR USE, AND THEREFORE NOT VALID, UNLESS THEY ARE SEALED, SIGNED AND DATED.

Copyright, Ltd 2022

Consultant

NELSON WILCOX
STRUCTURAL ENGINEERS
225 S Arlington Ave, Ste B, Reno, NV 89501
www.nelson-wilcox.com

PLEASE RECYCLE

Project
CITY OF FERNLEY
CRRC

Job No: 21-058.00

Owner
CITY OF FERNLEY

Job No: 20-22

50% CONSTRUCTION DOCUMENTS

REVISIONS		
REV	DATE	DESCRIPTION

Sheet Title
TYP. MASONRY DETAILS

Date: JANUARY 19, 2023
Sheet No:
S0.4

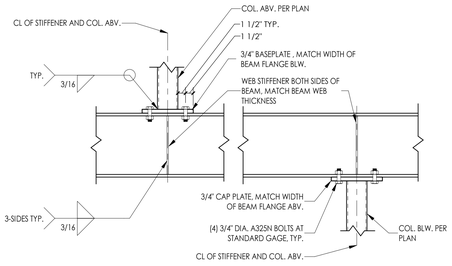

5 STEEL COL ABV. / BLW.

1" = 1'-0"

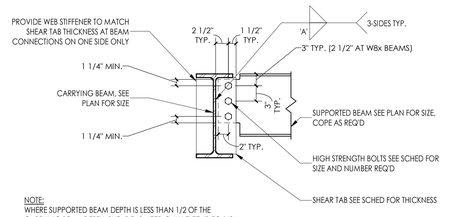

NOTE:
WHERE SUPPORTED BEAM DEPTH IS LESS THAN 1/2 OF THE CARRYING BEAM DEPTH, SHEAR TAB NEED ONLY EXTEND TO 1/2 THE DEPTH OF THE CARRYING BEAM. FULL HEIGHT WEB STIFFENER STILL REQUIRED AT CONNECTIONS ON ONE SIDE ONLY.

BEAM CONNECTION SCHEDULE

SHEAR PL. CONNECTION

SUPPORTED BEAM DEPTH	BOLTS			PL. THK.	WELD SIZE 'A'	CAPACITY		
	#	DIA	TYPE			ASD (KIPS)	LRFD (KIPS)	t_w MIN [1]
W8x - W10x	2	3/4"	A325N	1/4"	3/16"	16.3	24.5	3/8"
W12x - W14x	3	3/4"	A325N	1/4"	3/16"	25.6	38.3	5/16"
W16x	4	3/4"	A325N	1/4"	3/16"	34.8	52.2	5/16"
W18x	5	3/4"	A325N	3/8"	5/16"	54.5	82.0	3/8"
W21x	6	3/4"	A325N	3/8"	5/16"	66.8	100	-
W24x	7	3/4"	A325N	3/8"	5/16"	78.8	119	-
W27x - W30x	8	3/4"	A325N	3/8"	5/16"	90.9	137	-
W33x	9	3/4"	A325N	3/8"	5/16"	103	155	-
W36x	10	3/4"	A325N	3/8"	5/16"	115	172	-
W40x	11	3/4"	A325N	3/8"	5/16"	137	206	-
W44x	12	3/4"	A325N	3/8"	5/16"	138	208	-

1. LISTED CONNECTION CAPACITY APPLIES TO BEAMS WITH A WEB THICKNESS EQUAL TO OR GREATER THAN THE MININUM WEB THICKNESS (t_w) LISTED IN SCHEDULE.

1 STEEL TYP. BEAM TO BEAM SHEAR TAB

1" = 1'-0"

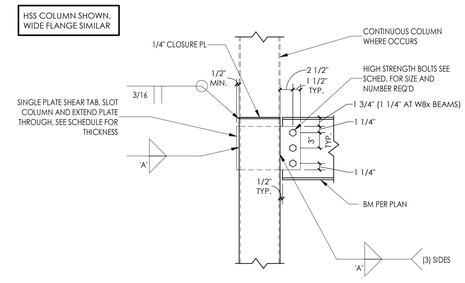

NOTE:
WHERE BEAMS FRAME PERPENDICULAR, SLOT AND EXTEND THROUGH HEAVIEST LOADED TAB.

BEAM CONNECTION SCHEDULE

SHEAR PL. CONNECTION

SUPPORTED BEAM DEPTH	BOLTS			PL. THK.	WELD SIZE 'A'	CAPACITY		
	#	DIA	TYPE			ASD (KIPS)	LRFD (KIPS)	t_w MIN [1]
W8x - W10x	2	3/4"	A325N	1/4"	3/16"	16.3	24.5	3/8"
W12x - W14x	3	3/4"	A325N	1/4"	3/16"	25.6	38.3	5/16"
W16x	4	3/4"	A325N	1/4"	3/16"	34.8	52.2	5/16"
W18x	5	3/4"	A325N	3/8"	5/16"	54.5	82.0	3/8"
W21x	6	3/4"	A325N	3/8"	5/16"	66.8	100	-
W24x	7	3/4"	A325N	3/8"	5/16"	78.8	119	-
W27x - W30x	8	3/4"	A325N	3/8"	5/16"	90.9	137	-
W33x	9	3/4"	A325N	3/8"	5/16"	103	155	-
W36x	10	3/4"	A325N	3/8"	5/16"	115	172	-
W40x	11	3/4"	A325N	3/8"	5/16"	137	206	-
W44x	12	3/4"	A325N	3/8"	5/16"	138	208	-

1. LISTED CONNECTION CAPACITY APPLIES TO BEAMS WITH A WEB THICKNESS EQUAL TO OR GREATER THAN THE MININUM WEB THICKNESS (t_w) LISTED IN SCHEDULE.

2 STEEL TYP. BEAM TO COL CONNECTION

1" = 1'-0"

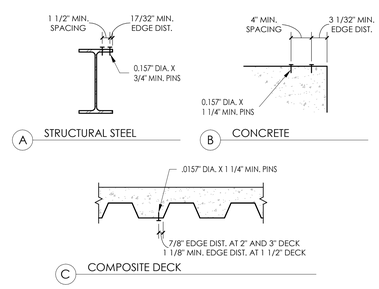

3 TYP. SHOT PINS

1" = 1'-0"

tsk
225 South Arlington Avenue
Reno NV, 89501
phone: 775.857.2949
fax: 775.857.2403
www.tska.com

NOT FOR CONSTRUCTION

THESE DRAWINGS AND SPECIFICATIONS ARE THE PROPERTY OF TATE SNYDER KIMSEY ARCHITECTS AND MAY NOT BE REPRODUCED OR USED FOR ANY PURPOSE WITHOUT THE ARCHITECTS WRITTEN CONSENT. AS INSTRUMENTS OF SERVICE, THESE DOCUMENTS ARE NOT FINAL AND READY FOR USE, AND THEREFORE NOT VALID, UNLESS THEY ARE SEALED, SIGNED AND DATED.

Copyright, Ltd 2022

Consultant

NELSON WILCOX
STRUCTURAL ENGINEERS
225 S Arlington Ave, Ste B, Reno, NV 89501
www.nelson-wilcox.com

PLEASE RECYCLE

Project
CITY OF FERNLEY CRRC

Job No: 21-058.00

Owner
CITY OF FERNLEY

Job No: 20-22

50% CONSTRUCTION DOCUMENTS

REVISIONS		
REV	DATE	DESCRIPTION

Sheet Title
TYP. STEEL DETAILS

Date: JANUARY 19, 2023
Sheet No:
S0.5

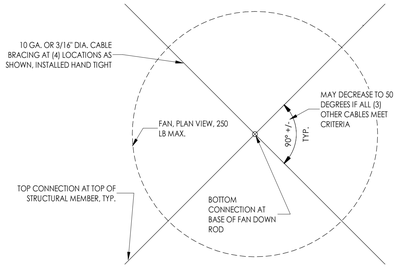

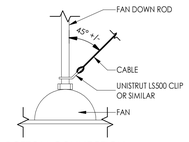

BOTTOM CONNECTION

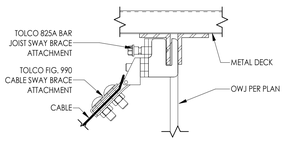

TOP CONNECTION

13 SUSPENDED FAN BRACING
1" = 1'-0"

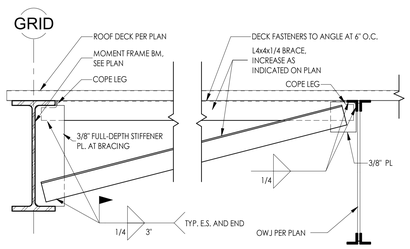

NOTE:
1. SEE JOIST LOADING PLAN FOR ADDITIONAL JOIST LOADS AT BRACES.
2. INCREASE THE ANGLES BRACES TO L4x4x3/8 AT AREA A WHERE NOTED.

14 FRAME BM BRACE AT PARALLEL JOIST
1" = 1'-0"

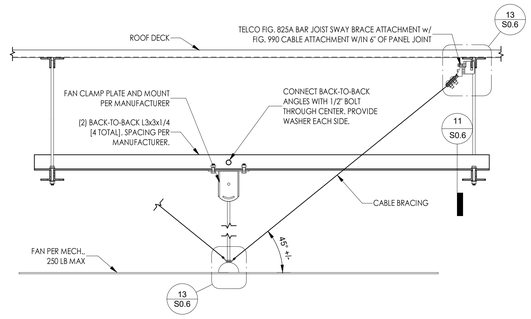

10 FAN MOUNT AT OWJ
1" = 1'-0"

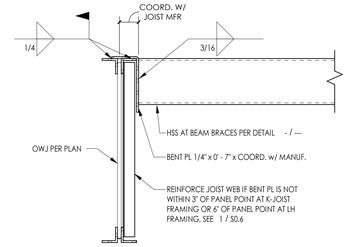

15 TYP. HSS TO ROOF JOIST
1 1/2" = 1'-0"

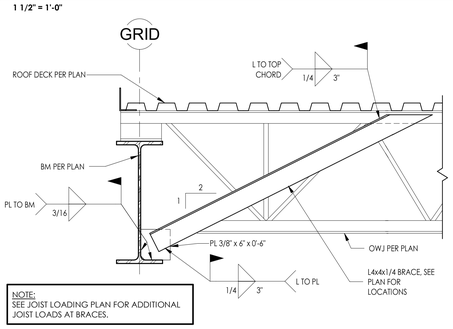

NOTE:
SEE JOIST LOADING PLAN FOR ADDITIONAL JOIST LOADS AT BRACES.

16 FRAME BEAM BRACE AT PERP. JOIST
1" = 1'-0"

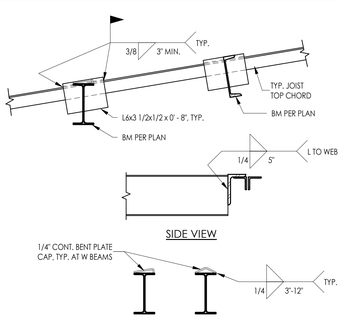

17 CROSS PIECE
1" = 1'-0"

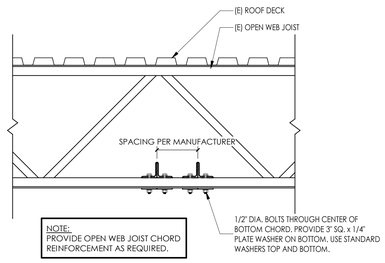

NOTE:
PROVIDE OPEN WEB JOIST CHORD REINFORCEMENT AS REQUIRED.

11 FAN MOUNT ANGLES TO CHORD CONN.
1" = 1'-0"

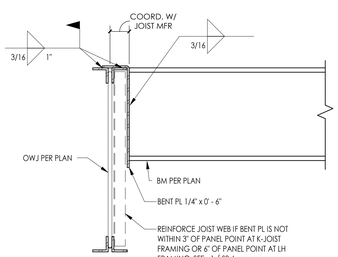

12 TYP. RAISED WF TO OWJ
1 1/2" = 1'-0"

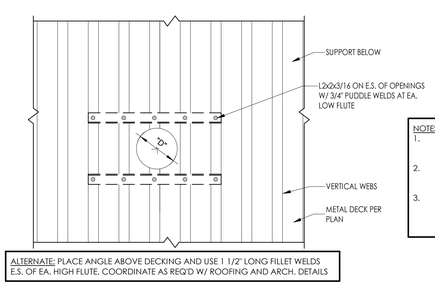

ALTERNATE: PLACE ANGLE ABOVE DECKING AND USE 1 1/2" LONG FILLET WELDS E.S. OF EA. HIGH FLUTE. COORDINATE AS REQ'D W/ ROOFING AND ARCH. DETAILS

NOTES:
1. NO REINFORCEMENT REQUIRED FOR OPENINGS NOT CUTTING WEB OF FLUTE.
2. FOR OPENINGS CUTTING TWO WEBS OF FLUTE, REINF. AS SHOWN ON THE LEFT.
3. FOR OPENINGS CUTTING MORE THAN TWO WEBS PROVIDE FRAMING AS SHOWN ON THE RIGHT.

SMALL OPENINGS

9 TYP. ROOF DECK PENETRATION REINFORCING
1" = 1'-0"

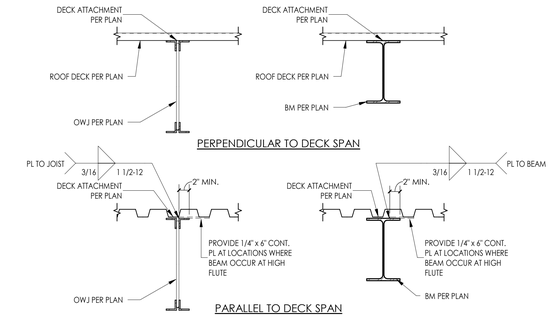

PARALLEL TO DECK SPAN

6 DECK TO BEAM DETAIL
1" = 1'-0"

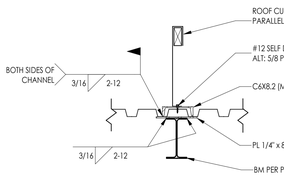

PERPENDICULAR TO JOIST

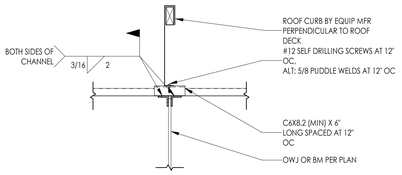

PARALLEL TO JOIST

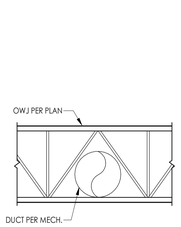

APPROXIMATE DUCT OPENING SIZES FOR "K" SERIES JOISTS			
JOIST DEPTH	DUCT PENETRATION		
	ROUND	SQUARE	RECTANGLE
10"	5"	4" x 4"	3" x 7"
12"	7"	5" x 5"	3" x 8"
14"	8"	6" x 6"	5" x 9"
16"	8"	6" x 6"	5" x 9"
18"	9"	7" x 7"	6" x 11"
20"	10"	8" x 8"	7" x 11"
22"	10"	9" x 9"	7" x 11"
24"	12"	10" x 10"	7" x 13"
26"	15"	12" x 12"	9" x 18"
28"	16"	13" x 13"	9" x 18"
30"	17"	14" x 14"	10" x 18"

NOTES:
1. WHERE DUCTS RUN THROUGH OWJS PROVIDE SPACE TO ACCOMODATE THE DUCT.
2. SEE MECH. FOR EXACT SIZE AND LOCATION OF DUCTS RUNNING THROUGH OWJS.
3. SHOP DRAWINGS SHALL SHOW SIZE OF DUCTS RUNNING THOUGH OWJS.

8 TYP. OWJ DUCT SPACE
1/2" = 1'-0"

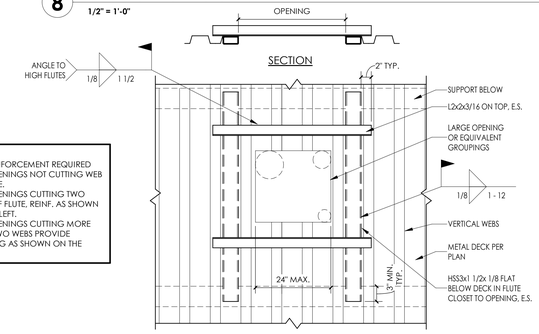

LARGE OPENINGS

7 CURB TO ROOF DETAIL
1" = 1'-0"

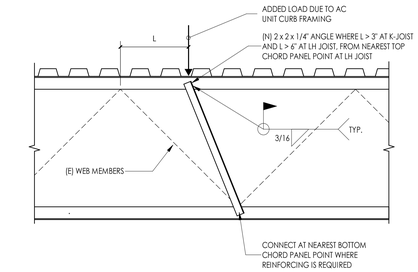

1 JOIST REINFORCING - TOP CHORD LOAD
1" = 1'-0"

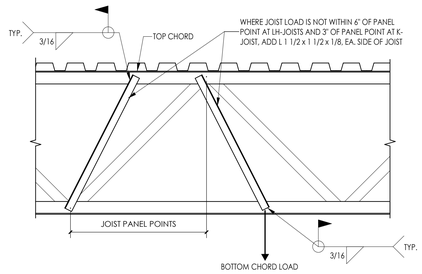

2 JOIST REINFORCING - BOT. CHORD LOAD
1" = 1'-0"

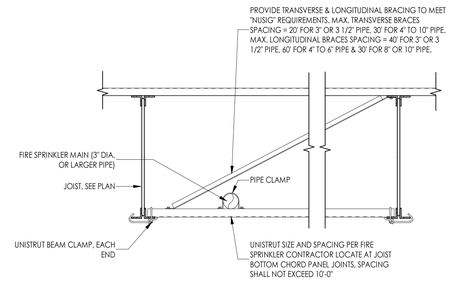

3 FIRE LINE SUPPORT - PARALLEL
1" = 1'-0"

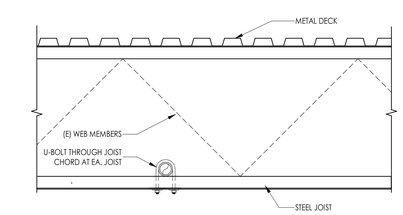

4 FIRE LINE SUPPORT - PERP. TO JOISTS
1" = 1'-0"

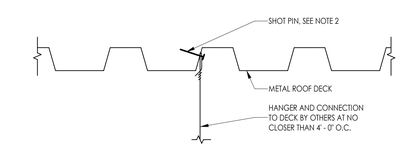

ACOUSTICAL TILE CEILING OR LIGHT FIXTURE < 56 LBS SUPPORT

NOTES:
1. ONLY ACOUSTICAL TILE CEILINGS OR LIGHT FIXTURES < 56 LBS. MAY BE SUSPENDED DIRECTLY FROM METAL ROOF DECK. IF ALTERNATE SUPPORT SYSTEMS FOR SUSPENDED ITEMS ARE DESIRED, THE CONTRACTOR SHALL SUBMIT SHOP DRAWINGS TO THE ARCHITECT FOR APPROVAL. ALTERNATE SUPPORT SYSTEMS SHALL UTILIZE STEEL FRAMING AND SHALL NOT RELY ON METAL DECK FOR SUPPORT.
2. HILTI X-U 19, 0.157" DIA. x 3/4", SHOT PINS MAY BE USED WHERE MAX. LOAD IS 20 LBS PER SHOT PIN. A MINIMUM OF (4) SHOT PINS ARE REQ'D. TO SUPPORT A 56 LBS FIXTURE.

5 TYP. SUSPENSION FROM METAL ROOF DECK
3" = 1'-0"

tsk
225 South Arlington Avenue
Reno NV, 89501
phone: 775.857.2949
fax: 775.857.2403
www.tska.com

NOT FOR CONSTRUCTION

THESE DRAWINGS AND SPECIFICATIONS ARE THE PROPERTY OF TATE SNYDER KIMSEY ARCHITECTS AND MAY NOT BE REPRODUCED OR USED FOR ANY PURPOSE WITHOUT THE ARCHITECTS WRITTEN CONSENT. AS INSTRUMENTS OF SERVICE, THESE DOCUMENTS ARE NOT FINAL AND READY FOR USE, AND THEREFORE NOT VALID, UNLESS THEY ARE SEALED, SIGNED AND DATED.
Copyright, Ltd 2022

Consultant

NELSON WILCOX
STRUCTURAL ENGINEERS
225 S Arlington Ave, Ste B, Reno, NV 89501
www.nelson-wilcox.com

PLEASE RECYCLE

Project
CITY OF FERNLEY CRRC

Job No: 21-058.00

Owner
CITY OF FERNLEY

Job No: 20-22

50% CONSTRUCTION DOCUMENTS

REVISIONS		
REV	DATE	DESCRIPTION

Sheet Title
TYP. ROOF FRAMING DETAILS

Date: JANUARY 19, 2023
Sheet No:
S0.6

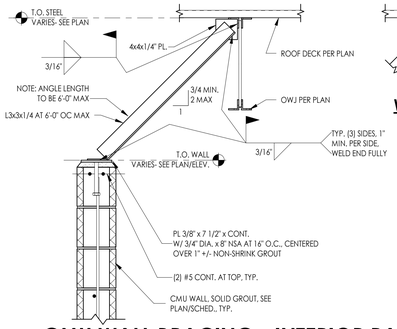

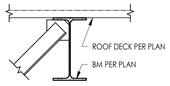

WF BEAM SIM.

15 CMU WALL BRACING - INTERIOR PARALLEL

1" = 1'-0"

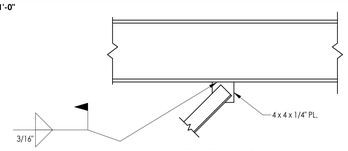

WF BEAM SIM.

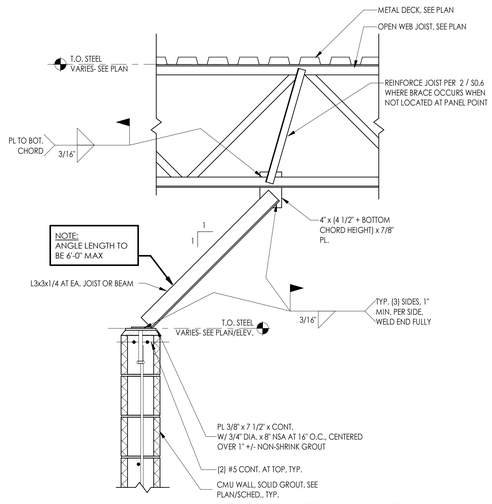

16 CMU WALL BRACING - INTERIOR PERP.

1" = 1'-0"

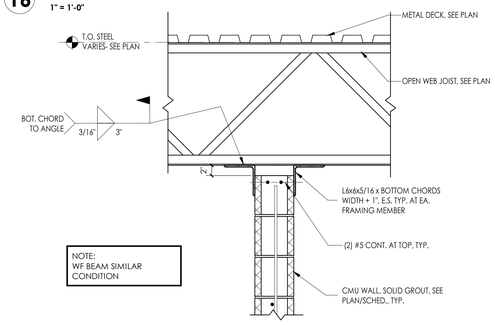

17 CMU WALL BRACING - INTERIOR PERP. HIGH

1" = 1'-0"

10 JOIST TIE

3" = 1'-0"

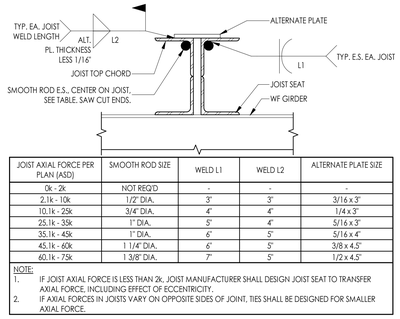

JOIST AXIAL FORCE PER PLAN (ASD)	SMOOTH ROD SIZE	WELD L1	WELD L2	ALTERNATE PLATE SIZE
0k - 2k	NOT REQ'D	-	-	-
2.1k - 10k	1/2" DIA.	3"	3"	3/16 x 3"
10.1k - 25k	3/4" DIA.	4"	4"	1/4 x 3"
25.1k - 35k	1" DIA.	5"	4"	5/16 x 3"
35.1k - 45k	1" DIA.	6"	5"	5/16 x 4"
45.1k - 60k	1 1/4" DIA.	6"	5"	3/8 x 4.5"
60.1k - 75k	1 3/8" DIA.	7"	5"	1/2 x 4.5"

NOTE:
1. IF JOIST AXIAL FORCE IS LESS THAN 2k, JOIST MANUFACTURER SHALL DESIGN JOIST SEAT TO TRANSFER AXIAL FORCE, INCLUDING EFFECT OF ECCENTRICITY.
2. IF AXIAL FORCES IN JOISTS VARY ON OPPOSITE SIDES OF JOINT, TIES SHALL BE DESIGNED FOR SMALLER AXIAL FORCE.

11 WF BEAM SEATED CONN. AT CMU

1" = 1'-0"

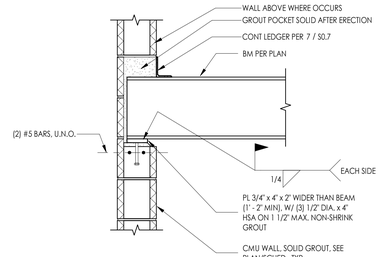

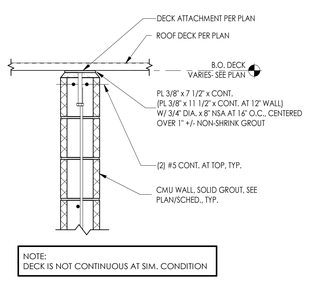

12 ROOF DECK CONN. TO CMU WALL

1" = 1'-0"

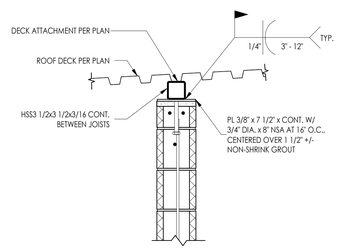

13 ROOF TO CMU WALL AT BLKG BTWN K JOIST

1" = 1'-0"

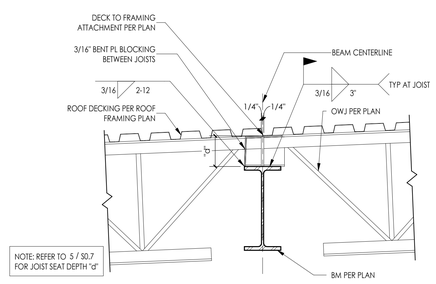

14 ROOF JOIST AT GIRDER

1" = 1'-0"

K JOIST SLOPED SEAT DEPTH	
SLOPE "X" : 12"	MIN. HIGH END SEAT DEPTH "d"
≤ 1"	3 1/2"
1" < X ≤ 2 1/2"	4"
2 1/2" < X ≤ 4"	4 1/2"
4" < X ≤ 5"	5"
5" < X ≤ 6"	5 1/2"

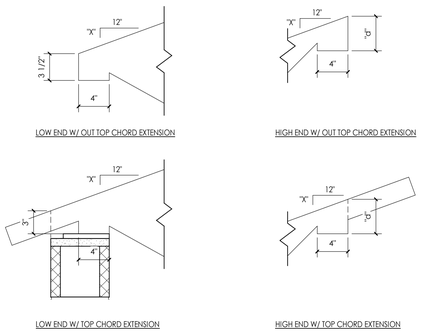

5 K JOIST SLOPED SEAT DEPTH

1 1/2" = 1'-0"

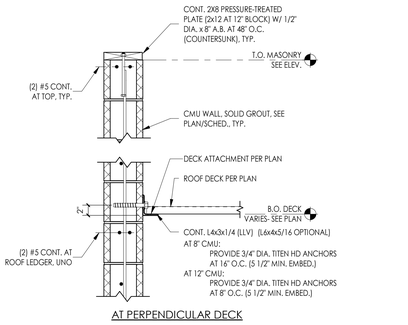

AT PERPENDICULAR DECK

7 CMU EXTERIOR WALL ROOF LEDGER CONN.

1" = 1'-0"

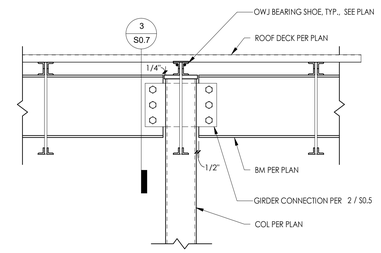

8 OWJ AT HSS COL DETAIL

1" = 1'-0"

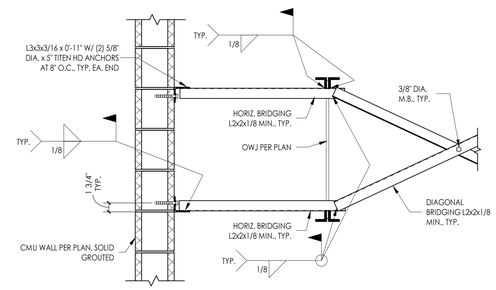

9 TYP. OWJ DIAGONAL BRIDGING

1" = 1'-0"

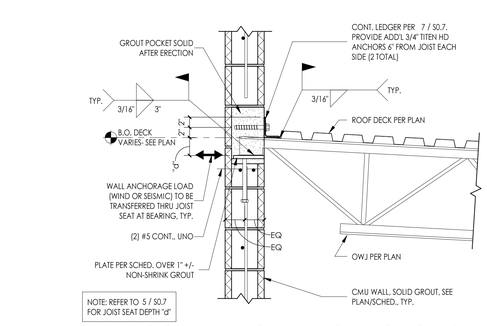

1 TYP. POCKETED JOIST IN CMU (HIGH SIDE)

1" = 1'-0"

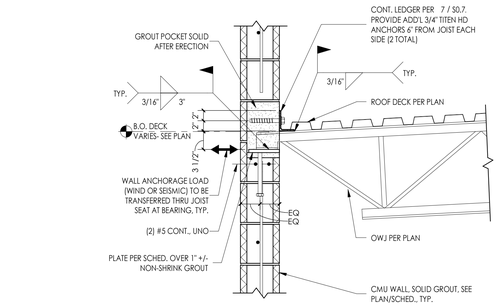

2 TYP. POCKETED JOIST IN CMU (LOW SIDE)

1" = 1'-0"

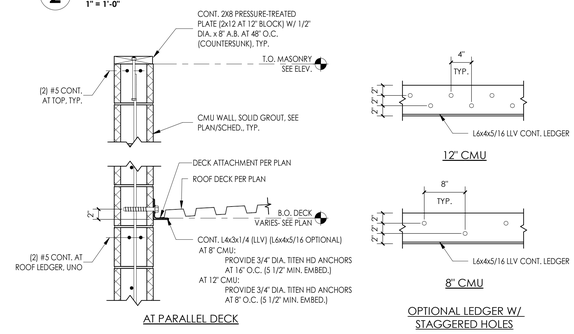

AT PARALLEL DECK

OPTIONAL LEDGER W/
STAGGERED HOLES

3 OWJ AT HSS COL DETAIL

1" = 1'-0"

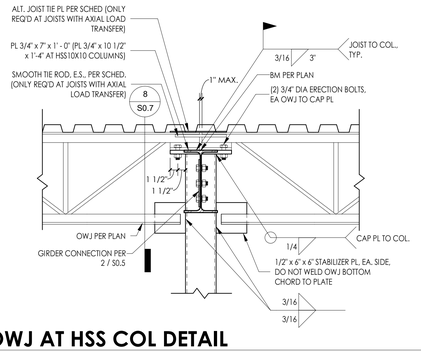

4 TYP. OWJ HORIZ BRIDGING

1" = 1'-0"

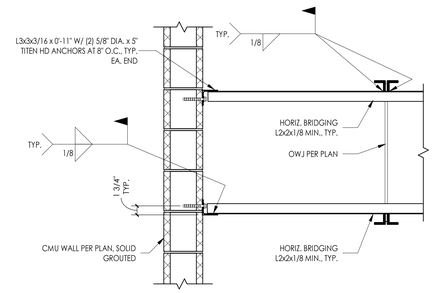

tsk
225 South Arlington Avenue
Reno NV, 89501
phone: 775.857.2949
fax: 775.857.2403
www.tska.com

NOT FOR CONSTRUCTION

THESE DRAWINGS AND SPECIFICATIONS ARE THE PROPERTY OF TATE SNYDER KIMSEY ARCHITECTS AND MAY NOT BE REPRODUCED OR USED FOR ANY PURPOSE WITHOUT THE ARCHITECTS WRITTEN CONSENT. AS INSTRUMENTS OF SERVICE, THESE DOCUMENTS ARE NOT FINAL AND READY FOR USE, AND THEREFORE NOT VALID, UNLESS THEY ARE SEALED, SIGNED AND DATED.
Copyright, Ltd 2022

Consultant

NELSON WILCOX
STRUCTURAL ENGINEERS
225 S Arlington Ave, Ste B, Reno, NV 89501
www.nelson-wilcox.com

PLEASE RECYCLE

Project
CITY OF FERNLEY CRRC

Job No: 21-058.00

Owner
CITY OF FERNLEY

Job No: 20-22

50% CONSTRUCTION DOCUMENTS

REVISIONS		
REV	DATE	DESCRIPTION

Sheet Title
TYP. ROOF FRAMING DETAILS

Date: JANUARY 19, 2023
Sheet No:
S0.7

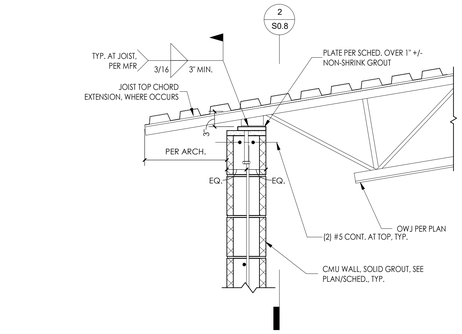

1 TYP. JOIST TO TOP OF WALL

1" = 1'-0"

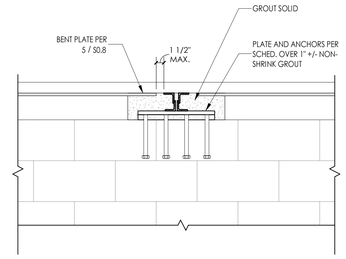

2 JOIST TO T.O. WALL ELEV.

1" = 1'-0"

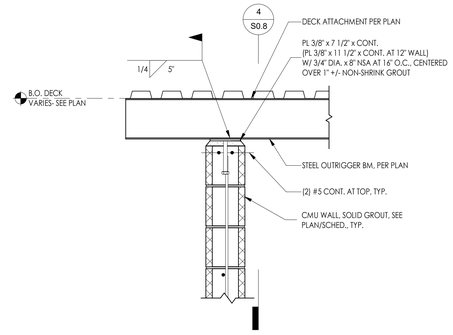

3 OUTRIGGER AT CMU WALL

1" = 1'-0"

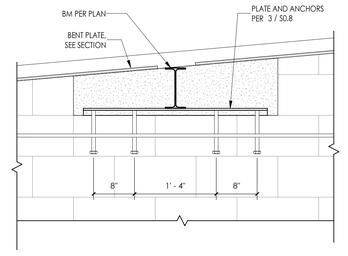

4 CMU - OURTIGGER TO T.O. WALL ELEV.

1" = 1'-0"

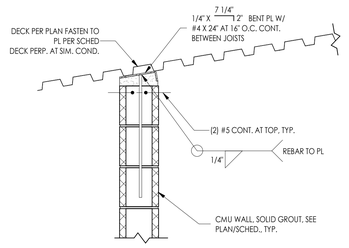

5 TYP. ROOF DECK AT TOP OF WALL

1" = 1'-0"

tsk
225 South Arlington Avenue
Reno NV, 89501
phone: 775.857.2949
fax: 775.857.2403
www.tska.com

NOT FOR CONSTRUCTION

THESE DRAWINGS AND SPECIFICATIONS ARE THE PROPERTY OF TATE SNYDER KIMSEY ARCHITECTS AND MAY NOT BE REPRODUCED OR USED FOR ANY PURPOSE WITHOUT THE ARCHITECTS WRITTEN CONSENT. AS INSTRUMENTS OF SERVICE, THESE DOCUMENTS ARE NOT FINAL AND READY FOR USE, AND THEREFORE NOT VALID, UNLESS THEY ARE SEALED, SIGNED AND DATED.

Copyright, Ltd 2022

Consultant

NELSON WILCOX
STRUCTURAL ENGINEERS
225 S Arlington Ave, Ste B, Reno, NV 89501
www.nelson-wilcox.com

PLEASE RECYCLE

Project
CITY OF FERNLEY CRRC

Job No: 21-058.00

Owner
CITY OF FERNLEY

Job No: 20-22

50% CONSTRUCTION DOCUMENTS

REVISIONS		
REV	DATE	DESCRIPTION

Sheet Title
TYP. ROOF FRAMING DETAILS

Date: JANUARY 19, 2023

Sheet No:
S0.8

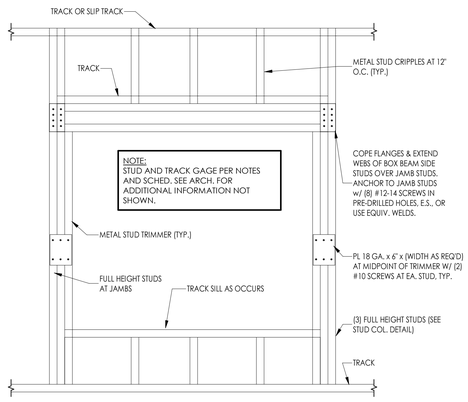

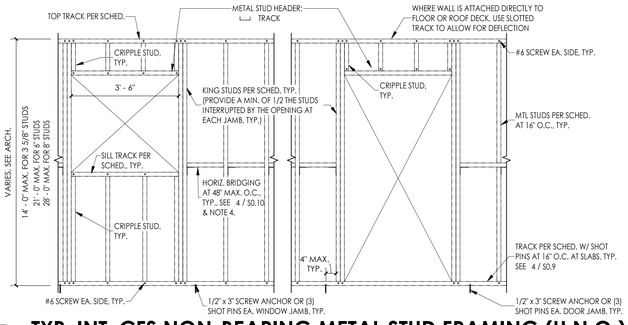

NOTES:
1. NON-STRUCTURAL STEEL PARTITION FRAMING SHALL BE PER ASTM C645 AND ASTM C754. AT CONTRACTORS OPTION STEEL FRAMING CONNECTIONS MAY BE MADE WITH SCREWS OR MATERIALS MAY BE UPSIZED TO 16 GA. MINIMUM TO ACCOMMODATE WELDS. CONTRACTOR IS TO PROVIDE SHOP DRAWINGS FOR OF ALL CONNECTIONS FOR APPROVAL BY THE STRUCTURAL ENGINEER BEFORE CONSTRUCTION.
2. SEE SHEET GENERAL NOTES AND SHEET S0.9 FOR ADDITIONAL CFS FRAMING INFORMATION AND DETAILS.
3. NON-BEARING, INTERIOR CFS WALL LOCATIONS AND HEIGHTS PER ARCH.
4. HORIZONTAL BRIDGING NOT REQUIRED WHEN WALL IS SHEATHED ON EACH SIDE.

METAL STUD WALL SCHEDULE

MARK	STUD SIZES			TRACK SIZES		
	TYPICAL[1]	KING[2]	CRIPPLE	BASE[3]	TOP	SILL/HDR
3 5/8"	3625137-33	(2) 3625137-33	3625137-33	362T125-33	362T125-33	362T125-33
6"	6005162-33	(2) 6005162-33	6005162-33	600T150-33	600T150-33	600T150-33
8"	8005162-43	(2) 8005162-43	8005162-43	800T150-43	800T150-43	800T150-43

NOTES:
1. SIZES SHOWN ARE TYPICAL, U.N.O.
2. TYPICAL STUD SPACING SHALL BE 16" O.C., MAX.
3. PROVIDE A MINIMUM OF 1/2 OF THE STUDS INTERRUPTED BY THE OPENINGS AT EACH JAMB, TYP.
4. PROVIDE 1/2" x 3" SCREW ANCHORS AT 32" O.C., TYP. AND WITHIN 4" OF ENDS, CORNERS AND JAMBS OR HILTI X-U POWDER ACTUATED FASTENERS AT 16" O.C. W/ MIN. 3/4" EMBED, TYP. AND (3) WITHIN 4" OF ENDS, CORNERS AND JAMBS.
5. SEE 3 / S0.9 & 10 / S0.9 FOR ADDITIONAL INFORMATION ON NON-BEARING DOOR AND WINDOW FRAMING.

7 TYP. INT. CFS NON-BEARING METAL STUD FRAMING (U.N.O.)
1/2" = 1'-0"

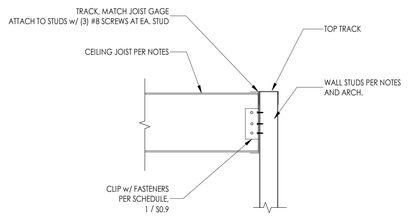

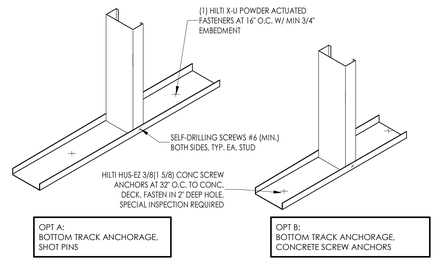

COLD-FORMED STEEL FRAMING NOTES

1. ALL INTERIOR CFS WALL STUD WIDTHS AND FINISHES PER ARCHITECTURAL. SEE GENERAL NOTES, SECTION I, FOR ADDITIONAL CFS REQUIREMENTS.
2. BEARING WALL FRAMING TO BE MINIMUM 362S 162-33 METAL STUDS AT 16" o.c. CONNECT 5/8" GYPSUM WALL BOARD TO EACH SIDE OF STUDS w/ #6 SCREWS AT 4" o.c. AT PANEL EDGES AND 12" o.c. IN THE FIELD.
3. BRACING (WHERE OCCURS) TO BE STUD OR TRACK. SPLICE BRACING AND TERMINATE ALL BRACING WITH END CONNECTION PER DETAILS.
4. STRUCTURAL FRAMING (JOISTS, BEARING WALLS, BRACING, CONNECTIONS ETC.) SHALL BE IN ACCORDANCE WITH THE GENERAL NOTES, SECTION I.
5. SEE 2 / S0.9, FOR STANDARD STUD DESIGNATIONS. 600 S162-43 FOR EXAMPLE IS A 6" DEEP, 1 5/8" FLANGE, 18 GA STUD.
6. CLIPS TO BE PER CEILING JOIST CLIP SCHEDULE BELOW.
7. CONTRACTOR TO SUSPEND CEILING EVENLY LOADED TO STUDS SPACED AT 24" o.c. WHERE APPLIES.
8. TYP. INTERIOR, NON-BEARING WALL FRAMING PER 7 / S0.9
9. TYPICAL DOOR FRAMING PER 3 / S0.9 OR 6 / S0.9 AT BEARING CONDITION.
10. TYPICAL WINDOW FRAMING PER 10 / S0.9 OR 13 / S0.9 AT BEARING CONDITION.
11. TYPICAL BOTTOM TRACK ANCHORAGE PER 4 / S0.9 TYP.
12. TYPICAL CEILING FRAMING PER 5 / S0.9 OR 9 / S0.9 .

CEILING JOIST CLIP SCHEDULE

STUD SIZE	CLIP GA.	SCREW TYPE	SCREW # TO STUD AND TRACK
800S	16	#8	2
1000S	14	#8	3
1200S	14	#8	4
1400S	14	#8	5

11 STUD FRAMED OPENING DETAIL, L > 6'-0"
1" = 1'-0"

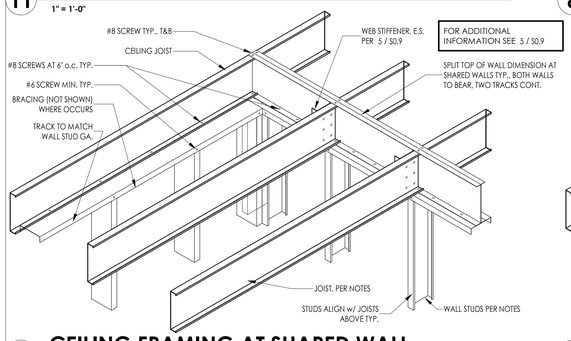

8 CEILING FRAMING - TRACK
1" = 1'-0"

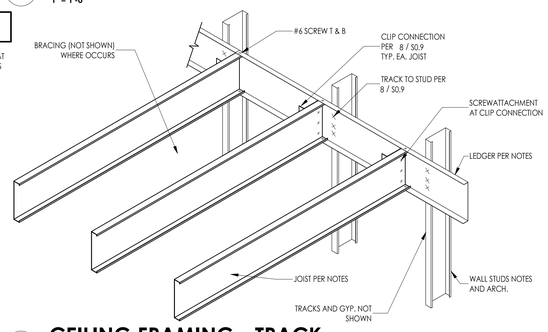

4 BOTTOM TRACK ANCHORAGE
1" = 1'-0"

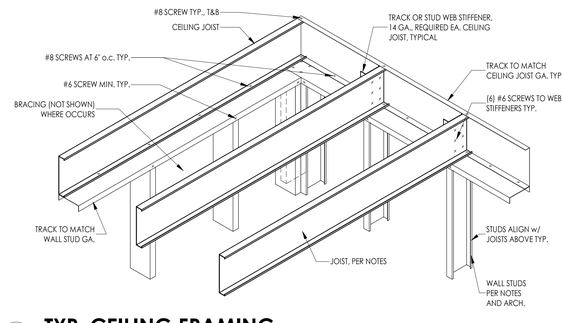

1 COLD-FORMED STEEL FRAMING NOTES
12" = 1'-0"

EXAMPLE: **800S162-54**
SIZE — SHAPE — THICKNESS — FLANGE WIDTH

SIZE	SHAPE	FLANGE WIDTH	THICKNESS	REMARKS
162 = 1 5/8"	S	125 = 1 1/4"	18 = 25 GA.	
162 = 1 5/8"	T	137 = 1 3/8"	27 = 22 GA.	
162 = 1 5/8"	U	162 = 1 5/8"	30 = 20 GA.	DRYWALL
162 = 1 5/8"	F	200 = 2"	33 = 20 GA.	STRUCTURAL
162 = 1 5/8"			43 = 18 GA.	
162 = 1 5/8"			54 = 16 GA.	
162 = 1 5/8"			68 = 14 GA.	
162 = 1 5/8"			97 = 12 GA.	
162 = 1 5/8"				
162 = 1 5/8"				

NOTES:
1. SEE GENERAL NOTES, SECTION I FOR ADDITIONAL COLD-FORMED STEEL INFORMATION.
2. SECTION PROPERTIES OF ALL MEMBERS SHALL MEET OR EXCEED THOSE OF PRODUCTS MANUFACTURED IN ACCORDANCE WITH SSMA STANDARDS.

12 CEILING FRAMING AT SHARED WALL
1 1/2" = 1'-0"

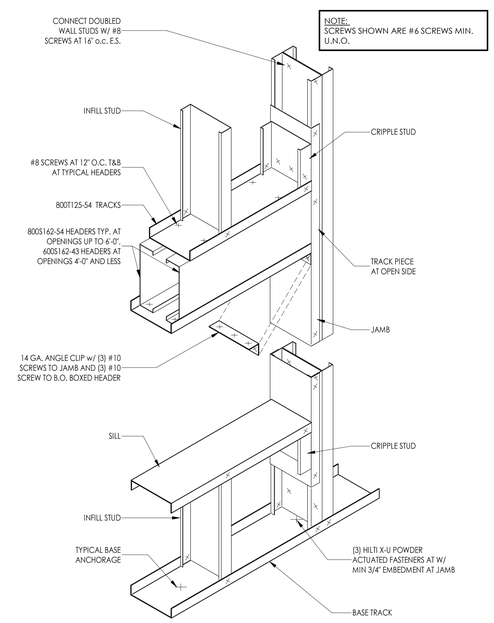

9 CEILING FRAMING - TRACK
1 1/2" = 1'-0"

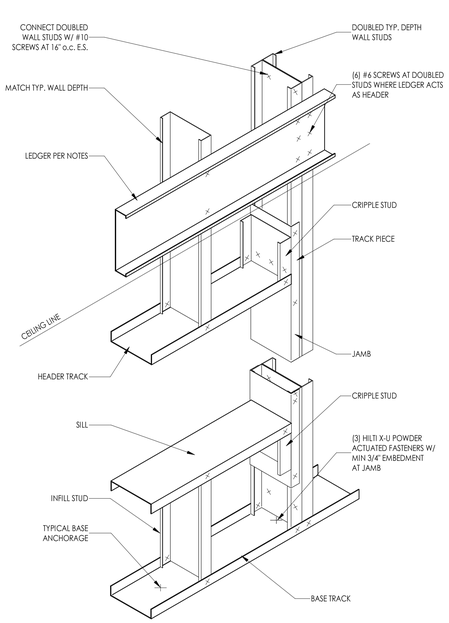

5 TYP. CEILING FRAMING
1 1/2" = 1'-0"

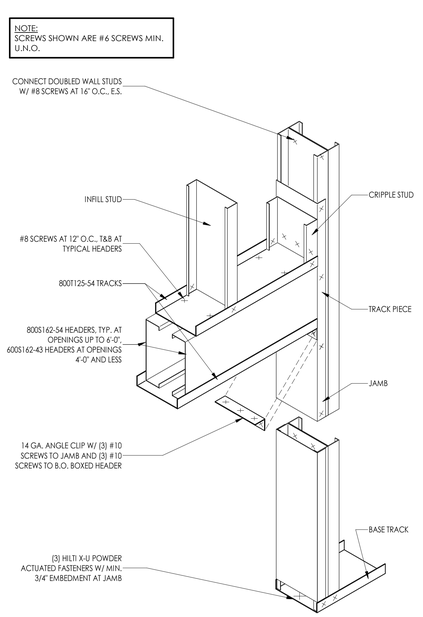

2 CFS - TYP. STEEL STUD FRAMING DESIGNATIONS
1/2" = 1'-0"

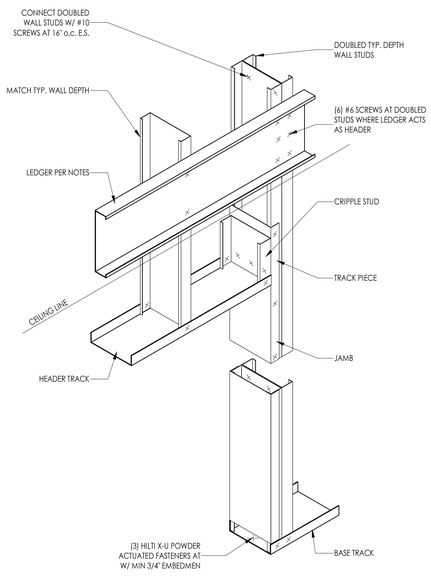

13 WINDOW HEADER - BEARING
1 1/2" = 1'-0"

10 WINDOW HEADER - NON-BEARING
1 1/2" = 1'-0"

6 DOOR HEADER - BEARING
1 1/2" = 1'-0"

3 DOOR HEADER - NON-BEARING
1 1/2" = 1'-0"

tsk
225 South Arlington Avenue
Reno NV, 89501
phone: 775.857.2949
fax: 775.857.2403
www.tska.com

NOT FOR CONSTRUCTION

THESE DRAWINGS AND SPECIFICATIONS ARE THE PROPERTY OF TATE SNYDER KIMSEY ARCHITECTS AND MAY NOT BE REPRODUCED OR USED FOR ANY PURPOSE WITHOUT THE ARCHITECTS WRITTEN CONSENT. AS INSTRUMENTS OF SERVICE, THESE DOCUMENTS ARE NOT FINAL AND READY FOR USE, AND THEREFORE NOT VALID, UNLESS THEY ARE SEALED, SIGNED AND DATED.
Copyright, Ltd 2022

Consultant

NELSON WILCOX
STRUCTURAL ENGINEERS
225 S Arlington Ave, Ste B, Reno, NV 89501
www.nelson-wilcox.com

PLEASE RECYCLE

Project
CITY OF FERNLEY
CRRC

Job No: 21-058.00

Owner
CITY OF FERNLEY

Job No: 20-22

50% CONSTRUCTION DOCUMENTS

REVISIONS		
REV	DATE	DESCRIPTION

Sheet Title
TYP. INTERIOR COLD-FORMED STEEL DETAILS

Date: JANUARY 19, 2023
Sheet No:
S0.9

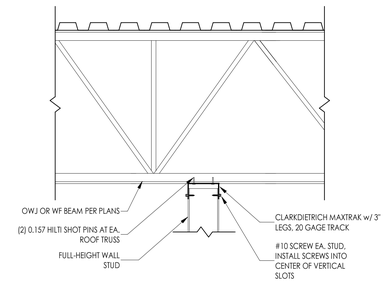

PERPENDICULAR TO JOISTS (OPTION 2)

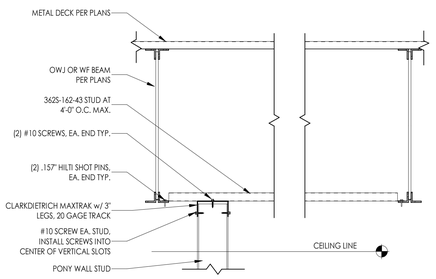

PARALLEL, BETWEEN JOISTS (OPTION 2)

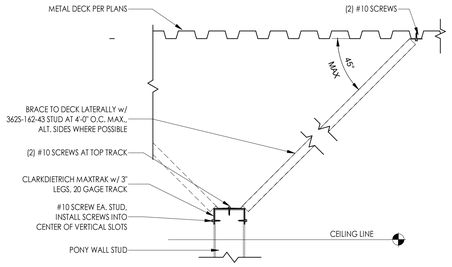

PERPENDICULAR TO JOISTS (OPTION 1)

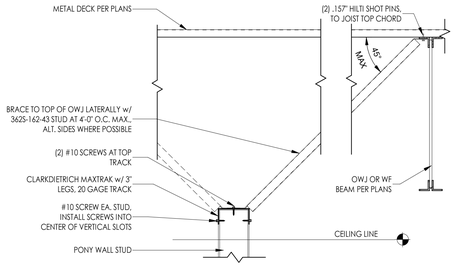

PARALLEL, BETWEEN JOISTS (OPTION 1)

5 INTERIOR PONY WALL BRACING TO ROOF

1" = 1'-0"

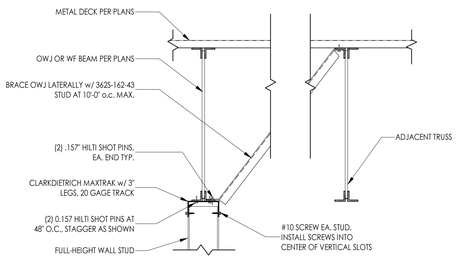

PARALLEL TO BOT. OF JOIST

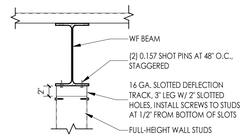

PARALLEL TO BOT. OF BEAM

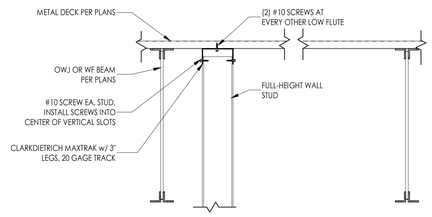

PARALLEL, BETWEEN JOISTS

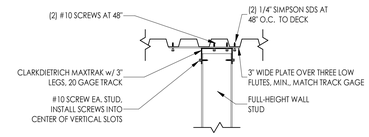

PERPENDICULAR TO JOISTS

1 INTERIOR FULL-HEIGHT WALL CONNECTION TO ROOF STRUCTURE

1" = 1'-0"

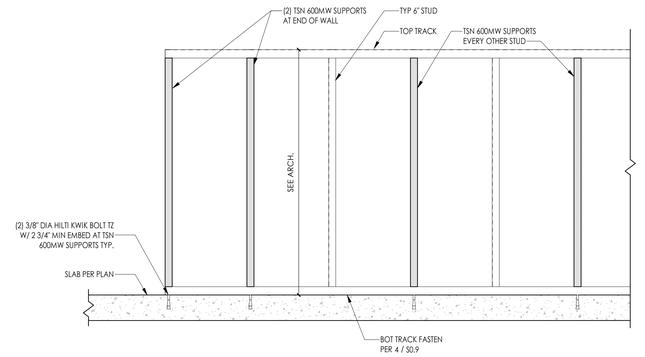

2 PONY WALL DETAIL

1" = 1'-0"

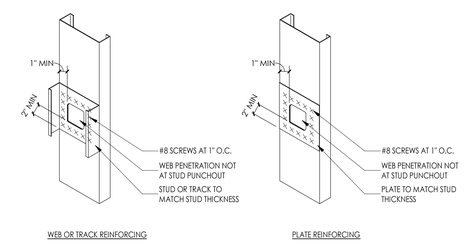

3 METAL STUD WEB REINFORCING

1 1/2" = 1'-0"

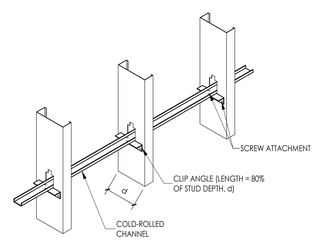

4 MID-WALL BRACING

1" = 1'-0"

tsk
225 South Arlington Avenue
Reno NV, 89501
phone: 775.857.2949
fax: 775.857.2403
www.tska.com

NOT FOR CONSTRUCTION

THESE DRAWINGS AND SPECIFICATIONS ARE THE PROPERTY OF TATE SNYDER KIMSEY ARCHITECTS AND MAY NOT BE REPRODUCED OR USED FOR ANY PURPOSE WITHOUT THE ARCHITECTS WRITTEN CONSENT. AS INSTRUMENTS OF SERVICE, THESE DOCUMENTS ARE NOT FINAL AND READY FOR USE, AND THEREFORE NOT VALID, UNLESS THEY ARE SEALED, SIGNED AND DATED.

Copyright, Ltd 2022

Consultant

NELSON WILCOX
STRUCTURAL ENGINEERS
225 S Arlington Ave, Ste B, Reno, NV 89501
www.nelson-wilcox.com

PLEASE RECYCLE

Project
CITY OF FERNLEY CRRC

Job No: 21-058.00

Owner
CITY OF FERNLEY

Job No: 20-22

50% CONSTRUCTION DOCUMENTS

REVISIONS		
REV	DATE	DESCRIPTION

Sheet Title
TYP. INTERIOR COLD-FORMED STEEL DETAILS

Date: JANUARY 19, 2023
Sheet No:
S0.10

DESIGN CRITERIA:
LIGHT FIXTURE EPA MAXIMUM PER CHART (TOTAL EPA)
130 MPH BASIC WIND SPEED
EXPOSURE C
5" MAX. POST WIDTH
40 LB. FIXTURE WEIGHT MAX.
385 LB POST WEIGHT MAX

CONTACT STRUCTURAL ENGINEER IF ALTERNATE CONDITIONS EXIST

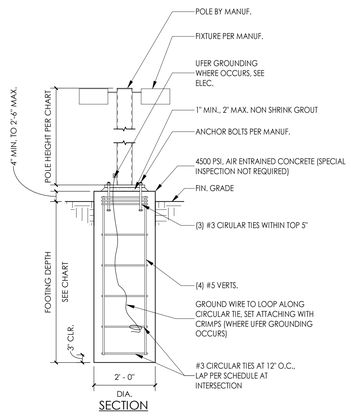

SECTION

LIGHT POLE FOOTING DEPTH CHART		
LIGHT POLE HEIGHT	2 SQ. FT. EPA MAX.	4 SQ. FT. EPA MAX.
	FOOTING DEPTH	FOOTING DEPTH
15'-0" MAX.	3' - 6"	4' - 0"
25'-0" MAX.	4' - 9"	5' - 0"
30'-0" MAX.	5' - 0"	5' - 6"

4 CONCRETE LIGHT POLE FOUNDATION
1/2" = 1'-0"

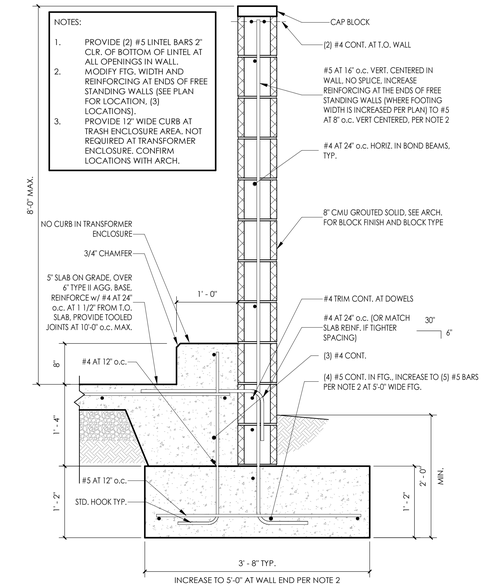

1 CMU FREE-STANDING WALL DETAIL
1" = 1'-0"

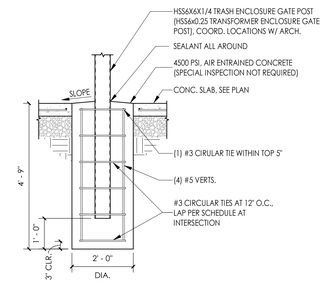

SECTION

2 TRASH ENCLOSURE GATE POST FOUNDATION
1/2" = 1'-0"

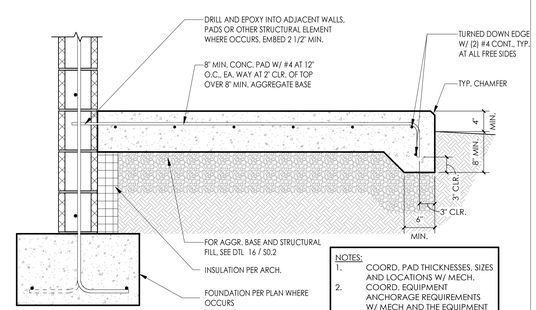

3 CONC. TYP. EXTERIOR EQUIPMENT PAD
1" = 1'-0"

tsk
225 South Arlington Avenue
Reno NV, 89501
phone: 775.857.2949
fax: 775.857.2403
www.tska.com

NOT FOR CONSTRUCTION

THESE DRAWINGS AND SPECIFICATIONS ARE THE PROPERTY OF TATE SNYDER KIMSEY ARCHITECTS AND MAY NOT BE REPRODUCED OR USED FOR ANY PURPOSE WITHOUT THE ARCHITECTS WRITTEN CONSENT. AS INSTRUMENTS OF SERVICE, THESE DOCUMENTS ARE NOT FINAL AND READY FOR USE, AND THEREFORE NOT VALID, UNLESS THEY ARE SEALED, SIGNED AND DATED.
Copyright, Ltd 2022

Consultant

NELSON WILCOX
STRUCTURAL ENGINEERS
225 S Arlington Ave, Ste B, Reno, NV 89501
www.nelson-wilcox.com

PLEASE RECYCLE

Project
CITY OF FERNLEY CRRC

Job No: 21-058.00

Owner
CITY OF FERNLEY

Job No: 20-22

50% CONSTRUCTION DOCUMENTS

REVISIONS		
REV	DATE	DESCRIPTION

Sheet Title
TYP. SITE DETAILS

Date: JANUARY 19, 2023
Sheet No:
S0.11

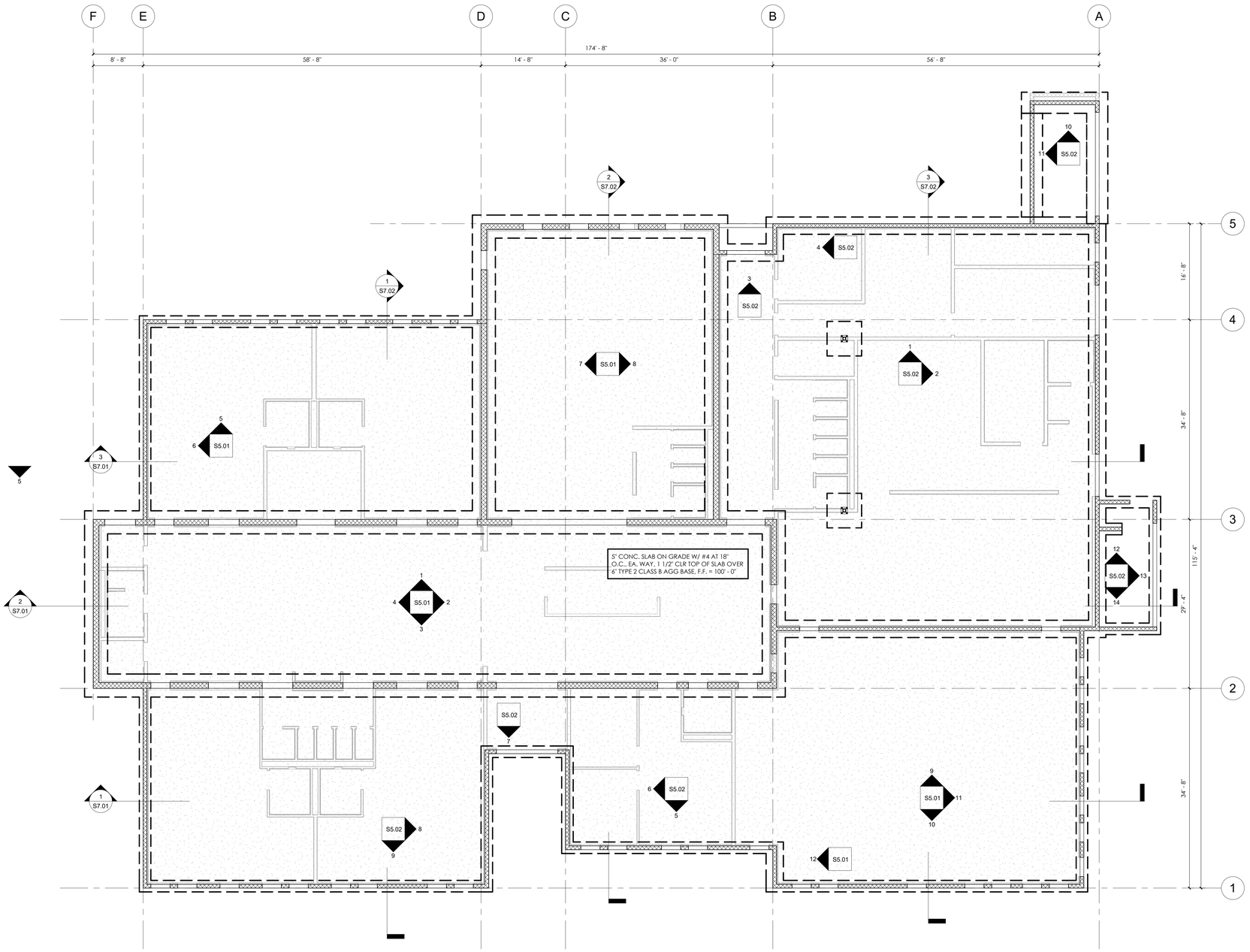

1 **OVERALL FOUNDATION PLAN - BASE BID**

1/8" = 1'-0"

GENERAL NOTES

KEYNOTES

LEGEND

KEYPLAN

tsk
225 South Arlington Avenue
Reno NV, 89501
phone: 775.857.2949
fax: 775.857.2403
www.tska.com

NOT FOR CONSTRUCTION

THESE DRAWINGS AND SPECIFICATIONS ARE THE PROPERTY OF TATE SNYDER KIMSEY ARCHITECTS AND MAY NOT BE REPRODUCED OR USED FOR ANY PURPOSE WITHOUT THE ARCHITECTS WRITTEN CONSENT.
AS INSTRUMENTS OF SERVICE, THESE DOCUMENTS ARE NOT FINAL AND READY FOR USE, AND THEREFORE NOT VALID, UNLESS THEY ARE SEALED, SIGNED AND DATED.
Copyright, Ltd 2022

Consultant

NELSON WILCOX
STRUCTURAL ENGINEERS
225 S Arlington Ave, Ste B, Reno, NV 89501
www.nelson-wilcox.com

PLEASE RECYCLE

Project
CITY OF FERNLEY CRRC

Job No: 21-058.00

Owner
CITY OF FERNLEY

Job No: 20-22

50% CONSTRUCTION DOCUMENTS

REVISIONS		
REV	DATE	DESCRIPTION

Sheet Title
OVERALL FOUNDATION PLAN - BASE BID

Date: JANUARY 19, 2023
Sheet No:

S1.01

BASE BID FOUNDATION PLAN NOTES:

1. T.O. EXTERIOR FOOTINGS = 98' - 8" TYP., U.N.O.
2. T.O. INTERIOR FOOTINGS = 98' - 8" TYP., U.N.O.
3. CENTER ALL COLUMN SPOT FOOTINGS BELOW COLUMNS TYP.
4. NO CONDUIT SHALL BE PLACED IN THE SLAB ON GRADE.
5. SEE 15 / S0.2 WHERE UTILITIES ENTER BUILDING OR ARE ADJACENT TO COLUMN FOOTINGS.
6. SEE 16 / S0.2 & GENERAL NOTES FOR ENGINEERING FILL REQUIREMENTS AND SUBGRADE PREPARATION REQUIREMENTS.
7. SEE ARCHITECTURAL AND/OR MECHANICAL/PLUMBING DRAWINGS FOR ANY FLOOR DRAINS OR SINKS, CONTRACTOR TO COORDINATE.
8. SEE 7 / S0.2 FOR TYPICAL SLAB ON GRADE JOINTS. JOINTS TO BE PLACED AT 10'-0" MAX. O.C. AND LOCATED AT ALL RE-ENTRANT SLAB CORNERS, INTERIOR COLUMN LOCATIONS, OR ANY OTHER SLAB ON GRADE DISCONTINUITIES. SEE 12 / S0.2 FOR SLAB ON GRADE DOWELED JOINT INTERSECTIONS.
9. SEE 6 / S0.2 FOR TYPICAL FOUNDATION REINFORCING LAPS AT CORNERS, ENDS, AND INTERSECTIONS.
10. SEE 10 / S0.2 & 11 / S0.2 FOR TYPICAL REINFORCING HOOKS, BENDS AND HOOKS & BENDS FOR TIES.
11. PLACE 15 MIL VAPOR BARRIER BENEATH CONCRETE SLAB (OVER AGGREGATE BASE) AT LOCATIONS WITH TILE FLOORING (OR OTHER FLOORING SENSITIVE TO MOISTURE). SEAL ALL SEAMS AND SEAL AROUND ALL PENETRATIONS PER VAPOR BARRIER MANUFACTURER RECOMMENDATIONS.
12. SEE 5 / S0.3 FOR TYPICAL CMU CONTROL JOINT. SEE -/- FOR TYPICAL CLAY BRICK EXPANSION JOINTS.
13. CONTRACTOR TO VERIFY AND COORDINATE ALL DIMENSIONS AND CONDITIONS WITH ARCH. PRIOR TO FABRICATION OR ERECTION.
14. SEE SHEETS S0.9 & S0.10 FOR TYPICAL INTERIOR WALL DETAILS.

BASE BID CMU WALL SCHEDULE

MARK	TYPE	WIDTH	REINFORCEMENT		FOOTING DOWELS	REMARKS
			VERT.	HORIZ.		
W1	CMU	8"	#5 AT 24" O.C., CENTERED	#4 AT 32" O.C.	TO MATCH VERTS.	(2) #5 (HORIZ) CONT. BARS AT T.O. WALL AND/OR ROOF & FLOOR LINE, SEE DETAILS
W2	CMU	12"	#6 AT 24" O.C., EA. FACE	#5 AT 24" O.C.	TO MATCH VERTS.	(2) #5 (HORIZ) CONT. BARS AT T.O. WALL AND/OR ROOF & FLOOR LINE, SEE DETAILS

NOTES:

1. **SEE WALL ELEVATIONS FOR ADDITIONAL REINFORCING WHERE REQUIRED.**
2. ALL CMU WALLS TO BE FULLY GROUTED.
3. MASONRY SHALL BE CONSTRUCTED OF HOLLOW OPEN END UNITS WHEREVER POSSIBLE AND SHALL BE LAID IN A RUNNING BOND PATTERN.
4. FOLLOW DETAIL 9 / S0.3 FOR MIN. CMU CORNER AND 12B / S0.3 FOR JAMB REINFORCEMENT.
5. JAMB STEEL BARS IN SHORT SHEAR PIERS ARE NOT ADDITIVE TO WALL SCHEDULE STEEL, PLACE THE MORE RESTRICTIVE REINFORCING.
6. PROVIDE HORIZONTAL CORNER BARS AT ALL CORNERS AND INTERSECTING WALLS PER 9 / S0.3.
7. PROVIDE (2) #5 CONT. HORIZONTAL CHORD STEEL AT ALL ROOF AND FLOOR LINE LEVELS PER DETAILS, U.N.O.
8. PROVIDE CONT. HORIZ. #5 BAR OR BARS AT JOIST WALL ANCHORS PER DETAILS (WHERE OCCURS).
9. ALL HORIZONTAL BARS SHALL BE ANCHORED AROUND END VERTICAL REINFORCING BARS AT JAMBS WITH A STANDARD HOOK.
10. PROVIDE CMU REINFORCEMENT LAP SPLICES PER GENERAL NOTES.
11. BARS E.F. SHALL BE PLACED 1/2" CLEAR OF THE INSIDE FACE OF THE CMU SHELL. INCLUDING AT JAMBS.
12. BARS CENTERED SHALL BE CENTERED IN THE CMU WALL, HORIZ. STEEL TO BE PLACED ALONG SIDE.

BASE BID CONTINUOUS FOOTINGS SCHEDULE

MARK	WIDTH	THICK.	REINFORCING CROSSWISE			REINFORCING LENGTHWISE				TOTAL LENGTH	REMARKS
			SIZE	LENGTH	SPACING (O.C.)	NO.	SIZE	LENGTH	SPACING (O.C.)		
CF2.0	2' - 0"	14"	#4	1' - 6"	24"	3	#5	CONT.	8 11/16"	421' - 10 3/8"	CROSSWISE REINF. TO BE CENTERED BETWEEN VERT. WALL REINF.
CF3.0	3' - 0"	14"	#5	2' - 6"	12"	4	#5	CONT.	9 13/16"	212' - 0"	
CF4.0	4' - 0"	14"	#5	3' - 6"	12"	5	#4	CONT.	10 3/8"	434' - 9 9/16"	

BASE BID FOOTING SCHEDULE

MARK	WIDTH	LENGTH	THICK.	REINFORCING CROSSWISE				REINFORCING LENGTHWISE				QUANTITY	REMARKS
				NO.	SIZE	LENGTH	SPACING (O.C.)	NO.	SIZE	LENGTH	SPACING (O.C.)		
F6.0	6' - 0"	6' - 0"	16"	7	#5	5' - 6"	10 7/8"	7	#5	5' - 6"	10 7/8"	2	

BASE BID BASE PLATE / ANCHOR BOLT SCHEDULE

TYPE	QUANTITY	PLATE THICKNESS "T"	GROUT THICKNESS "G"	NUMBER OF ANCHORS	ANCHOR DIAMETER	ANCHOR EMBEDMENT "E"	ANCHOR PROJECTION "P"	CAST-IN OR EPOXY
BP-1	2	3/4"	1 1/2"	4	3/4"	13"	4 1/4"	CAST-IN

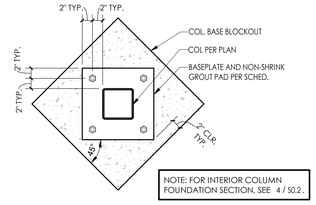

NOTE: FOR INTERIOR COLUMN FOUNDATION SECTION, SEE 4 / S0.2 .

BASE BID - TYP. BASEPLATES

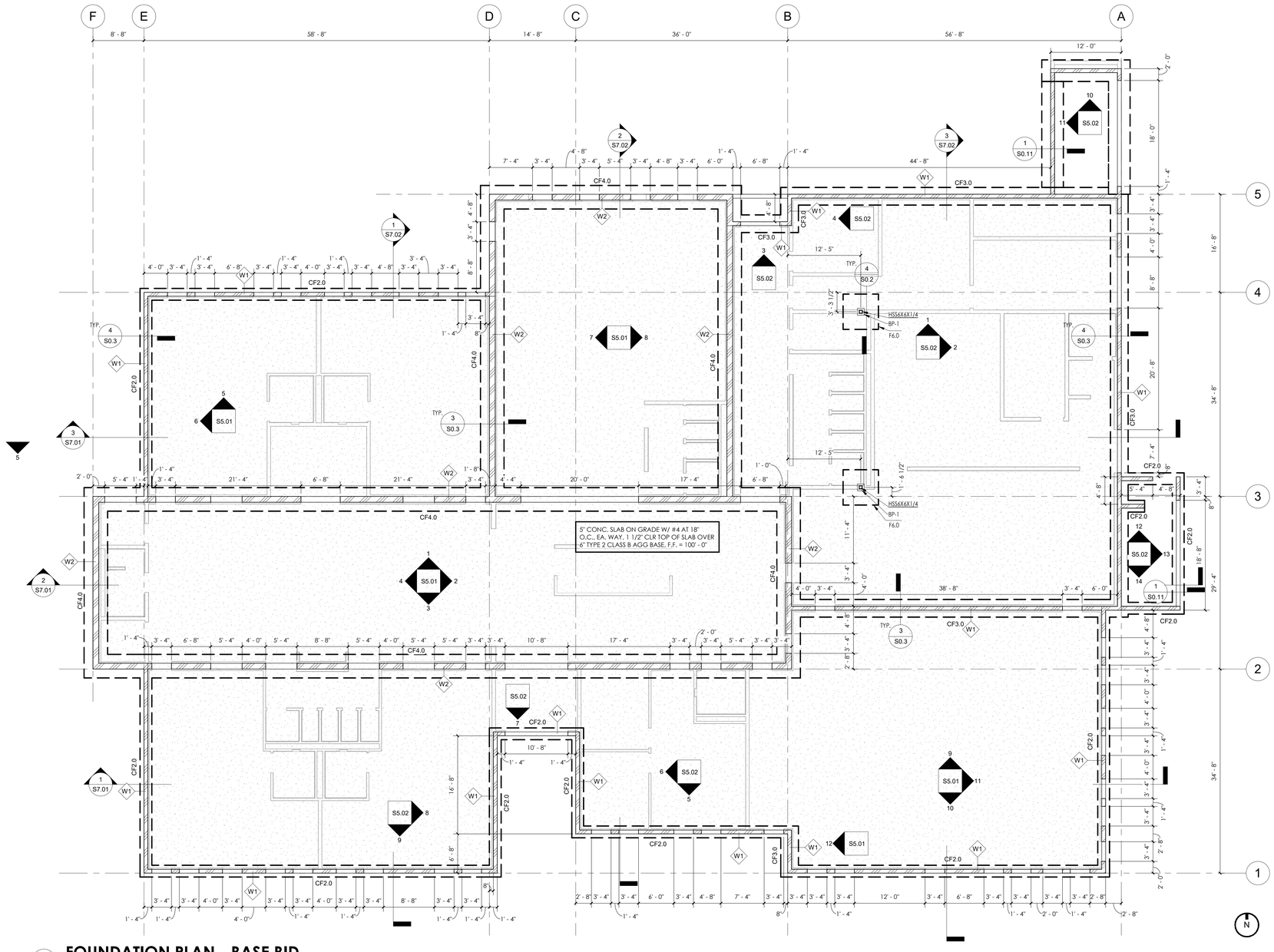

1 FOUNDATION PLAN - BASE BID

1/8" = 1'-0"

GENERAL NOTES

1. SEE WALL ELEVATIONS FOR MORE RESTRICTIVE WALL REINFORCEMENT. VERTICAL WALL REINFORCING SHALL BE EMBEDDED IN FOUNDATIONS TO MATCH VERTICAL AND TYPICAL REINFORCING IN ELEVATIONS.
2. CONTRACTOR SHALL PROVIDE CONSTRUCTION JOINTS (C.J.) AND CONTROL JOINTS (ALTERNATE S.J. AND D.J.) FOR ALL SLABS ON GRADE IN ACCORDANCE WITH DETAILS 1 / S0.3 & 7 / S0.2, RESPECTIVELY. A DRAWING SHOWING THE PROPOSED LAYOUT OF ALL SLAB JOINTS SHALL BE SUBMITTED TO THE ARCHITECT FOR REVIEW AND APPROVAL.

KEYNOTES

LEGEND

KEYPLAN

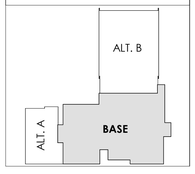

tsk
225 South Arlington Avenue
Reno NV, 89501
phone: 775.857.2949
fax: 775.857.2403
www.tska.com

NOT FOR CONSTRUCTION

THESE DRAWINGS AND SPECIFICATIONS ARE THE PROPERTY OF TATE SNYDER KIMSEY ARCHITECTS AND MAY NOT BE REPRODUCED OR USED FOR ANY PURPOSE WITHOUT THE ARCHITECTS WRITTEN CONSENT. AS INSTRUMENTS OF SERVICE, THESE DOCUMENTS ARE NOT FINAL AND READY FOR USE, AND THEREFORE NOT VALID, UNLESS THEY ARE SEALED, SIGNED AND DATED.

Copyright, Ltd 2022

Consultant

NELSON WILCOX
STRUCTURAL ENGINEERS
225 S Arlington Ave, Ste B, Reno, NV 89501
www.nelson-wilcox.com

PLEASE RECYCLE

Project
CITY OF FERNLEY CRRC

Job No: 21-058.00

Owner
CITY OF FERNLEY

Job No: 20-22

50% CONSTRUCTION DOCUMENTS

REVISIONS		
REV	DATE	DESCRIPTION

Sheet Title
ENLARGED FOUNDATION PLAN - BASE BID

Date: JANUARY 19, 2023

Sheet No:
S1.11

BASE BID ROOF FRAMING PLAN NOTES:

1. B.O. DECK= TOP OF FRAMING (BOTTOM OF DECK) ELEVATION ABOVE THE FINISHED FIRST FLOOR.
2. T.O.S.= TOP OF WIDE FLANGE GIRDER ELEVATION ABOVE FINISHED FIRST FLOOR.
3. SEE FOR STEEL JOIST AND JOIST GIRDER DESIGN CRITERIA.
4. SEE 3 / S0.6 & 4 / S0.6 FOR ROOF HUNG PIPING SUPPORTS.
5. FIRE SPRINKLER CONTRACTOR SHALL LAY OUT FIRE SPRINKLER LINES SO THAT NO LINE PASSES UNDER SKYLIGHT/SMOKEVENTS OR FUTURE MECHANICAL UNITS (WHERE THESE ITEMS OCCUR).
6. FOR ROOF HATCH WITH LADDER ACCESS, SEE ARCHITECTURAL.
7. STEEL JOIST AND JOIST GIRDER SUPPLIER SHALL SUBMIT STRUCTURAL CALCULATIONS, SHOP, AND ERECTION DRAWINGS SEALED AND SIGNED BY A NEVADA REGISTERED CIVIL OR STRUCTURAL ENGINEER TO THE ENGINEER OF RECORD WHO AGREES TO REVIEW THESE DOCUMENTS FOR ACCEPTANCE PRIOR TO FABRICATION. STRUCTURAL CALCULATIONS, SHOP AND ERECTION DRAWINGS SHALL BE SUBMITTED TO THE BUILDING DEPARTMENT FOR ACCEPTANCE AFTER THE ENGINEER OF RECORD HAS NOTED HIS/HER ACCEPTANCE.
8. JOIST AND JOIST GIRDER DRAWINGS SHALL SHOW COMPLIANCE WITH THE STANDARD SPECIFICATIONS FOR STEEL JOISTS, K-SERIES, LH-SERIES, DLH-SERIES AND JOIST GIRDERS, 44TH EDITION, PUBLISHED BY THE STEEL JOIST INSTITUTE.
9. JOIST AND JOIST GIRDERS SHALL BE IDENTIFIED AS TO TYPE, SIZE, AND MANUFACTURER BY TAGGING OR OTHER SUITABLE MEANS AT THE TIME OF MANUFACTURE OR FABRICATION. SUCH IDENTIFICATION SHALL BE MAINTAINED CONTINUOUSLY TO THE POINT OF THEIR INSTALLATION IN A STRUCTURE.

BASE BID METAL DECK SCHEDULE

MARK	DECK TYPE (SEE NOTE 1)	DECK SIZE	DECK ATTACHMENT ZONE	DIAPHRAGM CONNECTIONS (SEE NOTES 2, 3 AND 6)		
				LOW FLUTES		SIDE SEAMS
				PERPENDICULAR TO SUPPORT	PARALLEL TO SUPPORT	
PLB-I	PLB-36	1 1/2" x 18 GA	1	FASTENERS AT 36/4 PATTERN	FASTENERS AT 12" O.C. MAX	VSC2 AT 24" O.C. MAX

NOTES:

1. METAL DECK SHALL BE AS SPECIFIED BY ASC, VERCO, VULCRAFT, EPIC OR APPROVED EQUAL.
2. CONNECTIONS SHALL BE PLACED IN ACCORDANCE WITH THE DECK MANUFACTURERS STANDARD PATTERN AND REQUIREMENTS.
3. PW = 3/4" PUDDLE WELD, VSC2 = VERCO PUNCHLOK II SIDELAP CONNECTION.
4. DECK SHALL BE PLACED IN EITHER A 2-SPAN OR 3-SPAN CONDITION. SINGLE DECK SPANS WILL NOT BE ALLOWED UNLESS SPECIFICALLY NOTED.
5. REFER TO DECK ATTACHMENT DIAGRAM FOR DECK ATTACHMENT ZONE.
6. FASTENERS SHALL BE #12 SCREWS FOR SUPPORT STEEL THICKNESS LESS THAN 1/8". FASTENERS SHALL BE HILTI HSN-24 FOR SUPPORT STEEL THICKNESS 1/8" TO 3/8". FASTENERS SHALL BE HILTI X-ENP-19 FOR SUPPORT STEEL THICKNESS GREATER THAN 1/4". FOR SUPPORT STEEL THICKNESS BETWEEN 1/4" AND 3/8" (INCLUSIVE), HILTI HSN-24 OR X-ENP-19 FASTENERS MAY BE USED AT CONTRACTOR'S OPTION.

BASE BID JOIST BEARING PLATE SCHEDULE

MARK	PLATE	ANCHOR	WALL ANCHORAGE LOAD (0.6W OR 0.7E)
P4	8" CMU: 3/4" x 5 1/2" x 1' - 3" 12" CMU: 3/4" x 9" x 1' - 3"	(4) 3/4" x 6" NSA AT 4' O.C.	8" CMU: 4.8 KIPS 12" CMU: 8.0 KIPS
P6	8" CMU: 3/4" x 5 1/2" x 1' - 11" 12" CMU: 3/4" x 9" x 1' - 11"	(6) 3/4" x 6" NSA AT 4' O.C.	8" CMU: 7.2 KIPS 12" CMU: 12.0 KIPS

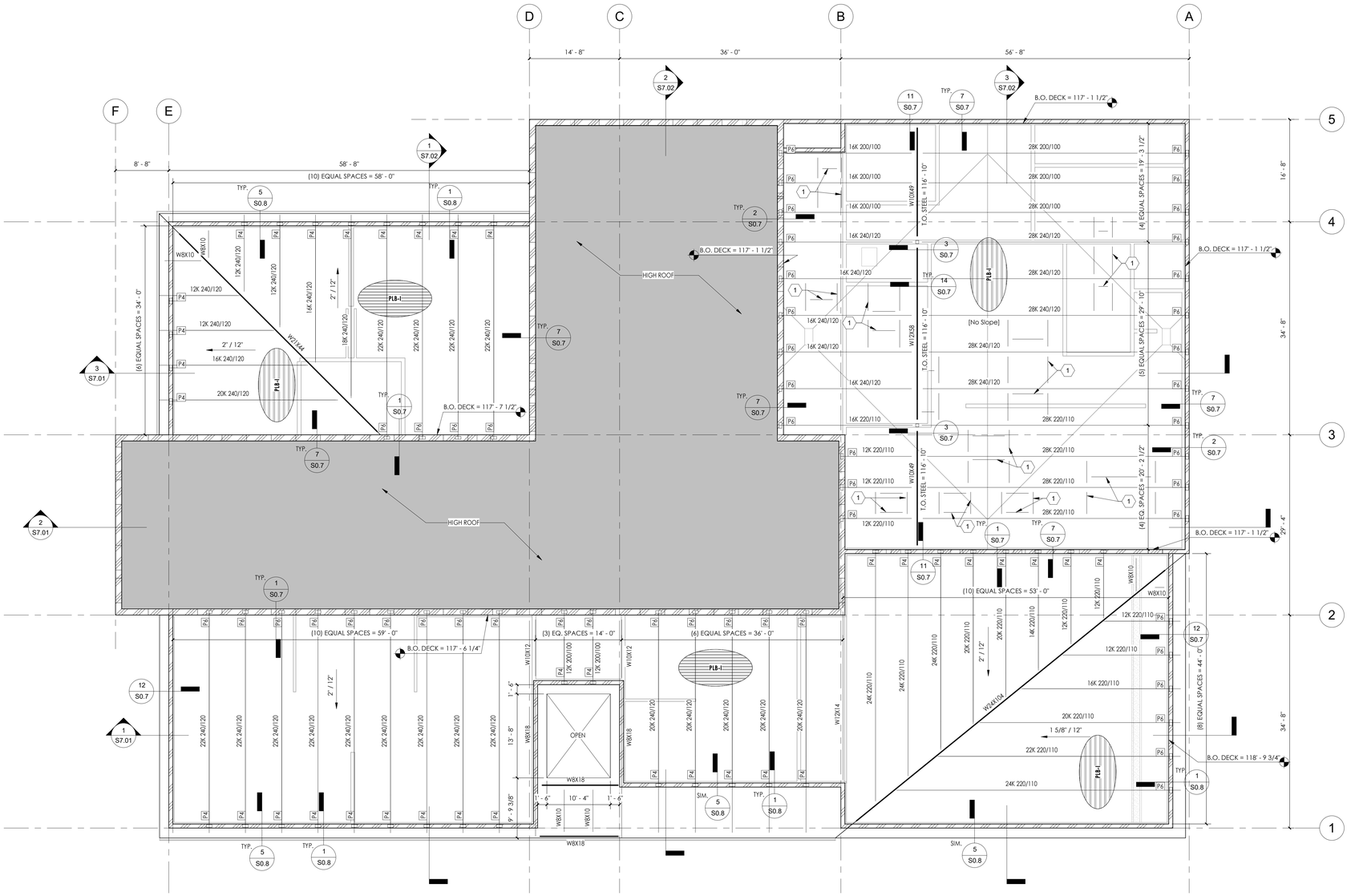

1 **BASE BID - LOW ROOF FRAMING PLAN**
1/8" = 1'-0"

GENERAL NOTES

KEYNOTES

1. W8x10 FRAMING UNDER RTU, COORDINATE LOCATIONS WITH MECH. AND APPROVED CURB SUBMITTAL. REFER TO DETAILS 7/S0.6, 12/S0.6, AND 1/S0.5.
2. FAN MOUNT LOCATION REFER TO DETAIL 10/S0.6.
3. 30" DIA. DUCT THRU JOIT. VERIFY SIZE ADN LOCATION WITH MECH. DRAWINGS.
4. 2" SEISMIC JOINT

LEGEND

P# JOIST BEARING PLATE PER SCHED.

KEYPLAN

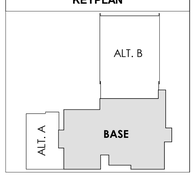

tsk
225 South Arlington Avenue
Reno NV, 89501
phone: 775.857.2949
fax: 775.857.2403
www.tska.com

NOT FOR CONSTRUCTION

THESE DRAWINGS AND SPECIFICATIONS ARE THE PROPERTY OF TATE SNYDER KIMSEY ARCHITECTS AND MAY NOT BE REPRODUCED OR USED FOR ANY PURPOSE WITHOUT THE ARCHITECTS WRITTEN CONSENT. AS INSTRUMENTS OF SERVICE, THESE DOCUMENTS ARE NOT FINAL AND READY FOR USE, AND THEREFORE NOT VALID, UNLESS THEY ARE SEALED, SIGNED AND DATED.
Copyright, Ltd 2022

Consultant

NELSON WILCOX
STRUCTURAL ENGINEERS
225 S Arlington Ave, Ste B, Reno, NV 89501
www.nelson-wilcox.com

PLEASE RECYCLE

Project
CITY OF FERNLEY CRRC

Job No: 21-058.00

Owner
CITY OF FERNLEY

Job No: 20-22

50% CONSTRUCTION DOCUMENTS

REVISIONS

REV	DATE	DESCRIPTION

Sheet Title
LOW ROOF FRAMING PLAN - BASE BID

Date: JANUARY 19, 2023
Sheet No:
S4.01

BASE BID ROOF FRAMING PLAN NOTES:

1. B.O. DECK= TOP OF FRAMING (BOTTOM OF DECK) ELEVATION ABOVE THE FINISHED FIRST FLOOR.
2. T.O.S.= TOP OF WIDE FLANGE GIRDER ELEVATION ABOVE FINISHED FIRST FLOOR.
3. SEE FOR STEEL JOIST AND JOIST GIRDER DESIGN CRITERIA.
4. SEE 3 / S0.6 & 4 / S0.6 FOR ROOF HUNG PIPING SUPPORTS.
5. FIRE SPRINKLER CONTRACTOR SHALL LAY OUT FIRE SPRINKLER LINES SO THAT NO LINE PASSES UNDER SKYLIGHT/SMOKEVENTS OR FUTURE MECHANICAL UNITS (WHERE THESE ITEMS OCCUR).
6. FOR ROOF HATCH WITH LADDER ACCESS, SEE ARCHITECTURAL.
7. STEEL JOIST AND JOIST GIRDER SUPPLIER SHALL SUBMIT STRUCTURAL CALCULATIONS, SHOP, AND ERECTION DRAWINGS SEALED AND SIGNED BY A NEVADA REGISTERED CIVIL OR STRUCTURAL ENGINEER TO THE ENGINEER OF RECORD WHO AGREES TO REVIEW THESE DOCUMENTS FOR ACCEPTANCE PRIOR TO FABRICATION. STRUCTURAL CALCULATIONS, SHOP AND ERECTION DRAWINGS SHALL BE SUBMITTED TO THE BUILDING DEPARTMENT FOR ACCEPTANCE AFTER THE ENGINEER OF RECORD HAS NOTED HIS/HER ACCEPTANCE.
8. JOIST AND JOIST GIRDER DRAWINGS SHALL SHOW COMPLIANCE WITH THE STANDARD SPECIFICATIONS FOR STEEL JOISTS, K-SERIES, LH-SERIES, DLH-SERIES AND JOIST GIRDERS, 44TH EDITION, PUBLISHED BY THE STEEL JOIST INSTITUTE.
9. JOIST AND JOIST GIRDERS SHALL BE IDENTIFIED AS TO TYPE, SIZE, AND MANUFACTURER BY TAGGING OR OTHER SUITABLE MEANS AT THE TIME OF MANUFACTURE OR FABRICATION. SUCH IDENTIFICATION SHALL BE MAINTAINED CONTINUOUSLY TO THE POINT OF THEIR INSTALLATION IN A STRUCTURE.

BASE BID METAL DECK SCHEDULE

MARK	DECK TYPE (SEE NOTE 1)	DECK SIZE	DECK ATTACHMENT ZONE	DIAPHRAGM CONNECTIONS (SEE NOTES 2, 3 AND 6)		
				LOW FLUTES		SIDE SEAMS
				PERPENDICULAR TO SUPPORT	PARALLEL TO SUPPORT	
PLB-I	PLB-36	1 1/2" x 18 GA	1	FASTENERS AT 36/4 PATTERN	FASTENERS AT 12" O.C. MAX	VSC2 AT 24" O.C. MAX

NOTES:

1. METAL DECK SHALL BE AS SPECIFIED BY ASC, VERCO, VULCRAFT, EPIC OR APPROVED EQUAL.
2. CONNECTIONS SHALL BE PLACED IN ACCORDANCE WITH THE DECK MANUFACTURERS STANDARD PATTERN AND REQUIREMENTS.
3. PW = 3/4" PUDDLE WELD. VSC2 = VERCO PUNCHLOK II SIDELAP CONNECTION.
4. DECK SHALL BE PLACED IN EITHER A 2-SPAN OR 3-SPAN CONDITION, SINGLE DECK SPANS WILL NOT BE ALLOWED UNLESS SPECIFICALLY NOTED.
5. REFER TO DECK ATTACHMENT DIAGRAM FOR DECK ATTACHMENT ZONE.
6. FASTENERS SHALL BE #12 SCREWS FOR SUPPORT STEEL THICKNESS LESS THAN 1/8". FASTENERS SHALL BE HILTI HSN-24 FOR SUPPORT STEEL THICKNESS 1/8" TO 3/8". FASTENERS SHALL BE HILTI X-ENP-19 FOR SUPPORT STEEL THICKNESS GREATER THAN 1/4". FOR SUPPORT STEEL THICKNESS BETWEEN 1/4" AND 3/8" (INCLUSIVE), HILTI HSN-24 OR X-ENP-19 FASTENERS MAY BE USED AT CONTRACTOR'S OPTION.

BASE BID JOIST BEARING PLATE SCHEDULE

MARK	PLATE	ANCHOR	WALL ANCHORAGE LOAD (0.6W OR 0.7E)
P4	8" CMU: 3/4" x 5 1/2" x 1' - 3" 12" CMU: 3/4" x 9" x 1' - 3"	(4) 3/4" x 6" NSA AT 4" O.C.	8" CMU: 4.8 KIPS 12" CMU: 8.0 KIPS

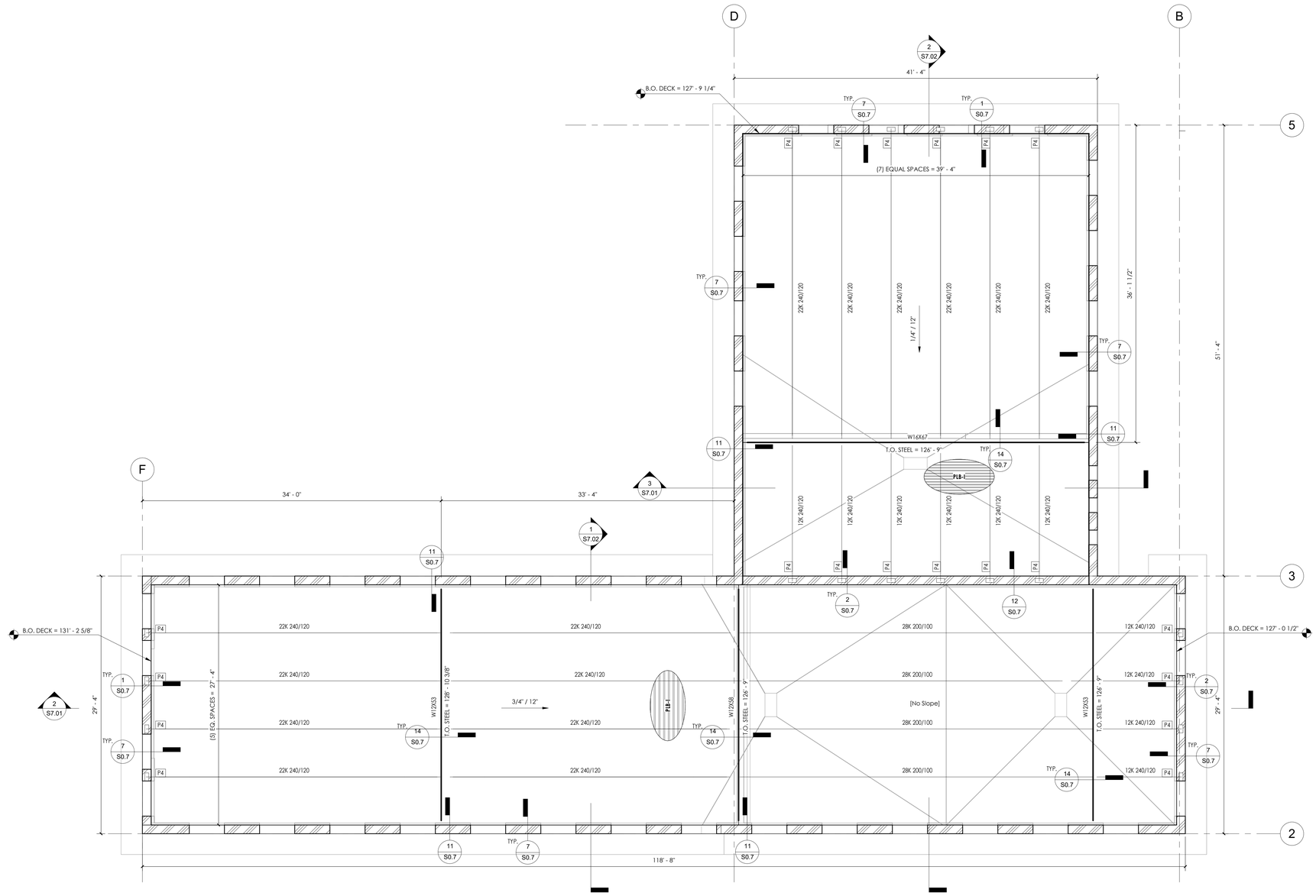

1 BASE BID - HIGH ROOF FRAMING PLAN

3/16" = 1'-0"

GENERAL NOTES

KEYNOTES

LEGEND

P# JOIST BEARING PLATE PER SCHED.

KEYPLAN

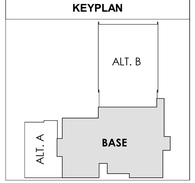

tsk
225 South Arlington Avenue
Reno NV, 89501
phone: 775.857.2949
fax: 775.857.2403
www.tska.com

NOT FOR CONSTRUCTION

THESE DRAWINGS AND SPECIFICATIONS ARE THE PROPERTY OF TATE SNYDER KIMSEY ARCHITECTS AND MAY NOT BE REPRODUCED OR USED FOR ANY PURPOSE WITHOUT THE ARCHITECTS WRITTEN CONSENT. AS INSTRUMENTS OF SERVICE, THESE DOCUMENTS ARE NOT FINAL AND READY FOR USE, AND THEREFORE NOT VALID, UNLESS THEY ARE SEALED, SIGNED AND DATED.

Copyright, Ltd 2022

Consultant

NELSON WILCOX
STRUCTURAL ENGINEERS
225 S Arlington Ave, Ste B, Reno, NV 89501
www.nelson-wilcox.com

PLEASE RECYCLE

Project
CITY OF FERNLEY CRRC

Job No: 21-058.00

Owner
CITY OF FERNLEY

Job No: 20-22

50% CONSTRUCTION DOCUMENTS

REVISIONS

REV	DATE	DESCRIPTION

Sheet Title
HIGH ROOF FRAMING PLAN - BASE BID

Date: JANUARY 19, 2023

Sheet No:
S4.02

BASE BID TYP. JOIST DESIGN CRITERIA

1. JOISTS AND JOIST GIRDERS SHALL BE DESIGNED BY THE JOIST MANUFACTURER IN ACCORDANCE WITH THE STEEL JOIST INSTITUTE (SJI) AND THE 2018 IBC. THE JOIST DESIGNATIONS INDICATED IN THE CONSTRUCTION DOCUMENTS SHALL BE CONSIDERED MINIMUMS. FINAL DESIGN AND DESIGNATION SHALL BE BY THE JOIST MANUFACTURER, BASED ON THE LOADING CRITERIA PRESENTED IN THE CONSTRUCTION DOCUMENTS, AND BE OF THE DEPTHS SHOWN ON THE DRAWINGS.
2. IN ADDITION TO THE LOADS INDICATED, JOISTS AND JOIST GIRDERS SHALL BE DESIGNED FOR ALL SPECIAL LOADS INDICATED ON THE PLANS AND DETAILS, INCLUDING THE MECHANICAL LOADS IDENTIFIED ON THE PLANS.
3. DEFLECTIONS OF ALL MEMBERS SHALL BE LIMITED TO L/360 FOR LIVE LOADS AND L/240 FOR TOTAL LOADS, U.N.O.
4. PROVIDE SJI STANDARD CAMBER U.N.O.
5. PROVIDE ALL REQUIRED BRIDGING FOR THE SPANS AND LOADING SHOWN WHETHER INDICATED ON PLANS OR NOT. WHERE INDICATED ON PLANS, LINES OF BRIDGING ARE APPROXIMATE AND SHALL BE ADJUSTED AS NECESSARY BY THE JOIST MANUFACTURER FOR THEIR FINAL DESIGN. THE CONTRACTOR AND JOIST MANUFACTURER SHALL COORDINATE THE LOCATIONS OF BRIDGING WITH MECHANICAL DUCTS, PIPING, OR OTHER ITEMS TO AVOID CONFLICTS. USE X-BRIDGING OR DIAGONAL BRACING AS REQUIRED AT LOCATIONS WHERE LINES OF BRIDGING MUST BE INTERRUPTED BECAUSE OF MECHANICAL DUCTWORK OR OTHER OBSTRUCTIONS. SEE TYPICAL BRIDGING DETAILS.
6. ALL JOISTS SHALL HAVE SEAT DEPTHS (SLOPING WHERE REQUIRED) AND TOP CHORD EXTENSIONS AS INDICATED IN PLANS AND DETAILS.
7. REINFORCE JOISTS PER TYPICAL DETAILS WHERE CONCENTRATED LOADS ARE APPLIED TO JOIST CHORDS FURTHER THAN 6" AWAY FROM PANEL POINTS.
8. JOISTS SHALL BE DESIGNED WITH CLEARANCES AS REQUIRED WHERE DUCTWORK PASSES THROUGH WEB SPACE. THE CONTRACTOR SHALL BE RESPONSIBLE FOR THE FINAL LAYOUT OF THESE DUCTS AND FOR COMMUNICATING THESE REQUIREMENTS TO THE JOIST MANUFACTURER.
9. ALL "LH" AND "K" SERIES JOISTS SHALL BE PROVIDED WITH EITHER 6" OR 3 1/2" HIGH BEARING SEAT AS SHOWN ON THE STRUCTURAL DETAILS.
10. JOISTS SHALL BE DESIGNED FOR THE FOLLOWING LOADS:

LOAD CASE	LOAD
DEAD LOAD	20 PSF AT 1 1/2" DECK
ROOF LIVE LOAD	20 PSF
ROOF SNOW LOAD	9 PSF
WIND UPLIFT (ALLOWABLE)	SEE UPLIFT DIAGRAM
TOP CHORD AND JOIST SEAT AXIAL LOAD (0.6W OR 0.7E WALL ANCHORAGE)	SEE JOIST BEARING SEAT SCHEDULE
JOIST ADD LIVE LOAD ANYWHERE ALONG TOP OR BOTTOM CHORDS (ALL JOISTS AT OR BETWEEN PANEL POINTS)	500 LBS, U.N.O.

ADD LOADS

LOAD CASE	D (DOWN)	0.6W (UP)	0.6W (DOWN)	0.7E (UP OR DOWN)
LC1				
LC2				
LC3				
LC4				
LC5				
LC6				
LC7				
LC8				
LC9				
LC10				
LC11				
LC12				
LC13				
LC14				
LC15				
LC16				

NOTE:
1. SEE DETAILS 14 / S0.6 & 16 / S0.6 FOR MOMENT FRAME BEAM BRACING TO JOISTS AND ROOF FRAMING PLAN FOR BRACE LOCATIONS.

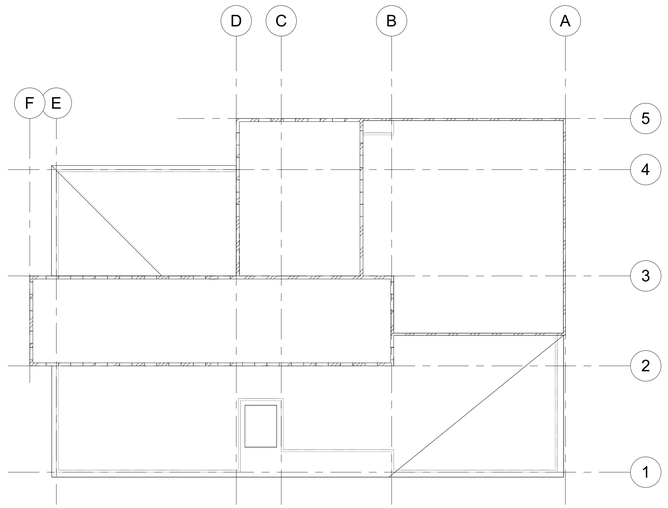

3 BASE BID - LOW ROOF ATTACHMENT ZONE DIAGRAM
1" = 20'-0"

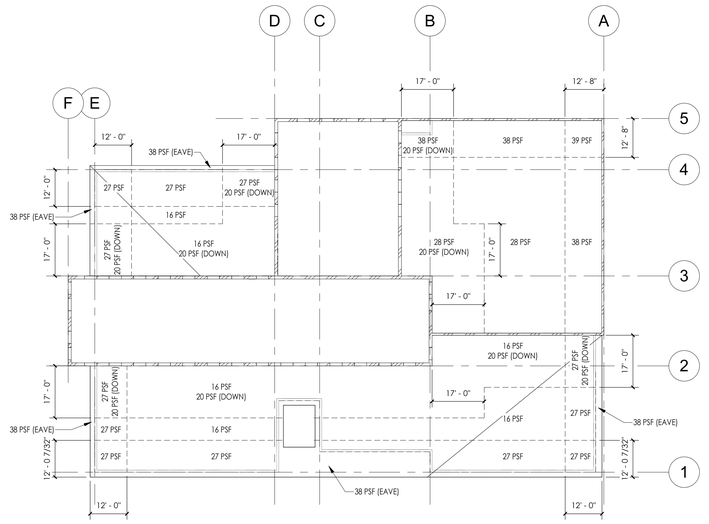

2 BASE BID - LOW ROOF WIND UPLIFT DIAGRAM (0.6W)
1" = 20'-0"

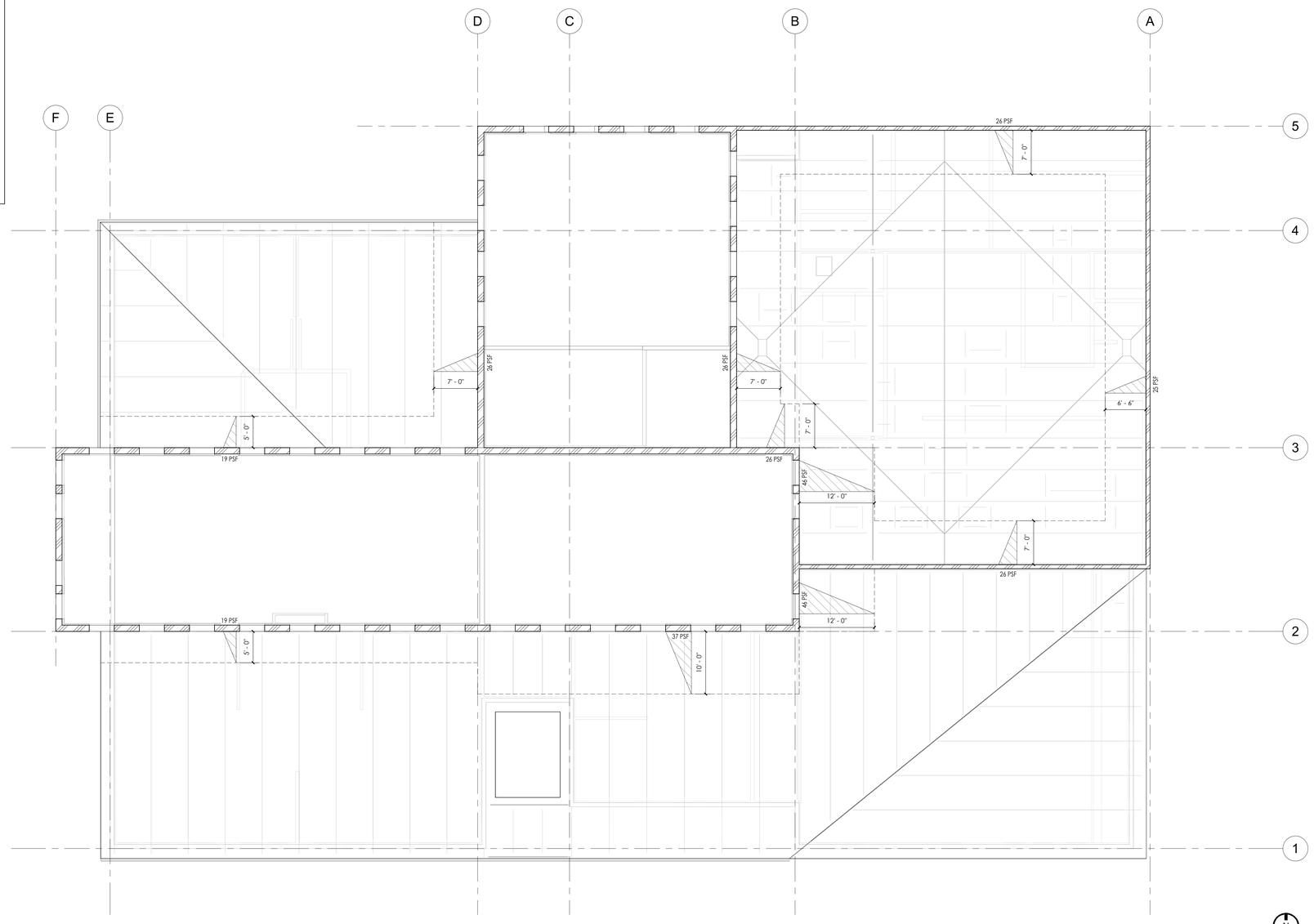

1 BASE BID - LOW ROOF JOIST LOADING PLAN
1/8" = 1'-0"

GENERAL NOTES

KEYNOTES

LEGEND

MECHANICAL EQUIPMENT, SEE MECH.

ROOF DECK OPENING, REINFORCE PER DETAIL 9 / S0.6 ,COORDINATE WITH MECHANICAL

LC#

JOIST POINT ADD LOADS PER ADD LOADS SCHEDULE

LC#

JOIST DISTRIBUTED ADD LOADS PER ADD LOADS SCHED.

SNOW LOADING LEGEND

UNIFORM SNOW LOAD = 23 PSF

TAPERED SNOW DRIFT LOADS PER PLAN

DRIFT LOAD

UNIFORM SNOW LOAD = 9 PSF

DRIFT LENGTH

KEYPLAN

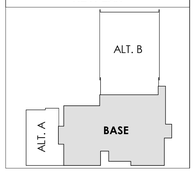

tsk
225 South Arlington Avenue
Reno NV, 89501
phone: 775.857.2949
fax: 775.857.2403
www.tska.com

NOT FOR CONSTRUCTION

THESE DRAWINGS AND SPECIFICATIONS ARE THE PROPERTY OF TATE SNYDER KIMSEY ARCHITECTS AND MAY NOT BE REPRODUCED OR USED FOR ANY PURPOSE WITHOUT THE ARCHITECTS WRITTEN CONSENT. AS INSTRUMENTS OF SERVICE, THESE DOCUMENTS ARE NOT FINAL AND READY FOR USE, AND THEREFORE NOT VALID, UNLESS THEY ARE SEALED, SIGNED AND DATED.

Copyright, Ltd 2022

Consultant

NELSON WILCOX
STRUCTURAL ENGINEERS
225 S Arlington Ave, Ste B, Reno, NV 89501
www.nelson-wilcox.com

PLEASE RECYCLE

Project
CITY OF FERNLEY CRRC

Job No: 21-058.00

Owner
CITY OF FERNLEY

Job No: 20-22

50% CONSTRUCTION DOCUMENTS

REVISIONS		
REV	DATE	DESCRIPTION

Sheet Title
LOW ROOF JOIST LOADING PLANS - BASE BID

Date: JANUARY 19, 2023

Sheet No:
S4.03

BASE BID TYP. JOIST DESIGN CRITERIA

1. JOISTS AND JOIST GIRDERS SHALL BE DESIGNED BY THE JOIST MANUFACTURER IN ACCORDANCE WITH THE STEEL JOIST INSTITUTE (SJI) AND THE 2018 IBC. THE JOIST DESIGNATIONS INDICATED IN THE CONSTRUCTION DOCUMENTS SHALL BE CONSIDERED MINIMUMS. FINAL DESIGN AND DESIGNATION SHALL BE BY THE JOIST MANUFACTURER, BASED ON THE LOADING CRITERIA PRESENTED IN THE CONSTRUCTION DOCUMENTS, AND BE OF THE DEPTHS SHOWN ON THE DRAWINGS.
2. IN ADDITION TO THE LOADS INDICATED, JOISTS AND JOIST GIRDERS SHALL BE DESIGNED FOR ALL SPECIAL LOADS INDICATED ON THE PLANS AND DETAILS, INCLUDING THE MECHANICAL LOADS IDENTIFIED ON THE PLANS.
3. DEFLECTIONS OF ALL MEMBERS SHALL BE LIMITED TO L/360 FOR LIVE LOADS AND L/240 FOR TOTAL LOADS, U.N.O.
4. PROVIDE SJI STANDARD CAMBER U.N.O.
5. PROVIDE ALL REQUIRED BRIDGING FOR THE SPANS AND LOADING SHOWN WHETHER INDICATED ON PLANS OR NOT. WHERE INDICATED ON PLANS, LINES OF BRIDGING ARE APPROXIMATE AND SHALL BE ADJUSTED AS NECESSARY BY THE JOIST MANUFACTURER FOR THEIR FINAL DESIGN. THE CONTRACTOR AND JOIST MANUFACTURER SHALL COORDINATE THE LOCATIONS OF BRIDGING WITH MECHANICAL DUCTS, PIPING, OR OTHER ITEMS TO AVOID CONFLICTS. USE X-BRIDGING OR DIAGONAL BRACING AS REQUIRED AT LOCATIONS WHERE LINES OF BRIDGING MUST BE INTERRUPTED BECAUSE OF MECHANICAL DUCTWORK OR OTHER OBSTRUCTIONS. SEE TYPICAL BRIDGING DETAILS.
6. ALL JOISTS SHALL HAVE SEAT DEPTHS (SLOPING WHERE REQUIRED) AND TOP CHORD EXTENSIONS AS INDICATED IN PLANS AND DETAILS.
7. REINFORCE JOISTS PER TYPICAL DETAILS WHERE CONCENTRATED LOADS ARE APPLIED TO JOIST CHORDS FURTHER THAN 6" AWAY FROM PANEL POINTS.
8. JOISTS SHALL BE DESIGNED WITH CLEARANCES AS REQUIRED WHERE DUCTWORK PASSES THROUGH WEB SPACE. THE CONTRACTOR SHALL BE RESPONSIBLE FOR THE FINAL LAYOUT OF THESE DUCTS AND FOR COMMUNICATING THESE REQUIREMENTS TO THE JOIST MANUFACTURER.
9. ALL "LH" AND "K" SERIES JOISTS SHALL BE PROVIDED WITH EITHER 6" OR 3 1/2" HIGH BEARING SEAT AS SHOWN ON THE STRUCTURAL DETAILS.
10. JOISTS SHALL BE DESIGNED FOR THE FOLLOWING LOADS:

LOAD CASE	LOAD
DEAD LOAD	20 PSF AT 1 1/2" DECK
ROOF LIVE LOAD	20 PSF
ROOF SNOW LOAD	9 PSF
WIND UPLIFT (ALLOWABLE)	SEE UPLIFT DIAGRAM
TOP CHORD AND JOIST SEAT AXIAL LOAD (0.6W OR 0.7E WALL ANCHORAGE)	SEE JOIST BEARING SEAT SCHEDULE
JOIST ADD LIVE LOAD ANYWHERE ALONG TOP OR BOTTOM CHORDS (ALL JOISTS AT OR BETWEEN PANEL POINTS)	500 LBS. U.N.O.

ADD LOADS

LOAD CASE	D (DOWN)	0.6W (UP)	0.6W (DOWN)	0.7E (UP OR DOWN)
LC1				
LC2				
LC3				
LC4				
LC5				
LC6				
LC7				
LC8				
LC9				
LC10				
LC11				
LC12				
LC13				
LC14				
LC15				
LC16				

NOTE:
1. SEE DETAILS 14 / S0.6 & 16 / S0.6 FOR MOMENT FRAME BEAM BRACING TO JOISTS AND ROOF FRAMING PLAN FOR BRACE LOCATIONS.

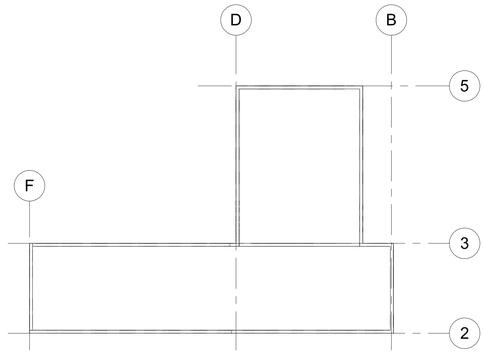

3 BASE BID - HIGH ROOF ATTACHMENT ZONE DIAGRAM
1" = 20'-0"

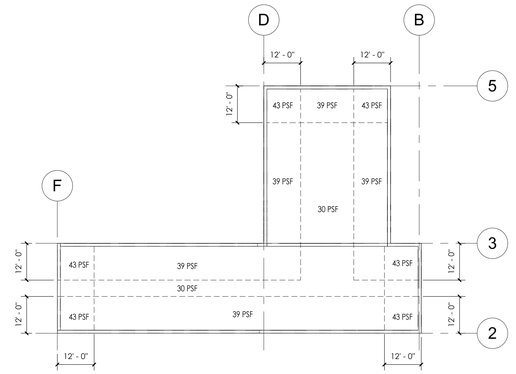

2 BASE BID - HIGH ROOF WIND UPLIFT DIAGRAM (0.6W)
1" = 20'-0"

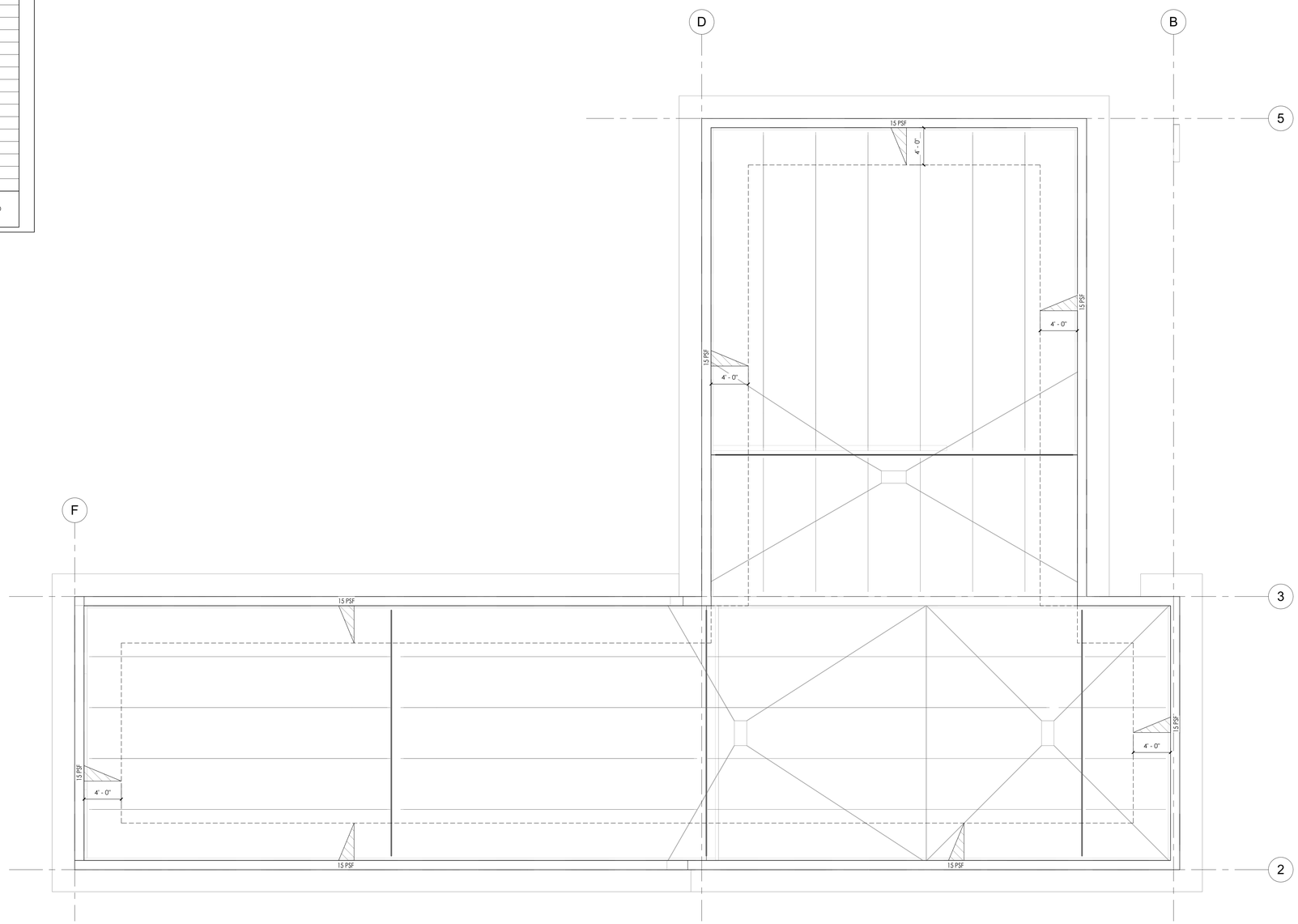

1 BASE BID - HIGH ROOF JOIST LOADING PLAN
3/16" = 1'-0"

GENERAL NOTES

KEYNOTES

LEGEND

- MECHANICAL EQUIPMENT, SEE MECH.
- ROOF DECK OPENING, REINFORCE PER DETAIL 9 / S0.6 ,COORDINATE WITH MECHANICAL
- LC# — JOIST POINT ADD LOADS PER ADD LOADS SCHEDULE
- LC# — JOIST DISTRIBUTED ADD LOADS PER ADD LOADS SCHED.

SNOW LOADING LEGEND

- UNIFORM SNOW LOAD = 23 PSF
- TAPERED SNOW DRIFT LOADS PER PLAN
- DRIFT LOAD
- UNIFORM SNOW LOAD = 9 PSF
- DRIFT LENGTH

KEYPLAN

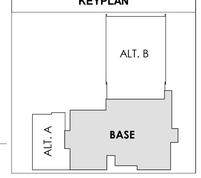

tsk
225 South Arlington Avenue
Reno NV, 89501
phone: 775.857.2949
fax: 775.857.2403
www.tska.com

NOT FOR CONSTRUCTION

THESE DRAWINGS AND SPECIFICATIONS ARE THE PROPERTY OF TATE SNYDER KIMSEY ARCHITECTS AND MAY NOT BE REPRODUCED OR USED FOR ANY PURPOSE WITHOUT THE ARCHITECTS WRITTEN CONSENT. AS INSTRUMENTS OF SERVICE, THESE DOCUMENTS ARE NOT FINAL AND READY FOR USE, AND THEREFORE NOT VALID, UNLESS THEY ARE SEALED, SIGNED AND DATED.

Copyright, Ltd 2022

Consultant

NELSON WILCOX
STRUCTURAL ENGINEERS
225 S Arlington Ave, Ste B, Reno, NV 89501
www.nelson-wilcox.com

PLEASE RECYCLE

Project
CITY OF FERNLEY CRRC

Job No: 21-058.00

Owner
CITY OF FERNLEY

Job No: 20-22

50% CONSTRUCTION DOCUMENTS

REVISIONS		
REV	DATE	DESCRIPTION

Sheet Title
HIGH ROOF JOIST LOADING PLANS - BASE BID

Date: JANUARY 19, 2023
Sheet No:

S4.04

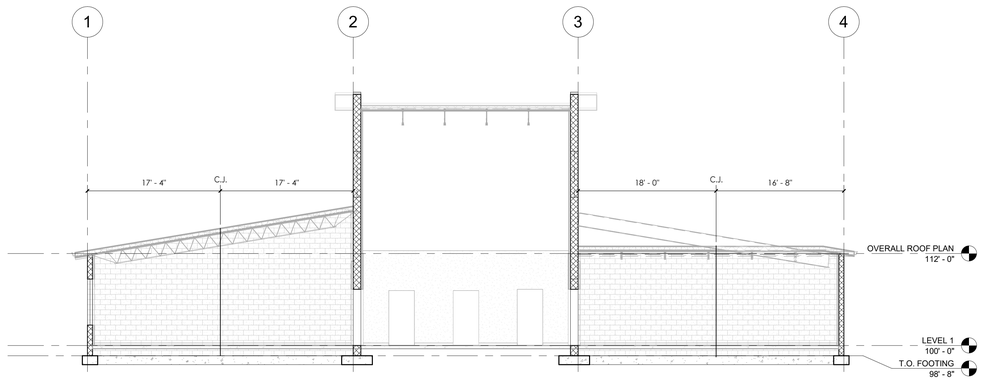

6 WALL ELEVATIONS - GRID E (LOOKING WEST)

1/8" = 1'-0"

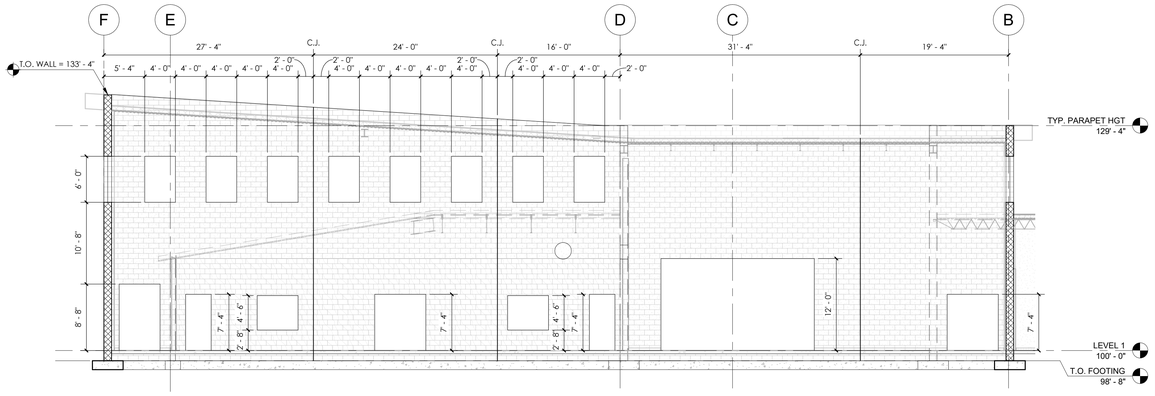

1 WALL ELEVATION - GRID 3 (LOOKING NORTH)

1/8" = 1'-0"

NOTE:

1. WALL OPENINGS LESS THAN 12" IN WIDTH AND/OR HEIGHT NEED NO SPECIAL REINFORCING AND THEREFORE ARE NOT SHOWN FOR CLARITY.
2. COORDINATE ALL MECH./PLUMBING OPENINGS WITH MECH.
3. CONTRACTOR SHALL PROVIDE VERTICAL CONTROL JOINTS (C.J.) IN MASONRY WALLS IN ACCORDANCE WITH DETAIL 5 / S0.3 AT LOCATIONS SHOWN ON ELEVATIONS.
4. ADDITIONAL HORIZONTAL REINFORCEMENT AT CMU PIERS TO EXTEND 32" ABOVE AND BELOW THE ADJACENT WINDOW OPENING(S) AND 32" ABOVE THE ADJACENT DOOR OPENINGS.
5. WHERE THE LENGTH OF A WALL PIER BETWEEN OPENINGS IS LESS THAN 3X THE NOMINAL THICKNESS, THE LINTEL REINFORCING SHALL BE CONTINUOUS OVER THE WALL PIER.

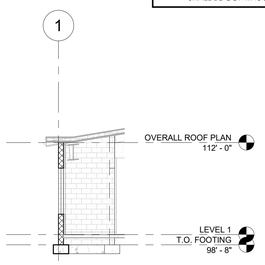

12 WALL ELEV. - EVENT CENTER (LOOKING WEST)

1/8" = 1'-0"

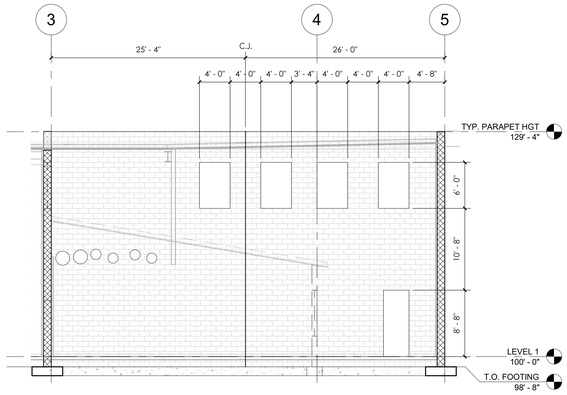

7 WALL ELEV. - TEEN CENTER (LOOKING WEST)

1/8" = 1'-0"

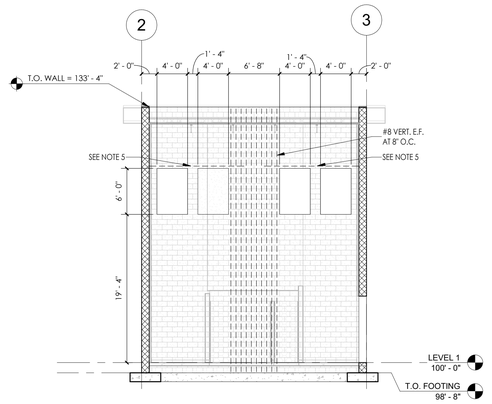

4 WALL ELEVATION - GRID F (LOOKING WEST)

1/8" = 1'-0"

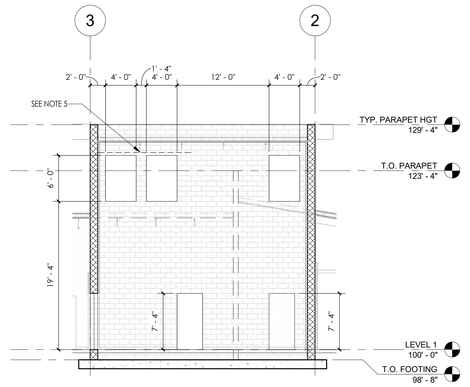

2 WALL ELEVATION - GRID B (LOOKING EAST)

1/8" = 1'-0"

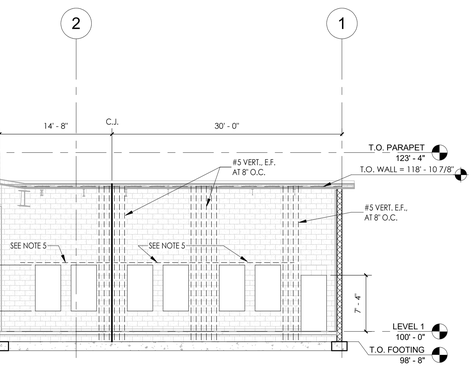

11 WALL ELEVATION - EVENT CENTER (LOOKING EAST)

1/8" = 1'-0"

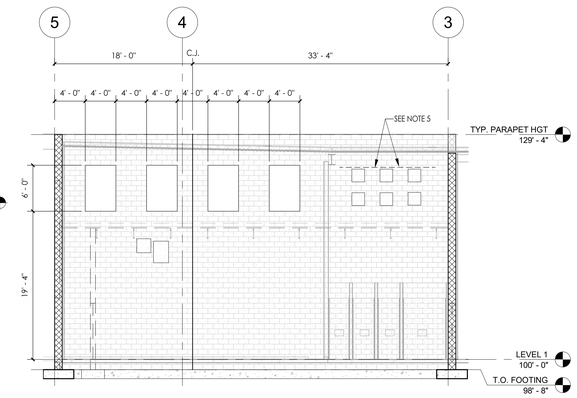

8 WALL ELEV. - TEEN CENTER (LOOKING EAST)

1/8" = 1'-0"

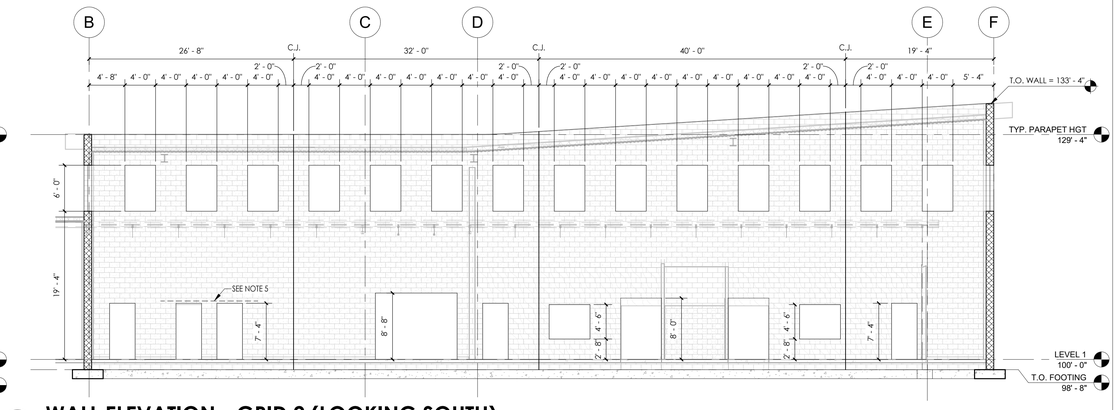

3 WALL ELEVATION - GRID 2 (LOOKING SOUTH)

1/8" = 1'-0"

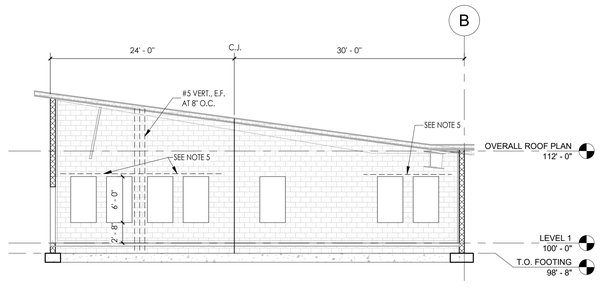

10 WALL ELEV. - EVENT CENTER (LOOKING SOUTH)

1/8" = 1'-0"

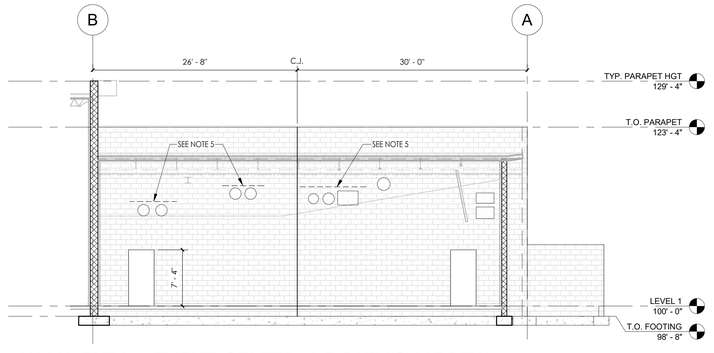

9 WALL ELEV. - EVENT CENTER (LOOKING NORTH)

1/8" = 1'-0"

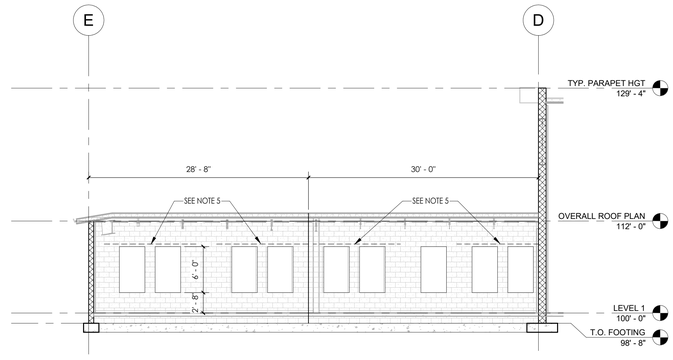

5 WALL ELEVATION - GRID 4 (LOOKING NORTH)

1/8" = 1'-0"

tsk
225 South Arlington Avenue
Reno NV, 89501
phone: 775.857.2949
fax: 775.857.2403
www.tska.com

NOT FOR CONSTRUCTION

THESE DRAWINGS AND SPECIFICATIONS ARE THE PROPERTY OF TATE SNYDER KIMSEY ARCHITECTS AND MAY NOT BE REPRODUCED OR USED FOR ANY PURPOSE WITHOUT THE ARCHITECTS WRITTEN CONSENT. AS INSTRUMENTS OF SERVICE, THESE DOCUMENTS ARE NOT FINAL AND READY FOR USE, AND THEREFORE NOT VALID, UNLESS THEY ARE SEALED, SIGNED AND DATED.

Copyright, Ltd 2022

Consultant

NELSON WILCOX
STRUCTURAL ENGINEERS
225 S Arlington Ave, Ste B, Reno, NV 89501
www.nelson-wilcox.com

PLEASE RECYCLE

Project

CITY OF FERNLEY CRRC

Job No: 21-058.00

Owner

CITY OF FERNLEY

Job No: 20-22

50% CONSTRUCTION DOCUMENTS

REVISIONS		
REV	DATE	DESCRIPTION

Sheet Title

WALL ELEVATIONS - BASE BID

Date: JANUARY 19, 2023

Sheet No:

S5.01

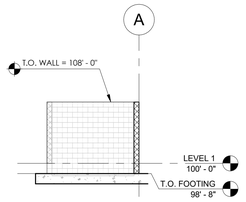

10 WALL ELEV. - TRASH (NORTH)
1/8" = 1'-0"

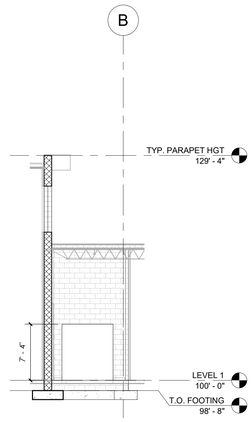

3 WALL ELEV. - KITCHEN ENTRY (NORTH)
1/8" = 1'-0"

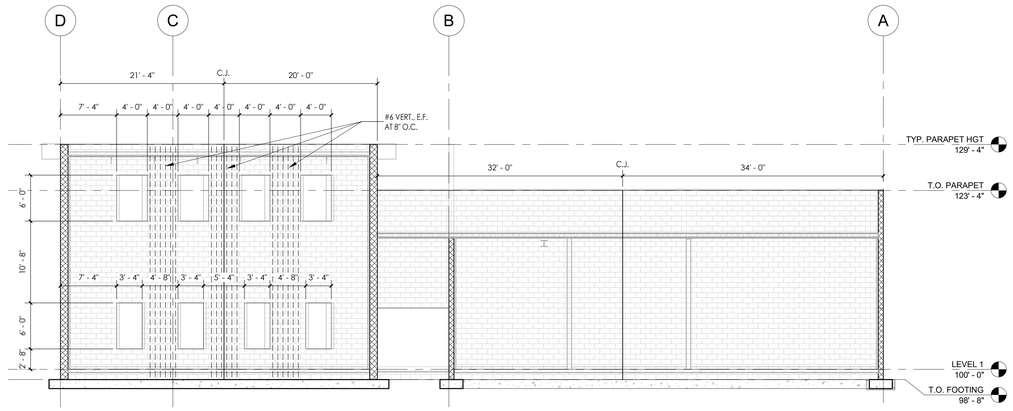

1 WALL ELEVATION - GRID 5 (LOOKING NORTH)
1/8" = 1'-0"

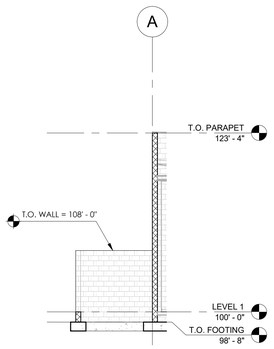

14 WALL ELEV. - ENCLOSURE (SOUTH)
1/8" = 1'-0"

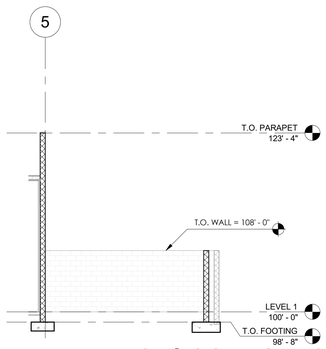

11 WALL ELEV. - TRASH (LOOKING WEST)
1/8" = 1'-0"

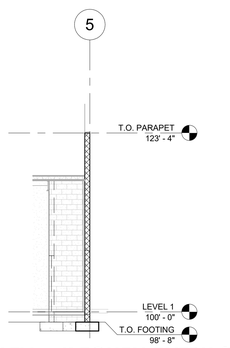

4 WALL ELEV. - KITCHEN ENTRY (WEST)
1/8" = 1'-0"

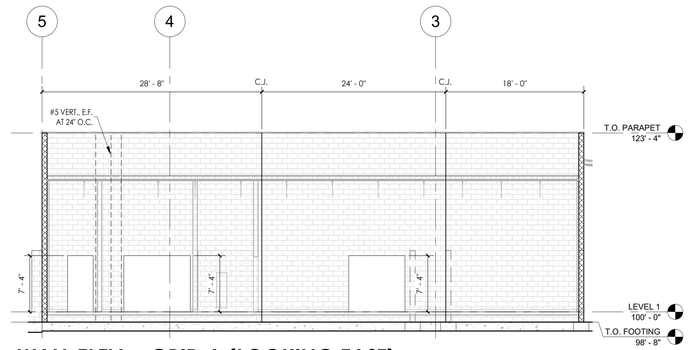

2 WALL ELEV. - GRID A (LOOKING EAST)
1/8" = 1'-0"

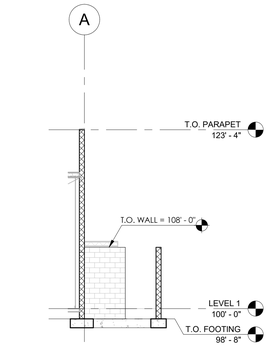

12 WALL ELEV. - ENCLOSURE (NORTH)
1/8" = 1'-0"

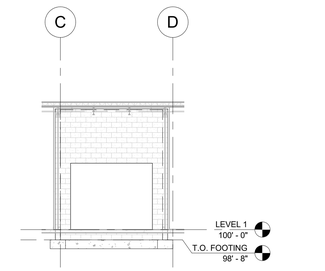

7 WALL ELEV. - ENTRY (LOOKING SOUTH)
1/8" = 1'-0"

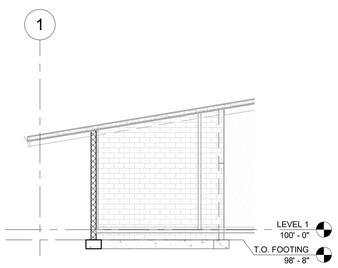

6 WALL ELEV. - ADMIN (WEST)
1/8" = 1'-0"

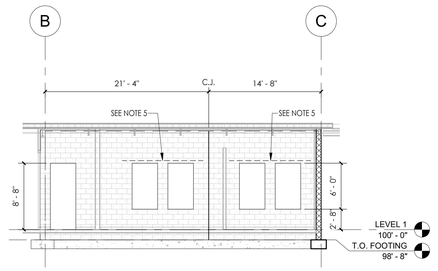

5 WALL ELEV. - ADMIN (SOUTH)
1/8" = 1'-0"

NOTE:

1. WALL OPENINGS LESS THAN 12" IN WIDTH AND/OR HEIGHT NEED NO SPECIAL REINFORCING AND THEREFORE ARE NOT SHOWN FOR CLARITY.
2. COORDINATE ALL MECH./PLUMBING OPENINGS WITH MECH.
3. CONTRACTOR SHALL PROVIDE VERTICAL CONTROL JOINTS (C.J.) IN MASONRY WALLS IN ACCORDANCE WITH DETAIL 5 / S0.3 AT LOCATIONS SHOWN ON ELEVATIONS.
4. ADDITIONAL HORIZONTAL REINFORCEMENT AT CMU PIERS TO EXTEND 32" ABOVE AND BELOW THE ADJACENT WINDOW OPENING(S) AND 32" ABOVE THE ADJACENT DOOR OPENINGS.
5. WHERE THE LENGTH OF A WALL PIER BETWEEN OPENINGS IS LESS THAN 3X THE NOMINAL THICKNESSS, THE LINTEL REINFORCING SHALL BE CONTINUOUS OVER THE WALL PIER.

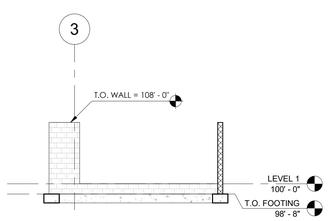

13 WALL ELEV. - ENCLOSURE (EAST)
1/8" = 1'-0"

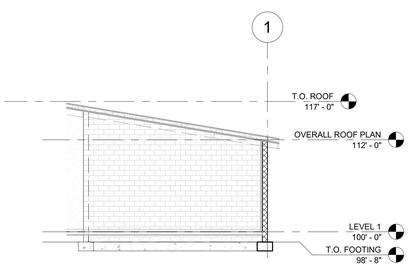

8 WALL ELEV. - SOUTH CLASS (EAST)
1/8" = 1'-0"

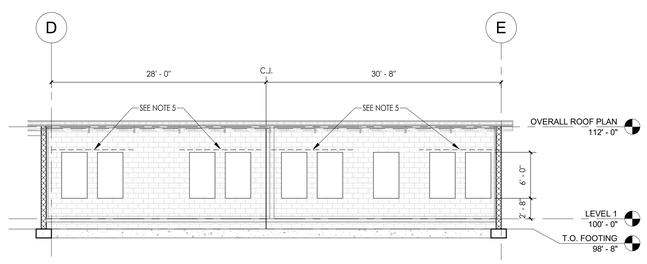

9 WALL ELEV. - SOUTH CLASS (SOUTH)
1/8" = 1'-0"

tsk
225 South Arlington Avenue
Reno NV, 89501
phone: 775.857.2949
fax: 775.857.2403
www.tska.com

NOT FOR CONSTRUCTION

THESE DRAWINGS AND SPECIFICATIONS ARE THE PROPERTY OF TATE SNYDER KIMSEY ARCHITECTS AND MAY NOT BE REPRODUCED OR USED FOR ANY PURPOSE WITHOUT THE ARCHITECTS WRITTEN CONSENT. AS INSTRUMENTS OF SERVICE, THESE DOCUMENTS ARE NOT FINAL AND READY FOR USE, AND THEREFORE NOT VALID, UNLESS THEY ARE SEALED, SIGNED AND DATED.
Copyright, Ltd 2022

Consultant

NELSON WILCOX
STRUCTURAL ENGINEERS
225 S Arlington Ave, Ste B, Reno, NV 89501
www.nelson-wilcox.com

PLEASE RECYCLE

Project
CITY OF FERNLEY CRRC

Job No: 21-058.00

Owner
CITY OF FERNLEY

Job No: 20-22

50% CONSTRUCTION DOCUMENTS

REVISIONS		
REV	DATE	DESCRIPTION

Sheet Title
WALL ELEVATIONS - BASE BID

Date: JANUARY 19, 2023
Sheet No:

S5.02

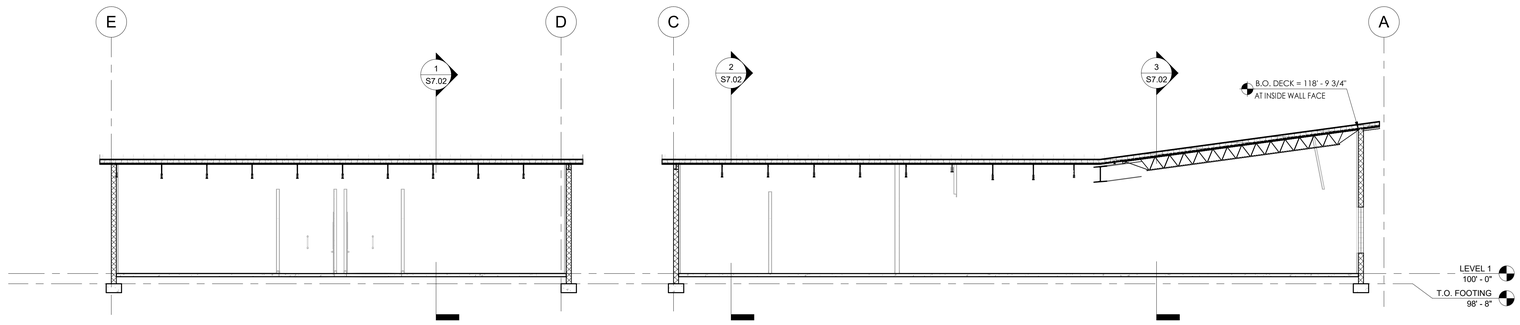

1 BASE BID - STRUCTURAL SECTION 1

1/8" = 1'-0"

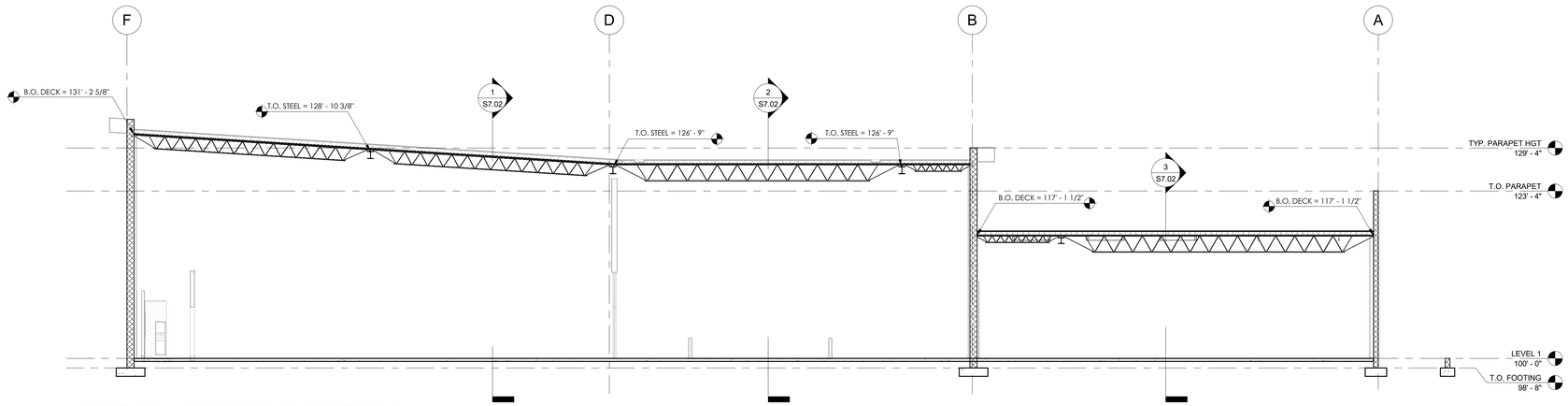

2 BASE BID - STRUCTURAL SECTION 2

1/8" = 1'-0"

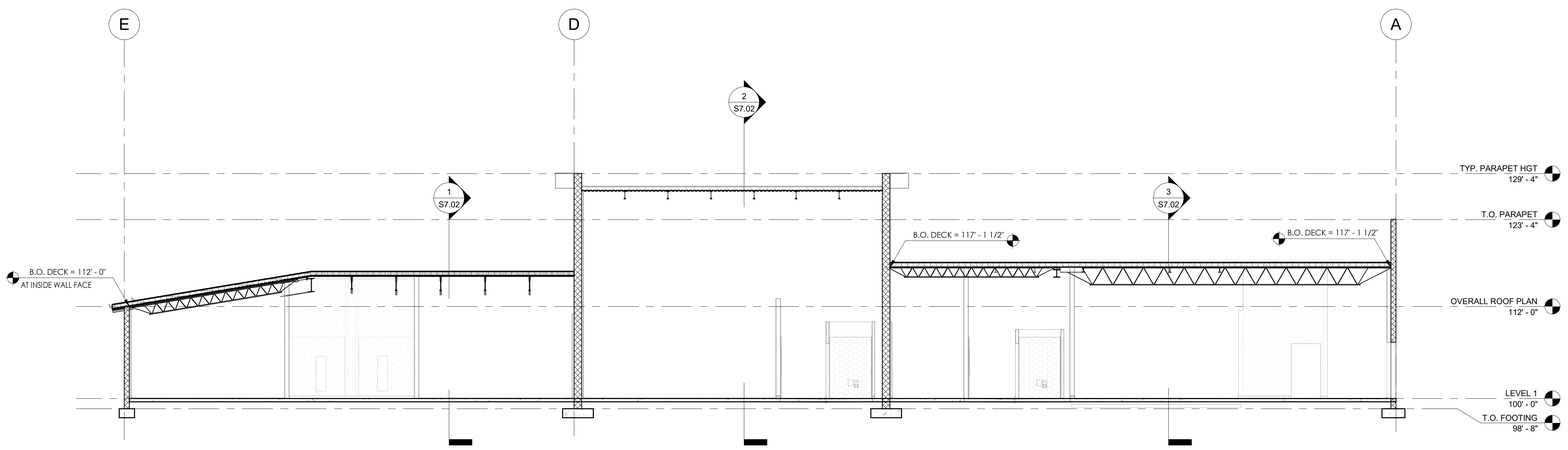

3 BASE BID - STRUCTURAL SECTION 3

1/8" = 1'-0"

GENERAL NOTES

KEYNOTES

LEGEND

KEYPLAN

tsk
225 South Arlington Avenue
Reno NV, 89501
phone: 775.857.2949
fax: 775.857.2403
www.tska.com

NOT FOR CONSTRUCTION

THESE DRAWINGS AND SPECIFICATIONS ARE THE PROPERTY OF TATE SNYDER KIMSEY ARCHITECTS AND MAY NOT BE REPRODUCED OR USED FOR ANY PURPOSE WITHOUT THE ARCHITECTS WRITTEN CONSENT. AS INSTRUMENTS OF SERVICE, THESE DOCUMENTS ARE NOT FINAL AND READY FOR USE, AND THEREFORE NOT VALID, UNLESS THEY ARE SEALED, SIGNED AND DATED.

Copyright, Ltd 2022

Consultant

NELSON WILCOX
STRUCTURAL ENGINEERS
225 S Arlington Ave, Ste B, Reno, NV 89501
www.nelson-wilcox.com

PLEASE RECYCLE

Project
CITY OF FERNLEY CRRC

Job No: 21-058.00

Owner
CITY OF FERNLEY

Job No: 20-22

50% CONSTRUCTION DOCUMENTS

REVISIONS		
REV	DATE	DESCRIPTION

Sheet Title
STRUCTURAL SECTIONS - BASE BID

Date: JANUARY 19, 2023
Sheet No:

S7.01

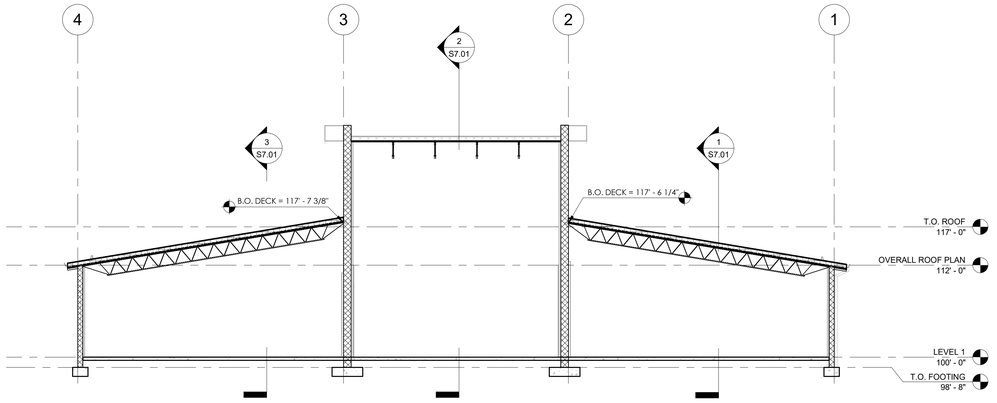

1 BASE BID - STRUCTURAL SECTION 4

1/8" = 1'-0"

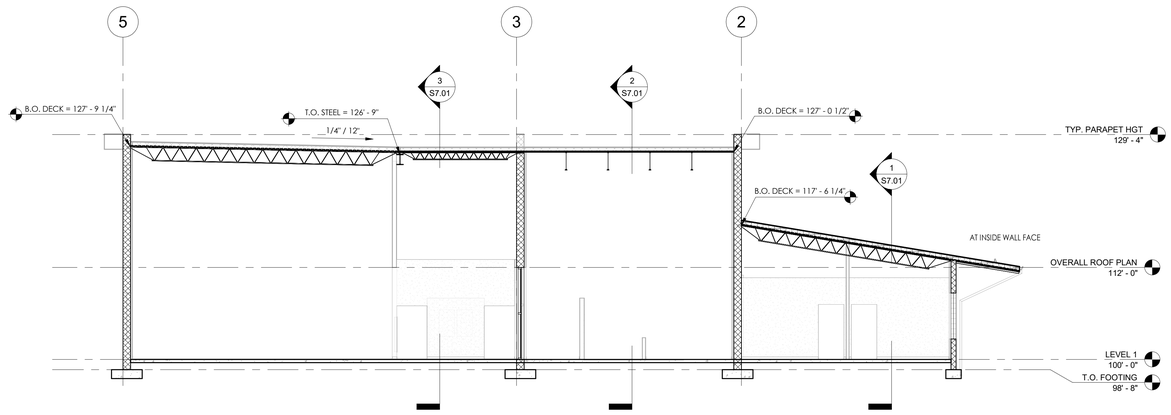

2 BASE BID - STRUCTURAL SECTION 5

1/8" = 1'-0"

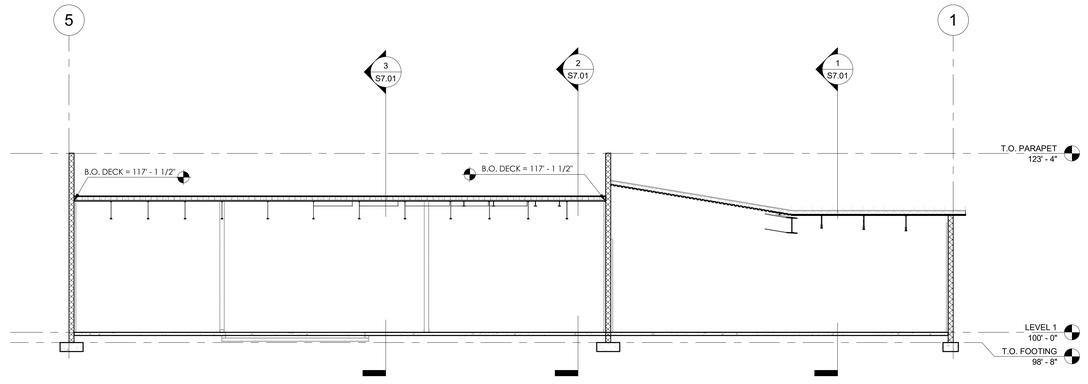

3 BASE BID - STRUCTURAL SECTION 6

1/8" = 1'-0"

GENERAL NOTES

KEYNOTES

LEGEND

KEYPLAN

tsk
225 South Arlington Avenue
Reno NV, 89501
phone: 775.857.2949
fax: 775.857.2403
www.tska.com

NOT FOR CONSTRUCTION

THESE DRAWINGS AND SPECIFICATIONS ARE THE PROPERTY OF TATE SNYDER KIMSEY ARCHITECTS AND MAY NOT BE REPRODUCED OR USED FOR ANY PURPOSE WITHOUT THE ARCHITECTS WRITTEN CONSENT. AS INSTRUMENTS OF SERVICE, THESE DOCUMENTS ARE NOT FINAL AND READY FOR USE, AND THEREFORE NOT VALID, UNLESS THEY ARE SEALED, SIGNED AND DATED.

Copyright, Ltd 2022

Consultant

NELSON WILCOX
STRUCTURAL ENGINEERS
225 S Arlington Ave, Ste B, Reno, NV 89501
www.nelson-wilcox.com

PLEASE RECYCLE

Project
CITY OF FERNLEY CRRC

Job No: 21-058.00

Owner
CITY OF FERNLEY

Job No: 20-22

50% CONSTRUCTION DOCUMENTS

REVISIONS		
REV	DATE	DESCRIPTION

Sheet Title
STRUCTURAL SECTIONS - BASE BID

Date: JANUARY 19, 2023

Sheet No:
S7.02

ABBREVIATIONS

A.C.C.	APPLICABLE CATEGORY CONTRACTOR
A.F.F.	ABOVE FINISHED FLOOR
A.P.	AIR PRESSURE
ACR	AIR CONDITIONING REFRIGERATION
ADA	AMERICAN DISABILITY ACT
ADDT'L	ADDITIONAL
ADJ.	ADJUSTABLE
ALT.	ALTERNATE
ALUM.	ALUMINUM
AMPS.	AMPERES
APPROX.	APPROXIMATE
ARCH.	ARCHITECT
ASS'Y	ASSEMBLY
ATTACH.	ATTACHMENT
B.F.C.	BELOW FINISHED CEILING
B/C	BLOWER COIL
BLDG	BUILDING
BLK	BLOCKING
BPD	BACKFLOW PREVENTION DEVICE
BRKT	BRACKET
BTU	BRITISH THERMAL UNITS PER HOUR
BWP	BUILDING WORKS PLAN
C.O.	CONVENIENCE OUTLET
C.T.	CERAMIC TILE
C/E	CONDENSATE EVAPORATOR
C/L	CENTER LINE
C/T	COUNTER TOP
C/W	COMES WITH
CAB.	CABINET
CANT.	CANTILEVER
CFM	CUBIC FEET PER MINUTE
CLG	CEILING
CLR	CLEAR
CMU	CONCRETE MASONRY UNIT
CO2	CARBON DIOXIDE
COL	COLUMN
COMP'R	COMPRESSOR
COMP'T	COMPARTMENT
CONC	CONCRETE
CONN.	CONNECTION
CONT.	CONTINUOUS
CONTR.	CONTRACTOR
CUST.	CUSTOM
CW	COLD WATER
D.	DIRECT
DM	DISH MACHINE
DBL	DOUBLE
DEPT	DEPARTMENT
DET.	DETAIL
DIA	DIAMETER
DIAG	DIAGONAL
DIM.	DIMENSION
DISP.	DISPENSER
DIV.	DIVISION
DMH	DIELI MURAWKA HOWE
DN	DOWN
DP	DEEP
DPDT	DOUBLE PULL, DOUBLE THROW
DSA	DIVISION OF THE STATE ARCHITECT
DTA	DIAMOND TREAD ALUMINUM
DWG	DRAWING
DWR	DRAWER
E.	EXISTING
E.C.	ELECTRICAL CONTRACTOR
E.F.	EXHAUST FAN
E.G.	FOR EXAMPLE
EMT	ELECTRICAL METALLIC TUBING
E.P.	ELECTRICAL PANEL
EA	EACH
ELEV	ELEVATION
E.M.S.	ENERGY MANAGEMENT SYSTEM
EPH	ENVIRONMENTAL HEALTH PROTECTION
EQ.	EQUAL
EQUIP	EQUIPMENT
ETC	ET CETERA
EVAP	EVAPORATOR
EXH	EXHAUST
EXT	EXTERIOR
F.D.	FLOOR DRAIN
F.J.	FIELD JOINT
F.S.	FLOOR SINK
F.S.E.C.	FOODSERVICE EQUIPMENT CONTRACTOR
F.T.	FLOOR TROUGH
F.T.D.	FAHRENHEIT TEMPERATURE DIFFERENCE
FEWD	FOOD ESTABLISHMENT WASTEWATER DISCHARGE
FIN.	FINISH
FIXT	FIXTURE
FLR	FLOOR
FLUOR	FLUORESCENT
FPM	FOOT POUNDS PER MINUTE
FRP	FIBERGLAS REINFORCED PLASTIC
FRZ	FREEZER
F.S.S.	FIRE SUPPRESSION SYSTEM
FT	FOOT or FEET
G.C.	GENERAL CONTRACTOR
G.M.	GAS METER
GA.	GAUGE
GAL.	GALLON
GALV	GALVANIZED
GPH	GALLONS PER HOUR
GPM	GALLONS PER MINUTE
H&C	HOT AND COLD WATER
H.	HEIGHT
H.I.D.	HIGH INTENSITY DISCHARGE
H.V.A.C.	HEATING/VENTILATING AND AIR CONDITIONING
HACCP	HAZARD ANALYSIS CRITICAL CONTROL POINT
HORIZ	HORIZONTAL
HP	HORSE POWER
HTR	HEATER
HW	HOT WATER
I.D.	INSIDE DIMENSION
I.E.	THEREFORE
I.W.	INDIRECT WASTE
IN.	INCHES
INFO	INFORMATION
INSUL	INSULATION
INT	INTERIOR
IPS	INTERNAL PIPE SIZE
J-BOX	JUNCTION BOX
KW	KILOWATTS
L.	LENGTH
L/P	LAMINATED PLASTIC
LBS	POUNDS
LIN	LINEAR
LOCN	LOCATION
LTS	LIGHTS
MACH	MACHINE
MAT.	MATERIAL
MAX.	MAXIMUM
MECH	MECHANICAL
MFR	MANUFACTURER
MIN	MINIMUM
MISC	MISCELLANEOUS
MTD.	MOUNTED
MUA	MAKE-UP AIR
MULL	MULLION
N.A.	NOT AVAILABLE
NSF	NATIONAL SANITATION FOUNDATION
N.T.S.	NOT TO SCALE
N/A	NOT APPLICABLE
NAT	NATURAL
No.	NUMBER
OB	OPEN BURNER
O.C.	ON CENTER
O.D.	OUTSIDE DIAMETER
OPNG	OPENING
OSHPD	OFFICE STATE HEALTH PLANNING & DEVELOPMENT
OZ	OUNCE
P.B.	PULL BOX
P.C.	PLUMBING CONTRACTOR
PERF.	PERFORATED
PG	PAGE
PH	PHASE
PL	PLATE
PREP	PREPARATION
PREV	PREVIOUS
PSF	POUNDS PER SQUARE FOOT
PSI	POUNDS PER SQUARE INCH
PT	POINT
PVC	POLY VINYL CHLORIDE
Q.D.	QUICK DISCONNECT
Q.T.	QUARRY TILE
QT	QUART
QTY	QUANTITY
RAD	RADIUS
RECOM'D	RECOMMENDED
REFRIG	REFRIGERATOR
REMOV	REMOVABLE
REQD	REQUIRED
RLA	RUNNING LOAD AMPS
RM	ROOM
RND	ROUND
RPPD	REDUCED PRESSURE PRINCIPLE DEVICE
S.O.V.	SHUT-OFF VALVE
SP	STATIC PRESSURE
S/C	SELF CONTAINED
S/S	STAINLESS STEEL
SCHED	SCHEDULE
SECT	SECTION
SHS	SINGLE HORIZONTAL SLIDE
SHT	SHEET
SIM	SIMILAR
SL/SF	SOLID SURFACE
SMACNA	SHEET METAL AIR CONDITIONING NAT. ASSOC.
SNZ GD	SNEEZE GUARD
SPEC	SPECIFICATIONS
SQ FT	SQUARE FEET
STMR	STEAMER
SW	SWITCH
SYM	SYMBOL
SYS	SYSTEM
T.B.D.	TO BE DETERMINED
T.C.	TRASH CAN
TEL CO	TELEPHONE COMPANY
TEMP.	TEMPERATURE
TYP	TYPICAL
UBC	UNIFORM BUILDING CODE
UDS	UTILITY DISTRIBUTION SYSTEM
UL	UNDERWRITERS LABORATORY
UMC	UNIFORM MECHANICAL CODE
UPC	UNIFORM PLUMBING CODE
UV	ULTRA VIOLET
U/C	UNDER COUNTER
VCT	VINYL COMPOSITION TILE
VS	VERSUS
VFD	VARIABLE FREQUENCY DRIVE
W.	WIDTH
W.G.	WATER GAUGE
W.H.	WATER HEATER
W.I.	WALK IN
W.I.C.	WIDTH IN CLEAR
W/	WITH
WGT	WEIGHT
W.P.	WATER PRESSURE
X-BRC	CROSS-BRACING

ATTACHMENT NOTES

(MIN. REQUIREMENTS UNLESS NOTED OTHERWISE)

GENERAL REQUIREMENTS:

THESE GUIDELINES HAVE BEEN PREPARED FOR USE BY ENGINEERS, ARCHITECTS AND CONTRACTORS, APPROVING AUTHORITIES, AND OTHERS AS AN AID IN STANDARDIZING DETAILS OF CONSTRUCTION FOR SEISMIC RESTRAINTS OF FOOD SERVICE EQUIPMENT COMPLYING WITH THE 2019 UNIFORM BUILDING CODE (UBC) AS MODIFIED BY THE NEVADA BUILDING CODE. IT IS NOT TO BE CONSTRUED TO BE A DESIGN GUIDELINE. THE APPLICATIONS OF THE DETAILS CONTAINED HEREIN TO A SPECIFIC PROJECT ARE THE RESPONSIBILITY OF THE DESIGN PROFESSIONAL. NEVADA OFFICE OF STATEWIDE HEALTH PLANNING AND DEVELOPMENT (NOSHPD) APPROVAL IS FOR ANCHORAGE ONLY. CONSTRUCTION OF EQUIPMENT MUST BE STRONG ENOUGH TO RESIST DESIGN FORCES.

THESE GUIDELINES WERE DEVELOPED USING SOUND ENGINEERING PRINCIPLES AND JUDGMENT. THEY REPRESENT REALISTIC AND SAFE DETAILS COMPATIBLE WITH GENERAL GUIDELINES AND FORCE FACTORS IN THE IBC 2019 AS MODIFIED BY NEVADA BUILDING CODE. THEY ARE SUBJECT TO REVISION AS FURTHER EXPERIENCE AND INVESTIGATION MAY SHOW IF NECESSARY. SMACNA ASSUMES NO RESPONSIBILITY AND ACCEPTS NO LIABILITY FOR THE APPLICATION OF THE PRINCIPLES OR TECHNIQUES CONTAINED IN THIS GUIDELINE.

GENERAL NOTES:

1. – KITCHEN EQUIPMENT IS MANUFACTURED IN A MULTITUDE OF DIFFERENT SHAPES, SIZES, AND WEIGHTS. IN ORDER TO CODIFY THE VARIABLES, EQUIPMENT HAS BEEN ARRANGED INTO BASIC CATEGORIES OR TYPES; ALL EQUIPMENT WITHIN A CATEGORY HAS SIMILAR RESTRAINT REQUIREMENTS. DETAILS OF ANCHORAGES AND BRACING FOR EACH OF THE BASIC TYPES HAVE BEEN DEVELOPED. THE EQUIPMENT SHOWN IN THE INDEX IS NOT NECESSARILY A COMPLETE LIST, BUT THE LISTED EQUIPMENT DETAILS MAY BE USED AS A GUIDE FOR SIMILAR SIMILAR EQUIPMENT WITHIN THE RESTRAINTS INDICATED. THE PROJECT ARCHITECT/ENGINEER SHOULD BE CONSULTED IF THERE IS ANY DOUBT ABOUT RESTRAINT REQUIREMENTS, SO THAT ALLOWANCES FOR BRACING SYSTEMS MAY BE INCLUDED IN THE CONTRACT DOCUMENTS OR CONTRACTOR'S BID.
2. – ALL DETAILS IN THIS GUIDELINE ARE FOR EQUIPMENT THAT IS DIRECTLY CONNECTED TO UTILITIES. PLUG-IN TYPES ARE USUALLY EXCLUDED. THE EXCEPTION IS FREESTANDING CABINETS GREATER THAN FIVE FEET IN HEIGHT. THE DETAILS IN THE GUIDELINE SHOW AN ENTIRE ASSEMBLY.
3. – THE DETAILS HAVE BEEN PREPARED ON THE BASIS OF NEW CONSTRUCTION. THE SAME DETAILS ARE APPLICABLE TO REMODELING, PROVIDED THE SPECIFIED STRUCTURAL CAPACITIES OF THE EXISTING STRUCTURES, SUCH AS STUD WALLS, FLOORS, ETC., ARE EQUIVALENT SUBSTANTIATED.
4. – FINISHES INDICATED ON THE DETAILS ARE NOT INCLUDED IN THE KITCHEN EQUIPMENT CONTRACT.
5. – THE FOOD SERVICE EQUIPMENT CONTRACTOR SHALL PROVIDE LOCATION DRAWINGS FOR ALL EMBEDDED ITEMS AND WALL PLATES. THE GENERAL CONTRACTOR SHALL COORDINATE THE WORK OF OTHER TRADES AS THEY RELATE TO THE INSTALLATION OF KITCHEN EQUIPMENT.
6. – BACKING PLATES ON WALLS SHALL BE INSTALLED TO ENSURE A FLAT FINISHED WELL.
7. – CONCRETE ANCHORS WILL HAVE LOCAL-GOVERNING-JURISDICTION-APPROVED VALUES EQUAL TO OR GREATER THAN BOTH THE SHEAR AND TENSION CAPACITIES LISTED ON A-34/FS1.09.1. CAST-IN-PLACE BOLTS, INSERTS, EXPANSION ANCHORS, OR HEAT-TREATED CONCRETE SCREWS MAY BE USED WHERE THE APPROVED LOADS ARE EQUAL TO OR GREATER THAN THE VALUES FOR THE SPECIFIED CONCRETE ANCHOR. THE DESIGNER SHOULD USE CAUTION WHEN USING THE SHALLOWEST ANCHOR IN THE APPROVED REPORTS BECAUSE IT MAY NOT PERFORM SATISFACTORILY WHEN SUBJECTED TO SEISMIC LOADS. SATISFACTORILY WHEN SUBJECTED TO SEISMIC LOADS.
8. – ALL SCREWS INTO METAL FRAMING SHALL PENETRATE A MINIMUM OF 1/4" (6.4 MM) OR 3 PITCHED OF THREAD. ALL SCREWS INTO WOOD FRAMING SHALL PENETRATE A MINIMUM OF 1" (25.4 MM) UNLESS NOTED OTHERWISE.

BUILDING CONSTRUCTION NOTES

1. – REFER TO THE ARCHITECTS DRAWINGS AND SPECIFICATIONS FOR CURRENT BUILDING CODES

ELECTRICAL NOTES

1. – REFER TO THE ELECTRICAL ENGINEER'S DRAWINGS AND SPECIFICATIONS FOR CURRENT ELECTRICAL CODES AND ELECTRICAL NOTES

MECHANICAL / VENTILATING NOTES

1. – REFER TO THE MECHANICAL ENGINEER'S DRAWINGS AND SPECIFICATIONS FOR CURRENT MECHANICAL CODES AND MECHANICAL NOTES

PLUMBING NOTES

1. – REFER TO THE PLUMBING ENGINEER'S DRAWINGS AND SPECIFICATIONS FOR CURRENT PLUMBING CODES AND PLUMBING NOTES

REFRIGERATION NOTES

(MIN. REQUIREMENTS UNLESS NOTED OTHERWISE)

1. – ANY DISCREPANCIES BETWEEN PLANS AND CODE REQUIREMENTS THAT MAY AFFECT THE INSTALLATION, FABRICATION, OR INSTALLATION, FABRICATION, OR OVERALL WORK IN ANY WAY SHALL BE BROUGHT TO THE ATTENTION OF THE FOOD SERVICE EQUIPMENT CONTRACTOR IMMEDIATELY BY THE REFRIGERATION CONTRACTOR, BEFORE START OF CONSTRUCTION.
2. – FOOD FACILITY REQUIREMENT NOTES AND ALL OTHER NOTES ARE TO BE CONSIDERED APART OF THESE NOTES. REFRIGERATION CONTRACTOR TO PROVIDE AS THEY APPLY.
3. – CONTRACTOR SHALL BE RESPONSIBLE THAT HIS PHASE OF WORK MEETS AND IS INSTALLED IN ACCORDANCE WITH STANDARDS REQUIRED BY ALL GENERAL, STATE, FEDERAL, AND ALL CODES PECULIAR TO MUNICIPALITY OR AREA WHERE JOB IS BEING INSTALLED INCLUDING DEPARTMENT OF HEALTH SERVICES REQUIREMENTS.
4. – CONTRACTOR TO VERIFY ALL SERVICES, SIZES, AND LOCATIONS REQUIRED FOR REFRIGERATION EQUIPMENT. PROVIDE AND INSTALL ALL COMPRESSORS, REMOTE ICE MACHINE CONDENSING UNITS, REFRIGERANT PIPING, VALVES, FITTINGS, GAUGES, INSULATION, ETC., ALL AS REQUIRED. FOR A COMPLETE WORKING SYSTEM, UNLESS NOTED OTHERWISE.
5. – CONTRACTOR SHALL SEAL ALL REFRIGERATION PENETRATIONS THROUGH WALLS, FLOORS, AND CEILINGS. WATERTIGHT AND VERMIN-PROOF.
6. – ELECTRICAL SERVICE, CONTROL WIRING, AND CONNECTIONS TO BE PROVIDED AND INSTALLED BY THE ELECTRICAL CONTRACTOR.
7. – REFRIGERATION COMPRESSOR(S) AND REMOTE ICE MACHINE CONDENSING UNIT(S) ARE TO BE LOCATED A MINIMUM OF TEN (10) FEET FROM COOKING EXHAUST FANS.
8. – REFRIGERATION COMPRESSOR(S) SHALL BE AIR COOLED, SEMI-HERMETIC TYPE WHERE POSSIBLE. BLOWER COILS SHALL BE VINYL DIPPED TYPE.
9. – CONTRACTOR TO PROVIDE & INSTALL INSULATED REFRIGERATION LINES IN WALLS AND/OR CEILINGS BEFORE THEY ARE CLOSED, AND FINISH SURFACE IS APPLIED.
10. – CONTRACTOR TO PROVIDE AND INSTALL SUPPORTS (TRAPEZE STYLE) FOR ALL OVERHEAD REFRIGERATION LINE RUNS.

FOOD SERVICE SHEET LIST

FS0.0.0 FOODSERVICE EQUIPMENT GENERAL NOTES
FS0.1.0 FOODSERVICE EQUIPMENT FLOOR PLAN: BASE BID & BID ALT "A"
FS0.2.0 FOODSERVICE EQUIPMENT SCHEDULE
FS0.3.0 FOODSERVICE EQUIPMENT PLUMBING PLAN
FS0.4.0 FOODSERVICE EQUIPMENT ELECTRICAL PLAN
FS0.5.0 FOODSERVICE EQUIPMENT BUILDING WORK PLAN (*)
FS0.6.0 FOODSERVICE EQUIPMENT REFRIGERATION PLAN
FS0.6.1 FOODSERVICE EQUIPMENT REFRIGERATION DETAILS
FS0.7.0 FOODSERVICE EQUIPMENT ELEVATIONS
FS0.7.A FOODSERVICE EQUIPMENT 3D VIEWS
FS0.8.0 FOODSERVICE EQUIPMENT DETAILS
FS0.8.1 FOODSERVICE EQUIPMENT DETAILS
FS0.9.0 FOODSERVICE EQUIPMENT ATTACHMENT DETAILS
FS0.9.1 FOODSERVICE EQUIPMENT ATTACHMENT DETAILS
FS0.10.0 FOODSERVICE EQUIPMENT EXHAUST HOOD
FS0.10.1 FOODSERVICE EQUIPMENT EXHAUST HOODS

(*) NOTE: THE FOLLOWING INFORMATION CAN BE FOUND ON THE BUILDING WORK PLAN: FLOOR DEPRESSIONS, LEVEL FLOORS; GALV. CURBS; WALL BACKING; HOOD OUTLINES, EXHAUST & MUA DUCTS; WALL & CEILING PENETRATIONS; WALL & WINDOW OPENINGS; FRP LOCATIONS, CERAMIC TILE & S/S WALL FINISHES

FOOD FACILITY REQUIREMENTS NOTES

(MIN. REQUIREMENTS UNLESS NOTED OTHERWISE)

1. – A CONCRETE SLAB IS PROVIDED FOR TRASH, GARBAGE, AND GREASE CONTAINER. IF WALLS ENCLOSE AREA, THE INTERIOR WALL SURFACES WILL BE SMOOTH, SEALED AND WASHABLE (E.G., PLASTERED SMOOTH AND PAINTED, ETC.)
2. – **ALL FOOD-RELATED AND UTENSIL-RELATED EQUIPMENT SHALL MEET OR BE EQUIVALENT TO SANITATION STANDARDS ESTABLISHED BY AN AMERICAN NATIONAL STANDARDS INSTITUTE (ANSI) ACCREDITED PROGRAM.**
3. – ALL FLOOR MOUNTED EQUIPMENT WILL BE INSTALLED ON MINIMUM 6" SANITARY LEGS, CASTORS, OR COMPLETELY SEALED IN POSITIONED ON A 4-INCH HIGH CURB WITH CONTINUOUSLY COVED BASE. COUNTER TOP EQUIPMENT WILL BE ON 4-INCH SANITARY LEGS OR SEALED TO THE COUNTER UNLESS READILY MOBILE.
4. – NOT USED
5. – ANY OPENABLE WINDOWS, VENT OPENINGS OR OTHER SIMILAR OPENINGS MUST BE PROVIDED WITH TIGHT FITTING SCREENS OF MINIMUM 16-MESH TO THE INCH. WINDOWS TO BE FIXED AT FOOD PREP, UNTENSIL-WASHING, OPEN FOOD AND UTENSIL STORAGE AREAS.
6. – ALL EXTERIOR DOORS OPEN OUTWARD AND ARE SELF-CLOSING AND TIGHT FITTING.
7. – BI-FOLD, FRENCH, ACCORDION STYLE AND ROLL-UP DOORS CANNOT OPEN INTO THE FOOD PREP, UTENSIL WASHING OR UNPACKAGED FOOD SERVICE AREAS.
8. – TOILET ROOM DOORS AND DRESSING ROOM DOORS MUST BE SELF-CLOSING AND TIGHT FITTING.
9. – DELIVERY DOORS TO HAVE AIR CURTAIN FANS THAT SPAN THE WIDTH OVER THE DOOR. THE FAN MUST ACTIVATE VIA A MICROSWITCH PROVIDING A MINIMUM VELOCITY OF 1600 FPM MEASURED 3-FEET ABOVE THE GROUND.
10. – A MINIMUM OF 10 FOOT-CANDLES OF LIGHT MEASURED 30-INCHES OFF FLOOR IS PROVIDED IN WALK-IN REFRIGERATED STORAGE AND DRY STORAGE ROOMS AND AT LEAST 20-FOOT CANDLES IS PROVIDED WHERE FOOD IS PROVIDED FOR CONSUMER SELF-SERVICE, WHERE FRESH PRODUCE OR PREPACKAGED FOODS ARE SOLD OR OFFERED FOR CONSUMPTION; INSIDE EQUIPMENT SUCH AS REACH-IN AND UNDER-COUNTER REFRIGERATORS; IN AREAS USED FOR HANDWASHING, WAREWASHING, EQUIPMENT AND UTENSIL STORAGE, AND IN TOILET ROOMS.
11. – A MINIMUM OF 50 FOOT-CANDLES OF LIGHT MEASURED 30-INCHES OFF FLOOR IS PROVIDED WHEN WORKING WITH FOOD OR WORKING WITH UTENSILS OR EQUIPMENT SUCH AS KNIVES, SLICERS, GRINDERS, OR SAWS WHERE EMPLOYEE SAFETY IS A FACTOR AND IN ALL AREAS DURING PERIODS OF CLEANING.
12. – SHATTERSHEILDS FOR ALL LIGHTS ABOVE FOOD PREPARATION, WORK, AND STORAGE WILL BE PROVIDED.
13. – ALL WAREWASHING SINKS TO HAVE THREE COMPARTMENTS THAT ARE A MINIMUM SIZE OF AT LEAST 18"x18"x12" DEEP (OR 16"x20"x12" DEEP) WITH A MINIMUM 18-INCH DRAINBOARD AT EACH END. IF AGAINST A WALL, IT MUST HAVE AN 8-INCH INTEGRAL BACKSPLASH. HOWEVER, IT MUST BE CAPABLE TO ACCOMMODATE THE LARGEST UTENSIL TO BE WASHED. A WAREWASHING MACHINE DOES NOT SUBSTITUTE FOR THE SINK REQUIREMENT.
14. – SINKS TO HAVE SPOUT(S) CAPABLE OF REACHING EACH COMPARTMENT.
15. – FOOD PREP SINK COMPARTMENT(S) TO BE AT LEAST 18"x18"x12" DEEP (OR 16"x20"x12" DEEP) WITH A MINIMUM 18-INCH DRAINBOARD. SEPARATE FOOD PREP SINKS TO BE PROVIDED FOR MEATS AND PRODUCE.
16. – THE THREE OR FOUR COMPARTMENT BAR SINK TO BE AT LEAST 12"x12"x10" DEEP (OR 10"x14"x10" DEEP) WITH A MINIMUM 18-INCH DRAINBOARD AT EACH END.
17. – A SEPARATE WET WASTE DUMP FIXTURE SHALL BE PROVIDED FOR DISPOSAL OF DRINK, WASTE ICE OR COFFEE WASTE.
18. – EACH HANDWASHING SINK MUST HAVE PERMANENTLY MOUNTED SINGLE-SERVICE SOAP & PAPER TOWEL DISPENSERS.
19. – THE HOT WATER HEATER WILL BE A COMMERCIAL TYPE CAPABLE OF CONSTANTLY SUPPLYING HOT WATER AT A TEMPERATURE OF 120°F TO ALL SINKS. IN SIZING THE WATER HEATER, THE PEAK HOURLY DEMAND FOR ALL SINKS, ETC., ARE ADDED TOGETHER TO DETERMINE THE MINIMUM REQUIRED RECOVERY RATE.
20. – ALL LAVATORIES OR HAND SINKS WILL HAVE A COMBINATION FAUCET OR PREMIXING FAUCET CAPABLE OF SUPPLYING WATER TEMPERED TO 100°F. SELF-CLOSING OR METERED FAUCET TO PROVIDE AT LEAST 15-SECONDS OF WATER WITHOUT REACTIVATION.
21. – ALL PLUMBING, ELECTRICAL AND GAS LINES SHALL BE CONCEALED WITHIN THE BUILDING STRUCTURE TO AS GREAT EXTENT AS POSSIBLE. ALL EXPOSED CONDUITS, PLUMBING, ETC. SHALL BE INSTALLED AT LEAST 6-INCHES OFF FLOOR AND 3/4" FROM WALLS USING STANDOFF BRACKETS.
22. – CONDUIT, PLUMBING OR PIPING CANNOT BE INSTALLED ACROSS THE AISLE WAY, TRAFFIC AREA OR DOOR OPENING.
23. – MULTIPLE RUNS OR CLUSTERS OF CONDUIT OR PIPELINES SHALL BE FURRED IN OR ENCASED IN AN APPROVED SEALED ENCLOSURE.
24. – ALL LIQUID WASTE SHALL BE DRAINED BY MEANS OF INDIRECT WASTE PIPES INTO A FLOOR SINK. FLOOR SINKS ARE TO BE INSTALLED FLUSH WITH THE FINISH FLOOR SURFACE AND HAVE SUITABLE EASILY REMOVABLE SAFETY COVER GRATES.
25. – FLOOR SINK TO BE 50% EXPOSED WHEN NO ACCESS IS PROVIDED FOR CLEANING OR BE IN LINE WITH THE FRONT FACE OF ELEVATED FREESTANDING EQUIPMENT.
26. – APPROVED BACKFLOW PREVENTION DEVICES SHALL BE PROPERLY INSTALLED UPSTREAM OF ANY POTENTIAL HAZARD BETWEEN THE POTABLE WATER SUPPLY AND THE SOURCE OF CONTAMINATION. HOSES SHALL NOT BE ATTACHED TO A FAUCET OR HOSE BIBB UNLESS AN APPROVED BACKFLOW PREVENTER IS PROVIDED.
27. – WATER SUPPLY TO CARBONATORS SHALL BE PROTECTED BY AN APPROVED REDUCED PRESSURE PRINCIPLE BACKFLOW PREVENTER. THE RELIEF VALVE SHALL DRAIN INDIRECTLY TO SEWER WITH A LEGAL AIR GAP.
28. – FOR CLEANING FLOOR MATS, THE JANITORIAL SINK TO BE A MINIMUM 24" BY 36" FLOOR-MOUNTED TYPE. MOPS SHALL BE PLACED IN A POSITION THAT ALLOWS THEM TO AIR-DRY WITHOUT SOILING WALLS, EQUIPMENT, OR SUPPLIES.
29. – THE JANITORIAL SINK FAUCET WILL HAVE A THREADED OUTER LIP FOR HOSE ATTACHMENT AND AN APPROVED BACKFLOW PREVENTION DEVICE. NO CHEMICAL DISPENSING SYSTEMS OR SHUT-OFF VALVES TO BE ATTACHED TO MOP SINK FAUCET OUTLET (UNLESS A "SIDEKICK" PLUMBING DEVICE IS INSTALLED).
30. – NO CONDENSATE OR WASTEWATER INCLUDING HVAC WILL DRAIN INTO THE JANITORIAL SINK.
31. – GREASE TRAP TO BE LOCATED OUTSIDE THE FOODSERVICE ACTIVITY AREA, FLUSH WITH THE FINISH FLOOR WHEN INDOORS. LOCAL WASTEWATER DISTRICT OR BUILDING DEPARTMENT TO BE CONTACTED FOR GREASE REMOVAL REQUIREMENTS.
32. – FLOOR DRAINS SHALL BE INSTALLED IN FLOORS THAT ARE WATER-FLUSHED FOR CLEANING AND IN AREAS WHERE PRESSURE SPRAY METHODS FOR CLEANING EQUIPMENT ARE USED, IN RESTROOMS, JANITORIAL ROOMS, SCULLERIES, AND AT BARS WITH WAREWASHING. FLOOR SURFACE IN AREAS PURSUANT TO THIS SHALL BE SLOPED 1:50 TO THE FLOOR DRAINS.
33. – ADEQUATE VENTILATION IS TO BE PROVIDED TO ALL TOILET ROOMS, JANITOR CLOSET WITH MOP SINKS, AND INDOOR TRASH ROOMS AND IN DRESSING/CHANGE ROOM(S).
34. – THE FLOOR FINISH WILL HAVE A SMOOTH SURFACE UNDER ALL EQUIPMENT AND THE WALKWAYS WILL HAVE A LIGHT TEXTURE ONLY.
35. – THE PAINT USED ON WALLS AND CEILINGS OF ALL KITCHEN, FOOD PREP, WORK, STORAGE AREAS WILL BE A GLOSS OR SEMI-GLOSS ENAMEL. FINISH MATERIAL SHALL BE A LIGHT COLOR IN FOOD PREP AREAS FOR EASY CLEANING.
36. – PRIOR TO INSTALLATION, SAMPLES OF FINISHES TO BE SUBMITTED TO ENVIRONMENTAL HEALTH FOR APPROVAL AS NEEDED.
37. – COLD STORAGE ROOMS SHALL BE PROVIDED WITH A SECTION OF SHELVING INSTALLED TO HOLD SHALLOW COOL DOWN PANS – NOT TO EXCEED 4-INCHES IN HEIGHT. SPACE BETWEEN SHELVING TO BE AT LEAST 8-INCHES HIGH.
38. – BACKUP DRY STORAGE SHELVING SHALL BE A MINIMUM OF 96 LINEAR FEET (MEASURED WITH TIERS) OR 25% OF KITCHEN, FOOD PREP, AND WORK AREAS, WHICHEVER IS GREATER. SHELVING SHALL BE AT LEAST 18-INCHES DEEP AND START A MINIMUM SIX-INCHES OFF THE FLOOR SURFACE.
39. – SHELVING OVER WET AREAS (SINKS, MOP SINKS, ETC.) AND FOOD SURFACES WILL BE METAL.
40. – ALL SEAMS, GAPS, OPENINGS TO BE PROPERLY SEALED.

PROJECT INFORMATION:

1. – PROJECT INFOCITY OF FERNLEY COMMUNITY CENTER – 595 SILVER LACE BLVD, FERNLEY, NV 89408
2. – NAME AND PHONE NUMBER OF THE ARCHITECT IS: TSK – (702) 456-3000
3. – TYPE OF THIS FOOD FACILITY IS: 100% SINGLE SERVICE
4. – NUMBER OF EMPLOYEES PER SHIFT (INCLUDING OWNERS & MANAGERS): 4-5
5. – THIS FOOD FACILITY IS SERVED BY THE MUNICIPAL WATER DISTRICT OF THE CITY OF FERNLEY, NV.
6. – THIS FOOD FACILITY IS SERVED BY THE MUNICIPAL SEWER DISTRICT OF THE CITY OF FERNLEY, NV.
7. – SQUARE FOOTAGE OF THIS FOOD FACILITY IS: APPROXIMATELY 2375 1SQ. FT. BASE BID + 170 1SQ. FT. BID ALT "A"

tsk
225 South Arlington Avenue
Reno NV, 89501
phone: 775.857.2949
fax: 775.857.2403
www.tska.com

THESE DRAWINGS AND SPECIFICATIONS ARE THE PROPERTY OF TATE SNYDER KIMSEY ARCHITECTS AND MAY NOT BE REPRODUCED OR USED FOR ANY PURPOSE WITHOUT THE ARCHITECTS WRITTEN CONSENT. AS INSTRUMENTS OF SERVICE, THESE DOCUMENTS ARE NOT FINAL AND READY FOR USE, AND THEREFORE NOT VALID, UNLESS THEY ARE SEALED, SIGNED AND DATED.

Copyright, Ltd 2022

Consultant

DIELI MURAWKA HOWE
A Division of WEBB FOODSERVICE DESIGN
Food Service Design Consultants
3020 Sungold Drive
Las Vegas, NV 89134
Phone: 619.602.4107
Design By:
RICHARD DIELI

PLEASE RECYCLE

Project

CITY OF FERNLEY CRRC

Job No: 21-058.00

Owner

CITY OF FERNLEY

50% CONSTRUCTION DOCUMENTS

REVISIONS		
REV	DATE	DESCRIPTION

Sheet Title

FOODSERVICE EQUIPMENT GENERAL NOTES

Date: MARCH 21, 2023

Sheet No:

FS0.0.0

FLOOR PLAN LEGEND

- BUILDING WALLS (SEE ARCH DWGs)
- (123) ITEM NUMBER (SEE EQUIPMENT SCHEDULE)
- KITCHEN ROOM/ AREA NAME AND ROOM NUMBER
- ACCESSIBLE CLEARANCES AND SYMBOL
- (123) (E) EXISTING FOODSERVICE EQUIPMENT
- (123) OWNER PROVIDED EQUIPMENT
- (C) COLUMN GRIDS WITH COLUMN INDICATORS
- R, F, H EQUIPMENT LABELS (Refrigerator, Freezer, Heated)
- OUTLINE OF FOOD SERVICE EQUIPMENT
- 2442, 1848 STORAGE SHELVING SIZES (Width x Length)
- FOOD SERVICE EQUIPMENT BELOW EQUIPMENT TOP
- (34) (F) FUTURE FOOD SERVICE EQUIPMENT
- FOOD SERVICE EQUIPMENT ABOVE EQUIPMENT TOP
- E.P. (ELECTRICAL PANEL, SEE ELECT ENG DWGs)
- MOBILE FOOD SERVICE EQUIPMENT
- F.E.C. (TYPE "K" FIRE EXTINGUISHER & CABINET)
- FS0.1.0 SHEET NUMBER
- W.H. WATER HEATER (SEE PLUMBING ENG DWGs)
- WALK-IN COOLER/FREEZER INSULATED WALLS
- FS0.7.0 1 2 ELEVATION INDICATOR SYMBOL

KITCHEN FINISH SCHEDULE

ROOM/AREA	FLOOR	BASE	WALLS	CEILING
INTERIOR WALK-IN COOLERS	EPOXY FLOOR NOTE #5	6" H. EPOXY WITH 3/8" RADIUS COVED	22 GA. S/S STAINLESS STEEL	WHITE STUCCO EMBOSSED ALUMINUM
ALL OTHERS ROOMS/AREAS	SEE SHEET A2.00 FOR FINISHES			

NOTE #5: ALL FLOORS WILL HAVE A SMOOTH SURFACE UNDER ALL EQUIPMENT, AND ALL WALKWAYS WILL HAVE A LIGHT TEXTURE ONLY

FOOD SERVICE EQUIP. KEYNOTE

01 — FOOD SERVICE EQUIPMENT IDENTIFIER; ITEM NUMBER

SEE EQUIPMENT SCHEDULE ON FS0.2.0

FOOD SERVICE SHEET LIST

FS0.1.0	FOOD SERVICE EQUIPMENT FLOOR PLAN
FS0.2.0	FOOD SERVICE EQUIPMENT SCHEDULE
FS0.3.0	FOOD SERVICE EQUIPMENT PLUMBING PLAN
FS0.4.0	FOOD SERVICE EQUIPMENT ELECTRICAL PLAN
FS0.5.0	FOOD SERVICE EQUIPMENT BUILDING WORK PLAN (*)
FS0.6.0	FOOD SERVICE EQUIPMENT REFRIGERATION PLAN
FS0.8.0	FOOD SERVICE EQUIPMENT DETAILS
FS0.8.1	FOOD SERVICE EQUIPMENT DETAILS
FS0.9.0	FOOD SERVICE EQUIPMENT ATTACHMENT DETAILS
FS0.9.1	FOOD SERVICE EQUIPMENT ATTACHMENT DETAILS

NOTE:

SEE SHEET FS0.0.0 FOR FOOD FACILITY REQUIREMENT & OTHER APPLICABLE NOTES

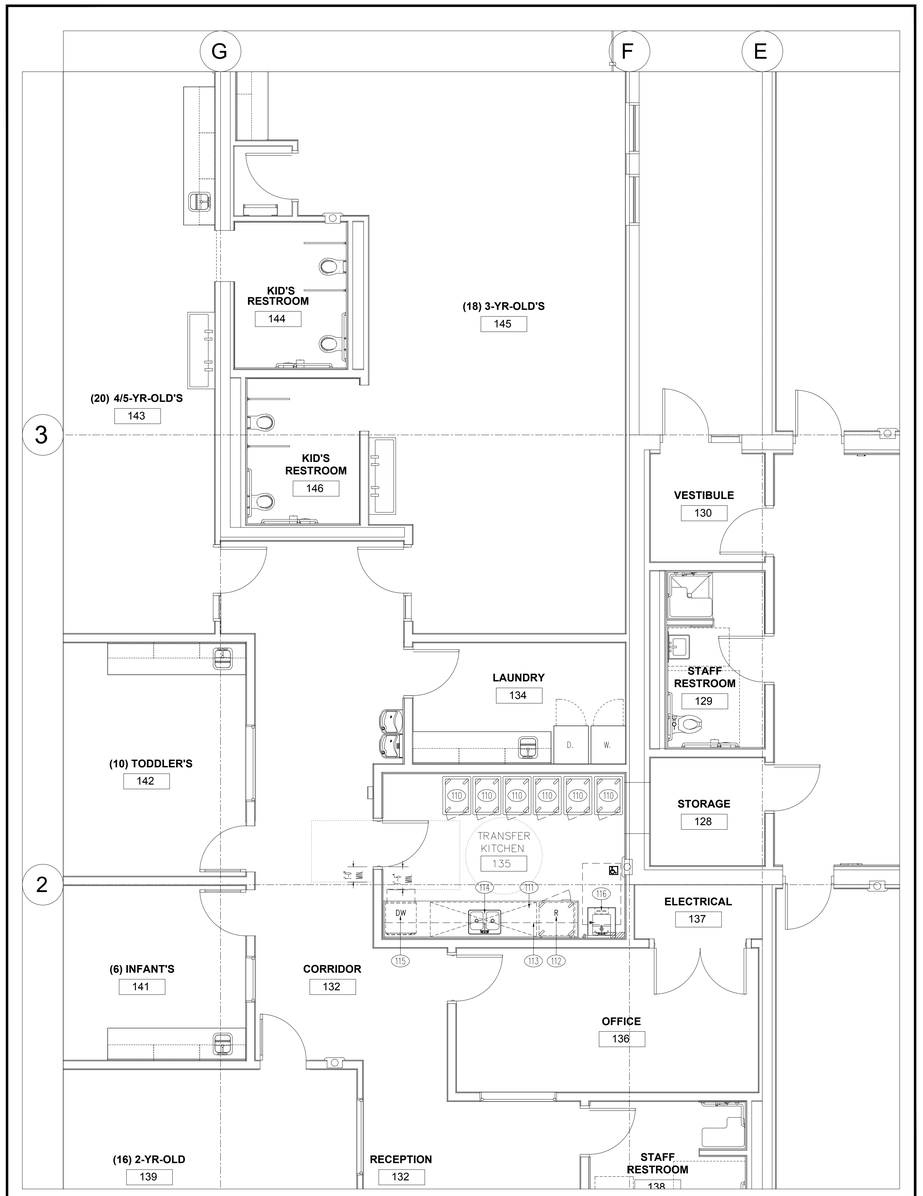

BID ALT "A" - TRANSFER KITCHEN RM 131 FOODSERVICE FLOOR PLAN 1/4" = 1'-0"

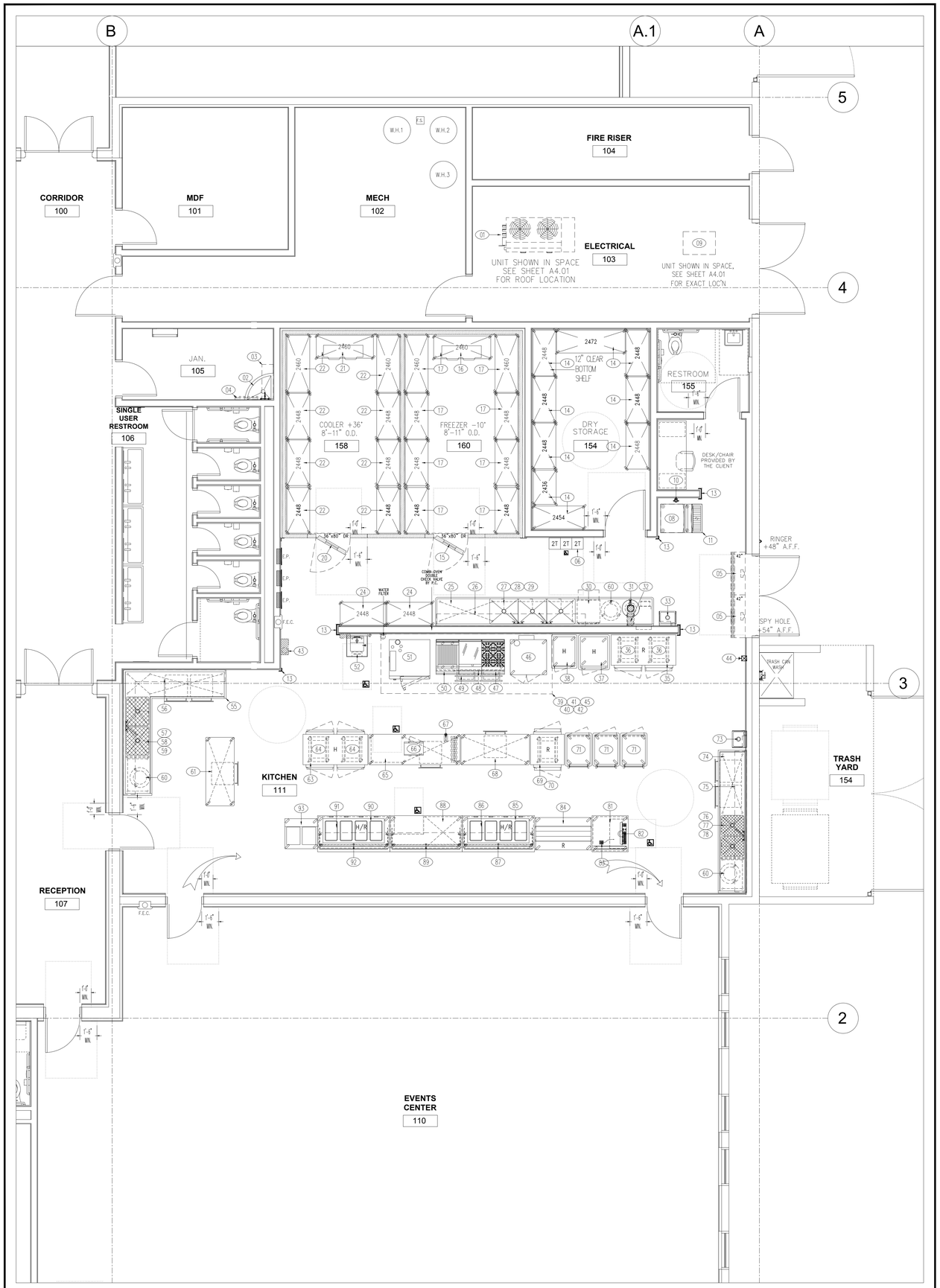

BASE BID - MAIN KITCHEN ROOM 111 FOODSERVICE EQUIPMENT FLOOR PLAN 1/4" = 1'-0"

tsk

225 South Arlington Avenue
Reno NV, 89501
phone: 775.857.2949
fax: 775.857.2403
www.tska.com

THESE DRAWINGS AND SPECIFICATIONS ARE THE PROPERTY OF TATE SNYDER KIMSEY ARCHITECTS AND MAY NOT BE REPRODUCED OR USED FOR ANY PURPOSE WITHOUT THE ARCHITECTS WRITTEN CONSENT. AS INSTRUMENTS OF SERVICE, THESE DOCUMENTS ARE NOT FINAL AND READY FOR USE, AND THEREFORE NOT VALID, UNLESS THEY ARE SEALED, SIGNED AND DATED.

Copyright, Ltd 2022

Consultant

DIELI MURAWKA HOWE
A Division of WEBB FOODSERVICE DESIGN
Food Service Design Consultants
3020 Sungold Drive
Las Vegas, NV 89134
Phone: 619.602.4107
Design By:
RICHARD DIELI

PLEASE RECYCLE

Project

CITY OF FERNLEY
CRRC

Job No: 21-058.00

Owner

CITY OF FERNLEY

50% CONSTRUCTION DOCUMENTS

REVISIONS		
REV	DATE	DESCRIPTION

Sheet Title

FOODSERVICE EQUIPMENT FLOOR PLAN

Date: MARCH 21, 2023

Sheet No:

FS0.1.0

NOTE: SEE SHEETS FS0.9.0, FS0.9.1 FOR ATTACHMENT DET.

FERNLEY COMMUNIUTY CENTER FIXTURE AND EQUIPMENT SCHEDULE AND MECHANICAL REQUIREMENTS

NOTE: SEE SHEETS FS0.9.0, FS0.9.1 FOR ATTACHMENT DET.

BASE BID – MAIN KITCHEN

ITEM	EQUIPMENT DESCRIPTION	EQUIPMENT REMARKS	QTY	ATTACH	EQUIPMENT WEIGHT	ELECTRICAL VOLTS	LOAD HP	LOAD KW	LOAD AMPS	PHASE	CONN.	ELECTRICAL REMARKS	PLUMBING/MECHANICAL HOT WATER HOT	HOT WATER GPH	HOT WATER TEMP	COLD WATER	WASTE	GAS	BTU 1000	PLUMBING/MECHANICAL REMARKS
1.	AIR COOLED ROOF MTD REFRIG RACK	COLDZONE MPL-2C2 SEE SHEET FS0.6.1	1	H FS0.6.1	635	208			50.0	3	D.	FUSE SIZE = 50.0 AMPS; CONNECTED LOAD = 34.1 AMPS; MINIMUM AMPACITY = 38.4 AMPS								RACK SIZE = 72" LONG x 36" WIDE x 37" HIGH PLATFORM SIZE = 80" LONG x 47" WIDE x 6" HIGH
2.	FLOOR MOUNTED MOP SINK W/FAUCET	SPEC'D BY THE PLUMB. ENG. PROVIDED BY THE P.C.	1 EA.		25								1/2"	19	120°	1/2"	1 1/2"			DIRECT WASTE; VERIFY PLUMBING REQUIREMENTS W/ BACK FLOW PREVENTION DEVICE
3.	WALL MOUNTED SHELF	CUSTOM STAINLESS STEEL	1	A-17 FS0.9.0	15															
4.	WALL MOUNTED MOP RACK	INC-TEDDY MK1 NOT SHOWN ON PLANS	1		5															
5.	SPARE No.		–																	
6.	42" WALL MOUNTED AIR CURTAINS	BERNER SHD07-2072A	2	A-6a FS0.9.0	52	120			15.0	1	D.	PROVIDE (1) MICRO-SWITCH FOR ON/OFF DOOR OPERATION								
7.	CURB MOUNTED LOCKERS	FENCO 6231R (1) ACCESSIBLE UNIT	LOT	A-36 FS0.9.1	300															
8.	500 LB. ICE MAKER W/BIN	MANITOWOC IDF-0500N/D-570	1	A-11 FS0.9.0	285	208			10.0	1	D.	FUSE SIZE = 15 AMPS					1"			C.W. FROM WATER FILTER; INDIRECT WASTE TO FLOOR SINK W/2" MIN AIR GAP; FILTERED WATER REQUIRED
9.	REMOTE CONDENSER FOR ITEM 8	MANITOWOC JCF0500	1	E FS0.6.1	130	120			1.82	1	D.	SEE ARCHITECT'S SHEETS FOR EXACT LOCATION 15 AMP CIRCUIT REQUIRED								SELF CONTAINED CONDENSATE EVAPORATOR
10.	WATER FILTERING SYSTEM	MANITOWOC AR-10000	1		25												1/2"			P.C. TO INTERCONNECT COLD WATER TO ICE MAKER
11.	FLOOR TROUGH W/GRATE	CUSTOM STAINLESS STEEL	1														3"			DIRECT WASTE TO A RECESSED FLOOR WASTE
12.	SPARE No.		–																	
13.	CORNER GUARDS & END CAPS	CUSTOM STAINLESS STEEL	LOT		5															
14.	MOBILE DRY STORAGE SHELVING	METRO NC 5-TIER	9		95															
15.	WALK-IN FREEZER W/TRIM (–10°)	THERMALRITE CUSTOM	1	A-20 FS0.9.1	840	120		0.65		1	D.	(3) 44W x 48"L.E.D. & (1)11W. L.E.D. FIXTURES, 250W DR HEATER; SWITHCING BY THE ELECTRICAL CONTRACTOR								
16.	EVAP COIL – PART OF REFRIG. SYSTEM	FOR ITEM 15 SEE SHEET FS0.6.1	1	B FS0.6.1	125	208			2.0	1	D.	SEE DETAIL K/FS0.8.0					3/4"			INSULATED INDIRECT WASTE FROM EVAP COIL TO FLOOR SINK W/1 1/2" MIN AIR GAP
17.	MOBILE 4–TIER STORAGE SHELVING	METRO NK3 4–TIER	9	MOBILE	85															
18.	SPARE No.		–																	
19.	SPARE No.		–																	
20.	WALK-IN COOLER W/TRIM (+36")	THERMALRITE CUSTOM	1	A-20 FS0.9.0	672	120		0.3		1	D.	(3) 44W x 48"L.E.D. & (1)11W. L.E.D. FIXTURES, SWITCHING BY THE ELECTRICAL CONTRACTOR								
21.	EVAP COIL – PART OF REFRIG. SYSTEM	FOR ITEM 20 SEE SHEET FS0.6.1	1	B FS0.6.1	62	120			3.2	1	D.	SEE DETAIL K/FS0.8.0					3/4"			INSULATED INDIRECT WASTE FROM EVAP COIL TO FLOOR SINK W/1 1/2" MIN AIR GAP
22.	MOBILE STORAGE SHELVING	METRO NK3 4–TIER	9	MOBILE	85															
23.	SPARE No.		–																	
24.	DRYING RACKS W/SOLID BOTTOM SHELF	METRO PR48VX3 4–TIER	2	MOBILE	124															
25.	3–COMPARTMENT POT WASH ASSEMBLY	CUSTOM STAINLESS STEEL	1	A-2 FS0.9.0	720															
26.	WALL SHELF	CUSTOM STAINLESS STEEL	1	A-17 FS0.9.0	60															
27.	3–COMPARTMENT SINKS	PART OF ITEM 25 CUSTOM STAINLESS STEEL	1																	
28.	TWIST WASTES W/OVERFLOWS	T&S BRASS B–3952–01	3														2"			INDIRECT WASTE LINE TO A MIN. 3" TRAPPED 12"x12"x10" FLOOR SINK W/4" MIN. AIR GAP
29.	SPLASH MOUNTED FAUCETS	T&S BRASS B–0290–4	2		5								(2)3/4"	75	120°	(2)3/4"				
30.	UNDERCOUNTER DISHWASHER	CHAMPION UL–130	1		215	120			12.0	1	C.O.	NEMA 5–15P; DEDICATED CIRCUIT – 15 AMPS BREAKER	3/4"	32	120°		5/8"			I.W. TO A 3" MIN. TRAPPED F.S. W/1.25" MIN AIR GAP (32 G.P.H. WATER CONSUMPTION)
31.	DISPOSER W/18" CONE/MANUAL SWITCH	IN-SINK-ERATOR SS–200–7/WS	1 EA.		120	208			7.7	1	D.	E.C. TO INTERCONNECT ON-OFF SWITCH TO SOLENOID					2"			DIRECT WASTE; P.C. TO INTERCONNECT SOLENOID TO VACUUM BREAKER
32.	HOSE REEL W/WALL MOUNTED CABINET	T&S BRASS B–2339	1 EA.	A–16 FS0.9.0	35								1/2"	45	120°	1/2"				P.C. TO PLUMB HOT & COLD WATER THRU A PRESSURE "VAB"
33.	HAND SINK W/FAUCET W/R&L SPLASH	W/SOAP & PAPER DISPENSERS ADVANCE TABCO 7–PS–80	1 EA.	A–28 FS0.9.1	35								1/2"	5	105°	1/2"	1 1/2"			DIRECT WASTE
34.	SPARE No.		–																	
35.	2–SECTION ROLL–IN REFRIGERATOR	TRAULSEN RRI-232–UUT–FHS SELF CONTAINED	1	A–9 FS0.9.0	700	120			11.4	1	C.O.	NEMA 5–15P								SELF CONTAINED CONDENSATE EVAPORATOR
36.	ROLL–IN CARTS	FOOD WARMING EQUIP CYR–F1A–C3–18	2		92															
37.	MOBILE HEATED WARMING CABINET	CRES–COR H–137–UA–12–8	1	MOBILE	255	120			16.0	1	C.O.	NEMA 5–15P								
38.	MOBILE HEATED CABINET	CRES–COR H–138–PS–1834D	1	MOBILE	317	120			16.0	1	C.O.	NEMA 5–20P								
39.	TYPE ONE EXHAUST HOOD	SPRING AIR FN–B–MD–15/5 SEE SHEET FS0.10.0	1 EA.	A–13 FS0.9.0	825	120		0.1			D.	(5) 17W L.E.D. LIGHT FIXTURES SWITCHING BY THE ELECTRICAL CONTRACTOR								(1) 27"x 10" EXH DUCT @ 2805 CFM @ 0.63 S.P. EA. (2) 34"x 8" MUA DUCTS @ 1335 CFM @ 0.20 S.P. (EA.)
40.	EXHAUST SYSTEM	SPEC'D BY THE MECH. ENG. PROVIDED BY H.V.A.C. CONTR.	1									BY THE H.V.A.C. CONTRACTOR VERIFY ELECTRICAL REQUIREMENTS								
41.	MAKE–UP AIR SYSTEM	SPEC'D BY THE MECH. ENG. PROVIDED BY H.V.A.C. CONTR.	1									BY THE H.V.A.C. CONTRACTOR VERIFY ELECTRICAL REQUIREMENTS								
42.	FIRE SUPPRESSION SYSTEM PIPING SYSTEM	ANSUL R–102 (UL 300 LISTED) SEE DETAIL H/FS0.10.0	1																	P.C. TO INSTALL EXECT. 4" ANSUL GAS S.O.V.; VALVE BY F.S.E.C. (VERIFY W/PLUMBING ENGINEER)
43.	FIRE SUPPRESSION SYS. CONTROL AUTOMAN	ANSUL R–102 PART OF ITEM 42	1	A–6 FS0.9.0	75	120			13.0	1	D.	20 AMP DEDICATED CIRCUIT								
44.	FIRE SUPPRESSION SYSTEM MANUAL PULL	ANSUL R–102 PART OF ITEM 42	1																	
45.	S/S WALL FLASHING W/HOOD TRIM	CUSTOM STAINLESS STEEL	LOT																	
46.	MOBILE DOUBLE CONVECTION OVEN	BLODGETT DFG–100–ES DBL W/QUICK DISCONNECT	1	A–40 FS0.9.1	1095	(2)120			(2)8.0	(2)1	(2)C.O.	NEMA 5–15P					3/4"	90		(1) REAR NATURAL GAS CONNECTION (F.S.E.C. TO PROVIDE QUICK DISCONNECT AND RESTRAINING DEVICE)
47.	24" 4–OPEN BURNER	VULCAN V48D4 5" HIGH FLUE RISER	1	A–18 FS0.9.0	207							BATTERY SPARK IGNITION					1.25"	140		(1) REAR NATURAL GAS CONNECTION (F.S.E.C. TO PROVIDE QUICK DISCONNECT AND RESTRAINING DEVICE)
48.	24" GRIDDLE	VULCAN VCTH 5" HIGH FLUE RISER & Q.D.	1	A–18 FS0.9.0	243												1.25"	60		(1) REAR NATURAL GAS CONNECTION (F.S.E.C. TO PROVIDE QUICK DISCONNECT AND RESTRAINING DEVICE)
49.	MOBILE 72" REFRIGERATED BASE	VULCAN VS72 SELF CONTAINED	1	MOBILE	555	120			6.7	1	C.O.	NEMA 5–15P								SELF CONTAINED CONDENSATE EVAPORATOR
50.	24" CHAR–BROILER	VULCAN VCBB24 5" HIGH FLUE RISER	1	A–18 FS0.9.0	290												1.25"	65		(1) REAR NATURAL GAS CONNECTION (F.S.E.C. TO PROVIDE QUICK DISCONNECT AND RESTRAINING DEVICE)
51.	FULL SIZE GAS COMBI OVEN W/(2) RACKS	RATIONAL IDP 20–FULL SIZE G W/WATER FILTER & Q.D.s	1	A–11 FS0.9.0	835	208			15.0	1	D.					2)1/2"	2"	1"	304	I.W. TO F.S. W/4" AIR GAP, CONNECT DRAIN W/HIGH TEMP PIPING; (1) REAR NATURAL GAS CONNECTION
52.	ACCESSIBLE HAND SINK W/FAUCET	JOHN BOOS PBHS–ADA–P–STD W/SOAP & P.T. DISPENSER	1 EA.	A–28 FS0.9.1	35								1/2"	5	105°	1/2"	1 1/2"			DIRECT WASTE
53.	SPARE No.		–																	
54.	SPARE No.		–																	
55.	L–SHAPED PREP TABLE W/2–COMP'T SINKS	W/DRAWERS & SINK COVERS CUSTOM STAINLESS STEEL	1	A–2 FS0.9.0	520	120			15.0	1	C.O.	(3) CONVENIENCE OUTLETS								
56.	L–SHAPED WALL SHELF	CUSTOM STAINLESS STEEL	1	A–17 FS0.9.0	100															
57.	2–COMPARTMENT SINKS	PART OF ITEM 55 CUSTOM STAINLESS STEEL	2																	
58.	TWIST WASTES W/OVERFLOW	T&S BRASS B–3952–01	2														2"			INDIRECT WASTE LINE TO A MIN. 3" TRAPPED 12"x12"x10" FLOOR SINK W/1" MIN. AIR GAP
59.	SPLASH MOUNTED FAUCETS	T&S BRASS B–0231–MH4	1		5								1/2"	10	120°	1/2"				
60.	TRASH CANS W/DOLLY AND LID	RUBBERMAID FG26–2000–GRAY	3 EA.	MOBILE																
61.	MOBILE WORK TABLE W/DRAWER	CUSTOM STAINLESS STEEL	1	MOBILE	150	120			15.0	1	C.O.	(2) CONVENIENCE OUTLETS (NEMA 5–15P) DROP–CORD STUB–DOWN FROM CEILING								
62.	SPARE No.		–																	
63.	2–SECTION ROLL–THRU HEATED CABINET	TRAULSEN RHG232P–FHS	1	A–9 FS0.9.0	630	120/208			10.14	1	D.	STUB–DOWN FROM CEILING								
64.	ROLL–IN CARTS	FOOD WARMING EQUIP CYR–F1A–C3–18	2		92															
65.	MOBILE TABLE W/ACCESSIBLE STATION	W/SHEET PAN STORAGE CUSTOM STAINLESS STEEL	1	MOBILE	280	120			15.0	1	C.O.	(2) CONVENIENCE OUTLETS (DROP–CORD & PLUG) STUB–DOWN FROM CEILING								
66.	MICROWAVE OVEN	PANASONIC NE–1064F	1		34	120			13.4	1	C.O.	STUB–DOWN FROM CEILING NEMA 5–15P								
67.	TABLE MOUNTED CAN OPENER	EDLUND S–11L	1																	
68.	MOBILE WORK TABLE W/(1) DRAWER	CUSTOM STAINLESS STEEL	1	MOBILE	240	120			15.0	1	C.O.	(2) CONVENIENCE OUTLETS (DROP–CORD & PLUG) STUB–DOWN FROM CEILING								
69.	1–SECTION ROLL–THRU REFRIGERATOR	TRAULSEN RRI132LPUT–FHS SELF CONTAINED	1	A–9 FS0.9.0	490	120			11.6	1	C.O.	STUB–DOWN FROM CEILING NEMA 5–15P								SELF CONTAINED CONDENSATE EVAPORATOR
70.	ROLL–IN CART	FOOD WARMING EQUIP CYR–F1A–C3–18	1		92															
71.	MOBILE HEATED CABINETS	CRES–COR H–138–PS–1834D	3	MOBILE	317	120			16.0	1	C.O.	NEMA 5–20P								
72.	SPARE No.		–																	
73.	HAND SINK W/FAUCET W/R&L SPLASH	W/SOAP & PAPER TOWEL DISPENSERS	1 EA.	A–28 FS0.9.1	35							ADVANCE–TABCO 7–PS–80 SINK T&S BRASS B–1146–04	1/2"	5	105°	1/2"	1 1/2"			DIRECT WASTE
74.	PREP TABLE W/2–COMP'T SINKS	W/DRAWERS & SINK COVERS CUSTOM STAINLESS STEEL	1	A–2 FS0.9.0	520	120			15.0	1	C.O.	(3) CONVENIENCE OUTLETS								
75.	WALL SHELF	CUSTOM STAINLESS STEEL	1	A–17 FS0.9.0	100															

BASE BID – MAIN KITCHEN

ITEM	EQUIPMENT DESCRIPTION	EQUIPMENT REMARKS	QTY	ATTACH	EQUIPMENT WEIGHT	ELECTRICAL VOLTS	LOAD HP	LOAD KW	LOAD AMPS	PHASE	CONN.	ELECTRICAL REMARKS	PLUMBING/MECHANICAL HOT WATER HOT	HOT WATER GPH	HOT WATER TEMP	COLD WATER	WASTE	GAS	BTU 1000	PLUMBING/MECHANICAL REMARKS
76.	2–COMPARTMENT SINK	PART OF ITEM 74 CUSTOM STAINLESS STEEL	1																	
77.	TWIST WASTES W/OVERFLOW	T&S BRASS B–3952–01	2														2"			INDIRECT WASTE LINE TO A MIN. 3" TRAPPED 12"x12"x10" FLOOR SINK W/4" MIN. AIR GAP
78.	SPLASH MOUNTED FAUCET	T&S BRASS B–0231–MH4	1		5								1/2"	10	120°	1/2"				
79.	SPARE No.		–																	
80.	SPARE No.		–																	
81.	MOBILE CASHIER STAND (34" H.)	GA SYSTEMS 03130A	1	MOBILE	200															
82.	POINT–OF–SALE SYSTEM	PROVIDED BY OWNER INSTALLED BY THE G.C.	1		15	120			5.0	1	C.O.	DEDICATED CIRCUIT W/DATA LINES TO SERVER FLOOR MTD OUTLET; VERIFY ELECTRICAL REQUIREMENTS								
83.	CARD READERS	PROVIDED BY OWNER INSTALLED BY THE G.C.	1		5	120			5.0	1	C.O.	DEDICATED CIRCUIT W/DATA LINES TO SERVER FLOOR MTD OUTLET; VERIFY ELECTRICAL REQUIREMENTS								
84.	MOBILE MILK COOLER	BEV–AIRE 13FSMC–1–S SELF–CONTAINED	1	MOBILE	498	120			8.3	1	C.O.	NEMA 5–15P STUB–UP FROM FLOOR								SELF CONTAINED CONDENSATE EVAPORATOR
85.	STUDENT'S HOT/COLD SERVING COUNTER	DUKE 751–74SS STAINLESS STEEL	1	MOBILE	400															
86.	DROP–IN 4–PAN HOT/COLD FOOD UNIT	DUKE HCF–4 DRY OPERATIONS	1		175	120/208			16.0	1	C.O.	NEMA 14–20P STUB–UP FROM FLOOR								SELF CONTAINED
87.	SNEEZE GUARD W/END GLASS	W/S/S PASS SHELF ENGLISH MFG AMA–101A	LOT		20															
88.	SERVING COUNTER W/ACCESSIBLE STATION	DUKE 751–74SS STAINLESS STEEL	1	MOBILE	400	120			8.3	1	C.O.	NEMA 5–15P STUB–UP FROM FLOOR								
89.	SNEEZE GUARD W/END GLASS	W/S/S PASS SHELF ENGLISH MFG AMA–101A	LOT		20															
90.	STUDENT'S HOT/COLD SERVING COUNTER	DUKE 751–74SS STAINLESS STEEL	1	MOBILE	400															
91.	DROP–IN 4–PAN HOT/COLD FOOD UNIT	DUKE HCF–4 DRY OPERATIONS	1		175	120/208			16.0	1	C.O.	NEMA 14–20P STUB–UP FROM FLOOR								SELF CONTAINED
92.	SNEEZE GUARD W/END GLASS	W/S/S PASS SHELF ENGLISH MFG AMA–101A	LOT		20															
93.	MOBILE TRAY DISPENSER	CADDY CORP CM–1814–2C	1	MOBILE	155															
94.	SPARE No.		–																	
95.	SPARE No.		–																	
96.	SPARE No.		–																	
97.	SPARE No.		–																	
98.	SPARE No.		–																	
99.	SPARE No.		–																	
100.	SPARE No.		–																	
101.	SPARE No.		–																	
102.	SPARE No.		–																	
103.	SPARE No.		–																	
104.	SPARE No.		–																	
105.	SPARE No.		–																	

BID ALT "A" – TRANSFER KITCHEN

ITEM	EQUIPMENT DESCRIPTION	EQUIPMENT REMARKS	QTY	ATTACH	EQUIPMENT WEIGHT	ELECTRICAL VOLTS	LOAD HP	LOAD KW	LOAD AMPS	PHASE	CONN.	ELECTRICAL REMARKS	PLUMBING/MECHANICAL HOT WATER HOT	HOT WATER GPH	HOT WATER TEMP	COLD WATER	WASTE	GAS	BTU 1000	PLUMBING/MECHANICAL REMARKS
110.	MOBILE INSULATED TRANSPORT CABINETS	CRES–COR 109–184D	6	MOBILE	150															
111.	WORK COUNTER	CUSTOM STAINLESS STEEL	1	A–6 FS0.9.0	550	120			15.0	1	C.O.	(2) CONVENIENCE OUTLETS								
112.	U/C REFRIGERATOR W/3" CASTERS	BEVERAGE AIR WTR27HC–FLT SELF CONTAINED	1	MOBILE	192	120			2.0	1	C.O.	NEMA 5–15P								SELF CONTAINED CONDENSATE EVAPORATOR
113.	WALL SHELF	CUSTOM STAINLESS STEEL	1	A–17 FS0.9.0	60															
114.	DROP–IN 2–COMPARTMENT SINK W/FAUCET	ADVANCE TABCO DI–2–10 ADVANCE TABCO FAUCET	1 EA.		35								1/2"	5	105°	1/2"	1 1/2"			I.W. TO A 3" MIN. TRAPPED F.S. W/3" MIN AIR GAP (32 G.P.H. WATER CONSUMPTION)
115.	UNDERCOUNTER DISHWASHER	CHAMPION UL–130	1		215	120			12.0	1	C.O.	NEMA 5–15P; DEDICATED CIRCUIT – 15 AMPS BREAKER	3/4"	32	120°		5/8"			I.W. TO A 3" MIN. TRAPPED F.S. W/1.25" MIN AIR GAP (32 G.P.H. WATER CONSUMPTION)
116.	ACCESSIBLE HAND SINK W/FAUCET	JOHN BOOS PBHS–ADA–P–STD W/SOAP & P.T. DISPENSER	1 EA.	A–28 FS0.9.1	35								1/2"	5	105°	1/2"	1 1/2"			DIRECT WASTE
117.	SPARE No.		–																	
118.	SPARE No.		–																	
119.	WALL BACKING	PROVIDED BY F.S.E.C. SEE KEYNOTE 1/SHEET FS.05.0	LOT	A–24 FS0.9.1																

ABBREVIATIONS

A.C.C.	APPLICABLE CATEGORY CONTRACTOR	CW	COLD WATER	FLUOR	FLUORESCENT	MECH	MECHANICAL	RPPD	REDUCED PRESSURE PRINCIPLE DEVICE
A.F.F.	ABOVE FINISHED FLOOR	D.	DIRECT	FPM	FOOT POUNDS PER MINUTE	MFR	MANUFACTURER	S.O.V.	SHUT–OFF VALVE
A.P.	AIR PRESSURE	DW	DISH MACHINE	FRP	FIBERGLAS REINFORCED PLASTIC	MIN.	MINIMUM	SP	STATIC PRESSURE
ACR	AIR CONDITIONING REFRIGERATION	DBL	DOUBLE	F.S.S.	FIRE SUPPRESSION SYSTEM	MTD.	MOUNTED	S/C	SELF CONTAINED
ADA	AMERICAN DISABILITY ACT	DEPT	DEPARTMENT	FT	FOOT or FEET	MUA	MAKE–UP AIR	S/S	STAINLESS STEEL
ADDT'L	ADDITIONAL	DET.	DETAIL			MULL	MULLION	SCHED	SCHEDULE
ADJ.	ADJUSTABLE	DIA	DIAMETER	G.C.	GENERAL CONTRACTOR			SECT	SECTION
ALT.	ALTERNATE	DIAG	DIAGONAL	G.M.	GAS METER			SHT	SHEET
ALUM.	ALUMINUM	DIM.	DIMENSION	GA.	GAUGE	N.A.	NOT AVAILABLE	SIM	SIMILAR
AMPS.	AMPERES	DISP.	DISPENSER	GAL.	GALLON	NSF	NATIONAL SANITATION FOUNDATION	SL/SF	SOLID SURFACE
APPROX.	APPROXIMATE	DIV.	DIVISION	GALV	GALVANIZED	N.T.S.	NOT TO SCALE	SMACNA	SHEET METAL AIR CONDITIONING NAT. ASSOC.
ARCH.	ARCHITECT	DMH	DIELI MURAWKA HOWE	GPH	GALLONS PER HOUR	N/A	NOT APPLICABLE	SNZ GD	SNEEZE GUARD
ASS'Y	ASSEMBLY	DN	DOWN	GPM	GALLONS PER MINUTE	NAT	NATURAL	SPEC	SPECIFICATIONS
ATTACH.	ATTACHMENT	DP	DEEP			No.	NUMBER	SQ FT	SQUARE FEET
		DPDT	DOUBLE PULL, DOUBLE THROW	H&C	HOT AND COLD WATER			STMR	STEAMER
B.F.C.	BELOW FINISHED CEILING	DSA	DIVISION OF THE STATE ARCHITECT	H.	HEIGHT	OB	OPEN BURNER	SW	SWITCH
B/C	BLOWER COIL	DTA	DIAMOND TREAD ALUMINUM	H.I.D.	HIGH INTENSITY DISCHARGE	O.C.	ON CENTER	SYM	SYMBOL
BLDG	BUILDING	DWG	DRAWING	H.V.A.C.	HEATING/VENTILATING AND AIR CONDITIONING	O.D.	OUTSIDE DIAMETER	SYS	SYSTEM
BLK	BLOCKING	DWR	DRAWER	HACCP	HAZARD ANALYSIS CRITICAL CONTROL POINT	OPNG	OPENING		
BPD	BACKFLOW PREVENTION DEVICE	E.	EXISTING	HCAI	HEALTH CARE & ACCESS INFORMATION	OZ	OUNCE	T.B.D.	TO BE DETERMINED
BRKT	BRACKET	E.C.	ELECTRICAL CONTRACTOR	HORIZ	HORIZONTAL			T.C.	TRASH CAN
BTU	BRITISH THERMAL UNITS PER HOUR	E.F.	EXHAUST FAN	HP	HORSE POWER	P.B.	PULL BOX	TEL CO	TELEPHONE COMPANY
BWP	BUILDING WORKS PLAN	E.G.	FOR EXAMPLE	HTR	HEATER	P.C.	PLUMBING CONTRACTOR	TEMP.	TEMPERATURE
		EMT	ELECTRICAL METALLIC TUBING	HW	HOT WATER	PERF.	PERFORATED	TYP	TYPICAL
C.O.	CONVIENENCE OUTLET	E.P.	ELECTRICAL PANEL			PG	PAGE		
C.T.	CERAMIC TILE	EA	EACH	I.D.	INSIDE DIMENSION	PH	PHASE	UBC	UNIFORM BUILDING CODE
C/E	CONDENSATE EVAPORATOR	ELEV	ELEVATION	I.E.	THEREFORE	PL	PLATE	UDS	UTILITY DISTRIBUTION SYSTEM
C/L	CENTER LINE			I.W.	INDIRECT WASTE	PREP	PREPARATION	UL	UNDERWRITERS LABORATORY
C/T	COUNTER TOP	EPH	ENVIRONMENTAL HEALTH PROTECTION	IN.	INCHES	PREV	PREVIOUS	UMC	UNIFORM MECHANICAL CODE
C/W	COMES WITH	EQ.	EQUAL	INFO	INFORMATION	PSF	POUNDS PER SQUARE FOOT	UPC	UNIFORM PLUMBING CODE
CAB.	CABINET	EQUIP	EQUIPMENT	INSUL	INSULATION	PSI	POUNDS PER SQUARE INCH	UV	ULTRA VIOLET
CANT.	CANTILEVER	ETC	ET CETERA	INT	INTERIOR	PT	POINT	U/C	UNDER COUNTER
CCD	CONSTRUCTION CHANGE DIRECTIVE	EVAP	EVAPORATOR	IPS	INTERNAL PIPE SIZE	PVC	POLY VINYL CHLORIDE		
CEIL.	CEILING	EXH	EXHAUST	J–BOX	JUNCTION BOX			VAV	VARIABLE AIR VOLUME
CFM	CUBIC FEET PER MINUTE	EXT	EXTERIOR	KW	KILOWATTS	Q.D.	QUICK DISCONNECT	VCT	VINYL COMPOSITION TILE
CLR	CLEAR	E.M.S.	ENERGY MANAGEMENT SYSTEM			Q.T.	QUARRY TILE	VS	VERSUS
CMU	CONCRETE MASONRY UNIT	F.D.	FLOOR DRAIN	L.	LENGTH	QTY	QUANTITY	VFD	VARIABLE FREQUENCY DRIVE
CO2	CARBON DIOXIDE	F.J.	FIELD JOINT	L/P	LAMINATED PLASTIC			W.	WIDTH
COL	COLUMN	F.S.	FLOOR SINK	LBS	POUNDS	RAD	RADIUS	W.G.	WATER GAUGE
COMP'R	COMPRESSOR	F.S.E.C.	FOODSERVICE EQUIPMENT CONTRACTOR	LIN	LINEAR	RECOM'D	RECOMMENDED	W.H.	WATER HEATER
COMP'T	COMPARTMENT	F.T.	FLOOR TROUGH	LOCN	LOCATION	REFRIG	REFRIGERATOR	W.I.	WALK IN
CONC	CONCRETE	F.T.D.	FAHRENHEIT TEMPERATURE DIFFERENCE	LTS	LIGHTS	REMOV	REMOVABLE	W.I.C.	WIDTH IN CLEAR
CONN.	CONNECTION	FEWD	FOOD ESTABLISHMENT WASTEWATER DISCHARGE			REQD	REQUIRED	W/	WITH
CONT.	CONTINUOUS	FIN.	FINISH	MACH	MACHINE	RLA	RUNNING LOAD AMPS	WGT	WEIGHT
CONTR.	CONTRACTOR	FIXT	FIXTURE	MAT.	MATERIAL	RM	ROOM	W.P.	WATER PRESSURE
CUST.	CUSTOM	FLR	FLOOR	MAX.	MAXIMUM	RND	ROUND	X–BRC	CROSS–BRACING

tsk
225 South Arlington Avenue
Reno NV, 89501
phone: 775.857.2949
fax: 775.857.2403
www.tska.com

THESE DRAWINGS AND SPECIFICATIONS ARE THE PROPERTY OF TATE SNYDER KIMSEY ARCHITECTS AND MAY NOT BE REPRODUCED OR USED FOR ANY PURPOSE WITHOUT THE ARCHITECTS WRITTEN CONSENT. AS INSTRUMENTS OF SERVICE, THESE DOCUMENTS ARE NOT FINAL AND READY FOR USE, AND THEREFORE NOT VALID, UNLESS THEY ARE SEALED, SIGNED AND DATED.

Copyright, Ltd 2022

Consultant

DIELI MURAWKA HOWE
A Division of WEBB FOODSERVICE DESIGN
Food Service Design Consultants
3020 Sungold Drive
Las Vegas, NV 89134
Phone: 619.602.4107
Design By:
RIC

PLUMBING LEGEND

- COLD WATER STUB
- COLD WATER STUB (FILTERED WATER)
- HOT WATER STUB
- DIRECT WASTE
- INDIRECT DRAIN LINE TO FLOOR SINK
- GAS STUB (NATURAL GAS SUPPLY)
- FLOOR DRAIN (WITH SLOPE PER CODE)
- (1) ITEM NUMBER (SEE EQUIPMENT SCHEDULE)
- [1] KEYNOTE SYMBOL (SEE KEYNOTES BELOW)
- ANSUL GAS SHUT-OFF VALVE
- FLOOR SINK
- FLOOR SINK (WITH 1/2 GRATE) WITH 1/2" MAX. GRATE SPACING ALL DIRECTIONS
- FLOOR SINK (WITH 3/4 GRATE) 1/2" MAX. GRATE SPACING ALL DIRECTIONS

NOTE:
REFERENCE TO PLUMBING ENGINEERING DRAWINGS FOR ADDITIONAL INFORMATION

NOTE:
SEE SHEET FS0.0.0 FOR PLUMBING NOTES AND OTHER APPLICABLE NOTES

PLUMBING KEYNOTES

1. FILTERED WATER REQUIRED. VERIFY REQUIREMENTS WITH THE VENDOR
2. 1.5" GAS SHUT-OFF VALVE - VERIFY SIZE, QUANTITY & LOCATION W/PLUMBING ENGINEER
3. PLUMBING REQUIREMENTS FOR THESE AREAS TO BE VERIFIED WITH THE ARCHITECT AND/OR PLUMBING ENGINEER
4. ACCESSIBLE HAND SINK - SEE DETAIL A/FS0.8.0
5. 3-COMPARTMENT POT SINK TO GREASE INTERCEPTOR - SEE DETAIL E/FS0.8.0
6. FLOOR SINKS IN THE WARE WASHING AREA SHALL BE 12" x12" x10" DEEP FLOOR SINK, MINIMUM 3" TRAPPED
7. DRAIN LINE FROM EVAP COIL TO FLOOR SINK SEE DETAIL E/FS0.6.1
8. 8" x 8" x 6" DEEP FLOOR SINK
9. FLOOR TROUGH WITH SUBWAY GRATE - SEE DETAIL W/FS0.8.1
10. WALL MOUNTED HOSE REEL - SEE DETAIL F/FS0.8.0
11. DISPOSER WITH CONTROL PANEL - SEE DETAIL D/FS0.8.0
12. HOT & COLD WATER STUB-UP AT +10" A.F.F., TEE-OFF AND CONNECT AS REQUIRED
13. P.C. TO INTER-CONNECT INDIRECT WASTE TO DRAIN COOLING KIT TO FLOOR SINK
14. NOT USED
15. PLUMBING CONTRACTOR TO PROVIDE AND INSTALL TEMPERING VALVES AND HOSE BIB
16. MOP SINK FAUCET, FILLER HOSES, PRE-RINSE FAUCETS, CARBONATORS, COMBI-OVENS, AND COUNTERTOP EQUIPMENT W/WATER CONNECTIONS TO BE PROVIDED WITH AN APPROVED BACKFLOW PREVENTION DEVICE WITH REDUCED PRESSURE PRINCIPLE. BACKFLOW DEVICE SHALL BE INSTALLED UPSTREAM OF ANY POTENTIAL HAZARD BETWEEN POTABLE WATER AND THE SOURCE OF CONTAMINATION.
17. NOT USED
18. NOT USED
19. NOT USED
20. SOFTEN HOT WATER FOR: DISHWASHERS, BOOSTER HEATERS, STEAMERS, AND COMBI-OVENS. FILTERED WATER FOR: COFFEE MAKERS, ICE MAKERS, DRINK DISPENSERS AND COMBI-OVENS. TREATED WATER (TOTAL DISOLVED SOLIDS) FOR: BOILERS AND STEAMERS.

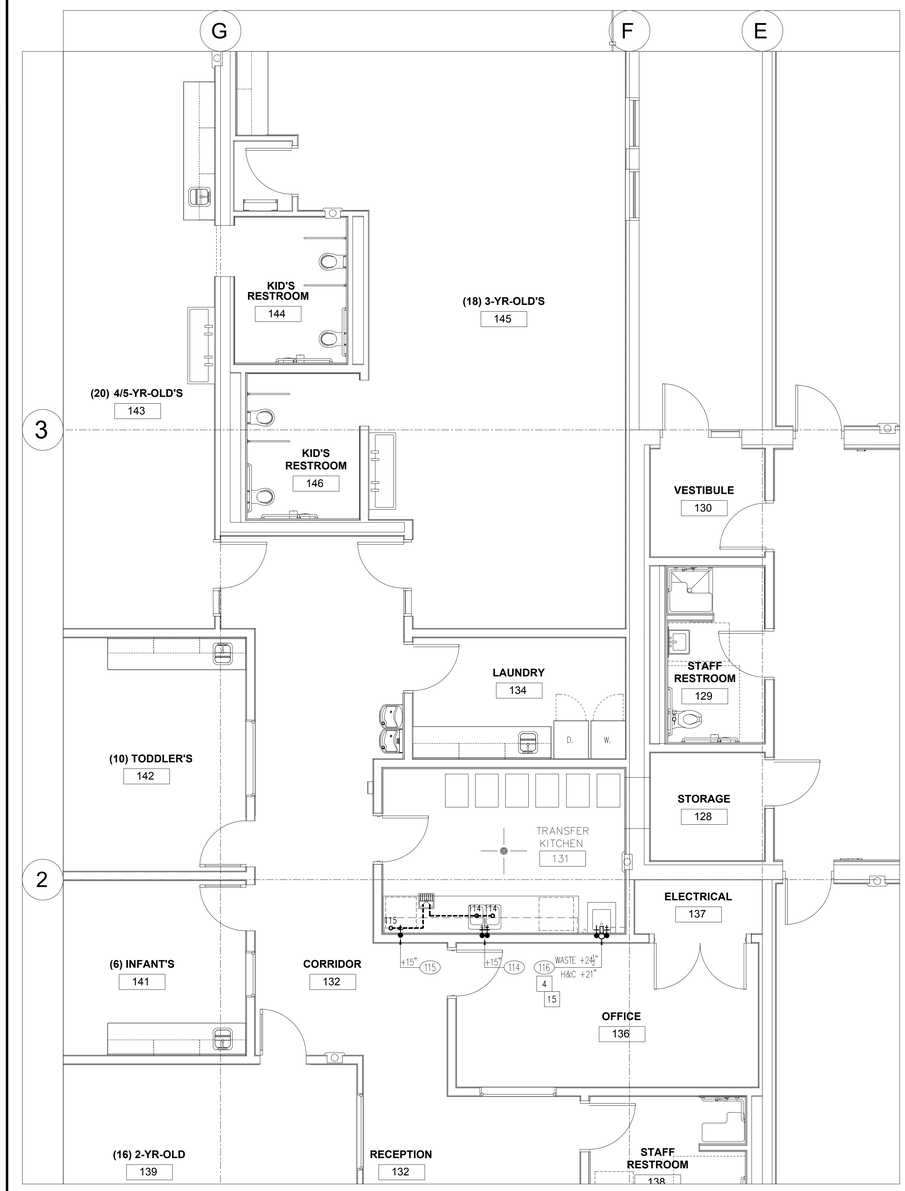

BID ALT "A" - TRANSFER KITCHEN ROOM 131 PLUMBING PLAN 1/4" = 1'-0"

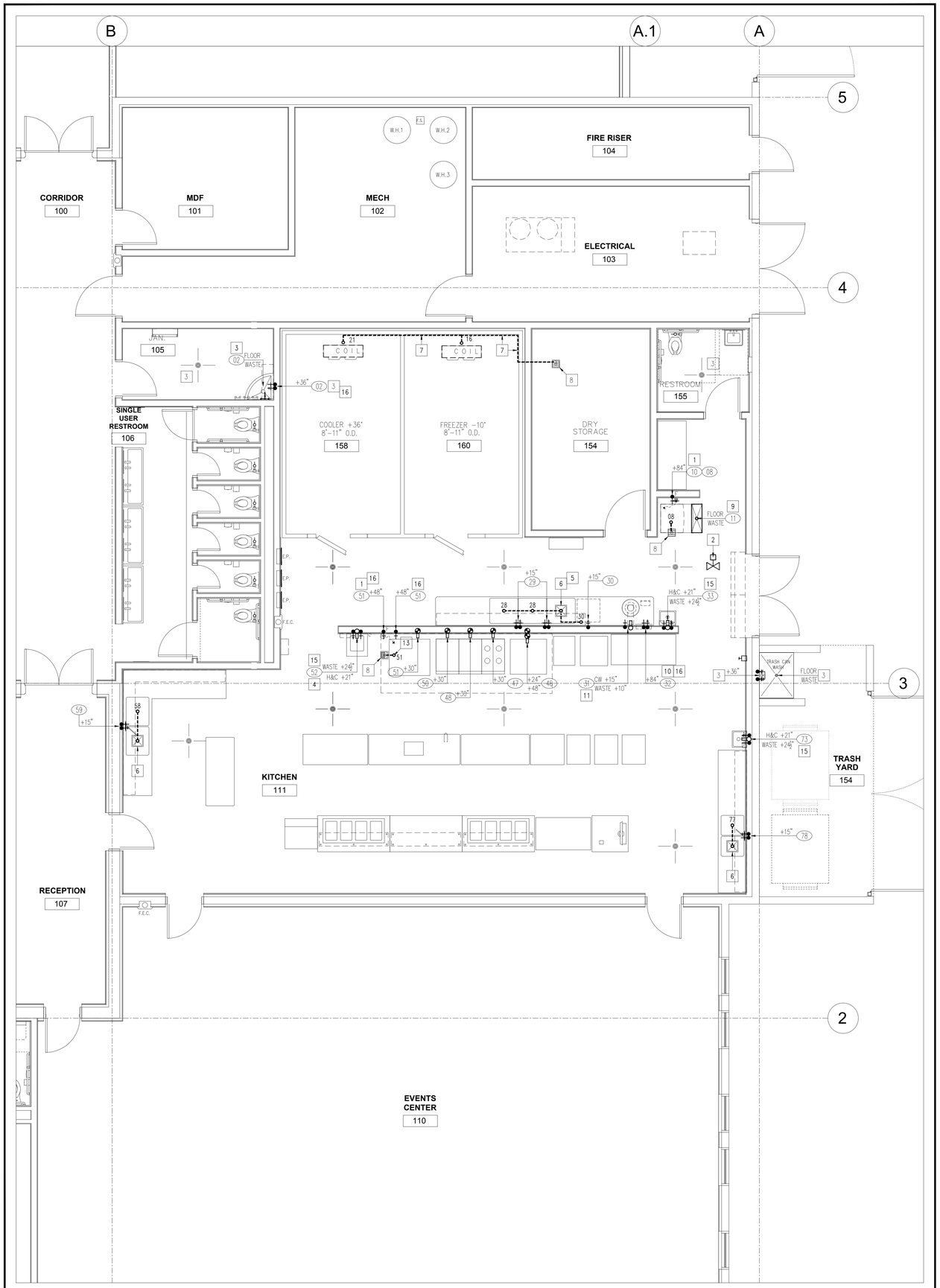

BASE BID - MAIN KITCHEN ROOM 111 FOODSERVICE EQUIPMENT PLUMBING PLAN 1/4" = 1'-0"

tsk
225 South Arlington Avenue
Reno NV, 89501
phone: 775.857.2949
fax: 775.857.2403
www.tska.com

THESE DRAWINGS AND SPECIFICATIONS ARE THE PROPERTY OF TATE SNYDER KIMSEY ARCHITECTS AND MAY NOT BE REPRODUCED OR USED FOR ANY PURPOSE WITHOUT THE ARCHITECTS WRITTEN CONSENT. AS INSTRUMENTS OF SERVICE, THESE DOCUMENTS ARE NOT FINAL AND READY FOR USE, AND THEREFORE NOT VALID, UNLESS THEY ARE SEALED, SIGNED AND DATED.

Copyright, Ltd 2022

Consultant

DIELI MURAWKA HOWE
A Division of WEBB FOODSERVICE DESIGN
Food Service Design Consultants
3020 Sungold Drive
Las Vegas, NV 89134
Phone: 619.602.4107
Design By:
RICHARD DIELI

PLEASE RECYCLE

Project

CITY OF FERNLEY
CRRC

Job No: 21-058.00

Owner

CITY OF FERNLEY

50% CONSTRUCTION DOCUMENTS

REVISIONS		
REV	DATE	DESCRIPTION

Sheet Title

FOODSERVICE EQUIPMENT PLUMBING PLAN

Date: MARCH 21, 2023

Sheet No:

FS0.3.0

ELECTRICAL LEGEND

- 120 VOLT 1ø CONVENIENCE OUTLET (C.O.)
- 120 VOLT 1ø DIRECT FLEXIBLE CONNECTION
- 120 VOLT 1ø 8W LED LIGHT FIXTURE
- 120V/1ø DROP CORD DOWN FROM BUSBAR @ 60" A.F.F.
- 208V/1ø DROP CORD DOWN FROM BUSBAR @ 60" A.F.F.
- 208 VOLT 1ø OR 3ø CONVENIENCE OUTLET (C.O.)
- 120/208 VOLT 1ø CONVENIENCE OUTLET (C.O.)
- 208 VOLT 1ø OR 3ø DIRECT FLEXIBLE CONNECTION
- 120/208 VOLT 1ø DIRECT FLEXIBLE CONNECTION
- 480 VOLT 3ø DIRECT FLEXIBLE CONNECTION
- JUNCTION BOX
- SWITCH
- SWITCH FOR HOOD LIGHTS
- INTERLOCK EXHAUST & M.U.A. FANS
- EXHAUST FAN
- MAKE-UP AIR FAN
- FIRE PULL-BOX (+48" A.F.F.)
- 120 VOLT 1ø 36W LED HOOD OR W.I. LIGHT FIXTURE
- DATA LINE (VERIFY W/ELECTRICAL CONTRACTOR)
- +48" UTILITY MOUNTING HEIGHT ABOVE FINISHED FLOOR
- (1) ITEM NUMBER (SEE EQUIPMENT SCHEDULE)
- 123 ITEM NUMBER (SEE EQUIPMENT SCHEDULE)
- FIXTURE MOUNTED OUTLET
- 1 KEYNOTE SYMBOL (SEE KEYNOTES AT BOTTOM)

ELECTRICAL KEYNOTES

1. J-BOX STUB-DOWN FROM ABOVE AND CONNECT TO HOOD LIGHTS
2. J-BOX LOCATED 12" ABOVE CEILING LINE FOR FIRE SUPPRESSION SYSTEM AUTOMAN (SEE DETAIL J/FS0.8.0)
3. OCTAGON PULL BOX FOR FIRE SUPPRESSION SYSTEM – SEE DETAIL J/FS0.8.0
4. WALL MOUNTED AIR CURTAIN'S MICRO SWITCH – SEE DETAIL G/FS0.8.0
5. NOT USED
6. DATA LINE TO SERVER VERIFY LOCATION WITH ELECTRICAL ENGINEER
7. TYPICAL WALK-IN BOX WIRING – SEE DETAIL K/FS0.8.0
8. CONVENIENCE OUTLETS – 120 VOLT 1ø 20 AMP; VERIFY ADDITIONAL LOCATIONS W/ELECTRICAL ENGINEER
9. ADDITIONAL CONVENIENCE OUTLETS, DATA & TELEPHONE LINES (IF APPLICABLE) TO BE VERIFIED W/ELECT ENGINEER
10. REFRIGERATION RACK LOCATED ON ROOF SEE SHEET A4.01 FOR EXACT LOCATION
11. J-BOX STUB-UP +10" AND CONNECT TO EQUIPMENT – SEE DETAIL H/FS0.8.0
12. DISPOSER W/CONTROL PANEL SEE DETAIL D/FS0.8.0
13. NOT USED
14. CONDENSING RACK LOCATED ON ROOF SEE SHEET A4.01 FOR EXACT LOCATION
15. EXHAUST FAN AND LIGHT TO BE INTERLOCKED IN EMPLOYEE RESTROOM
16. ALL ELECTRICAL TO STUB INTO FLOOR BOXES "BUMPED UP" 3/8" MAX. AT 2 TO 1 SLOPE TO PROTECT FROM WATER
17. EXHAUST & M.U.A. FAN MUST BE INTERLOCKED SWITCH
18. CONDUIT WITH ELECTRICAL WIRING TO STUB-UP A.F.F., FLEX AND CONNECT TO EQUIPMENT AND/OR CO'S AS REQUIRED (MOUNT CO'S IN FIXTURE). ELECTRICAL WIRING TO BE SIZED FOR ALL INCOMING SERVICE BY THE ELECTRICAL ENGINEER. E.C. TO MAKE FINAL HOOK-UPS TO ALL APPLICABLE EQUIPMENT AND TO PROVIDE AND INSTALL CONTRACTOR TO MAKE FINAL HOOK-UPS TO ALL SWITCHES BREAKERS, STARTERS, CONDUIT, JUNCTION BOXES AND OUTLETS IN FIXTURE. FIXTURE FABRICATOR TO LOCATE ALL OUTLETS AND SWITCHES WHEN PART OF FIXTURE. INTERNAL WIRING TO BE PROVIDED AND INSTALLED BY THE E.C. IN ACCORDANCE WITH ALL LOCAL CODES. E.C. SHALL SEAL ALL ELECTRICAL PENETRATIONS THROUGH FLOORS, WATER-TIGHT AND VERMIN-PROOF. A MINIMUM OF 3 WIRES REQUIRED ON ALL 208 VOLT OR LARGER CIRCUITS. SEE FOOD SERVICE EQUIPMENT SCHEDULE FOR LOADED SCHEDULE; ELEVATIONS FOR CO'S LOCATIONS; AND ELECTRICAL NOTES FOR ADDITIONAL REQUIREMENTS. (DETAIL H/FS0.8.0)
19. NOT USED

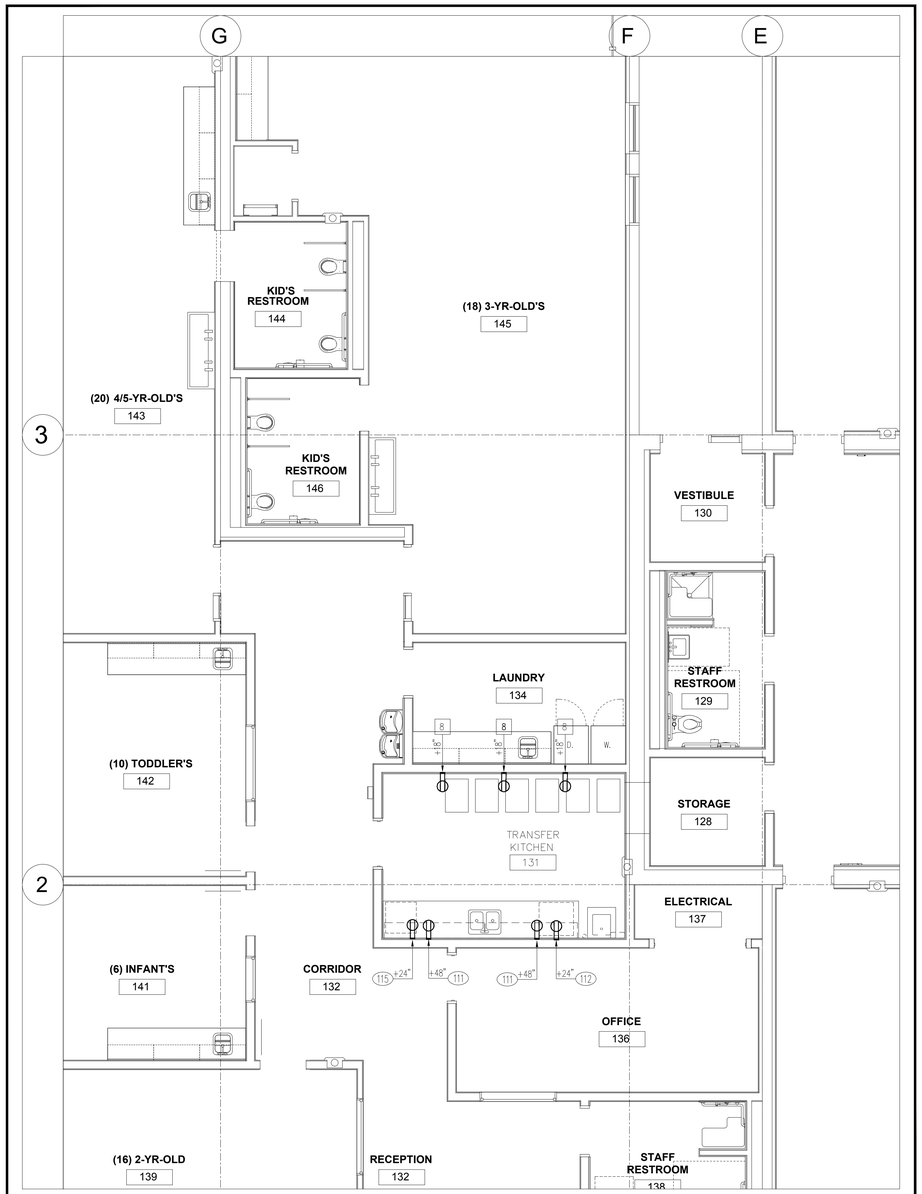

BID ALT "A" - TRANSFER KITCHEN ROOM 131 ELECTRICAL PLAN 1/4" = 1'-0"

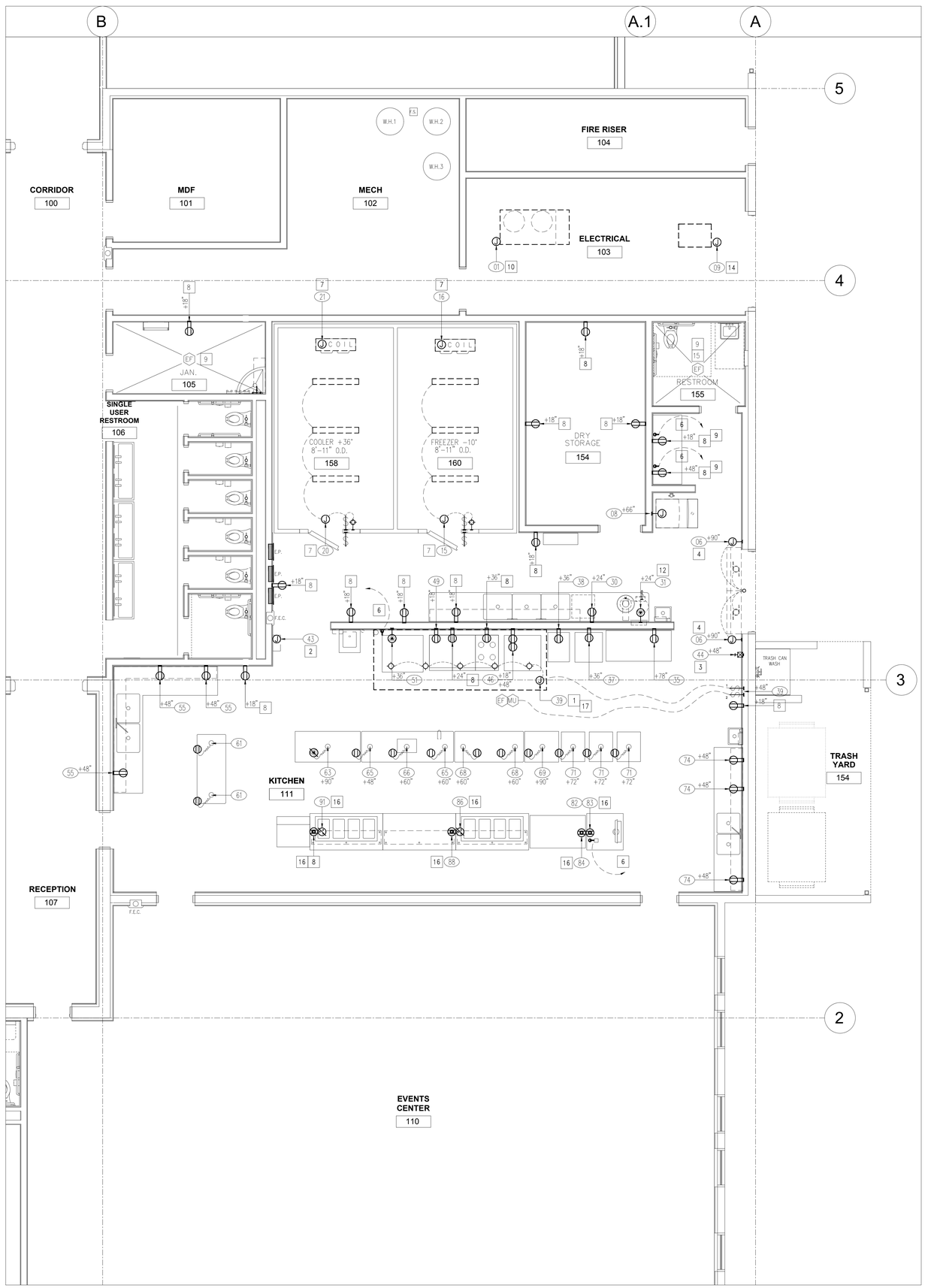

BASE BID - MAIN KITCHEN ROOM 111 FOODSERVICE EQUIPMENT ELECTRICAL PLAN 1/4" = 1'-0"

tsk
225 South Arlington Avenue
Reno NV, 89501
phone: 775.857.2949
fax: 775.857.2403
www.tska.com

THESE DRAWINGS AND SPECIFICATIONS ARE THE PROPERTY OF TATE SNYDER KIMSEY ARCHITECTS AND MAY NOT BE REPRODUCED OR USED FOR ANY PURPOSE WITHOUT THE ARCHITECTS WRITTEN CONSENT. AS INSTRUMENTS OF SERVICE, THESE DOCUMENTS ARE NOT FINAL AND READY FOR USE, AND THEREFORE NOT VALID, UNLESS THEY ARE SEALED, SIGNED AND DATED.

Copyright, Ltd 2022

Consultant

DIELI MURAWKA HOWE
A Division of WEBB FOODSERVICE DESIGN
Food Service Design Consultants
3020 Sungold Drive
Las Vegas, NV 89134
Phone: 619.602.4107
Design By:
RICHARD DIELI

PLEASE RECYCLE

Project

CITY OF FERNLEY
CRRC

Job No: 21-058.00

Owner

CITY OF FERNLEY

50% CONSTRUCTION DOCUMENTS

REVISIONS		
REV	DATE	DESCRIPTION

Sheet Title

FOODSERVICE EQUIPMENT ELECTRICAL PLAN

Date: MARCH 21, 2023

Sheet No:

FS0.4.0

BUILDING WORK LEGEND

- WALL BACKING (14 GA. G.I.)
- S/S WALL FLASHING
- EXHAUST DUCT CONNECTION
- MAKE-UP AIR DUCT CONNECTION
- EXHAUST HOOD OUTLINE
- DROP CORD SET, DOWN FROM CEILING
- SMOOTH AND LEVELED FLOOR AREA
- WALL OPENING (SLEEVE)
- WALL or WINDOW OPENING
- FLOOR DEPRESSION
- FIBERGLASS REINFORCED PLASTIC (F.R.P.)
- WALL RECESS FOR CONTROL CABINETS
- WALK-IN COOLER (SLAB-ON-GRADE)
- FLOOR DRAIN
- STEEL KICKBASE OUTLINE
- FLOOR SINK AT STEEL KICKBASE OUTLINE
- 1 KEYNOTE SYMBOL (SEE KEYNOTES AT LEFT)

BUILDING WORK KEYNOTES

1. WALL BACKING – HEIGHT AS INDICATED SEE DETAIL C/FS0.8.0
2. GALV CURB OUTLINE SEE DETAIL B/FS0.8.0
3. COUNTERTOP LINE AND/OR EQUIPMENT SEE ELEVATION SHEETS FS0.7.0 AND FS0.7.1
4. 9" FLOOR DEPRESSION @ INTERIOR WALK-IN BOX SEE DETAIL L/FS0.8.0
5. NOT USED
6. 6" FLOOR DEPRESSION @ FLOOR TROUGH SEE DETAIL W/FS0.8.1
7. CONDENSER'S RACK PLATFORM OUTLINE; SEE DETAIL _/FS.06.1 FOR SUGGESTED SIZE; SEE SHEET A4.01 FOR EXACT LOCATION
8. REFRIG. RACK'S PLATFORM ON ROOF (SEE SHEET FS.06.1) SEE SHEET A4.01 FOR EXACT LOCATION
9. STAINLESS STEEL END CAP, CORNER GUARD, AND WALL CAPS – SEE DETAIL N/FS0.8.1
10. S/S WALL FLASHING (FLOOR TO UNDERSIDE OF HOOD & UNDER-SIDE OF FINISHED CEILING WHERE NO HOOD; DETAIL P/FS0.8.0
11. F.R.P. (FIBERGLASS REINFORCED PANELS) FROM TOP OF COVE BASE TO FINISHED CEILING (SEE ARCH SPECS/DWGS)
12. FLOOR TO BE LEVEL AND SMOOTH FOR ROLL-IN UNITS
13. EPOXY FLOOR TO HAVE SMOOTH SURFACE UNDER ALL EQUIP, AND ALL WALKWAYS TO HAVE A LIGHT TEXTURE ONLY.
14. HOSE REEL CONTROL PANEL WALL RECESS SEE MANUFACTURER SPEC. SHEET
15. 10'-0" T-BAR CEILING HEIGHT TO BE PROVIDED IN THE MAIN KITCHEN – SEE ARCHITECT'S SHEET A3.01
16. PROVIDE A CEILING POCKET @ 104" HIGH FOR DELIVERY DOOR AIR CURTAIN
17. DROP CORD DOWN FROM CEILING
18. CERAMIC WALL TILE SEE INTERIORS/ARCHITECTURAL DRAWINGS
19. NOT USED
20. CEILING DIFFUSERS TO BE 4'-0" FROM ALL SIDES OF THE EXHAUST HOOD; SEE SHEET FS.10.0
21. TYPE 1 HOOD (ITEM 39) SEE SHEET FS.10.0 (1) 17"x10" EXH DUCT @ 2098 CFM @ 0.61 S.P. (2) 32"x 8" MUA DUCTS @ 629 CFM @ 0.20 S.P. (EA.)
22. NOT USED
23. 9'-0" T-BAR CEILING HEIGHT TO BE PROVIDED IN THE TRANSFER KITCHEN – SEE ARCH. SHEET A3.01A

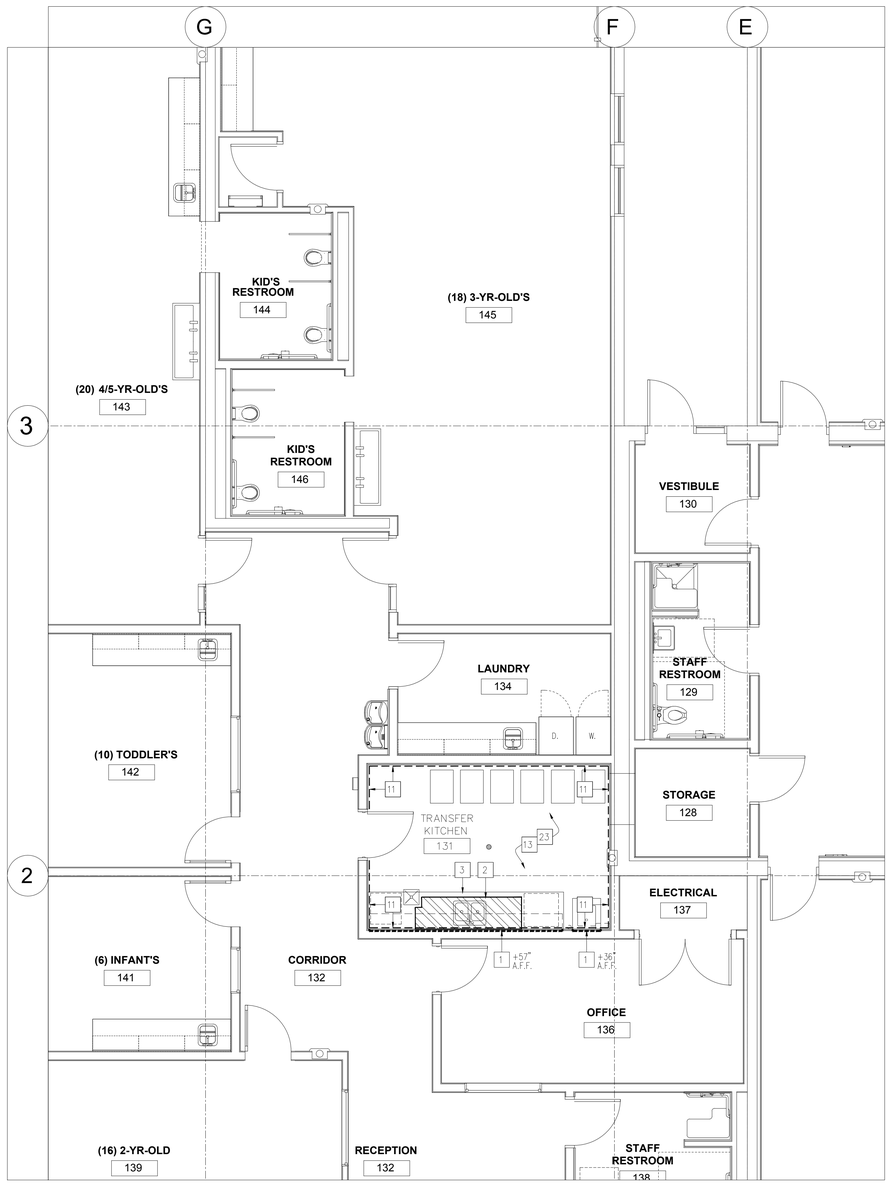

BID ALT "A" – TRANSFER KITCHEN ROOM 131 BUILDING WORK PLAN

1/4" = 1'-0"

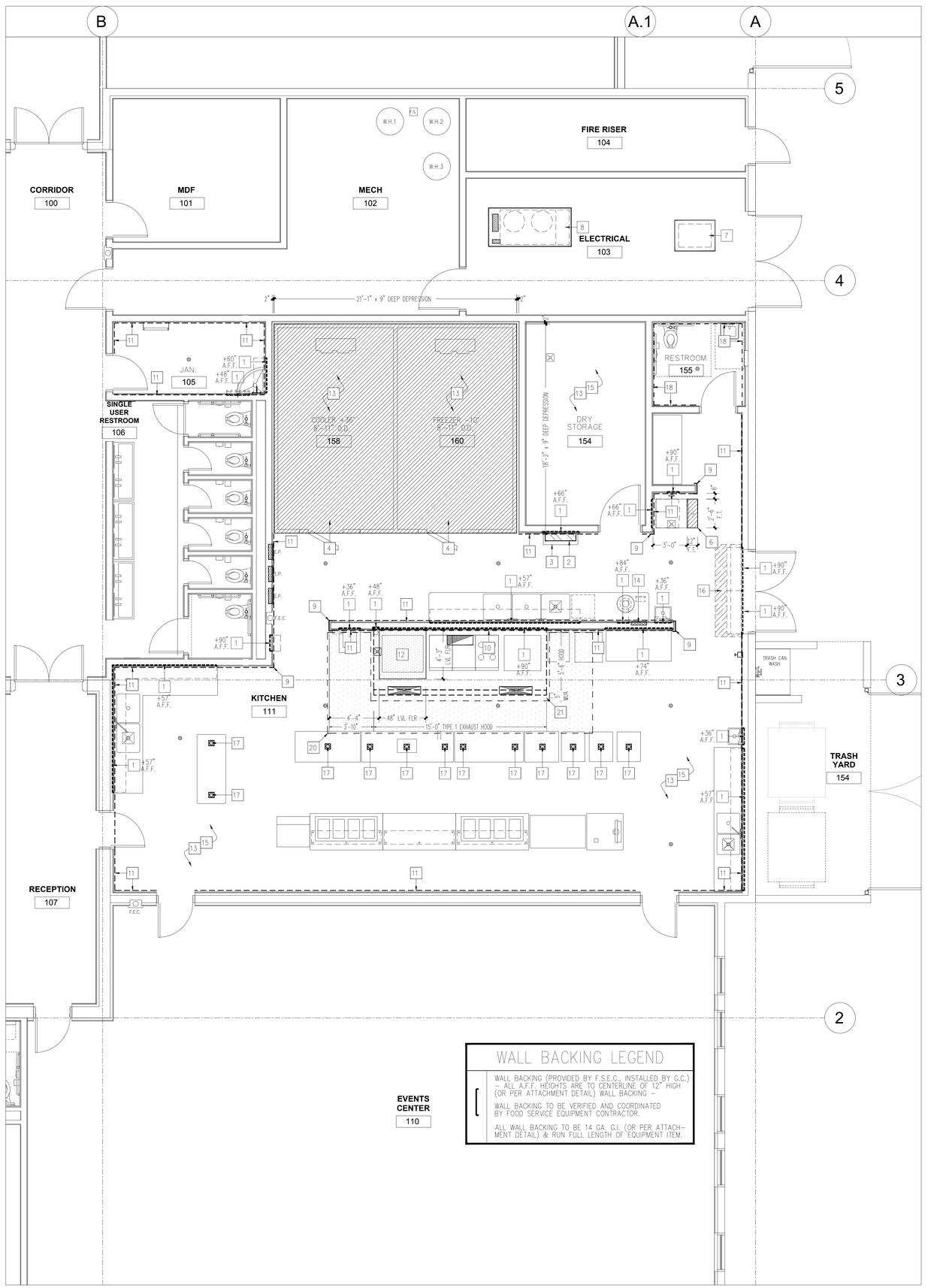

WALL BACKING LEGEND

WALL BACKING (PROVIDED BY F.S.E.C., INSTALLED BY G.C.) – ALL A.F.F. HEIGHTS ARE TO CENTERLINE OF 12" HIGH (OR PER ATTACHMENT DETAIL) WALL BACKING –

WALL BACKING TO BE VERIFIED AND COORDINATED BY FOOD SERVICE EQUIPMENT CONTRACTOR.

ALL WALL BACKING TO BE 14 GA. G.I. (OR PER ATTACHMENT DETAIL) & RUN FULL LENGTH OF EQUIPMENT ITEM.

BASE BID – MAIN KITCHEN ROOM 111 FOODSERVICE EQUIPMENT BUILDING WORK PLAN

1/4" = 1'-0"

tsk
225 South Arlington Avenue
Reno NV, 89501
phone: 775.857.2949
fax: 775.857.2403
www.tska.com

THESE DRAWINGS AND SPECIFICATIONS ARE THE PROPERTY OF TATE SNYDER KIMSEY ARCHITECTS AND MAY NOT BE REPRODUCED OR USED FOR ANY PURPOSE WITHOUT THE ARCHITECTS WRITTEN CONSENT. AS INSTRUMENTS OF SERVICE, THESE DOCUMENTS ARE NOT FINAL AND READY FOR USE, AND THEREFORE NOT VALID, UNLESS THEY ARE SEALED, SIGNED AND DATED.

Copyright, Ltd 2022

Consultant

DIELI MURAWKA HOWE
A Division of WEBB FOODSERVICE DESIGN
Food Service Design Consultants
3020 Sungold Drive
Las Vegas, NV 89134
Phone: 619.602.4107
Design By:
RICHARD DIELI

PLEASE RECYCLE

Project

CITY OF FERNLEY CRRC

Job No: 21-058.00

Owner

CITY OF FERNLEY

50% CONSTRUCTION DOCUMENTS

REVISIONS

REV	DATE	DESCRIPTION

Sheet Title

FOODSERVICE EQUIPMENT BUILDING WORK PLAN

Date: MARCH 21, 2023

Sheet No:

FS0.5.0

REFRIGERATION LEGEND

- CONDUIT FOR REFRIGERATION LINES (RUN UNDER FLOOR)
- REMOTE COMPRESSOR (ON REFRIGERATION RACK)
- A — REFRIGERATION SYSTEM (SEE SCHEDULE ON SHEET FS.06.1)
- REFRIGERATION LINE (RUN FROM REFRIGERATION RACK)
- REMOTE REFRIGERATED BASE AND/OR EQUIPMENT
- S/C — SELF-CONTAINED REFRIGERATED BASE AND/OR EQUIPMENT
- ACCESS PULL-BOX FOR REFRIG. LINES PROVIDED BY E.C. (IN THE WALL)
- 1 — ITEM NUMBER (SEE EQUIPMENT SCHEDULE)
- 1 — KEYNOTE SYMBOL (SEE KEYNOTES AT LEFT)

REFRIG PLAN KEYNOTES

1. REFRIGERATED EQUIPMENT AND/OR SYSTEM FOR ADDITIONAL INFO. SEE SHEET FS.06.1
2. PULL-BOX FOR REFRIGERATION LINES THRU WALL - SEE DETAIL M/FS0.8.0
3. REFRIGERATION LINES STUB-DOWN FROM CEILING THRU TO EVAP COIL - SEE DETAIL E/FS0.6.1
4. REFRIGERATION RACK FOR REMOTE COMPRESSORS LOCATED ON THE ROOF (SEE SHEET FS0.6.1)
5. OUTLINE OF ICE MAKER'S CONDENSER'S RACK; SEE SHEET A4.01 FOR EXACT LOCATION
6. REFRIGERATION RACK FOR REMOTE COMPRESSORS LOCATED ON THE ROOF (SEE SHEET FS.06.1) SEE SHEET A4.01 FOR EXACT LOCATION
7. REFRIGERATION LINES RUN ABOVE CEILING LINE (UNISTRUT TRAPEZE OR SIMILAR), EXTEND FROM REFRIGERATION RACK LOCATION ON ROOF TO DROP-DOWN POINT AT WALL.

NOTE: REFRIGERATION LINES ARE FOR GRAPHIC PURPOSES ONLY. IT IS NOT MEANT TO SHOW ROUTING.

NOTE:
SUCTION LINE TO SLOPE 1/2" PER 10'-0" MINIMUM TOWARDS COMPRESSOR ON HORIZONTAL RUNS.

NOTE:
SEE SHEET FS0.0.0 FOR REFRIGERATION NOTES AND OTHER APPLICABLE NOTES

NOTE:
ALL CONDUIT AND PULL BOXES WITH S/S COVERS TO BE SUPPLIED AND INSTALLED BY ELECT. CONTRACTOR & COORDINATED BY FOOD SERVICE EQUIPMENT CONTRACTOR

NOTE:
SEALED & PRESSURIZED WITH 350 LBS. OF NITROGEN FOR 48 HOUR PERIOD. REFRIG. CONTRACTOR TO USE GAUGE TO VERIFY.

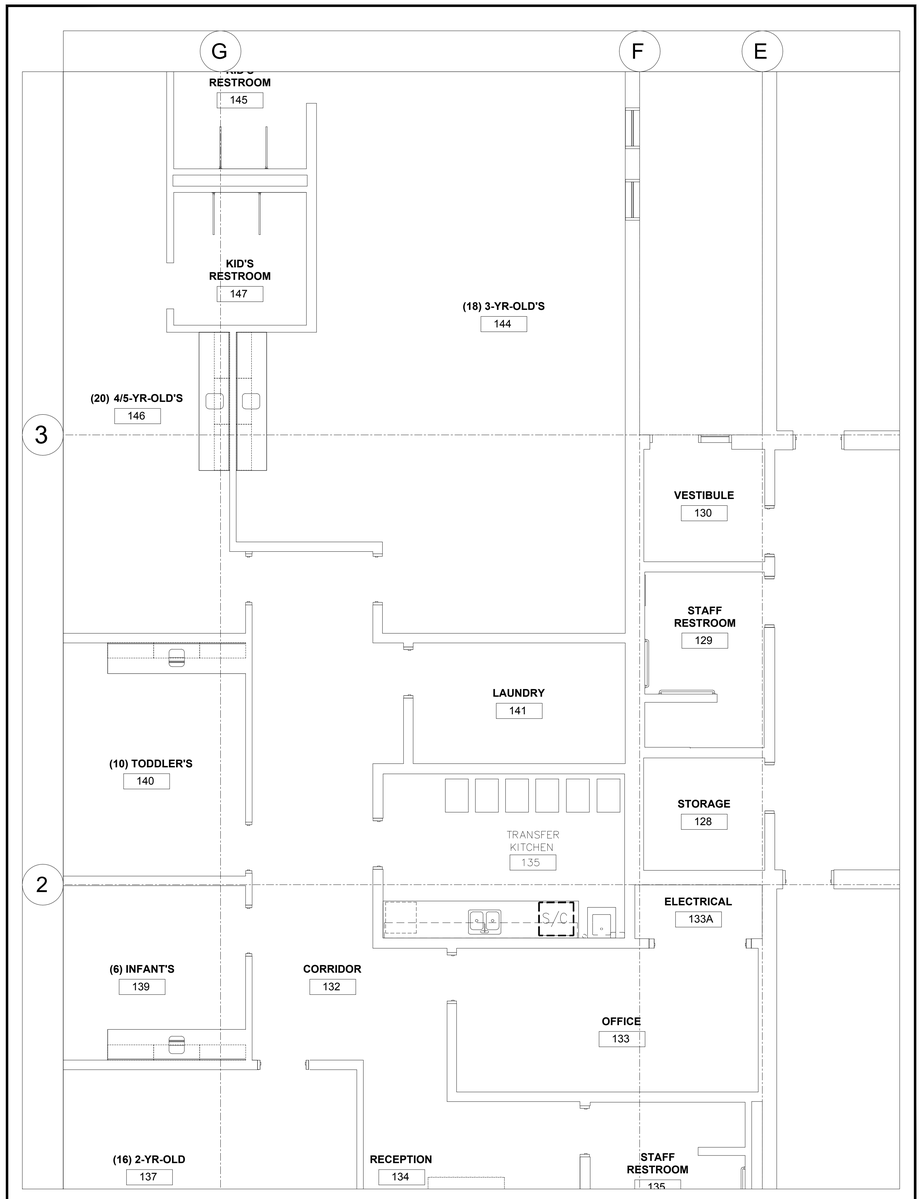

BID ALT "A" - TRANSFER KITCHEN ROOM 131 REFRIGERATION PLAN 1/4" = 1'-0"

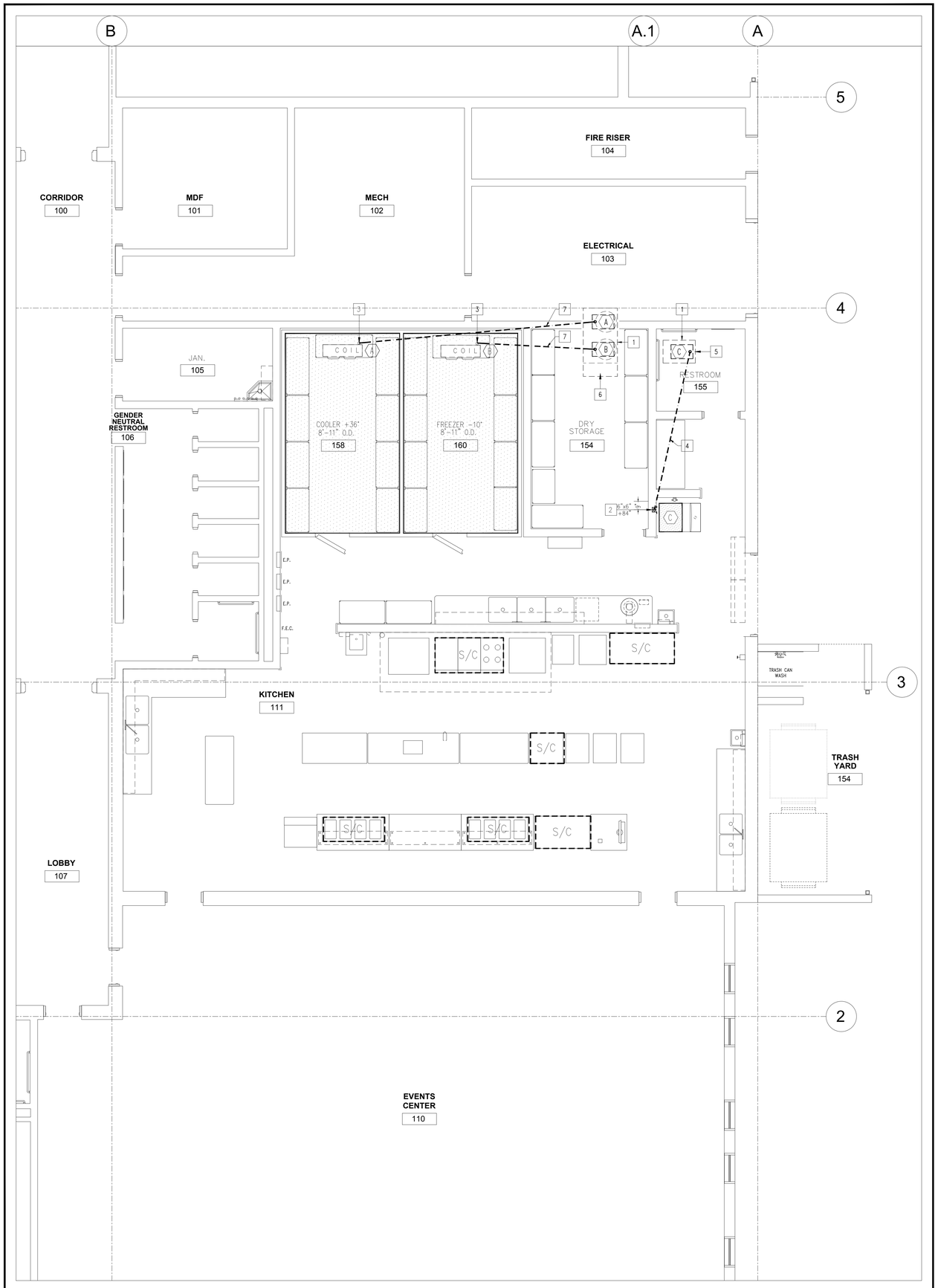

BASE BID - MAIN KITCHEN ROOM 111 FOODSERVICE EQUIPMENT REFRIGERATION PLAN 1/4" = 1'-0"

tsk
225 South Arlington Avenue
Reno NV, 89501
phone: 775.857.2949
fax: 775.857.2403
www.tska.com

THESE DRAWINGS AND SPECIFICATIONS ARE THE PROPERTY OF TATE SNYDER KIMSEY ARCHITECTS AND MAY NOT BE REPRODUCED OR USED FOR ANY PURPOSE WITHOUT THE ARCHITECTS WRITTEN CONSENT. AS INSTRUMENTS OF SERVICE, THESE DOCUMENTS ARE NOT FINAL AND READY FOR USE, AND THEREFORE NOT VALID, UNLESS THEY ARE SEALED, SIGNED AND DATED.

Copyright, Ltd 2022

Consultant

DIELI MURAWKA HOWE
A Division of WEBB FOODSERVICE DESIGN
Food Service Design Consultants
3020 Sungold Drive
Las Vegas, NV 89134
Phone: 619.602.4107
Design By:
RICHARD DIELI

PLEASE RECYCLE

Project

CITY OF FERNLEY CRRC

Job No: 21-058.00

Owner

CITY OF FERNLEY

50% CONSTRUCTION DOCUMENTS

REVISIONS		
REV	DATE	DESCRIPTION

Sheet Title

FOODSERVICE EQUIPMENT REFRIGERATION PLAN

Date: MARCH 21, 2023

Sheet No:

FS0.6.0

ColdZone
DRAWING NUMBER
21969

c UL us MEA

NOTES:
1. UNIT WEIGHT IS 635 LBS.
2. INSTALLATION CLEARANCE REQUIRES 3 FT ON ALL SIDES

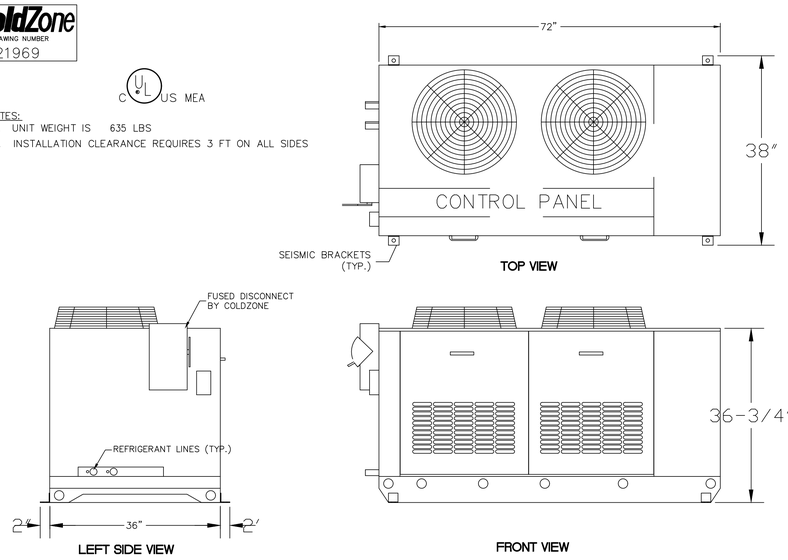

A | ITEM #1 - REFRIGERATION RACK MODEL "MPL-2CZ" ENVIRO-THERM - OUTLINE DRAWING

N.T.S.

COLDZONE ENGINEERING SUMMARY															POWER SUPPLY: 208-230V/3PH/60HZ							FUSE SIZE: 50 AMPS									
															CONNECTED LOAD: 34.1 AMPS							MINIMUM AMPACITY: 38.4 AMPS									
IDENT		FIXTURES				COMPRESSORS						EVAPORATOR COILS										LINE SIZES			ACCESSORIES						
SYSTEM	ITEM	DESCRIPTION	FIXT.*F		REFRIG. R-	MODEL NO.	H.P.	ELECTRICAL CHARACTERISTIC AT 60 HZ			MBH. AT 90°F	DEFROST *	QUANTITY	MODEL NO.	MFR.	FAN 1PH		HEATER			TOTAL UNIT AMP [RLA]	ROUTE +	SUCTION	LIQUID	DEFROST OPTION NO.	CRANKCASE HEATER	HEAD PRESS. CTRL.	FURNISHED BY (SEE CODE)			
			FIXT.	SUCT.				RLA	V	PH					REMARKS	AMP	V	AMP	V	PH								TSTAT	SOLVAL	TXVAL
A	21	W/I COOLER #20	35	25	448A	ZS13KAE	1.8	8.7	208	3	13.3	T	1	CL6A130ADARE	COLDZONE	1.6	115				8.7	S	7/8	1/2	ECONET	FI	FI	FI	FI	FI	FI
B	16	W/I FREEZER #15	-10	-20	448A	ZF15K4E	5.0	17.0	208	3	15.9	E	1	CL6E162DDARE	COLDZONE	2.0	208	14.3	208	1	17.0	S	1 3/8	1/2	ECONET	FI	FI	FI	FI	FI	FI
MINI PAK RACK		(2) CONDENSER FAN MOTORS					3/4	3.4	208	3											6.8										
SYSTEM ITEM NO: 1		LEGEND	*	T-AIR E-ELECTRIC G-GRAVITY(W/TIMER) O-OFF-CYCLE E^-DEFROST CLOCK BY FIXTURE MFR								+		S-SINGLE M-MAIN B-BRANCH						VERIFY LINE SIZES WITH JOB SITE CONDITIONS				MFR- FURNISH WITH FIXTURE FI- CZ TO FURNISH AND SHIP LOOSE FI- CZ TO FURNISH AND INSTALL ON UNIT RC- FURNISH AND INSTALL BY REF. CONTRACTOR								

NOTES:
- EcoNet®COMMAND CENTER SHIPPED LOOSE FOR FIELD INSTALLATION (PART #HETST700SYS)
- EACH SYSTEM SUPPLIED WITH HEATED AND INSULATED RECEIVER
- EACH COMPRESSOR SYSTEM IS SUPPLIED WITH A CRANKCASE HEATER AND HEAD PRESSURE CONTROL
- LOW TEMPERATURE SYSTEMS ARE SUPPLIED WITH SUCTION-LINE ACCUMULATOR
- REFRIGERATION SYSTEM INCLUDES A MAIN-FUSED DISCONNECT SWITCH
- ALL EVAPORATOR COILS WILL REQUIRE POWER FROM A HOUSE CIRCUIT
- EVAPORATOR FAN MOTORS ARE PROVIDED WITH HIGH EFFICIENCY EC MOTORS
- LIQUID LINE KIT WITH SEALED FILTER/DRIER AND SIGHT GLASS WITH MOISTURE INDICATOR
- ALL COMPRESSORS AND CONDENSER CIRCUITS ARE SIZED TO OPERATE AT 90°F AMBIENT
- PIPE SIZES ARE BASED ON A MAXIMUM LINE RUN OF 100 EQUIVALENT FEET (INCLUDES 45 FT. RISER)

B | CONDENSATE LINE + EVAP COIL ATTACHMENT DETAIL

N.T.S.

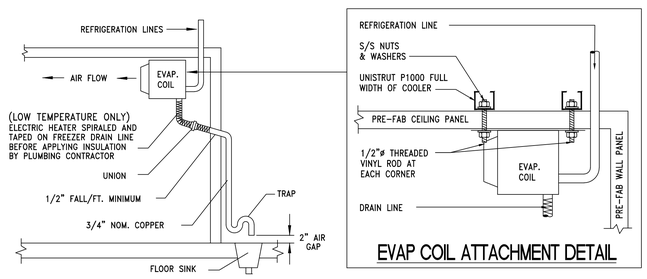

C | COLDZONE ENGINEERING SUMMARY FOR ITEM 9

N.T.S.

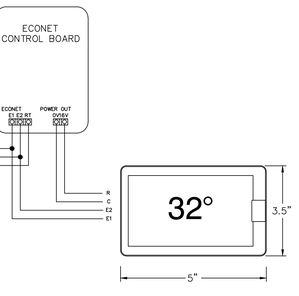

TERMINAL	FUNCTION
R	POWER - 24 VAC or 9-21 VDC
C	COMMON/GROUND - 24 VAC
E1	ECONET COMMUNICATIONS BUS WIRE 1
E2	ECONET COMMUNICATIONS BUS WIRE 2

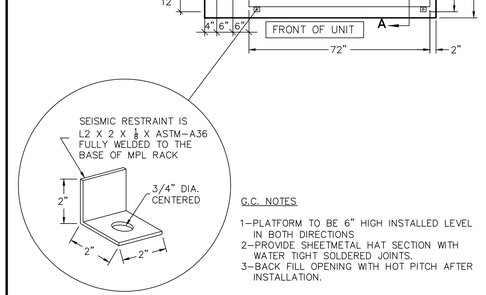

G.C. NOTES

1-PLATFORM TO BE 6" HIGH INSTALLED LEVEL IN BOTH DIRECTIONS
2-PROVIDE SHEETMETAL HAT SECTION WITH WATER TIGHT SOLDERED JOINTS.
3-BACK FILL OPENING WITH HOT PITCH AFTER INSTALLATION.

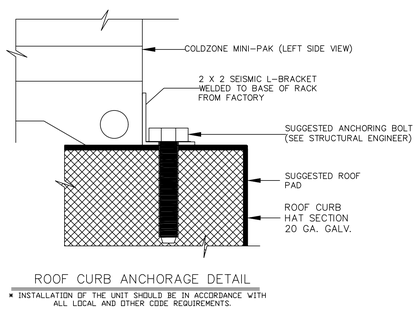

* INSTALLATION OF THE UNIT SHOULD BE IN ACCORDANCE WITH ALL LOCAL AND OTHER CODE REQUIREMENTS.

F | SUGGESTED ROOF PAD DETAIL

N.T.S.

EVAPORATOR COIL(S) INCHES							
SYSTEM	ITEM NO.	MODEL NO.	QTY.	NO. OF FANS	A	W	WEIGHT (LBS. EACH)
A	21	CL6A130ADARE	1	2	33 1/4	43 5/8	62
B	16	CL6E162DDARE	1	4	65 1/4	76 5/8	124

NOTE: REFRIGERATION LINES SHOULD BE SEALED AND PRESSURIZED WITH 350 LBS. OF NITROGEN FOR 48 HOUR PERIOD. REFRIG. CONTRACTOR TO USE GAUGE TO VERIFY.

NOTE: SEE SHEET FS0.0.0 FOR REFRIGERATION NOTES AND OTHER APPLICABLE NOTES



c UL us

D | COLDZONE EVAPORATOR COIL - LOW PROFILE

N.T.S.

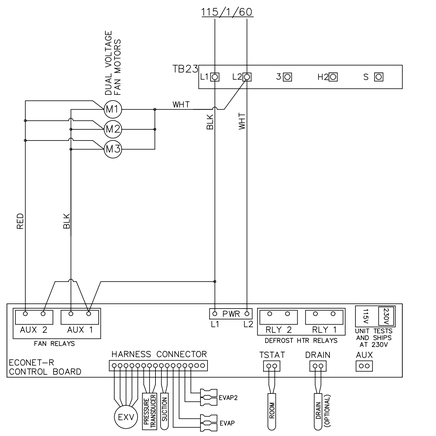

NOTES:
1. USE COPPER CONDUCTORS ONLY
2. UNIT MUST BE GROUNDED
3. FOR MOTOR AND HEATER AMPS SEE RATING STICKER ON OUTSIDE OF UNIT.
4. JUMPERS ARE 16 GA. UNLESS OTHERWISE SPECIFIED.

LEGEND:
TB - TERMINAL BOARD
HTR - HEATER
HS - HEATER SAFETY
M1 - MOTOR #1, ETC.
EXV - ELECTRONIC EXPANSION VALVE
R1 - RELAY

FACTORY WIRING
FIELD WIRING

G | AIR DEFROST WIRING DIAGRAM - ECONET

N.T.S.

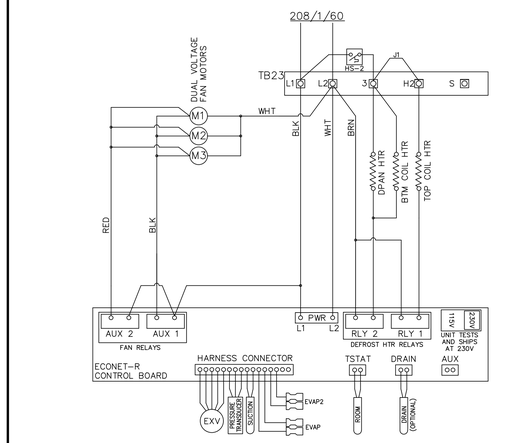

NOTES:
1. USE COPPER CONDUCTORS ONLY
2. UNIT MUST BE GROUNDED
3. FOR MOTOR AND HEATER AMPS SEE RATING STICKER ON OUTSIDE OF UNIT.
4. JUMPERS ARE 16 GA. UNLESS OTHERWISE SPECIFIED.

LEGEND:
TB - TERMINAL BOARD
HTR - HEATER
HS - HEATER SAFETY
M1 - MOTOR #1, ETC.
EXV - ELECTRONIC EXPANSION VALVE
R1 - RELAY

FACTORY WIRING
FIELD WIRING

H | ELECTRIC DEFROST WIRING DIAGRAM - ECONET

N.T.S.

E | ECONET COMMAND CENTER CONTROLLER COMMUNICATIONS WIRING

N.T.S.

ENGINEERING GUIDE TO SPECIFICATION FOR REMOTE REFRIGERATION PACKAGE ENVIRO-THERM REMOTE SYSTEM

THE REFRIGERATION PACKAGE SHALL BE A PRE-ENGINEERED AND FACTORY ASSEMBLED UNIT, TRADE NAME "EVIRO-THERM", AS MANUFACTURED BY COLDZONE, A DIVISION OF HEAT TRANSFER PRODUCTS GROUP, 1933 VINEYARD AVE. ONTARIO, CA 91761. PHONE: (909) 786-3656, FAX: (714) 529-8503.

DEALER SHALL FURNISH AND INSTALL, WHERE SHOWN ON PLANS, (1) COLDZONE U.L. APPROVED "ENVIRO-THERM" AIR-COOLED REMOTE REFRIGERATION PACKAGE

1. ENCLOSURE
THE FRAME SHALL BE MADE OF STRUCTURAL STEEL AND THE ENCLOSURE AND PANELS SHALL BE MADE OF HEAVY GAUGE CARBON STEEL. ENTIRE FRAME SHALL BE PRE-ASSEMBLED, WELDED, CLEANED AND PAINTED WITH A PRIME COAT OF ZINC CHROMATE AND SHALL BE FINISHED WITH A COAT OF EPOXY BASED "ENVIRO-KOTE".

2. REFRIGERATION UNIT (ENVIRO-THERM)
A. THE ENVIRO-THERM REFRIGERATION UNIT SHALL BE PROVIDED WITH SINGLE STAGE HERMETIC SCROLL COPPELAND COMPRESSORS, MULTI-CIRCUITED AIR-COOLED CONDENSER OPERATING WITHIN THE RECOMMENDED RANGE OF SUCTION AND DISCHARGE PRESSURE FOR WALK-IN COOLERS, FREEZERS & REFRIGERATED FIXTURES. EACH CIRCUIT OF THE MULTI-CIRCUIT CONDENSER SHALL BE SIZED FOR MINIMUM OF 20° F.T.D.
B. EACH COMPRESSOR UNIT SHALL BE EQUIPPED WITH COPELAND COMPRESSOR, LARGE PUMP DOWN CAPACITY RECEIVER WITH TWO SHUTOFF VALVES, LIQUID LINE DRIER, SIGHT GLASS, SUCTION AND DIS- CHARGE VIBRATION ELIMINATOR, HIGH-LOW PRESSURE CONTROL, CRANKCASE HEATER AND FLOOD BACK HEAD PRESSURE CONTROL FOR LOW AMBIENT - ALL FACTORY ASSEMBLED.
C. ALL COMPRESSOR UNITS SHALL BE NEW AND FACTORY ASSEMBLED TO OPERATE WITH THE REFRIGERANT SPECIFIED IN THE REFRIGERATION ENGINEERING SUMMARY SHEET.

3. PRE-PIPING
A. ALL TUBING SHALL BE SECURELY SUPPORTED AND ANCHORED WITH CLAMPS.
B. ALL REFRIGERANT LINES SHALL BE EXTENDED TO ONE SIDE OF THE PACKAGE IN A NEAT AND ORDERLY MANNER.
C. ENDS OF LINES SHALL BE CAPPED AGAINST CONTAMINATION AFTER THE UNIT IS COMPLETED. THESE CAPPED ENDS ARE TO BE OPENED ONLY AT FINAL CONNECTION OF THE PACKAGE TO FIXTURES.

4. CONTROL PANEL
A. THE PACKAGE SHALL HAVE FACTORY MOUNTED AND PRE-WIRED CONTROL PANEL COMPLETE WITH INTERLOCKED MAIN FUSED DISCONNECT, COMPRESSOR CIRCUIT BREAKERS, CONTACTORS AND TIME CLOCKS WIRED FOR SINGLE POINT POWER CONNECTION.
B. ELECTRICAL CONTRACTOR SHALL PROVIDE AND INSTALL MAIN POWER LINES TO PANEL, AND USE WIREHARNESS WIRING FOR CONTROL AND DEFROST HEATER BETWEEN THE DEFROST CLOCK AND THE REFRIGERATION FIXTURES, ALL IN ACCORDANCE WITH THE WIRING DIAGRAM AND LOCAL CODES.

GENERAL NOTES

1. GENERAL CONTRACTOR
A. CONTRACTORS SHALL VERIFY ALL DIMENSIONS AND COORDINATE WITH OTHER TRADES.
B. GENERAL CONTRACTOR SHALL PREPARE AND WEATHERPROOFING THE PLATFORM AND CURBED OPENINGS.

2. REFRIGERATION CONTRACTOR
A. THE COMPLETE SYSTEM SHALL BE EVACUATED WITH VACUUM PUMP.
B. ALL COPPER TUBING TO BE REFRIGERANT GRADE A.C.R. OR TYPE "L".
C. CHARGE, TEST, AND ADJUST EACH UNIT TO BE IN AN OPERATIONAL SYSTEM.
D. SILVER SOLDER AND/OR SIL-FOS SHALL BE USED FOR ALL REFRIGERANT PIPING. SOFT SOLDER IS NOT
E. ALL PIPING TO BE PRESSURE TESTED WITH NITROGEN AT 300 PSI. AFTER THE CONDENSING UNIT AND COIL HAVE BEEN CONNECTED, THE BALANCE OF THE SYSTEM SHALL BE LEAK TESTED WITH ALL VALVES OPEN.
F. REFRIGERATION CONTRACTOR TO PROVIDE AND INSTALL DRAIN LINE HEATER IN FREEZER TO BE CONNECTED BY ELECTRICAL CONTRACTOR

3. ELECTRICAL CONTRACTOR
A. ELECTRICAL CONTRACTOR TO PROVIDE POWER FROM REFRIGERATION PACKAGE AND CONNECT CONTROL AND DEFROST SYSTEM AS CALLED FOR IN THE WIRING DIAGRAM.
B. ELECTRICAL CONTRACTOR TO PROVIDE COLOR CODED SERVICE FROM TIME CLOCK AT THE REFRIGERATION PACKAGE TO THE EVAPORATOR IN THE FIXTURE FOR DEFROST.
C. ALL ELECTRICAL WIRING AND INSTALLATION SHALL BE IN ACCORDANCE WITH THE WIRING DIAGRAM AND LOCAL CODES.

4. PLUMBING CONTRACTOR
A. PLUMBING CONTRACTOR TO PROVIDE HARD A.C.R. OR TYPE "L" COPPER DRAIN LINES FOR WALK-IN REFRIGERATOR AND FREEZER, PITCHED 1/4" PER FOOT OF RUN. IN FREEZER, UNHEATED DRAIN LINE MUST BE OUTSIDE OF FREEZER WALL TO PREVENT FREEZING. TRAP DRAIN LINE OUTSIDE OF REFRIGERATED SPACE TO AVOID ENTRANCE OF WARM AND MOIST AIR.
B. PLUMBING CONTRACTOR TO PROVIDE INDIVIDUAL DRAIN LINE FOR EACH EVAPORATOR UNLESS OTHERWISE CALLED FOR.
C. ALL PLUMBING INSTALLATION SHALL BE IN ACCORDANCE WITH LOCAL CODES.

J | COLDZONE REFRIGERATION RACK NOTES

N.T.S.

tsk
225 South Arlington Avenue
Reno NV, 89501
phone: 775.857.2949
fax: 775.857.2403
www.tska.com

THESE DRAWINGS AND SPECIFICATIONS ARE THE PROPERTY OF TATE SNYDER KIMSEY ARCHITECTS AND MAY NOT BE REPRODUCED OR USED FOR ANY PURPOSE WITHOUT THE ARCHITECTS WRITTEN CONSENT. AS INSTRUMENTS OF SERVICE, THESE DOCUMENTS ARE NOT FINAL AND READY FOR USE, AND THEREFORE NOT VALID, UNLESS THEY ARE SEALED, SIGNED AND DATED.

Copyright, Ltd 2022

Consultant

DIELI MURAWKA HOWE
A Division of WEBB FOODSERVICE DESIGN
Food Service Design Consultants
3020 Sungold Drive
Las Vegas, NV 89134
Phone: 619.602.4107
Design By:
RICHARD DIELI

PLEASE RECYCLE

Project
CITY OF FERNLEY
CRRC

Job No: 21-058.00

Owner
CITY OF FERNLEY

50% CONSTRUCTION DOCUMENTS

REVISIONS		
REV	DATE	DESCRIPTION

Sheet Title
FOODSERVICE EQUIPMENT REFRIGERATION RACK DETAILS

Date: MARCH 21, 2023

Sheet No:
FS0.6.1

A | ACCESSIBLE HAND SINK DETAILS — NTS

ACCESSIBLE HAND SINK REQUIREMENT NOTES

1. WATER AND DRAIN PIPES UNDER ACCESSIBLE HAND SINKS SHALL BE INSULATED OR OTHERWISE COVERED. THERE SHALL BE NO SHARP OR ABRASIVE OBJECTS OR SURFACES UNDER HAND SINKS.
2. FAUCET CONTROLS AND OPERATING MECHANISMS SHALL BE OPERABLE WITH ONE HAND AND SHALL NOT REQUIRE TIGHT GRASPING, PINCHING OR TWISTING OF THE WRIST. THE FORCE REQUIRED TO ACTIVATE CONTROLS SHALL BE NO GREATER THAN 5 LBF. LEVER-OPERATED, PUSH-TYPE AND ELECTRONICALLY CONTROLLED MECHANISMS ARE EXAMPLES OF ACCEPTABLE DESIGNS. SELF-CLOSING VALVES ARE ALLOWED IF THE FAUCET REMAINS OPEN FOR AT LEAST 10 SECONDS.
3. WHERE TOWEL, SANITARY NAPKINS, WASTE RECEPTACLES, SOAP DISPENSER AND OTHER SIMILAR DISPENSING AND DISPOSAL FIXTURES ARE PROVIDED, AT LEAST ONE OF EACH TYPE SHALL BE LOCATED WITHIN ALL OPERABLE PARTS WITHIN 40 INCHES FROM THE FINISHED FLOOR.
4. ALL DIMENSIONS SHOWN ARE MINIMUM CLEARANCES, UNLESS NOTED.
5. AREA BELOW HAND SINKS SHALL BE ACCESSIBLE AND CLEAR.

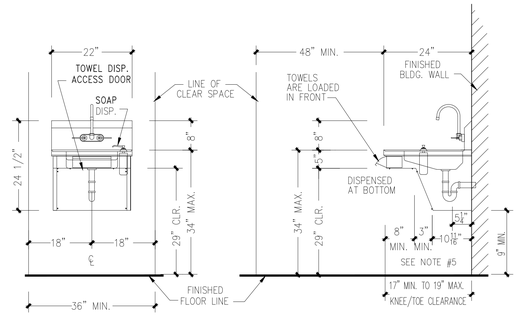

FRONT VIEW — SIDE VIEW

B | GALVANIZED CURB FOR COUNTER DETAIL — NTS

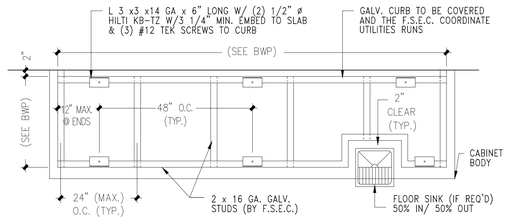

PLAN VIEW

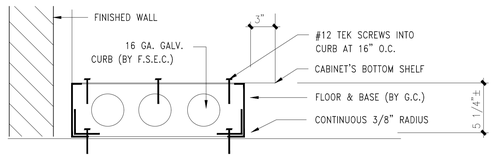

SECTION

NOTE #2: INSTALL BORIC ACID PER LOCAL CODES.

NOTE #1: ON ALL FRAMED PLATFORMS IN FOODSERVICE AREAS, THE F.S.E.C. TO PROVIDE MIN. 1/2" OF BORIC ACID IN AIR SPACES TO PREVENT INSECT NESTING.

C | WALL BACKING DETAIL — NTS

NOTE: NOTATIONS WITH: SEE PLAN, SEE ELECT. PLAN, SEE BWP, SEE ELEV., REFERENCE TO THESE FOODSERVICE EQUIPMENT TO THESE FOODSERVICE EQUIPMENT DRAWINGS ONLY. (SEE LIST ON FS0.0.0)

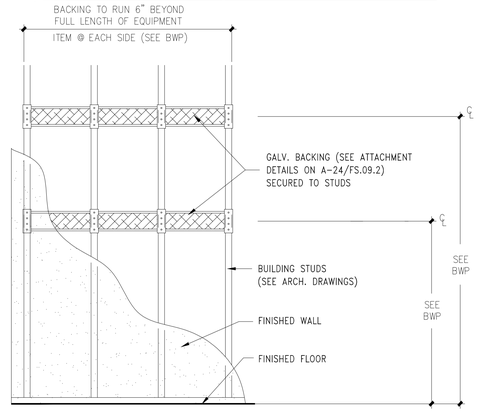

NOTE: WALL-BACKING TO BE VERIFIED AND COORDINATED BY THE F.S.E.C.

D | DISPOSER INSTALLATION DETAIL — NTS

NOTE: DETAILS SHOWN ON SHEETS FS0.8.0 AND FS0.8.1 ARE THE RESPONSIBILITY OF THE SHEET-METAL FABRICATOR AND INDICATE TYPICAL FABRICATION INFORMATION ONLY. FOR RESTRAINT ANCHORAGE INFO, SEE DETAILS ON SHEETS FS0.9.0 AND FS0.9.1

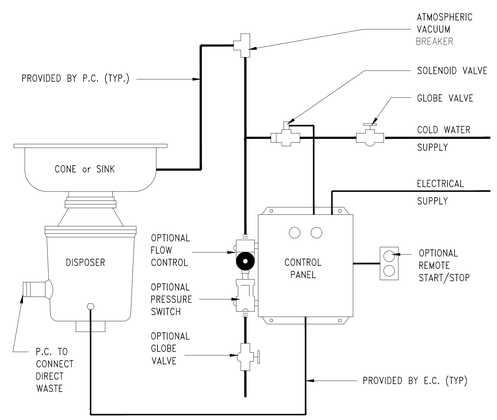

E | POT SINK/GREASE INTERCEPTOR DETAIL — NTS

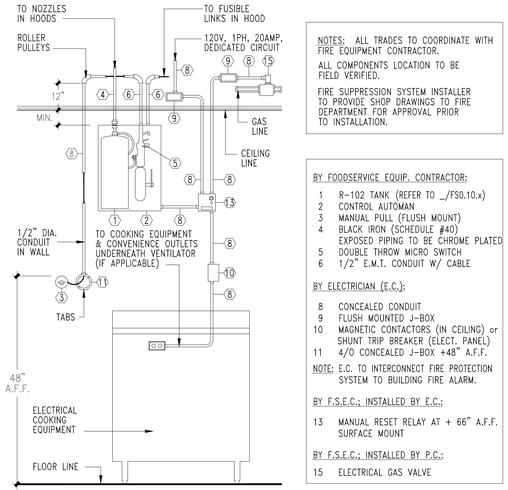

GREASE INTERCEPTOR INSTALLED BELOW FLOOR SURFACE

NOTE:
ALL PIPES MUST BE MIN. 6 INCHES OFF THE FLOOR IF GREASE TRAP UNIT IS LOCATED ABOVE THE FLOOR THEN THE UNIT MUST BE 6 INCHES MIN. AWAY FROM ALL WALLS.
(SEE SHEET FS0.0.0, FOOD FACILITY REQUIREMENTS NOTES, PLUMBING NOTES #24 & #31)

F | WALL MOUNTED HOSE REEL DETAIL — NTS

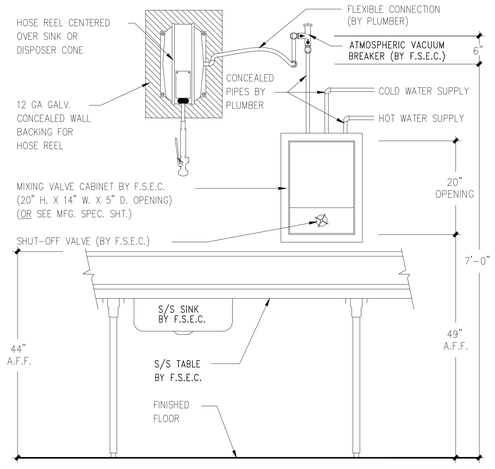

G | WALL MTD AIR CURTAIN'S MICRO-SWITCH DET. — NTS

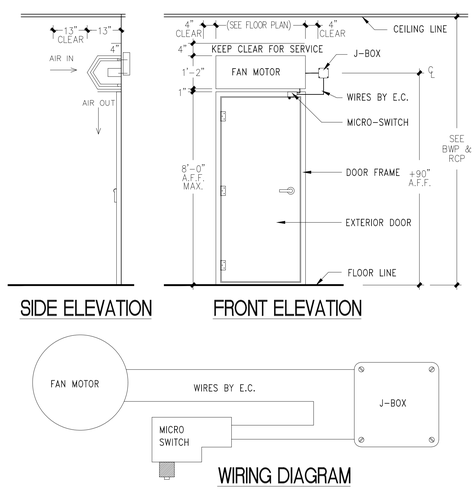

H | ELECTRICAL CONDUIT STUB-UP DETAIL — NTS

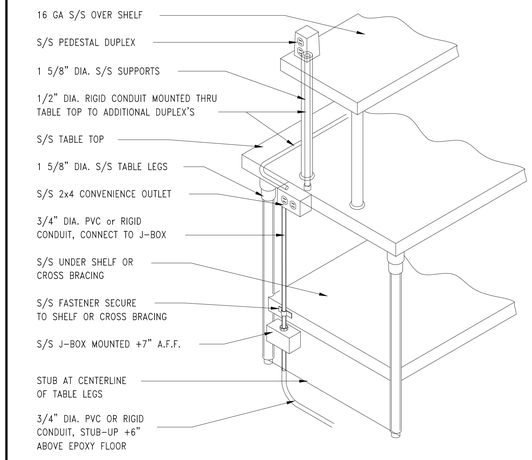

J | FIRE SUPPRESSION SYSTEM (ELECT) DETAIL — NTS

NOTES: ALL TRADES TO COORDINATE WITH FIRE EQUIPMENT CONTRACTOR.
ALL COMPONENTS LOCATION TO BE FIELD VERIFIED.
FIRE SUPPRESSION SYSTEM INSTALLER TO PROVIDE SHOP DRAWINGS TO FIRE DEPARTMENT FOR APPROVAL PRIOR TO INSTALLATION.

BY FOODSERVICE EQUIP. CONTRACTOR:

1 R-102 TANK (REFER TO _/FS0.10.x)
2 CONTROL AUTOMAN
3 MANUAL PULL (FLUSH MOUNT)
4 BLACK IRON (SCHEDULE #40) EXPOSED PIPING TO BE CHROME PLATED
5 DOUBLE THROW MICRO SWITCH
6 1/2" E.M.T. CONDUIT W/ CABLE

BY ELECTRICIAN (E.C.):

8 CONCEALED CONDUIT
9 FLUSH MOUNTED J-BOX
10 MAGNETIC CONTACTORS (IN CEILING) or SHUNT TRIP BREAKER (ELECT. PANEL)
11 4/0 CONCEALED J-BOX +48" A.F.F.

NOTE: E.C. TO INTERCONNECT FIRE PROTECTION SYSTEM TO BUILDING FIRE ALARM.

BY F.S.E.C.; INSTALLED BY E.C.:

13 MANUAL RESET RELAY AT + 66" A.F.F. SURFACE MOUNT

BY F.S.E.C.; INSTALLED BY P.C.:

15 ELECTRICAL GAS VALVE

K | TYPICAL INTERIOR W.I. BOX WIRING DETAIL — NTS

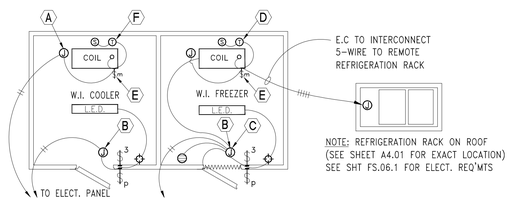

NOTE: REFRIGERATION RACK ON ROOF (SEE SHEET A4.01 FOR EXACT LOCATION) SEE SHT FS.06.1 FOR ELECT. REQ'MTS

NOTE: ELECTRICAL CONTRACTOR (E.C.) TO WIRE FROM ROUGH-IN POINTS A, B, C, D, E & F TO ALL COMPONENTS OF WALK-IN ASSEMBLIES, INCLUDING COMPRESSORS, TO MAKE A COMPLETE & OPERABLE REFRIGERATION SYSTEM, E.C. TO MAKE PENETRATIONS FROM ROUGH-IN LOCATIONS TO INTERIOR WALK-IN BOX AND PROVIDE PROPER SEALING OF SAME PENETRATIONS (VERIFY SPECIFIC REQUIREMENTS WITH GENERAL CONTRACTOR). SEAL CONDUIT AFTER ALL WIRES ARE PULLED.

ELECTRICAL CONTRACTOR TO PROVIDE:

- (A) 120 VOLT/1 PHASE FOR COIL, SOLENOID AND THERMOSTAT.
- (B) 120 VOLT/1 PHASE FOR LIGHTS THRU SWITCHES-MOUNT LIGHTS IF SHIPPED LOOSE.
- (C) 120 VOLT/1 PHASE FOR FREEZER DOOR HEATER, CONDENSATE LINE HEAT TRACE AND HEATED VACUUM VENT.
- (D) 208 VOLT/1 PH FOR COIL, COIL HEATER, SOLENOID, AND THERMOSTAT. ALSO, 5-WIRE TO DEFROST TIMER AT REMOTE COMPRESSOR.
- (E) MOTOR RATED DISCONNECT BY E.C. (AS REQUIRED BY LOCAL CODES).
- (F) E.C. TO PROVIDE 120 VOLT/1 PHASE FOR SOLENOID AND THERMOSTAT.

NOTE: NO EXPOSED ELECTRICAL CONDUIT RUNS INSIDE WALK-IN BOX.

NOTE: E.C. TO WIRE THRU TO ALL THREE AND FOUR WAY SWITCHES PER ELECTRICAL ENGINEER'S PLANS AND SPECIFICATIONS.

L | WALK-IN FLOOR 9" DEEP DEPRESSION DET. — NTS

NOTE: SEE SHEET FS0.8.1 FOR REFERENCE DETAILS APPLICABLE TO DETAILS ON THIS SHEET

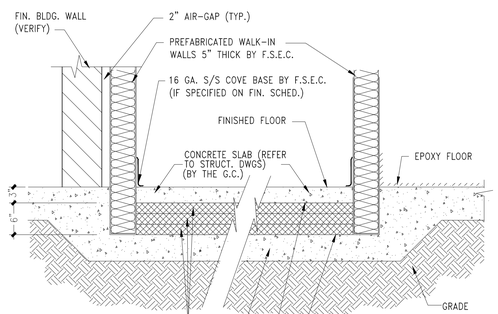

NOTE: THE WALK-IN COOLER MUST HAVE A FLOOR THAT IS GRADED, SO THAT IT DRAINS TO THE OUTSIDE THROUGH A WASTE PIPE OR DOORWAY.

M | REFRIGERATION CONDUIT / PULL BOX DETAIL — NTS

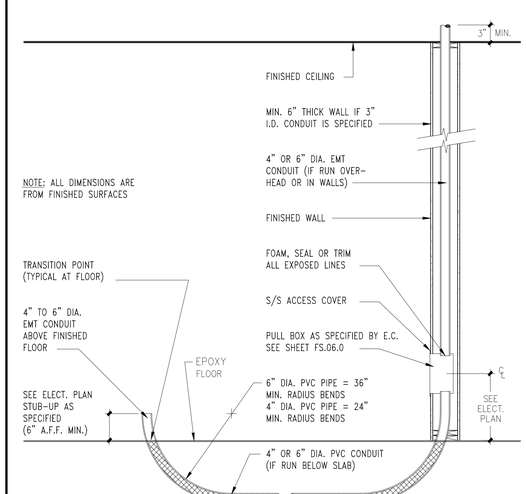

tsk
225 South Arlington Avenue
Reno NV, 89501
phone: 775.857.2949
fax: 775.857.2403
www.tska.com

THESE DRAWINGS AND SPECIFICATIONS ARE THE PROPERTY OF TATE SNYDER KIMSEY ARCHITECTS AND MAY NOT BE REPRODUCED OR USED FOR ANY PURPOSE WITHOUT THE ARCHITECTS WRITTEN CONSENT. AS INSTRUMENTS OF SERVICE, THESE DOCUMENTS ARE NOT FINAL AND READY FOR USE, AND THEREFORE NOT VALID, UNLESS THEY ARE SEALED, SIGNED AND DATED.

Copyright, Ltd 2022

Consultant

DIELI MURAWKA HOWE
A Division of WEBB FOODSERVICE DESIGN
Food Service Design Consultants — Phone: 619.602.4107
3020 Sungold Drive — Design By:
Las Vegas, NV 89134 — RICHARD DIELI

PLEASE RECYCLE

Project

CITY OF FERNLEY CRRC

Job No: 21-058.00

Owner

CITY OF FERNLEY

50% CONSTRUCTION DOCUMENTS

REVISIONS		
REV	DATE	DESCRIPTION

Sheet Title

FOODSERVICE EQUIPMENT DETAILS

Date: MARCH 21, 2023

Sheet No:

FS0.8.0

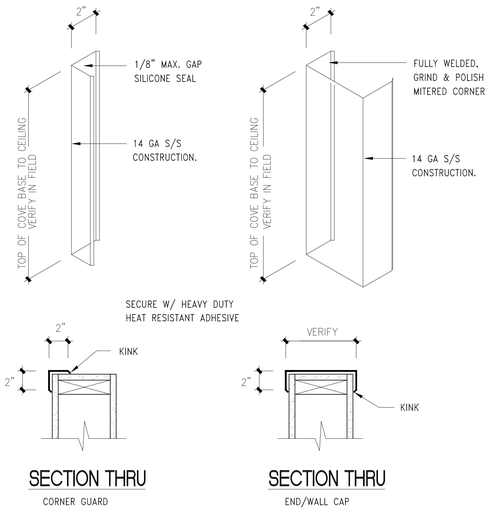

N | S/S CORNER GUARD/END CAP/WALL CAP NTS

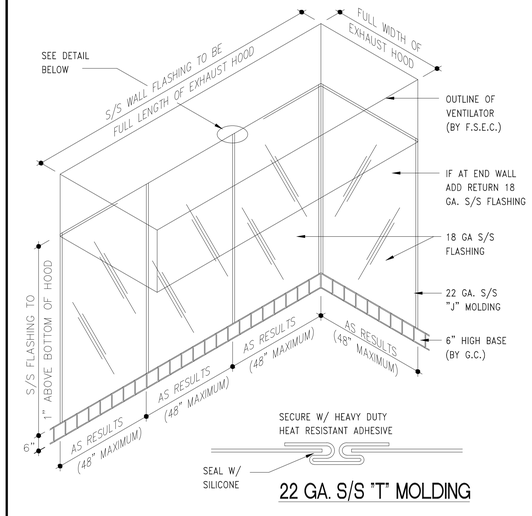

P | 18 GA. S/S WALL FLASHING DETAIL NTS

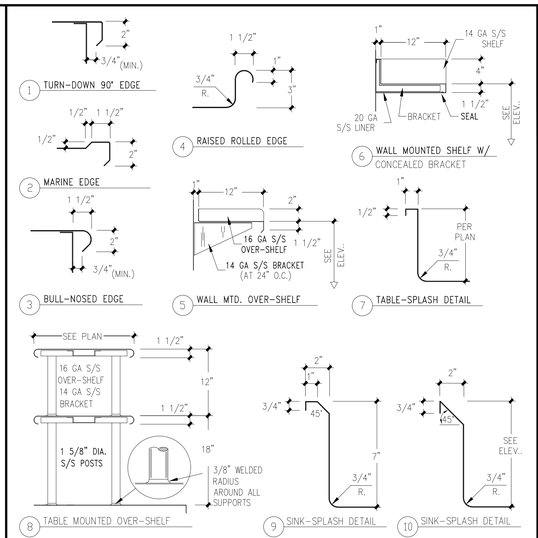

Q | EDGE / SPLASH / OVER-SHELF DETAILS NTS

NOTES:
1. BUILD TO NSF STANDARDS
2. NO TRIM ALLOWED, 1/8" MAX. TOLERANCE
3. SOUND DEADEN TOPS

NOTE: PITCH DRAIN-BOARD TO 1/8" PER LIN. FT.

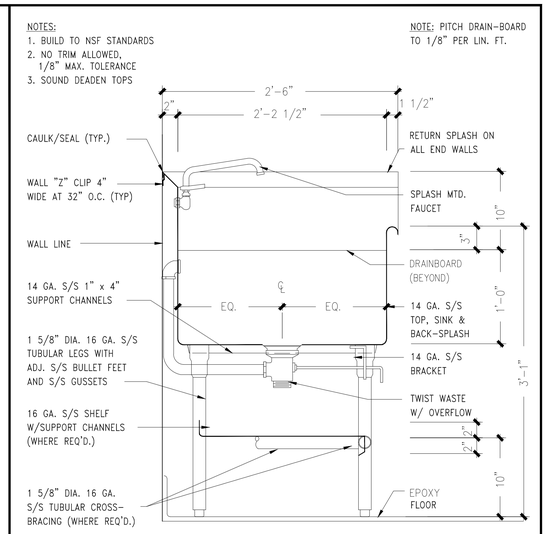

R | SINK W/RAISED ROLLED EDGE SECTION 1 1/2"=1'-0"

NOTES:
1. BUILD TO NSF STANDARDS
2. NO TRIM ALLOWED, 1/8" MAX. TOLERANCE
3. SOUND DEADEN TOPS

NOTE: PITCH DRAIN-BOARD TO 1/8" PER LIN. FT.

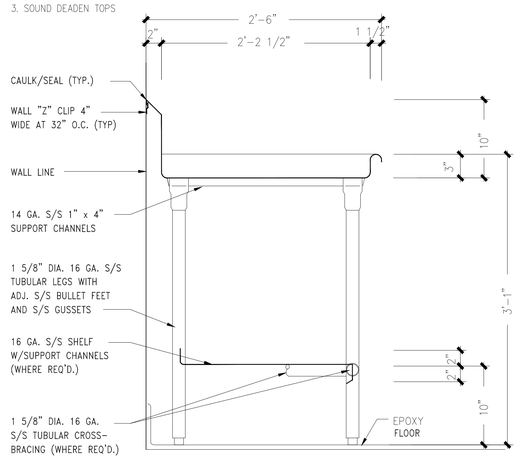

S | CLEAN DISH-TABLE SECTION 1 1/2"=1'-0"

NOTES:
1. BUILD TO NSF STANDARDS
2. NO TRIM ALLOWED, 1/8" MAX. TOLERANCE
3. SOUND DEADEN TOPS

NOTE: PITCH DRAIN-BOARD TO 1/8" PER LIN. FT.

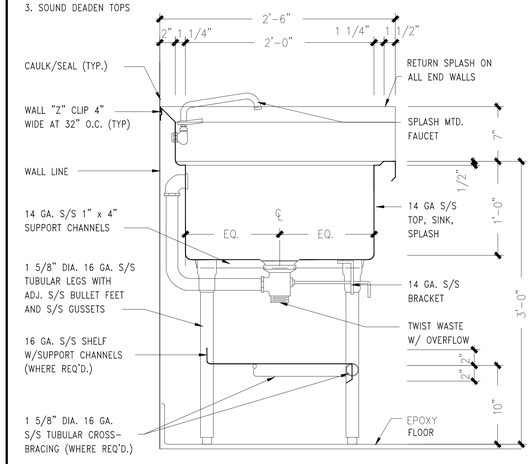

T | PREP SINK W/MARINE EDGE SECTION 1 1/2"=1'-0"

NOTES:
1. BUILD TO NSF STANDARDS
2. NO TRIM ALLOWED, 1/8" MAX. TOLERANCE
3. SOUND DEADEN TOPS

NOTE: PITCH DRAIN-BOARD TO 1/8" PER LIN. FT.

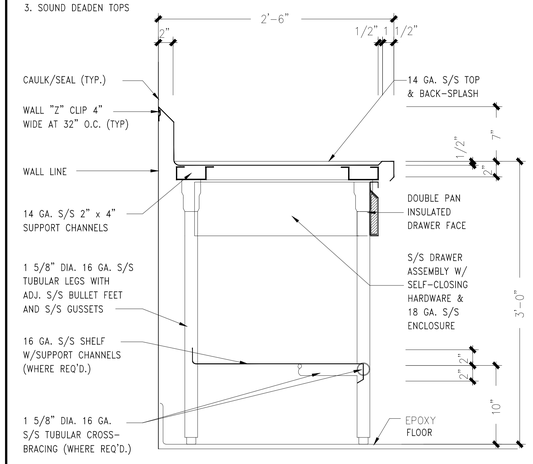

U | PREP TABLE W/MARINE EDGE SECTION 1 1/2"=1'-0"

NOTES:
1. BUILD TO NSF STANDARDS
2. SOUND DEADEN TOPS

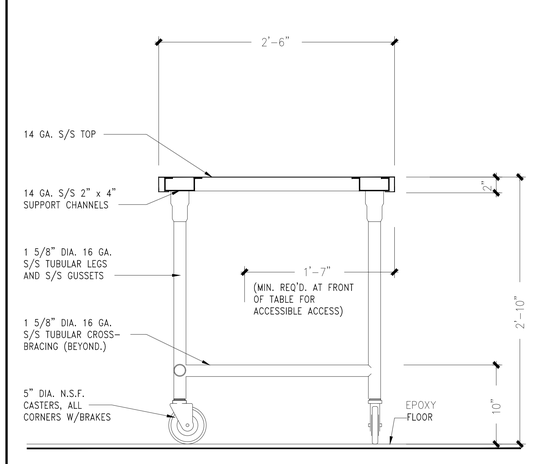

V | MOBILE ACCESSIBLE TABLE SECTION 1 1/2"=1'-0"

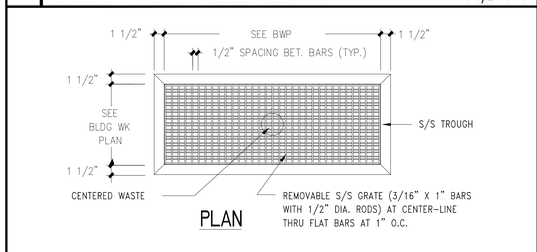

W | FLOOR TROUGH W/SUBWAY GRATE DETAIL NTS

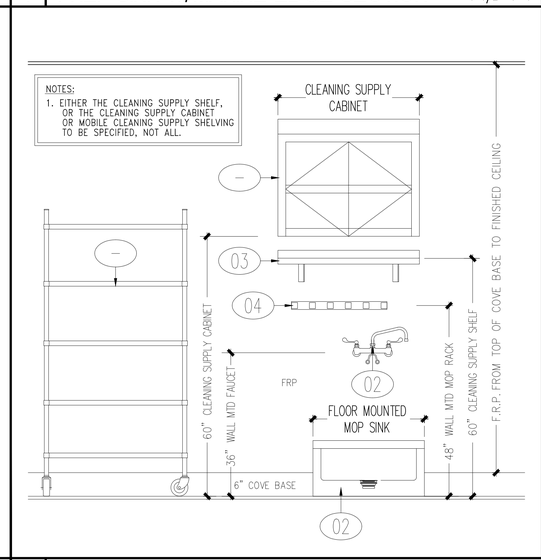

X | ELEVATION of TYP JANITOR'S EQUIPMENT NTS

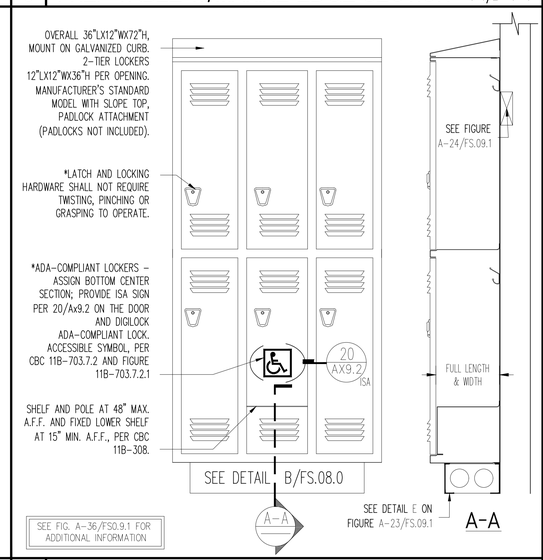

Y | ACCESSIBLE LOCKER DETAIL NTS

NOTES:
1. BUILD TO NSF STANDARDS
2. SOUND DEADEN TOPS

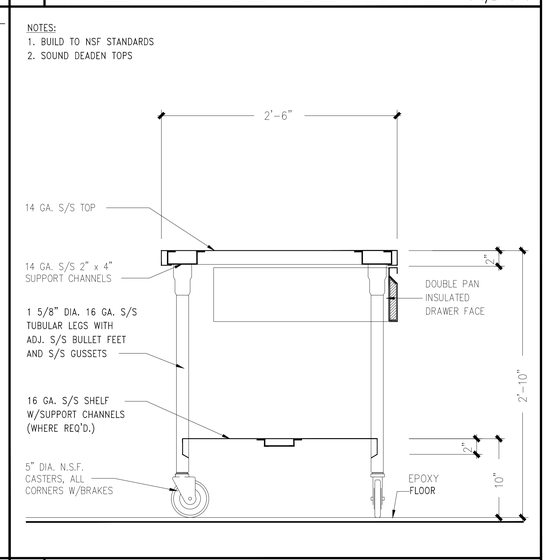

Z | MOBILE TABLE SECTION 1 1/2"=1'-0"

tsk
225 South Arlington Avenue
Reno NV, 89501
phone: 775.857.2949
fax: 775.857.2403
www.tska.com

THESE DRAWINGS AND SPECIFICATIONS ARE THE PROPERTY OF TATE SNYDER KIMSEY ARCHITECTS AND MAY NOT BE REPRODUCED OR USED FOR ANY PURPOSE WITHOUT THE ARCHITECTS WRITTEN CONSENT. AS INSTRUMENTS OF SERVICE, THESE DOCUMENTS ARE NOT FINAL AND READY FOR USE, AND THEREFORE NOT VALID, UNLESS THEY ARE SEALED, SIGNED AND DATED.
Copyright, Ltd 2022

Consultant

DIELI MURAWKA HOWE
A Division of WEBB FOODSERVICE DESIGN
Food Service Design Consultants
3020 Sungold Drive
Las Vegas, NV 89134
Phone: 619.602.4107
Design By:
RICHARD DIELI

PLEASE RECYCLE

Project
CITY OF FERNLEY CRRC

Job No: 21-058.00

Owner
CITY OF FERNLEY

50% CONSTRUCTION DOCUMENTS

REVISIONS		
REV	DATE	DESCRIPTION

Sheet Title
FOODSERVICE EQUIPMENT DETAILS

Date: MARCH 21, 2023
Sheet No:
FS0.8.1

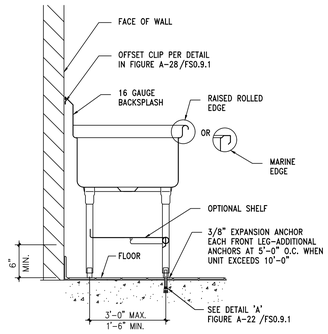

MAXIMUM WEIGHT = 250 lbs. PER LIN. FT.

NOTE: THE DETAILS SHOWN OF JOINTS AND SEAMS ARE GRAPHIC REPRESENTATIONS ONLY AND ARE NOT INTENDED TO INDICATE SPACING BETWEEN THE METAL ELEMENTS.

A-2 | WALL ATTACHED SINK, TABLE w/WALL CLIP | NTS

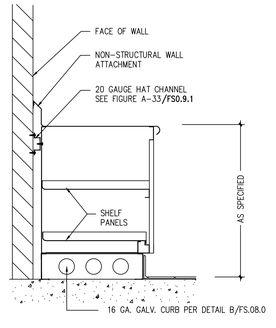

MAXIMUM WEIGHT = 250 lbs. PER LIN. FT.

NOTE: THE DETAILS SHOWN OF JOINTS AND SEAMS ARE GRAPHIC REPRESENTATIONS ONLY AND ARE NOT INTENDED TO INDICATE SPACING BETWEEN THE METAL ELEMENTS.

A-4 | ENCLOSED CABINET | NTS

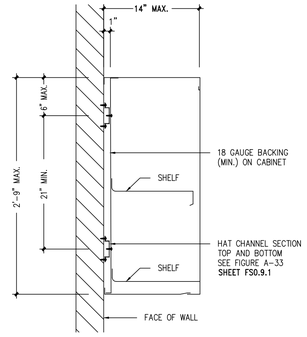

MAXIMUM WEIGHT = 100 lbs. PER LIN. FT.

NOTE: THE DETAILS SHOWN OF JOINTS AND SEAMS ARE GRAPHIC REPRESENTATIONS ONLY AND ARE NOT INTENDED TO INDICATE SPACING BETWEEN THE METAL ELEMENTS.

A-6 | WALL MOUNTED CABINET | NTS

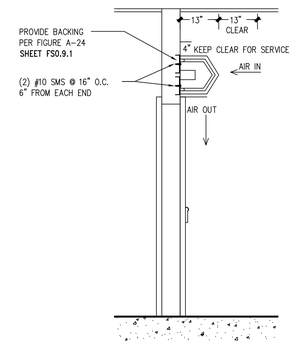

CONNECTIONS TO STEEL

A-6a | WALL MOUNTED AIR CURTAIN | NTS

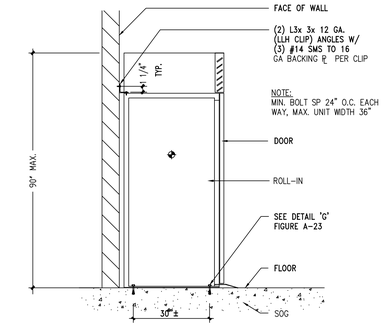

MAXIMUM WEIGHT = 700 lbs.

NOTE: THE DETAILS SHOWN OF JOINTS AND SEAMS ARE GRAPHIC REPRESENTATIONS ONLY AND ARE NOT INTENDED TO INDICATE SPACING BETWEEN THE METAL ELEMENTS.

A-9 | ROLL-IN FLOOR MOUNTED APPLIANCES | NTS

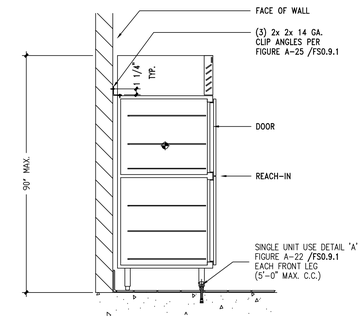

LEG MOUNTED UNIT

MAXIMUM WEIGHT = 500 lbs. PER LIN. FT. (INCL. CONTENTS)

NOTE: THE DETAILS SHOWN OF JOINTS AND SEAMS ARE GRAPHIC REPRESENTATIONS ONLY AND ARE NOT INTENDED TO INDICATE SPACING BETWEEN THE METAL ELEMENTS.

A-10 | FLOOR MOUNTED APPLIANCE AGAINST WALL | NTS

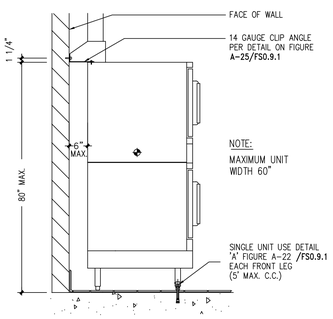

LEG MOUNTED UNIT

MAXIMUM WEIGHT = 500 lbs. PER LIN. FT. (INCL. CONTENTS)

NOTE: THE DETAILS SHOWN OF JOINTS AND SEAMS ARE GRAPHIC REPRESENTATIONS ONLY AND ARE NOT INTENDED TO INDICATE SPACING BETWEEN THE METAL ELEMENTS.

A-11 | FLOOR MOUNTED APPLIANCE AGAINST WALL | NTS

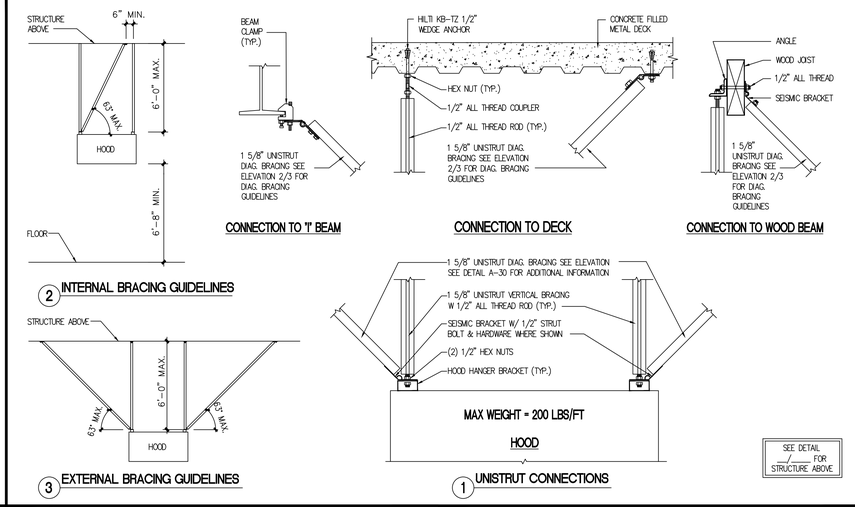

A-13 | EXHAUST HOOD BRACING - UNISTRUT CONNECTIONS | NTS

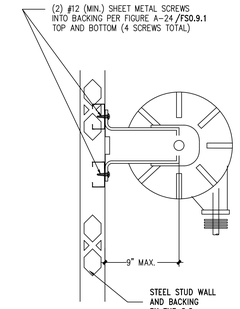

CONNECTIONS TO STEEL

A-16 | WALL MOUNTED HOSE REEL | NTS

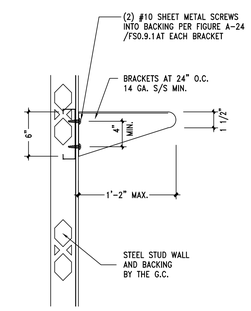

CONNECTIONS TO STEEL

MAX. WT. = 50 lbs. PER LIN. FT.

A-17 | WALL MOUNTED SHELVES | NTS

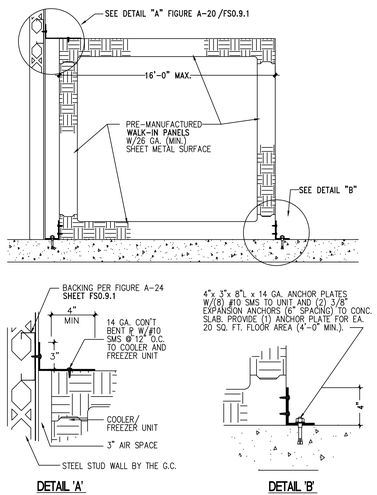

A-20 | WALK-IN BOX at METAL WALL-SLAB ON GRADE | NTS

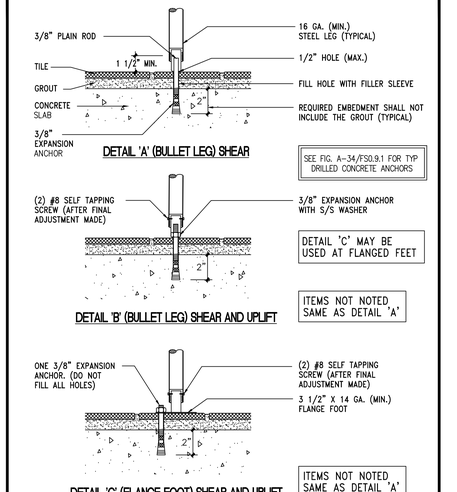

A-22 | FOOT DETAILS | NTS

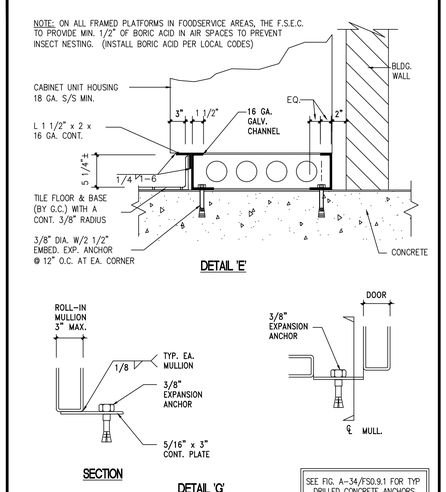

A-23 | BASE ATTACHMENTS | NTS

tsk
225 South Arlington Avenue
Reno NV, 89501
phone: 775.857.2949
fax: 775.857.2403
www.tska.com

THESE DRAWINGS AND SPECIFICATIONS ARE THE PROPERTY OF TATE SNYDER KIMSEY ARCHITECTS AND MAY NOT BE REPRODUCED OR USED FOR ANY PURPOSE WITHOUT THE ARCHITECTS WRITTEN CONSENT. AS INSTRUMENTS OF SERVICE, THESE DOCUMENTS ARE NOT FINAL AND READY FOR USE, AND THEREFORE NOT VALID, UNLESS THEY ARE SEALED, SIGNED AND DATED.

Copyright, Ltd 2022

Consultant

DIELI MURAWKA HOWE
A Division of WEBB FOODSERVICE DESIGN
Food Service Design Consultants
3020 Sungold Drive
Las Vegas, NV 89134
Phone: 619.602.4107
Design By:
RICHARD DIELI

PLEASE RECYCLE

Project

CITY OF FERNLEY
CRRC

Job No: 21-058.00

Owner

CITY OF FERNLEY

50% CONSTRUCTION DOCUMENTS

REVISIONS		
REV	DATE	DESCRIPTION

NOTE: SEE SHEET FS0.9.1 FOR REFERENCE DETAILS APPLICABLE TO DETAILS ON THIS SHEET

NOTE: SEE SHEET FS0.0.0 FOR ATTACHMENT RESTRAINT NOTES AND OTHER APPLICABLE NOTES

NOTE: DETAILS SHOWN ON THIS SHEET ARE FOR ATTACHMENT ONLY . . .FOR SHEETMETAL CONSTRUCTION AND INFORMATION, SEE DETAILS ON SHEETS FS0.8.0 AND FS0.8.1

Sheet Title

FOODSERVICE EQUIPMENT ATTACHMENT DETAILS

Date: MARCH 21, 2023

Sheet No:

FS0.9.0

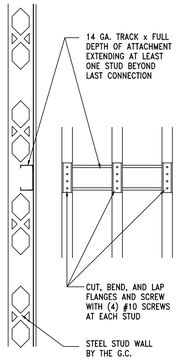

CONNECTIONS TO STEEL

A-24 | WALL SUPPORT BACKING NTS

NOTE: SEE SHEET FS0.9.0 FOR REFERENCE DETAILS APPLICABLE TO DETAILS ON THIS SHEET

NOTE: SEE SHEET FS0.0.0 FOR ATTACHMENT RESTRAINT NOTES AND OTHER APPLICABLE NOTES

NOTE: DETAILS SHOWN ON THIS SHEET ARE FOR ATTACHMENT ONLY . . .FOR SHEETMETAL CONSTRUCTION AND INFORMATION, SEE DETAILS ON SHEETS FS0.8.0 AND FS0.8.1

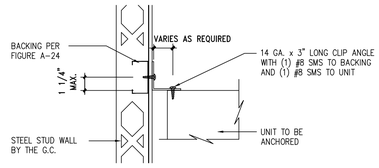

CONNECTIONS TO STEEL

A-25 | TOP ANGLE CONNECTION (STEEL WALL) NTS

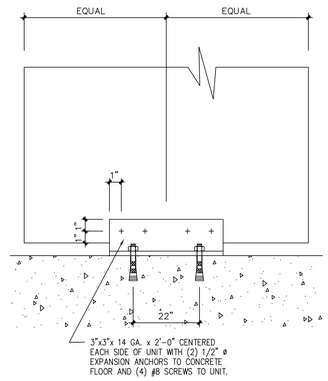

SEE FIG. A-34/FS0.9.1 FOR TYPICAL DRILLED CONCRETE ANCHORS

A-27 | ANGLE BRACKET DETAIL NTS

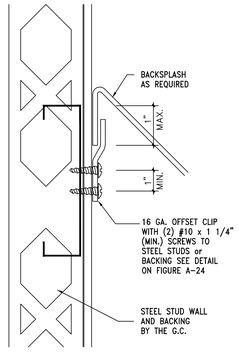

CONNECTIONS TO STEEL

A-28 | OFFSET CLIP DETAILS NTS

NOT USED

- | NOT USED NTS

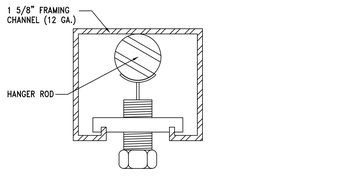

DETAIL 'A'

STIFFENER CONNECTION FOR 7/8" ROD AND SMALLER

TORQUE VALUES FOR FRAMING CHANNEL BOLTS				
BOLT SIZE	1/4"	5/16"	3/8"	/2"
FOOT POUNDS	6	11	19	50

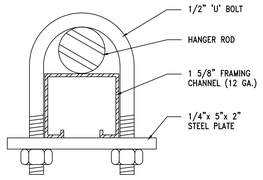

DETAIL 'B'

ALTERNATE STIFFENER CONNECTION

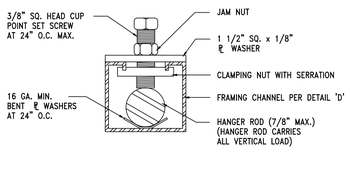

DETAIL 'C'

CHANNEL WITH HANGER ROD

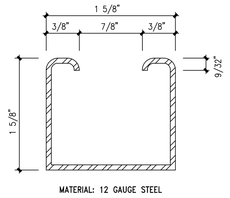

MATERIAL: 12 GAUGE STEEL

DETAIL 'D'

1 5/8" FRAMING CHANNEL SECTION

A-30 | FRAMING CHANNEL / ROD STIFFENER NTS

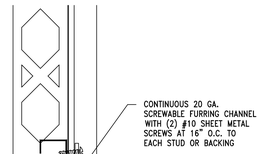

CONNECTIONS TO STEEL

A-33 | FURRING CHANNEL CONNECTIONS NTS

NOT USED

- | NOT USED NTS

NOT USED

- | NOT USED NTS

ESR-4266 | MINIMUM EDGE DISTANCE, SPACING AND CONCRETE THICKNESS FOR KB-TZ2

Setting information	Symbol	Units	Nominal anchor dia. (in.)													
			1/4	3/8			1/2				5/8			3/4		
Effective min. embedment	h_{ef}	in.	1-1/2	1-1/2	2	2-1/2	1-1/2	2	2-1/2	3-1/4	2-3/4	3-1/4	4	3-1/4	3-3/4	4-3/4
		(mm)	(38)	(38)	(51)	(64)	(38)	(51)	(64)	(83)	(70)	(83)	(102)	(83)	(95)	(121)
Min. member thickness	h_{min}	in.	3-1/4	3-1/4	4	5	3-1/2	4	5	5-1/2	5	5-1/2	6	5-1/2	6	8
		(mm)	(83)	(83)	(102)	(127)	(89)	(102)	(127)	(140)	(127)	(140)	(152)	(140)	(152)	(203)
Stainless Steel																
Min. edge distance	c_{min}	in.	1-1/2	5	2-1/2	2-1/2		2-3/4	2-1/2	2-1/4	4	3-1/4	2-1/4	5	4	3-3/4
		(mm)	(38)	(127)	(64)	(64)		(70)	(64)	(57)	(102)	(83)	(57)	(127)	(102)	(95)
	for $s \geq$	in.	1-1/2	8	5	5		5-1/2	4-1/2	5-1/4	7	5-1/2	7	11	7-1/2	5-3/4
		(mm)	(38)	(203)	(127)	(127)		(140)	(114)	(133)	(178)	(140)	(178)	(279)	(191)	(146)
Min. anchor spacing	s_{min}	in.	1-1/2	5	2-1/4	2-1/4		2-3/4	2-1/2	2	5-1/2	2-3/4	3	5	4	4
		(mm)	(38)	(127)	(57)	(57)		(70)	(64)	(51)	(140)	(70)	(76)	(127)	(102)	(102)
	for $c \geq$	in.	1-1/2	8	4	3-1/2		4-1/8	5	4-3/4	5-1/2	4	4-1/4	8	6	5-1/4
		(mm)	(38)	(203)	(102)	(89)		(105)	(127)	(121)	(140)	(102)	(108)	(203)	(152)	(133)

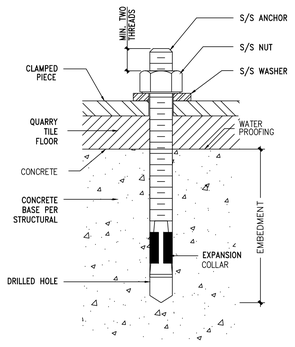

A-34 | TYPICAL DRILLED CONCRETE ANCHORS NTS

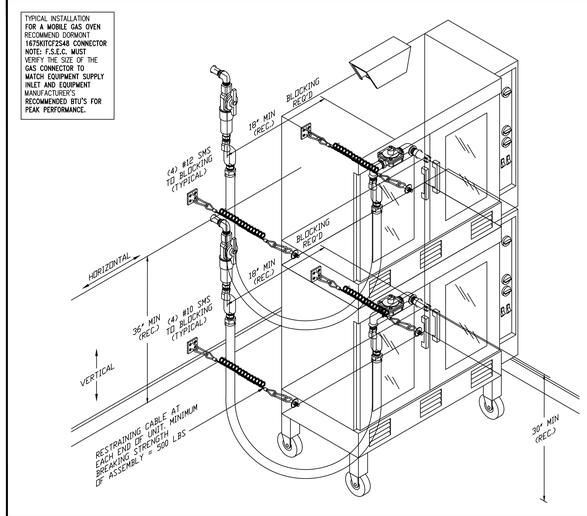

A-40 | FLEX HOSE w/RESTRAINING CABLE FOR MOBILE GAS OVEN NTS

NOT USED

- | NOT USED NTS

tsk
225 South Arlington Avenue
Reno NV, 89501
phone: 775.857.2949
fax: 775.857.2403
www.tska.com

THESE DRAWINGS AND SPECIFICATIONS ARE THE PROPERTY OF TATE SNYDER KIMSEY ARCHITECTS AND MAY NOT BE REPRODUCED OR USED FOR ANY PURPOSE WITHOUT THE ARCHITECTS WRITTEN CONSENT. AS INSTRUMENTS OF SERVICE, THESE DOCUMENTS ARE NOT FINAL AND READY FOR USE, AND THEREFORE NOT VALID, UNLESS THEY ARE SEALED, SIGNED AND DATED.

Copyright, Ltd 2022

Consultant

DIELI MURAWKA HOWE
A Division of WEBB FOODSERVICE DESIGN
Food Service Design Consultants
3020 Sungold Drive
Las Vegas, NV 89134
Phone: 619.602.4107
Design By:
RICHARD DIELI

PLEASE RECYCLE

Project
CITY OF FERNLEY CRRC

Job No: 21-058.00

Owner
CITY OF FERNLEY

50% CONSTRUCTION DOCUMENTS

REVISIONS		
REV	DATE	DESCRIPTION

Sheet Title
FOODSERVICE EQUIPMENT ATTACHMENT DETAILS

Date: MARCH 21, 2023

Sheet No:
FS0.9.1

DRAWING NO. SL22906-22S | SHEET NO. 01 | REV NO. 00

Spring Air

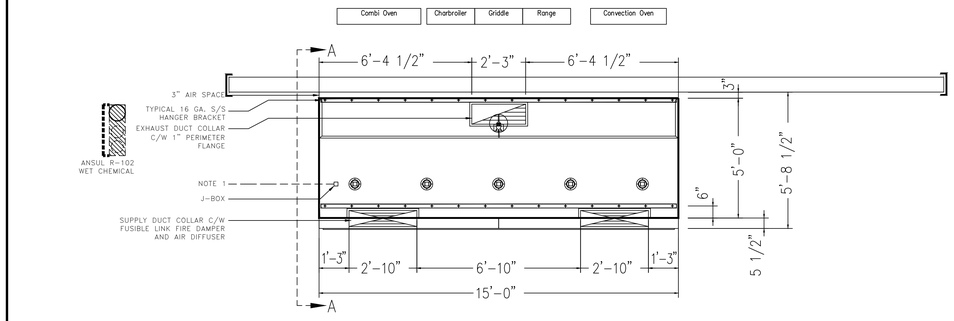

NOTE 1
TYPICAL HOOD SECTION WIRING FOR LED LIGHTS

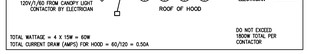

TOTAL WATTAGE = 4 X 15W = 60W
TOTAL CURRENT DRAW (AMPS) FOR HOOD = 60/120 = 0.50A
DO NOT EXCEED 1800W TOTAL PER CONTACTOR

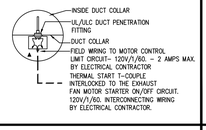

A | PLAN VIEW OF TYPE 1 HOOD, (Item:39) - MODEL: FN-B-MB-15/5 NTS

ALL FIRE SUPPRESSION COMPONENTS SHOWN ON THE HOOD, ARE PROVIDED AND INSTALLED BY S.A.S. AND ALL OTHER REQUIRED ARE PROVIDED BY A LICENSED/AUTHORIZED FIRE SUPPRESSION INSTALLER.

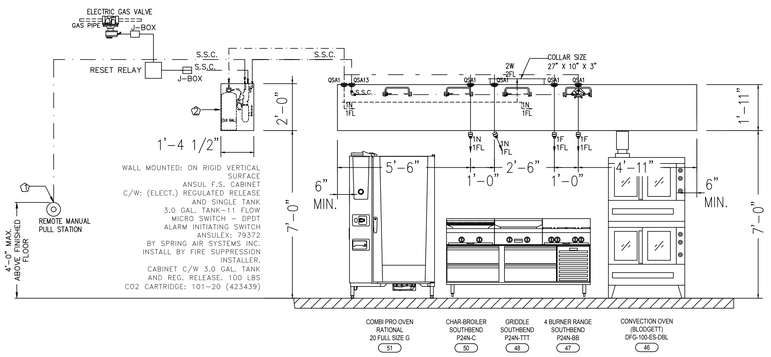

B | ELEVATION VIEW OF TYPE 1 HOOD, (Item: 39) - MODEL: FN-B-MB-15/5 NTS

D | PIPING ISOMETRIC OF FIRE SUPPRESSION SYSTEMS: (ITEM #42) FS-WC-8-MW NTS

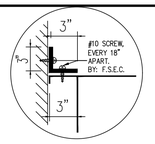

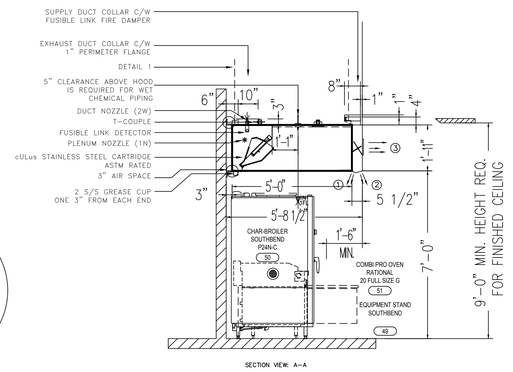

SECTION VIEW: A-A

E | SECTION VIEW OF TYPE 1 HOOD, (Item:39) - MODEL: FN-B-MB-12/5 NTS

ISO (FRONT VIEW)

FIRE SUPPRESSION WIRING SCHEMATIC

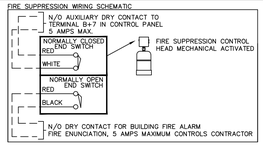

LEGEND – BY: FIRE SUPPRESSION INSTALLER

- S.S.C – 1/16" STAINLESS STEEL CABLE FIELD INSTALL IN 1/2" EMT CONDUIT.
- S.L – SUPPLY LINE 3/8" NPT FIELD PIPE
- TERMINAL DETECTOR P/N 435546 FACTORY INSTALL
- SERIES DETECTOR P/N 435547 FACTORY INSTALL
- CORNER PULLEY P/N. 423251

LEGEND – BY: SPRING AIR SYSTEMS INC.

- A.B.L – APPLIANCES BRANCH LINE 3/8" NPT FACTORY PIPE
- P.B.L – PLENUM BRANCH LINE 3/8" NPT FACTORY PIPE
- SWIVEL ADAPTOR P/N. 423572
- QSA1 – QUICK SEAL
- QSA13 – HOOD SEAL
- QSA9 – HOOD TO HOOD SEAL

DISTRIBUTION PIPING REQUIREMENTS PER 3 GALLON TANK

REQUIREMENTS	SUPPLY	DUCT BRANCH LINE	PLENUM BRANCH LINE	APPLIANCE BRANCH LINE
PIPE SIZE:	3/8 IN.	3/8 IN.	3/8 IN.	3/8 IN.
MAXIMUM LENGTH:	40 FT. (12.2 M)	8 FT. (2.4 M)	4 FT. (1.2 M)	12 FT. (3.7 M)
MAXIMUM RISE:	6 FT. (1.8 M)	4 FT. (1.2 M)	2 FT. (0.6 M)	2 FT. (0.6 M)
MAXIMUM 90° ELBOW:	9	4	4	6
MAXIMUM TEES:	1	2	2	4
MAXIMUM FLOW NUMBERS: 11*	4	2	2	4

*EXCEPTIONS
1. TWELVE (12) FLOW NUMBERS ARE ALLOWED IN ANY ONE TANK FOR DUCT AND PLENUM PROTECTION ONLY.
2. TWELVE (12) FLOW NUMBERS ARE ALLOWED IN ANY ONE TANK USING ONLY TWO-FLOW APPLIANCE NOZZLES.
3. TWELVE (12) FLOW NUMBERS ARE ALLOWED IN ANY ONE TANK USING ONLY THREE-FLOW APPLIANCE NOZZLES.

NOZZLE SUMMARY: FS: WS-9, HOOD 39

APPLIANCE	NOZZLE	QTY.	FLOW POINT	HEIGHT ABOVE COOKING SURFACE	COOKING SURFACE AREA
CHARBROILER	1N	1	1FL	15"-40"	576in² (24"X24")
4 B RANGE	1F	2	1FL	40"-48"	576in² (24"X24")
24"GRIDDLE	1N	1	1FL	35"-40"	576in² (24"X24")
DUCT PROTECTION	2W	1	2FL	NOZZLE PLACEMENT: 2"-8" IN DUCT OPENING.	
PLENUM PROTECTION	1N	2	1FL	SINGLE BANK PROTECTION	
SYSTEM FLOW POINT TOTAL			8FL		

C | HOOD EXHAUST AND SUPPLY DATA INFORMATION NTS

HOOD EXHAUST DATA

HOOD ITEM	HOOD MODEL	HOOD SIZE L	HOOD SIZE W	EXHAUST AIR FLOW REQUIREMENTS TOTAL EXHAUST	STATIC PRESSURE	EXHAUST COLLAR QTY	EXHAUST COLLAR LENGTH	EXHAUST COLLAR WIDTH	GREASE EXTRACTOR QTY	GREASE EXTRACTOR SIZE L	GREASE EXTRACTOR SIZE W	GREASE EXTRACTOR FILTER TYPE	GREASE EXTRACTOR MAX. RATING	HOOD + PLENUM CONSTRUCTION	HOOD + PLENUM WEIGHT
39	FN-B-MB	180"	60"	2805 CFM	0.63" W.C.	1	27"	10"	6	20"	25"	CARTRIDGE	500 CFM/LF	ALL 18GA. 304 S.S.	825 lbs

HOOD SUPPLY DATA

MB FRONT 41"	MB FRONT 33"	MJ GRILL 33"	MJ GRILL 22"	SUPPLY AIR FLOW REQUIREMENTS TOTAL SUPPLY AIR	TOTAL STATIC PRESSURE	SUPPLY COLLAR QTY	SUPPLY COLLAR LENGTH	SUPPLY COLLAR WIDTH
2	2	5	0	2670 CFM	0.2" W.C.	2	34"	8"

Spring Air

DRAWING NO. SL22906-22S

F | HOOD MOUNTING BRACKET DETAIL. NTS

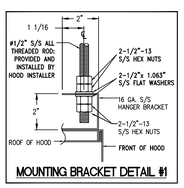

MOUNTING BRACKET DETAIL #1

LIGHT DUTY IS FOR OVENS, CHEESEMELTERS, RETHERMALIZERS, STEAM JACKETED KETTLES AND COMPARTMENT STEAMERS.
MEDIUM DUTY IS FOR GRIDDLES, FRYERS, PASTA COOKERS, TILTING SKILLETS, BRAISING PANS, ROTISSERIES, CONVEYOR PIZZA OVENS.

NOTE: ALL SQUARE, ROUND, RECTANGULAR OR LINEAR HVAC DIFFUSERS SHALL NOT BE LOCATED ANY CLOSER THAN 48" FROM HOOD FRONT OR ENDS, AND SHALL BE DISTRIBUTED EVENLY ALONG THE LENGTH OF THE HOOD.

G | TYPE 1 HOOD SPECIFICATION AND LISTING NTS

TYPE 1 HOOD LISTING

cULus ☐ UL: MH26919 – Exhaust hoods with exhaust damper NSF
☐ UL: MH45396 – Exhaust hoods without exhaust damper

SPRING AIR SYSTEMS INC. HOODS ARE cULus AND UL LISTED, BUILT IN ACCORDANCE WITH UNDERWRITERS LABORATORIES UL710 STANDARD UNDER "EXHAUST HOODS WITHOUT EXHAUST FIRE DAMPERS", AND IN ACCORDANCE WITH UNDERWRITERS' LABORATORIES OF CANADA STANDARD S646-98, "HOODS FOR COMMERCIAL AND INSTITUTIONAL KITCHENS", CURRENT EDITION OF THE NFPA-96 AND INTERNATIONAL MECHANICAL CODE UNDER FILE NUMBERS MH26919 AND MH45396. HOODS COMPLY WITH NSF/ANSI 2 AND ALL APPLICABLE REQUIREMENTS. PRODUCTS APPEAR IN NSF OFFICIAL LISTING.

NFPA-96 4.21 HOOD CLEARANCE

NFPA-96 4.21 CLEARANCE NOTE: WHERE ENCLOSURES ARE NOT REQUIRED, HOOD, GREASE REMOVAL DEVICES, EXHAUST FANS, AND DUCTS SHALL HAVE A CLEARANCE OF A LEAST 17.99" (18") TO COMBUSTIBLE MATERIALS, 2.99" (3") TO LIMITED-COMBUSTIBLE MATERIAL, AND 0" (0") TO NON-COMBUSTIBLE MATERIAL. ALL WALLS SHOWN ARE ASSUMED LIMITED-COMBUSTIBLE, UNLESS OTHERWISE NOTED OR UNLESS A NFPA-96 CLEARANCE REDUCTION SYSTEM IS USED AND IS ACCEPTABLE BY THE AUTHORITY HAVE JURISDICTION.

SUPPLY AIR PLENUM FEATURES

MB PLENUM:
THE MB PLENUM IS CONSTRUCTED WITH 18 GA. STAINLESS STEEL, ON ALL EXPOSED SURFACES.

THE MB PLENUM COMES WITH THREE MAKEUP AIR BOUNDARY REGIONS.
1. APPLIANCE REGION – A S/S PERFORATED PANEL, DISCHARGES AN AIR CURTAIN AROUND THE APPLIANCES PERIMETER.
2. CHEF REGION – S/S PERFORATED PANEL, THAT DISCHARGES TOWARDS CHEF.
3. KITCHEN AMBIENT REGION – A S/S PERFORATED PANEL ASSEMBLY, THAT DISCHARGES, HORIZONTALLY INTO KITCHEN SPACE.

MJ PLENUM:
THE MJ PLENUM IS CONSTRUCTED WITH 18 GA. STAINLESS STEEL, ON ALL EXPOSED SURFACES.
THE MJ PLENUM, COMES WITH A MJ BLOWER ASSEMBLY THAT IS CONSTRUCTED WITH GA. 16 SATIN COATED (PAINTED BOX). IT INCLUDES, A FUSIBLE LINK FIRE DAMPER AND A REOSTAT CONTROL BOX.

MZ PLENUM:
THE MZ PLENUM IS DESIGN WITH GA.16 ALUMINUM HOUSING AND ALUMINUM PERFORATED BOTTOM DISCHARGE.
LOCATION: FINISHED CEILING MOUNTED AND 3" TO 30" FROM END OR FRONT EDGE OF THE HOOD.

ALL SQUARE, ROUND, RECTANGULAR OR LINEAR HVAC DIFFUSERS SHALL NOT BE LOCATED ANY CLOSER THAN 48" (1219MM) TO HOOD FRONT OR ENDS, AND SHALL BE DISTRIBUTED EVENLY ALONG THE LENGTH OF THE HOOD

APPLIANCE RATING:
LIGHT DUTY : OVENS, CHEESEMELTERS, RETHERMALIZERS, STEAM JACKETED KETTLES AND COMPARTMENT STEAMERS.
MEDIUM DUTY: GRIDDLES, FRYERS, PASTA COOKERS, TILTING SKILLETS, BRAISING PANS, ROTISSERIES, AND CONVEYOR PIZZA OVENS

ANSUL R-102 FIRE SUPPRESSION SYSTEM.

WET CHEMICAL FIRE SUPPRESSION FACTORY PRE-PIPING SCHEMATIC. FIRE SUPPRESSION SYSTEM IS DESIGN IN COMPLIANCE WITH UL STANDARD UL300 AND ULC STANDARD ULC/ORD-C1254.6-1995.
COMPONENTS INDICATED ARE SUPPLIED BY SPRING AIR, OR BY A LICENSED/AUTHORIZED FIRE SUPPRESSION INSTALLER". ANY OTHER ITEM/ COMPONENTS NOT SHOWN, THAT MAY BE REQUIRED BY LOCAL CODE REQUIREMENTS ARE NOT INCLUDED.
ALL FIRE SUPPRESSION COMPONENTS SHOWN ON THE HOOD, ARE PROVIDED AND INSTALLED BY S.A.S. AND ALL OTHER REQUIRED ARE PROVIDED BY A LICENSED/AUTHORIZED FIRE SUPPRESSION INSTALLER.
UL/ULC FIRE SUPPRESSION SYSTEM DESIGN IS BASED ON THE APPLIANCE LINEUP SHOWN. CAREFULLY REVIEW THE APPLIANCE LINEUP FOR ACCURACY AND CLEARLY INDICATE CHANGES. THE FIRE SUPPRESSION SYSTEM IS ENGINEERED BY SPRING AIR SYSTEMS BASED ON THIS LINEUP. SPRING AIR SYSTEMS WILL NOT BE RESPONSIBLE FOR ANY CHARGES RESULTING FROM APPLIANCE LINEUP CHANGES ONSITE THAT ARE NOT REFLECTED ON THIS DRAWING. UPON RECEIPT OF THIS COMPLETED FORM WE WILL GENERATE FIRE SUPPRESSION DRAWINGS THAT ARE TO BE SUBMITTED TO THE AHJ FOR PERMITS.

WET CHEMICAL FIRE SUPPRESSION NOTE:

1. THE REMOTE PULL STATION SHOULD BE MOUNTED AT A POINT OF EGRESS AND POSITIONED AT 48" ABOVE THE FINISHED FLOOR.
2. THE FIRE SUPPRESSION SYSTEM IS TO BE INSTALLED, INSPECTED, AND MAINTAINED IN ACCORDANCE TO NFPA17A AND NFPA96.
3. THE APPLIANCES NOZZLES AND FUSIBLE LINK LOCATION ARE BASED ON THE APPLIANCE LAYOUT INFORMATION MADE AVAILABLE TO SPRING AIR SYSTEMS INC. THE APPLIANCES AND THEIR LOCATION MUST BE REVIEWED BEFORE APPROVING DRAWINGS.
4. THE ELECTRIC GAS VALVE IS DESIGNED TO SHUT OFF THE FLOW OF GAS TO THE APPLIANCES UPON ACTUATION OF THE REGULATED RELEASE ASSEMBLY. THE GAS VALVE IS SUPPLIED BY SPRING AIR SYSTEMS INC. AND INSTALLED IN THE APPLIANCES GAS LINE, DOWNSTREAM OF THE MANUAL SHUT OFF VALVE AND CLOSE TO THE HOOD, BUT NOT UNDER THE HOOD. THE GAS VALVE MUST BE EASILY ACCESSIBLE. INSTALL BY MECHANICAL CONTRACTOR.

NOTE: FUSIBLE LINK SELECTION FOR HOODS: K STYLE AND ML STYLE 450°C – 232°C

APPLIANCES CLEARANCE

NOTE:
1) THE FRONT OF THE HOOD REQUIRES A MINIMUM OVERHANG OF 12", FROM THE FRONT EDGE OF THE COOKING SURFACE TO THE FRONT BOTTOM EDGE OF THE HOOD.
2) THE LEFT AND RIGHT END OF THE HOOD, MUST OVERHANG THE SIDES OF THE APPLIANCE BY AT LEAST 6"
3) THE DISTANCE FROM THE APPLIANCE COOKING SURFACE, TO THE BOTTOM OF THE HOOD'S EXTRACTOR, MUST BE BETWEEN 18" TO 51"
4) A MINIMUM OF 8" CLEARANCE, FROM THE BACK OF THE APPLIANCE TO THE BACK WALL, IS REQUIRED

WARNING:
ANY CHANGES IN THE HOOD TYPE OR MAKES/MODELS OF COOKING EQUIPMENT, MAY AFFECT THE SIZE OF REQUIRED AIR-FLOWS FOR THE HOOD.__COOKING EQUIPMENT MODEL, MANUFACTURER & LOCATION MUST BE VERIFIED FOR FIRE SUPPRESSION PRIOR TO FABRICATION.

tsk
225 South Arlington Avenue
Reno NV, 89501
phone: 775.857.2949
fax: 775.857.2403
www.tska.com

THESE DRAWINGS AND SPECIFICATIONS ARE THE PROPERTY OF TATE SNYDER KIMSEY ARCHITECTS AND MAY NOT BE REPRODUCED OR USED FOR ANY PURPOSE WITHOUT THE ARCHITECTS WRITTEN CONSENT. AS INSTRUMENTS OF SERVICE, THESE DOCUMENTS ARE NOT FINAL AND READY FOR USE, AND THEREFORE NOT VALID, UNLESS THEY ARE SEALED, SIGNED AND DATED.

Copyright, Ltd 2022

Consultant

DIELI MURAWKA HOWE
A Division of WEBB FOODSERVICE DESIGN
Food Service Design Consultants
3020 Sungold Drive
Las Vegas, NV 89134
Phone: 619.602.4107
Design By:
RICHARD DIELI

PLEASE RECYCLE

Project
CITY OF FERNLEY
CRRC

Job No: 21-058.00

Owner
CITY OF FERNLEY

50% CONSTRUCTION DOCUMENTS

REVISIONS

REV	DATE	DESCRIPTION

Sheet Title
FOODSERVICE EQUIPMENT EXHAUST HOOD DETAILS

Date: MARCH 21, 2023

Sheet No:
FS0.10.0

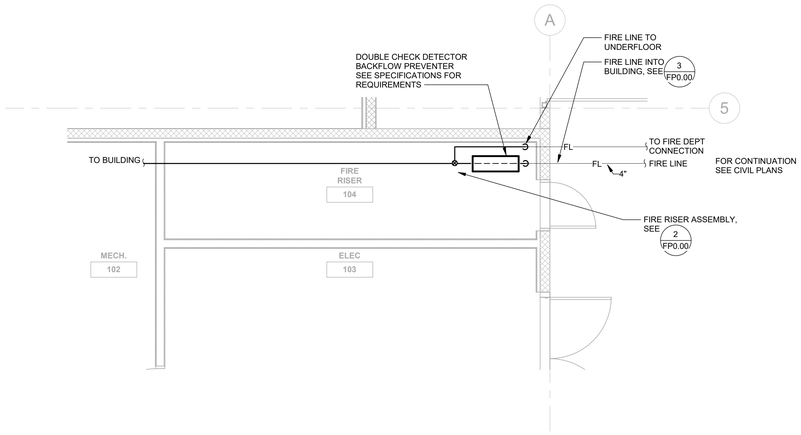

FIRE PROTECTION ENLARGED - FIRE RISER ROOM

SCALE: 1/4" = 1'-0"

1 FP0.00

N

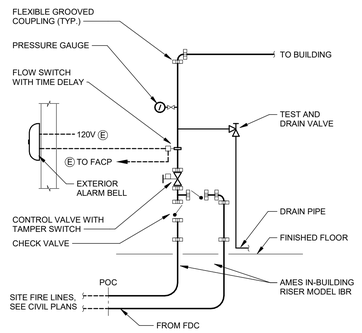

WET FIRE RISER

SCALE: NONE

2 FP0.00

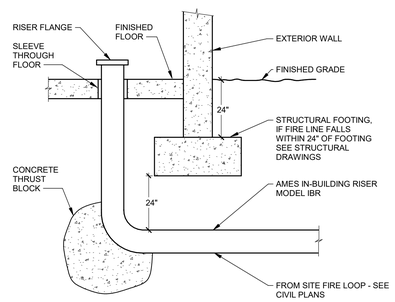

FIRE LINE ENTERING BUILDING

SCALE: NONE

3 FP0.00

GENERAL NOTES

1. THIS DRAWING IS INFORMATIONAL ONLY AND IS INTENDED TO AID IN THE PREPARATION OF CONTRACTOR BIDS.
2. HATCHED REGION REPRESENTS AREA TO BE FIRE PROTECTED.
3. DESIGN OF THE FIRE SPRINKLER SYSTEM SHALL BE IN ACCORDANCE WITH NFPA 13, LOCAL AND STATE AUTHORITIES BY A NEVADA LICENSED FIRE PROTECTION PROFESSIONAL. WORK INCLUDES INSTALLATION OF NEW PIPING AND HEADS AS REQUIRED TO ACCOMMODATE NEW FLOOR PLAN, DUCTWORK, PIPING AND CONDUITS. SEE SPECIFICATIONS AND DRAWINGS FOR PROJECT REQUIREMENTS.
4. FIRE SPRINKLER CONTRACTOR SHALL PERFORM A HYDRAULIC ANALYSIS TO VERIFY EXISTING CONDITIONS PRIOR TO PERFORMANCE OF WORK.
5. EXACT LOCATIONS OF NEW HEADS SHALL BE REVIEWED AND APPROVED BY THE ARCHITECT.
6. THE FIRE SPRINKLER CONTRACTOR/DESIGNER SHALL OBTAIN WATER SUPPLY INFORMATION FROM THE CITY OF FERNLYE FIRE DEPARTMENT.
7. CONTRACTOR SHALL PROVIDE PIPING COMPONENTS TO ALLOW FOR PIPE MOVEMENT AT SEISMIC JOINTS. REVIEW STRUCTURAL DRAWINGS FOR EXPANSION JOINT INFORMATION.
8. DO NOT ROUTE ANY PIPING DIRECTLY ABOVE ELECTRICAL EQUIPMENT OR PANELS.
9. ALL NEW PIPING IS TO BE STEEL WITH SCREWED FITTINGS FOR PIPING 2" AND SMALLER AND WELDED, GROOVED OR MECHANICAL T OUTLETS FOR PIPING 2.5" AND LARGER. PLAIN END PIPING CONNECTIONS WILL NOT BE ACCEPTABLE. PLASTIC PIPING WILL NOT BE ACCEPTABLE. ALL PIPING TO BE CONCEALED ABOVE CEILINGS UNLESS OTHERWISE NOTED PIPING IS TO BE INSTALLED TO DRAIN IN STRICT ACCORDANCE WITH NFPA 13. PIPING SHALL RUN STRAIGHT AND TRUE WITH BUILDING FEATURES.
10. SYSTEM SHALL BE HYDRAULICALLY DESIGNED. CONTRACTOR SHALL OBTAIN WATER SUPPLY INFORMATION AND DETERMINE SPRINKLER HEAD SPACING AND DESIGN DENSITIES FOR HYDRAULIC CALCULATIONS.
11. CONTRACTOR SHALL HOLD A VALID NEVADA CONTRACTORS LICENSE FOR THE TYPE OF WORK BEING PERFORMED.
12. ALL PIPING SHALL BE SUSPENDED AND BRACED IN STRICT ACCORDANCE WITH NFPA 13 AND FACTORY MUTUAL.
13. THIS IS A PERFORMANCE SPECIFICATION AND THE CONTRACTOR SHALL BE RESPONSIBLE FOR PROVIDING ALL PERMITS, FEES, DESIGN, MATERIAL, FABRICATION, STORAGE, INSTALLATION, TESTING AND CLEANUP FOR A COMPLETE AND OPERABLE SYSTEM. SYSTEM SHALL MEET THE REQUIREMENTS NFPA 13, 24, NEC, LOCAL AND STATE BUILDING OFFICIALS, AND HEALTH DEPARTMENT. SCOPE OF WORK INCLUDES A COMPLETE AND OPERABLE WET FIRE SPRINKLER AND STANDPIPE SYSTEM THROUGHOUT.
    A. ALARM DEVICES WITH WIRING CONNECTIONS FOR ELECTRICAL/ALARM CONTRACTOR.
    B. SUBMIT COMPLETE SET OF DRAWINGS, CALCULATIONS AND CATALOG CUTS OF MATERIALS TO THE AUTHORITY HAVING JURISDICTION FOR APPROVAL. OBTAIN APPROVAL PRIOR TO INSTALLATION. DRAWINGS AND CALCULATIONS SHALL BE SIGNED BY A NICET CERTIFIED LEVEL III FIRE SYSTEMS TECHNICIAN.

SYMBOLS AND ABBREVIATIONS LIST

WSP	WET SPRINKLER PIPING
(E)	EXISTING
(N)	NEW
P.O.C.	POINT OF CONNECTION
S.O.G.	SLAB ON GRADE
D.I.P.	DUCTILE IRON PIPE
SSU	STANDARD SPRAY UPRIGHT
SSP	STANDARD SPRAY PENDENT
FDC	FIRE DEPARTMENT CONNECTION
PIV	POST INDICATOR VALVE
	OS & Y GATE VALVE W/ TAMPER SWITCH.
	OS & Y GATE VALVE W/ TAMPER SWITCH OR GATE VALVE.
	CHECK VALVE

DRAWING SHEET INDEX

FP0.00	FIRE PROTECTION SCHEDULES, LEGEND, & NOTES
FP1.01	FIRE PROTECTION OVERALL FLOOR PLAN

tsk

225 South Arlington Avenue
Reno NV, 89501
phone: 775.857.2949
fax: 775.857.2403
www.tska.com

THESE DRAWINGS AND SPECIFICATIONS ARE THE PROPERTY OF TATE SNYDER KIMSEY ARCHITECTS AND MAY NOT BE REPRODUCED OR USED FOR ANY PURPOSE WITHOUT THE ARCHITECTS WRITTEN CONSENT. AS INSTRUMENTS OF SERVICE, THESE DOCUMENTS ARE NOT FINAL AND READY FOR USE, AND THEREFORE NOT VALID, UNLESS THEY ARE SEALED, SIGNED AND DATED.

Copyright, Ltd 2023

Consultant

AINSWORTH ASSOCIATES
MECHANICAL ENGINEERS
1420 HOLCOMB AVE., SUITE 201
RENO, NV 89502
TEL: 775-329-9100
4557 GREENVIEW DR.
EL DORADO HILLS, CA 95762
TEL: 916-737-6014
www.aa-me.com

JOB 2021-065

PLEASE RECYCLE

Project

CITY OF FERNLEY CRRC

Job No: 21-058.00

Owner

CITY OF FERNLEY

PROGRESS
NOT FOR CONSTRUCTION

50% CONSTRUCTION DOCUMENTS

REVISIONS		
REV	DATE	DESCRIPTION

Sheet Title

FIRE PROTECTION SCHEDULES, LEGEND, & NOTES

Date: MARCH 21, 2023

Sheet No:

FP0.00

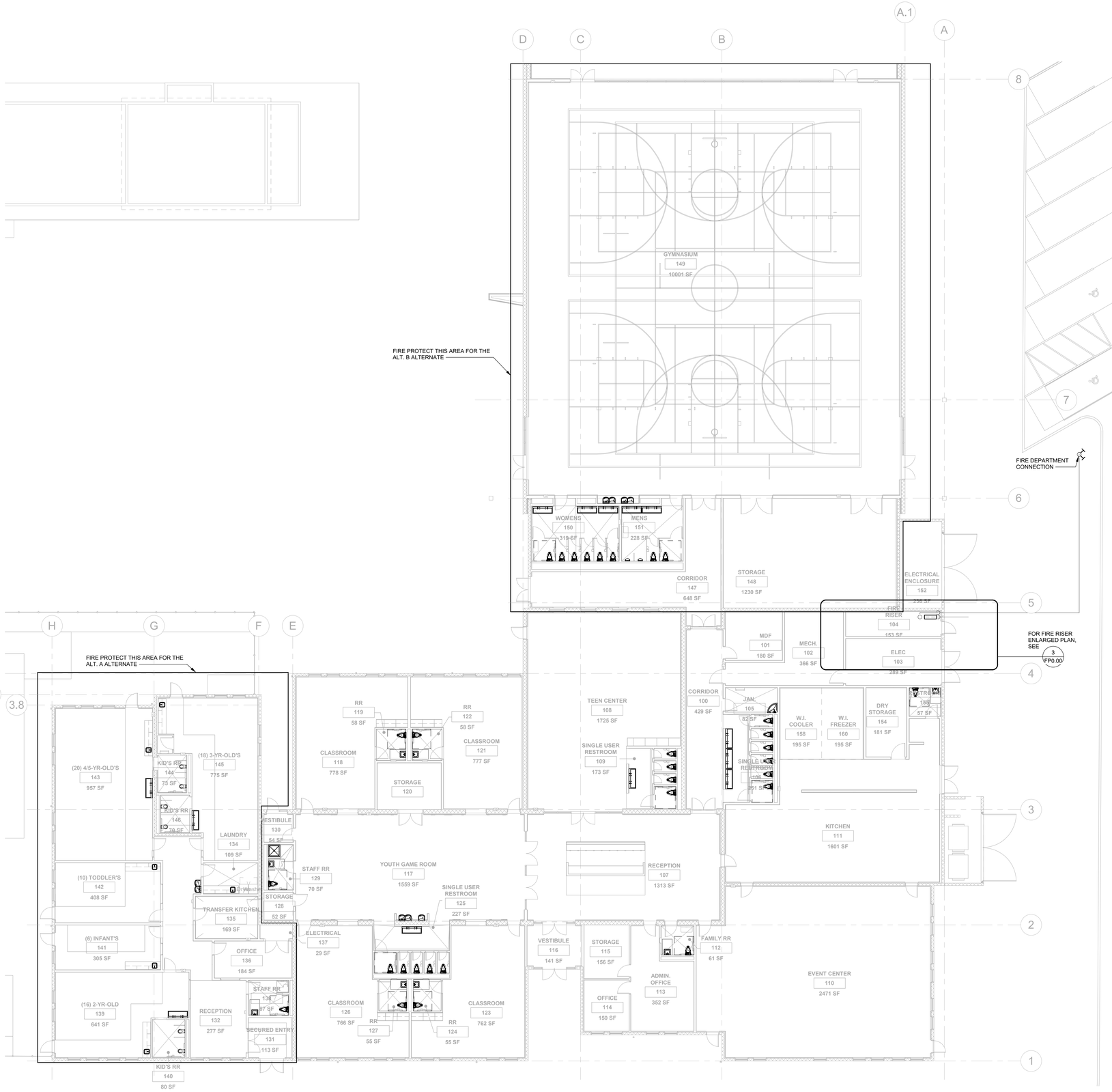

FIRE PROTECTION OVERALL FLOOR PLAN 1 FP1.01

SCALE: 3/32" = 1'-0"

N

tsk
225 South Arlington Avenue
Reno NV, 89501
phone: 775.857.2949
fax: 775.857.2403
www.tska.com

THESE DRAWINGS AND SPECIFICATIONS ARE THE PROPERTY OF TATE SNYDER KIMSEY ARCHITECTS AND MAY NOT BE REPRODUCED OR USED FOR ANY PURPOSE WITHOUT THE ARCHITECTS WRITTEN CONSENT. AS INSTRUMENTS OF SERVICE, THESE DOCUMENTS ARE NOT FINAL AND READY FOR USE, AND THEREFORE NOT VALID, UNLESS THEY ARE SEALED, SIGNED AND DATED.

Copyright, Ltd 2023

Consultant

AINSWORTH ASSOCIATES
MECHANICAL ENGINEERS
1420 HOLCOMB AVE., SUITE 201
RENO, NV 89502
TEL: 775-329-9100
4557 GREENVIEW DR.
EL DORADO HILLS, CA 95762
TEL: 916-737-6014
www.aa-me.com

JOB 2021-065

PLEASE RECYCLE

Project

CITY OF FERNLEY CRRC

Job No: 21-058.00

Owner

CITY OF FERNLEY

PROGRESS NOT FOR CONSTRUCTION

50% CONSTRUCTION DOCUMENTS

REVISIONS		
REV	DATE	DESCRIPTION

Sheet Title

FIRE PROTECTION OVERALL FLOOR PLAN

Date: MARCH 21, 2023

Sheet No:

FP1.01

AIR DISTRIBUTION SCHEDULE

SYMBOL	SERVICE	BORDER	CFM RANGE	NECK SIZE	DESCRIPTION	BASIS OF DESIGN	NOTES
A1	SUPPLY	LAY-IN	0-125	6 RD	SQUARE CONE DIFFUSER WITH FULLY ADJUSTABLE AIRFLOW PATTERN. PROVIDE ROUND TRANSITION AS REQUIRED	PRICE MODEL #SCDA, BORDER TYPE 3 FRAME FOR 24/24 FACE SIZE	2
			130-175	8 RD			
			180-280	10 RD			
			285-450	12 RD			
			455-700	14 RD			
A2	SUPPLY	GYPBOARD	0-125	6 RD - 12/12 FACE	SQUARE CONE DIFFUSER WITH FULLY ADJUSTABLE AIRFLOW PATTERN. PROVIDE ROUND TRANSITION AS REQUIRED	PRICE MODEL #SCDA, BORDER TYPE 3 FRAME	2
			130-175	8 RD - 20/20 FACE			
			180-280	10 RD - 20/20 FACE			
			285-450	12 RD - 24/24 FACE			
			455-700	14 RD - 24/24 FACE			
A3	RETURN EXHAUST TRANSFER	LAY-IN, GYPBOARD	0-125	8x8	SQUARE EGGCRATE GRILLE WITH WHITE FINISH.	PRICE MODEL #80, BORDER TYPE TB FOR T-BAR, BORDER TYPE F FOR SURFACE MOUNT	3
			130-180	10x10			
			185-270	12x12			
			275-375	14x14			
			380-480	16x16			
			485-700	18x18			
			705-1100	20x20			
			ALL T-BAR LOCATIONS	22x22			
B1	SUPPLY	SIDEWALL	SEE PLANS FOR AIRFLOW AND SIZE		LOUVERED SUPPLY DIFFUSER, DOUBLE DEFLECTION, 3/4" BLADE SPACING	PRICE MODEL #520, BORDER TYPE FOR SURFACE MOUNT OR DUCT MOUNT WHERE REQUIRED	
B2	RETURN EXHAUST	SIDEWALL	SEE PLANS FOR AIRFLOW AND SIZE		LOUVERED RETURN GRILLE, SINGLE DEFLECTION, 3/4" BLADE SPACING	PRICE MODEL #530, BORDER TYPE FOR SURFACE MOUNT OR DUCT MOUNT WHERE REQUIRED	
B3	RETURN EXHAUST	SIDEWALL	SEE PLANS FOR AIRFLOW AND SIZE		STEEL GYMNASIUM GRILLE, 0° DEFLECTION, 3/4" BLADE SPACING	PRICE MODEL #95, BORDER TYPE FOR SURFACE MOUNT	
C	SUPPLY	ROUND CONE	SEE PLANS FOR AIRFLOW AND SIZE		ROUND CONE DIFFUSER WITH ADJUSTABLE PATTERN AND SAFETY CHAIN	PRICE MODEL #RCD	
G1	SUPPLY	DUCT MOUNT	SEE PLANS FOR AIRFLOW AND SIZE		EXTRUDED SPIRAL DUCT MOUNTED DIFFUSER, DOUBLE DEFLECTION, 3/4" BLADE SPACING, AE1 VOLUME EXTRACTOR	PRICE MODEL #SDGE	
G2	RETURN EXHAUST	DUCT MOUNT	SEE PLANS FOR AIRFLOW AND SIZE		EXTRUDED SPIRAL DUCT MOUNTED GRILLE, PERFORATED FACE	PRICE MODEL #SDGER	
	BALANCE DAMPER	VOLUME CONTROL DAMPER (VCD)	RUSKIN MODEL #CD-50 OPPOSED BLADE DAMPER WITH LOCKING QUADRANT		SEE PLANS FOR LOCATION, APPLICATION AND DETAILS	CONTRACTOR CONSTRUCTED DAMPER NOT ALLOWED	
	BALANCE DAMPER	MANUAL BALANCE DAMPER (MBD)	RUSKIN MODEL #MDRS MANUAL BALANCING DAMPER WITH STANDOFF BRACKET		SEE PLANS FOR LOCATION, APPLICATION AND DETAILS	CONTRACTOR CONSTRUCTED DAMPER NOT ALLOWED	
	FIRE BARRIERS	FIRE DAMPER (FD)	RUSKIN MODEL #DIBD2 FIRE DAMPER HAVING A UL555 RATING. DAMPER SHALL HAVE FUSIBLE INK RATED AT 165°F		SEE PLANS FOR LOCATION, APPLICATION AND DETAILS	MANUFACTURER RESPONSIBLE TO VERIFY EXACT SIZE/MODEL/STYLE FOR EACH APPLICATION. PROVIDE ACCESS DOORS AS REQUIRED , COORDINATE ACESS DOORS WITH ARCHITECT	
	SMOKE BARRIERS	SMOKE DAMPER (SD)	RUSKIN MODEL #SD102 SMOKE DAMPER HAVING A UL555 RATING.		SEE PLANS FOR LOCATION, APPLICATION AND DETAILS	MANUFACTURER RESPONSIBLE TO VERIFY EXACT SIZE/MODEL/STYLE FOR EACH APPLICATION. PROVIDE ACCESS DOORS AS REQUIRED , COORDINATE ACESS DOORS WITH ARCHITECT	
	FIRE SMOKE BARRIERS	COMBINATION FIRE & SMOKE DAMPER (FSD)	RUSKIN MODEL #FSD-36 COMBINATION FIRE/SMOKE DAMPER HAVING A UL555 RATING. DAMPER SHALL HAVE FUSIBLE INK RATED AT 165°F		SEE PLANS FOR LOCATION, APPLICATION AND DETAILS	MANUFACTURER RESPONSIBLE TO VERIFY EXACT SIZE/MODEL/STYLE FOR EACH APPLICATION. PROVIDE ACCESS DOORS AS REQUIRED , COORDINATE ACESS DOORS WITH ARCHITECT	

NOTES:
1. PROVIDE INLET AND OUTLET SIZES ABOVE UNLESS SIZES ARE SPECIFICALLY NOTED ON PLANS.
2. DIRECTIONAL AIR THROW PATTERNS SHALL BE FIELD ADJUSTED IN ACCORDANCE WITH REPRESENTATIONS BELOW AND AS NOTED ON DRAWINGS.



3. INLETS NOTED WITH AN "R" ARE ON THE RETURN SYSTEM AND INLETS NOTED WITH AN "E" ARE ON THE EXHAUST SYSTEM.

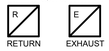

4. AIR DISTRIBUTION SHALL BE FACTORY WHITE FINISH, UNLESS NOTED OTHERWISE.

GENERAL NOTES

1. ALL WORK AND MATERIALS SHALL CONFORM TO THE LATEST ADOPTED EDITION OF THE IBC, UMC, UPC, NEC, NFPA, NEVADA STATE FIRE MARSHAL REGULATIONS, LOCAL AND STATE ORDINANCES, AND INDUSTRY STANDARDS.
2. THE INFORMATION REGARDING EXISTING CONDITIONS SHOWN ON THE DRAWINGS IS BELIEVED TO BE CORRECT, BUT IS NOT GUARANTEED. THE CONTRACTOR SHALL RELY ON SITE VISITS AND NECESSARY INVESTIGATION TO ENSURE THAT HIS BID IS CORRECT AND COMPLETE AS REQUIRED TO PROVIDE THE SCOPE OF WORK DESCRIBED ON THE DRAWINGS. EXTRA COST WILL NOT BE ALLOWED TO THE CONTRACTOR FOR FAILURE TO PERFORM THIS TASK.
3. SUBMIT FOR REVIEW AND APPROVAL ELECTRONIC COPIES OF SUBMITTALS FOR ALL EQUIPMENT, DUCTWORK, AIR DISTRIBUTION, PLUMBING FIXTURES, INSULATION, VALVES, AND PIPING MATERIALS.
4. AS-BUILT DRAWINGS SHALL BE SUBMITTED FOR REVIEW AND APPROVAL UPON COMPLETION OF THE WORK, AND PRIOR TO FINAL PAYMENT. AS-BUILT DRAWINGS SHALL BE MAINTAINED ON SITE AS THE WORK PROGRESSES AND SHALL BE AVAILABLE FOR REVIEW BY THE OWNER AND/OR ARCHITECT/ENGINEER AT ALL TIMES.
5. ALL EQUIPMENT AND MATERIALS SHALL BE INSTALLED IN STRICT ACCORDANCE WITH THE MANUFACTURER'S WRITTEN INSTALLATION INSTRUCTIONS.
6. THE WORK AND MATERIALS SHALL BE GUARANTEED FOR A PERIOD OF ONE YEAR FROM THE DATE OF ACCEPTANCE BY THE OWNER.
7. COORDINATE THE ACTUAL LOCATION OF ROOFTOP UNITS, FANS, PIPES, VENTS, ETC. THROUGH THE ROOF WITH THE ROOF PLANS.
8. COORDINATE THE EXACT LOCATION OF EQUIPMENT AND OF PENETRATIONS THROUGH THE ROOF, FLOORS, AND WALLS WITH STRUCTURAL DRAWINGS PRIOR TO ANY ROUGH-IN.
9. REFER TO THE ARCHITECTURAL DRAWINGS FOR THE FULL EXTENT OF DEMOLITION AND NEW WORK TO BE PERFORMED.
10. SEISMIC BRACING FOR MECHANICAL SYSTEMS (EQUIPMENT, DUCTWORK, PIPING, AND CONDUIT) SHALL COMPLY WITH ALL APPLICABLE REQUIREMENTS OF THE 2018 INTERNATIONAL BUILDING CODE (IBC) INCLUDING ALL APPLICABLE PROVISIONS OF THE AMERICAN SOCIETY OF CIVIL ENGINEERS (ASCE) MINIMUM DESIGN LOADS FOR BUILDINGS (ASCE STANDARD 7-16 SECTION 13.1.3).
11. PIPING SHALL BE INSTALLED SUCH THAT IT DOES NOT OBSTRUCT ACCESS OR REMOVAL OF MECHANICAL EQUIPMENT.
12. DASHED OUTLINES DENOTE THE REQUIRED SERVICE CLEARANCE SPACE (SEE DUCTWORK PLANS). NO PIPING, DUCTWORK, CONDUIT, AND/OR CEILING HANGERS SHALL BE INSTALLED IN THE DESIGNATED SERVICE/ACCESS CLEARANCE AREA.
13. SEE ARCHITECTURAL AND/OR STRUCTURAL DRAWINGS FOR HOLE CORING REQUIREMENTS.
14. SEE REFLECTED CEILING PLANS FOR THE EXACT LOCATION OF ALL DIFFUSERS AND GRILLES LOCATED IN CEILINGS.
15. COORDINATE ROUTING OF DUCTWORK WITH PIPING, PLUMBING, FIRE SPRINKLER, AND ELECTRICAL TRADES PRIOR TO BEGINNING WORK.
16. ALL EQUIPMENT, PIPING, DUCTWORK, ETC. SHALL BE SUPPORTED AS REQUIRED TO PROVIDE A VIBRATION-FREE INSTALLATION.
17. ALL ROOF PENETRATIONS SHALL BE FLASHED AND COUNTER-FLASHED WATERTIGHT.
18. CONSTRUCT ALL DUCTWORK LOCATED BETWEEN AIR HANDLING UNITS AND VARIABLE AIR VOLUME BOXES FOR 4 INCH W.G. PRESSURE CLASS PER SMACNA REQUIREMENTS. CONSTRUCT ALL OTHER DUCTWORK FOR 2 INCH W.G. PRESSURE CLASS, EXCEPT WHERE NOTED OTHERWISE, PER SMACNA REQUIREMENTS.
19. ALL DUCT BRANCH SIZES TO CEILING DIFFUSERS SHALL BE CEILING DIFFUSER NECK SIZE, EXCEPT WHERE NOTED OTHERWISE.
20. PROVIDE FLEXIBLE DUCT CONNECTIONS WHEN CONNECTING DUCTWORK TO EQUIPMENT.
21. TESTING AND BALANCING SHALL BE CONDUCTED BY AN AABC CERTIFIED TEST AND BALANCE CONTRACTOR. TEST AND BALANCE ALL AIR AND WATER SYSTEMS TO ACHIEVE THE LISTED VOLUMES. SET ALL VOLUME DAMPERS AND TEST/BALANCE SYSTEMS SUCH THAT THE VOLUME INDICATED ON THE DRAWINGS IS BEING DELIVERED. PROVIDE A WRITTEN REPORT SHOWING 'KA' FACTORS, FPM, AND CFM FOR EACH DIFFUSER, REGISTER, AND GRILLE, AND THE TOTAL AIR VOLUME FOR EACH TESTED SYSTEM. THE FINALIZED REPORT SHALL BE SUBMITTED TO THE ARCHITECT/ENGINEER FOR REVIEW AND APPROVAL UPON COMPLETION OF THE TESTING AND BALANCING AND BEFORE SCHEDULING THE FINAL OBSERVATION.
22. PROVIDE MANUAL VOLUME DAMPERS AT EACH SUPPLY AND EXHAUST DUCT BRANCH. MANUAL VOLUME DAMPERS SHALL BE LOCATED AS FAR AWAY FROM THE DIFFUSER/GRILLE AS POSSIBLE.
23. FLEXIBLE DUCT LENGTHS SHALL NOT EXCEED 5'-0" (INSTALL IN CONCEALED LOCATIONS ONLY).
24. PROVIDE A MINIMUM OF 12" BELOW DUCTWORK TO CEILING FOR REMOVAL OF LIGHT FIXTURES.
25. COORDINATE THE EXACT SIZE AND LOCATION OF DUCTWORK WITH ALL OTHER TRADES.
26. VERIFY FINAL THERMOSTAT LOCATIONS WITH BUILT-IN CABINETS, DOOR SWINGS, ETC.
27. THERMOSTATS MOUNTED ON EXTERIOR WALLS SHALL HAVE AN INSULATED BASE.
28. SEE KITCHEN DRAWINGS FOR EXACT LOCATIONS AND CONNECTION SIZES OF KITCHEN HOODS.
29. ANY DRAIN LINES WHICH DAYLIGHT ABOVE APPROVED RECEPTOR SHALL BE 2 PIPE DIAMETERS ABOVE RECEPTOR'S FLOOD RIM.
30. THE CONTRACTOR SHALL BE RESPONSIBLE FOR CONNECTION TO ALL NEW KITCHEN EQUIPMENT. SEE FOOD SERVICE DRAWINGS FOR ADDITIONAL CONTRACTOR RESPONSIBILITIES. INSTALLATION SHALL BE COMPLETE AND SHALL BE OPERABLE TO THE SATISFACTION OF THE OWNER'S REPRESENTATIVE.
31. PRIOR TO ROUGH-IN OF ANY PLUMBING FOR KITCHEN EQUIPMENT FURNISHED BY OTHERS, REVIEW EXACT LOCATIONS OF ROUGH-INS WITH DIMENSIONED ROUGH-IN FOOD SERVICE DRAWINGS AND CUT SHEETS.
32. SYMBOL (xx) DENOTES KITCHEN EQUIPMENT. SEE FOOD SERVICE DRAWINGS FOR EXACT ROUGH-IN AND LOCATION.

MECHANICAL LEGEND

RSL	REFRIGERANT SUCTION LINE
RLL	REFRIGERANT LIQUID LINE
D	CONDENSATE DRAIN PIPE
	EXISTING ITEM TO BE REMOVED
	FLEXIBLE CONNECTION
GV	GATE VALVE
BLV	BALL VALVE
BFV	BUTTERFLY VALVE
BV	BALANCE VALVE
CKV	CHECK VALVE
LH GC	LEVER HANDLE GAS COCK
PT	PETES PLUG
Ø	THERMOMETER, PRESSURE GAUGE
	RETURN/EXHAUST AIR
	SUPPLY/OUTSIDE AIR
	OUTSIDE AIR DUCT SECTION
	RETURN OR EXHAUST AIR DUCT SECTION
	SUPPLY AIR DUCT SECTION
(E) (N)	DUCT POD/ POC
12x10	DUCT (FIRST FIGURE SIDE SHOWN SECOND FIGURE SIDE NOT SHOWN)
	TURNING VANES
	FLEXIBLE DUCTWORK
	MANUAL DAMPER
R D	RISE OR DROP IN DIRECTION OF ARROW
T	ROOM THERMOSTAT
TS	TEMPERATURE SENSOR
Ø	DIAMETER
ROOMNAME --	ROOM NAME AND NUMBER
AC	AIR CONDITIONING
AD, AP	ACCESS DOOR, ACCESS PANEL
CC	CENTER TO CENTER
CFM,f	CUBIC FEET OF AIR PER MINUTE
(E), (N)	EXISTING, NEW
EAD, OAD, RAD	EXHAUST AIR, OUTSIDE AIR & RETURN AIR DAMPER
EF	EXHAUST FAN
°F	DEGREES FAHRENHEIT
FA, TB	FROM ABOVE, TO BELOW
FB, TA	FROM BELOW, TO ABOVE
FD / FSD	FIRE DAMPER / COMBINATION FIRE SMOKE DAMPER
GA.	GAUGE
GALV.	GALVANIZED
AAV. / MAV.	AUTOMATIC / MANUAL AIR VENT
MAX., MIN.	MAXIMUM, MINIMUM
M.D.	MANUAL DAMPER
P.D.	PITCH DOWN IN DIRECTION OF ARROW
POC.	POINT OF CONNECTION
POD.	POINT OF DISCONNECT
PRV.	PRESSURE REDUCING VALVE
RA, EA.	RETURN AIR, EXHAUST AIR
SA, OA.	SUPPLY AIR, OUTSIDE AIR
TYP.	TYPICAL
UNO	UNLESS NOTED OTHERWISE

DRAWING SHEET INDEX

M0.00	MECHANICAL LEGEND, NOTES, & AIR DISTRIBUTION
M0.01	MECHANICAL EQUIPMENT SCHEDULES
M1.01	MECHANICAL OVERALL FLOOR PLAN
M1.11	MECHANICAL PARTIAL FLOOR PLAN - BASE BID
M1.11A	MECHANICAL PARTIAL FLOOR PLAN - ALT. A
M1.11B	MECHANICAL PARTIAL FLOOR PLAN - ALT. B
M2.1	MECHANICAL PARTIAL ZONING PLAN - BASE BID
M2.2	MECHANICAL PARTIAL ZONING PLAN - ALT. A
M2.3	MECHANICAL PARTIAL ZONING PLAN - ALT. B
M4.01	MECHANICAL PARTIAL ROOF PLAN - BASE BID
M4.01A	MECHANICAL PARTIAL ROOF PLAN - ALT. A
M4.01B	MECHANICAL PARTIAL ROOF PLAN - ALT. B
M5.01	CAPTIVEAIRE PLANS
M5.02	CAPTIVEAIRE PLANS
M5.03	CAPTIVEAIRE PLANS
M5.04	CAPTIVEAIRE PLANS
M6.01	MECHANICAL DETAILS

tsk
225 South Arlington Avenue
Reno NV, 89501
phone: 775.857.2949
fax: 775.857.2403
www.tska.com

THESE DRAWINGS AND SPECIFICATIONS ARE THE PROPERTY OF TATE SNYDER KIMSEY ARCHITECTS AND MAY NOT BE REPRODUCED OR USED FOR ANY PURPOSE WITHOUT THE ARCHITECTS WRITTEN CONSENT. AS INSTRUMENTS OF SERVICE, THESE DOCUMENTS ARE NOT FINAL AND READY FOR USE, AND THEREFORE NOT VALID, UNLESS THEY ARE SEALED, SIGNED AND DATED.

Copyright, Ltd 2023

Consultant

AINSWORTH ASSOCIATES
MECHANICAL ENGINEERS
1420 HOLCOMB AVE., SUITE 201
RENO, NV 89502
TEL: 775-329-9100
4557 GREENVIEW DR.
EL DORADO HILLS, CA 95762
TEL: 916-737-6014
www.aa-me.com

JOB 2021-065

PLEASE RECYCLE

Project

CITY OF FERNLEY CRRC

Job No: 21-058.00

Owner

CITY OF FERNLEY

PROGRESS
NOT FOR CONSTRUCTION

50% CONSTRUCTION DOCUMENTS

REVISIONS		
REV	DATE	DESCRIPTION

Sheet Title

MECHANICAL LEGEND, NOTES, & AIR DISTRIBUTION

Date: MARCH 21, 2023

Sheet No:

M0.00

EXHAUST FAN SCHEDULE

SYMBOL	AREA SERVED	BID ALT	GREENHECK MODEL #	FAN FLOW (CFM)	EXTERNAL STATIC (INCH OF H_2O)	MOTOR HP & RPM	ELECTRICAL (VOLTS)	OPERATING WEIGHT (POUNDS)	ACCESSORIES
EF 1	105, 106, 109	BASE BID	CUE-095-VG	550	0.5	1/6 & 1579	115/1Φ	400	3, 4, 5, 7
EF 2	RR 129	BASE BID	SP-LP0511-1	50	0.1	N/A & 650	115/1Φ	30	1
EF 3	124, 125, 127	BASE BID	CSP-A390-VG	350	0.25	1/15 & 1581	115/1Φ	100	7,9
EF 4	119, 122	BASE BID	CSP-A125-VG	100	0.182	N/A & 980	115/1Φ	100	7,9
EF 5	KITCHEN RR	BASE BID	SP-LP0511-1	50	0.1	N/A & 650	115/1Φ	30	1
EF 6	FAMILY RR 112	BASE BID	SP-LP0511-1	50	0.1	N/A & 650	115/1Φ	30	1
EF 7	STAFF RR 138	ALT. A	SP-LP0511-1	50	0.1	N/A & 650	115/1Φ	30	1
EF 8	KIDS RR 146	ALT. A	SP-LP0511-1	50	0.1	N/A & 650	115/1Φ	30	1
EF 9	KIDS RR 144	ALT. A	SP-LP0511-1	50	0.1	N/A & 650	115/1Φ	30	1
EF 10	KIDS RR 140	ALT. A	SP-LP0511-1	50	0.1	N/A & 650	115/1Φ	30	1
EF 11	150, 151	ALT. B	CUE-095-VG	400	0.25	1/6 & 1124	115/1Φ	400	3, 4, 5, 7

NOTE: DATA HEREIN CORRECTED FOR 4,150 FOOT ELEVATION

ACCESSORIES:

1. BACKDRAFT DAMPER, GRAVITY OPERATED
2. BACKDRAFT DAMPER, MOTORIZED
3. BIRDSCREEN
4. DISCONNECT SWITCH, FACTORY MOUNTED
5. ROOF CURB, 12 INCH, INSULATED
6. ROOF CURB, 12 INCH, INSULATED, SLOPED TO MATCH ROOF
7. SOLID STATE SPEED CONTROL
8. UL-762, RESTAURANT EXHAUST
9. VIBRATION ISOLATION

MECH. EQUIP. SCHEDULE

ACO 1 ACI 1	DUCTLESS SPLIT SYSTEM - MDF 101 - BASE BID OUTDOOR UNIT 1.5 TON HEAT PUMP OUTDOOR UNIT. FURNISH WITH WIND BAFFLES FOR LOW AMBIENT CONTROL, BASIN HEATER, & HAIL GUARD. INDOOR UNIT 1.5 TON WALL-MOUNTED INDOOR UNIT. FURNISH WITH CONDENSATE PUMP.
ACO 2 ACI 2	DUCTLESS SPLIT SYSTEM - ELECTRICAL ROOM 103 - BASE BID OUTDOOR UNIT TRANE MITSUBISHI MODEL TRUZH030 2.5 TON HEAT PUMP OUTDOOR UNIT. FURNISH WITH WIND BAFFLES FOR LOW AMBIENT CONTROL, BASIN HEATER, & HAIL GUARD. INDOOR UNIT TRANE MITSUBISHI MODEL TPKA0A030 2.5 TON WALL-MOUNTED INDOOR UNIT. FURNISH WITH CONDENSATE PUMP.
ACO 3 ACI 3	DUCTLESS SPLIT SYSTEM - ELECTRICAL ROOM 137 - ALT. A OUTDOOR UNIT 1.5 TON HEAT PUMP OUTDOOR UNIT. FURNISH WITH WIND BAFFLES FOR LOW AMBIENT CONTROL, BASIN HEATER, & HAIL GUARD. INDOOR UNIT 1.5 TON WALL-MOUNTED INDOOR UNIT. FURNISH WITH CONDENSATE PUMP.
EWH 1	ELECTRIC WALL HEATER - MECHANICAL 102 - BASE BID W RADIANT ELECTRIC WALL HEATER, 120V/1PH, 1.5 KW WITH INTEGRAL THERMOSTAT.
EWH 2	ELECTRIC WALL HEATER - FIRE RISER 104 - BASE BID W RADIANT ELECTRIC WALL HEATER, 120V/1PH, 1.5 KW WITH INTEGRAL THERMOSTAT.
EWH 3	ELECTRIC WALL HEATER - ELECTRIC 103 - BASE BID W RADIANT ELECTRIC WALL HEATER, 120V/1PH, 1.5 KW WITH INTEGRAL THERMOSTAT.
DF 1	DESTRATIFICATION FAN - GYMNASIUM 149 - ALT. B BIG ASS FAN MODEL POWERFOIL X4.0 PX4-24 STANDARD (24' DIAMETER) VARIABLE SPEED INDUSTRIAL FAN WITH WINGLETS. MAX FAN SPEED 76 RPM. INPUT POWER 208V/1PH. OPERATING WEIGHT = 500LBS, COLOR SHALL BE STANDARD SILVER. CONTROLLER TO BE WIRED AND MOUNTED IN STORAGE 148. MOUNTING TO BAR JOIST. SEE STRUCTURAL DRAWINGS FOR INSTALLATION DETAIL. FURNISH W 'BIG FAN PACKAGE'.
DBF 1 DBF 2	DRYER BOOSTER FAN - LAUNDRY 134 - ALT. A TJERNLUND MODEL LB2 DRYER EXHAUST FAN, 120V 0.8A. MAX DUCT DISTANCE OF 120' AT 4,000 FT ELEVATION. 4" ROUND DUCT CONNECTION FOR INLET & OUTLET. FURNISH WITH ROOF CAP WITH BACKDRAFT DAMPER, TJERNLUND LT-4 LINT TRAP, HAWKEYE CURRENT SENSOR, AND NOTIFICATION PANEL.

ROOF TOP UNIT SCHEDULE

SYMBOL	AREA SERVED	TRANE MODEL #	UNIT SIZE	BID ALT	COOLING PERFORMANCE (MBH)		COOLING TEMPS		HEATING PERFORMANCE (MBH)		HEATING TEMPS		MINIMUM OA (CFM)	FAN (CFM)	EXTERNAL STATIC (INCHES OF H_2O)	ELECTRICAL			MINIMUM EER	OPERATING WEIGHT (POUNDS)	OPTIONS
					T.C.	S.C.	ENTERING	LEAVING	INPUT	OUTPUT	ENTERING	LEAVING				VOLTS	MCA	MOCP			
RTU 3	112 FAMILY RR, 113 ADMIN, 114 OFFICE	YHC037E4RLA	3 TON 17 SEER	BASE BID	29.2	24.67	80/62	54.5/51.5	50.4	40.32	64	108.7	100	1000	1	460/3Φ	12	15	13	1000	SEE BELOW
RTU 4	100 COR, 106 GN RR, 107 LOBBY	YHC047E4RMA	4 TON 17 SEER	BASE BID	44.4	39	80/62	58.6/53.7	67.2	53.8	60	91.5	300	1900	1	460/3Φ	14	20	13	1250	SEE BELOW
RTU 5	108 TEEN CTR, 109 GN RR	YHC072F4RYA	6 TON	BASE BID	62.3	44.1	80/62	51.6/51.2	126	102.1	58	95.2	485	2600	1	460/3Φ	22	30	12.6	1400	SEE BELOW
RTU 6	120 STORAGE, 121 CLASSROOM, 122 RR	YHC037E4RLA	3 TON 17 SEER	BASE BID	29.2	24.67	80/62	54.5/51.5	67.2	53.8	38	97.4	100	1100	1	460/3Φ	12	15	13	1000	SEE BELOW
RTU 7	123 CLASSROOM, 124 RR, 125 GEN RR	YHC047E4RHA	4 TON 17 SEER	BASE BID	40.68	34.12	80/62	58.2/53.5	100.8	80.64	22	89.5	450	1300	1	460/3Φ	14	20	13	1250	SEE BELOW
RTU 8	118 CLASSROOM, 119 RR	YHC037E4RZA	3 TON 17 SEER	BASE BID	30.6	26.4	80/62	57.1/52.9	67.2	53.8	38	87.6	455	1200	1	460/3Φ	12	15	13	1000	SEE BELOW
RTU 9	126 CLASSROOM, 127 RR	YHC047E4RHA	4 TON 17 SEER	BASE BID	40.68	34.12	80/62	58.2/53.5	100.8	80.64	22	89.5	450	1300	1	460/3Φ	14	20	13	1250	SEE BELOW
RTU 10	117 YOUTH GAME, 129 STAFF RR, 130 VEST	YHC072F4RYA	6 TON	BASE BID	61.15	61.15	80/62	56.5/55.1	100.8	81.65	61	93.4	425	2800	1	460/3Φ	22	30	12.6	1400	SEE BELOW
RTU 11	131 ENTRY, 132 RECPT, 136 OFFICE, 138 RR	4YCZ6024A1060A	2 TON 16 SEER	ALT. A	24	24	80/62	57.0/52.9	100	66.72	61	101	75	790	1	208/1Φ	12	15	13	450	SEE BELOW
RTU 12	128 STOR, 133 CORR, 134 LAUND, 135 KITCH	4YCZ6024A1060A	2 TON 16 SEER	ALT. A	24	24	80/62	57.0/52.9	48	38	57	97	130	790	1	208/1Φ	12	15	13	450	SEE BELOW
RTU 13	139 2-YR OLD, 140 KID RR	YHC047E4YA	4 TON 17 SEER	ALT. A	40.68	34.12	80/62	52.9/50.7	48	38	50	95.8	420	1200	1	460/3Φ	14	20	13	1250	SEE BELOW
RTU 14	141 INFANTS, 142 TODDLER	YHC067E4RHA	5 TON 17 SEER	ALT. A	49.1	42	80/62	54.4/51.6	109.2	87.4	38	94.8	815	1700	1	460/3Φ	15	20	13	1300	SEE BELOW
RTU 15	143 4-5 YR OLD, 144 KID RR	YHC037E4RYA	3 TON 17 SEER	ALT. A	31.14	27.15	80/62	58.3/53.5	67.2	53.8	45	90.8	460	1300	1	460/3Φ	12	15	13	1000	SEE BELOW
RTU 16	145 3 YR OLD, 146 KID RR	YHC037E4RYA	3 TON 17 SEER	ALT. A	31.14	27.15	80/62	58.3/53.5	67.2	53.8	45	90.8	460	1100	1	460/3Φ	12	15	13	1000	SEE BELOW
RTU 17	147 CORR, 148 STORAGE 150 W RR, 151 M RR	YHC037E4RYA	3 TON 17 SEER	ALT. A	31.14	27.15	80/62	58.3/53.5	67.2	53.8	55	90.8	300	1300	1	460/3Φ	14	20	13	1000	SEE BELOW
RTU 18	GYMNASIUM	YHJ180A4SAH	15 TON	ALT. B	150.3	99.25	80/62	49.9/49.4	336	272	40	88	2900	6000	1.24	460/3Φ	41	50	11.9	2600	SEE BELOW
RTU 19	GYMNASIUM	YHJ180A4SAH	15 TON	ALT. B	150.3	99.25	80/62	49.9/49.4	336	272	40	88	2900	6000	1.24	460/3Φ	41	50	11.9	2600	SEE BELOW

GENERAL NOTES:

1. ALL DATA DERATED FOR OPERATION AT 4,150 FT. ELEVATION.
2. COOLING CAPACITY BASED ON 100° F. AMBIENT.
3. VERIFY VOLTAGES AND AMPS PRIOR TO ORDERING EQUIPMENT.
4. DIVISION 26 TO FURNISH PRODUCTS OF COMBUSTION DETECTOR
5. ELECTRICALSERVICE SHALL BE THROUGH THE CURB.
6. OPERATING WEIGHT INCLUDES AN ALLOWANCE FOR SEISMIC ROOF CURB.
7. THERE ARE NO DDC REQUIREMENTS.

ACCESSORIES/FEATURES:

1. STAINLESS STEEL HEAT EXCHANGER
2. DRY BULB ECONOMIZER 0-100%
3. ALL UNIT SHALL HAVE POWER EXHAUST, EXCEPT RTU-11 & RTU-12 WHICH SHALL HAVE BAROMETRIC RELIEF
4. 2" FACTORY FILTER RACK WITH HINGED ACCESS PANEL AND MERV8 FILTERS
5. DISCONNECT FACTORY INSTALLED
6. UNPOWERED GFCI FACTORY INSTALLED/FIELD WIRED

DOAS (RTU) SCHEDULE

SYMBOL	AREA SERVED	CAPTIVEAIRE MODEL #	BID ALT	FAN (CFM)	MAX OA (CFM)	EXTERNAL STATIC (INCHES OF H_2O)	COOLING PERFORMANCE (MBH)		COOLING TEMPERATURES (°F)		MINIMUM IEER	HEATING PERFORMANCE (MBH)		HEATING TEMPERATURES (°F)		ELECTRICAL			OPERATING WEIGHT (POUNDS)	NOTES/ACCESSORIES
							T.C.	S.C.	ENTERING	LEAVING		INPUT	OUTPUT	ENTERING	LEAVING	VOLTS	MCA	MOCP		
RTU 1	KITCHEN	CASRTU2-I.200-18-8T	BASE BID	3500	1500	1	102	102	85.7/61.5	53.6/50	20.2	170	138	30	70	460/3Φ	48.8	60	2500	NOTES 1-8 ACCESSORIES 1-6
RTU 2	EVENTS CENTER	CASRTU3-I.250-24-12.5T	BASE BID	4500	2000	1.25	143.2	139.7	83/61.6	49/49	21.3	214	173	30	70	460/3Φ	68.8	80	3000	NOTES 1-6 ACCESSORIES 1-9

GENERAL NOTES:

1. PERFORMACE HAS BEEN DERATED FOR OPERATION AT 4,000 FT ELEVATION.
2. UNIT SHALL HAVE DOWN DISCHARGE & DOWN RETURN.
3. UNIT SHALL HAVE AN INVERTER SCROLL COMPRESSOR WITH INTEGRATED OIL SENSOR.
4. UNIT SHALL HAVE A DIRECT DRIVE PLENUM BLOWER.
5. CONDENSING FANS SHALL HAVE EC MOTORS.
6. UNIT SHALL HAVE AN ELECTRONIC EXPANSION VALVE.
7. UNIT SHALL HAVE 2" EXTERIOR DUAL-WALL CONSTRUCTION W/ R-13 INSULATION-MINIMUM 20GA EXTERIOR W/ 14GA BASE.
8. THE FURNACE SECTION SHALL HAVE AN 81% EFFICIENT FURNACE, WITH MODULATING INDUCER TO MAINTAIN CONSTANT COMBUSTION EFFICIENCY ACROSS FIRING RANGE. 6:1 TURNDOWN WITH NG AND 5:1 TURNDOWN WITH LP

ACCESSORIES/FEATURES

1. SEISMIC ROOF CURB - UNIT SHALL BE 14" MINIMUM ABOVE FINISHED ROOF
2. INTEGRATED MONITORING VIA CELLULAR CONNECTION BY MANUFACTURER
3. REFRIGERATION PRESSURE MONITORING ON HIGH AND LOW PRESSURE SIDE OF SYSTEM INCLUDED THROUGH DIGITAL INTERFACE
4. SUCTION LINE ACCUMULATOR
5. AVERAGING INTAKE, EVAP AND DISCHARGE TEMPERATURE SENSORS (DISCHARGE SENSOR TO BE FACTORY MOUNTED WITHIN UNIT)
6. SUPPLY CFM MONITORING INTEGRAL TO UNIT WITH CFM MEASUREMENT INCLUDED THROUGH DIGITAL INTERFACE
7. FULLY MODULATING HOT GAS REHEAT
8. 15 DEGREE LOW AMBIENT OPERATION
9. REFRIGERATION PRESSURE MONITORING ON HIGH AND LOW PRESSURE SIDE OF SYSTEM INCLUDED THROUGH DIGITAL INTERFACE

KITCHEN EXHAUST FAN SCHEDULE

SYMBOL	CAPTIVEAIRE MODEL #	BID ALT	CFM	ESP	RPM	MOTOR ENCLOSURE	HP	BHP	PHASE	VOLT	FLA	DISCHARGE VELOCITY	WEIGHT (LBS)	SONES
KEF 1	DU180HFA	BASE BID	3000	1.6	1446	ODP, PREMIUM	3	1.86	3	208	9.5	762 FPM	300	24.5

NOTES:

1. GREASE BOX
2. FAN BASE CERAMIC SEAL - FACTORY INSTALLED - FOR GREASE DUCTS
3. EXHAUST FAN HEAT BAFFLE
4. 2 YEAR PARTS WARRANTY

tsk

225 South Arlington Avenue
Reno NV, 89501
phone: 775.857.2949
fax: 775.857.2403
www.tska.com

THESE DRAWINGS AND SPECIFICATIONS ARE THE PROPERTY OF TATE SNYDER KIMSEY ARCHITECTS AND MAY NOT BE REPRODUCED OR USED FOR ANY PURPOSE WITHOUT THE ARCHITECTS WRITTEN CONSENT. AS INSTRUMENTS OF SERVICE, THESE DOCUMENTS ARE NOT FINAL AND READY FOR USE, AND THEREFORE NOT VALID, UNLESS THEY ARE SEALED, SIGNED AND DATED.

Copyright, Ltd 2023

Consultant

AINSWORTH ASSOCIATES
MECHANICAL ENGINEERS
1420 HOLCOMB AVE., SUITE 201
RENO, NV 89502
TEL: 775-329-9100
4557 GREENVIEW DR.
EL DORADO HILLS, CA 95762
TEL: 916-737-6014
www.aa-me.com

JOB 2021-065

PLEASE RECYCLE

Project

CITY OF FERNLEY CRRC

Job No: 21-058.00

Owner

CITY OF FERNLEY

PROGRESS NOT FOR CONSTRUCTION

50% CONSTRUCTION DOCUMENTS

REVISIONS		
REV	DATE	DESCRIPTION

Sheet Title

MECHANICAL EQUIPMENT SCHEDULES

Date: MARCH 21, 2023

Sheet No:

M0.01

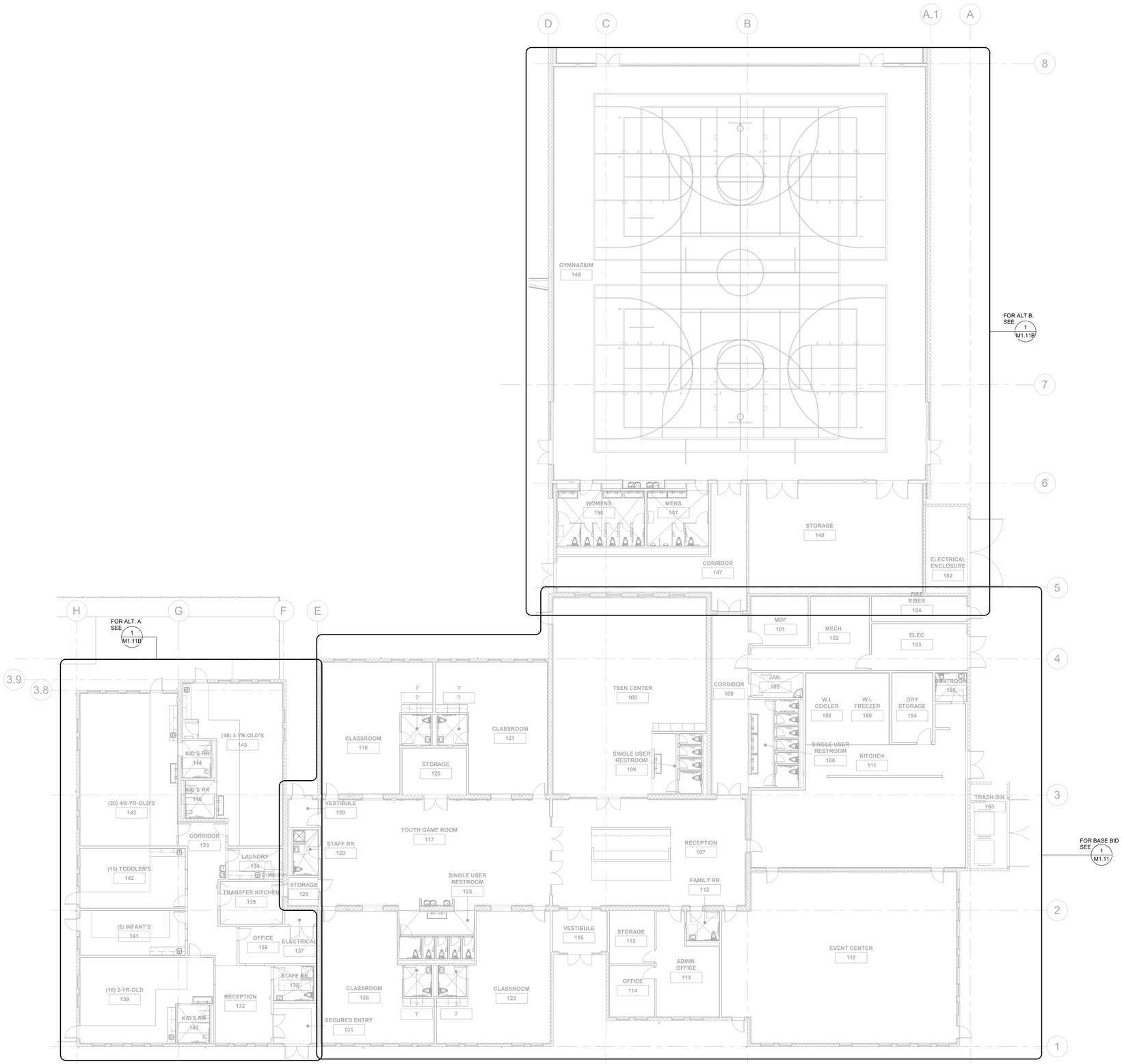

MECHANICAL OVERALL FLOOR PLAN - GYMNASIUM 1 M1.01

SCALE: 3/32" = 1'-0"

N

tsk
225 South Arlington Avenue
Reno NV, 89501
phone: 775.857.2949
fax: 775.857.2403
www.tska.com

THESE DRAWINGS AND SPECIFICATIONS ARE THE PROPERTY OF TATE SNYDER KIMSEY ARCHITECTS AND MAY NOT BE REPRODUCED OR USED FOR ANY PURPOSE WITHOUT THE ARCHITECTS WRITTEN CONSENT. AS INSTRUMENTS OF SERVICE, THESE DOCUMENTS ARE NOT FINAL AND READY FOR USE, AND THEREFORE NOT VALID, UNLESS THEY ARE SEALED, SIGNED AND DATED.

Copyright, Ltd 2023

Consultant

AINSWORTH ASSOCIATES
MECHANICAL ENGINEERS
1420 HOLCOMB AVE., SUITE 201
RENO, NV 89502
TEL: 775-329-9100
4557 GREENVIEW DR.
EL DORADO HILLS, CA 95762
TEL: 916-737-6014
www.aa-me.com
JOB 2021-065

PLEASE RECYCLE

Project

CITY OF FERNLEY
CRRC

Job No: 21-058.00

Owner

CITY OF FERNLEY

PROGRESS
NOT FOR CONSTRUCTION

50% CONSTRUCTION DOCUMENTS

REVISIONS		
REV	DATE	DESCRIPTION

Sheet Title

MECHANICAL OVERALL FLOOR PLAN

Date: MARCH 21, 2023

Sheet No:

M1.01

DRAWING NOTES

FOR MORE INFORMATION ON THE EQUIPMENT TO SERVE HVAC NEEDS OF THE KITCHEN AND CAFETERIA SEE M5 SERIES DRAWINGS.

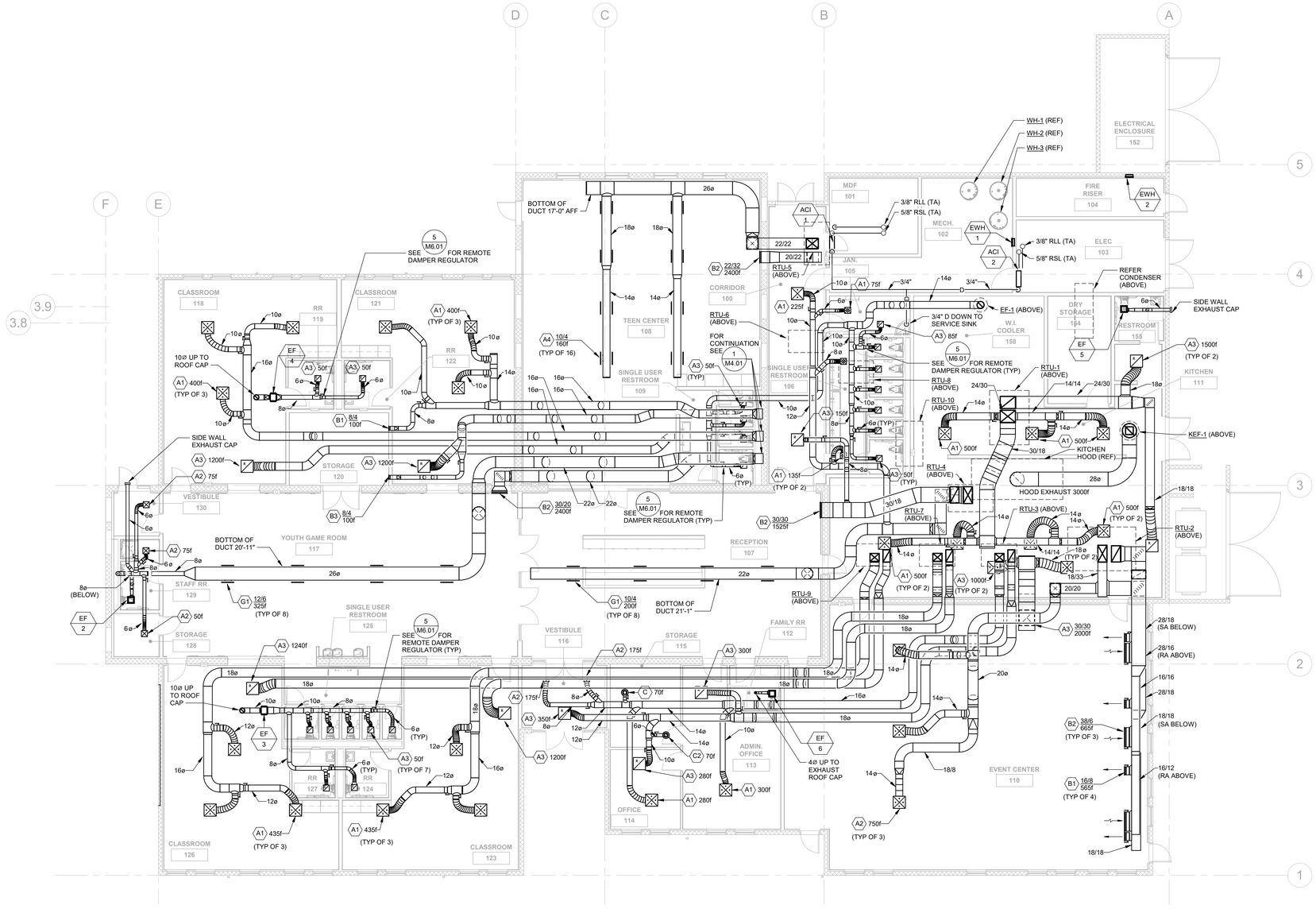

MECHANICAL PARTIAL FLOOR PLAN - BASE BID

1 / M1.11

SCALE: 1/8" = 1'-0"

N

tsk

225 South Arlington Avenue
Reno NV, 89501
phone: 775.857.2949
fax: 775.857.2403
www.tska.com

THESE DRAWINGS AND SPECIFICATIONS ARE THE PROPERTY OF TATE SNYDER KIMSEY ARCHITECTS AND MAY NOT BE REPRODUCED OR USED FOR ANY PURPOSE WITHOUT THE ARCHITECTS WRITTEN CONSENT. AS INSTRUMENTS OF SERVICE, THESE DOCUMENTS ARE NOT FINAL AND READY FOR USE, AND THEREFORE NOT VALID, UNLESS THEY ARE SEALED, SIGNED AND DATED.

Copyright, Ltd 2023

Consultant

AINSWORTH ASSOCIATES
MECHANICAL ENGINEERS
1420 HOLCOMB AVE., SUITE 201
RENO, NV 89502
TEL: 775-329-9100
4557 GREENVIEW DR.
EL DORADO HILLS, CA 95762
TEL: 916-737-6014
www.aa-me.com

JOB 2021-065

PLEASE RECYCLE

Project

CITY OF FERNLEY CRRC

Job No: 21-058.00

Owner

CITY OF FERNLEY

PROGRESS
NOT FOR CONSTRUCTION

50% CONSTRUCTION DOCUMENTS

REVISIONS		
REV	DATE	DESCRIPTION

Sheet Title

MECHANICAL PARTIAL FLOOR PLAN - BASE BID

Date: MARCH 21, 2023

Sheet No:

M1.11

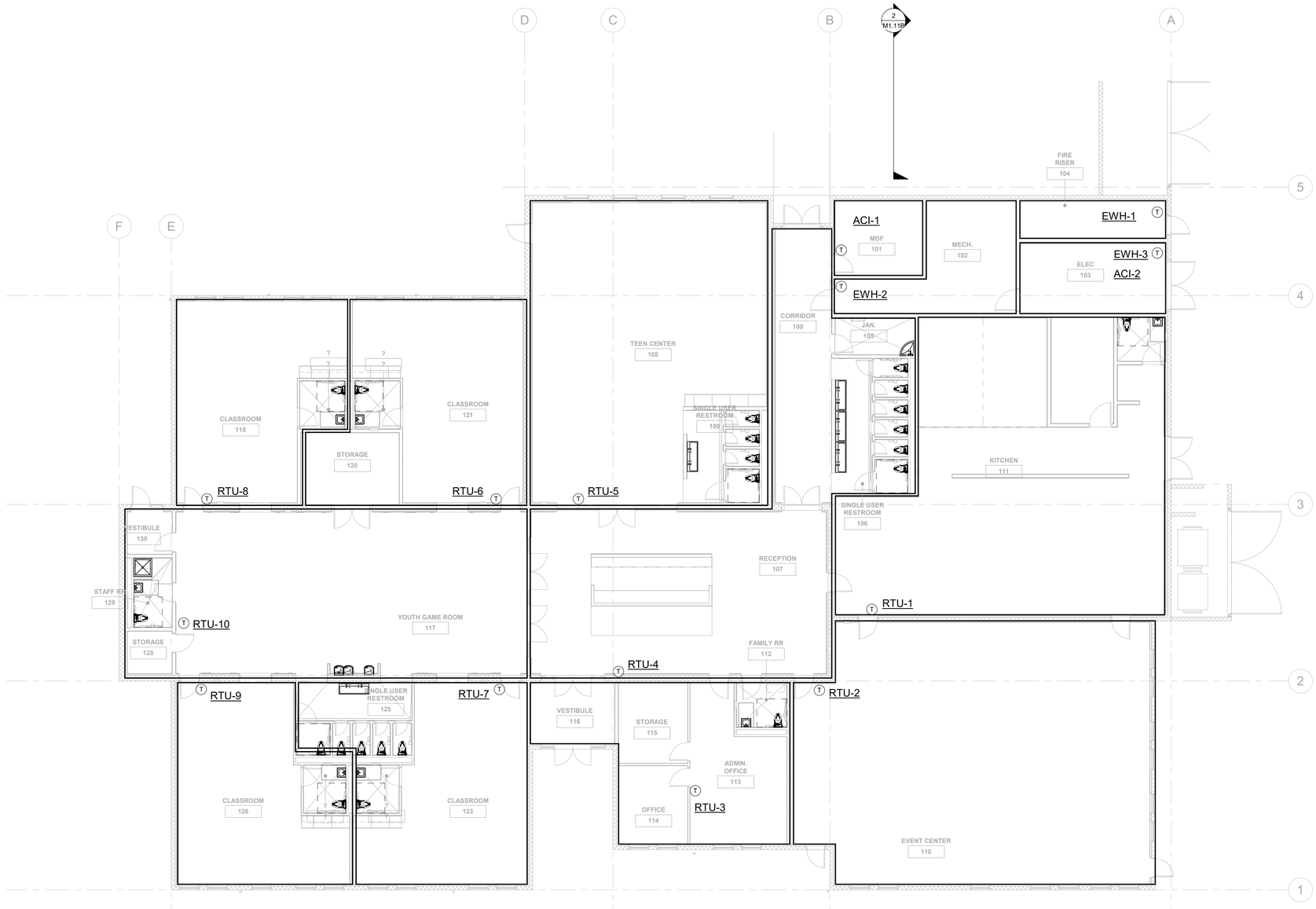

MECHANICAL PARTIAL ZONING PLAN - BASE BID

1 / M2.1

SCALE: 1/8" = 1'-0"

N

tsk
225 South Arlington Avenue
Reno NV, 89501
phone: 775.857.2949
fax: 775.857.2403
www.tska.com

THESE DRAWINGS AND SPECIFICATIONS ARE THE PROPERTY OF TATE SNYDER KIMSEY ARCHITECTS AND MAY NOT BE REPRODUCED OR USED FOR ANY PURPOSE WITHOUT THE ARCHITECTS WRITTEN CONSENT.
AS INSTRUMENTS OF SERVICE, THESE DOCUMENTS ARE NOT FINAL AND READY FOR USE, AND THEREFORE NOT VALID, UNLESS THEY ARE SEALED, SIGNED AND DATED.

Copyright, Ltd 2023

Consultant

AINSWORTH ASSOCIATES
MECHANICAL ENGINEERS
1420 HOLCOMB AVE., SUITE 201
RENO, NV 89502
TEL: 775-329-9100
4557 GREENVIEW DR.
EL DORADO HILLS, CA 95762
TEL: 916-737-6014
www.aa-me.com

JOB 2021-065

PLEASE RECYCLE

Project

CITY OF FERNLEY CRRC

Job No: 21-058.00

Owner

CITY OF FERNLEY

PROGRESS
NOT FOR CONSTRUCTION

50% CONSTRUCTION DOCUMENTS

REVISIONS		
REV	DATE	DESCRIPTION

Sheet Title

MECHANICAL PARTIAL ZONING PLAN - BASE BID

Date: MARCH 21, 2023

Sheet No:

M2.1

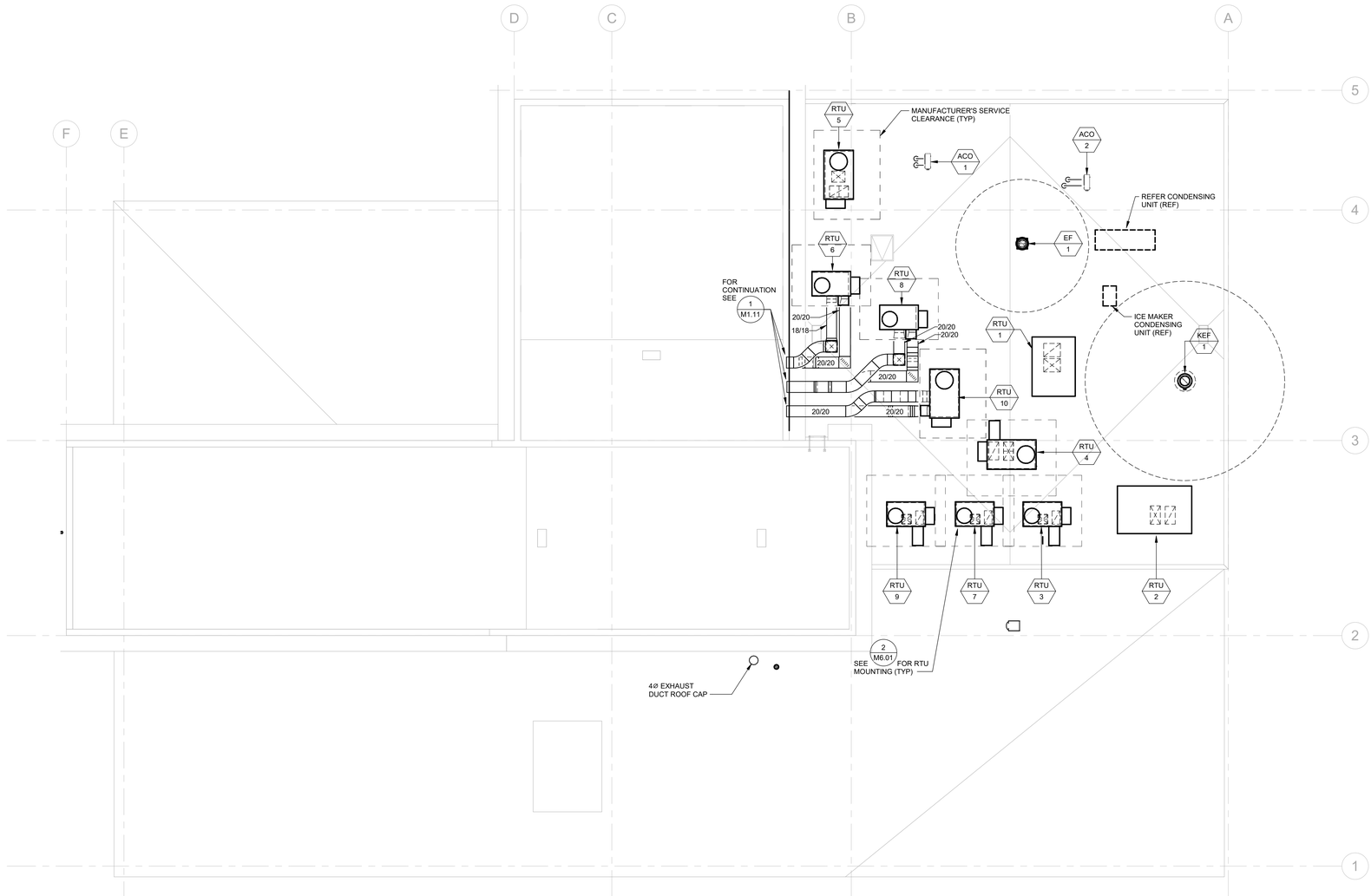

MECHANICAL PARTIAL ROOF PLAN - BASE BID (1 / M4.01)

SCALE: 1/8" = 1'-0"

N

tsk
225 South Arlington Avenue
Reno NV, 89501
phone: 775.857.2949
fax: 775.857.2403
www.tska.com

THESE DRAWINGS AND SPECIFICATIONS ARE THE PROPERTY OF TATE SNYDER KIMSEY ARCHITECTS AND MAY NOT BE REPRODUCED OR USED FOR ANY PURPOSE WITHOUT THE ARCHITECTS WRITTEN CONSENT. AS INSTRUMENTS OF SERVICE, THESE DOCUMENTS ARE NOT FINAL AND READY FOR USE, AND THEREFORE NOT VALID, UNLESS THEY ARE SEALED, SIGNED AND DATED.

Copyright, Ltd 2023

Consultant

AINSWORTH ASSOCIATES
MECHANICAL ENGINEERS
1420 HOLCOMB AVE., SUITE 201
RENO, NV 89502
TEL: 775-329-9100
4557 GREENVIEW DR.
EL DORADO HILLS, CA 95762
TEL: 916-737-6014
www.aa-me.com
JOB 2021-065

PLEASE RECYCLE

Project

CITY OF FERNLEY
CRRC

Job No: 21-058.00

Owner

CITY OF FERNLEY

PROGRESS
NOT FOR CONSTRUCTION

50% CONSTRUCTION DOCUMENTS

REVISIONS		
REV	DATE	DESCRIPTION

Sheet Title

MECHANICAL PARTIAL ROOF PLAN - BASE BID

Date: MARCH 21, 2023

Sheet No:

M4.01

FOR QUESTIONS, CALL THE
Northern Nevada Mechanical
REGION 113
PHONE: (775) 236-5843
EMAIL: reg113@captiveaire.com

EXHAUST FAN INFORMATION – JOB#5896855

FAN UNIT NO	TAG	QTY	FAN UNIT MODEL #	MANUFACTURER	CFM	ESP	RPM	MOTOR ENCL	HP	BHP	PHASE	VOLT	FLA	DISCHARGE VELOCITY	WEIGHT (LBS)	SONES
1	KEF-1	1	DU180HFA	CAPTIVEAIRE	3000	2.000	1513	ODP,PREMIUM	3.000	2.0740	3	208	9.5	693 FPM	202	25.5

REVISIONS

	DESCRIPTION	DATE
△		
△		
△		
△		

CAPTIVEAIRE

Northern Nevada Mechanical
P.O. Box 17489, Reno, NV. 89511 PHONE: (775) 236-5843 FAX: (919) 516-8720 EMAIL: reg113@captiveaire.com
www.captiveaire.com

Fernley Community Center R2
FERNLEY, NV, 89408

DATE: 3/16/2023

DWG.#:
5896855

DRAWN BY: Region 113

SCALE:
3/4" = 1'-0"

MASTER DRAWING

SHEET NO.
1

tsk
225 South Arlington Avenue
Reno NV, 89501
phone: 775.857.2949
fax: 775.857.2403
www.tska.com

THESE DRAWINGS AND SPECIFICATIONS ARE THE PROPERTY OF TATE SNYDER KIMSEY ARCHITECTS AND MAY NOT BE REPRODUCED OR USED FOR ANY PURPOSE WITHOUT THE ARCHITECTS WRITTEN CONSENT. AS INSTRUMENTS OF SERVICE, THESE DOCUMENTS ARE NOT FINAL AND READY FOR USE, AND THEREFORE NOT VALID, UNLESS THEY ARE SEALED, SIGNED AND DATED.

Copyright, Ltd 2023

Consultant

AINSWORTH ASSOCIATES
MECHANICAL ENGINEERS
1420 HOLCOMB AVE., SUITE 201
RENO, NV 89502
TEL: 775-329-9100
4557 GREENVIEW DR.
EL DORADO HILLS, CA 95762
TEL: 916-737-6014
www.aa-me.com

JOB 2021-065

PLEASE RECYCLE

Project
CITY OF FERNLEY CRRC

Job No: 21-058.00

Owner
CITY OF FERNLEY

PROGRESS
NOT FOR CONSTRUCTION

50% CONSTRUCTION DOCUMENTS

REVISIONS		
REV	DATE	DESCRIPTION

Sheet Title
CAPTIVEAIRE PLANS

Date: MARCH 21, 2023
Sheet No:

M5.01

DOAS/RTU FAN SCHEDULE - JOB#5896855

FAN UNIT NO	TAG	QTY	DOAS/RTU MODEL #	MANUFACTURER	BLOWER	FAN INFORMATION: RETURN AIR CFM	MAX OUTSIDE AIR CFM	TOTAL CFM	WEIGHT (LBS)	ESP	ELECTRICAL INFORMATION: HP	PHASE	VOLT	MCA	MOCP	COOLING INFORMATION: OUTSIDE AIR DB	OUTSIDE AIR WB	MIXED AIR DB	MIXED AIR WB	LEAVING AIR DB	LEAVING AIR WB	LEAVING AIR DP	CAPACITY TOTAL	CAPACITY SENS	IEER	ISMRE	REHEAT INFORMATION: DISCHARGE DB	CAPACITY DESIRED	CAPACITY MAX	MOISTURE REMOVAL RATE	GAS HEAT INFORMATION: GAS TYPE	INPUT BTUh	OUTPUT BTUh	TEMP RISE	REQUIRED INPUT GAS PRESSURE	NOTES
2	RTU-1	1	CASRTU2-1200-18-BT	CAPTIVEAIRE	18HF-2-RTU	2000	1500	3500	1942	1.000	5.00	3	208	48.8A	60A	96.0°F	61.0°F	84.0°F	61.6°F	52.1°F	50.1°F	48.8°F	101.9 MBH	101.9 MBH	20.2	9.8	68.3°F	59.1°F	55 MBH	60 MBH	0 LBS/HR	NATURAL	167296	135510	40°F	7 IN. W.C. - 14 IN. W.C.	1,2,3,4,5,6,7,8,9,10,11,12,13,14,15
3	RTU-2	1	CASRTU3-1250-24-12.5T	CAPTIVEAIRE	24HF-3-RTU	2800	1700	4500	2507	1.250	5.00	3	208	68.8A	80A	96.0°F	61.0°F	83.0°F	61.6°F	49.0°F	49.0°F	49.1°F	143.2 MBH	139.7 MBH	21.3	4.1	70.0°F	58.7°F	92.1 MBH	101 MBH	3.2 LBS/HR	NATURAL	213746	173134	40°F	7 IN. W.C. - 14 IN. W.C.	1,2,3,4,5,6,7,8,9,10,11,12,13,14,15,16,17

NOTES:
1. INVERTER SCROLL COMPRESSOR WITH INTEGRATED OIL SENSOR. DIGITAL OR STAGED SCROLL NOT AN APPROVED EQUAL
2. DIRECT DRIVE PLENUM BLOWER. BELT DRIVEN BLOWERS ARE NOT ACCEPTABLE
3. INTEGRATED MONITORING VIA CELLULAR CONNECTION BY MANUFACTURER
4. REFRIGERATION PRESSURE MONITORING ON HIGH AND LOW PRESSURE SIDE OF SYSTEM INCLUDED THROUGH DIGITAL INTERFACE
5. EC MOTOR CONDENSING FANS
6. ELECTRONIC EXPANSION VALVE. TXV NOT ACCEPTABLE
7. SUCTION LINE ACCUMULATOR
8. FACTORY COMMISSIONING WITH 5 YEAR PARTS WARRANTY, 25 YEAR WARRANTY ON STAINLESS STEEL HEAT EXCHANGER
9. AVERAGING INTAKE, EVAP AND DISCHARGE TEMPERATURE SENSORS (DISCHARGE SENSOR TO BE FACTORY MOUNTED WITHIN UNIT)
10. 2" EXTERIOR DUAL-WALL CONSTRUCTION W/ R-13 INSULATION-MINIMUM 20GA EXTERIOR W/ 14GA BASE
11. 81% EFFICIENT FURNACE, WITH MODULATING INDUCER TO MAINTAIN CONSTANT COMBUSTION EFFICIENCY ACROSS FIRING RANGE. 6:1 TURNDOWN WITH NG AND 5:1 TURNDOWN WITH LP
12. SUPPLY CFM MONITORING INTEGRAL TO UNIT WITH CFM MEASUREMENT INCLUDED THROUGH DIGITAL INTERFACE
13. FULL MODULATING ELECTRIC REHEAT
14. 0°F DESIGN LOW AMBIENT OPERATION
15. DOWN DISCHARGE/DOWN RETURN
16. HAIL GUARD FOR CONDENSING COIL
17. BAROMETRIC RELIEF DAMPER

FAN OPTIONS

FAN UNIT NO	TAG	QTY	DESCRIPTION
1	KEF-1	1	GREASE BOX
		1	FAN BASE CERAMIC SEAL - INSTALLED AT PLANT - FOR GREASE DUCTS
		1	EXHAUST FAN HEAT BAFFLE
		1	VAV PACKAGE W/ MANUAL CONTROL (VFD INCLUDED)
		1	VFD FACTORY MOUNTED AND WIRED IN EXHAUST FAN
		1	VFD MOUNTING BRACKET FOR DU/DR 180 - 200
		1	2 YEAR PARTS WARRANTY
2	RTU-1	1	INLET PRESSURE GAUGE, 0-35"
		1	MANIFOLD PRESSURE GAUGE, 0 TO 10" WC, 1 FURNACE
		1	RTU TOTAL CFM MONITORING
		1	SHIP LOOSE GAS STRAINER 3/4"
		1	SINGLE POINT ELECTRICAL CONNECTION FOR RTU, 750VA TRANSFORMER (USED. IF A NON-DCV PREWIRE CONTROLS THIS UNIT, THE #28, #47, "MA", OR "E2" PREWIRE OPTION MUST BE SELECTED. DOES NOT PROVIDE SUPPLY STARTER IN PREWIRE
		1	CASLINK BUILDING MONITORING SYSTEM - INTERNET OR CELLULAR CONNECTION REQUIRED
		1	LOW AMBIENT COOLING OPERATION - DOWN TO 0F AMBIENT
		1	RTU2 DOWN DISCHARGE
		1	2" MERV 13 FILTERS FOR RTU2 (QTY. 4)
		1	2" MERV 8 FILTERS FOR RTU2 (QTY. 4)
		1	OVERHEAT STAT
		1	VFD FACTORY MOUNTED AND WIRED IN RTU COMMERCIAL CONTROL VESTIBULE
		1	SPECIAL ORIFICES FOR 3" HEATERS ABOVE 2,000'
		1	8 TON MODULATING COOLING OPTION, 208/230V. R410A REFRIGERANT, VARIABLE SPEED COMPRESSOR, ECM CONDENSING FANS
		1	8 TON MODULATING REHEAT OPTION - SPACE DEWPOINT CONTROL
		1	REMOTE TEMPERATURE AND HUMIDITY SPACE SENSOR
		1	RTU SIZE 2 INTAKE HOOD, SHIPPED LOOSE
		1	RTU2 CURB DUCT HANGER
		1	DUCT MOUNTED SMOKE DETECTOR - SHIPS LOOSE
		1	CLOGGED FILTER SWITCH - NOTIFICATION ON HMI
		1	RTU2 DOWN RETURN
		1	VAV PACKAGE W/ MANUAL/DDC CONTROL (57) VFD INCLUDED)
		1	OCCUPIED SCHEDULING
		1	FREEZESTAT
		1	RTU INTAKE/RETURN DAMPER CONTROL TO CONTROL BOARD - ANALOG 0-10V
		1	5 YEAR ENTIRE UNIT PARTS WARRANTY, 10 YEAR ENTIRE UNIT PARTS WARRANTY WITH REMOTE MONITORING AND CAPTIVEAIRE SERVICE CONTRACT, 25 YEAR STAINLESS STEEL FURNACE PARTS WARRANTY (SEE ADDITIONAL DETAILS)
3	RTU-2	1	INLET PRESSURE GAUGE, 0-35"
		1	MANIFOLD PRESSURE GAUGE, 0 TO 10" WC, 1 FURNACE
		1	RTU TOTAL CFM MONITORING
		1	SHIP LOOSE GAS STRAINER 1"
		1	SINGLE POINT ELECTRICAL CONNECTION FOR RTU, 750VA TRANSFORMER (USED. IF A NON-DCV PREWIRE CONTROLS THIS UNIT, THE #28, #47, "MA", OR "E2" PREWIRE OPTION MUST BE SELECTED. DOES NOT PROVIDE SUPPLY STARTER IN PREWIRE
		1	CASLINK BUILDING MONITORING SYSTEM - INTERNET OR CELLULAR CONNECTION REQUIRED
		1	LOW AMBIENT COOLING OPERATION - DOWN TO 0F AMBIENT
		1	RTU3 DOWN DISCHARGE
		2	2" MERV 13 FILTERS FOR RTU3 (QTY. 4)
		1	2" MERV 8 FILTERS FOR RTU3 (QTY. 4)
		1	OVERHEAT STAT
		1	VFD FACTORY MOUNTED AND WIRED IN RTU COMMERCIAL CONTROL VESTIBULE
		1	SPECIAL ORIFICES FOR 3" HEATERS ABOVE 2,000'
		1	12.5 TON MODULATING COOLING OPTION, 208/230V. R410A REFRIGERANT, VARIABLE SPEED COMPRESSOR, ECM CONDENSING FANS
		1	12.5 TON MODULATING REHEAT OPTION - SPACE DEWPOINT CONTROL
		1	REMOTE TEMPERATURE AND HUMIDITY SPACE SENSOR
		1	RTU SIZE 3 INTAKE HOOD, SHIPPED LOOSE
		1	RTU3 CURB DUCT HANGER
		1	FREEZESTAT
		1	OCCUPIED SCHEDULING
		1	RTU RETURN MOUNTED SMOKE DETECTOR AND SAMPLING TUBE - FACTORY INSTALLED
		1	CLOGGED FILTER SWITCH - NOTIFICATION ON HMI
		1	RTU INTAKE/RETURN DAMPER - MANUAL CONTROL VIA HMI
		1	DAMPER PRESET POSITIONS
		1	VAV PACKAGE W/ MANUAL/DDC CONTROL (57) VFD INCLUDED)
		1	RTU3 DOWN RETURN
		1	RTU3 ECONOMIZER BAROMETRIC RELIEF
		1	RTU3 HAIL GUARD
		1	5 YEAR ENTIRE UNIT PARTS WARRANTY, 10 YEAR ENTIRE UNIT PARTS WARRANTY WITH REMOTE MONITORING AND CAPTIVEAIRE SERVICE CONTRACT, 25 YEAR STAINLESS STEEL FURNACE PARTS WARRANTY (SEE ADDITIONAL DETAILS)

FAN #1 DU80MFA - EXHAUST FAN (KEF-1)

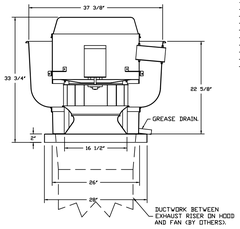

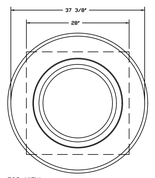

TOP VIEW

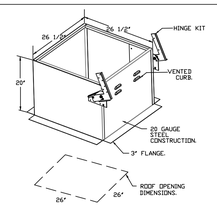

FEATURES:

- DIRECT DRIVE CONSTRUCTION (NO BELTS/PULLEYS).
- ROOF MOUNTED FANS.
- RESTAURANT MODEL.
- UL705 AND UL762 AND ULC-S645
- VARIABLE SPEED CONTROL.
- INTERNAL WIRING.
- THERMAL OVERLOAD PROTECTION (SINGLE PHASE).
- HIGH TEMPERATURE OPERATION 300°F (149°C).
- GREASE CLASSIFICATION TESTING.
- NEMA 3R SAFETY DISCONNECT SWITCH.

NORMAL TEMPERATURE TEST
EXHAUST FAN MUST OPERATE CONTINUOUSLY WHILE EXHAUSTING AIR AT 300°F (149°C) UNTIL ALL FAN PARTS HAVE REACHED THERMAL EQUILIBRIUM, AND WITHOUT ANY DETERIORATING EFFECTS TO THE FAN WHICH WOULD CAUSE UNSAFE OPERATION.

ABNORMAL FLAME-UP TEST
EXHAUST FAN MUST OPERATE CONTINUOUSLY WHILE EXHAUSTING BURNING GREASE VAPORS AT 600°F (316°C) FOR A PERIOD OF 15 MINUTES WITHOUT THE FAN BECOMING DAMAGED TO ANY EXTENT THAT COULD CAUSE AN UNSAFE CONDITION.

OPTIONS
- GREASE BOX.
- FAN BASE CERAMIC SEAL - INSTALLED AT PLANT - FOR GREASE DUCTS.
- EXHAUST FAN HEAT BAFFLE.
- VAV PACKAGE W/ MANUAL CONTROL (VFD INCLUDED).
- VFD FACTORY MOUNTED AND WIRED IN EXHAUST FAN.
- VFD MOUNTING BRACKET FOR DU/DR 180 - 200.
- 2 YEAR PARTS WARRANTY.

FAN#1 (KEF-1) - EXHAUST PERFORMANCE CURVES.

3000 CFM, 2 SP @ 1513 RPM AND 2.674 BHP AT 4154 FEET AND 120 DEG F.
* PLEASE NOTE THAT THESE CURVES WERE ADJUSTED FOR JOB SPECIFIC TEMPERATURE AND ALTITUDE.

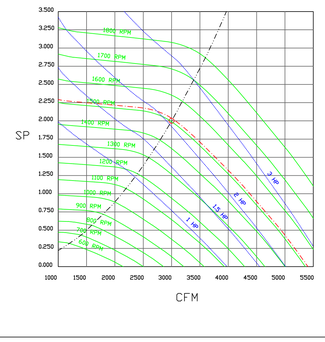

FAN ACCESSORIES

FAN UNIT NO	TAG	EXHAUST: GREASE CUP	EXHAUST: GRAVITY DAMPER	EXHAUST: WALL MOUNT	SUPPLY: SIDE DISCHARGE	SUPPLY: GRAVITY DAMPER	SUPPLY: MOTORIZED DAMPER	SUPPLY: WALL MOUNT
1	KEF-1	YES						

CURB ASSEMBLIES

NO	ON FAN	TAG	WEIGHT	ITEM	SIZE
1	# 1	KEF-1	37 LBS	CURB	26.500"W X 26.500"L X 20.000"H ALONG LENGTH, RIGHT VENTED HINGED.
2	# 2	RTU-1	107 LBS	CURB	49.500"W X 75.000"L X 14.000"H ALONG WIDTH, RIGHT INSULATED.
3	# 3	RTU-2	171 LBS	CURB	59.500"W X 95.000"L X 14.000"H ALONG WIDTH, RIGHT INSULATED.

REVISIONS

	DESCRIPTION	DATE:
1		
2		
3		
4		

CAPTIVEAIRE
Northern Nevada Mechanical
P.O. Box 17489, Reno, NV, 89511 PHONE: (775) 358-5843 FAX: (919) 516-8720 EMAIL: reg113@captiveaire.com
www.captiveaire.com

Fernley Community Center R2
FERNLEY, NV, 89408

DATE: 3/16/2023

DWG.#: 5896855

DRAWN BY: Region 113

SCALE: 1/2" = 1'-0"

MASTER DRAWING

SHEET NO. 2

tsk
225 South Arlington Avenue
Reno NV, 89501
phone: 775.857.2949
fax: 775.857.2403
www.tska.com

THESE DRAWINGS AND SPECIFICATIONS ARE THE PROPERTY OF TATE SNYDER KIMSEY ARCHITECTS AND MAY NOT BE REPRODUCED OR USED FOR ANY PURPOSE WITHOUT THE ARCHITECTS WRITTEN CONSENT. AS INSTRUMENTS OF SERVICE, THESE DOCUMENTS ARE NOT FINAL AND READY FOR USE, AND THEREFORE NOT VALID, UNLESS THEY ARE SEALED, SIGNED AND DATED.

Copyright, Ltd 2023

Consultant

AINSWORTH ASSOCIATES
MECHANICAL ENGINEERS
1420 HOLCOMB AVE., SUITE 201
RENO, NV 89502
TEL: 775-329-9100
4557 GREENVIEW DR.
EL DORADO HILLS, CA 95762
TEL: 916-737-6014
www.aa-me.com

JOB: 2021-065

PLEASE RECYCLE

Project

CITY OF FERNLEY CRRC

Job No: 21-058.00

Owner

CITY OF FERNLEY

PROGRESS
NOT FOR CONSTRUCTION

50% CONSTRUCTION DOCUMENTS

REVISIONS		
REV	DATE	DESCRIPTION

Sheet Title

CAPTIVEAIRE PLANS

Date: MARCH 21, 2023

Sheet No:

M5.02

FAN #2 CASRTU2-I.200-18MF-8T - HEATER (RTU-1)

NOTES:

1. DO NOT OBSTRUCT OUTSIDE AIR INLET, OUTSIDE AIR COIL OR OUTSIDE AIR FAN.
2. ( ) DENOTES CORNER WEIGHT.
3. ROOF OPENING MUST BE 2" SMALLER THAN CURB DIMENSIONS IN BOTH DIRECTIONS.

*NOTE: SUPPLY DUCT MUST BE INSTALLED TO MEET SMACNA STANDARDS. A MINIMUM STRAIGHT DUCT LENGTH MUST BE MAINTAINED DOWNSTREAM OF UNIT DISCHARGE AS OUTLINED IN AMCA PUBLICATION 201. WHEN USING RECTANGULAR DUCTWORK, ELBOWS MUST BE RADIUS THROAT, RADIUS BACK WITH TURNING VANES. FLEXIBLE DUCTWORK AND SQUARE THROAT/SQUARE BACK ELBOWS SHOULD NOT BE USED. ANY TRANSITION AND/OR TURNS IN THE DUCTWORK WILL CAUSE SYSTEM EFFECT. SYSTEM EFFECT WILL DRASTICALLY INCREASE STATIC PRESSURE AND REDUCE AIRFLOW. DO NOT RELY ON UNIT TO SUPPORT DUCT IN ANY WAY. FAILURE TO PROPERLY SIZE DUCTWORK MAY CAUSE SYSTEM EFFECTS AND REDUCE PERFORMANCE OF THE EQUIPMENT.
SUGGESTED STRAIGHT DUCT SIZE IS 20.5" x 30.25".

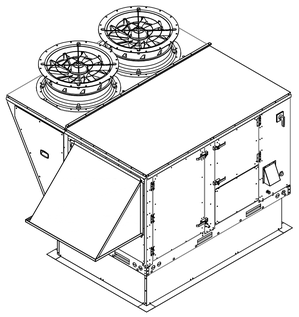

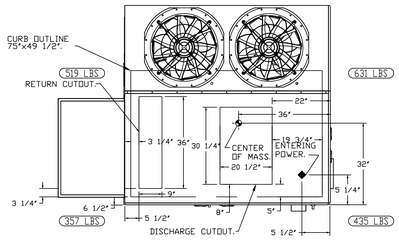

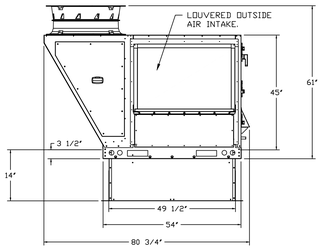

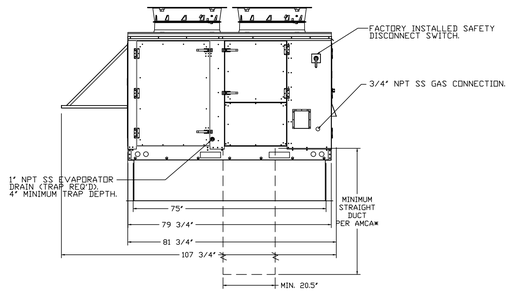

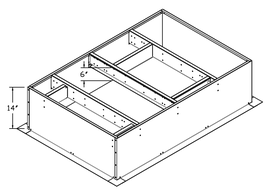

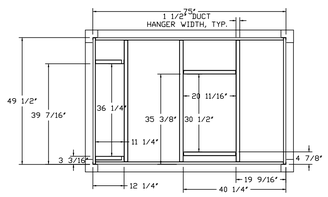

FAN#2 (RTU-1) - HEATER PERFORMANCE CURVES.

3500 CFM, 2.559 SP @ 2047 RPM AND 2.965 BHP AT 4154 FEET AND 10 DEG F.
* PLEASE NOTE THAT THESE CURVES WERE ADJUSTED FOR JOB SPECIFIC TEMPERATURE AND ALTITUDE.

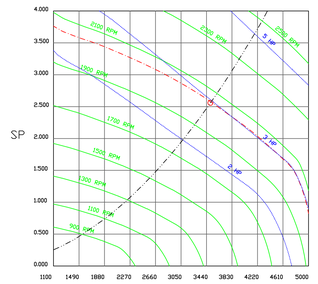

REVISIONS

	DESCRIPTION	DATE:
△		
△		
△		
△		

CAPTIVEAIRE
Northern Nevada Mechanical
P.O. Box 17489, Reno, NV. 89511 PHONE: (775) 238-5843 FAX: (919) 516-8720 EMAIL: reg113@captiveaire.com
www.captiveaire.com

Fernley Community Center R2
FERNLEY, NV, 89408

DATE: 3/16/2023

DWG.#: 5896855

DRAWN BY: Region 113

SCALE: 1/2" = 1'-0"

MASTER DRAWING

SHEET NO. 3

tsk
225 South Arlington Avenue
Reno NV, 89501
phone: 775.857.2949
fax: 775.857.2403
www.tska.com

THESE DRAWINGS AND SPECIFICATIONS ARE THE PROPERTY OF TATE SNYDER KIMSEY ARCHITECTS AND MAY NOT BE REPRODUCED OR USED FOR ANY PURPOSE WITHOUT THE ARCHITECTS WRITTEN CONSENT. AS INSTRUMENTS OF SERVICE, THESE DOCUMENTS ARE NOT FINAL AND READY FOR USE, AND THEREFORE NOT VALID, UNLESS THEY ARE SEALED, SIGNED AND DATED.

Copyright, Ltd 2023

Consultant

AINSWORTH ASSOCIATES
MECHANICAL ENGINEERS
1420 HOLCOMB AVE., SUITE 201
RENO, NV 89502
TEL: 775-329-9100
4557 GREENVIEW DR.
EL DORADO HILLS, CA 95762
TEL: 916-737-6014
www.aa-me.com

JOB 2021-065

PLEASE RECYCLE

Project

CITY OF FERNLEY CRRC

Job No: 21-058.00

Owner

CITY OF FERNLEY

PROGRESS
NOT FOR CONSTRUCTION

50% CONSTRUCTION DOCUMENTS

REVISIONS		
REV	DATE	DESCRIPTION

Sheet Title

CAPTIVEAIRE PLANS

Date: MARCH 21, 2023

Sheet No:

M5.03

FAN #3 CASRTU3-I.250-24MF-12.5T - HEATER (RTU-2)

NOTES:

1. DO NOT OBSTRUCT OUTSIDE AIR INLET, OUTSIDE AIR COIL OR OUTSIDE AIR FAN.
2. ( ) DENOTES CORNER WEIGHT.
3. ROOF OPENING MUST BE 2" SMALLER THAN CURB DIMENSIONS IN BOTH DIRECTIONS.

*NOTE: SUPPLY DUCT MUST BE INSTALLED TO MEET SMACNA STANDARDS. A MINIMUM STRAIGHT DUCT LENGTH MUST BE MAINTAINED DOWNSTREAM OF UNIT DISCHARGE AS OUTLINED IN AMCA PUBLICATION 201. WHEN USING RECTANGULAR DUCTWORK, ELBOWS MUST BE RADIUS THROAT, RADIUS BACK WITH TURNING VANES. FLEXIBLE DUCTWORK AND SQUARE THROAT/SQUARE BACK ELBOWS SHOULD NOT BE USED. ANY TRANSITION AND/OR TURNS IN THE DUCTWORK WILL CAUSE SYSTEM EFFECT. SYSTEM EFFECT WILL DRASTICALLY INCREASE STATIC PRESSURE AND REDUCE AIRFLOW. DO NOT RELY ON UNIT TO SUPPORT DUCT IN ANY WAY. FAILURE TO PROPERLY SIZE DUCTWORK MAY CAUSE SYSTEM EFFECTS AND REDUCE PERFORMANCE OF THE EQUIPMENT.
SUGGESTED STRAIGHT DUCT SIZE IS 21.5" x 39".

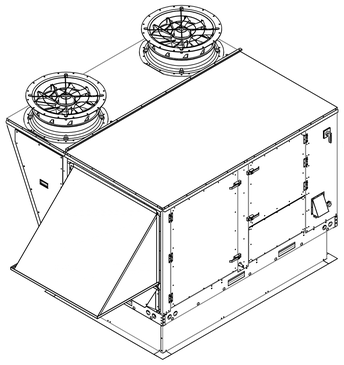

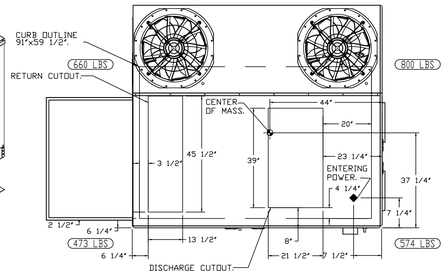

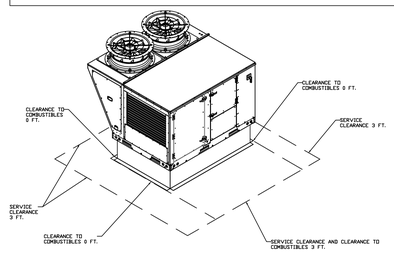

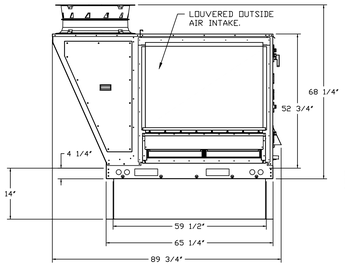

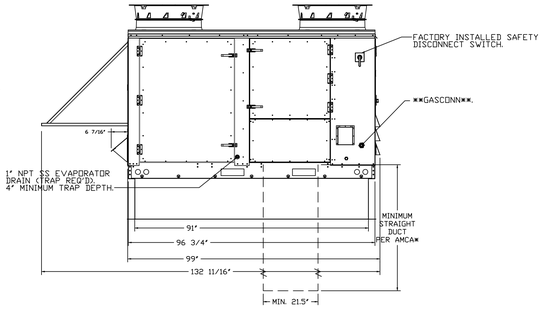

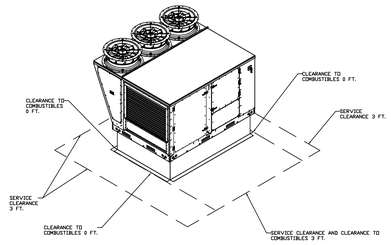

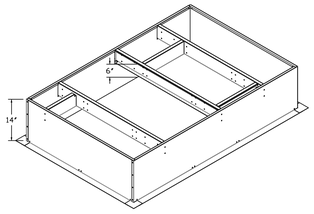

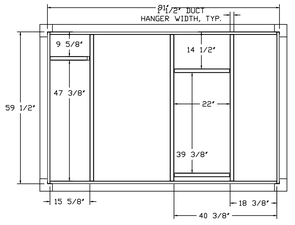

FAN#3 (RTU-2) - HEATER PERFORMANCE CURVES.

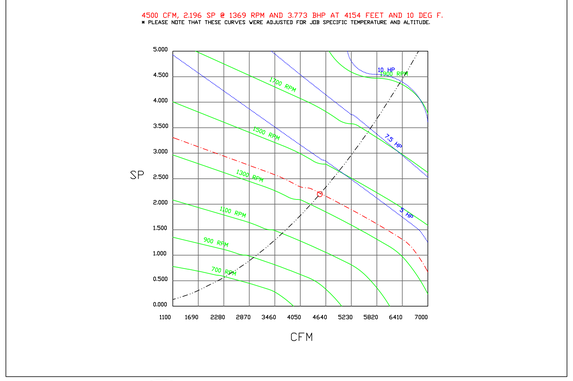

REVISIONS

	DESCRIPTION	DATE:
△		
△		
△		
△		

CAPTIVEAIRE

www.captiveaire.com

Northern Nevada Mechanical

P.O. Box 17488, Reno, NV, 89511 PHONE: (775) 236-5843 FAX: (919) 516-8720 EMAIL: reg113@captiveaire.com

Fernley Community Center R2
FERNLEY, NV, 89408

DATE: 3/16/2023

DWG.#: 5896855

DRAWN BY: Region 113

SCALE: 1/2" = 1'-0"

MASTER DRAWING

SHEET NO. 4

tsk
225 South Arlington Avenue
Reno NV, 89501
phone: 775.857.2949
fax: 775.857.2403
www.tska.com

THESE DRAWINGS AND SPECIFICATIONS ARE THE PROPERTY OF TATE SNYDER KIMSEY ARCHITECTS AND MAY NOT BE REPRODUCED OR USED FOR ANY PURPOSE WITHOUT THE ARCHITECTS WRITTEN CONSENT. AS INSTRUMENTS OF SERVICE, THESE DOCUMENTS ARE NOT FINAL AND READY FOR USE, AND THEREFORE NOT VALID, UNLESS THEY ARE SEALED, SIGNED AND DATED.

Copyright, Ltd 2023

Consultant

AINSWORTH ASSOCIATES
MECHANICAL ENGINEERS
1420 HOLCOMB AVE., SUITE 201
RENO, NV 89502
TEL: 775-329-9100
4557 GREENVIEW DR.
EL DORADO HILLS, CA 95762
TEL: 916-737-6014
www.aa-me.com

JOB 2021-065

PLEASE RECYCLE

Project

CITY OF FERNLEY CRRC

Job No: 21-058.00

Owner

CITY OF FERNLEY

PROGRESS
NOT FOR CONSTRUCTION

50% CONSTRUCTION DOCUMENTS

REVISIONS		
REV	DATE	DESCRIPTION

Sheet Title

CAPTIVEAIRE PLANS

Date: MARCH 21, 2023

Sheet No:

M5.04

NOTE:

1. VERIFY AND COORDINATE PAD THICKNESSES, SIZES AND LOCATION WITH APPROVED MECHANICAL EQUIPMENT SIZES.

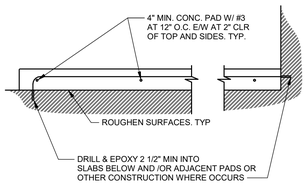

CONCRETE HOUSEKEEPING PAD

SCALE: NONE — 1 / M6.01

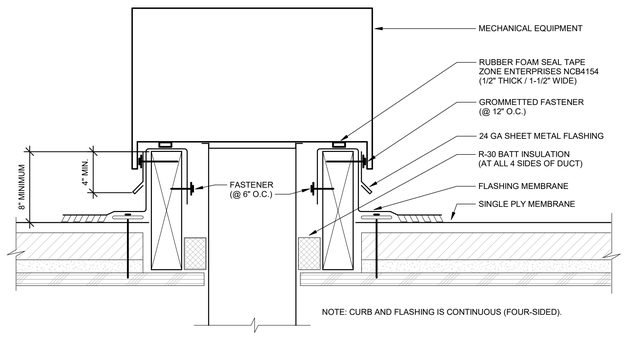

MECHANICAL EQUIPMENT CURB/FLASHING

SCALE: NONE — 2 / M6.01

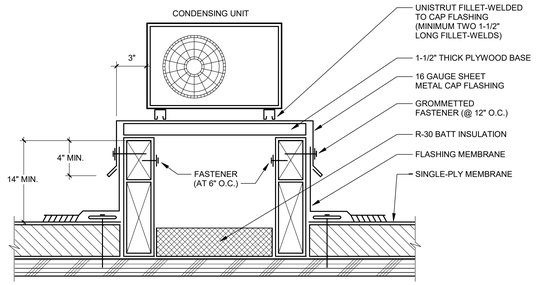

NOTES:

1. ROUTE REFRIGERANT PIPING AND CONDUIT THRU ROOF ADJACENT TO CONDENSING UNIT CURB PER PIPE/CONDUIT FLASHING DETAIL.
2. CURB AND FLASHING IS CONTINUOUS (FOUR-SIDED).
3. MOUNT CURB TO ROOF STRUCTURE - SEE STRUCTURAL.
4. COORDINATE SINGLE-PLY FLASHING WITH ARCHITECTURAL.

CONDENSING UNIT CURB

SCALE: NONE — 3 / M6.01

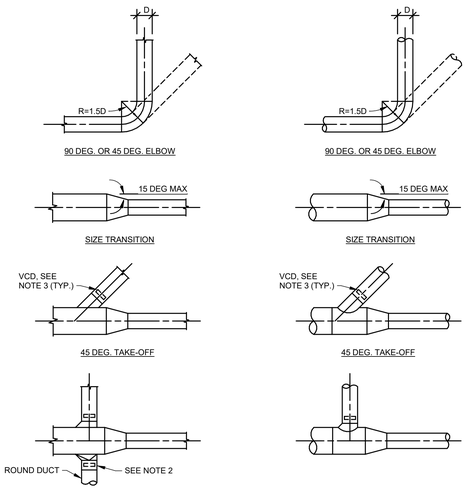

NOTES:
1. DETAILS ARE APPLICABLE TO 2-INCH PRESSURE CLASS DUCT SYSTEMS.
2. "FLEXMASTER" STO/STOD-BO3 FITTING. PROVIDE WITH DAMPER OPTION (BO3) WHEN SERVING INDIVIDUAL INLETS AND OUTLETS.
3. PROVIDE VOLUME CONTROL DAMPER IN BRANCH DUCT WHEN BRANCH DUCT IS SERVING INDIVIDUAL INLETS AND OUTLETS.

DUCT FITTING

SCALE: NONE — 4 / M6.01

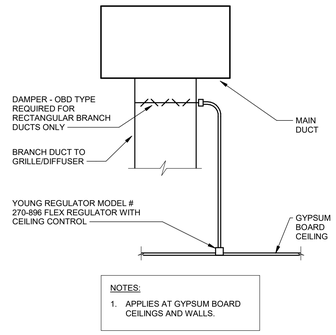

NOTES:

1. APPLIES AT GYPSUM BOARD CEILINGS AND WALLS.

REMOTE DAMPER REGULATOR

SCALE: NONE — 5 / M6.01

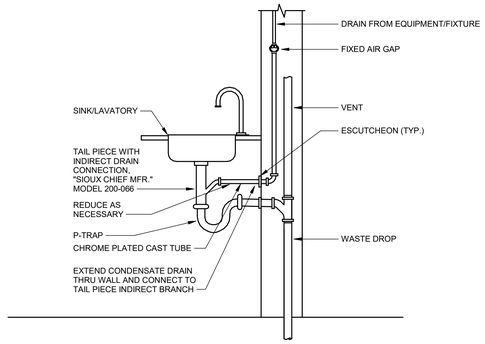

CONDENSATE DRAIN TO TAILPIECE

SCALE: NONE — 6 / M6.01

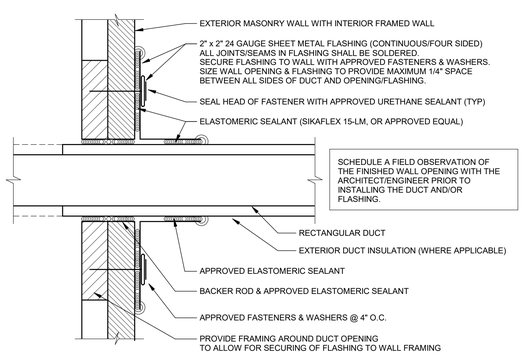

RECTANGULAR DUCT THRU VERTICAL WALL FLASHING

SCALE: NONE — 7 / M6.01

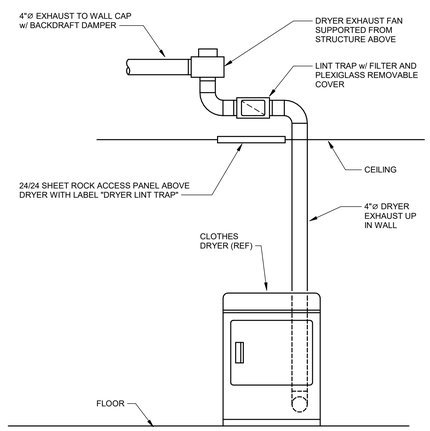

NOTES:

1. SCREWS SHALL NOT BE UTILIZED AT ANY DUCT JOINTS.
2. SECURE DUCT JOINTS WITH HIGH TEMPERATURE FOIL TAPE (3M 3381, OR EQUAL).
3. THE EXHAUST FAN SHALL BE INTERLOCKED TO OPERATE WHENEVER THE CLOTHES DRYER IS ENABLED.

CLOTHES DRYER EXHAUST FAN

SCALE: NONE — 8 / M6.01

tsk

225 South Arlington Avenue
Reno NV, 89501
phone: 775.857.2949
fax: 775.857.2403
www.tska.com

THESE DRAWINGS AND SPECIFICATIONS ARE THE PROPERTY OF TATE SNYDER KIMSEY ARCHITECTS AND MAY NOT BE REPRODUCED OR USED FOR ANY PURPOSE WITHOUT THE ARCHITECTS WRITTEN CONSENT. AS INSTRUMENTS OF SERVICE, THESE DOCUMENTS ARE NOT FINAL AND READY FOR USE, AND THEREFORE NOT VALID, UNLESS THEY ARE SEALED, SIGNED AND DATED.

Copyright, Ltd 2023

Consultant

AINSWORTH ASSOCIATES
MECHANICAL ENGINEERS
1420 HOLCOMB AVE., SUITE 201
RENO, NV 89502
TEL: 775-329-9100
4557 GREENVIEW DR.
EL DORADO HILLS, CA 95762
TEL: 916-737-6014
www.aa-me.com

JOB 2021-065

PLEASE RECYCLE

Project

CITY OF FERNLEY CRRC

Job No: 21-058.00

Owner

CITY OF FERNLEY

PROGRESS
NOT FOR CONSTRUCTION

50% CONSTRUCTION DOCUMENTS

REVISIONS		
REV	DATE	DESCRIPTION

Sheet Title

MECHANICAL DETAILS

Date: MARCH 21, 2023

Sheet No:

M6.01

PLUMBING FIXTURE SCHEDULE

WC-1	WATER CLOSET ADA "AMERICAN STANDARD" AFWALL MODEL 2257.101 WALL MOUNTED STANDARD HEIGHT OR ADA HEIGHT (SEE ARCHITECTURAL SHEETS) VITREOUS CHINA TOILET WITH ELONGATED BOWL. FURNISH WITH "SLOAN" ROYAL 111-1.28 FLUSH VALVE AND "OLSONITE" MODEL #10SSCT TOILET SEAT.
WC-2	WATER CLOSET ADA "AMERICAN STANDARD" BABY DEVORO FLOWISE MODEL 2282.001 FLOOR MOUNTED. VITREOUS CHINA TOILET WITH ELONGATED BOWL. FURNISH WITH "AMERICAN STANDARD" MANUAL #6047.121.002 AND MODEL #5001G.055 TOILET SEAT.
UR-1	URINAL "AMERICAN STANDARD" WASHBROOK MODEL 6590.001 WALL MOUNTED VITREOUS CHINA URINAL WITH ELONGATED RIM. FURNISH WITH "SLOAN" ROYAL 186-0.5 FLUSH VALVE.
L-1	LAVATORY "AMERICAN STANDARD" LUCERNE MODEL 0355.012 WALL HUNG VITREOUS CHINA LAVATORY. FURNISH WITH "CHICAGO" MODEL EVR-A12D-41ABCP FAUCET 4" FIXED CENTERS, SINGLE SUPPLY FOR TEMPERED WATER, 0.35 GPM AND GRID DRAIN. INSULATE HOT AND COLD WATER PIPING AND WASTE PIPING BELOW FIXTURE WITH "TRUE-BRO" LAV GUARD PROTECTIVE MOLDED CLOSED CELL VINYL PIPE COVERS, WITH VANDAL RESISTANT SNAP-CLIP FASTENERS. FURNISH WITH NIBCO WEBSTONE MODEL H-77201W THERMOSTATIC MIXING VALVE.
L-2	LAVATORY "BRADLEY" MODEL ELX-2 2-STATION EXPRESS LAVATORY SYSTEM WITH 4" CENTERSET DRILLING, NSD NO SOAP DISPENSER/NO DRILLING, ALP-WHT ALPINE WHITE COLOR, NBS NO BACKSPLASH, COAL ACCESS PANEL AND IW-CHROME CHROME-PLATED INDIVIDUAL WASTE ASSEMBLY. TMA THERMOSTATIC MIXING ASSEMBLY. FURNISH WITH "CHICAGO" MODEL EVR-A12D-41ABCP FAUCET 4" FIXED CENTERS, SINGLE SUPPLY FOR TEMPERED WATER, 0.35 GPM AND GRID DRAIN.
S-1	SINK "ELKAY" MODEL #LR1919PD SINGLE COMPARTMENT 18 GAUGE 16"X13 ½"X7 ½" DEEP BOWL SIZE STAINLESS STEEL SINK. FURNISH WITH CHICAGO MODEL #210-A317VPCABCP FAUCET WITH WRIST BLADE HANDLES, LKPD1 DRAIN STRAINER, 17 GAUGE CHROME PLATED P-TRAP, BRASSCRAFT STOPS AND RISERS.
FS-1	FLOOR SINK ZURN MODEL Z1902 CAST IRON DRAIN, 12"X12"X10" DEEP WITH ENAMELED CAST IRON WITH HALF GRATE. CAST TRAP WITH TRAP PRIMER.
HB-1	HOSE BIBB WOODFORD MODEL P-24 HOSE BIBB WITH VACUUM BREAKER AND 3/4" THREADED HOSE CONNECTION. PROVIDE WITH LOOSE TEE KEY.
HB-2	HOSE BIBB WOODFORD MODEL B65, FREEZELESS WALL HYDRANT WITH ANTI-SIPHON VACUUM BREAKER, 3/4" THREADED HOSE CONNECTION. PROVIDE WITH LOOSE TEE KEY.
RD/ORD	OVERFLOW ROOF DRAIN ZURN MODEL Z-100 WITH UNDERDECK CLAMP, SUMP RECEIVER AND EXTENSION. SIZE AS INDICATED ON DRAWINGS. FURNISH WITH 2" EXTERNAL DAM FOR OVERFLOW APPLICATION
DS	DOWNSPOUT NOZZLE ZURN MODEL Z199 NICKEL BRONZE BODY AND FLANGE.
WHA-1	WATER HAMMER ARRESTOR "SIOUX CHIEF" HYDRA-RESTER PISTON STYLE WATER HAMMER ARRESTOR, 650 SERIES, TYPE L COPPER TUBE, POLY PISTON WITH TWO EPSM O-RINGS, COPPER MIP THREAD. PDI SIZING
SGV-1	SEISMIC GAS VALVE "PACIFIC SEISMIC PRODUCTS" MODEL 316 CALIFORNIA SEISMIC VALVE WITH MONITORING SWITCH. ASCE 25-97 LISTED.
BFP-1	BACKFLOW PREVENTER WILKENS MODEL 375 LEAD-FREE REDUCED PRESSURE BACKFLOW PREVENTER, COMPLETE WITH CAST SILICON ALLOY BODY AND BALL VALVE TEST COCKS.
IMB-1	ICE MAKER BOX "GUY GRAY MANUFACTURING CO." MODEL MIB1HAAB METAL POWDER COATED ICE MAKER OUTLET BOX WITH BRASS QUARTER TURN HAMMER ARRESTER VALVE AND 1/2" SWEAT CONNECTION.
CWB-1	CLOTHES WASHER BOX "GUY GRAY MANUFACTURING CO." W2700HA BRASS QUARTER TURN VALVES WITH HAMMER ARRESTORS 1/2" SWEAT CONNECTIONS.
TP-1	TRAP PRIMER PRECISION PLUMBING PRODUCTS MODEL PR-500
SHR-1	SHOWER "MOEN" MODEL #8375 SINGLE HANDLE PRESSURE BALANCING SHOWER VALVE WITH INTEGRAL STOPS, VANDAL RESISTANT SHOWER HEAD
SHR-2	SHOWER "MOEN" MODEL #8342 ADA COMPLIANT SINGLE HANDLE PRESSURE BALANCING SHOWER VALVE WITH INTEGRAL STOPS, VANDAL RESISTANT SHOWER HEAD AND HANDHELD SHOWER HEAD WITH SLIDE BAR.
MS-1	SERVICE SINK "CECO" MODEL 871 CORNER SERVICE SINK 28"X28" ENAMELED CAST IRON WITH CHROME FLAT STRAINER AND RIM GUARDS. FURNISH WITH CHICAGO MODEL 897-CP FAUCET WITH VACUUM BREAKER AND WALL SUPPORT.
EWC-1	ELECTRIC WATER COOLER "ELKAY" MODEL LZS8WSSK , WALL MOUNTED WATER COOLER WITH BOTTLE FILLING STATION, STAINLESS STEEL, BI-LEVEL, PUSH-BUTTON OPERATED, VANDAL RESISTANT, BARRIER-FREE, 8 GPH, ELECTRIC WATER COOLER WITH IN WALL MOUNTING FRAME. ELECTRICAL SERVICE SHALL BE 115V, 60 HZ, 370 WATTS, 5 FLA. PROVIDE WITH CANE DETECTION SHIELD.
EWC-2	ELECTRIC WATER COOLER "ELKAY" MODEL LZSTL8WSLK , WALL MOUNTED WATER COOLER WITH BOTTLE FILLING STATION, STAINLESS STEEL, BI-LEVEL, PUSH-BUTTON OPERATED, VANDAL RESISTANT, BARRIER-FREE, 8 GPH, ELECTRIC WATER COOLER WITH IN WALL MOUNTING FRAME. ELECTRICAL SERVICE SHALL BE 115V, 60 HZ, 370 WATTS, 5 FLA. PROVIDE WITH CANE DETECTION SHIELD.
FD-1	FLOOR DRAIN ZURN MODEL Z415B, CAST IRON DRAIN BODY WITH FLASHING COLLAR AND ADJUSTABLE STRAINER HEAD. STRAINER FINISH PER SPECIFICATION, CAST TRAP WITH TRAP PRIMER CONNECTION
YH-1	YARD HYDRANT ZURN MODEL Z1396, NON-FREEZE YARD HYDRANT COMPLETE WITH DURA-COATED CAST IRON HEAD AND LIFT HANDLE WITH LOCKING CAPABILITY, BRONZE INTERIOR PARTS, GALVANIZED STEEL CASING, BRONZE VALVE HOUSING, AND 3/4" FEMALE IP INLET CONNECTION. HYDRANT IS EQUIPPED WITH A TAPPED 1/8" DRAIN PORT IN THE VALVE HOUSING, AND 3/4" MALE HOSE CONNECTION.
TD-1	TRENCH DRAIN ZURN MODEL Z886-HD TRENCH DRAIN, 6.75" WIDE x LENTH AS REQUIRED. PROVIDE CLASS A HPS HEEL-PROOF SLOTTED STAINLESS STEEL GRATE, LIGHT DUTY. GRATE SHALL BE CAPABLE OF LOCKING TO GRATE FRAME WITH VANDAL PROOF LOCKDOWN OPTION.
ETP-1	ELECTRIC TRAP PRIMER PPP, INC MPB-500 "MINI-PRIME" ELECTRONIC TRAP PRIMING ASSEMBLY WITH 12"x12" METAL CABINET. 1" AIR GAP FITTING, 24-HOUR TIMER TO PROVIDE MINIMUM OF 2 OUNCES OF WATER AT FACTORY PRESET SETTING OF 10 SECONDS, MANUAL OVERRIDE SWITCH AND TEST BUTTON, SOLENOID VALVE, 1/2"CW INLET CONNECTION. 120 VOLT REQUIRED. FURNISH WITH HINGED, POWDER COATED ACCESS DOOR

EQUIPMENT SCHEDULE

WH 1 / WH 2	WATER HEATER LOCHINVAR MODEL SWR285N HIGH EFFICIENCY WATER HEATER, 110 GALLON STORAGE, 285 MBH INPUT, 328 GPH RECOVERY @ 100°F RISE. FURNISH WITH PRESSURE AND TEMPERATURE RELIEF VALVE, CONCENTRIC VENT KIT, AND CONDENSATE NEUTRALIZATION KIT. 115 V, OP. WGT. = 1720 LBS.
WH 3	WATER HEATER LOCHINVAR MODEL SWR400N HIGH EFFICIENCY WATER HEATER, 110 GALLON STORAGE, 399 MBH INPUT, 459 GPH RECOVERY @ 100°F RISE. FURNISH WITH PRESSURE AND TEMPERATURE RELIEF VALVE, CONCENTRIC VENT KIT, AND CONDENSATE NEUTRALIZATION KIT. 115 V, OP. WGT. = 1720 LBS.
CP 1	CIRCULATION PUMP TACO MODEL 009-SF5, 3.5 GPM AT 13' TDH, 1/8 HP. 115 VOLT. BRONZE BODY.
CP 2	CIRCULATION PUMP TACO MODEL 009-SF5, 2 GPM AT 10' TDH, 1/8 HP. 115 VOLT. BRONZE BODY.
ET 1 / ET 2	EXPANSION TANK WATTS MODEL #DETA-60 DOMESTIC WATER EXPANSION TANK.
TMV 1	THERMOSTATIC MIXING VALVE LEONARD PNV-100-LF DIGITAL MIXING VALVE SET TO 110°F, 17 GPM @ 5 PSI DROP. MINIMUM 0.25 GPM. 115 VOLT
TMV 2	THERMOSTATIC MIXING VALVE LEONARD PNV-100-LF DIGITAL MIXING VALVE SET TO 140°F, 40 GPM @ 5 PSI DROP. MINIMUM 0.25 GPM. 115 VOLT

MAXIMUM FIXTURE UNIT LOADING FOR WATER PIPE

NOMINAL PIPE SIZE (INCHES)	3/4"	1"	1 1/4"	1 1/2"	2"	2 1/2"	3"	4"	6"
FIXTURE UNITS (WITHOUT FLUSH VALVES)	6	10	21	34	127	245	431	875	3150
FIXTURE UNITS (WITH ONE OR MORE FLUSH VALVES)	-	5	10	20	48	124	295	850	3150

NOTES
1. USE ABOVE DATA ONLY WHEN PIPE SIZES ARE NOT OTHERWISE SIZED ON THE DRAWINGS
2. FIXTURE UNITS ARE AS LISTED FOR PUBLIC USE IN UNIFORM PLUMBING CODE.

PLUMBING FIXTURE CONNECTION SCHEDULE

FIXTURE	SYMBOL	WASTE		VENT	COLD WATER		HOT WATER	
		BRANCH	OUTLET		BRANCH	OUTLET	BRANCH	OUTLET
WATER CLOSET (FV.)	WC	4"	4"	2"	1 1/4"	1"	-	-
URINAL	UR	2"	2"	1 1/2"	1"	3/4"	-	-
LAVATORY	L	2"	1 1/2"	1 1/2"	3/4"	1/2"	3/4"	1/2"
ELECTRIC WATER COOLER	EWC	2"	1 1/2"	1 1/2"	1/2"	1/2"	1/2"	1/2"
SERVICE SINK	SS	3"	3"	2"	1/2"	1/2"	1/2"	1/2"
FLOOR SINK	FS	2"	2"	1 1/2"	-	-	-	-
SINK	S	2"	1 1/2"	1 1/2"	1/2"	1/2"	1/2"	1/2"
FLOOR DRAIN	FD	2"	2"	1 1/2"	-	-	-	-
HOSE BIBB	HB	-	-	-	1/2"	3/4"	-	-
WASHER BOX	WB	2"	2"	1 1/2"	1/2"	1/2"	1/2"	1/2"
SHOWER	SHR	2"	1 1/2"	1 1/2"	1/2"	1/2"	1/2"	1/2"

NOTES 1. WATER BRANCH LINES WHERE LESS THAN 10'-0" LONG MAY BE SAME SIZE AS OUTLETS SCHEDULED ABOVE.

GENERAL NOTES

1. ALL WORK AND MATERIALS SHALL CONFORM TO THE LATEST ADOPTED EDITION OF THE IBC, UMC, UPC, NEC, NFPA, NEVADA STATE FIRE MARSHAL REGULATIONS, LOCAL AND STATE ORDINANCES, AND INDUSTRY STANDARDS.
2. SUBMIT FOR REVIEW AND APPROVAL ELECTRONIC COPIES OF SUBMITTALS FOR ALL EQUIPMENT, DUCTWORK, AIR DISTRIBUTION, PLUMBING FIXTURES, INSULATION, VALVES, AND PIPING MATERIALS.
3. AS-BUILT DRAWINGS SHALL BE SUBMITTED FOR REVIEW AND APPROVAL UPON COMPLETION OF THE WORK, AND PRIOR TO FINAL PAYMENT. AS-BUILT DRAWINGS SHALL BE MAINTAINED ON SITE AS THE WORK PROGRESSES AND SHALL BE AVAILABLE FOR REVIEW BY THE OWNER AND/OR ARCHITECT/ENGINEER AT ALL TIMES.
4. ALL EQUIPMENT AND MATERIALS SHALL BE INSTALLED IN STRICT ACCORDANCE WITH THE MANUFACTURER'S WRITTEN INSTALLATION INSTRUCTIONS.
5. THE WORK AND MATERIALS SHALL BE GUARANTEED FOR A PERIOD OF ONE YEAR FROM THE DATE OF ACCEPTANCE BY THE OWNER.
6. COORDINATE THE ACTUAL LOCATION OF ROOFTOP UNITS, VENTS THROUGH THE ROOF, ETC. WITH THE ROOF PLANS.
7. COORDINATE THE EXACT LOCATION OF EQUIPMENT AND OF PENETRATIONS THROUGH THE ROOF, FLOORS, AND WALLS WITH STRUCTURAL DRAWINGS PRIOR TO ANY ROUGH-IN.
8. SEISMIC BRACING FOR MECHANICAL SYSTEMS (EQUIPMENT, DUCTWORK, PIPING, AND CONDUIT) SHALL COMPLY WITH ALL APPLICABLE REQUIREMENTS OF THE 2018 INTERNATIONAL BUILDING CODE (IBC) INCLUDING ALL APPLICABLE PROVISIONS OF THE AMERICAN SOCIETY OF CIVIL ENGINEERS (ASCE) MINIMUM DESIGN LOADS FOR BUILDINGS (ASCE STANDARD 7-16 SECTION 13.1.3).
9. PIPING SHALL BE INSTALLED SUCH THAT IT DOES NOT OBSTRUCT ACCESS OR REMOVAL OF MECHANICAL EQUIPMENT.
10. DASHED OUTLINES DENOTE THE REQUIRED SERVICE CLEARANCE SPACE (SEE DUCTWORK PLANS). NO PIPING, DUCTWORK, CONDUIT, AND/OR CEILING HANGERS SHALL BE INSTALLED IN THE DESIGNATED SERVICE/ACCESS CLEARANCE AREA.
11. SEE ARCHITECTURAL AND/OR STRUCTURAL DRAWINGS FOR HOLE CORING REQUIREMENTS.
12. COORDINATE ROUTING OF DUCTWORK WITH PIPING, PLUMBING, FIRE SPRINKLER, AND ELECTRICAL TRADES PRIOR TO BEGINNING WORK.
13. ALL EQUIPMENT, PIPING,ETC. SHALL BE SUPPORTED AS REQUIRED TO PROVIDE A VIBRATION-FREE INSTALLATION.
14. ALL ROOF PENETRATIONS SHALL BE FLASHED AND COUNTER-FLASHED WATERTIGHT.
15. TESTING AND BALANCING SHALL BE CONDUCTED BY AN AABC CERTIFIED TEST AND BALANCE CONTRACTOR. TEST AND BALANCE ALL WATER SYSTEMS TO ACHIEVE THE LISTED VOLUMES. THE FINALIZED REPORT SHALL BE SUBMITTED TO THE ARCHITECT/ENGINEER FOR REVIEW AND APPROVAL UPON COMPLETION OF THE TESTING AND BALANCING AND BEFORE SCHEDULING THE FINAL OBSERVATION.
16. ALL PIPING WORK SHALL BE COORDINATED WITH ALL TRADES AND EXISTING CONDITIONS PRIOR TO COMMENCING WORK. OFFSETS IN PIPING AROUND OBSTRUCTIONS SHALL BE PROVIDED AS REQUIRED.
17. DO NOT ROUTE ANY PIPING DIRECTLY ABOVE ELECTRICAL EQUIPMENT, SWITCHBOARDS, DISTRIBUTION PANELS, MCC'S, ETC. AS PROHIBITED BY THE 2017 NEC.
18. DO NOT FABRICATE PIPING FROM THE DRAWINGS. SPACE ALLOCATION SHALL BE DETERMINED IN THE FIELD AND COORDINATED WITH OTHER TRADES PRIOR TO FABRICATION.
19. VERIFY THE EXACT LOCATION, INVERT ELEVATION, SIZE, AND POINT OF CONNECTION OF ALL NEW AND EXISTING UTILITIES PRIOR TO ROUGH-IN OF ANY PLUMBING PIPING.
20. REFER TO THE ARCHITECTURAL DRAWINGS FOR EXACT LOCATIONS AND MOUNTING HEIGHTS OF PLUMBING FIXTURES AS REQUIRED TO COMPLY WITH ADA REQUIREMENTS.
21. INSULATE DOMESTIC HOT AND COLD WATER PIPING AND WASTE PIPING BELOW ADA PLUMBING FIXTURES WITH 'TRUEBRO' LAV GUARD 2 PROTECTIVE MOLDED CLOSED-CELL VINYL PIPE COVERS WITH VANDAL-RESISTANT SNAP-CLIP FASTENERS, AND WITH AN ASTM E84-07 FLAME/SMOKE TEST RATING OF 25/50 OR LESS.
22. INSTALL A RIGID CAP ON ALL ABANDONED WATER, WASTE, AND VENT PIPING.
23. PROVIDE ALL PLUMBING FIXTURES AND EQUIPMENT WITH ACCESSIBLE STOPS.
24. SLOPE ALL SEWER, WASTE, AND RAINWATER PIPING AT A MINIMUM OF 1/4" PER FOOT.
25. SLOPE ALL CONDENSATE DRAIN PIPING AT 1/8" PER FOOT.
26. PROVIDE A 1/8" X 6" STEEL BACKING PLATE BOLTED TO A MINIMUM OF 4 STUDS FOR ALL WALL-HUNG FIXTURES. PROVIDE CONCEALED ARMS FOR LAVATORIES BOLTING TO A BACKING PLATE.
27. ADA WATER CLOSETS SHALL HAVE THE WATER ROUGH-IN LOCATED TO RESULT IN THE FLUSH HANDLE FACING THE WIDE SIDE OF THE STALL.
28. IN ADDITION TO WHERE SHOWN ON THE DRAWINGS, PROVIDE CLEANOUTS FOR ALL SINKS, URINALS, & LAVATORIES.
29. PROVIDE CLEANOUT AND ACCESS PANEL ON EVERY ROOF DRAIN LEADER BEFORE TRANSITIONING BELOW GRADE.
30. INSTALL FLOOR SINKS TO BE ACCESSIBLE FOR CLEANING AND INSPECTION.
31. THE CONTRACTOR SHALL BE RESPONSIBLE FOR CONNECTION TO ALL NEW KITCHEN EQUIPMENT. SEE FOOD SERVICE DRAWINGS FOR ADDITIONAL CONTRACTOR RESPONSIBILITIES. PROVIDE ALL REQUIRED FAUCETS, STOPS, INDIRECT DRAINS, AND INSTALL ALL TRIM FURNISHED WITH ALL EQUIPMENT. INSTALLATION SHALL BE COMPLETE AND SHALL BE OPERABLE TO THE SATISFACTION OF THE OWNER'S REPRESENTATIVE.
32. PRIOR TO ROUGH-IN OF ANY PLUMBING FOR KITCHEN EQUIPMENT FURNISHED BY OTHERS, REVIEW EXACT LOCATIONS OF ROUGH-INS WITH DIMENSIONED ROUGH-IN FOOD SERVICE DRAWINGS AND CUT SHEETS.
33. SYMBOL (XX) DENOTES KITCHEN EQUIPMENT. SEE FOOD SERVICE DRAWINGS FOR EXACT ROUGH-IN AND LOCATION.
34. INTERLOCK FIRE SUPPRESSION SYSTEM WITH THE GAS SOLENOID VALVE AND THE CONTROL PANEL. ACTIVATION OF FIRE SUPPRESSION SYSTEM SHALL SHUT OFF GAS TO ALL GAS FIRED EQUIPMENT BELOW THE HOODS AND SHUT DOWN THE MAKE-UP AIR UNITS AND EXHAUST FANS.

PLUMBING FOOD SERVICE NOTES

1. THE CONTRACTOR SHALL BE RESPONSIBLE FOR CONNECTION TO ALL NEW BAR AND KITCHEN EQUIPMENT. SEE FOOD SERVICE DRAWINGS FOR ADDITIONAL CONTRACTOR RESPONSIBILITIES. PROVIDE ALL REQUIRED FAUCETS, STOPS, INDIRECT DRAINS, AND INSTALL ALL TRIM FURNISHED WITH ALL EQUIPMENT. INSTALLATION SHALL BE COMPLETE AND SHALL BE OPERABLE TO THE SATISFACTION OF THE OWNER'S REPRESENTATIVE.
2. PRIOR TO ROUGH-IN OF ANY PLUMBING FOR BAR AND KITCHEN EQUIPMENT FURNISHED BY OTHERS, REVIEW EXACT LOCATIONS OF ROUGH-INS WITH DIMENSIONED ROUGH-IN FOOD SERVICE DRAWINGS AND CUT SHEETS.
3. INTERLOCK FIRE SUPPRESSION SYSTEM WITH THE GAS SOLENOID VALVE AND THE CONTROL PANEL. ACTIVATION OF FIRE SUPPRESSION SYSTEM SHALL SHUT OFF GAS TO ALL GAS FIRED EQUIPMENT BELOW THE HOODS AND SHUT DOWN THE MAKE-UP AIR UNITS AND EXHAUST FANS.
4. ALL HORIZONTAL PIPING LINES AS EXTENDED AND CONNECTED TO EQUIPMENT SHALL BE RUN AT THE HIGHEST POSSIBLE ELEVATION AND NOT LESS THAN 6" ABOVE FINISHED FLOOR TO PROVIDE CLEARANCE FOR CLEANING. INDIRECT WASTE LINES WITHIN EQUIPMENT SHALL BE ROUTED TO CONFORM WITHIN INTERIOR SHELVES, SPACES, OR STRUCTURES.
5. ALL EXPOSED PIPING FOR KETTLES AND ANY EXPOSED PIPING ABOVE COUNTER HEIGHT SHALL BE CHROME PLATED, STAINLESS, OR FITTED WIHT CHROME PLATED SLEEVES. ALL OTHER EXPOSED/SEMI-EXPOSED PING SHALL BE PAINTED SILVER WITH "CHROMATONE" OR EQUAL.

PLUMBING LEGEND

	SOIL OR WASTE LINE BELOW GRADE
	SOIL OR WASTE LINE ABOVE GRADE
IW	INDIRECT WASTE LINE
GW	GREASE WASTE LINE
	VENT LINE
RWL	RAINWATER LEADER LINE
ORWL	OVERFLOW RAINWATER LEADER LINE
D	DRAIN LINE
	COLD WATER LINE
	HOT WATER LINE
	HOT WATER RETURN LINE
G	NATURAL GAS LINE
F	FIRE PIPE
GV	GATE VALVE
BLV	BALL VALVE
BV	BALANCE VALVE
CKV	CHECK VALVE
LH GC	LEVER HANDLE GAS COCK
	THERMOMETER
	PIPE POD/POC
	UNION
T & P	TEMPERATURE AND PRESSURE RELIEF LINE
	EXISTING ITEM TO BE REMOVED
ABC	ABOVE CEILING
UF	UNDER FLOOR
UC	UNDER COUNTER
COTF	CLEANOUT TO FLOOR
COTG	CLEANOUT TO GRADE
CO, WCO	CLEANOUT, WALL CLEANOUT
CW (D)(R)	COLD WATER (DROP) (RISER)
HW (D)(R)	HOT WATER (DROP) (RISER)
W, WD	WASTE, WASTE DROP
FA, TB	FROM ABOVE, TO BELOW
FB, TA	FROM BELOW, TO ABOVE
IE	INVERT ELEVATION
(E), (N)	EXISTING, NEW
V, VR, VTR	VENT, VENT RISER, VENT THRU ROOF
RD	ROOF DRAIN
ORD	OVERFLOW ROOF DRAIN
RWL	RAINWATER LEADER
ORWL	OVERFLOW RAINWATER LEADER
Ø	DIAMETER
TYP	TYPICAL
FD	FLOOR DRAIN
DEM	DEMAND
FU	FIXTURE UNITS
GPM	GALLONS PER MINUTE
R.I.O.	ROUGH IN ONLY
UNO	UNLESS NOTED OTHERWISE
NC	NORMALLY CLOSED
O.C.	ON CENTER
AFF	ABOVE FINISH FLOOR
AFG	ABOVE FINISHED GRADE
SS	STAINLESS STEEL
ROOMNAME --	ROOM NAME AND NUMBER

DRAWING SHEET INDEX

P0.00	PLUMBING SCHEDULES, LEGEND, NOTES, & SHEET INDEX
P1.01	PLUMBING OVERALL FLOOR PLAN
P1.11	PLUMBING PARTIAL FLOOR PLAN - BASE BID
P1.11A	PLUMBING PARTIAL FLOOR PLAN - ALT. A
P1.11B	PLUMBING PARTIAL FLOOR PLAN - ALT. B
P2.11	PLUMBING ENLARGED FLOOR PLANS - BASE BID
P2.11A	PLUMBING ENLARGED FLOOR PLANS - ALT. A
P2.11B	PLUMBING ENLARGED FLOOR PLANS - ALT. B
P2.12	PLUMBING ENLARGED KITCHEN FLOOR PLANS - BASE BID
P4.01	PLUMBING PARTIAL ROOF PLAN - BASE BID
P4.01A	PLUMBING PARTIAL ROOF PLAN - ALT. A
P4.01B	PLUMBING PARTIAL ROOF PLAN - ALT. B
P6.01	PLUMBING DETAILS
PS1.01	PLUMBING SITE PLAN

tsk
225 South Arlington Avenue
Reno NV, 89501
phone: 775.857.2949
fax: 775.857.2403
www.tska.com

THESE DRAWINGS AND SPECIFICATIONS ARE THE PROPERTY OF TATE SNYDER KIMSEY ARCHITECTS AND MAY NOT BE REPRODUCED OR USED FOR ANY PURPOSE WITHOUT THE ARCHITECTS WRITTEN CONSENT. AS INSTRUMENTS OF SERVICE, THESE DOCUMENTS ARE NOT FINAL AND READY FOR USE, AND THEREFORE NOT VALID, UNLESS THEY ARE SEALED, SIGNED AND DATED.
Copyright, Ltd 2023

Consultant

AINSWORTH ASSOCIATES
MECHANICAL ENGINEERS
1420 HOLCOMB AVE., SUITE 201
RENO, NV. 89502
TEL: 775-329-9100
4557 GREENVIEW DR.
EL DORADO HILLS, CA 95762
TEL: 916-737-6014
www.aa-me.com

JOB 2021-065

PLEASE RECYCLE

Project

CITY OF FERNLEY CRRC

Job No: 21-058.00

Owner

CITY OF FERNLEY

PROGRESS NOT FOR CONSTRUCTION

50% CONSTRUCTION DOCUMENTS

REVISIONS		
REV	DATE	DESCRIPTION

Sheet Title

PLUMBING SCHEDULES, LEGEND, NOTES, & SHEET INDEX

Date: MARCH 21, 2023

Sheet No:

P0.00

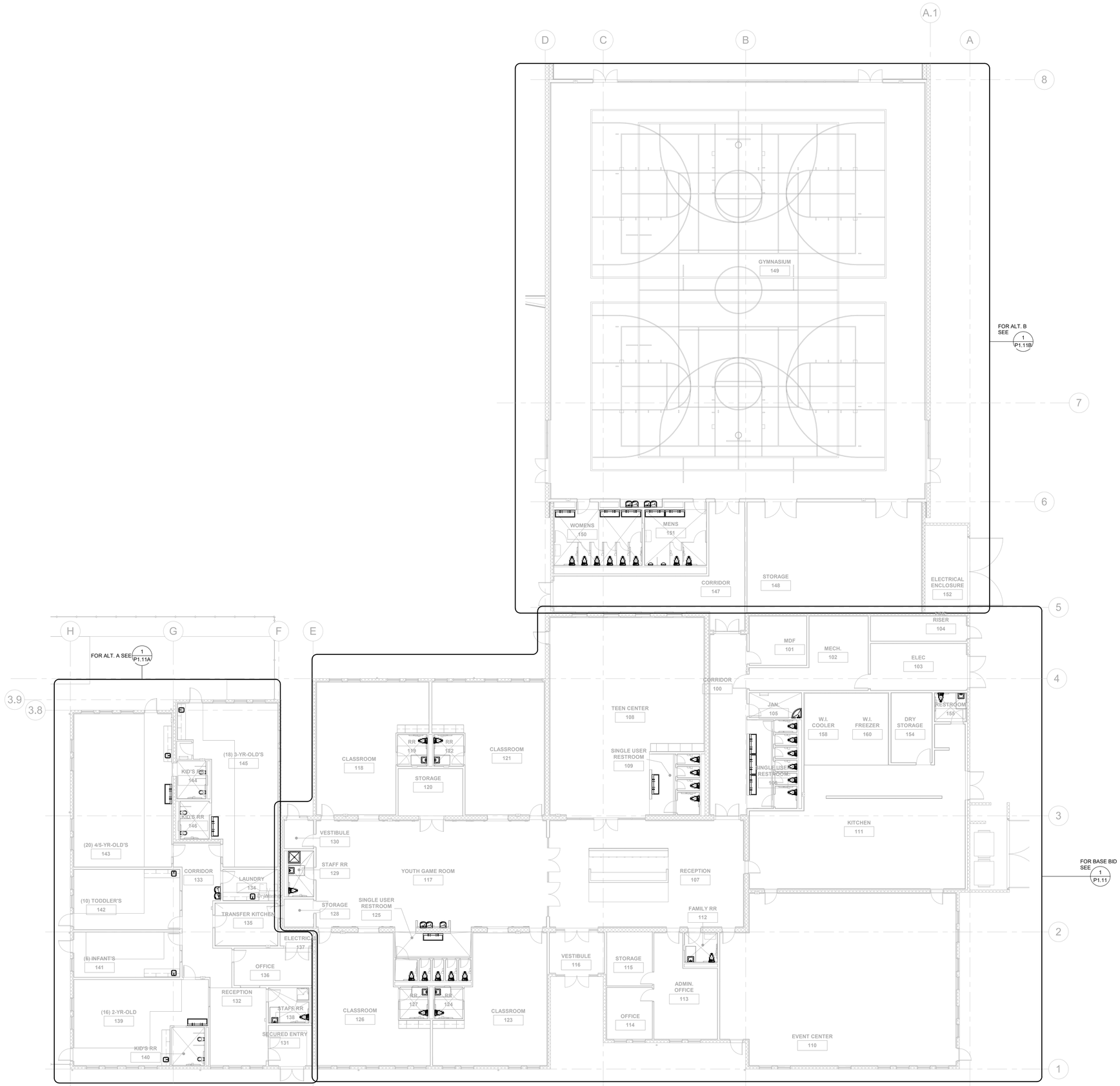

PLUMBING OVERALL FLOOR PLAN - GYMNASIUM 1 P1.01

SCALE: 1" = 10'-0"

N

tsk

225 South Arlington Avenue
Reno NV, 89501
phone: 775.857.2949
fax: 775.857.2403
www.tska.com

THESE DRAWINGS AND SPECIFICATIONS ARE THE PROPERTY OF TATE SNYDER KIMSEY ARCHITECTS AND MAY NOT BE REPRODUCED OR USED FOR ANY PURPOSE WITHOUT THE ARCHITECTS WRITTEN CONSENT. AS INSTRUMENTS OF SERVICE, THESE DOCUMENTS ARE NOT FINAL AND READY FOR USE, AND THEREFORE NOT VALID, UNLESS THEY ARE SEALED, SIGNED AND DATED.

Copyright, Ltd 2023

Consultant

AINSWORTH ASSOCIATES
MECHANICAL ENGINEERS
1420 HOLCOMB AVE., SUITE 201
RENO, NV 89502
TEL: 775-329-9100
4557 GREENVIEW DR.
EL DORADO HILLS, CA 95762
TEL: 916-737-6014
www.aa-me.com

JOB 2021-065

PLEASE RECYCLE

Project

CITY OF FERNLEY CRRC

Job No: 21-058.00

Owner

CITY OF FERNLEY

PROGRESS
NOT FOR CONSTRUCTION

50% CONSTRUCTION DOCUMENTS

REVISIONS		
REV	DATE	DESCRIPTION

Sheet Title

PLUMBING OVERALL FLOOR PLAN

Date: MARCH 21, 2023

Sheet No:

P1.01

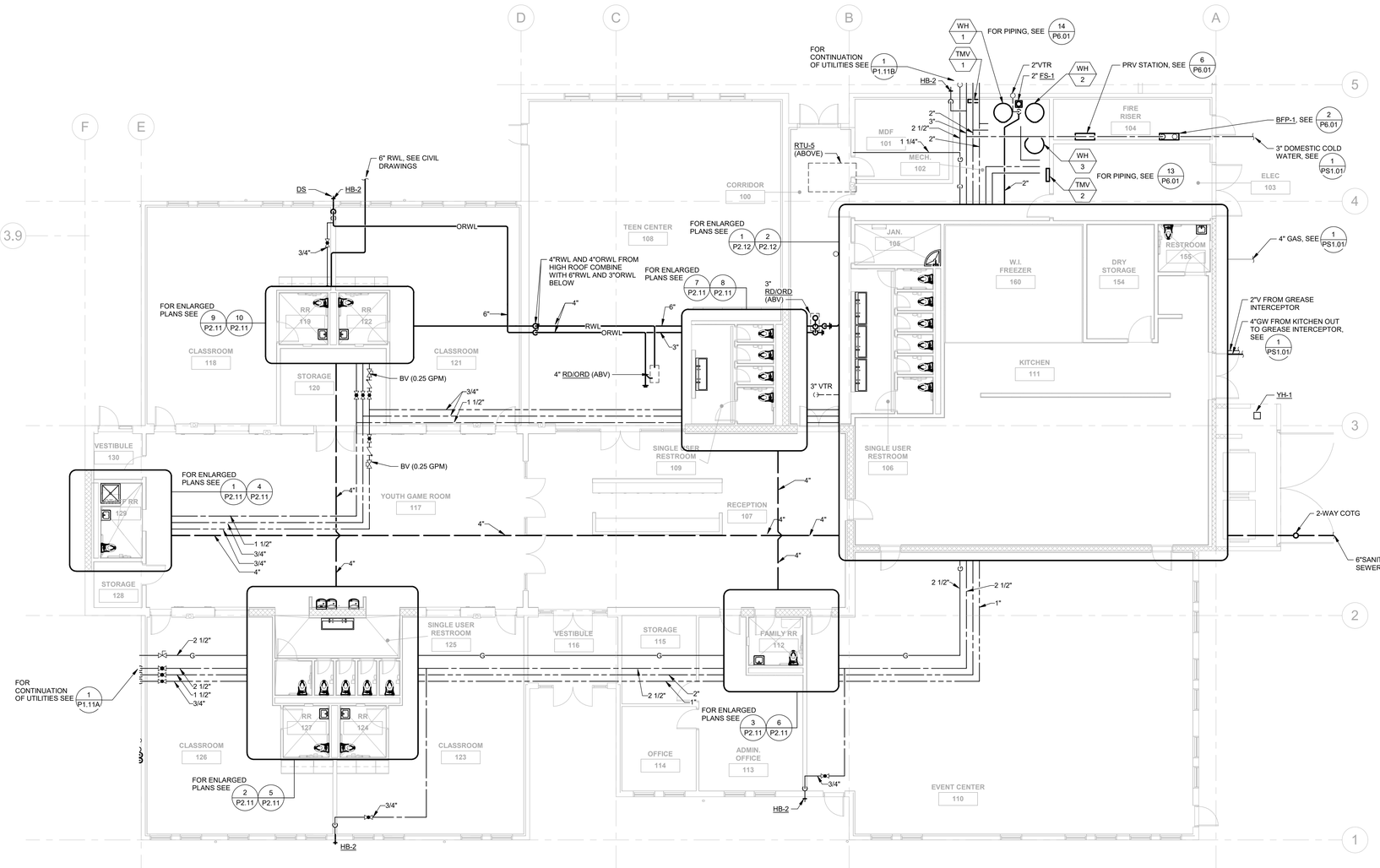

PLUMBING PARTIAL FLOOR PLAN - BASE BID 1 P1.11

SCALE: 1/8" = 1'-0"

N

tsk
225 South Arlington Avenue
Reno NV, 89501
phone: 775.857.2949
fax: 775.857.2403
www.tska.com

THESE DRAWINGS AND SPECIFICATIONS ARE THE PROPERTY OF TATE SNYDER KIMSEY ARCHITECTS AND MAY NOT BE REPRODUCED OR USED FOR ANY PURPOSE WITHOUT THE ARCHITECTS WRITTEN CONSENT. AS INSTRUMENTS OF SERVICE, THESE DOCUMENTS ARE NOT FINAL AND READY FOR USE, AND THEREFORE NOT VALID, UNLESS THEY ARE SEALED, SIGNED AND DATED.

Copyright, Ltd 2023

Consultant

AINSWORTH ASSOCIATES
MECHANICAL ENGINEERS
1420 HOLCOMB AVE., SUITE 201
RENO, NV 89502
TEL: 775-329-9100
4557 GREENVIEW DR.
EL DORADO HILLS, CA 95762
TEL: 916-737-6014
www.aa-me.com

JOB 2021-065

PLEASE RECYCLE

Project

CITY OF FERNLEY CRRC

Job No: 21-058.00

Owner

CITY OF FERNLEY

PROGRESS NOT FOR CONSTRUCTION

50% CONSTRUCTION DOCUMENTS

REVISIONS		
REV	DATE	DESCRIPTION

Sheet Title

PLUMBING PARTIAL FLOOR PLAN - BASE BID

Date: MARCH 21, 2023

Sheet No:

P1.11

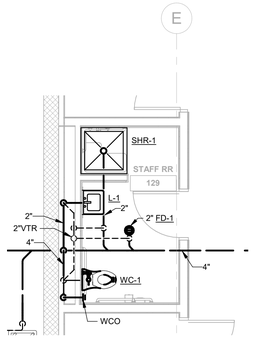

PLUMBING ENLARGED FLOOR PLAN - BASE BID - RR 129 WASTE AND VENT

SCALE: 1/4" = 1'-0"

1 P2.11 N

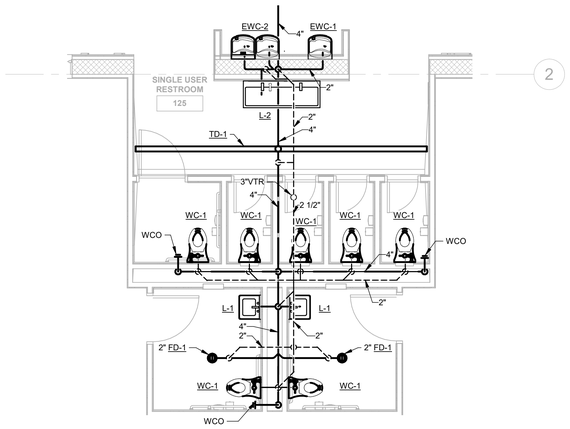

PLUMBING ENLARGED FLOOR PLAN - BASE BID - GN RR 125 WASTE AND VENT

SCALE: 1/4" = 1'-0"

2 P2.11 N

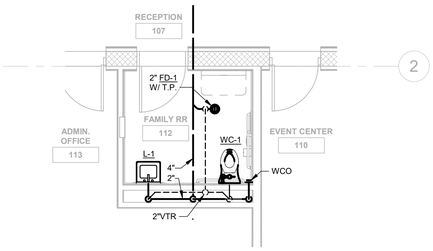

PLUMBING ENLARGED FLOOR PLAN - BASE BID - FAMILY RR 112 WASTE AND VENT

SCALE: 1/4" = 1'-0"

3 P2.11 N

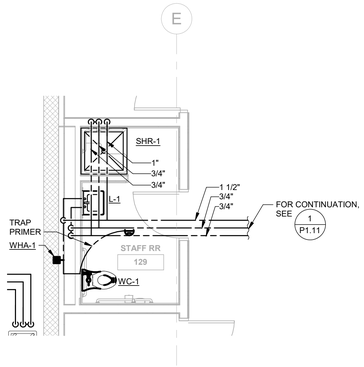

PLUMBING ENLARGED FLOOR PLAN - BASE BID - RR 129 WATER AND UTILITIES

SCALE: 1/4" = 1'-0"

4 P2.11 N

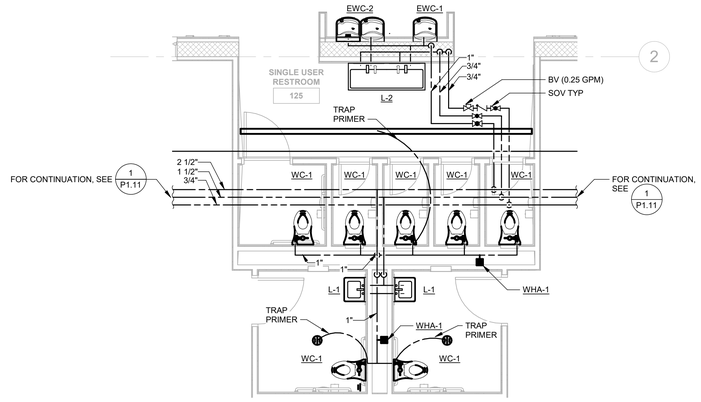

PLUMBING ENLARGED FLOOR PLAN - BASE BID - GN RR 125 WATER AND UTILITIES

SCALE: 1/4" = 1'-0"

5 P2.11 N

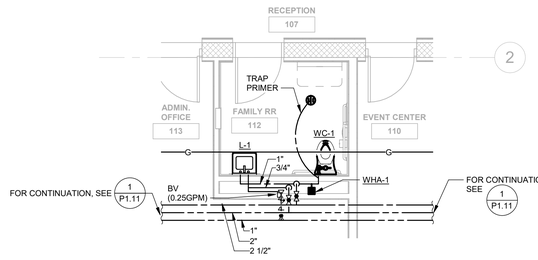

PLUMBING ENLARGED FLOOR PLAN - BASE BID - FAMILY RR 112 WATER AND UTILITIES

SCALE: 1/4" = 1'-0"

6 P2.11 N

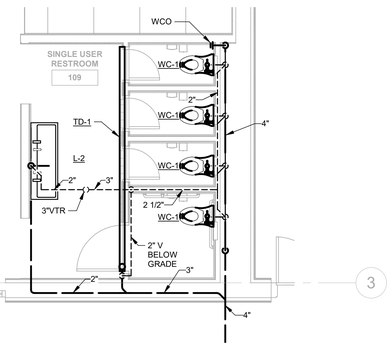

PLUMBING ENLARGED FLOOR PLAN - BASE BID - GN RR 109 WASTE AND VENT

SCALE: 1/4" = 1'-0"

7 P2.11 N

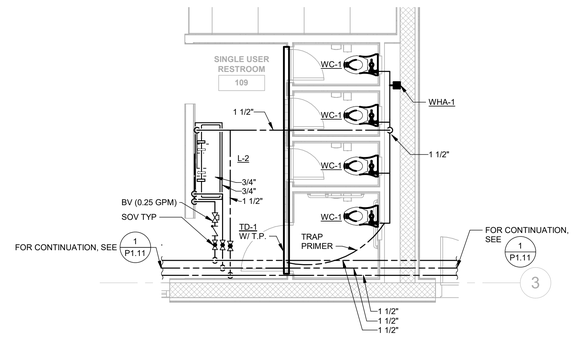

PLUMBING ENLARGED FLOOR PLAN - BASE BID - GN RR 109 WATER AND UTILITIES

SCALE: 1/4" = 1'-0"

8 P2.11 N

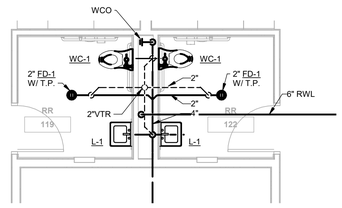

PLUMBING ENLARGED FLOOR PLAN - BASE BID - RR 119, 122 WASTE AND VENT

SCALE: 1/4" = 1'-0"

9 P2.11 N

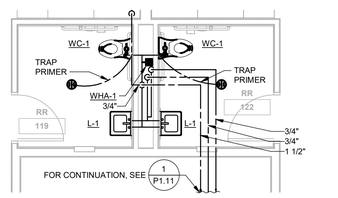

PLUMBING ENLARGED FLOOR PLAN - BASE BID - RR 119, 122 WATER AND UTILITIES

SCALE: 1/4" = 1'-0"

10 P2.11 N

tsk
225 South Arlington Avenue
Reno NV, 89501
phone: 775.857.2949
fax: 775.857.2403
www.tska.com

THESE DRAWINGS AND SPECIFICATIONS ARE THE PROPERTY OF TATE SNYDER KIMSEY ARCHITECTS AND MAY NOT BE REPRODUCED OR USED FOR ANY PURPOSE WITHOUT THE ARCHITECTS WRITTEN CONSENT. AS INSTRUMENTS OF SERVICE, THESE DOCUMENTS ARE NOT FINAL AND READY FOR USE, AND THEREFORE NOT VALID, UNLESS THEY ARE SEALED, SIGNED AND DATED.

Copyright, Ltd 2023

Consultant

AINSWORTH ASSOCIATES
MECHANICAL ENGINEERS
1420 HOLCOMB AVE., SUITE 201
RENO, NV 89502
TEL: 775-329-9100
4557 GREENVIEW DR.
EL DORADO HILLS, CA 95762
TEL: 916-737-6014
www.aa-me.com

JOB 2021-065

PLEASE RECYCLE

Project

CITY OF FERNLEY CRRC

Job No: 21-058.00

Owner

CITY OF FERNLEY

PROGRESS NOT FOR CONSTRUCTION

50% CONSTRUCTION DOCUMENTS

REVISIONS		
REV	DATE	DESCRIPTION

Sheet Title

PLUMBING ENLARGED FLOOR PLANS - BASE BID

Date: MARCH 21, 2023

Sheet No:

P2.11

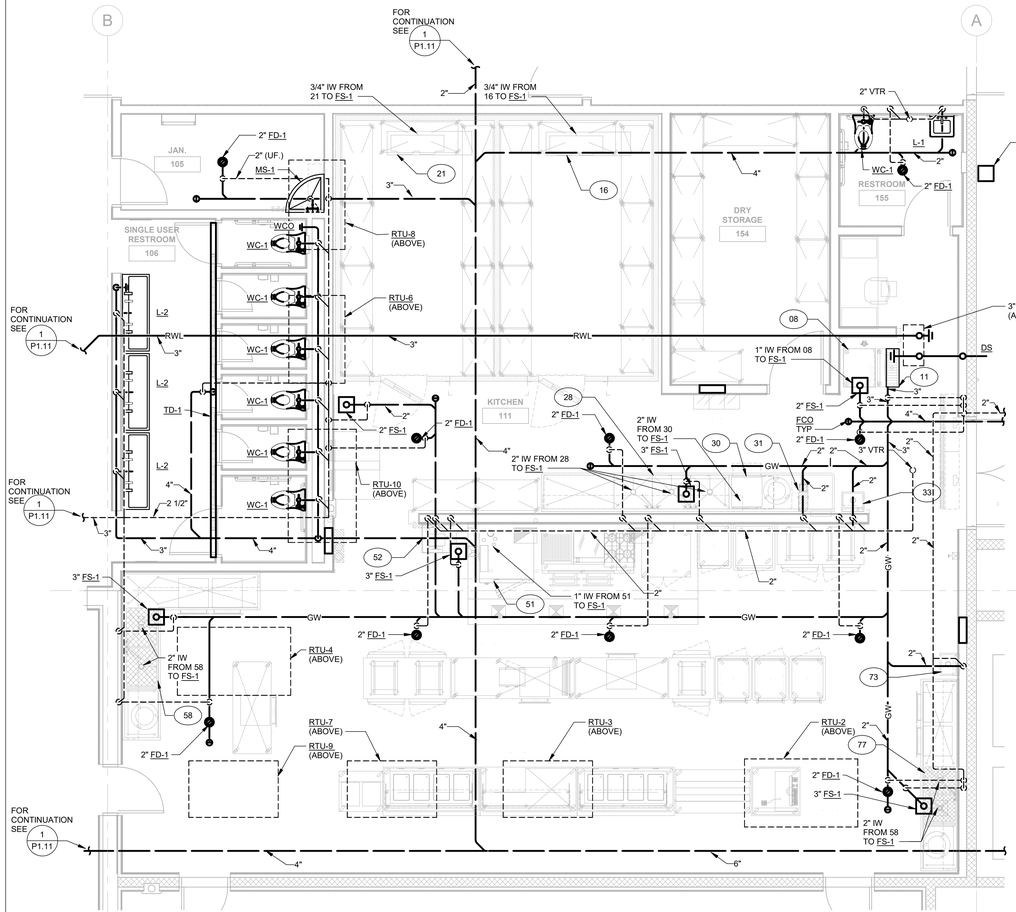

PLUMBING ENLARGED FLOOR PLAN - BASE BID - KITCHEN & GN RR 106 WASTE AND VENT

SCALE: 1/4" = 1'-0"

1 P2.12

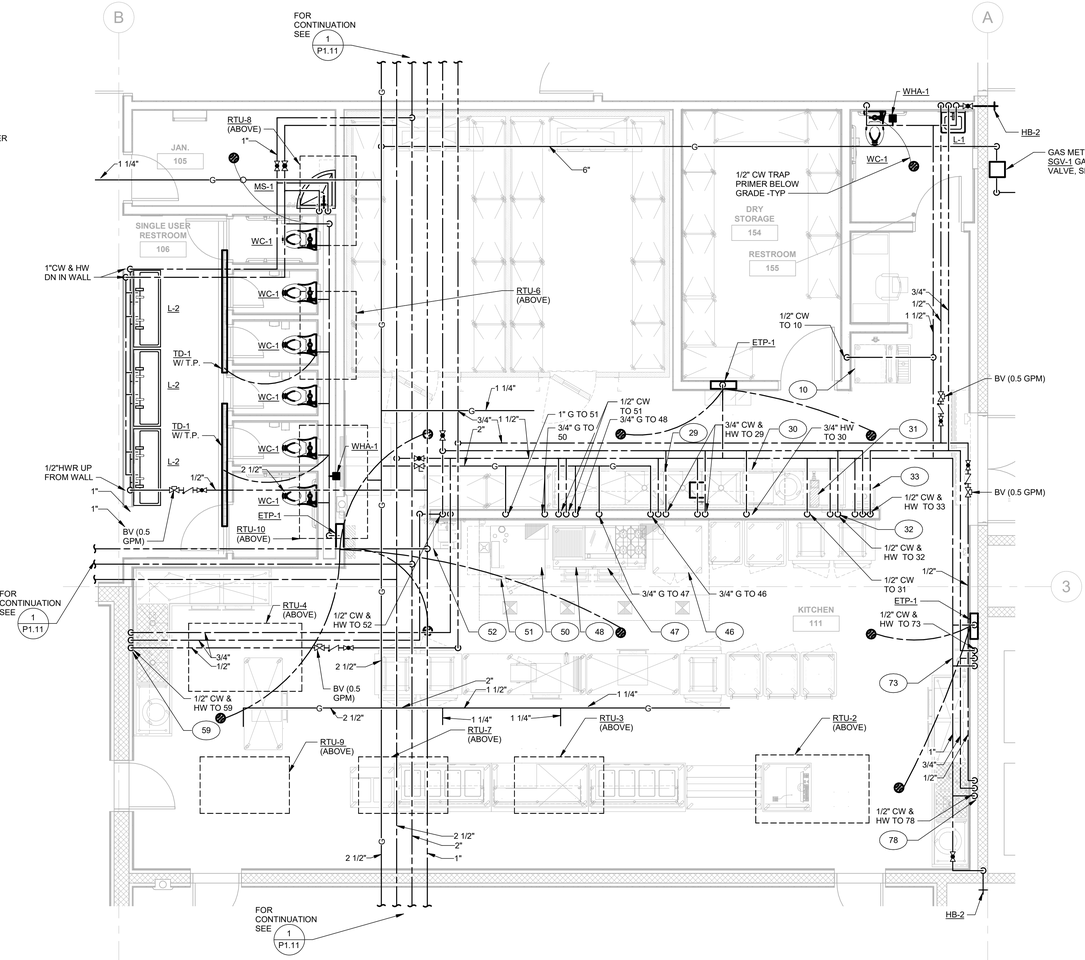

PLUMBING ENLARGED FLOOR PLAN - BASE BID - KITCHEN & GN RR 106 WATER AND UTILITIES

SCALE: 1/4" = 1'-0"

2 P2.12

tsk
225 South Arlington Avenue
Reno NV, 89501
phone: 775.857.2949
fax: 775.857.2403
www.tska.com

THESE DRAWINGS AND SPECIFICATIONS ARE THE PROPERTY OF TATE SNYDER KIMSEY ARCHITECTS AND MAY NOT BE REPRODUCED OR USED FOR ANY PURPOSE WITHOUT THE ARCHITECTS WRITTEN CONSENT. AS INSTRUMENTS OF SERVICE, THESE DOCUMENTS ARE NOT FINAL AND READY FOR USE, AND THEREFORE NOT VALID, UNLESS THEY ARE SEALED, SIGNED AND DATED.

Copyright, Ltd 2023

Consultant

AINSWORTH ASSOCIATES
MECHANICAL ENGINEERS
1420 HOLCOMB AVE., SUITE 201
RENO, NV 89502
TEL: 775-329-9100
4557 GREENVIEW DR.
EL DORADO HILLS, CA 95762
TEL: 916-737-6014
www.aa-me.com
JOB 2021-065

PLEASE RECYCLE

Project

CITY OF FERNLEY CRRC

Job No: 21-058.00

Owner

CITY OF FERNLEY

PROGRESS NOT FOR CONSTRUCTION

50% CONSTRUCTION DOCUMENTS

REVISIONS		
REV	DATE	DESCRIPTION

Sheet Title

PLUMBING ENLARGED KITCHEN FLOOR PLANS - BASE BID

Date: MARCH 21, 2023

Sheet No:

P2.12

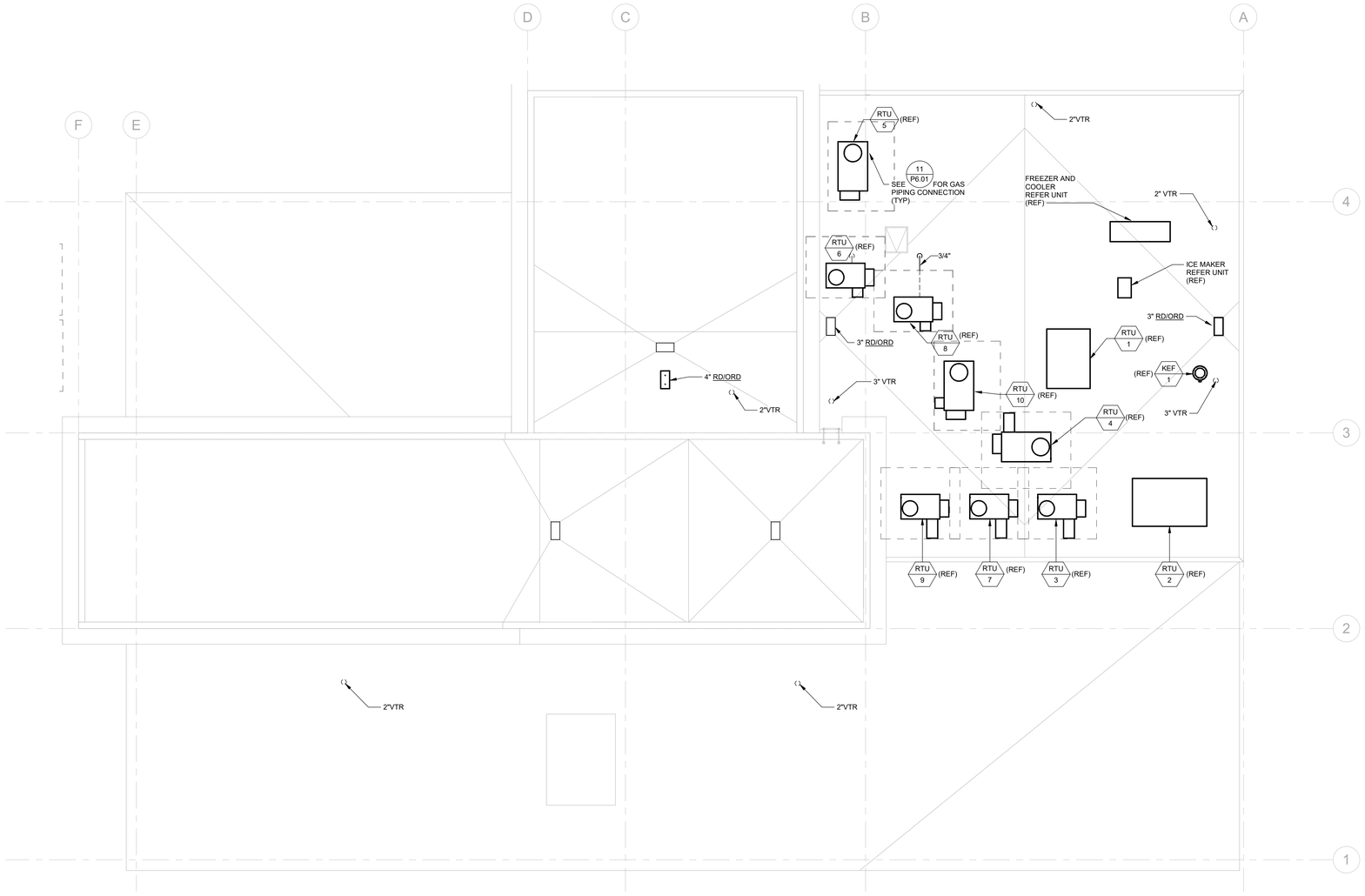

PLUMBING PARTIAL ROOF PLAN - BASE BID (1 / P4.01)

SCALE: 1/8" = 1'-0"

N

tsk
225 South Arlington Avenue
Reno NV, 89501
phone: 775.857.2949
fax: 775.857.2403
www.tska.com

THESE DRAWINGS AND SPECIFICATIONS ARE THE PROPERTY OF TATE SNYDER KIMSEY ARCHITECTS AND MAY NOT BE REPRODUCED OR USED FOR ANY PURPOSE WITHOUT THE ARCHITECTS WRITTEN CONSENT. AS INSTRUMENTS OF SERVICE, THESE DOCUMENTS ARE NOT FINAL AND READY FOR USE, AND THEREFORE NOT VALID, UNLESS THEY ARE SEALED, SIGNED AND DATED.

Copyright, Ltd 2023

Consultant

AINSWORTH ASSOCIATES
MECHANICAL ENGINEERS
1420 HOLCOMB AVE., SUITE 201
RENO, NV 89502
TEL: 775-329-9100
4557 GREENVIEW DR.
EL DORADO HILLS, CA 95762
TEL: 916-737-6014
www.aa-me.com

JOB 2021-065

PLEASE RECYCLE

Project

CITY OF FERNLEY CRRC

Job No: 21-058.00

Owner

CITY OF FERNLEY

PROGRESS
NOT FOR CONSTRUCTION

50% CONSTRUCTION DOCUMENTS

REVISIONS		
REV	DATE	DESCRIPTION

Sheet Title

PLUMBING PARTIAL ROOF PLAN - BASE BID

Date: MARCH 21, 2023

Sheet No:

P4.01

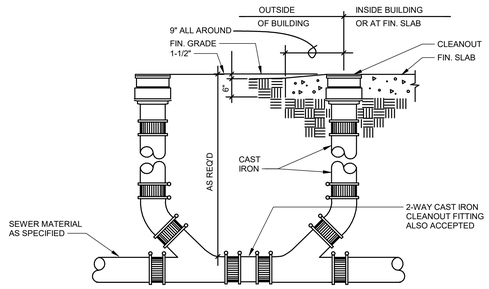

2-WAY CLEANOUT AT GRADE

1 P6.01

SCALE: NONE

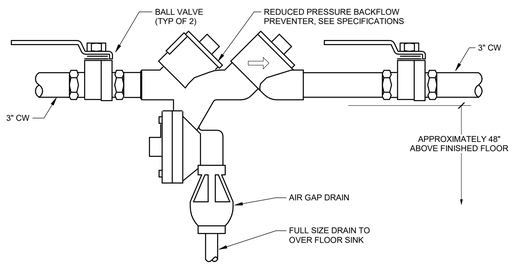

BACKFLOW PREVENTER ASSEMBLY

2 P6.01

SCALE: NONE

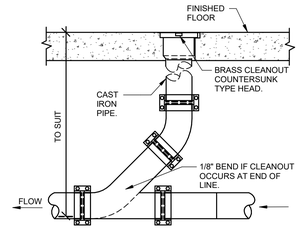

CLEANOUT TO FLOOR DETAIL

3 P6.01

SCALE: NONE

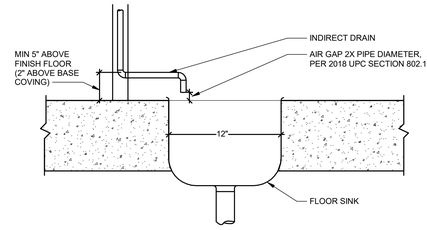

FLOOR SINK INDIRECT DRAINS

4 P6.01

SCALE: NONE

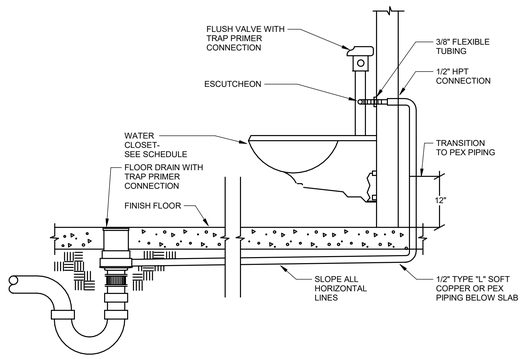

FLUSH VALVE/TRAP PRIMER

5 P6.01

SCALE: NONE

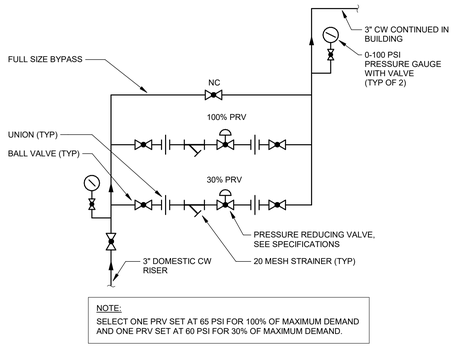

NOTE:
SELECT ONE PRV SET AT 65 PSI FOR 100% OF MAXIMUM DEMAND AND ONE PRV SET AT 60 PSI FOR 30% OF MAXIMUM DEMAND.

PRESSURE REDUCING STATION

6 P6.01

SCALE: NONE

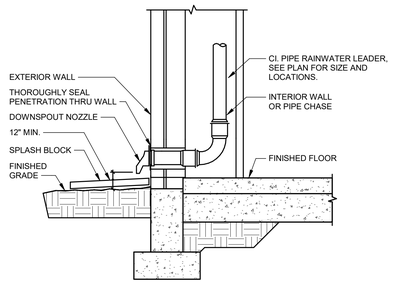

OVERFLOW RAINWATER LEADER DOWNSPOUT

7 P6.01

SCALE: NONE

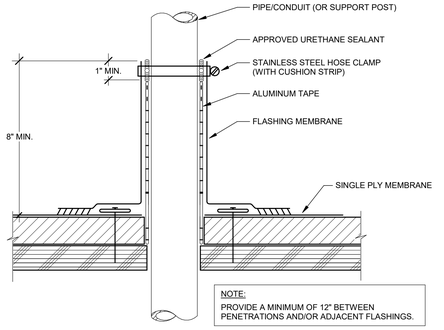

NOTE:
PROVIDE A MINIMUM OF 12" BETWEEN PENETRATIONS AND/OR ADJACENT FLASHINGS.

TYPICAL VENT THRU ROOF DETAIL

8 P6.01

SCALE: NONE

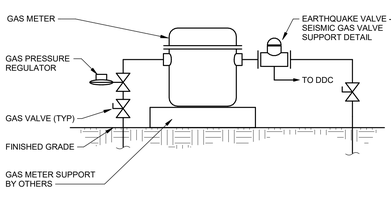

SEISMIC GAS VALVE

9 P6.01

SCALE: NONE

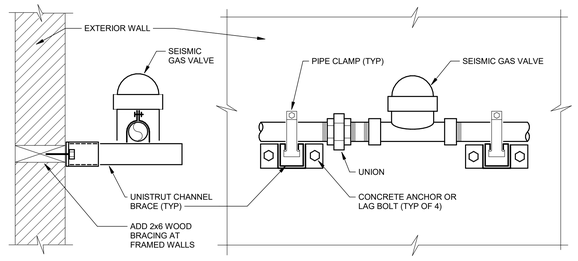

HORIZONTAL

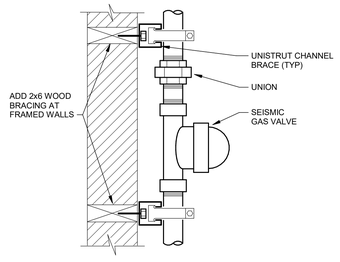

VERTICAL

NOTE:
CONTRACTOR SHALL VERIFY REQUIRED CONFIGURATION OF SEISMIC GAS VALVE (HORIZONTAL OR VERTICAL) PRIOR TO PREPARING SUBMITTAL AND PRIOR TO ORDERING SEISMIC VALVE.

SEISMIC GAS VALVE SUPPORT

10 P6.01

SCALE: NONE

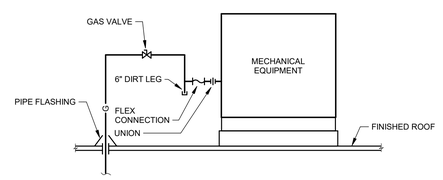

GAS PIPING CONNECTION

11 P6.01

SCALE: NONE

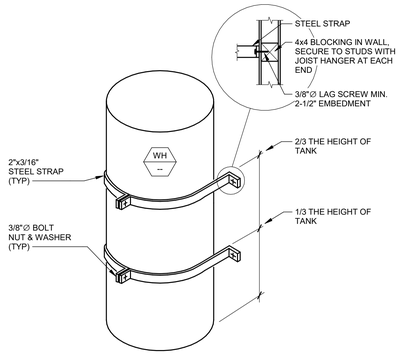

WATER HEATER SECUREMENT

12 P6.01

SCALE: NONE

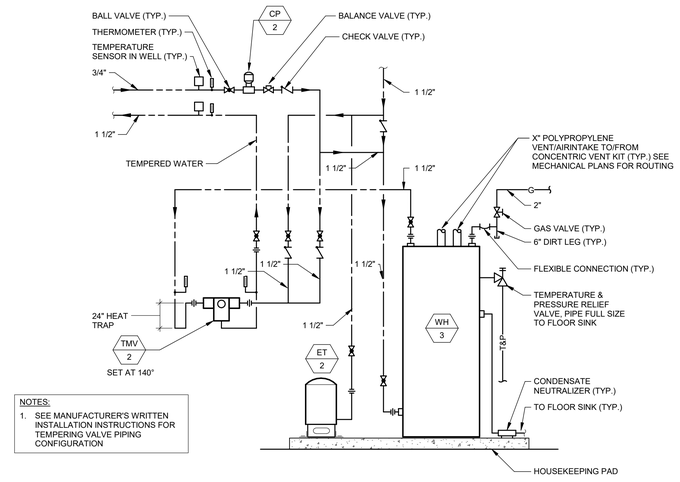

NOTES:
1. SEE MANUFACTURER'S WRITTEN INSTALLATION INSTRUCTIONS FOR TEMPERING VALVE PIPING CONFIGURATION

SINGLE WATER HEATER WITH TEMPERING VALVE

13 P6.01

SCALE: NONE

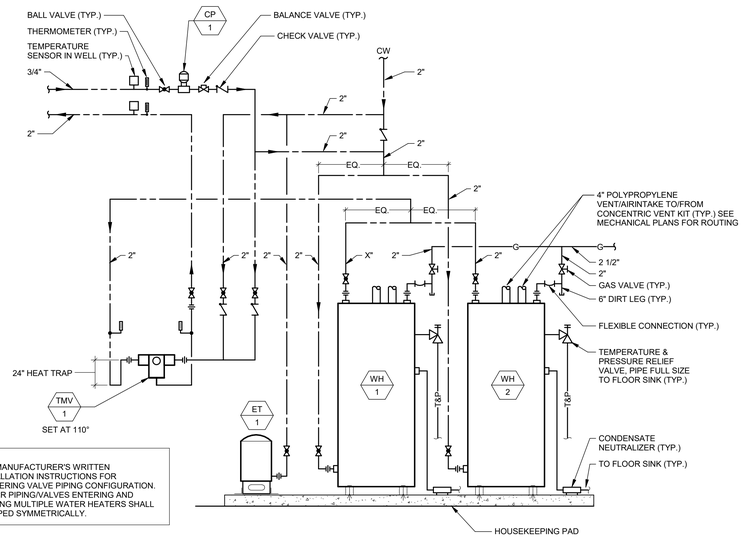

NOTES:
1. SEE MANUFACTURER'S WRITTEN INSTALLATION INSTRUCTIONS FOR TEMPERING VALVE PIPING CONFIGURATION.
2. WATER PIPING/VALVES ENTERING AND LEAVING MULTIPLE WATER HEATERS SHALL BE PIPED SYMMETRICALLY.

DUPLEX WATER HEATER WITH TEMPERING VALVE

14 P6.01

SCALE: NONE

tsk
225 South Arlington Avenue
Reno NV, 89501
phone: 775.857.2949
fax: 775.857.2403
www.tska.com

THESE DRAWINGS AND SPECIFICATIONS ARE THE PROPERTY OF TATE SNYDER KIMSEY ARCHITECTS AND MAY NOT BE REPRODUCED OR USED FOR ANY PURPOSE WITHOUT THE ARCHITECTS WRITTEN CONSENT. AS INSTRUMENTS OF SERVICE, THESE DOCUMENTS ARE NOT FINAL AND READY FOR USE, AND THEREFORE NOT VALID, UNLESS THEY ARE SEALED, SIGNED AND DATED.
Copyright, Ltd 2023

Consultant

AINSWORTH ASSOCIATES
MECHANICAL ENGINEERS
1420 HOLCOMB AVE., SUITE 201
RENO, NV 89502
TEL: 775-329-9100
4557 GREENVIEW DR.
EL DORADO HILLS, CA 95762
TEL: 916-737-6014
www.aa-me.com

JOB 2021-065

PLEASE RECYCLE

Project

CITY OF FERNLEY CRRC

Job No: 21-058.00

Owner

CITY OF FERNLEY

PROGRESS NOT FOR CONSTRUCTION

50% CONSTRUCTION DOCUMENTS

REVISIONS

REV	DATE	DESCRIPTION

Sheet Title

PLUMBING DETAILS

Date: MARCH 21, 2023

Sheet No:

P6.01

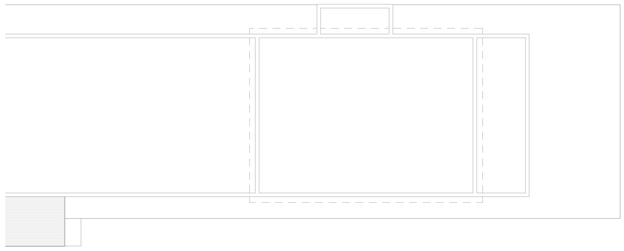

PLUMBING SITE PLAN (1 / PS1.01)
SCALE: 1" = 10'-0"

N

tsk
225 South Arlington Avenue
Reno NV, 89501
phone: 775.857.2949
fax: 775.857.2403
www.tska.com

THESE DRAWINGS AND SPECIFICATIONS ARE THE PROPERTY OF TATE SNYDER KIMSEY ARCHITECTS AND MAY NOT BE REPRODUCED OR USED FOR ANY PURPOSE WITHOUT THE ARCHITECTS WRITTEN CONSENT. AS INSTRUMENTS OF SERVICE, THESE DOCUMENTS ARE NOT FINAL AND READY FOR USE, AND THEREFORE NOT VALID, UNLESS THEY ARE SEALED, SIGNED AND DATED.

Copyright, Ltd 2023

Consultant

AINSWORTH ASSOCIATES
MECHANICAL ENGINEERS
1420 HOLCOMB AVE., SUITE 201
RENO, NV 89502
TEL: 775-329-9100
4557 GREENVIEW DR.
EL DORADO HILLS, CA 95762
TEL: 916-737-6014
www.aa-me.com

JOB 2021-065

PLEASE RECYCLE

Project
CITY OF FERNLEY CRRC

Job No: 21-058.00

Owner
CITY OF FERNLEY

PROGRESS
NOT FOR CONSTRUCTION

50% CONSTRUCTION DOCUMENTS

REVISIONS		
REV	DATE	DESCRIPTION

Sheet Title
PLUMBING SITE PLAN

Date: MARCH 21, 2023

Sheet No:
PS1.01

FIRE ALARM MASTER LEGEND & GENERAL NOTES

▬	FIRE ALARM CONTROL PANEL (FACP) OR REMOTE ANNUNCIATOR PANEL (FAAP): FLUSH MOUNTED, 60" TO CL OF LCD DISPLAY		HORN: CEILING MOUNT
▬	FIRE ALARM CONTROL PANEL (FACP) / REMOTE ANNUNCIATOR PANEL (FAAP) / VOICE EVAC PANEL (FAVP): SURFACE MOUNTED, 60" TO CL OF LCD DISPLAY.	cd	HORN/STROBE: WALL MOUNT 80" AFF TO BOTTOM OF LENS NOTE CANDELA
▭	BOOSTER POWER SUPPLY (BPS): SURFACE MOUNTED	cd	HORN/STROBE: CEILING MOUNT NOTE CANDELA
F	MANUAL PULL STATION: MOUNT AT 48" TO CENTER LINE UNO	W	SPEAKER: WALL MOUNT 90° AFF TO TOP OF DEVICE AND NOT LESS THAN 6" BELOW CEILING
S P I / S P I	SMOKE DETECTOR: (P) PHOTOELECTRIC, (I) IONIZATION, (M) MULTI TECHNOLOGY, (H) HORN (LO) LOCAL-ONLY 120V W/INTEGRAL BATTERY: CEILING MOUNT / WALL MOUNT	W	SPEAKER: CEILING MOUNT
		cd W	SPEAKER/STROBE: WALL MOUNT 80" AFF TO BOTTOM OF LENS NOTE CANDELA
S H LO / S H LO	LOCAL-ONLY SMOKE DETECTOR: 120V, INTEGRAL BATTERY, WITH HORN & STROBE, CEILING MOUNT OR WALL MOUNT AT 12" BELOW CEILING.	SS cd W	SPEAKER/STROBE: CEILING MOUNT NOTE CANDELA
S BT / S BR	BEAM DETECTOR: (BT) TRANSMITTER, (BR) RECEIVER WALL MOUNT PER MANUFACTURERS SPECIFICATIONS	15cd	STROBE: WALL MOUNT 80" AFF TO BOTTOM OF LENS NOTE CANDELA
	HEAT DETECTOR: (ROR) RATE OF RISE, (F) FIXED, TEMP 135° OR 190° CEILING MOUNT / WALL MOUNT	cd	STROBE: CEILING MOUNT NOTE CANDELA
MM	MONITOR MODULE: AT OR NEAR DEVICE	F	FIRE BELL: MOUNTED PER LOCAL CODE
CR	CONTROL RELAY MODULE: AT OR NEAR DEVICE	J	FIRE ALARM JUNCTION BOX, W/RED COVER & FA CKT LABEL
IM	ISOLATOR MODULE: AT OR NEAR DEVICE	KH	HOOD FIRE SUPPRESSION SYSTEM CONNECTION
PM	MULTI-VOLTAGE RELAY: AT OR NEAR DEVICE	AL	REMOTE ALARM LAMP
SM	SINGLE INPUT MODULE: AT OR NEAR DEVICE	FS	FIRE SPRINKLER FLOW SWITCH
DM	DUAL INPUT MODULE: AT OR NEAR DEVICE	TS	FIRE SPRINKLER TAMPER SWITCH
DH	MAGNETIC DOOR HOLDER: SYSTEM POWERED AND CONTROLLED UNO, MOUNTING PER PLANS	FSD	FIRE/SMOKE DAMPER: COORDINATE INSTALLATION AND MOTOR DE-ENERGIZE PROCEDURES WITH MECHANICAL CONTRACTOR. ELECTRICAL CONTRACTOR SHALL PROVIDE RACEWAY, POWER, AND CONTROL WIRE AS NECESSARY.
J/H	FIREMAN'S PHONE: MOUNTED AT +48" TO TOP UNO, JACK OR HANDSET		
EOLR	END OF LINE RESISTOR	S D	DUCT SMOKE DETECTOR: SUPPLER AND/OR RETURN PER MECHANICAL CODE.
	HORN: WALL MOUNT 90° AFF TO TOP OF DEVICE AND NOT LESS THAN 6" BELOW CEILING		

NOTES:

1. THE CONTRACTOR SHALL SERVE AS THE CITY/STATE LICENSED DESIGNER AND INSTALLER FOR THE FIRE ALARM SYSTEM. A COMPLETE TURN-KEY SYSTEM SHALL BE DESIGNED, FURNISHED, AND INSTALLED BY THE CONTRACTOR INCLUDING, BUT NOT LIMITED TO THE CONTROL PANEL, DEVICES, MODULES, EQUIPMENT ETC. REQUIRED FOR A COMPLETE SYSTEM. INSTALL AN APPROVED MANUAL, AUTOMATIC, OR MANUAL AND AUTOMATIC FIRE ALARM SYSTEM IN ACCORDANCE WITH THE PROVISIONS OF THE IFC, IBC, NFPA-70, NFPA-72, NFPA-101, NEC 760, ADA AND LOCAL AHJ REQUIREMENTS.
2. THE CONTRACTOR'S DESIGN AND BID SHALL BE BASED ON ALL PROJECT DRAWINGS AND SPECIFICATIONS FOR ALL DISCIPLINES, INCLUDING BUT NOT LIMITED TO MECHANICAL, FIRE SPRINKLER, KITCHEN, ARCHITECTURAL, SECURITY, BUILDING AUTOMATION, AND STRUCTURAL SYSTEMS. FIRE ALARM DEVICES AS SHOWN ON PLANS ARE SHOWN DIAGRAMMATICALLY FOR BIDDING PURPOSES ONLY AND IS INDICATED ON THE DRAWINGS AND IN THE SPECIFICATIONS AS MINIMUM CRITERIA. THE CONTRACTOR SHALL COORDINATE WITH THE LOCAL AHJ AND COMPLY WITH APPLICABLE CODES FOR ANY ADDITIONAL DEVICES OR EQUIPMENT THAT MAY BE REQUIRED.
3. INSTALLATION OF THE FIRE ALARM SYSTEM SHALL NOT BE STARTED UNTIL DETAILED PLANS AND SPECIFICATIONS HAVE BEEN APPROVED BY THE LOCAL AHJ AND THE ENGINEER OF RECORD.
4. FIRE ALARM SYSTEM SHALL BE CLASS 1 CIRCUITING AS REQUIRED BY LOCAL AHJ AND NFPA-70.
5. ALL FIRE ALARM WIRING TO BE RUN IN 3/4" CONDUIT.
6. BATTERY BACKUP SYSTEM SHALL BE CALCULATED TO PROVIDE A MINIMUM OF 24 HOURS OF STANDBY AND A MINIMUM OF 5 MINUTES OF ALARM OR PER AHJ REQUIREMENTS.
7. CONNECT TO THE TELEPHONE SYSTEM WITH DIAL OUT BY POINT.
8. FIRE ALARM NOTIFICATION APPLIANCE CANDELA VALUE SHALL MEET THE REQUIREMENTS OF NFPA 72, BASED ON ROOM SIZE. IT IS THE CONTRACTORS RESPONSIBILITY TO ADD ADDITIONAL NOTIFICATION APPLIANCES AS REQUIRED TO COMPLY WITH THE REQUIREMENTS OF NFPA 72.
9. MANUAL PULL STATIONS SHALL BE MOUNTED 48" TO CENTER OF DEVICE.
10. DETECTORS ARE NOT TO BE LOCATED IN A DIRECT AIRFLOW OR CLOSER THAN 3' FROM AN AIR SUPPLY DIFFUSER OR RETURN AIR OPENING IN ACCORDANCE WITH NFPA-72 A.17.7.4.1, (2010).
11. DETECTOR LOCATION FOR DOOR HOLD ACTIVATION SHALL BE PER NFPA-72, 17.7.5.6.6.1, (1-3), (2010), WHEN REQUIRED.
12. AREA SMOKE DETECTION AND DUCT DETECTORS SHALL SHUT DOWN ALL MECHANICAL UNITS.
13. UPON COMPLETION OF THE INSTALLATION OF THE FIRE ALARM SYSTEM, A FINAL INSPECTION AND TEST OF THE ENTIRE SYSTEM SHALL BE MADE IN THE PRESENCE OF THE LOCAL AHJ. A COPY OF THE RECORD OF COMPLETION AND CERTIFICATE OF OCCUPANCY SHALL BE SUBMITTED TO THE ENGINEER OF RECORD.
14. THE CONTRACTOR SHALL ENSURE ADEQUATE AUDIBILITY OF THE VOICE MESSAGES UPON PROJECT COMPLETION AND RELOCATE OR ADD SPEAKERS TO MEET THIS REQUIREMENT AT NO COST TO THE OWNER.
15. PROVIDE DOCUMENT BOX ADJACENT TO FACP WITH RECORD DRAWINGS (PRINTED) WITH USB DRIVE CONTAINING LATEST PROGRAM COPY AND ELECTRONIC RECORD DRAWINGS.
16. THE CONTRACTOR SHALL PRODUCE A COMPLETE SET OF DRAWINGS, PRODUCT SUBMITTALS AND CALCULATIONS FOR A COMPLETE FIRE ALARM SYSTEM INSTALLATION. DRAWINGS SHALL BE PREPARED BY A LICENSED FIRE ALARM SUB-CONTRACTOR (NICET II & NEVADA STATE FIRE MARSHAL 'F' CARD). THESE DRAWINGS SHALL BEAR THE NAME OF THE CONTRACTOR AND QUALIFYING CERTIFICATIONS. ALL DRAWINGS SHALL BE PREPARED BY THE CONTRACTOR UTILIZING THEIR OWN DEVICE LAYOUT, WIRING, SCHEDULES, CALCULATIONS, AND ALL OTHER REQUIREMENTS FOR A COMPLETE PACKAGE. FLOOR PLANS (ELECTRONIC) WILL BE PROVIDED TO THE AWARDED CONTRACTOR UPON REQUEST. DOCUMENTS PROVIDED ARE FOR GUIDANCE ONLY AND REFER TO PROPOSED DEVICE LOCATIONS AND WIRING REQUIREMENTS. THE CONTRACTOR SHALL PROVIDE A COMPLETE LAYOUT AND SYSTEM DESIGN. THE CONTRACTOR IS RESPONSIBLE FOR OBTAINING A PERMIT WITH THE LOCAL AUTHORITY WITH THEIR PREPARED DOCUMENTS.

ONELINE DIAGRAM NOTES

1. ONELINE DIAGRAM IS FOR REFERENCE ONLY. CONTRACTOR SHALL PROVIDE A ONELINE DIAGRAM THAT SHOWS ALL DEVICES, NEW AND EXISTING, AS THEY ARE CONNECTED ON THE FLOOR PLAN.

SHEET NOTES

(1) ANNUNCIATOR SHALL BE CAPABLE OF VIEWING EVENTS AND OPERATING THE FIRE ALARM SYSTEM. A KEY SHALL BE REQUIRED FOR OPERATING OR RESETTING THE SYSTEM FROM THIS LOCATION.

(2) PROVIDE AMPLIFIER CABINET SIZED FOR SYSTEM LOAD.

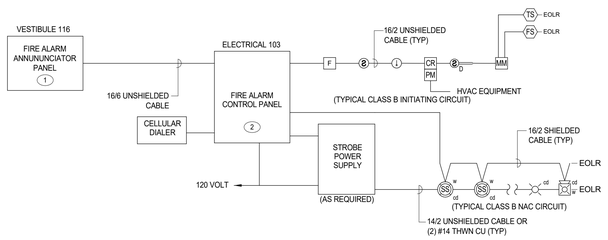

1 E0.01 FIRE ALARM ONELINE DIAGRAM

Not To Scale

ELECTRICAL LEGEND

- PANELBOARD: SURFACE MOUNTED
- PANELBOARD: FLUSH MOUNTED
- SWITCHBOARD OR DISTRIBUTION PANEL
- XF TRANSFORMER
- PULLBOX / VAULT
- MOTOR STARTER
- COMBINATION MOTOR STARTER
- COMBINATION MOTOR STARTER PROVIDED BY OTHERS
- F DISCONNECT SWITCH - FUSIBLE (FUSED PER EQUIP. NAMEPLATE)
- N DISCONNECT SWITCH - NON-FUSIBLE
- DISCONNECT SWITCH PROVIDED BY OTHERS
- VARIABLE FREQUENCY DRIVE
- VARIABLE FREQUENCY DRIVE PROVIDED BY OTHERS
- CB ENCLOSED CIRCUIT BREAKER
- GROUND ROD
- FIRE ALARM MANUAL PULL STATION OR EMERGENCY PUSHBUTTON
- M REMOTE METER

- S SINGLE POLE SWITCH 48" AFF
- S_3 THREE WAY SWITCH 48" AFF
- S_4 FOUR WAY SWITCH 48" AFF
- S_K KEY OPERATED SWITCH 48"
- S_L SWITCH WITH LIGHTED HANDLE
- S_M MANUAL MOTOR STARTER
- S_P SWITCH WITH PILOT LIGHT 48" AFF
- S_T TIME WALL SWITCH EQUAL TO HUBBELL DT2000W 48" AFF
- DIMMER OPERATED SWITCH 48" AFF
- OCCUPANCY SENSOR - WALL MOUNTED 48" AFF
- D 0-10V DIMMING OCCUPANCY SENSOR - WALL MOUNTED 48" AFF EQUAL TO SENSOR SWITCH WSX-D
- OS OCCUPANCY SENSOR - CEILING MOUNTED. PROVIDE WITH POWER PACK PER MFG REQUIREMENTS.
- OS OCCUPANCY SENSOR - CORNER MOUNTED. PROVIDE WITH POWER PACK PER MFG REQUIREMENTS.
- CONTROL STATION
- CONTACTOR OR RELAY
- PC PHOTOELECTRIC CELL (ON ROOF FACING NORTH UNO)
- TC TIMECLOCK

- CONDUIT/RACEWAY IN WALL OR ABOVE CEILING
- CONDUIT/RACEWAY BELOW GRADE OR BELOW FLOOR
- BREAK OR RUN CONTINUES
- —OH— OVERHEAD SERVICE
- — P — PRIMARY
- — S — SECONDARY
- — C — COMMUNICATIONS OR SIGNAL
- — T — TELEPHONE
- — TV — TELEVISION
- — • — LOW VOLTAGE AND/OR CONTROL WIRING
- — - - — EMERGENCY CIRCUIT
- CONDUIT/RACEWAY STUB OUT: MARK AND CAP (SITE)
- CONDUIT/RACEWAY SLEEVE

E = EQUIPMENT
H = ELECTRIC HEAT
K = KITCHEN EQUIP
L = LIGHTING
M = MOTOR
M1 = LARGEST MOTOR
R = RECEPTACLES

- SINGLE RECEPTACLE: 20A, 125V, NEMA 5-20, +18" AFF
- DUPLEX RECEPTACLE: 20A, 125V, NEMA 5-20, +18" AFF
- DUPLEX RECEPTACLE: HALF SWITCHED, +18" AFF
- DUPLEX RECEPTACLE GFI TYPE - 20A, 125V, NEMA 5-20 GFI +18" AFF
- QUAD RECEPTACLE: 20A, 125V, NEMA 5-20, +18" AFF
- ISOLATED GROUND TYPE RECEPTACLE (ORANGE TRIANGLE), 20A, 125V, NEMA 5-20IG, +18" AFF
- COMBO DUAL USB CHARGER / DUPLEX RECEPTACLE, 5.1A, (1) TYPE A & (1) TYPE C USB (3.1, 3.0, 2.0 AND 1.1 COMPATIBLE), 20A, 125V, NEMA 5-20R, +18AFF
- QUAD USB CHARGER, 5.1A, (2) TYPE A & (2) TYPE C USB (3.1, 3.0, 2.0 AND 1.1 COMPATIBLE), +18AFF
- SPECIAL PURPOSE RECEPTACLE: SEE DWGS FOR NEMA CONFIGURATION
- DUPLEX RECEPTACLE: FLOOR MOUNTED
- QUAD RECEPTACLE: FLOOR MOUNTED
- DUPLEX RECEPTACLE: CEILING MOUNTED
- QUAD RECEPTACLE: CEILING MOUNTED
- BLANK GFCI PROTECTIVE DEVICE IN READILY ACCESSIBLE LOCATION (LABEL PROTECTED DEVICES)
- DUPLEX "CLOCK" RECEPTACLE: 125V, NEMA 5-20R, +60" AFF
- X DEVICE MOUNTED AT NON-STANDARD HEIGHT. IF NO HEIGHT SHOWN VERIFY HEIGHT WITH ARCHITECT
- MULTI-OUTLET ASSEMBLY: SPACING PER DWGS

- DATA / VOICE OUTLET: 18" AFF - 1 VOICE, 1 DATA JACK, 2 BLANKS
- DATA / VOICE OUTLET: FLOOR MOUNTED
- MULTI-OUTLET ASSEMBLY: SPACING PER DWGS
- TELEPHONE OUTLET: 18" AFF
- DATA OUTLET: 18" AFF
- DEVICE MOUNTED AT NON-STANDARD HEIGHT. IF NO HEIGHT SHOWN VERIFY HEIGHT WITH ARCHITECT
- S SPEAKER
- TV TELEVISION OUTLET: 18" AFF (UNO)
- TELEPHONE TERMINAL BOARD (TTB)
- VC VOLUME CONTROL
- GROUNDING BAR

* FIXTURE SCHEDULE HAS PRECEDENCE *

- LENGED TROFFER
- VOLUMETRIC TROFFER
- FLANGED TROFFER
- SURFACE MOUNT TROFFER
- STRIP FIXTURE
- DOWNLIGHT
- WALL PACK
- POLE MOUNT
- EMERGENCY LIGHTING UNIT
- EXIT SIGN FIXTURE - SHADED AREA DENOTES LIGHTED FACE - ARROWS INDICATE DIRECTION
- SHADING INDICATES EGRESS FIXTURE

- T THERMOSTAT (PROVIDED BY MECH. CONTRACTOR UNO)
- J JUNCTION BOX (SIZE AS REQUIRED UNO)
- 3 SHEET NOTE DESIGNATION
- F1 FIXTURE DESIGNATION: F1=TYPE (SEE FIXTURE SCH.)
- Δ_3 REVISION DELTA: NUMBER REPRESENTS REVISION
- 1253 FEEDER DESIGNATION
- AHU 2 / 7 EQUIPMENT CONNECTION

- GFI GROUND FAULT INTERRUPTER DEVICE
- M METERING DEVICE
- REMOTE METER
- ST SHUNT TRIP DEVICE
- TRANSFORMER
- CURRENT TRANSFORMER
- G GENERATOR
- # MOTOR - # INDICATES HP
- INTERRUPTER SWITCH
- GFI GROUND FAULT RELAY W/ CT OR SENSOR
- FUSE
- CIRCUIT BREAKER
- DRAWOUT CIRCUIT BREAKER
- A 3 TRANSFER SWITCH (A=AUTOMATIC, M=MANUAL) # FOR POLES 2, 3 OR 4
- SPD SURGE PROTECTION DEVICE

- NORMALLY OPEN (NO) CONTACT
- NORMALLY CLOSED (NC) CONTACT
- C COIL - VOLTAGE PER CONTROL DIAGRAMS
- PILOT LIGHT (LED) PUSH-TO-TEST. LETTER INDICATES COLOR (R=RED, G=GREEN, A=AMBER, Y=YELLOW)
- PILOT LIGHT (LED) NON PUSH-TO-TEST
- THERMAL OVERLOAD
- MAGNETIC OVERLOAD
- PUSH BUTTON NORMALLY OPEN (NO)
- PUSH BUTTON NORMALLY CLOSED (NC)
- H A HAND-OFF-AUTO (HOA) SELECTOR SWITCH
- LIMIT SWITCH NORMALLY OPEN (NO)
- LIMIT SWITCH NORMALLY CLOSED (NC)
- R PUSH BUTTON ILLUMINATED (LED)

TICS = NO. OF #12 WIRES (UNO) IF MORE THAN TWO WITHIN RACEWAY. GROUNDING CONDUCTOR (NOT SHOWN) ALWAYS REQUIRED.
- ISOLATED GROUNDING CONDUCTOR
- NEUTRAL CONDUCTOR
- PHASE CONDUCTOR(S)

BRANCH CIRCUIT (WHEN TIC MARKS ARE NOT SHOWN) = (1) PHASE, (1) NEUTRAL AND (1) GROUNDING CONDUCTOR

HOMERUN TO PANELBOARD OR DEVICE

HA-(1,3,5,3N)G HOMERUN CIRCUIT DESIGNATION
- GROUNDING CONDUCTOR
- NEUTRAL CONDUCTOR (N=1, 2N=2 NEUTRALS, 3N=3 NEUTRALS)
- PHASE CONDUCTOR(S)
- PANELBOARD DESIGNATION

HA-(1,3,5)G HOMERUN CIRCUIT DESIGNATION (3 PHASE CIRCUIT SHOWN)
- GROUNDING CONDUCTOR
- PHASE CONDUCTOR(S)
- PANELBOARD DESIGNATION

NOTE: "(E)" IN HOMERUN INDICATES NEW HOMERUN TO EXISTING PANEL

A	AMPS
ADA	AMERICANS WITH DISABILITIES ACT
AFC	ABOVE FINISHED CEILING
AFCI	ARC-FAULT CIRCUIT INTERRUPTER
AFF	ABOVE FINISHED FLOOR
AFG	ABOVE FINISHED GRADE
AHJ	AUTHORITY HAVING JURISDICTION
AIC	AMP INTERRUPTING CAPACITY
AL	ALUMINUM
ATS	AUTOMATIC TRANSFER SWITCH
AWG	AMERICAN WIRE GAUGE
BC	BARE COPPER
BKR	BREAKER
C	CONDUIT/RACEWAY
CEC	CALIFORNIA ENERGY COMMISSION
CKT	CIRCUIT
CLG	CEILING
CO	CONDUIT/RACEWAY ONLY
CT	CURRENT TRANSFORMER
CU	COPPER
DB	DISTRIBUTION BOARD
DDC	DIRECT DIGITAL CONTROLLER
DPDT	DOUBLE-POLE, DOUBLE-THROW
DPST	DOUBLE-POLE, SINGLE-THROW
DWG	DRAWING
(E)	EXISTING TO REMAIN
ELEC	ELECTRICAL
EM	EMERGENCY
EMT	ELECTRICAL METALLIC TUBING
(F)	FUTURE
FLA	FULL LOAD AMPS
FMC	FLEXIBLE METAL CONDUIT (STEEL)
FPEN	FUSE PER EQUIP. NAMEPLATE
GFI	GROUND FAULT INTERRUPT
GFR	GROUND FAULT RELAY
GND	GROUND
HID	HIGH INTENSITY DISCHARGE
HOA	HAND-OFF-AUTO SWITCH
HP	HORSEPOWER
HSKP	HOUSEKEEPING
IMC	INTERMEDIATE METAL CONDUIT
J-BOX	JUNCTION BOX
K	kcmil (300K = 300 kcmil)
KVA	KILOVOLT AMPS
KW	KILOWATT
LTG	LIGHTING
IG	ISOLATED GROUND
MCB	MAIN CIRCUIT BREAKER
MCM	THOUSAND CIRCULAR MILS
MFG	MANUFACTURER
MLO	MAIN LUGS ONLY
MS	MOTOR STARTER
MSB	MAIN SWITCHBOARD
MTS	MANUAL TRANSFER SWITCH
NC	NORMALLY CLOSED
NEC	NATIONAL ELECTRICAL CODE
NEMA	NATIONAL ELECTRICAL MANUFACTURER'S ASSOCIATION
NIC	NOT IN CONTRACT
NL	NIGHTLIGHT
NO	NORMALLY OPEN
NTS	NOT TO SCALE
NVE	NV ENERGY
P	POLE
PH/(ø)	PHASE
PV	PHOTOVOLTAIC
PNL	PANEL
PTC	PV USA TEST CONDITIONS
PWR	POWER
(R)	RELOCATE/RELOCATED
(RR)	REMOVE AND REPLACE
RAC	RIGID ALUMINUM CONDUIT
RFC	RIGID FIBERGLASS CONDUIT
RSC	RIGID STEEL CONDUIT
SE	SERVICE ENTRANCE
SPD	SURGE PROTECTION DEVICE
SPDT	SINGLE-POLE, DOUBLE-THROW
SPST	SINGLE-POLE, SINGLE-THROW
STC	STANDARD TEST CONDITIONS
SW	SWITCH
TE	TELECOM
TTB	TELEPHONE TERMINATION BOARD
TYP	TYPICAL
UL	UNDERWRITER'S LABORATORY
UNO	UNLESS NOTED OTHERWISE
UNSW	UNSWITCHED
UPS	UNINTERRUPTED POWER SUPPLY
V	VOLTS
VA	VOLT AMPS
VFD	VARIABLE FREQUENCY DRIVE
W	WATTS
WP	WEATHER PROOF
(X)	EXISTING TO BE REMOVED
XFMR OR XF	TRANSFORMER

NOTE: THIS IS A MASTER SYMBOL LIST. IT MAY BE THAT NOT ALL SYMBOLS SHOWN ARE USED WITHIN THIS SET OF PLANS. HEIGHTS GIVEN ARE TO TOP OF BOX.

DRAWING SCHEDULE

SHEET	DESCRIPTION	
E0.01	LEGENDS, FA ONELINE DIAGRAM & DRAWING SCHEDULE	●
E0.02	FIXTURE SCHEDULE AND IECC CALCULATIONS	●
E0.03	ONELINE DIAGRAM AND LOAD CALCULATIONS	●
E0.04	PANEL SCHEDULES	●
E0.05	PANEL SCHEDULES	●
E0.06	DETAILS	●
E0.07	DETAILS	●
E1.01	DEMOLITION SITE PLAN	●
E1.02	NEW WORK SITE PLAN	●
E2.01	LIGHTING PLAN - BASE BID	●
E2.01A	LIGHTING PLAN - ALT A	●
E2.01B	LIGHTING PLAN - ALT B	●
E3.01	POWER PLAN - BASE BID	●
E3.01A	POWER PLAN - ALT A	●
E3.01B	POWER PLAN - ALT B	●
E4.01	MECHANICAL POWER PLAN - BASE BID	●
E4.01A	MECHANICAL POWER PLAN - ALT A	●
E4.01B	MECHANICAL POWER PLAN - ALT B	●
E4.02	ROOF MECHANICAL POWER PLAN - BASE BID	●
E4.02A	ROOF MECHANICAL POWER PLAN - ALT A	●
E4.02B	ROOF MECHANICAL POWER PLAN - ALT B	●
E5.01	FIRE ALARM PLAN - BASE BID	●
E5.01A	FIRE ALARM PLAN - ALT A	●
E5.01B	FIRE ALARM PLAN - ALT B	●
E6.01	KITCHEN POWER PLAN - BASE BID	●
E6.01A	KITCHEN POWER PLAN - ALT A	●
	TOTAL SHEETS IN ISSUE:	26

tsk
225 South Arlington Avenue
Reno NV, 89501
phone: 775.857.2949
fax: 775.857.2403
www.tska.com

THESE DRAWINGS AND SPECIFICATIONS ARE THE PROPERTY OF TATE SNYDER KIMSEY ARCHITECTS AND MAY NOT BE REPRODUCED OR USED FOR ANY PURPOSE WITHOUT THE ARCHITECTS WRITTEN CONSENT. AS INSTRUMENTS OF SERVICE, THESE DOCUMENTS ARE NOT FINAL AND READY FOR USE, AND THEREFORE NOT VALID, UNLESS THEY ARE SEALED, SIGNED AND DATED.

Copyright, Ltd 2023

Consultant

PK Electrical, Inc.
Engineering Design Consulting
681 Sierra Rose Drive, Suite B | Reno, NV 89511 | 775.826.9010
4601 DTC Boulevard, Suite 740 | Denver, CO 80237 | 720.481.3290
pkelectrical.com

PLEASE RECYCLE

Project

CITY OF FERNLEY CRRC

Job No: 21-058.00

Owner

CITY OF FERNLEY

50% CONSTRUCTION DOCUMENTS

REVISIONS		
REV	DATE	DESCRIPTION

Sheet Title

LEGENDS, FA ONELINE DIAGRAM & DRAWING SCHEDULE

Date: MARCH 21, 2023

Sheet No:

E0.01

LIGHTING CONTROL SEQUENCE OF OPERATION

GENERAL
- THE LIGHTING CONTROL SYSTEM IS A NETWORKED DISTRIBUTED RELAY SYSTEM WITH ROOM CONTROLLERS CONNECTED TO THE BUILDING LCP

OFFICE/ADMIN (STANDALONE CONTROL)
- DIMMING WALL SWITCH SHALL CONTROL LOCAL LIGHTING IN OFFICE SPACES, WITH RAISE-LOWER-OFF FUNCTIONALITY.
- OCCUPANCY SENSOR(S) SHALL CONTROL ALL LIGHTS
  - 10-MINUTE INACTIVITY TIME-OUT
  - MANUAL ON-AUTOMATIC OFF
  - MAY BE COMBINATION WALL SENSOR-DIMMER
- DAYLIGHT SENSOR(S) IN THE IECC DAYLIGHT ZONE SHALL AUTOMATICALLY DIM LIGHT FIXTURES WITHIN THE DAYLIGHT ZONE
  - TARGET FOOTCANDLE THRESHOLD AT FLOOR: 40FC
  - ALL FIXTURES IN EXTERIOR FACING OFFICES SHALL BE CONSIDERED WITHIN THE IECC DAYLIGHT ZONE.

GYMNASIUM (NETWORKED CONTROL)
- OCCUPANCY SENSOR(S) SHALL CONTROL ALL LIGHTS
  - 20-MINUTE INACTIVITY TIME-OUT
  - AUTO ON TO 50%
- DAYLIGHT SENSOR(S) IN THE IECC DAYLIGHT ZONE SHALL AUTOMATICALLY DIM LIGHT FIXTURES WITHIN THE DAYLIGHT ZONE
- KEY OPERATED SWITCHPAD SHALL OPERATE FIXTURES. PROVIDE WITH ON/OFF/RAISE/LOWER, WHEN IN MANUAL OPERATION MODE - OVERRIDE AUTOMATIC CONTROL (DAYLIGHT/OCCUPANCY SENSORS).
- 'OFF' SWITCH SHALL REDUCE LIGHTING LEVEL TO MINIMUM OF .2 FC WHEN OCCUPIED. WHEN UN-OCCUPIED, ALL FIXTURES SHALL TURN OFF. FIRE ALARM SYSTEM ACTIVATION SHALL FORCE ALL LIGHTS 'ON' TO FULL BRIGHT IN SPACE. COMPLY WITH IBC 1008.2.1
- PROVIDE ENGRAVED PLACARD AFFIXED TO WALL ADJACENT TO EACH SWITCH LOCATION IN SPACE INDICATING OPERATION AND FUNCTION. PROVIDE SAMPLE FOR REVIEW
- EMERGENCY LIGHTING VIA INVERTER CONNECTED LIGHTS – WHEN NORMAL POWER IS LOST THE FIXTURES SHALL BYPASS ALL CONTROL AND TURN ON FULL BRIGHT

EVENTS CENTER/TEEN CENTER/GROUP ROOMS
- OCCUPANCY SENSOR(S) SHALL CONTROL ALL LIGHTS
  - 20-MINUTE INACTIVITY TIME-OUT
- DAYLIGHT SENSOR(S) IN THE IECC DAYLIGHT ZONE SHALL AUTOMATICALLY DIM LIGHT FIXTURES WITHIN THE DAYLIGHT ZONE
- KEY OPERATED SWITCHPAD SHALL OPERATE FIXTURES. PROVIDE WITH ON/OFF/RAISE/LOWER, WHEN IN MANUAL OPERATION MODE - OVERRIDE AUTOMATIC CONTROL (DAYLIGHT/OCCUPANCY SENSORS).
- 'OFF' SWITCH SHALL REDUCE LIGHTING LEVEL TO MINIMUM OF .2 FC WHEN OCCUPIED. WHEN UN-OCCUPIED, ALL FIXTURES SHALL TURN OFF. FIRE ALARM SYSTEM ACTIVATION SHALL FORCE ALL LIGHTS 'ON' TO FULL BRIGHT IN SPACE. COMPLY WITH IBC 1008.2.1
- PROVIDE ENGRAVED PLACARD AFFIXED TO WALL ADJACENT TO EACH SWITCH LOCATION IN SPACE INDICATING OPERATION AND FUNCTION. PROVIDE SAMPLE FOR REVIEW
- EMERGENCY LIGHTING VIA INVERTER CONNECTED LIGHTS – WHEN NORMAL POWER IS LOST THE FIXTURES SHALL BYPASS ALL CONTROL AND TURN ON FULL BRIGHT

CORRIDORS/ENTRY (NETWORKED CONTROL)
- OCCUPANCY SENSOR(S) SHALL CONTROL ALL LIGHTS
  - 20-MINUTE INACTIVITY SHALL DIM LIGHTS TO 50%
  - OUTSIDE OF OPERATING HOURS: OFF AFTER 10-MINUTE SENSOR TIMEOUT
  - AUTOMATIC ON-AUTOMATIC OFF
- FIRE ALARM SYSTEM ACTIVATION SHALL FORCE ALL LIGHTS 'ON' TO FULL BRIGHT IN SPACE.
- LIGHTS CIRCUITED TO AN INVERTER SHALL PROVIDE FULL LIGHT OUTPUT IN EMERGENCY OPERATION AND RELEASE ALL OTHER CONTROL

KITCHEN
- MANUAL ON/OFF/RAISE/LOWER CONTROL

RESTROOMS-SINGLE OCCUPANT
- OCCUPANCY SENSOR(S) SHALL CONTROL ALL FIXTURES
  - FIXTURES SHALL BE MANUAL ON-AUTOMATIC OFF
  - SENSORS SHALL HAVE A 10 MINUTE TIMEOUT
  - LOCAL SWITCH FOR ON-OFF CONTROL

RESTROOMS-MULTIPLE STALL/LOCKER ROOMS (NETWORKED CONTROL)
- OCCUPANCY SENSOR(S) SHALL CONTROL ALL FIXTURES
  - 10-MINUTE INACTIVITY SHALL DIM LIGHTS TO 50%
  - OUTSIDE OF OPERATING HOURS: OFF AFTER 10-MINUTE SENSOR TIMEOUT
  - AUTOMATIC ON-AUTOMATIC OFF
  - TIME CLOCK CONTROLLED VIA LCP

STORAGE ROOMS, SUPPORT AREAS (STANDALONE CONTROL)
- OCCUPANCY SENSOR(S) SHALL CONTROL ALL FIXTURES
  - FIXTURES SHALL BE AUTOMATIC ON-AUTOMATIC OFF
  - 10-MINUTE INACTIVITY TIMEOUT
  - LOCAL SWITCH FOR ON-OFF CONTROL

ELECTRICAL/TELECOMM/MECHANICAL ROOMS (STANDALONE CONTROL)
- MANUAL ON/OFF CONTROL

EXTERIOR - BUILDING MOUNTED (NETWORKED CONTROL)
- 365/7 DAY PROGRAMMABLE ASTRONOMICAL TIME CLOCK AND SINGLE PHOTOCELL (VIA LCP)
  - MOTION SENSOR SHALL DIM FIXTURES TO 30% OUTPUT IN PERIODS OF NO MOTION DETECTED; FIXTURES SHALL GO TO FULL OUTPUT WHEN OCCUPANCY IS DETECTED. 10-MINUTE INACTIVITY TIMEOUT.
  - FIXTURES SHALL AUTOMATICALLY TURN ON/OFF AT DUSK/DAWN
    - THE OWNER SHALL HAVE THE OPTION TO TURN OFF ALL LIGHTING AT PRE-PROGRAMMED TIMES
  - POWER CIRCUIT SHALL BE FED VIA LIGHTING INVERTER AND TURN ON ALL EXTERIOR BUILDING MOUNTED FIXTURES IN EMERGENCY MODE (BUILDING POWER LOSS) AND BYPASS ALL CONTROL

EXTERIOR - PARKING LOT (NETWORKED CONTROL)
- MOTION SENSORS SHALL CONTROL ALL FIXTURES INTEGRAL TO FIXTURE
  - DUSK TO DAWN OPERATION VIA INTEGRAL PHOTOCELL
  - FIXTURES SHALL DIM TO 30% IN PERIODS OF NO MOTION DETECTED; FIXTURE SHALL GO TO FULL OUTPUT WHEN OCCUPANCY IS DETECTED.
  - 10-MINUTE INACTIVITY TIMEOUT WITH 5-MINUTE RAMP DOWN BACK TO 10% OUTPUT.
  - PROVIDE PROGRAMMABLE CONTROLLER FOR OWNER TO ADJUST TIMING AND OUTPUTS REMOTELY

LIGHTING FIXTURE SCHEDULE

LIGHTING FIXTURE CATALOG NUMBERS ARE SERIES TYPE ONLY. PROVIDE TRIMS, BALLASTS, MOUNTING EQUIPMENT, FITTINGS AND LAMPS AS REQUIRED BY THE SPECIFICATIONS AND PROJECT CONDITIONS FOR A COMPLETE INSTALLATION.THIS IS NOT A STANDALONE SCHEDULE AND FIXTURES MUST INCORPORATE ALL WORK INDICATED OR IMPLIED THROUGHOUT THE DRAWINGS AND SPECIFICATIONS.

LIGHTING SYSTEM FOOTCANDLE LEVELS ARE BASED ON THE UTILIZATION OF STANDARD REFLECTANCES OF 80-50-20 (CEILING-WALL-FLOOR) PER I.E.S. (ILLUMINATED ENGINEERING SOCIETY). THE ROOM SURFACES ARE USED AS AN INTEGRAL COMPONENT OF THE LIGHTING SYSTEMS. THE REFLECTANCE OF THE SURFACE PAINT COLOR, MATERIAL, AND OTHER ROOM SURFACES DIRECTLY AFFECTS THE DELIVERY OF LIGHT TO THE WORK PLANE, A SIGNIFICANT DROP IN OVERALL LIGHTING LEVELS WILL OCCUR IF REFLECTANCES ARE LOWERED. THE ARCHITECT/OWNER SHALL NOTIFY THE ENGINEER IMMEDIATELY IF FINISHES DO NOT FALL INLINE WITH THE REFLECTANCES MENTIONED ABOVE.

SUBSTITUTION: DEFINITIONS

OR EQUAL = EQUAL OR SUPERIOR TO SPECIFIED IN ALL RESPECTS WILL BE ALLOWED. ENGINEER'S PRE-BID APPROVAL IS NOT REQUIRED. PROPOSED EQUAL FIXTURES ARE SUBJECT TO REVIEW DURING THE STANDARD SUBMITTAL PROCESS.

NO EQUAL = PROVIDE SPECIFIED FIXTURE. SUBSTITUTIONS ARE NOT ALLOWED.

SUBJECT TO REVIEW = EQUAL OR SUPERIOR TO SPECIFIED IN ALL RESPECTS MAY BE ALLOWED ONLY WITH ENGINEER'S APPROVAL. ALL SUBSTITUTIONS MUST BE SUBMITTED AS REQUIRED BY SPECIFICATIONS AND ACCOMPANIED WITH POINT BY POINT LIGHTING CALCULATIONS. DETERMINATION OF EQUAL IS ENGINEER'S SOLE DISCRETION.

L1	1 VA	LED, 2X4 RECESSED TROFFER WITH DIFFUSE MATTE ACRYLIC CENTER. SOURCE: LED, #### LUMENS, 4000K, 80 CRI VOLTAGE: 277 V MANUFACTURER: HE WILLIAMS AT3-2-2-LXX/840-D-XX SUBSTITUTIONS: ○ OR EQUAL ◉ SUBJECT TO REVIEW ○ NO EQUAL	L11	48 VA	LED, 9' DIAMETER PENDANT CYLINDER, MEDIOUM BEAM, CLEAR ALZAK REFLECTOR, FINISH TBD, 0-10V DIMMING, FIELD ADJUSTABLE FLEXIBLE CABLE SOURCE: LED, 5000 LUMENS, 4000K, 80 CRI VOLTAGE: 277 V MANUFACTURER: CONTECH CY92 5000LM 4000K 80 CRI MEDIUM BEAM CLEAR ALZAK MEDIUM FINISH TBD SUBSTITUTIONS: ○ OR EQUAL ◉ SUBJECT TO REVIEW ○ NO EQUAL
L2	20 VA	LED, 1X4 RECESSED TROFFER WITH FROSTED ACRYLIC LENS SOURCE: LED, #### LUMENS, 4000K, 80CRI VOLTAGE: 277 V MANUFACTURER: HE WILLIAMS 50G-S-1-4-L27/840-XX SUBSTITUTIONS: ○ OR EQUAL ◉ SUBJECT TO REVIEW ○ NO EQUAL	L12	12 VA	SUSPENDED LINEAR 4', DIRECT-INDIRECT, WIDE SPREAD OPTICS WITH TOP GLOW, FLAT END CAPS, DUAL CIRCUIT, 0-10V DIMMING TO 10%,ADJUSTABLE CABLE MOUNT. SOURCE: LED, 1362 LUMENS PER FOOT, 4000K, 80 CRI VOLTAGE: 277 V MANUFACTURER: FINELITE HP 4 P ID LENGTH PER PLANS H B 840 WSOTG F 96LG 277 DC FC-10% FA50 SUBSTITUTIONS: ○ OR EQUAL ◉ SUBJECT TO REVIEW ○ NO EQUAL
L3	34 VA	LED, 2X2 RECESSED TROFFER, FROSTED ACRYIC LENS #12 PATTERN, DUAL GASKET LENS, DIM TO 10%. SOURCE: LED, 4300 LUMENS, 4000K, 80CRI VOLTAGE: 277 V MANUFACTURER: HE WILLIAMS 50 G F 2 2 L43 8 40 AF12125 DG DIM UNV SUBSTITUTIONS: ○ OR EQUAL ◉ SUBJECT TO REVIEW ○ NO EQUAL	L13	1 VA	LED, RECESSED 4" DIRECT LINEAR, BOOSTED OUTPUT, BOTTOM GLOW LENS. SOURCE: LED, ### LUMENS/LF, 4000K, ##CRI VOLTAGE: 277 V MANUFACTURER: FINELITE HP4 P D B 840 F BG SUBSTITUTIONS: ○ OR EQUAL ◉ SUBJECT TO REVIEW ○ NO EQUAL
L4	23 VA	LED, SURFACE MOUNT WRAP WITH FROSTED RIBBED ACRYLIC LENS SOURCE: LED, #### LUMENS, 4000K, 80CRI VOLTAGE: 277 V MANUFACTURER: HE WILLIAMS 39-4-LXX/840-A-XX SUBSTITUTIONS: ○ OR EQUAL ◉ SUBJECT TO REVIEW ○ NO EQUAL	L14	17 VA	8" LED WALL SCONCE, REMOTE DIMMING DRIVER, TAPERED FRON WITH ROUND EDGES, MATTE WHITE FINISH SOURCE: LED, 858 LUMENS, 4000K, 80CRI VOLTAGE: 277 V MANUFACTURER: ELLIPTIPAR S414-L028-J-22-M-00-0-840-EL SUBSTITUTIONS: ○ OR EQUAL ◉ SUBJECT TO REVIEW ○ NO EQUAL
L5	36 VA	LED, 4' ROUND LENS STRIP FIXTURE WITH DIFFUSE ACRYLIC LENS SOURCE: LED, #### LUMENS, 4000K, 80CRI VOLTAGE: 277 V MANUFACTURER: HE WILLIAMS 76R-4-LXX/840-XX SUBSTITUTIONS: ○ OR EQUAL ◉ SUBJECT TO REVIEW ○ NO EQUAL	S1	0 VA	LED, 8" SQUARE SITE BOLLARD. SOURCE: LED, #### LUMENS, 4000K, ##CRI VOLTAGE: 277 V MANUFACTURER: HE WILLIAMS OSA8S-L10 SUBSTITUTIONS: ○ OR EQUAL ◉ SUBJECT TO REVIEW ○ NO EQUAL
L6	12 VA	LED, 4.5 IN. RECESSED DOWNLIGHT SOURCE: LED, #### LUMENS, 4000K, ##CRI VOLTAGE: 277 V MANUFACTURER: HE WILLIAMS 4DS-L15-8-40-DIM1-UNV-R-W-OF SUBSTITUTIONS: ○ OR EQUAL ◉ SUBJECT TO REVIEW ○ NO EQUAL	S3	1 VA	LED, AREA LUMINAIRE SINGLE HEAD. 12'6" SQ STEEL POLE WITH VIBRATION DAMPENERS. SOURCE: LED, XXXX LUMENS, 4000K, XXCRI VOLTAGE: 277 V MANUFACTURER: LITHONIA RSX1 LED P2 40K R5 SUBSTITUTIONS: ○ OR EQUAL ◉ SUBJECT TO REVIEW ○ NO EQUAL
L7	11 VA	LED, 6 IN. RECESSED DOWNLIGHT SOURCE: LED, #### LUMENS, 4000K, ##CRI VOLTAGE: 277 V MANUFACTURER: HE WILLIAMS 6DS-LXX-8-40-DIM1-R-W-OF SUBSTITUTIONS: ○ OR EQUAL ◉ SUBJECT TO REVIEW ○ NO EQUAL	S3	1 VA	LED, AREA LUMINAIRE SINGLE HEAD. 12'6" SQ STEEL POLE WITH VIBRATION DAMPENERS. SOURCE: LED, XXXX LUMENS, 4000K, XXCRI VOLTAGE: 277 V MANUFACTURER: LITHONIA RSX1 LED P2 40K R5 SUBSTITUTIONS: ○ OR EQUAL ◉ SUBJECT TO REVIEW ○ NO EQUAL
L8	22 VA	LED, WALL VANITY, SQUARE STEEL FRAME WITH EXTRUDED ALUMINUM HEATSINK MOUNTED TO SQUARE WALL PLATE, CYLINDRICAL OPAL GLASS DIFFUSER, OUTWARD EMITTING LIGHT, BLACK FINISH, WITH ELV DIMMING DRIVER (DOWN TO 10%). SOURCE: LED, 1180 LUMENS, 4000K (CUSTOM), 90CRI VOLTAGE: 120 V MANUFACTURER: KUZCO WS83421 SUBSTITUTIONS: ○ OR EQUAL ◉ SUBJECT TO REVIEW ○ NO EQUAL	S4	1 VA	LED, AREA LUMINAIRE SINGLE HEAD. 12'6" SQ STEEL POLE WITH VIBRATION DAMPENERS. SOURCE: LED, XXXX LUMENS, 4000K, XXCRI VOLTAGE: 277 V MANUFACTURER: LITHONIA RSX1 LED P2 R3 SUBSTITUTIONS: ○ OR EQUAL ◉ SUBJECT TO REVIEW ○ NO EQUAL
L9	29 VA	SUSPENDED LINEAR DIRECT-INDIRECT. WIDE SPREAD OPTIC DISTRIBUTION. SOURCE: LED, #### LUMENS, 4000K, 80CRI VOLTAGE: 277 V MANUFACTURER: FINELITE HP 4 P ID XX S S 840 WSOTG BG 277V FC-1% SUBSTITUTIONS: ○ OR EQUAL ◉ SUBJECT TO REVIEW ○ NO EQUAL	S5	1 VA	LED, 4" DOWNLIGHT, WET LOCATION LISTED, FLUSH LENS. SOURCE: LED, 750 LUMENS, 4000K, ##CRI VOLTAGE: 277 V MANUFACTURER: LEDRA NULITE NU4-QD-SW-07LM-HE80 SUBSTITUTIONS: ○ OR EQUAL ◉ SUBJECT TO REVIEW ○ NO EQUAL
L10	232 VA	LED HIGH-BAY, RECTILINEAR FORM FACTOR, WIDE DISTRIBUTION, CLEAR POLYCARBONATE LENS BRITE DIPPED ANODIZED, 0-10V DIMMING TO 1%, PENDANT AIRCRAFT CABLE 2-POINT MTG, WITH INTEGRAL DAYLIGHT AND OCCUPANCY CONTROLS. SOURCE: LED, 35,214 LUMENS, 5000K, 80 CRI VOLTAGE: 277 V MANUFACTURER: LUX DYNAMICS LUX IK10P L 3D A HO3 850 2' U1 CP2 5/10 BOT INC STND H10-20Y-GYM SUBSTITUTIONS: ○ OR EQUAL ◉ SUBJECT TO REVIEW ○ NO EQUAL	S6	0 VA	LED, WALLPACK, WITH SYMMETRIC WALL WASH UPLIGHT AND AYSMMETRIC DOWNLIGHT, DIE-CAST ALUMINUM HOUSING, SAFETY GLASS LENSS, PURE ANODIZED ALUMINUM REFLECTORS, SILVER MATTE TEXTURED POWER COAT FINISH. SOURCE: VOLTAGE: 277 V MANUFACTURER: BEGA 33 387 SUBSTITUTIONS: ○ OR EQUAL ◉ SUBJECT TO REVIEW ○ NO EQUAL

tsk
225 South Arlington Avenue
Reno NV, 89501
phone: 775.857.2949
fax: 775.857.2403
www.tska.com

THESE DRAWINGS AND SPECIFICATIONS ARE THE PROPERTY OF TATE SNYDER KIMSEY ARCHITECTS AND MAY NOT BE REPRODUCED OR USED FOR ANY PURPOSE WITHOUT THE ARCHITECTS WRITTEN CONSENT. AS INSTRUMENTS OF SERVICE, THESE DOCUMENTS ARE NOT FINAL AND READY FOR USE, AND THEREFORE NOT VALID, UNLESS THEY ARE SEALED, SIGNED AND DATED.

Copyright, Ltd 2023

Consultant

PK Electrical, Inc.
Engineering Design Consulting
681 Sierra Rose Drive, Suite B | Reno, NV 89511 | 775.826.9010
4601 DTC Boulevard, Suite 740 | Denver, CO 80237 | 720.481.3290
pkelectrical.com

PLEASE RECYCLE

Project
CITY OF FERNLEY CRRC

Job No: 21-058.00

Owner
CITY OF FERNLEY

50% CONSTRUCTION DOCUMENTS

REVISIONS		
REV	DATE	DESCRIPTION

Sheet Title
FIXTURE SCHEDULE AND IECC CALCULATIONS

Date: MARCH 21, 2023

Sheet No:
E0.02

Load Calculation: Distribution Board DB

Description	Lighting	Receptacle	Equipment	Motor	Kitchen	Heating	Remarks
T1	100	69664	27857	45717 VA	21924	4500	
H1				176637 VA			
H2				61503 VA			
H3				64500 VA			
INV	4400						
Total Connected Loads:	100 VA	69664 VA	25257 VA	348357 VA	21924 VA	4500 VA	469802 VA

Load Classification		NEC Reference	Connected Load	Demand Factor	Est. Demand	Load Totals
L	Lighting	NEC 220.42	100 VA	100.00%	100 VA	**Total Connected Load:** 469802 VA
R	Receptacle	NEC 220.44	69664 VA	57.18%	39832 VA	**Total Demand Load:** 446597 VA
E	Equipment		25257 VA	100.00%	25257 VA	
M	Motor	NEC 430.24	348357 VA	104.10%	362657 VA	**480/277 Wye System Current**
K	Kitchen	NEC 220.56	21924 VA	65.00%	14251 VA	**Connected Amps:** 565 A
H	Heating	NEC 220.51	4500 VA	100.00%	4500 VA	**Demand Amps:** 537 A

Notes:

Load Calculation: Distribution Board DPL

Description	Lighting	Receptacle	Equipment	Motor	Kitchen	Heating	Remarks
L1		7920	5140	14284 VA		4500	
L2		7200	50				
L3		12240	1680	198 VA			
L4		28744	2480	4992 VA			
L5		7860	495	5950 VA			
K1	100	900	7868	20293 VA	21924		
K2		4800	10144				
Total Connected Loads:	100 VA	69664 VA	25257 VA	45717 VA	21924 VA	4500 VA	167162 VA

Load Classification		NEC Reference	Connected Load	Demand Factor	Est. Demand	Load Totals
L	Lighting	NEC 220.42	100 VA	100.00%	100 VA	**Total Connected Load:** 167162 VA
R	Receptacle	NEC 220.44	69664 VA	57.18%	39832 VA	**Total Demand Load:** 132728 VA
E	Equipment		25257 VA	100.00%	25257 VA	
M	Motor	NEC 430.24	45717 VA	106.72%	48788 VA	**120/208 Wye System Current**
K	Kitchen	NEC 220.56	21924 VA	65.00%	14251 VA	**Connected Amps:** 464 A
H	Heating	NEC 220.51	4500 VA	100.00%	4500 VA	**Demand Amps:** 368 A

Notes:

FEEDER SCHEDULE (600V, 3□, 3W)

FEEDER	AMPERE	WIRE (CU)	BOND (CU)	CONDUIT
153	15	(3) 12	12	3/4"
203	20	(3) 12	12	3/4"
303	30	(3) 10	10	3/4"
403	40	(3) 8	10	3/4"
503	50	(3) 6	10	1"
603	60	(3) 4	10	1"
703	70	(3) 4	8	1 1/4"
803	80	(3) 3	8	1 1/4"
1003	100	(3) 2	8	1 1/4"
1253	125	(3) 1/0	6	1 1/2"
1503	150	(3) 1/0	6	1 1/2"
1753	175	(3) 2/0	6	2"
2003	200	(3) 3/0	6	2"
2253	225	(3) 4/0	4	2 1/2"
2503	250	(3) 250K	4	2 1/2"
3003	300	(3) 350K	3	3"
3503	350	(3) 400K	3	3"
4003	400	(3) 500K	3	4"
5003	500	(6) 250K	(2) 2	(2) 2 1/2"
6003	600	(6) 350K	(2) 1	(2) 3"
8003	800	(6) 500K	(2) 1/0	(2) 4"
10003	1000	(9) 400K	(3) 2/0	(3) 3"
12003	1200	(9) 600K	(3) 3/0	(3) 4"
16003	1600	(12) 600K	(4) 4/0	(4) 4"
20003	2000	(15) 600K	(5) 250K	(5) 4"

FEEDER SCHEDULE (600V, 3□, 4W)

FEEDER	AMPERE	WIRE (CU)	BOND (CU)	CONDUIT
154	15	(4) 12	12	3/4"
204	20	(4) 12	12	3/4"
304	30	(4) 10	10	3/4"
404	40	(4) 8	10	1"
504	50	(4) 6	10	1"
604	60	(4) 4	10	1 1/4"
704	70	(4) 4	8	1 1/4"
804	80	(4) 3	8	1 1/4"
1004	100	(4) 1	8	1 1/2"
1254	125	(4) 1/0	6	2"
1504	150	(4) 1/0	6	2"
1754	175	(4) 2/0	6	2"
2004	200	(4) 3/0	6	2"
2254	225	(4) 4/0	4	2 1/2"
2504	250	(4) 250K	4	3"
3004	300	(4) 350K	3	3"
3504	350	(4) 400K	3	3"
4004	400	(4) 500K	3	4"
5004	500	(8) 250K	(2) 2	(2) 2 1/2"
6004	600	(8) 350K	(2) 1	(2) 3"
8004	800	(8) 500K	(2) 1/0	(2) 4"
8004T	800	(8) 600K	(2) 1/0	(2) 4"
10004	1000	(12) 400K	(3) 2/0	(3) 3 1/2"
12004	1200	(12) 600K	(3) 3/0	(3) 4"
16004	1600	(16) 600K	(4) 4/0	(4) 4"

GENERAL NOTES

1. PANELBOARD AND BREAKER INTERRUPTING CAPACITIES (AIC) SHALL BE FULLY RATED AS AN ASSEMBLY. SERIES RATING OF BREAKER DEVICES AND EQUIPMENT IS NOT PERMITTED.ALL CONDUCTOR SIZES ARE BASED ON COPPER. ALUMINUM IS NOT PERMITTED.
2. INSTALL NVE TRANSFORMER PAD, CONDUIT, ETC. PER UTILITY REQUIREMENTS. SEE NVE DRAWINGS FOR ALL WORK REQUIRED. CONTRACTOR SHALL BE RESPONSIBLE FOR ALL WORK, INCLUDING THAT REQUIRED BY NVE IN BID. COORDINATE WITH NVE.
3. ALL SWITCHBOARDS AND DISTRIBUTION BOARDS SHALL BE FULLY BUSSED.
4. ALL CONTRACTOR PROVIDED EQUIPMENT SHALL COMPLY WITH NV ENERGY SPECIFICATIONS AND REQUIREMENTS.
5. DO NOT SPLICE FEEDER CONDUCTORS UNLESS PRIOR APPROVAL HAS BEEN OBTAINED FROM THE ENGINEER.
6. ALL SWITCHBOARDS, DISTRIBUTION BOARDS, AND PANEL BOARDS SHALL HAVE REMAINDER OF SECTION BUSSED SPACE (TO PROVIDE MINIMUM OF 10% SPARE CAPACITY).
7. CONTRACTOR SHALL PREPARE THE SHORT CIRCUIT AND COORDINATION STUDY PRIOR TO ORDERING DISTRIBUTION EQUIPMENT TO VERIFY ALL EQUIPMENT RATINGS, BREAKER TYPES, AND SETTINGS REQUIRED. ANY CHANGES TO EQUIPMENT RATINGS OR BREAKER TYPES IN ORDER TO PROVIDE A CODE REQUIRED SELECTIVELY COORDINATED SYSTEM SHALL NOT RESULT IN ADDITIONAL COST TO THE OWNER.
8. PROVIDE ENGRAVED NAMEPLATES (SCREW ATTACHED) ON ALL PANELS, TRANSFORMERS, SWITCHBOARDS, DISTRIBUTION BOARDS. DISCONNECT SWITCHES, SIMILAR TO THE FOLLOWING. MINIMUM SIZE 1 1/2"x3".

208/120V 3PH 4W
PANEL L1A
FED FROM DIST PNL DP-1

SHEET NOTES

1. NV ENERGY TRANSFORMER PAD, PROVIDE AND INSTALL AS REQUIRED. COORDINATE ALL UTILITY WORK WITH NV ENERGY.
2. INTERNALLY MOUNTED SPD WITH DISCONNECT. 240KA/PHASE WITH STATUS INDICATOR LIGHT ON EACH PHASE, AUDIBLE ALARM, TRANSIENT COUNTER AND PUSH TO TEST. SEE SPECIFICATIONS.
3. REMAINDER OF SPACE SHALL BE FULLY BUSSED. PROVIDE SPACE FOR (2) 225A/3P BREAKERS, MINIMUM.
4. MANUAL TRANSFER SWITCH, 1000A, 480V, 3-POLE, NEMA 3R RATED, PAD MOUNTED.

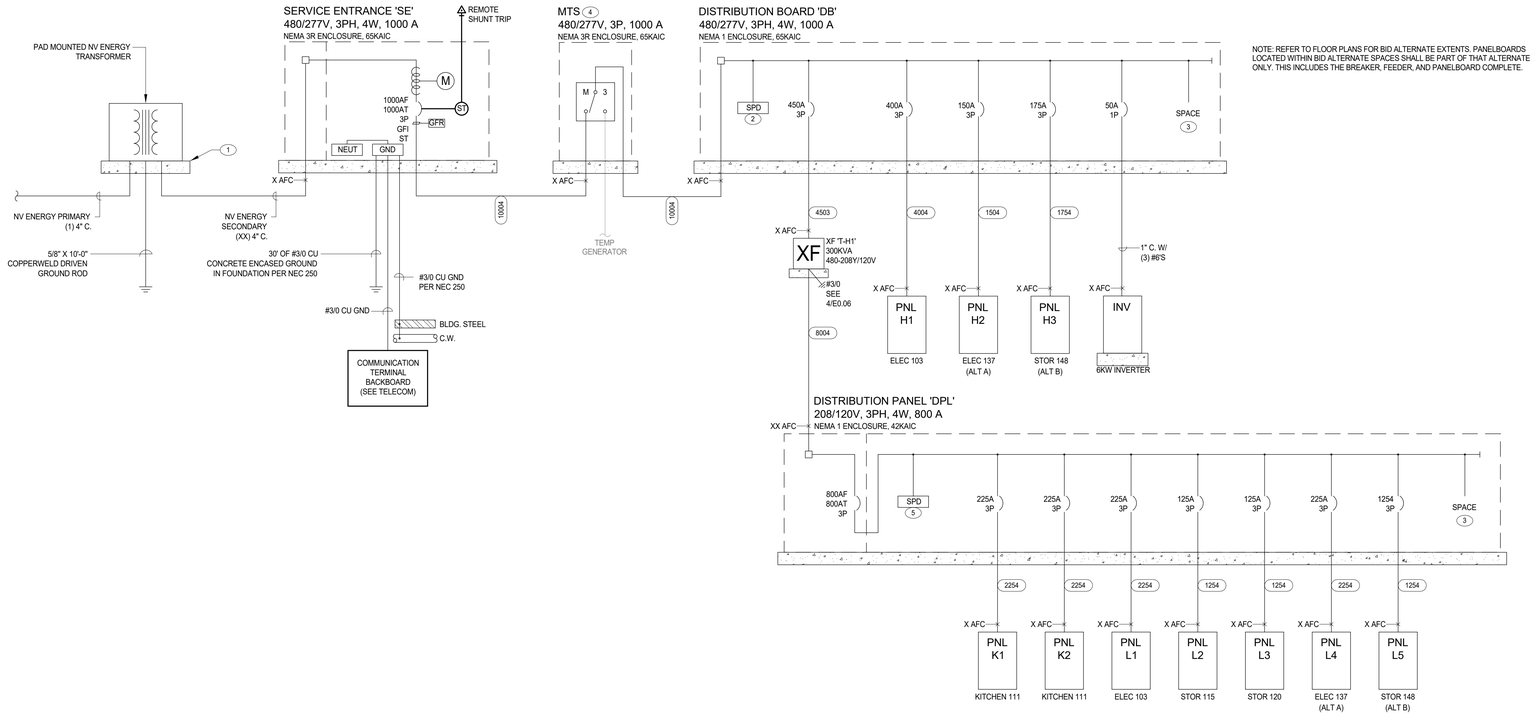

1 E0.03 ONELINE DIAGRAM
Not To Scale

tsk
225 South Arlington Avenue
Reno NV, 89501
phone: 775.857.2949
fax: 775.857.2403
www.tska.com

THESE DRAWINGS AND SPECIFICATIONS ARE THE PROPERTY OF TATE SNYDER KIMSEY ARCHITECTS AND MAY NOT BE REPRODUCED OR USED FOR ANY PURPOSE WITHOUT THE ARCHITECTS WRITTEN CONSENT. AS INSTRUMENTS OF SERVICE, THESE DOCUMENTS ARE NOT FINAL AND READY FOR USE, AND THEREFORE NOT VALID, UNLESS THEY ARE SEALED, SIGNED AND DATED.
Copyright, Ltd 2023

Consultant

PK Electrical, Inc.
Engineering Design Consulting
681 Sierra Rose Drive, Suite B | Reno, NV 89511 | 775.826.9010
4601 DTC Boulevard, Suite 740 | Denver, CO 80237 | 720.481.3290
pkelectrical.com

PLEASE RECYCLE

Project
CITY OF FERNLEY CRRC

Job No: 21-058.00

Owner
CITY OF FERNLEY

50% CONSTRUCTION DOCUMENTS

REVISIONS		
REV	DATE	DESCRIPTION

Sheet Title
ONELINE DIAGRAM AND LOAD CALCULATIONS

Date: MARCH 21, 2023

Sheet No:
E0.03

Panel: H1 — Location: ELEC 103

Type	Description	Trip	Poles	#	A	B	C	#	Poles	Trip	Description	Type
				1	11592	4150		2				
M	RTU 1	50	3	3		11592	4150	4	3	20	RTU 6	M
				5			11592	4150	6			
M	RTU 2	80	3	7	19067	4150		8				
				9		19067	4150	10	3	20	RTU 10	M
				11			19067	4150	12			
				13	3320	3320		14				
M	RTU 7	20	3	15			3320	3320	16	3	20	RTU 8	M
				17				3320	3320	18			
				19	3320	0		20	1	20	SPARE	--
M	RTU 9	20	3	21			3320	0	22	1	20	SPARE	--
				23				3320	0	24	1	20	SPARE	--
				25	3320	0				26	1	20	SPARE	--
M	RTU 3	20	3	27			3320	0		28	1	20	SPARE	--
				29				3320	0	30	1	20	SPARE	--
				31	3320	--				32	1	--	SPACE	--
M	RTU 4	20	3	33			3320	--		34	1	--	SPACE	--
				35					3320	--	36	1	--	SPACE	--
				37	3320	--					38	1	--	SPACE	--
M	RTU 6	20	3	39			3320	--			40	1	--	SPACE	--
				41					3320	--	42	1	--	SPACE	--
					Total Load:		58879 VA	58879 VA	58879 VA						
					Total Amps:		213 A	213 A	213 A						

Load Classification		NEC Reference	Connected Load	Demand Factor	Est. Demand
L	Lighting	NEC 220.42			
R	Receptacle	NEC 220.44			
E	Equipment				
M	Motor	NEC 430.24	176637 VA	108.10%	190937 VA
K	Kitchen	NEC 220.56			
H	Heating	NEC 220.51			

Load Totals
Total Connected Load: 176637 VA
Total Demand Load: 190937 VA
480/277 Wye System Current
Connected Amps: 212 A
Demand Amps: **230 A**

Copper Bus Size	400	**Ground**	Standard	**Notes:**
Voltage	480/277 Wye	**Mounting**	Surface	
Phase	3	**Enclosure**	NEMA 1	
Wire	4	**# of 1-Pole Circuits**	42	
Lugs	MLO	**Neutral**	100.00%	
Breaker AIC Rating		**Feeder OCPD Size**		

Panel: H2 — Location:

Type	Description	Trip	Poles	#	A	B	C	#	Poles	Trip	Description	Type
				1	3324			2				
M	RTU-16	20	3	3		3324	3324	4				
				5			3324	3324	6	3	20	RTU-12	M
				7	3324	3324		8				
M	RTU-15	20	3	9		3324	3324	10				
				11			3324	3324	12	3	20	RTU-11	M
				13	3881	3324		14				
M	RTU-14	20	3	15		3881	3324	16				
				17			3881	3324	18	3	20	RTU-13	M
--	SPARE	20	1	19	0	3324		20				
--	SPARE	20	1	21		0	--	22	1	--	SPACE	--
--	SPARE	20	1	23			0	--	24	1	--	SPACE	--
--	SPARE	20	1	25	0	--		26	1	--	SPACE	--
--	SPARE	20	1	27		0	--	28	1	--	SPACE	--
--	SPARE	20	1	29			0	--	30	1	--	SPACE	--
--	SPARE	20	1	31	0	--		32	1	--	SPACE	--
--	SPARE	20	1	33		0	--	34	1	--	SPACE	--
--	SPARE	20	1	35			0	--	36	1	--	SPACE	--
--	SPARE	20	1	37	0	--		38	1	--	SPACE	--
--	SPARE	20	1	39		0	--	40	1	--	SPACE	--
--	SPARE	20	1	41			0	--	42	1	--	SPACE	--
					Total Load:	20501 VA	20501 VA	20501 VA						
					Total Amps:	74 A	74 A	74 A						

Load Classification		NEC Reference	Connected Load	Demand Factor	Est. Demand
L	Lighting	NEC 220.42			
R	Receptacle	NEC 220.44			
E	Equipment				
M	Motor	NEC 430.24	61503 VA	104.73%	64414 VA
K	Kitchen	NEC 220.56			
H	Heating	NEC 220.51			

Load Totals
Total Connected Load: 61503 VA
Total Demand Load: 64414 VA
480/277 Wye System Current
Connected Amps: 74 A
Demand Amps: **77 A**

Copper Bus Size	125	**Ground**	Standard	**Notes:**
Voltage	480/277 Wye	**Mounting**	Surface	
Phase	3	**Enclosure**	NEMA 1	
Wire	4	**# of 1-Pole Circuits**	42	
Lugs	MLO	**Neutral**	100.00%	
Breaker AIC Rating		**Feeder OCPD Size**		

Panel: H3 — Location:

Type	Description	Trip	Poles	#	A	B	C	#	Poles	Trip	Description	Type
				1	3320	9090		2				
M	RTU-17	15	3	3		3320	9090	4	3	50	RTU-18	M
				5			3320	9090	6			
				7	9090	0		8	1	20	SPARE	--
M	RTU-19	50	3	9		9090	0	10	1	20	SPARE	--
				11			9090	0	12	1	20	SPARE	--
--	SPACE	--	1	13	--	0		14	1	20	SPARE	--
--	SPACE	--	1	15		--	0	16	1	20	SPARE	--
--	SPACE	--	1	17			--	0	18	1	20	SPARE	--
--	SPACE	--	1	19	--	0		20	1	20	SPARE	--
--	SPACE	--	1	21		--	0	22	1	20	SPARE	--
--	SPACE	--	1	23			--	0	24	1	20	SPARE	--
					Total Load:	21500 VA	21500 VA	21500 VA						
					Total Amps:	78 A	78 A	78 A						

Load Classification		NEC Reference	Connected Load	Demand Factor	Est. Demand
L	Lighting	NEC 220.42			
R	Receptacle	NEC 220.44			
E	Equipment				
M	Motor	NEC 430.24	64500 VA	110.57%	71318 VA
K	Kitchen	NEC 220.56			
H	Heating	NEC 220.51			

Load Totals
Total Connected Load: 64500 VA
Total Demand Load: 71318 VA
480/277 Wye System Current
Connected Amps: 78 A
Demand Amps: **86 A**

Copper Bus Size	225	**Ground**	Standard	**Notes:**
Voltage	480/277 Wye	**Mounting**	Surface	
Phase	3	**Enclosure**	NEMA 1	
Wire	4	**# of 1-Pole Circuits**	24	
Lugs	MLO	**Neutral**	100.00%	
Breaker AIC Rating		**Feeder OCPD Size**	225	

Panel: K1 — Location: KITCHEN 111

Type	Description	Trip	Poles	#	A	B	C	#	Poles	Trip	Description	Type
				1	4095	960		2	1	15	[1] K46 - DBL CONVC OVEN	K
M	K01 - REFER RACK	50	3	3		4095	960	4	1	15	[1] K46 - DBL CONVC OVEN	K
				5			4095	804	6	1	15	[1] K49 - MOBILE REFER BASE	K
M	K09 - CONDENSER	20	1	7	218	1560		8	2	20	K51 - GAS COMBI OVEN	K
M	K08 - ICE MAKER	20	2	9		1040	1560	10				
				11			1040	900	12	1	20	K55 - PREP TABLE CONV. REC.	R
M	K06 - AIR CURTAIN	20	1	13	1180	1440		14	1	20	K61 - MOB. TABLE CORD REEL	K
M	K06 - AIR CURTAIN	20	1	15		1180	1500	16	2	20	K63 - ROLL-THRU HEATED CAB	K
L; M	K15 - WALK-IN FREEZER	20	1	17			650	1500	18				
L; M	K20 - WALK-IN COOLER	20	1	19	300	1440		20	1	15	K65 - MOB. TABLE CORD REEL	K
M	K16 - EVAP COIL (FREEZER)	20	2	21			208	1608	22	1	20	K66 - MICROWAVE	K
				23			208	1440	24	1	15	K68 - MOB. TABLE CORD REE	K
M	K21 - EVAP COIL (COOLER)	20	1	25	384	1392		26	1	20	K69 - ROLL-THRU REFER	K
E	[1] K30 - DISHWASHER	15	1	27			1440	1920	28	1	20	K71 - MOBILE HEATED...	K
M	K31 - DISPOSER	20	2	29				801	1920	30	1	20	K71 - MOBILE HEATED...	K
				31	801	1920				32	1	20	K71 - MOBILE HEATED...	K
E	[1] K35 - 2-SECTION REFER	15	1	33			1368	0		34	1	20	SPARE	--
E	K37 - MOBILE WARMING...	15	1	35					1500	0	36	1	20	SPARE	--
E	K38 - MOBILE HEATED...	20	1	37	2000	0					38	1	20	SPARE	--
L	K39 - EXHAUST HOOD LIGHTS	20	1	39			100	0			40	1	20	SPARE	--
E	K43 - ANSUL CONTROL PANEL	20	1	41					1560	0	42	1	20	SPARE	--
					Total Load:		17690 VA	16979 VA	16417 VA						
					Total Amps:		148 A	142 A	137 A						

Load Classification		NEC Reference	Connected Load	Demand Factor	Est. Demand
L	Lighting	NEC 220.42	100 VA	100.00%	100 VA
R	Receptacle	NEC 220.44	900 VA	100.00%	900 VA
E	Equipment		7868 VA	100.00%	7868 VA
M	Motor	NEC 430.24	20293 VA	115.13%	23364 VA
K	Kitchen	NEC 220.56	21924 VA	65.00%	14251 VA
H	Heating	NEC 220.51			

Load Totals
Total Connected Load: 51085 VA
Total Demand Load: 46483 VA
120/208 Wye System Current
Connected Amps: 142 A
Demand Amps: **129 A**

Copper Bus Size	225	**Ground**	Standard	**Notes:**
Voltage	120/208 Wye	**Mounting**	Flush	[1] PROVIDE 5mA GFCI BREAKER FOR PERSONNEL PROTECTION.
Phase	3	**Enclosure**	NEMA 1	
Wire	4	**# of 1-Pole Circuits**	42	
Lugs	MLO	**Neutral**	100.00%	
Breaker AIC Rating		**Feeder OCPD Size**	225	

Panel: K2 — Location: KITCHEN 111

Type	Description	Trip	Poles	#	A	B	C	#	Poles	Trip	Description	Type
R	[1] K74 - PREP TABLE CONV....	20	1	1	1620	0		2	1	20	SPARE	--
R	[1] K82 - POS SYSTEM	20	1	3		600	0	4	1	20	SPARE	--
R	[1] K83 - CARD READERS	20	1	5			600	0	6	1	20	SPARE	--
E	[1] K84 - MOBILE MILK COOLER	20	1	7	996	0		8	1	20	SPARE	--
E	[1] K86 - 4-PAN HOT/COLD	20	2	9		1664	0	10	1	20	SPARE	--
				11			1664	0	12	1	20	SPARE	--
E	[1] K88 - SERVING COUNTER	20	1	13	996	0		14	1	20	SPARE	--
E	[1] K88 - SERVING COUNTER	20	1	15		996	0	16	1	20	SPARE	--
E	[1] K91 - 4-PAN HOT/COLD	20	2	17			1664	0	18	1	20	SPARE	--
				19	1664	0		20	1	20	SPARE	--
R	R DRY STORAGE 154	20	1	21		1080	0	22	1	20	SPARE	--
R	R KITCHEN 111	20	1	23			900	0	24	1	20	SPARE	--
E	K-CONTACTOR	20	1	25	500	0		26	1	20	SPARE	--
--	SPACE	--	1	27		--	--	28	1	--	SPACE	--
--	SPACE	--	1	29			--	--	30	1	--	SPACE	--
--	SPACE	--	1	31	--	--		32	1	--	SPACE	--
--	SPACE	--	1	33		--	--	34	1	--	SPACE	--
--	SPACE	--	1	35			--	--	36	1	--	SPACE	--
--	SPACE	--	1	37	--	--		38	1	--	SPACE	--
--	SPACE	--	1	39		--	--	40	1	--	SPACE	--
--	SPACE	--	1	41			--	--	42	1	--	SPACE	--
					Total Load:	5776 VA	4340 VA	4828 VA						
					Total Amps:	49 A	36 A	41 A						

Load Classification		NEC Reference	Connected Load	Demand Factor	Est. Demand
L	Lighting	NEC 220.42			
R	Receptacle	NEC 220.44	4800 VA	100.00%	4800 VA
E	Equipment		9644 VA	100.00%	9644 VA
M	Motor	NEC 430.24			
K	Kitchen	NEC 220.56			
H	Heating	NEC 220.51			

Load Totals
Total Connected Load: 14444 VA
Total Demand Load: 14444 VA
120/208 Wye System Current
Connected Amps: 40 A
Demand Amps: **40 A**

Copper Bus Size	225	**Ground**	Standard	**Notes:**
Voltage	120/208 Wye	**Mounting**	Flush	[1] PROVIDE 5mA GFCI BREAKER FOR PERSONNEL PROTECTION.
Phase	3	**Enclosure**	NEMA 1	
Wire	4	**# of 1-Pole Circuits**	42	
Lugs	MLO	**Neutral**	100.00%	
Breaker AIC Rating		**Feeder OCPD Size**	225	

Panel: L1 — Location: ELEC 103

Type	Description	Trip	Poles	#	A	B	C	#	Poles	Trip	Description	Type
M	EF-1	20	1	1	500	180		2	1	20	R MDF 102	R
R	RTU RECEPTS	20	1	3			900	1080	4	1	20	R MDF 102	R
				5					1267	1080	6	1	20	R MDF 102	R
M	KEF-1	20	3	7	1267	720					8	1	20	R MECH./ELEC 103	R
				9			1267	720			10	1	20	R	R
M	ACO-1	30	2	11					2496	720	12	1	20	R	R
				13	2496	500					14	1	20	LCP	E
R	RTU RECEPTS	20	1	15			540	1600			16	1	20	FACP	E
M	ACO-2	30	2	17					2496	720	18	1	20	R Room 4, 105	R
				19	2496	640					20	1	20	R	R; E
H	EWH-1	20	1	21			1500	0			22	1	20	SPARE	--
H	EWH-2	20	1	23					1500	0	24	1	20	SPARE	--
R	TMV-1	20	1	25	360	0					26	1	20	SPARE	--
E	WH-1	20	1	27			500	0			28	1	20	SPARE	--
E	WH-2	20	1	29					500	0	30	1	20	SPARE	--
E	WH-3	20	1	31	500	0					32	1	20	SPARE	--
H	H	20	1	33			1500	0			34	1	20	SPARE	--
E	E MDF 102	20	1	35					720	0	36	1	20	SPARE	--
E	E MDF 102	20	1	37	720	0					38	1	20	SPARE	--
R	R MDF 102	20	1	39			180	0			40	1	20	SPARE	--
R	R MDF 102	20	1	41					180	0	42	1	20	SPARE	--
					Total Load:		10379 VA	9787 VA	11679 VA						
					Total Amps:		87 A	82 A	98 A						

Load Classification		NEC Reference	Connected Load	Demand Factor	Est. Demand
L	Lighting	NEC 220.42			
R	Receptacle	NEC 220.44	7920 VA	100.00%	7920 VA
E	Equipment		3040 VA	100.00%	3040 VA
M	Motor	NEC 430.24	14284 VA	108.74%	15532 VA
K	Kitchen	NEC 220.56			
H	Heating	NEC 220.51	4500 VA	100.00%	4500 VA

Load Totals
Total Connected Load: 29744 VA
Total Demand Load: 30992 VA
120/208 Wye System Current
Connected Amps: 83 A
Demand Amps: **86 A**

Copper Bus Size	225	**Ground**	Standard	**Notes:**
Voltage	120/208 Wye	**Mounting**	Surface	
Phase	3	**Enclosure**	NEMA 1	
Wire	4	**# of 1-Pole Circuits**	42	
Lugs	MLO	**Neutral**	100.00%	
Breaker AIC Rating		**Feeder OCPD Size**		

Panel: L2 — Location: STORAGE 115

Type	Description	Trip	Poles	#	A	B	C	#	Poles	Trip	Description	Type
R	R OFFICE 114	20	1	1	1080	0		2	1	20	SPARE	--
R	ADMIN 113 RECEPTS	20	1	3		1620	0	4	1	20	SPARE	--
R; E	R Room 116, 107	20	1	5			770	0	6	1	20	SPARE	--
R	EVENTS AV RACK	20	1	7	360	0		8	1	20	SPARE	--
R	EVENTS CENTER RECEPTS	20	1	9		720	0	10	1	20	SPARE	--
R	EVENTS CENTER RECEPTS	20	1	11			720	0	12	1	20	SPARE	--
R	R LOBBY 107	20	1	13	1080	0		14	1	20	SPARE	--
R	R LOBBY 107	20	1	15		900	0	16	1	20	SPARE	--
--	SPARE	20	1	17			0	0	18	1	20	SPARE	--
--	SPARE	20	1	19	0	0		20	1	20	SPARE	--
--	SPARE	20	1	21		0	0	22	1	20	SPARE	--
--	SPARE	20	1	23			0	0	24	1	20	SPARE	--
--	SPARE	20	1	25	0	0		26	1	20	SPARE	--
--	SPARE	20	1	27		0	0	28	1	20	SPARE	--
--	SPARE	20	1	29			0	0	30	1	20	SPARE	--
--	SPARE	20	1	31	0	0		32	1	20	SPARE	--
--	SPARE	20	1	33		0	0	34	1	20	SPARE	--
--	SPARE	20	1	35			0	0	36	1	20	SPARE	--
--	SPARE	20	1	37	0	0		38	1	20	SPARE	--
--	SPARE	20	1	39		0	0	40	1	20	SPARE	--
--	SPARE	20	1	41			0	0	42	1	20	SPARE	--
					Total Load:	2520 VA	3240 VA	1490 VA						
					Total Amps:	22 A	28 A	12 A						

Load Classification		NEC Reference	Connected Load	Demand Factor	Est. Demand
L	Lighting	NEC 220.42			
R	Receptacle	NEC 220.44	7200 VA	100.00%	7200 VA
E	Equipment		50 VA	100.00%	50 VA
M	Motor	NEC 430.24			
K	Kitchen	NEC 220.56			
H	Heating	NEC 220.51			

Load Totals
Total Connected Load: 7250 VA
Total Demand Load: 7250 VA
120/208 Wye System Current
Connected Amps: 20 A
Demand Amps: **20 A**

Copper Bus Size	225	**Ground**	Standard	**Notes:**
Voltage	120/208 Wye	**Mounting**	Surface	
Phase	3	**Enclosure**	NEMA 1	
Wire	4	**# of 1-Pole Circuits**	42	
Lugs	MLO	**Neutral**	100.00%	
Breaker AIC Rating		**Feeder OCPD Size**		

Panel: L3 — Location: Space 2

Type	Description	Trip	Poles	#	A	B	C	#	Poles	Trip	Description	Type
M	EF-3	20	1	1	100	720		2	1	20	R TEEN CENTER 108	R
M	EF-4	20	1	3		98	0	4	1	20	SPARE	--
E	E	20	1	5			180	0	6	1	20	SPARE	--
R	R CLASSROOM 118	20	1	7	720	0		8	1	20	SPARE	--
R	R CLASSROOM 118	20	1	9		900	0	10	1	20	SPARE	--
R	R CLASSROOM 121	20	1	11			720	0	12	1	20	SPARE	--
R	R CLASSROOM 121	20	1	13	720	0		14	1	20	SPARE	--
E	E Room 1, 124, 127	20	1	15		500	0	16	1	20	SPARE	--
E	E Room 119, 122	20	1	17			200	0	18	1	20	SPARE	--
R	R Space 2	20	1	19	1620	0		20	1	20	SPARE	--
R	R CLASSROOM 126	20	1	21		720	0	22	1	20	SPARE	--
R	R CLASSROOM 126	20	1	23			720	0	24	1	20	SPARE	--
R	R	20	1	25	1440	0		26	1	20	SPARE	--
R	R CLASSROOM 123	20	1	27		720	0	28	1	20	SPARE	--
R	R CLASSROOM 123	20	1	29			720	0	30	1	20	SPARE	--
R; E	Room 129, 130	20	1	31	460	0		32	1	20	SPARE	--
R	R TEEN CENTER 108	20	1	33		720	0	34	1	20	SPARE	--
E	E	20	1	35			700	0	36	1	20	SPARE	--
R	R Room 108	20	1	37	720	0		38	1	20	SPARE	--
R	R	20	1	39		360	0	40	1	20	SPARE	--
R	R	20	1	41			360	0	42	1	20	SPARE	--
					Total Load:	6500 VA	4018 VA	3600 VA						
					Total Amps:	55 A	34 A	30 A						

Load Classification		NEC Reference	Connected Load	Demand Factor	Est. Demand
L	Lighting	NEC 220.42			
R	Receptacle	NEC 220.44	12240 VA	90.85%	11120 VA
E	Equipment		1680 VA	100.00%	1680 VA
M	Motor	NEC 430.24	198 VA	112.63%	223 VA
K	Kitchen	NEC 220.56			
H	Heating	NEC 220.51			

Load Totals
Total Connected Load: 14118 VA
Total Demand Load: 13023 VA
120/208 Wye System Current
Connected Amps: 39 A
Demand Amps: **36 A**

Copper Bus Size	225	**Ground**	Standard	**Notes:**
Voltage	120/208 Wye	**Mounting**	Surface	
Phase	3	**Enclosure**	NEMA 1	
Wire	4	**# of 1-Pole Circuits**	42	
Lugs	MLO	**Neutral**	100.00%	
Breaker AIC Rating		**Feeder OCPD Size**	225	

Panel: L4 — Location:

Type	Description	Trip	Poles	#	A	B	C	#	Poles	Trip	Description	Type
M	ACO-3	20	2	1	2496	1440		2	1	20	RECEPTION 132 RECEPTS	R
				3		2496	1260	4	1	20	ROOM 139 RECEPTS	R
R	RTU RECEPTS	20	1	5			1260	900	6	1	20	RR/ENTRY RECEPTS	R
R	DRYER 1	30	2	7	2496	1800					8	1	20	[1] K111 - WORK COUNTER...	R
				9			2496	240			10	1	15	[1] K112 - U/C REFER	E
R	DRYER 2	30	2	11					2496	1440	12	1	15	K115 - U/C DISHWASHER	E
				13	2496	1110					14	1	20	R CONV REC.	R
R	WASHER 1	20	1	15			1800	180			16	1	20	R	R
R	WASHER 2	20	1	17					1800	0	18	1	20	SPARE	--
E	NORTH SIDE VALVES	20	1	19	400	0					20	1	20	SPARE	--
R	LAUNDRY RECEPTS	20	1	21			540	0			22	1	20	SPARE	--
E	SOUTH SIDE VALVES	20	1	23					400	0	24	1	20	SPARE	--
R	ROOM 143 RECEPTS	20	1	25	720	0					26	1	20	SPARE	--
R	ROOM 143 RECEPTS	20	1	27			720	0			28	1	20	SPARE	--
R	ROOM 142 RECEPTS	20	1	29					900	0	30	1	20	SPARE	--
R	ROOM 141 RECEPTS	20	1	31	720	0					32	1	20	SPARE	--
R	EWC-1	20	1	33			370	0			34	1	20	SPARE	--
R	ROOM 145 RECEPTS	20	1	35					720	0	36	1	20	SPARE	--
R	ROOM 145 RECEPTS	20	1	37	540	0					38	1	20	SPARE	--
R	OFFICE 136 RECEPTS	20	1	39			1440	0			40	1	20	SPARE	--
R	ELEC 137 RECEPTS AND IT	20	1	41					540	0	42	1	20	SPARE	--
					Total Load:		14218 VA	11542 VA	10456 VA						
					Total Amps:		120 A	98 A	87 A						

Load Classification		NEC Reference	Connected Load	Demand Factor	Est. Demand
L	Lighting	NEC 220.42			
R	Receptacle	NEC 220.44	28744 VA	67.39%	19372 VA
E	Equipment		2480 VA	100.00%	2480 VA
M	Motor	NEC 430.24	4992 VA	125.00%	6240 VA
K	Kitchen	NEC 220.56			
H	Heating	NEC 220.51			

Load Totals
Total Connected Load: 36216 VA
Total Demand Load: 28092 VA
120/208 Wye System Current
Connected Amps: 101 A
Demand Amps: **78 A**

Copper Bus Size	225	**Ground**	Standard	**Notes:**
Voltage	120/208 Wye	**Mounting**	Surface	[1] PROVIDE 5mA GFCI BREAKER FOR PERSONNEL PROTECTION.
Phase	3	**Enclosure**	NEMA 1	
Wire	4	**# of 1-Pole Circuits**	42	
Lugs	MLO	**Neutral**	100.00%	
Breaker AIC Rating		**Feeder OCPD Size**	225	

tsk
225 South Arlington Avenue
Reno NV, 89501
phone: 775.857.2949
fax: 775.857.2403
www.tska.com

THESE DRAWINGS AND SPECIFICATIONS ARE THE PROPERTY OF TATE SNYDER KIMSEY ARCHITECTS AND MAY NOT BE REPRODUCED OR USED FOR ANY PURPOSE WITHOUT THE ARCHITECTS WRITTEN CONSENT. AS INSTRUMENTS OF SERVICE, THESE DOCUMENTS ARE NOT FINAL AND READY FOR USE, AND THEREFORE NOT VALID, UNLESS THEY ARE SEALED, SIGNED AND DATED.

Copyright, Ltd 2023

Consultant

PK Electrical, Inc.
Engineering Design Consulting
681 Sierra Rose Drive, Suite B | Reno, NV 89511 | 775.826.9010
4601 DTC Boulevard, Suite 740 | Denver, CO 80237 | 720.

Panel:	L5	Location:

Type	Description	Trip	Poles	#	A		B		C		#	Poles	Trip	Description	Type
M	DF-1	20	2	1	925	0					2	1	20	SPARE	--
				3			925	0			4	1	20	SPARE	--
M	EF-10	20	1	5					500	0	6	1	20	SPARE	--
R	RTU RECEPTS	20	1	7	900	0					8	1	20	SPARE	--
E	AUTO WATER VALVES	20	1	9			375	0			10	1	20	SPARE	--
R	R	20	1	11					1080	0	12	1	20	SPARE	--
R	R	20	1	13	900	0					14	1	20	SPARE	--
R	R	20	1	15			1140	0			16	1	20	SPARE	--
R	R	20	1	17					1140	0	18	1	20	SPARE	--
R	R	20	1	19	720	0					20	1	20	SPARE	--
R	R	20	1	21			540	0			22	1	20	SPARE	--
R	R	20	1	23					900	0	24	1	20	SPARE	--
R	R	20	1	25	180	0					26	1	20	SPARE	--
E	E	20	1	27			120	0			28	1	20	SPARE	--
M	M	20	1	29					1800	0	30	1	20	SPARE	--
M	M	20	1	31	1800	0					32	1	20	SPARE	--
R	R	20	1	33			180	0			34	1	20	SPARE	--
R	R	20	1	35					180	0	36	1	20	SPARE	--
--	SPARE	20	1	37	0	0					38	1	20	SPARE	--
--	SPARE	20	1	39			0	0			40	1	20	SPARE	--
--	SPARE	20	1	41					0	0	42	1	20	SPARE	--
				Total Load:	5425 VA		3280 VA		5600 VA						
				Total Amps:	48 A		27 A		49 A						

Load Classification		NEC Reference	Connected Load	Demand Factor	Est. Demand
L	Lighting	NEC 220.42			
R	Receptacle	NEC 220.44	7860 VA	100.00%	7860 VA
E	Equipment		495 VA	100.00%	495 VA
M	Motor	NEC 430.24	5950 VA	107.77%	6413 VA
K	Kitchen	NEC 220.56			
H	Heating	NEC 220.51			

Load Totals

Total Connected Load:	14305 VA
Total Demand Load:	14768 VA
120/208 Wye	**System Current**
Connected Amps:	40 A
Demand Amps:	**41 A**

Copper Bus Size	225	**Ground**	Standard	**Notes:**
Voltage	120/208 Wye	**Mounting**	Surface	
Phase	3	**Enclosure**	NEMA 1	
Wire	4	**# of 1-Pole Circuits**	42	
Lugs	MLO	**Neutral**	100.00%	
Breaker AIC Rating		**Feeder OCPD Size**		

Inverter: INV

Location	ELEC 103	**Voltage**	277V Single	**# of 1-Pole Circuits**	6
Supply From	DB	**Phase**	1	**Mains Type**	
Mounting	Surface	**Wire**	2	**Copper Bus Size**	225
Enclosure	NEMA 1	**AIC Rating**	65K	**MCB Rating:**	60 A

#	Description	Type	Trip	Poles	Load	Remarks
1						
2						
3						
4						
5						
6						
			Total Conn. Load:		0 VA	

Notes:
MYERS SUPERNOVA 6-1-06-S-TBD-L-M-Z-2YW 6KW INVERTER WITH BYPASS, SEISMIC MOUNTING, 2 YR FULL WARRANTY AND 10-YEAR PRO RATED BATTERIES. SEE SPECIFICATIONS.

tsk
225 South Arlington Avenue
Reno NV, 89501
phone: 775.857.2949
fax: 775.857.2403
www.tska.com

THESE DRAWINGS AND SPECIFICATIONS ARE THE PROPERTY OF TATE SNYDER KIMSEY ARCHITECTS AND MAY NOT BE REPRODUCED OR USED FOR ANY PURPOSE WITHOUT THE ARCHITECTS WRITTEN CONSENT. AS INSTRUMENTS OF SERVICE, THESE DOCUMENTS ARE NOT FINAL AND READY FOR USE, AND THEREFORE NOT VALID, UNLESS THEY ARE SEALED, SIGNED AND DATED.
Copyright, Ltd 2023

Consultant

PK Electrical, Inc.
Engineering Design Consulting
681 Sierra Rose Drive, Suite B | Reno, NV 89511 | 775.826.9010
4601 DTC Boulevard, Suite 740 | Denver, CO 80237 | 720.481.3290
pkelectrical.com

PLEASE RECYCLE

Project
CITY OF FERNLEY CRRC

Job No: 21-058.00

Owner
CITY OF FERNLEY

50% CONSTRUCTION DOCUMENTS

REVISIONS		
REV	DATE	DESCRIPTION

Sheet Title
PANEL SCHEDULES

Date: MARCH 21, 2023
Sheet No:
E0.05

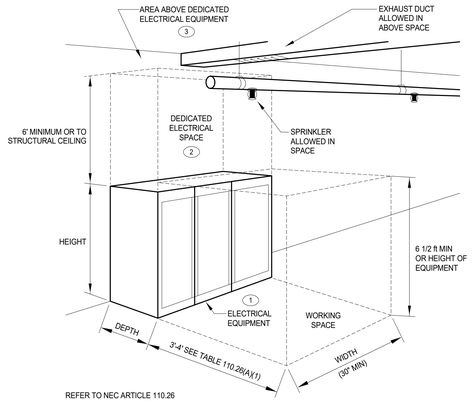

REFER TO NEC ARTICLE 110.26

NEC-ARTICLE 110.26 WORKING SPACE & DEDICATED ELECTRICAL SPACE REQUIREMENTS

6 / E0.06

SCALE: NONE

DETAIL NOTES

1. ELECTRICAL EQUIPMENT INCLUDES SWITCHGEAR, SWITCHBOARDS, DISTRIBUTION BOARDS, PANEL BOARDS, MOTOR CONTROL CENTER OR SIMILAR EQUIPMENT.
2. NO PIPING, DUCTS, LEAK PROTECTION APPARATUS, OR OTHER EQUIPMENT FOREIGN TO THE ELECTRICAL INSTALLATION SHALL BE LOCATED IN THIS ZONE.
3. THE AREA ABOVE THE DEDICATED SPACE REQUIRED BY 110.26(E)(1)(a) SHALL BE PERMITTED TO CONTAIN FOREIGN SYSTEMS, PROVIDED PROTECTION IS INSTALLED TO AVOID DAMAGE TO THE ELECTRICAL EQUIPMENT FROM CONDENSATION, LEAKS, OR BREAKS IN SUCH FOREIGN SYSTEM.

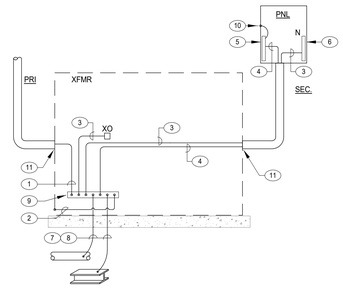

TRANSFORMER GROUNDING AND BONDING DETAIL

4 / E0.06

SCALE: NONE

TRANSFORMER GROUNDING AND BONDING NOTES

1. EQUIPMENT GROUNDING CONDUCTOR (PRIMARY) - PER NEC 2017, ARTICLE 250.122 AND 250.66.
2. SYSTEM BONDING JUMPER - PER NEC 2017, ARTICLE 250.28(D)(1).
3. GROUNDED CONDUCTOR (NEUTRAL) - DO NOT BOND THE GROUNDED CONDUCTOR TO THE FIRST SYSTEM DISCONNECTING MEANS IF THE SYSTEM BONDING JUMPER IS INSTALLED IN THE TRANSFORMER ENCLOSURE. SIZE THE SYSTEM BONDING JUMPER PER NEC 2017, ARTICLE 250.28(D)(1).
4. SUPPLY SIDE BONDING JUMPER (SECONDARY) - PER NEC 2017, ARTICLE 250.66, 250.30(A)(2) AND 250.102(C)(1).
5. EQUIPMENT GROUNDING TERMINAL BAR.
6. ISOLATED NEUTRAL TERMINAL BAR.
7. GROUNDING ELECTRODE - PER NEC 2017, ARTICLE 250.30(A)(4).
8. BONDING JUMPERS - PER NEC 2017, ARTICLE 250.66 AND 250.104(D)(1)(2)(3).
9. EQUIPMENT GROUNDING TERMINAL BAR - PER NEC 2017, ARTICLE 250.30(A)(1)(5) CONNECT TO A SINGLE POINT.
10. SUPPLY SIDE BONDING JUMPER (IF REQUIRED - SEE NOTE #3). PER NEC 2017, ARTICLE 250.30(A)(2).
11. BUSHINGS - PER NEC 2017, ARTICLE 300.4(G) AND 250.92.

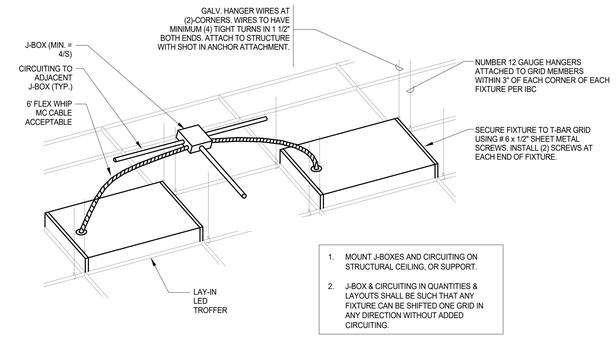

FIXTURE MOUNTING DETAIL @ T-BAR CEILING

1 / E0.06

SCALE: NONE

DOWNLIGHT MOUNTING DETAIL

2 / E0.06

SCALE: NONE

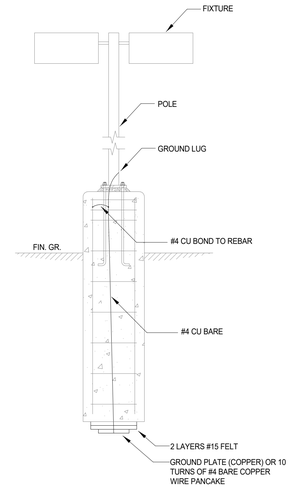

POLE BASE - PEDESTAL GROUNDING DETAIL

7 / E0.06

SCALE: NONE

REFER TO STRUCTURAL DRAWINGS FOR POLE BASE CONSTRUCTION AND INSTALLATION REQUIREMENTS. THIS DETAIL PROVIDED FOR AUXILIARY GROUNDING ELECTRODE REQUIREMENTS. BOND WITH CIRCUIT EQUIPMENT GROUNDING CONDUCTOR LUG IN POLE.

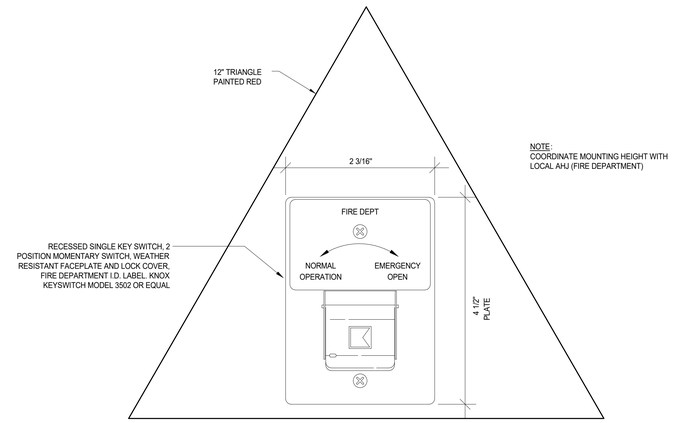

SERVICE ENTRANCE SHUNT TRIP STATION DETAIL

5 / E0.06

SCALE: NONE

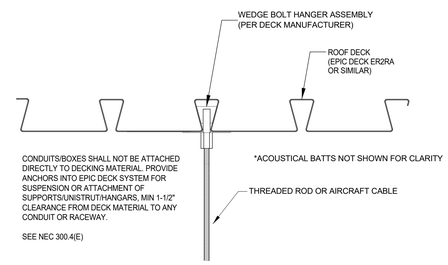

CONDUIT ROUTING AND ATTACHMENT IN ROOF ASSEMBLY

3 / E0.06

SCALE: NONE

tsk
225 South Arlington Avenue
Reno NV, 89501
phone: 775.857.2949
fax: 775.857.2403
www.tska.com

THESE DRAWINGS AND SPECIFICATIONS ARE THE PROPERTY OF TATE SNYDER KIMSEY ARCHITECTS AND MAY NOT BE REPRODUCED OR USED FOR ANY PURPOSE WITHOUT THE ARCHITECTS WRITTEN CONSENT. AS INSTRUMENTS OF SERVICE, THESE DOCUMENTS ARE NOT FINAL AND READY FOR USE, AND THEREFORE NOT VALID, UNLESS THEY ARE SEALED, SIGNED AND DATED.

Copyright, Ltd 2023

Consultant

PK Electrical, Inc.
Engineering Design Consulting
681 Sierra Rose Drive, Suite B | Reno, NV 89511 | 775.826.9010
4601 DTC Boulevard, Suite 740 | Denver, CO 80237 | 720.481.3290
pkelectrical.com

PLEASE RECYCLE

Project

CITY OF FERNLEY CRRC

Job No: 21-058.00

Owner

CITY OF FERNLEY

50% CONSTRUCTION DOCUMENTS

REVISIONS		
REV	DATE	DESCRIPTION

Sheet Title

DETAILS

Date: MARCH 21, 2023

Sheet No:

E0.06

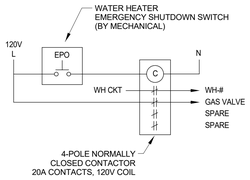

4 E0.07 WATER HEATER EMERGENCY STOP BUTTON

SCALE: NONE

ELECTRICAL CONTRACTOR TO VERIFY ALL REQUIREMENTS AND OPERATION WITH MECHANICAL CONTROLS CONTRACTOR PRIOR TO INSTALLATION AND WIRING OF COMPONENTS.

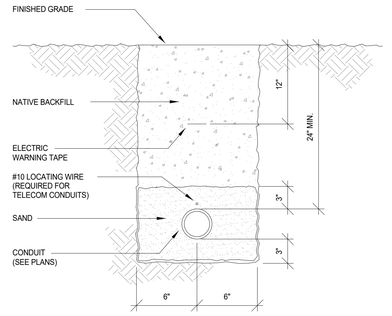

1 E0.07 TYP 12" TRENCH DETAIL

SCALE: NONE

DETAIL INDICATES ELECTRICAL REQUIREMENTS ONLY. REFER TO CIVIL PLANS FOR ADDITIONAL TRENCHING INFORMATION AND SPECIFIC REQUIREMENTS.

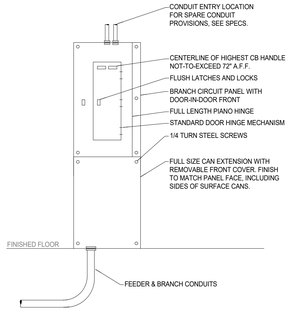

5 E0.07 SURFACE MOUNTED PANEL DETAIL

SCALE: NONE

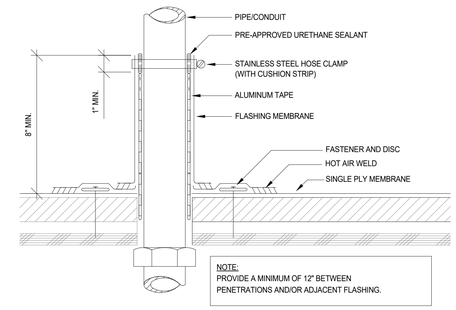

2 E0.07 ROOF PENETRATION DETAIL

SCALE: NONE

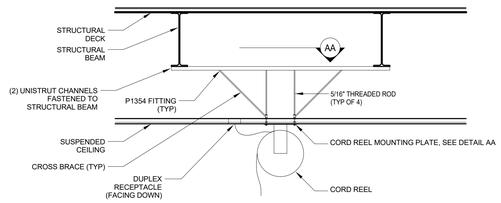

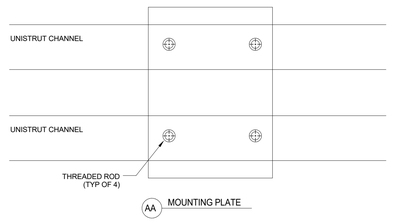

6 E0.07 CORD REEL MOUNTING

SCALE: NONE

DETAIL IS DIAGRAMMATIC - CONTRACTOR TO FIELD FABRICATE MOUNTING WITH SPECIFIC DETAILING FROM MANUFACTURER.

INSALLATION LOCATION	
LOCATION	SETBACK (TO CENTERLINE OF FOUNDATION)
SIDEWALK	18" FROM BACK OF WALK
CURB (W/ NO SIDEWALK)	30" FROM BACK OF CURB
ISLAND OR MEDIAN	CENTER BETWEEN CURBS

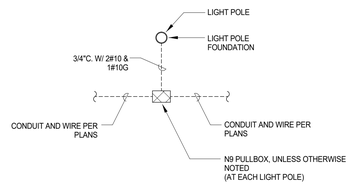

3 E0.07 LIGHT POLE INSTALLATION DETAIL

SCALE: NONE

tsk
225 South Arlington Avenue
Reno NV, 89501
phone: 775.857.2949
fax: 775.857.2403
www.tska.com

THESE DRAWINGS AND SPECIFICATIONS ARE THE PROPERTY OF TATE SNYDER KIMSEY ARCHITECTS AND MAY NOT BE REPRODUCED OR USED FOR ANY PURPOSE WITHOUT THE ARCHITECTS WRITTEN CONSENT. AS INSTRUMENTS OF SERVICE, THESE DOCUMENTS ARE NOT FINAL AND READY FOR USE, AND THEREFORE NOT VALID, UNLESS THEY ARE SEALED, SIGNED AND DATED.

Copyright, Ltd 2023

Consultant

PK Electrical, Inc.
Engineering Design Consulting
681 Sierra Rose Drive, Suite B | Reno, NV 89511 | 775.826.9010
4601 DTC Boulevard, Suite 740 | Denver, CO 80237 | 720.481.3290
pkelectrical.com

PLEASE RECYCLE

Project
CITY OF FERNLEY
CRRC

Job No: 21-058.00

Owner
CITY OF FERNLEY

50% CONSTRUCTION DOCUMENTS

REVISIONS		
REV	DATE	DESCRIPTION

Sheet Title
DETAILS

Date: MARCH 21, 2023
Sheet No:
E0.07

GENERAL NOTES

1. THIS DRAWING REPRESENTS THE EXISTING LIGHTING, POWER AND COMMUNICATIONS SYSTEMS WITHIN THE EXISTING BUILDING (AREA TO BE REMODELED). THE CONTRACTOR IS RESPONSIBLE FOR REMOVING, RELOCATING AND REWIRING ALL EQUIPMENT AS INDICATED ON THE DRAWINGS, INCLUDING EQUIPMENT THAT LIES WITHIN WALLS AND CEILINGS TO BE DEMOLISHED OR REMODELED.

2. (X) AND/OR DASHED LINES INDICATE EXISTING EQUIPMENT TO BE REMOVED, (R) AND/OR DASHED LINES INDICATE EXISTING EQUIPMENT TO BE RELOCATED, (E) AND/OR SOLID HALFTONE LINES INDICATE EXISTING EQUIPMENT TO REMAIN UNLESS NOTED OTHERWISE.

3. SALVAGEABLE ITEMS REMOVED DURING DEMOLITION SHALL BE OFFERED TO OWNER PRIOR TO DISPOSAL OR REMOVAL FROM SITE.

4. EXISTING CIRCUITS AS INDICATED ARE BASED ON CASUAL FIELD OBSERVATION AND INFORMATION PER RECORD DRAWINGS AND SHALL BE FIELD VERIFIED BY ELECTRICAL CONTRACTOR PRIOR TO START OF DEMOLITION WORK.

5. THE CONTRACTOR MAY SALVAGE AND REUSE EXISTING BOXES AND CONDUIT WHERE POSSIBLE. DAMAGED CONDUIT, FITTINGS BOXES, ETC. MAY NOT BE RE-USED. NEW CIRCUITING AS INDICATED ON THE DRAWINGS IS SHOWN FOR INTENT ONLY AND MAY VARY BASED ON ACTUAL FIELD CONDITIONS (NEW CIRCUITING SHALL MATCH EXISTING WHERE POSSIBLE TO UTILIZE EXISTING HOME-RUN CONDUITS, ETC.). KEEP AS-BUILT DRAWINGS CURRENT WITH ANY DEVIATION IN CIRCUITING FROM WHAT IS INDICATED WITHIN THESE PLANS.

6. THE CONTRACTOR SHALL REMOVE FROM THE JOB SITE ALL DISCARDED AND ABANDONED MATERIALS LEFT OVER FROM DEMOLITION AND INSTALLATION. THIS INCLUDES, BUT IS NOT LIMITED TO, CONDUIT, FASTENERS AND BOXES. MATERIALS EMBEDDED IN GRADE AND / OR CONCRETE MAY BE ABANDONED IN PLACE. ALL ABANDONED CONDUIT SHALL BE CAPPED.

SHEET NOTES

D01 DEMOLISH EXISTING POLE LIGHT AND BASE COMPLETE. REMOVE CONDUCTORS TO NEAREST FIXTURE TO REMAIN. EXISTING POLES CIRCUITED TO ADJACENT BUILDING (SENIOR CENTER).

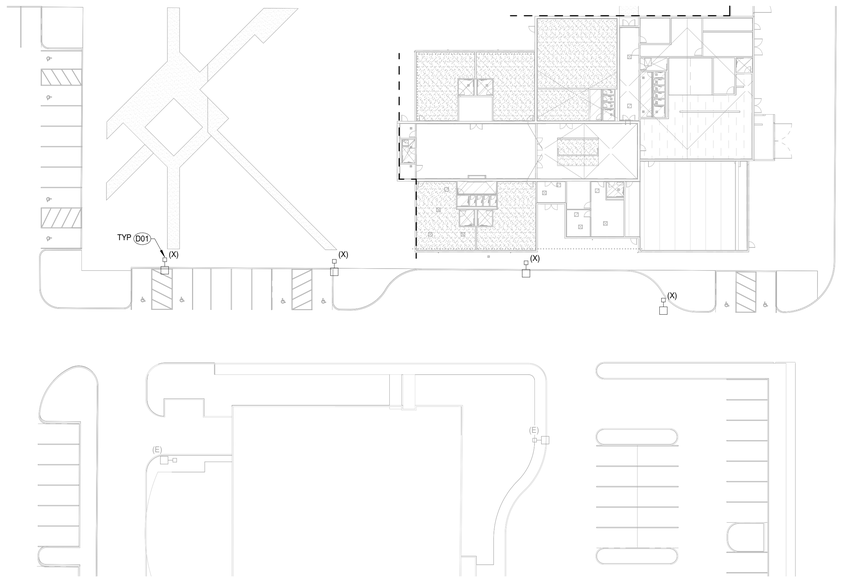

1 E1.01 ELECTRICAL DEMOLITION SITE PLAN

Scale: 1" = 30'-0"

tsk
225 South Arlington Avenue
Reno NV, 89501
phone: 775.857.2949
fax: 775.857.2403
www.tska.com

THESE DRAWINGS AND SPECIFICATIONS ARE THE PROPERTY OF TATE SNYDER KIMSEY ARCHITECTS AND MAY NOT BE REPRODUCED OR USED FOR ANY PURPOSE WITHOUT THE ARCHITECTS WRITTEN CONSENT. AS INSTRUMENTS OF SERVICE, THESE DOCUMENTS ARE NOT FINAL AND READY FOR USE, AND THEREFORE NOT VALID, UNLESS THEY ARE SEALED, SIGNED AND DATED.

Copyright, Ltd 2023

Consultant

PK Electrical, Inc.
Engineering Design Consulting
681 Sierra Rose Drive, Suite B | Reno, NV 89511 | 775.826.9010
4601 DTC Boulevard, Suite 740 | Denver, CO 80237 | 720.481.3290
pkelectrical.com

PLEASE RECYCLE

Project
CITY OF FERNLEY CRRC

Job No: 21-058.00

Owner
CITY OF FERNLEY

50% CONSTRUCTION DOCUMENTS

REVISIONS		
REV	DATE	DESCRIPTION

Sheet Title
DEMOLITION SITE PLAN

Date: MARCH 21, 2023

Sheet No:
E1.01

GENERAL NOTES

1. (E) AND/OR SOLID HALFTONE LINES INDICATE EXISTING EQUIPMENT, (R) AND/OR DASHED LINES INDICATE RELOCATED EQUIPMENT, (N) AND/OR SOLID LINES INDICATE NEW EQUIPMENT UNLESS NOTED OTHERWISE.
2. SEE ONELINE DIAGRAM(S) FOR CONDUIT, WIRE SIZES AND EQUIPMENT REQUIREMENTS.
3. IT IS THE CONTRACTOR'S RESPONSIBILITY TO COORDINATE WITH APPLICABLE UTILITY COMPANY'S DRAWINGS AND REPRESENTATIVES FOR DETERMINING THE EXACT RESPONSIBILITY OF EACH PARTY.
4. SEE UTILITY DRAWINGS FOR ALL UTILITY WORK WORK REQUIRED. CONTRACTOR SHALL BE RESPONSIBLE FOR INCLUDING ALL WORK REQUIRED IN BID. COORDINATE WITH EACH SITE UTILITY.
5. IT IS THE CONTRACTOR'S RESPONSIBILITY TO CALL 1-800-227-2600 FOR LOCATES PRIOR TO DIGGING. IT IS ALSO THE CONTRACTORS RESPONSIBILITY TO LOCATE ALL NON-UTILITY UNDERGROUND ITEMS.
6. THE MAXIMUM NUMBER OF CONDUIT BENDS SHOULD NOT BE GREATER THAN 270 DEGREES BETWEEN PULLING STRUCTURES. THIS INCLUDES THE AGGREGATE OF ALL HORIZONTAL AND VERTICAL CHANGES.
7. ALL CONDUIT, INNERDUCT, PULLBOXES AND VAULTS SHALL BE LABELED PER THE SPECIFICATIONS.
8. PROVIDE #10 CU CONDUCTORS IN 3/4" CONDUIT MINIMUM, UNLESS NOTED OTHERWISE, FOR ALL SITE LIGHTING AND SITE RECEPTACLE CIRCUITS.
9. ALL RECEPTACLES WITH WEATHER PROOF DESIGNATION SHALL BE PROVIDED WITH 'WHILE IN USE' COVERS.
10. FURNISH AND INSTALL METALLIC TRACE TAPE ON TOP OF CONDUITS IN TRENCH.
11. EACH CONDUIT AND INNERDUCT SHALL BE PROVIDED WITH A 1250 LBS. PULL ROPE.
12. COORDINATE LOCATION OF BELOW-GRADE CONDUITS, DUCT BANKS, ETC. WITH CIVIL ENGINEER AND OTHER TRADES PRIOR TO ROUGH-IN.

SHEET NOTES

P05 WIREMOLD OUTDOOR GROUND BOX, #XB814 WITH DUPLEX COVER, #XBB814C520BK. LOCATE AS DIRECTED BY ARCHITECT/OWNER.

ALL WORK PART OF BASE BID UNLESS NOTED OTHERWISE

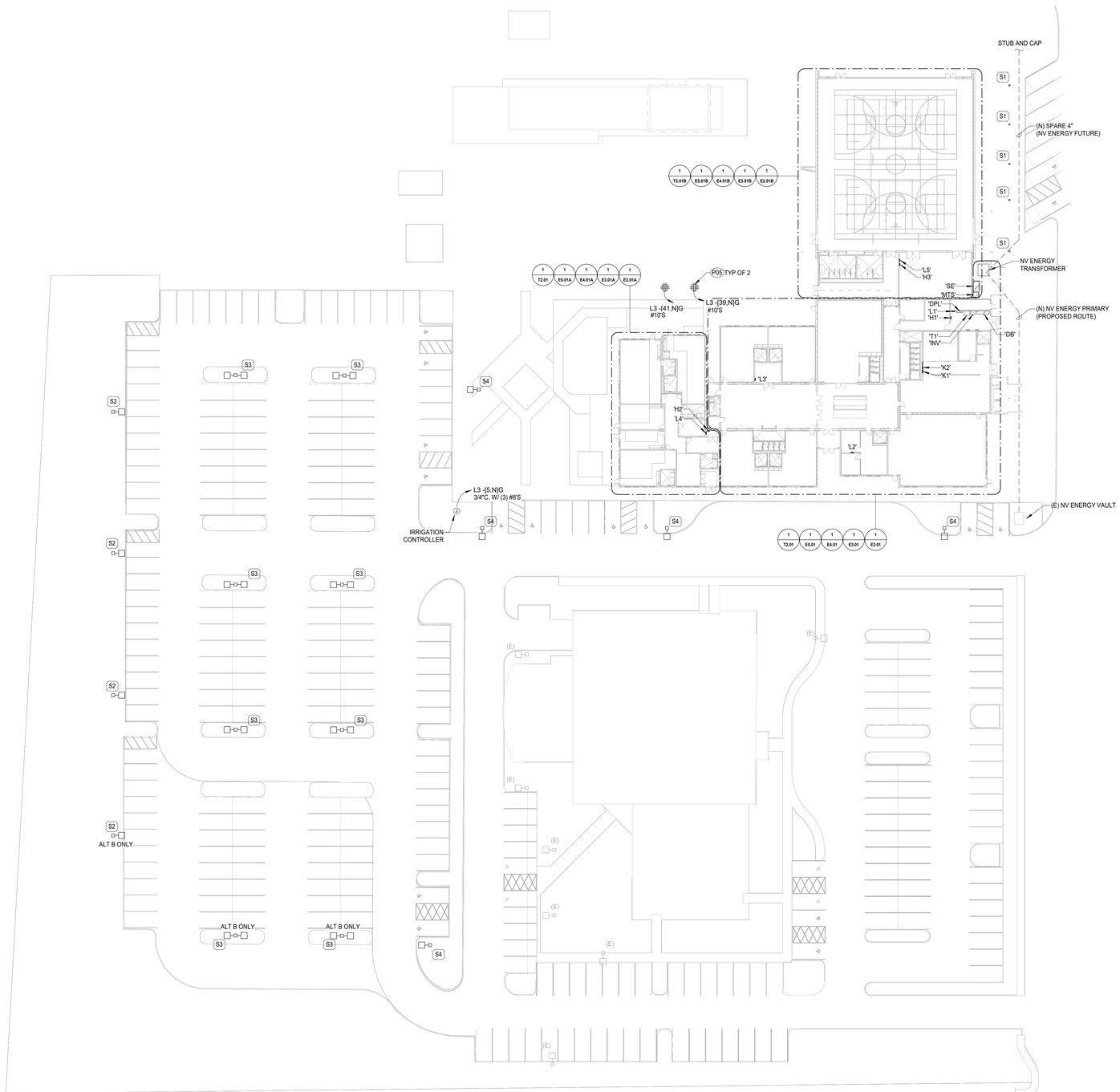

1 E1.02 ELECTRICAL SITE PLAN
Scale: 1" = 30'-0"

tsk
225 South Arlington Avenue
Reno NV, 89501
phone: 775.857.2949
fax: 775.857.2403
www.tska.com

THESE DRAWINGS AND SPECIFICATIONS ARE THE PROPERTY OF TATE SNYDER KIMSEY ARCHITECTS AND MAY NOT BE REPRODUCED OR USED FOR ANY PURPOSE WITHOUT THE ARCHITECTS WRITTEN CONSENT. AS INSTRUMENTS OF SERVICE, THESE DOCUMENTS ARE NOT FINAL AND READY FOR USE, AND THEREFORE NOT VALID, UNLESS THEY ARE SEALED, SIGNED AND DATED.

Copyright, Ltd 2023

Consultant

PK Electrical, Inc.
Engineering Design Consulting
681 Sierra Rose Drive, Suite B | Reno, NV 89511 | 775.826.9010
4601 DTC Boulevard, Suite 740 | Denver, CO 80237 | 720.481.3290
pkelectrical.com

PLEASE RECYCLE

Project
CITY OF FERNLEY CRRC

Job No: 21-058.00

Owner
CITY OF FERNLEY

50% CONSTRUCTION DOCUMENTS

REVISIONS		
REV	DATE	DESCRIPTION

Sheet Title
NEW WORK SITE PLAN

Date: MARCH 21, 2023
Sheet No:
E1.02

GENERAL NOTES

1. (E) AND/OR SOLID HALFTONE LINES INDICATE EXISTING EQUIPMENT, (R) AND/OR DASHED LINES INDICATE RELOCATED EQUIPMENT, (N) AND/OR SOLID LINES INDICATE NEW EQUIPMENT UNLESS NOTED OTHERWISE.
2. LIGHTING FIXTURES DESIGNATED AS 'EMERGENCY' SHALL BE WIRED TO OPERATE WITH LOCAL SWITCHING UNDER NORMAL POWER CONDITIONS AND SHALL OPERATE VIA EMERGENCY BATTERY PACK OR INVERTER UPON LOSS OF BUILDING UTILITY POWER ONLT, UNLESS NOTED OTHERWISE.
3. EXIT SIGNS SHALL BE WIRED AHEAD OF LOCAL SWITCHING AND LIGHTING CONTROL PANEL FOR CONTINUOUS OPERATION. EXIT SIGNS SHALL BE WALL-MOUNTED ABOVE DOORS WHERE PRACTICAL. PROVIDE ADDITIONAL EXIT SIGNS AS NECESSARY FOR APPROVAL BY THE AUTHORITY HAVING JURISDICTION, PER ARCHITECT'S FINAL PATH OF EGRESS / EXITING PLAN.
4. ELECTRICAL CONDUITS SHALL BE RUN CONCEALED WHERE BUILDING CONSTRUCTION ALLOWS. ANY EXPOSED CONDUIT SHALL BE APPROVED BY THE ARCHITECT PRIOR TO INSTALLATION. ANY EXPOSED CONDUIT, FITTING, SUPPORTS, ETC SHALL BE PAINTED TO MATCH THE SURFACE ON WHICH THEY ARE INSTALLED.
5. REFER TO ARCHITECTURAL REFLECTED CEILING PLANS, SECTIONS, ELEVATIONS, ETC. FOR EXACT LOCATION OF LIGHTING FIXTURES.
6. EXACT LOCATION AND MOUNTING HEIGHT OF EXTERIOR BUILDING-MOUNTED FIXTURES SHALL BE COORDINATED WITH ARCHITECT PRIOR TO ROUGH-IN.
7. CONTRACTOR SHALL BE RESPONSIBLE FOR COORDINATING FINAL FIXTURE LOCATIONS, ABOVE-CEILING HOUSING CLEARANCES, ETC. WITH MECHANICAL, PLUMBING, SPRINKLER CONTRACTOR AND OTHER TRADES PRIOR TO ROUGH-IN.
8. PROVIDE MULTIPLE-GANG FACEPLATES AS NECESSARY WHERE TWO OR MORE LIGHT SWITCHES ARE INDICATED IN A COMMON LOCATION. SINGLE-GANG FACEPLATES FOR A GROUP OF LIGHT SWITCHES ARE NOT PERMITTED.
9. PROVIDE STAINLESS STEEL DEVICE PLATES IN KITCHEN AND ROUGH-SERVICE AREAS.
10. CONDUIT FOR BUILDING-MOUNTED LIGHT FIXTURES SHALL BE ROUTED THROUGH INTERIOR OF BUILDING. LIGHT FIXTURE BACKBOXES SHALL BE RECESSED.

SHEET NOTES

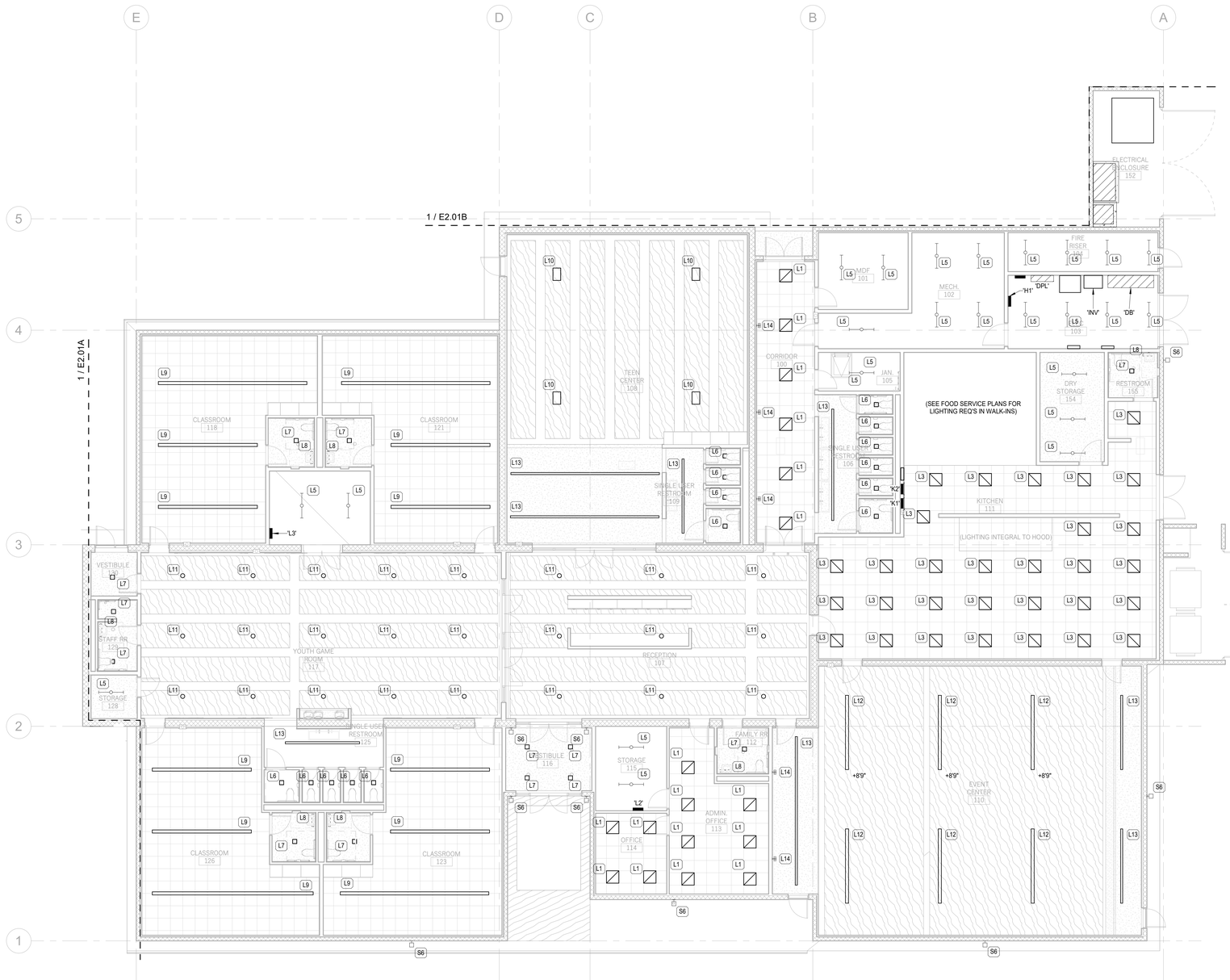

1 / E2.01 — LIGHTING PLAN - BASE BID
Scale: 1/8" = 1'-0"

tsk
225 South Arlington Avenue
Reno NV, 89501
phone: 775.857.2949
fax: 775.857.2403
www.tska.com

THESE DRAWINGS AND SPECIFICATIONS ARE THE PROPERTY OF TATE SNYDER KIMSEY ARCHITECTS AND MAY NOT BE REPRODUCED OR USED FOR ANY PURPOSE WITHOUT THE ARCHITECTS WRITTEN CONSENT. AS INSTRUMENTS OF SERVICE, THESE DOCUMENTS ARE NOT FINAL AND READY FOR USE, AND THEREFORE NOT VALID, UNLESS THEY ARE SEALED, SIGNED AND DATED.

Copyright, Ltd 2023

Consultant

PK Electrical, Inc.
Engineering Design Consulting
681 Sierra Rose Drive, Suite B | Reno, NV 89511 | 775.826.9010
4601 DTC Boulevard, Suite 740 | Denver, CO 80237 | 720.481.3290
pkelectrical.com

PLEASE RECYCLE

Project
CITY OF FERNLEY CRRC

Job No: 21-058.00

Owner
CITY OF FERNLEY

50% CONSTRUCTION DOCUMENTS

REVISIONS		
REV	DATE	DESCRIPTION

Sheet Title
LIGHTING PLAN - BASE BID

Date: MARCH 21, 2023

Sheet No:
E2.01

GENERAL NOTES

1. (E) AND/OR SOLID HALFTONE LINES INDICATE EXISTING EQUIPMENT, (R) AND/OR DASHED LINES INDICATE RELOCATED EQUIPMENT, (N) AND/OR SOLID LINES INDICATE NEW EQUIPMENT UNLESS NOTED OTHERWISE.
2. CONTRACTOR SHALL COORDINATE FINAL RECEPTACLE LOCATIONS WITH TELECOM OUTLETS PRIOR TO ROUGH-IN. EACH TELECOM OUTLET SHALL HAVE A RECEPTACLE LOCATED WITHIN 12", MEASURED FROM CENTER OF DEVICES.
3. MODULAR FURNITURE: ELECTRICAL CONTRACTOR RESPONSIBLE FOR ON-SITE COORDINATION WITH FURNITURE SUPPLIER TO VERIFY FINAL WIRING REQUIREMENTS, CIRCUITING, J-BOX LOCATIONS, ETC. PRIOR TO ROUGH-IN. ELECTRICAL CONTRACTOR TO PROVIDE ALL HARDWARE AND ACCESSORIES NECESSARY FOR A COMPLETE INSTALLATION. FURNITURE SUPPLIER TO PROVIDE POWER WHIPS, ELECTRICAL CONTRACTOR TO MAKE FINAL CONNECTIONS TO FURNITURE. DESIGN INTENT OF THESE DRAWINGS ASSUMES 3-CIRCUIT, 8-WIRE MODULAR FURNITURE SYSTEM (3H, 3N, G, DED, G). NO MORE THAN SIX (6) WORKSTATIONS PER EACH 3-CIRCUIT GROUP, UNLESS NOTED OTHERWISE.
4. COORDINATE EXACT MOUNTING HEIGHTS AND LOCATIONS OF GENERAL RECEPTACLES, SPECIAL OUTLETS AND DISCONNECT SWITCHES IN SHOP AREAS WITH OWNER AND EQUIPMENT SUPPLIERS PRIOR TO ROUGH-IN.
5. CONDUITS FOR ROOF-MOUNTED DEVICES AND EQUIPMENT SHALL BE RUN BELOW ROOF DECK/SYSTEM. ROOF MOUNTED CONDUITS WILL ONLY BE CONSIDERED AND APPROVED IN WRITING BY THE ARCHITECT/ENGINEER.
6. VERIFY EXACT ELECTRICAL REQUIREMENTS, PLUG CONFIGURATIONS, ETC., AND FINAL LOCATIONS OF OWNER-PROVIDED EQUIPMENT WITH OWNER'S REPRESENTATIVE PRIOR TO ORDERING OF MATERIALS AND ROUGH-IN.

SHEET NOTES

P01 POWERED AUTOMATIC VALVE JUNCTION BOX FLUSH IN WALL. COORDINATE ROUGH-IN WITH PLUMBING CONTRACTOR. INSTALL POWER SUPPLY IN ACCESSIBLE LOCATION. CONNECT ALL VALVES AS REQUIRED FOR COMPLETE SYSTEM.

P04 MOUNT RECEPTACLE TO TOP OF RACK, 6'0" AFF. VERIFY EXACT LOCATION WITH TELECOM CONTRACTOR PRIOR TO ROUGH IN.

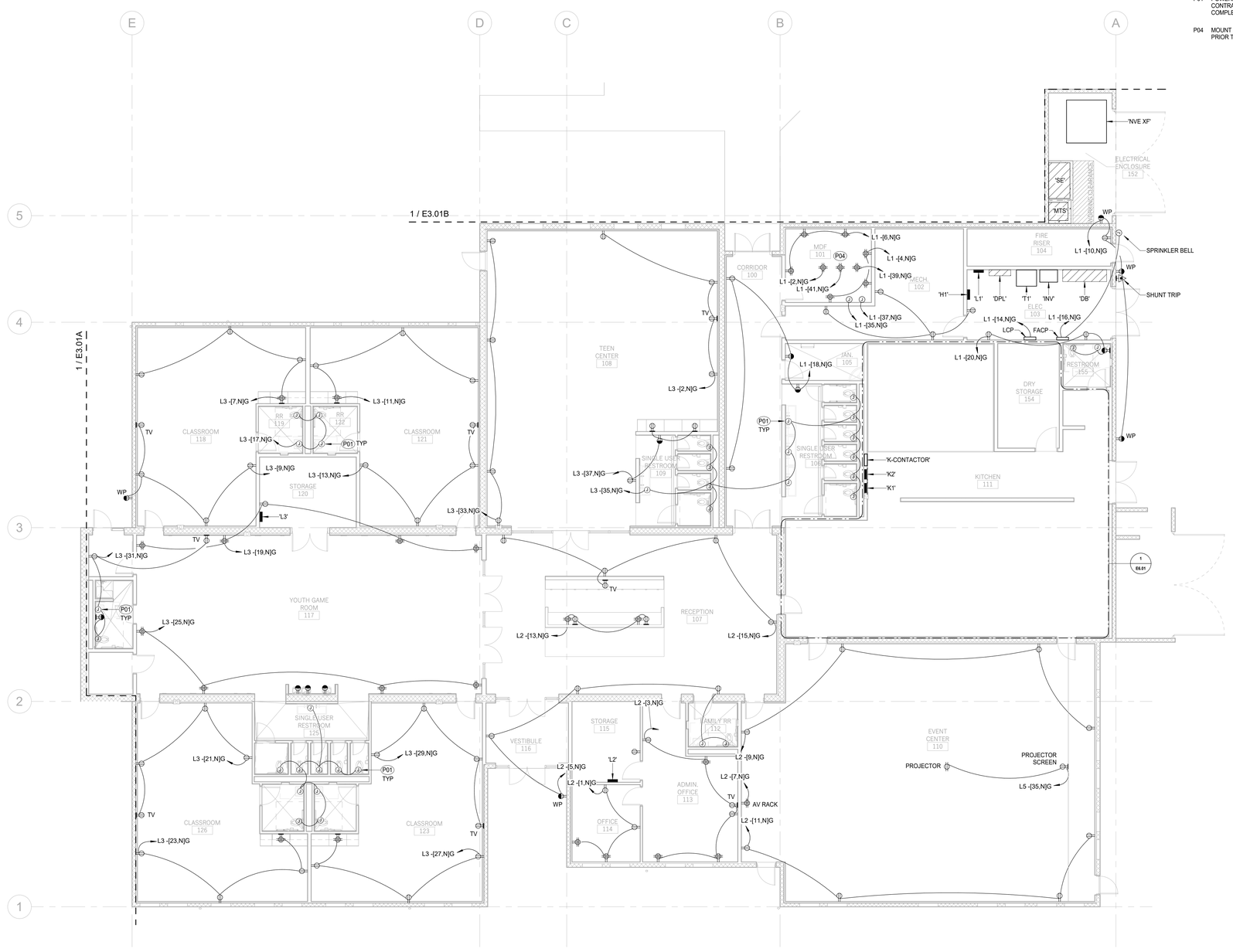

1 E3.01 POWER PLAN - BASE BID
Scale: 1/8" = 1'-0"

tsk
225 South Arlington Avenue
Reno NV, 89501
phone: 775.857.2949
fax: 775.857.2403
www.tska.com

THESE DRAWINGS AND SPECIFICATIONS ARE THE PROPERTY OF TATE SNYDER KIMSEY ARCHITECTS AND MAY NOT BE REPRODUCED OR USED FOR ANY PURPOSE WITHOUT THE ARCHITECTS WRITTEN CONSENT. AS INSTRUMENTS OF SERVICE, THESE DOCUMENTS ARE NOT FINAL AND READY FOR USE, AND THEREFORE NOT VALID, UNLESS THEY ARE SEALED, SIGNED AND DATED.

Copyright, Ltd 2023

Consultant

PK Electrical, Inc.
Engineering Design Consulting
681 Sierra Rose Drive, Suite B | Reno, NV 89511 | 775.826.9010
4601 DTC Boulevard, Suite 740 | Denver, CO 80237 | 720.481.3290
pkelectrical.com

PLEASE RECYCLE

Project
CITY OF FERNLEY CRRC

Job No: 21-058.00

Owner
CITY OF FERNLEY

50% CONSTRUCTION DOCUMENTS

REVISIONS		
REV	DATE	DESCRIPTION

Sheet Title
POWER PLAN - BASE BID

Date: MARCH 21, 2023

Sheet No:
E3.01

MECHANICAL EQUIPMENT SCHEDULE - BASE BID										
EQUIPMENT ID	EQUIPMENT DESCRIPTION	VOLTAGE	POLES	WATTAGE	WIRE SIZE (#12 UNO)	DISCONNECT	NEMA RATING	FUSE SIZE	PANEL - CIRCUIT	NOTES
ACI-1	SPLIT SYSTEM	120 V	1	0 VA	PER MANUF.	HARDWIRE				FED FROM OUTDOOR UNIT
ACI-2	SPLIT SYSTEM	120 V	1	0 VA	PER MANUF.	HARDWIRE				FED FROM OUTDOOR UNIT
EF-2	EXHAUST FAN	120 V	1	25 VA		HARDWIRE				SEE NOTES.
EF-3	EXHAUST FAN	120 V	1	100 VA		30A	NEMA 1		L3 - 1	
EF-4	EXHAUST FAN	120 V	1	98 VA		30A	NEMA 1		L3 - 3	
EF-5	EXHAUST FAN	120 V	1	25 VA		HARDWIRE				SEE NOTES.
EF-6	EXHAUST FAN	120 V	1	25 VA		HARDWIRE				SEE NOTES.
EWH-1	ELEC. WALL HEATER	120 V	1	1500 VA		HARDWIRE			L1 - 21	
EWH-2	ELEC. WALL HEATER	120 V	1	1500 VA		HARDWIRE			L1 - 23	
EWH-3	ELEC. WALL HEATER	120 V	1	1500 VA		HARDWIRE			L1 - 33	
WH-1	WATER HEATER	120 V	1	500 VA		FBO			L1 - 27	VIA CONTACTOR
WH-2	WATER HEATER	120 V	1	500 VA		FBO			L1 - 29	VIA CONTACTOR
WH-3	WATER HEATER	120 V	1	500 VA		FBO			L1 - 31	VIA CONTACTOR

GENERAL NOTES

1. (E) AND/OR SOLID HALFTONE LINES INDICATE EXISTING EQUIPMENT, (R) AND/OR DASHED LINES INDICATE RELOCATED EQUIPMENT, (N) AND/OR SOLID LINES INDICATE NEW EQUIPMENT UNLESS NOTED OTHERWISE.
2. THE CONTRACTOR SHALL OBTAIN ALL WIRING DIAGRAMS ASSOCIATED WITH THE MECHANICAL EQUIPMENT CONTROLS FROM THE MECHANICAL/CONTROLS CONTRACTOR. CONTROL WIRING SHALL BE PROVIDED AND INSTALLED BY CONTROLS CONTRACTOR. ANY CONDUIT REQUIRED FOR CONTROL WIRING SHALL BE PROVIDED AND INSTALLED BY ELECTRICAL CONTRACTOR AND SHALL BE COMPLETED UNDER THE SUPERVISION OF THE MECHANICAL/CONTROLS CONTRACTOR.
3. REFER TO MECHANICAL DRAWINGS FOR MECHANICAL UNIT MODEL NUMBERS AND SPECIFIC ELECTRICAL REQUIREMENTS, OPTIONS AND ACCESSORIES.
4. INFORMATION ON ARCHITECTURAL AND MECHANICAL DRAWINGS SUPERSEDE INFORMATION SHOWN ON ELECTRICAL DRAWINGS. ELECTRICAL CONTRACTOR SHALL COORDINATE WITH ARCHITECTURAL AND MECHANICAL DRAWINGS PRIOR TO ROUGH-IN.
5. ELECTRICAL CONTRACTOR IS RESPONSIBLE FOR VERIFYING ELECTRICAL REQUIREMENTS FOR FINAL MECHANICAL EQUIPMENT INSTALLED. SHOULD THERE BE ANY DISCREPANCY BETWEEN ACTUAL EQUIPMENT INSTALLED AND ELECTRICAL OR MECHANICAL DRAWINGS, CONTRACTOR SHALL NOTIFY ENGINEER IMMEDIATELY FOR CLARIFICATION AND FURTHER DIRECTION.
6. LOCATE ALL DISCONNECTS, STARTERS AND DRIVES WHERE ACCESSIBLE. PROVIDE ACCESS AND CLEARANCE AS REQUIRED PER NEC. PROVIDE ACCESS HATCH IF LOCATED ABOVE HARD LID CEILING.
7. DISCONNECT SWITCHES, STARTERS OR DRIVES PROVIDED BY MECHANICAL AND SHIPPED LOOSE ARE THE RESPONSIBILITY OF THE ELECTRICAL CONTRACTOR TO INSTALL.
8. PIPING AND / OR DUCTWORK SHALL NOT BE ROUTED IN THE DEDICATED ELECTRICAL EQUIPMENT SPACE AT OR ABOVE ELECTRICAL SWITCHBOARDS, DISTRIBUTION BOARDS, PANELBOARDS, ETC. (PER 2011 NEC 110.26E). PROVIDE DEPTH AND WIDTH OF WORKING SPACE FOR ELECTRICAL EQUIPMENT AS REQUIRED PER 2011 NEC 110.26.

SHEET NOTES

P03 FAN TO OPERATE WITH ROOM OCCUPANCY SENSOR.

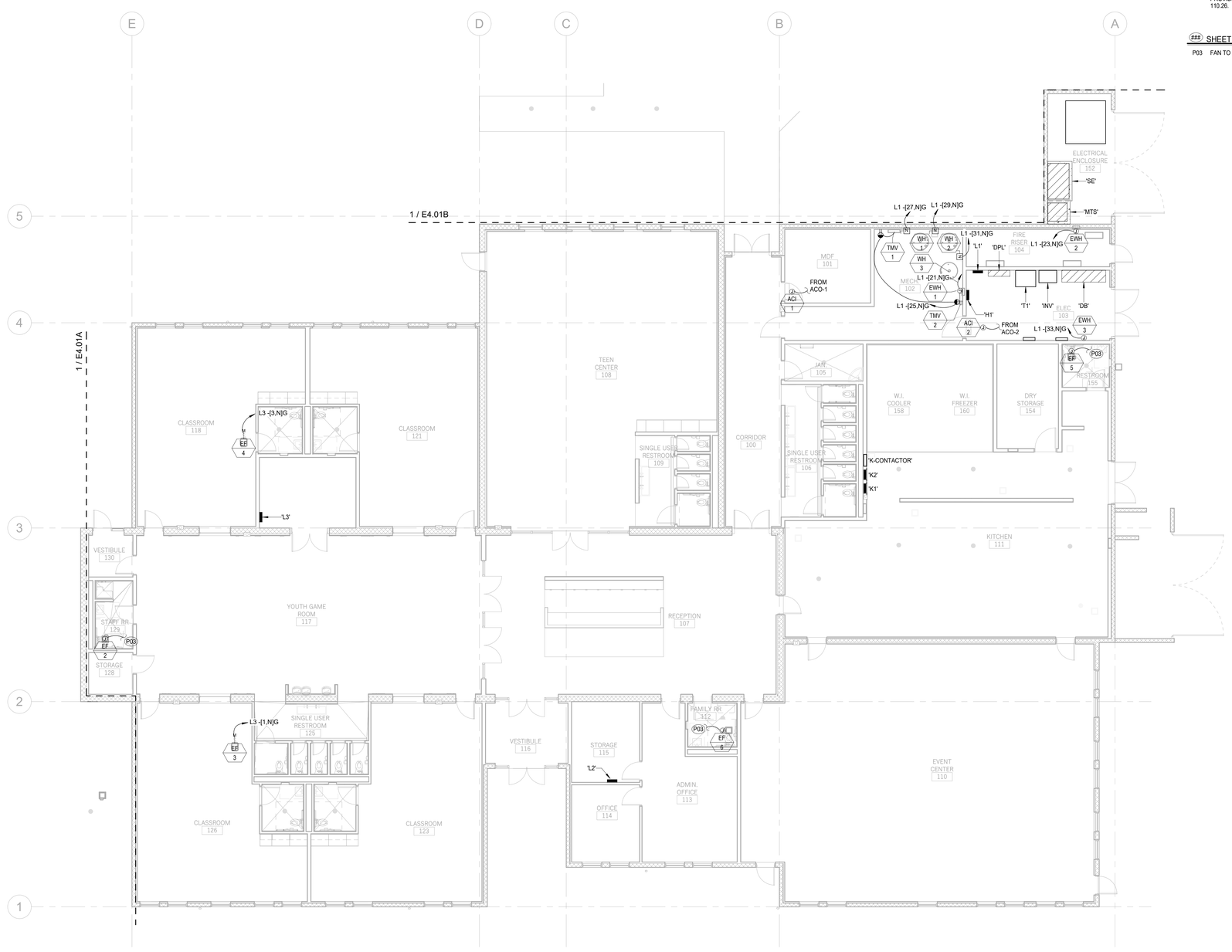

MECHANICAL POWER PLAN - BASE BID

1 / E4.01 — Scale: 1/8" = 1'-0"

tsk
225 South Arlington Avenue
Reno NV, 89501
phone: 775.857.2949
fax: 775.857.2403
www.tska.com

THESE DRAWINGS AND SPECIFICATIONS ARE THE PROPERTY OF TATE SNYDER KIMSEY ARCHITECTS AND MAY NOT BE REPRODUCED OR USED FOR ANY PURPOSE WITHOUT THE ARCHITECTS WRITTEN CONSENT. AS INSTRUMENTS OF SERVICE, THESE DOCUMENTS ARE NOT FINAL AND READY FOR USE, AND THEREFORE NOT VALID, UNLESS THEY ARE SEALED, SIGNED AND DATED.

Copyright, Ltd 2023

Consultant

PK Electrical, Inc.
Engineering Design Consulting
681 Sierra Rose Drive, Suite B | Reno, NV 89511 | 775.826.9010
4601 DTC Boulevard, Suite 740 | Denver, CO 80237 | 720.481.3290
pkelectrical.com

PLEASE RECYCLE

Project
CITY OF FERNLEY CRRC

Job No: 21-058.00

Owner
CITY OF FERNLEY

50% CONSTRUCTION DOCUMENTS

REVISIONS		
REV	DATE	DESCRIPTION

Sheet Title
MECHANICAL POWER PLAN - BASE BID

Date: MARCH 21, 2023

Sheet No:
E4.01

MECHANICAL EQUIPMENT SCHEDULE - BASE BID ROOF										
EQUIPMENT ID	EQUIPMENT DESCRIPTION	VOLTAGE	POLES	WATTAGE	WIRE SIZE (#12 UNO)	DISCONNECT	NEMA RATING	FUSE SIZE	PANEL - CIRCUIT	NOTES
ACO-1	SPLIT SYSTEM	208 V	2	4992 VA	#10'S	30A	3R		L1 - 11,13	
ACO-2	SPLIT SYSTEM	208 V	2	4992 VA	#10'S	30A	3R		L1 - 17,19	
EF-1	EXHAUST FAN	120 V	1	500 VA		INTEGRAL			L1 - 1	
KEF-1	KITCHEN EX. FAN	208 V	3	3800 VA		30A	3R		L1 - 5,7,9	
RTU-1	ROOF TOP UNIT	480 V	3	34777 VA	1"C. W/ (3) #6 & #10G.	100A	3R	50A	H1 - 1,3,5	
RTU-2	ROOF TOP UNIT	480 V	3	57200 VA	1-1/4"C. W/ (3)#2 & #8G.	100A	3R	80A	H1 - 7,9,11	
RTU-3	ROOF TOP UNIT	480 V	3	9960 VA		30A	3R	15A	H1 - 25,27,29	
RTU-4	ROOF TOP UNIT	480 V	3	9960 VA		30A	3R	15A	H1 - 31,33,35	
RTU-5	ROOF TOP UNIT	480 V	3	12450 VA		30A	3R	20A	H1 - 2,4,6	
RTU-6	ROOF TOP UNIT	480 V	3	9960 VA		30A	3R	20A	H1 - 14,16,18	
RTU-7	ROOF TOP UNIT	480 V	3	9960 VA		30A	3R	15A	H1 - 13,15,17	
RTU-8	ROOF TOP UNIT	480 V	3	9960 VA		30A	3R	20A	H1 - 37,39,41	
RTU-9	ROOF TOP UNIT	480 V	3	9960 VA		30A	3R	15A	H1 - 19,21,23	
RTU-10	ROOF TOP UNIT	480 V	3	12450 VA		30A	3R	20A	H1 - 8,10,12	

GENERAL NOTES

1. (E) AND/OR SOLID HALFTONE LINES INDICATE EXISTING EQUIPMENT, (R) AND/OR DASHED LINES INDICATE RELOCATED EQUIPMENT, (N) AND/OR SOLID LINES INDICATE NEW EQUIPMENT UNLESS NOTED OTHERWISE.
2. THE CONTRACTOR SHALL OBTAIN ALL WIRING DIAGRAMS ASSOCIATED WITH THE MECHANICAL EQUIPMENT CONTROLS FROM THE MECHANICAL/CONTROLS CONTRACTOR. CONTROL WIRING SHALL BE PROVIDED AND INSTALLED BY CONTROLS CONTRACTOR. ANY CONDUIT REQUIRED FOR CONTROL WIRING SHALL BE PROVIDED AND INSTALLED BY ELECTRICAL CONTRACTOR AND SHALL BE COMPLETED UNDER THE SUPERVISION OF THE MECHANICAL/CONTROLS CONTRACTOR.
3. REFER TO MECHANICAL DRAWINGS FOR MECHANICAL UNIT MODEL NUMBERS AND SPECIFIC ELECTRICAL REQUIREMENTS, OPTIONS AND ACCESSORIES.
4. INFORMATION ON ARCHITECTURAL AND MECHANICAL DRAWINGS SUPERSEDE INFORMATION SHOWN ON ELECTRICAL DRAWINGS. ELECTRICAL CONTRACTOR SHALL COORDINATE WITH ARCHITECTURAL AND MECHANICAL DRAWINGS PRIOR TO ROUGH-IN.
5. ELECTRICAL CONTRACTOR IS RESPONSIBLE FOR VERIFYING ELECTRICAL REQUIREMENTS FOR FINAL MECHANICAL EQUIPMENT INSTALLED. SHOULD THERE BE ANY DISCREPANCY BETWEEN ACTUAL EQUIPMENT INSTALLED AND ELECTRICAL OR MECHANICAL DRAWINGS, CONTRACTOR SHALL NOTIFY ENGINEER IMMEDIATELY FOR CLARIFICATION AND FURTHER DIRECTION.
6. LOCATE ALL DISCONNECTS, STARTERS AND DRIVES WHERE ACCESSIBLE. PROVIDE ACCESS AND CLEARANCE AS REQUIRED PER NEC. PROVIDE ACCESS HATCH IF LOCATED ABOVE HARD LID CEILING.
7. DISCONNECT SWITCHES, STARTERS OR DRIVES PROVIDED BY MECHANICAL AND SHIPPED LOOSE ARE THE RESPONSIBILITY OF THE ELECTRICAL CONTRACTOR TO INSTALL.
8. PIPING AND / OR DUCTWORK SHALL NOT BE ROUTED IN THE DEDICATED ELECTRICAL EQUIPMENT SPACE AT OR ABOVE ELECTRICAL SWITCHBOARDS, DISTRIBUTION BOARDS, PANELBOARDS, ETC. (PER 2011 NEC 110.26E). PROVIDE DEPTH AND WIDTH OF WORKING SPACE FOR ELECTRICAL EQUIPMENT AS REQUIRED PER 2011 NEC 110.26.

SHEET NOTES

P02 CONNECT TO 120V/20A GFCI RECEPTACLE FURNISHED WITH UNIT.

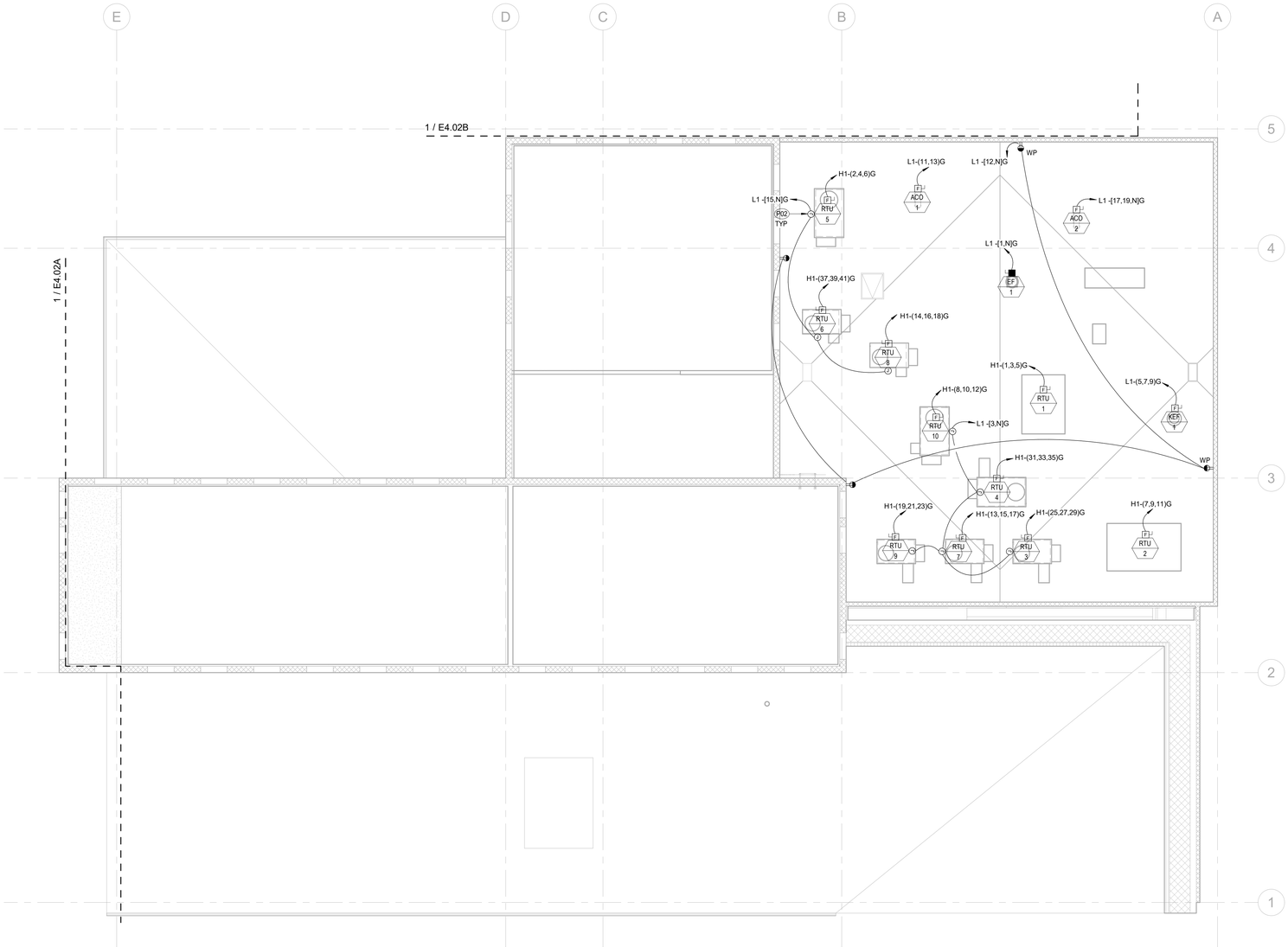

1 / E4.02 ROOF MECHANICAL POWER PLAN - BASE BID

Scale: 1/8" = 1'-0"

tsk
225 South Arlington Avenue
Reno NV, 89501
phone: 775.857.2949
fax: 775.857.2403
www.tska.com

THESE DRAWINGS AND SPECIFICATIONS ARE THE PROPERTY OF TATE SNYDER KIMSEY ARCHITECTS AND MAY NOT BE REPRODUCED OR USED FOR ANY PURPOSE WITHOUT THE ARCHITECTS WRITTEN CONSENT. AS INSTRUMENTS OF SERVICE, THESE DOCUMENTS ARE NOT FINAL AND READY FOR USE, AND THEREFORE NOT VALID, UNLESS THEY ARE SEALED, SIGNED AND DATED.

Copyright, Ltd 2023

Consultant

PK Electrical, Inc.
Engineering Design Consulting
681 Sierra Rose Drive, Suite B | Reno, NV 89511 | 775.826.9010
4601 DTC Boulevard, Suite 740 | Denver, CO 80237 | 720.481.3290
pkelectrical.com

PLEASE RECYCLE

Project
CITY OF FERNLEY CRRC

Job No: 21-058.00

Owner
CITY OF FERNLEY

50% CONSTRUCTION DOCUMENTS

REVISIONS		
REV	DATE	DESCRIPTION

Sheet Title
ROOF MECHANICAL POWER PLAN - BASE BID

Date: MARCH 21, 2023

Sheet No:
E4.02

GENERAL NOTES

1. (E) AND/OR SOLID HALFTONE LINES INDICATE EXISTING EQUIPMENT, (R) AND/OR DASHED LINES INDICATE RELOCATED EQUIPMENT, (N) AND/OR SOLID LINES INDICATE NEW EQUIPMENT UNLESS NOTED OTHERWISE.
2. COORDINATE DEVICE PLACEMENT IN CEILING WITH OTHER TRADES, SUCH AS LIGHTING, TELECOM, MECHANICAL, ETC. ALL FIRE ALARM DEVICES LOCATED IN CEILING TILES SHALL BE LOCATED IN THE CENTER OF THE CEILING TILE UNLESS SPECIFICALLY NOTED OR APPROVED TO DO OTHERWISE.
3. INFORMATION ON ARCHITECTURAL AND MECHANICAL DRAWINGS SUPERSEDE INFORMATION SHOWN ON ELECTRICAL DRAWINGS. ELECTRICAL CONTRACTOR SHALL COORDINATE WITH ARCHITECTURAL AND MECHANICAL DRAWINGS PRIOR TO ROUGH-IN.

SHEET NOTES

F01 SOUND SYSTEM SHUNT RELAY. CONNECT TO FACP TO SHUTDOWN AUDIO SYSTEM UPON FIRE ALARM SYSTEM ACTIVATION.

F02 KITCHEN HOOD MONITOR MODULE. COORDINATE LOCATION WITH FOOD SERVICE CONTRACTOR.

F03 PROVIDE CONDUIT AND WIRING AS REQUIRED FOR POST INDICATOR VALVE MONITORING (PIV). SEE CIVIL PLANS FOR LOCATION.

F04 PROVIDE MONITOR MODULES FOR SPRINKLER SYSTEM AS REQUIRED. COORDINATE WITH FIRE PROTECTION CONTRACTOR FOR EXACT QUANTITY AND LOCATION.

F05 CONNECT FIRE ALARM SYSTEM TO LIGHTING CONTROL SYSTEM. FIRE ALARM SHALL FORCE ON ALL GYM/EVENTS/CORRIDOR LIGHTING TO FULL OUTPUT UPON ACTIVATION.

F06 WATERFLOW BELL. PROVIDED BY SPRINKLER CONTRACTOR, INSTALLED AND WIRED BY ELECTRICAL. PROVIDE 120V CIRCUIT THROUGH FLOW SWITCH.

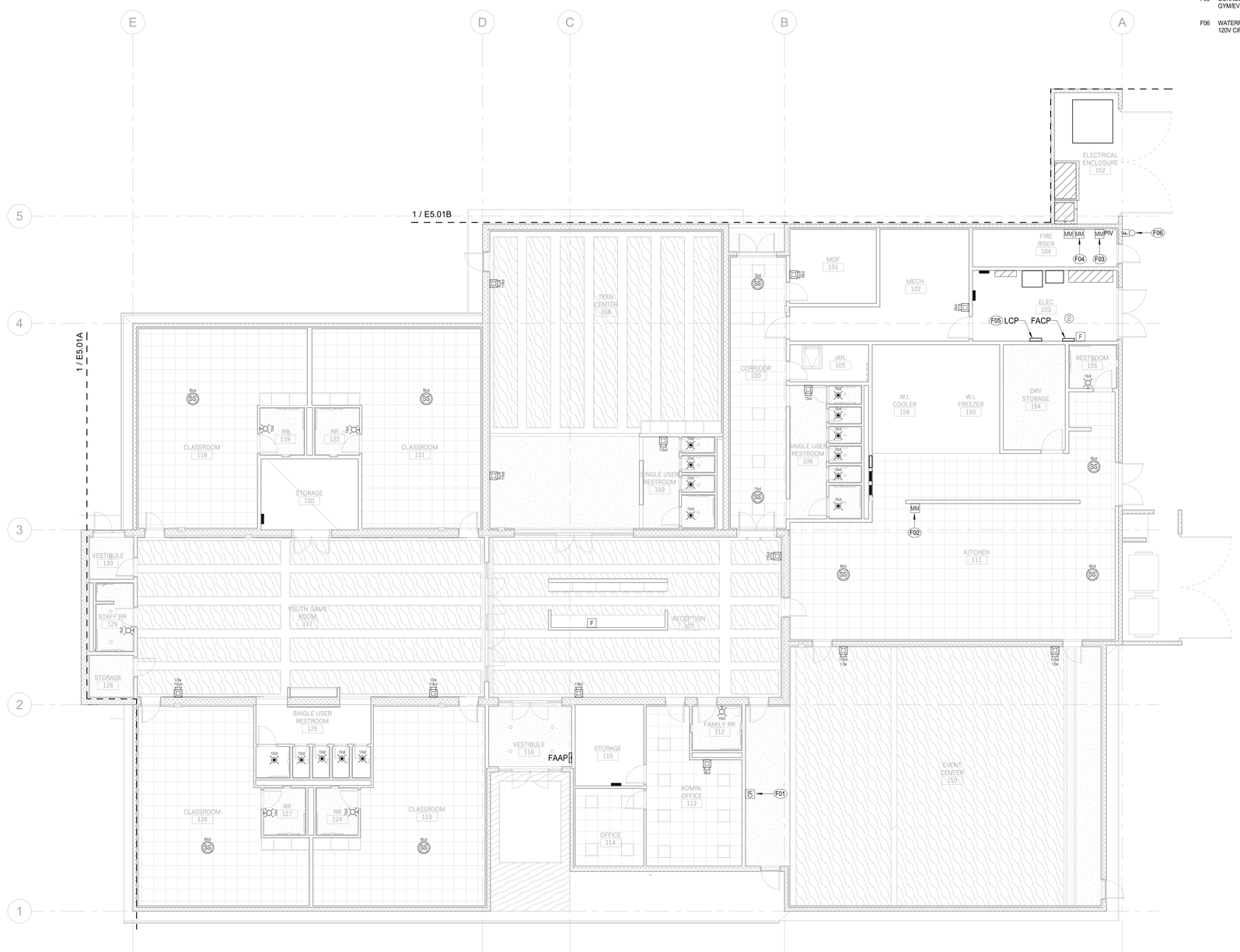

1 / E5.01 FIRE ALARM PLAN - BASE BID
Scale: 1/8" = 1'-0"

tsk
225 South Arlington Avenue
Reno NV, 89501
phone: 775.857.2949
fax: 775.857.2403
www.tska.com

THESE DRAWINGS AND SPECIFICATIONS ARE THE PROPERTY OF TATE SNYDER KIMSEY ARCHITECTS AND MAY NOT BE REPRODUCED OR USED FOR ANY PURPOSE WITHOUT THE ARCHITECTS WRITTEN CONSENT. AS INSTRUMENTS OF SERVICE, THESE DOCUMENTS ARE NOT FINAL AND READY FOR USE, AND THEREFORE NOT VALID, UNLESS THEY ARE SEALED, SIGNED AND DATED.

Copyright, Ltd 2023

Consultant

PK Electrical, Inc.
Engineering Design Consulting
681 Sierra Rose Drive, Suite B | Reno, NV 89511 | 775.826.9010
4601 DTC Boulevard, Suite 740 | Denver, CO 80237 | 720.481.3290
pkelectrical.com

PLEASE RECYCLE

Project
CITY OF FERNLEY CRRC

Job No: 21-058.00

Owner
CITY OF FERNLEY

50% CONSTRUCTION DOCUMENTS

REVISIONS		
REV	DATE	DESCRIPTION

Sheet Title
FIRE ALARM PLAN - BASE BID

Date: MARCH 21, 2023

Sheet No:
E5.01

KITCHEN EQUIPMENT SCHEDULE - BASE BID

EQUIPMENT ID	EQUIPMENT DESCRIPTION	VOLTAGE	POLES	WATTAGE	WIRE SIZE (#12 UNO)	DISCONNECT	NEMA RATING	FUSE SIZE	PANEL - CIRCUIT	NOTES
K01	AIR COOLED ROOF MTD REFRIG RACK	208 V	3	12284 VA	503	60A	NEMA 3R	50A	K1 - 1,3,5	
K06	AIR CURTAIN	120 V	1	1180 VA		30A	NEMA 1		K1 - 13	
K06	AIR CURTAIN	120 V	1	1180 VA		30A	NEMA 1		K1 - 15	
K08	ICE MAKER	208 V	2	2080 VA		30A	NEMA 1	15A	K1 - 9,11	
K09	REMOTE CONDENSER FOR K08	120 V	1	218 VA		MOTOR RATED SWITCH	NEMA 3R		K1 - 7	
K15	WALK-IN FREEZER	120 V	1	650 VA		HARDWIRE			K1 - 17	
K16	EVAP COIL (FREEZER)	208 V	2	416 VA		HARDWIRE			K1 - 21,23	
K20	WALK-IN COOLER	120 V	1	300 VA		HARDWIRE			K1 - 19	
K21	EVAP COIL (COOLER)	120 V	1	384 VA		HARDWIRE			K1 - 25	
K30	UNDERCOUNTER DISHWASHER	120 V	1	1440 VA		RECEPTACLE	NEMA 5-15R		K1 - 27	PROVIDE GFCI BREAKER
K31	DISPOSER	208 V	2	1601 VA		HARDWIRE			K1 - 29,31	
K35	2-SECTION ROLL-IN REFRIGERATOR	120 V	1	1368 VA		RECEPTACLE	NEMA 5-15R		K1 - 33	PROVIDE GFCI BREAKER
K37	MOBILE HEATED WARMING CABINET	120 V	1	1500 VA		GFCI RECEPTACLE	NEMA 5-15R		K1 - 35	
K38	MOBILE HEATED CABINET	120 V	1	2000 VA		GFCI RECEPTACLE	NEMA 5-20R		K1 - 37	
K39	TYPE ONE EXHAUST HOOD	120 V	1	100 VA		HARDWIRE			K1 - 39	
K43	FIRE SUPPRESSION SYS. CONTROL PANEL	120 V	1	1560 VA		HARDWIRE			K1 - 41	
K46	DOUBLE CONVECTION OVEN	120 V	1	960 VA		RECEPTACLE	NEMA 5-15R		K1 - 2	PROVIDE GFCI BREAKER; VIA HOOD SHUTDOWN CONTACTOR
K46	DOUBLE CONVECTION OVEN	120 V	1	960 VA		RECEPTACLE	NEMA 5-15R		K1 - 4	PROVIDE GFCI BREAKER; VIA HOOD SHUTDOWN CONTACTOR
K49	MOBILE REFRIGERATD BASE	120 V	1	804 VA		RECEPTACLE	NEMA 5-15R		K1 - 6	PROVIDE GFCI BREAKER; VIA HOOD SHUTDOWN CONTACTOR
K51	GAS COMBI OVEN	208 V	2	3120 VA		HARDWIRE			K1 - 8,10	VIA HOOD SHUTDOWN CONTACTOR
K55	PREP TABLE CONV. REC.	120 V	1	180 VA		GFCI RECEPTACLE	NEMA 5-20R		K1 - 12	
K55	PREP TABLE CONV. REC.	120 V	1	180 VA		GFCI RECEPTACLE	NEMA 5-20R		K1 - 12	
K55	PREP TABLE CONV. REC.	120 V	1	180 VA		GFCI RECEPTACLE	NEMA 5-20R		K1 - 12	
K61	MOBILE WORK TABLE CORD-DROP	120 V	1	720 VA		GFCI RECEPTACLE	NEMA 5-15R		K1 - 14	PROVIDE CORD REEL
K61	MOBILE WORK TABLE CORD-DROP	120 V	1	720 VA		GFCI RECEPTACLE	NEMA 5-15R		K1 - 14	PROVIDE CORD REEL
K63	2-SECTION ROLL-THRU HEATED CABIENT	208 V	2	3000 VA		HARDWIRE			K1 - 16,18	PROVIDE OVERHEAD CORD DROP
K65	MOBILE WORK TABLE CORD-DROP	120 V	1	720 VA		GFCI RECEPTACLE	NEMA 5-15R		K1 - 20	PROVIDE CORD REEL
K65	MOBILE WORK TABLE CORD-DROP	120 V	1	720 VA		GFCI RECEPTACLE	NEMA 5-15R		K1 - 20	PROVIDE CORD REEL
K66	MICROWAVE OVEN	120 V	1	1608 VA		GFCI RECEPTACLE	NEMA 5-20R		K1 - 22	PROVIDE CORD REEL
K68	MOBILE WORK TABLE CORD-DROP	120 V	1	720 VA		GFCI RECEPTACLE	NEMA 5-15R		K1 - 24	PROVIDE CORD REEL
K68	MOBILE WORK TABLE CORD-DROP	120 V	1	720 VA		GFCI RECEPTACLE	NEMA 5-15R		K1 - 24	PROVIDE CORD REEL
K69	ROLL-THRU REFERIGERATOR	120 V	1	1392 VA		GFCI RECEPTACLE	NEMA 5-15R		K1 - 26	PROVIDE CORD REEL
K71	MOBILE HEATED CABINET	120 V	1	1920 VA		GFCI RECEPTACLE	NEMA 5-20R		K1 - 28	PROVIDE CORD REEL
K71	MOBILE HEATED CABINET	120 V	1	1920 VA		GFCI RECEPTACLE	NEMA 5-20R		K1 - 30	PROVIDE CORD REEL
K71	MOBILE HEATED CABINET	120 V	1	1920 VA		GFCI RECEPTACLE	NEMA 5-20R		K1 - 32	PROVIDE CORD REEL
K74	PREP TABLE CONV. REC.	120 V	1	480 VA		GFCI RECEPTACLE	NEMA 5-20R		K2 - 1	
K74	PREP TABLE CONV. REC.	120 V	1	480 VA		GFCI RECEPTACLE	NEMA 5-20R		K2 - 1	
K74	PREP TABLE CONV. REC.	120 V	1	480 VA		GFCI RECEPTACLE	NEMA 5-20R		K2 - 1	
K82	POINT-OF-SALE SYSTEM	120 V	1	600 VA		FLOORBOX	NEMA 5-20R		K2 - 3	PROVIDE GFCI BREAKER
K83	CARD READERS	120 V	1	600 VA		FLOORBOX	NEMA 5-20R		K2 - 5	PROVIDE GFCI BREAKER
K84	MOBILE MILK COOLER	120 V	1	996 VA		FLOORBOX	NEMA 5-20R		K2 - 7	PROVIDE GFCI BREAKER
K86	DROP-IN 4-PAN HOT/COLD	208 V	2	3328 VA		FLOORBOX	NEMA 14-20R		K2 - 9,11	PROVIDE GFCI BREAKER
K88	SERVING COUNTER	120 V	1	996 VA		FLOORBOX	NEMA 5-20R		K2 - 13	PROVIDE GFCI BREAKER
K88	SERVING COUNTER	120 V	1	996 VA		FLOORBOX	NEMA 5-20R		K2 - 15	PROVIDE GFCI BREAKER
K91	DROP-IN 4-PAN HOT/COLD	208 V	2	3328 VA		FLOORBOX	NEMA 14-20R		K2 - 17,19	PROVIDE GFCI BREAKER

(###) SHEET NOTES

K01 PROVIDE CONDUIT SEAL-OFFS AT ALL CONDUITS LEAVING COOLER AND FREEZER.

K02 CONNECT FREEZER DRAIN HEAT TRACE. COORDINATE REQUIREMENTS WITH FOOD SERVICE VENDOR AND MECHANICAL CONTRACTOR. FIELD VERIFY.

K03 PROVIDE SWITCH, JUNCTION BOX, AND CONNECTION FOR WALK-IN COOLER AND FREEZER LIGHTING. THE ELECTRICAL CONTRACTOR SHALL INSTALL LIGHTING FIXTURES IN WALK-IN COOLER AND WALK-IN FREEZER, PROVIDED BY OTHERS. COORDINATE REQUIREMENTS WITH KITCHEN EQUIPMENT PROVIDER. FIELD VERIFY.

K04 PROVIDE RECESSED CONTACTOR CABINET WITH HINGED AND LOCKABLE COVER FOR ALL HOOD EQUIPMENT SHUTDOWN BY ANSUL SYSTEM. PROVIDE ELECTRICALLY OPERATED AND MECHANICALLY HELD CONTACTORS, QUANTITY AND SIZE AS INDICATED IN EQUIPMENT SCHEDULE. PROVIDE LABELS FOR EACH CONTACTOR INDICATING THE LOAD CONTROLLED.

K05 CONTACTOR CONTROLS SHALL BE CONNECTED TO KITCHEN EXHAUST HOOD/ANSUL SYSTEM. WHEN THE ANSUL SYSTEM IS ACTIVATED, CONTACTORS SHALL OPEN, INTERRUPTING POWER TO CONNECTED KITCHEN EQUIPMENT. CONTACTORS SHALL REQUIRE MANUAL RESET AFTER FIRE SUPPRESSION EVENT IS CLEARED.

K06 CONNECT GAS SOLENOID VALVE VIA CONTACTOR FOR ANSUL SYSTEM HOOD SHUTDOWN. SOLENOID LOCATED IN MECHANICAL ROOM 113A. SEE SHEET 4/P142.

K07 J-BOX STUB DOWN FROM ABOVE AND CONNECT TO HOOD LIGHTS. EXHAUST AND MAKE UP AIR FANS MUST BE INTERLOCKED TO SWITCH.

K08 WALL MOUNTED AIR CURTAIN CONTROLLED VIA DOOR MICRO SWITCH. SEE FOOD SERVICE DRAWINGS FOR ADDITIONAL INFORMATION.

K09 J-BOX LOCATED 12" ABOVE CEILING FOR FIRE SUPPRESSION SYSTEM. SEE FOOD SERVICE DRAWINGS FOR ADDITIONAL INFORMATION.

K10 DISPOSER CONTROL PANEL PROVIDED BY FOOD SERVICE. SEE FOOD SERVICE DRAWINGS FOR ADDITIONAL INFORMATION.

K11 ALL ELECTRICAL TO STUB INTO FLOOR BOXES "BUMPED UP" 3/8" MAXIMUM AT 2:1 SLOPE TO PROTECT FROM WATER.

K12 COORDINATE OVERHEAD CORD REEL / CORD DROP AND ELEVATION WITH FOOD SERVICE VENDOR. SEE FOOD SERVICE DRAWINGS FOR ADDITIONAL INFORMATION.

GENERAL NOTES

1. (E) AND/OR SOLID HALFTONE LINES INDICATE EXISTING EQUIPMENT, (R) AND/OR DASHED LINES INDICATE RELOCATED EQUIPMENT, (N) AND/OR SOLID LINES INDICATE NEW EQUIPMENT UNLESS NOTED OTHERWISE.
2. CONTRACTOR SHALL COORDINATE FINAL RECEPTACLE LOCATIONS WITH TELECOM OUTLETS PRIOR TO ROUGH-IN. EACH TELECOM OUTLET SHALL HAVE A RECEPTACLE LOCATED WITHIN 12", MEASURED FROM CENTER OF DEVICES.
3. MODULAR FURNITURE: ELECTRICAL CONTRACTOR RESPONSIBLE FOR ON-SITE COORDINATION WITH FURNITURE SUPPLIER TO VERIFY FINAL WIRING REQUIREMENTS, CIRCUITING, J-BOX LOCATIONS, ETC. PRIOR TO ROUGH-IN. ELECTRICAL CONTRACTOR TO PROVIDE ALL HARDWARE AND ACCESSORIES NECESSARY FOR A COMPLETE INSTALLATION. FURNITURE SUPPLIER TO PROVIDE POWER WHIPS, ELECTRICAL CONTRACTOR TO MAKE FINAL CONNECTIONS TO FURNITURE. DESIGN INTENT OF THESE DRAWINGS ASSUMES 3-CIRCUIT, 8-WIRE MODULAR FURNITURE SYSTEM (3H, 3N, G, DED, G). NO MORE THAN SIX (6) WORKSTATIONS PER EACH 3-CIRCUIT GROUP, UNLESS NOTED OTHERWISE.
4. COORDINATE EXACT MOUNTING HEIGHTS AND LOCATIONS OF GENERAL RECEPTACLES, SPECIAL OUTLETS AND DISCONNECT SWITCHES IN SHOP AREAS WITH OWNER AND EQUIPMENT SUPPLIERS PRIOR TO ROUGH-IN.
5. CONDUITS FOR ROOF-MOUNTED DEVICES AND EQUIPMENT SHALL BE RUN BELOW ROOF DECK/SYSTEM. ROOF MOUNTED CONDUITS WILL ONLY BE CONSIDERED AND APPROVED IN WRITING BY THE ARCHITECT/ENGINEER.
6. VERIFY EXACT ELECTRICAL REQUIREMENTS, PLUG CONFIGURATIONS, ETC., AND FINAL LOCATIONS OF OWNER-PROVIDED EQUIPMENT WITH OWNER'S REPRESENTATIVE PRIOR TO ORDERING OF MATERIALS AND ROUGH-IN.

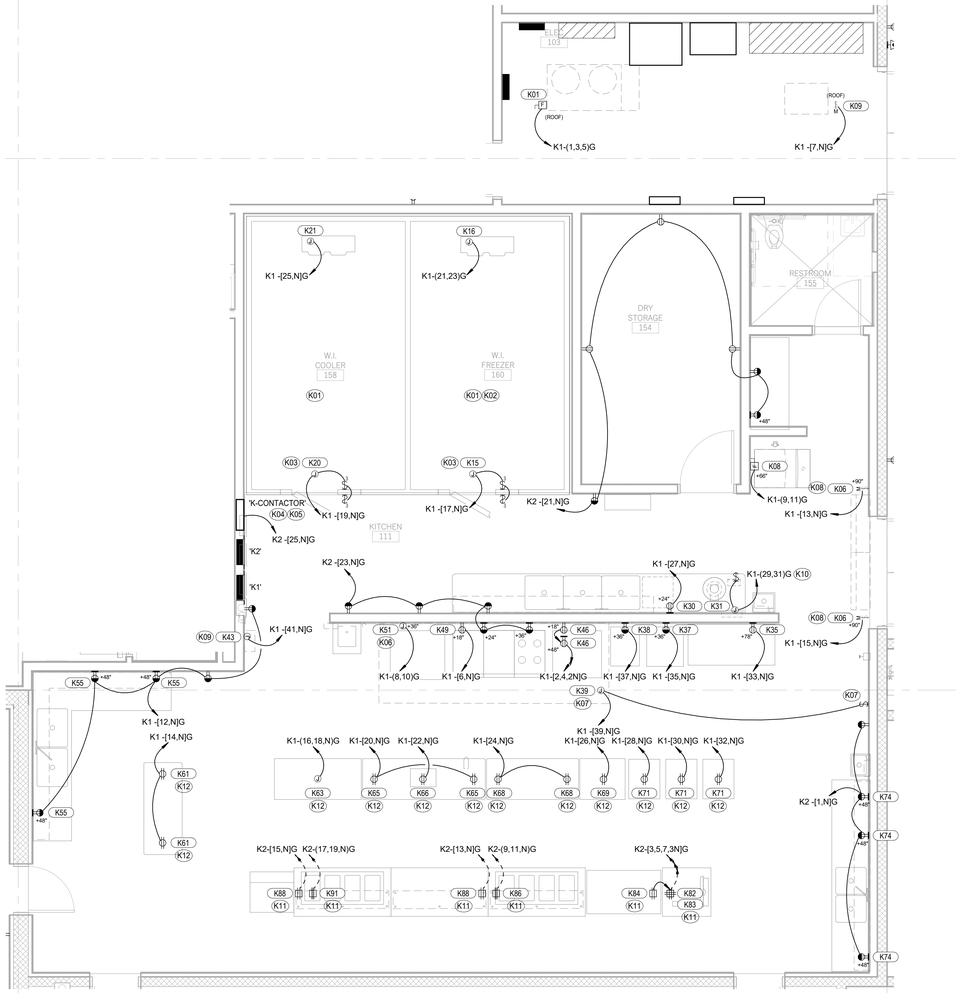

1 E6.01 ENLARGED KITCHEN POWER PLAN - BASE BID

Scale: 1/4" = 1'-0"

tsk
225 South Arlington Avenue
Reno NV, 89501
phone: 775.857.2949
fax: 775.857.2403
www.tska.com

THESE DRAWINGS AND SPECIFICATIONS ARE THE PROPERTY OF TATE SNYDER KIMSEY ARCHITECTS AND MAY NOT BE REPRODUCED OR USED FOR ANY PURPOSE WITHOUT THE ARCHITECTS WRITTEN CONSENT. AS INSTRUMENTS OF SERVICE, THESE DOCUMENTS ARE NOT FINAL AND READY FOR USE, AND THEREFORE NOT VALID, UNLESS THEY ARE SEALED, SIGNED AND DATED.

Copyright, Ltd 2023

Consultant

PK Electrical, Inc.
Engineering Design Consulting
681 Sierra Rose Drive, Suite B | Reno, NV 89511 | 775.826.9010
4601 DTC Boulevard, Suite 740 | Denver, CO 80237 | 720.481.3290
pkelectrical.com

PLEASE RECYCLE

Project

CITY OF FERNLEY CRRC

Job No: 21-058.00

Owner

CITY OF FERNLEY

50% CONSTRUCTION DOCUMENTS

REVISIONS		
REV	DATE	DESCRIPTION

Sheet Title

KITCHEN POWER PLAN - BASE BID

Date: MARCH 21, 2023

Sheet No:

E6.01

DRAWING SCHEDULE

SHEET	DESCRIPTION	
T0.01	TELECOM GENERAL NOTES, LEGEND, AND DRAWING SCHEDULE	●
T0.02	TELECOM DETAILS	●
T0.03	TELECOM ONELINE DIAGRAMS	●
T0.04	ENLARGED TELECOM ROOM PLANS	●
T0.05	SECURITY INTRUSION DETECTION SYSTEM DETAILS	●
T0.06	SECURITY VIDEO SURVEILLANCE CAMERA DETAILS	●
T1.01	TELECOM SITE PLAN	●
T2.01	TELECOM PLAN - BASE BID	●
T2.01A	TELECOM PLAN - ALT A	●
T2.01B	TELECOM PLAN - ALT B	●
	TOTAL SHEETS IN ISSUE:	10

TELECOM GENERAL NOTES

ITEM	DESCRIPTION
27.1	STANDARDS AND CODES: ALL TELECOMMUNICATIONS (TELECOM), AUDIO-VISUAL (AV) AND ELECTRONIC SAFETY AND SECURITY (ESS) WORK SHALL BE INSTALLED IN ACCORDANCE WITH THE NATIONAL ELECTRIC CODE (NEC), ANSI/TIA STANDARDS AND ANSI/INFOCOMM STANDARDS REFERENCED IN THE DIVISION 27 AND DIVISION 28 SPECIFICATIONS.
27.2	GENERAL REQUIREMENTS: INCLUDE ALL LABOR, MATERIALS, EQUIPMENT, TOOLS, TRANSPORTATION, STORAGE COSTS, EXCAVATION, TRAINING, INSURANCE, TEMPORARY PROTECTION, PERMITS, INSPECTIONS, TAXES AND ALL NECESSARY AND RELATED ITEMS REQUIRED TO PROVIDE A COMPLETE AND OPERATIONAL TELECOM SYSTEM, AUDIO/VISUAL SYSTEM AND SECURITY SYSTEM AS SHOWN ON THE CONTRACT DRAWINGS AND DESCRIBED IN THE SPECIFICATIONS. THE DIVISION 26 ELECTRICAL CONTRACTOR, DIVISION 27 TELECOM CONTRACTOR AND DIVISION 28 SECURITY CONTRACTOR ARE RESPONSIBLE FOR THE WORK SHOWN ON THE TELECOM DRAWINGS AND DESCRIBED IN THE DIVISION 27 & 28 SPECIFICATIONS. INFORMATION SHOWN ON THE TELECOM DRAWINGS IS DIAGRAMMATIC. FIELD VERIFY ALL DIMENSIONS, LOCATIONS, AND LAYOUT. REVIEW ALL ARCHITECTURAL, STRUCTURAL, CIVIL, MECHANICAL AND SPECIALTY SYSTEMS DRAWINGS AND ADJUST ALL WORK TO MEET THE REQUIREMENTS OR CONDITIONS SHOWN THEREON. DO NOT SCALE THE TELECOM PLANS FOR RACEWAY, OUTLET, RACK OR EQUIPMENT LOCATIONS.
27.3	RACEWAY: THE DIVISION 26 ELECTRICAL CONTRACTOR IS RESPONSIBLE FOR THE INSTALLATION, SUPPORT AND SEISMIC BRACING OF ALL RACEWAY SHOWN ON THE TELECOM DRAWINGS AND DESCRIBED IN THE DIVISION 27 & 28 SPECIFICATIONS. THIS INCLUDES BUT IS NOT LIMITED TO ALL WIRE BASKET TRAY, CONDUIT, OUTLET BOXES, PULL BOXES, PULL STRING, SLEEVES. WHERE RACEWAY IS SHOWN ON THE TELECOM DRAWINGS BUT NOT SPECIFIED IN THE DIVISION 27 AND 28 SPECIFICATIONS, THE RACEWAY WILL BE INSTALLED IN ACCORDANCE WITH THE REQUIREMENTS OF THE DIVISION 26 SPECIFICATIONS. THE DIVISION 26 ELECTRICAL CONTRACTOR SHALL INSTALL WALL OR CEILING MOUNTED OUTLET BOXES AT ALL TELECOM OUTLETS AND WILL INSTALL AN 1" EMT CONDUIT (UON) FROM THE OUTLET BOX TO AN ACCESSIBLE CEILING SPACE. THE DIVISION 27 CONTRACTOR SHALL INSTALL J-HOOKS FROM THIS POINT TO THE TELECOM ROOM. WHERE NO ACCESSIBLE CEILING SPACE EXISTS OR IN AREAS WITHOUT CEILINGS, THE ELECTRICAL CONTRACTOR SHALL INSTALL CONDUIT FROM THE OUTLET BOX TO THE TELECOM ROOM NO EXPOSED TELECOM OR A/V CABLING IS PERMITTED WITH THE EXCEPTION OF CABLING ROUTED WITHIN THE TELECOM ROOM. ALL CABLING MUST BE CONCEALED ABOVE ACCESSIBLE CEILINGS OR ROUTED IN CONDUIT. THE DIVISION 26 ELECTRICAL CONTRACTOR SHALL INSTALL CONDUIT FOR ROUTING OF HORIZONTAL TELECOM CABLING ROUTED IN INACCESSIBLE CEILING OR WALL SPACES. CONDUIT SHALL BE SIZED SO AS NOT TO EXCEED 40% FILL RATE. ALL RACEWAY SHALL BE RUN PERPENDICULAR TO BUILDING GRID LINES. TELECOM RACEWAY SHALL BE INSTALLED SO THAT THE FOLLOWING MINIMUM CLEAR DISTANCES ARE MAINTAINED FROM SOURCES OF ELECTRO-MAGNETIC INTERFERENCE (EMI). 6" CLEAR FROM POWER CABLES, 12" CLEAR FROM FLUORESCENT LIGHTING AND 36" CLEAR FROM TRANSFORMERS AND MOTORS. THE DIVISION 26 ELECTRICAL CONTRACTOR IS RESPONSIBLE FOR FURNISHING ALL ACCESS DOORS REQUIRED TO PROVIDE REASONABLE ACCESS FOR THE INSTALLATION OF TELECOM CABLING.
27.4	FIRESTOPPING: ALL PENETRATIONS THROUGH FIRE RATED OR ACOUSTICAL WALLS MUST BE FIRE STOPPED WITH A UL LISTED FIRE STOP ASSEMBLY. ALL FIRE STOPPING ASSEMBLIES SHALL SHALL MEET OR EXCEED THE RATING OF THE WALL OR FLOOR BEING PENETRATED. THE DIVISION 26 ELECTRICAL CONTRACTOR IS RESPONSIBLE FOR INSTALLATION OF FIRESTOPPING BETWEEN ALL TELECOM RACEWAYS AND THE BUILDING STRUCTURE. THE DIVISION 27 TELECOM CONTRACTOR IS RESPONSIBLE FOR INSTALLATION OF FIRESTOPPING BETWEEN THE TELECOM CABLING AND THE TELECOM RACEWAY.
27.5	STRUCTURED CABLING: THE DIVISION 27 TELECOM CONTRACTOR IS RESPONSIBLE FOR INSTALLING ALL REMAINING WORK SHOWN ON THE TELECOM DRAWINGS OR DESCRIBED IN THE DIVISION 27 SPECIFICATIONS. THIS INCLUDES BUT IS NOT LIMITED TO HORIZONTAL VOICE & DATA CABLING, TELECOM OUTLET FACEPLATES, TELECOM OUTLET JACKS, DATA PATCH PANELS, VOICE TERMINATION BLOCKS, RACKS, RACK MOUNTED CABLE MANAGEMENT DEVICES, VELCRO CABLE TIES, D-RINGS, PATCH CORDS, STATION CORDS, CROSS CONNECT WIRE, LABELING, CABLE TESTING AND CERTIFICATION, ETC.
27.6	CABLING AND TERMINATIONS: ALL PREMISE HORIZONTAL DATA AND VOICE CABLING, PATCH CORDS AND WORKSTATION CORDS SHALL BE CATEGORY 6 UNSHIELDED TWISTED PAIR. ALL PATCH PANELS AND OUTLET JACKS SHALL BE CATEGORY 6. HORIZONTAL CAT 6 DATA AND VOICE CABLING SHALL HAVE A PLENUM RATED (CMP) JACKET (JACKET COLOR BLUE). NO SPLICES WILL BE PERMITTED IN ANY TELECOM CABLING UNLESS EXPLICITLY SHOWN ON THE DRAWINGS. THE MAXIMUM CABLE LENGTH BETWEEN THE WORK AREA OUTLET AND THE TERMINATION IN THE TELECOM ROOM SHALL BE 295 FEET. NOTIFY THE ENGINEER OF HORIZONTAL CABLES LONGER THAN 295 FEET PRIOR TO INSTALLATION. PROVIDE SLACK IN CABLES AT ENTRANCES AND EXITS OF CONDUIT SLEEVES AND AT TRANSITIONS FROM HORIZONTAL TO VERTICAL CABLE LADDERS AND CABLE TRAYS. PROVIDE A MINIMUM 10'-0" MAINTENANCE LOOP IN THE TELECOM ROOMS FOR ALL HORIZONTAL CABLING TO ALLOW MINOR RELOCATION OF THE TELECOM RACKS. TELECOM CABLING SHALL BE INSTALLED IN A NEAT AND WORKMANLIKE MANNER. ALL CABLES SHALL BE NEATLY BUNDLED AND DRESSED IN THE TELECOM ROOMS. LOOSELY BUNDLE HORIZONTAL CABLE WITH VELCRO TIE WRAPS AT 1'-0" CENTERS INSIDE THE TELECOM ROOMS AND AT 2'-0" CENTERS OUTSIDE THE TELECOM ROOM. DO NOT EXCEED QTY (24) CABLES PER BUNDLE.
27.7	TESTING AND CERTIFICATION: ALL DATA, VOICE AND A/V CABLING SHALL BE TESTED AND CERTIFIED IN ACCORDANCE WITH THE DIVISION 27 SPECIFICATIONS. CERTIFIED TEST REPORTS SHALL BE SUBMITTED FOR APPROVAL AT THE COMPLETION OF THE PROJECT.
27.8	SUPERVISION: ALL WORK SHALL BE SUPERVISED ON A DAILY BASIS BY A BICSI CERTIFIED SUPERVISOR HAVING A MINIMUM OF THREE (3) YEARS EXPERIENCE IN THE INSTALLATION OF STRUCTURED CABLING AND TELECOMMUNICATION SYSTEMS.
27.9	AS-BUILT DRAWINGS: PRIOR TO FINAL ACCEPTANCE, THE CONTRACTOR SHALL PROVIDE ONE SET OF AS-BUILT TELECOM DRAWINGS IN PDF FORMAT INDICATING THE FOLLOWING ADDITIONAL INFORMATION: EXACT ROUTING OF J-HOOKS AND ALL RACEWAY LARGER THAN 2", QTY AND LAYOUT OF ALL TELECOM OUTLETS, QUANTITY OF TELECOM DROPS AT EACH OUTLET, CONTRACTORS NAME, ADDRESS AND TELEPHONE PHONE NUMBER. RECORD NOTATIONS SHALL BE CLEARLY DRAWN WITH A DRAFTING APPEARANCE EQUAL TO THE ORIGINAL DRAWINGS.
27.10	EXAMINATION OF SITE: BEFORE SUBMITTING A PROPOSAL, THE CONTRACTOR SHALL EXAMINE THE SITE AND BECOME FAMILIAR WITH THE EXISTING CONDITIONS AND LIMITATIONS. NO EXTRAS WILL BE ALLOWED BECAUSE OF THE CONTRACTOR'S MISUNDERSTANDING OF THE AMOUNT OF WORK INVOLVED OR LACK OF KNOWLEDGE OF ANY SITE CONDITIONS WHICH MAY AFFECT THE WORK. ANY APPARENT VARIANCE OF THE DRAWINGS OR SPECIFICATIONS FROM THE EXISTING CONDITIONS AT THE SITE SHALL BE CALLED TO THE ATTENTION OF THE ENGINEER BEFORE SUBMITTING A PROPOSAL.
27.11	GUARANTEE: THE CATEGORY 6 STRUCTURED CABLING SYSTEM INCLUDING HORIZONTAL CABLING, PATCH PANELS, PATCH CORDS AND TELECOM OUTLET JACKS SHALL CARRY A MINIMUM TWENTY (20) YEAR MANUFACTURER WARRANTY FROM BELDEN/CDT. THE COMPLETE TELECOM SYSTEM AND ALL PORTIONS THEREOF, SHALL BE GUARANTEED TO BE FREE FROM DEFECTS IN WORKMANSHIP AND MATERIALS FOR A MINIMUM PERIOD OF ONE (1) YEAR FROM DATE OF FINAL ACCEPTANCE. PROMPTLY REMEDY SUCH DEFECTS AND ANY SUBSEQUENT DAMAGE CAUSED BY THE DEFECTS OR REPAIR THEREOF AT NO EXPENSE TO THE OWNER. SEE THE DIVISION 27 SPECS FOR ADDITIONAL WARRANTY AND/OR EXTENDED WARRANTY REQUIREMENTS.
27.12	SUBSTANTIAL COMPLETION: THE FOLLOWING ARE PREREQUISITES FOR SUBSTANTIAL COMPLETION OF THE TELECOM SYSTEM: ALL WORK COMPLETED IN ACCORDANCE WITH THE CONTRACT DOCUMENTS, PUNCH LIST ITEMS COMPLETED AND SIGNED OFF, CERTIFIED CABLE TEST REPORTS SUBMITTED AND APPROVED, AS-BUILT DRWGS AND TERMINATION SCHEDULES SUBMITTED AND APPROVED, MFG'S WARRANTY AND CONTRACTOR'S GUARANTEE SUBMITTED, EXTRA STOCK ITEMS TURNED OVER TO THE OWNER.

RACEWAY LEGEND

SYMBOL	DESCRIPTION
	CONDUIT. SIZE AS INDICATED ON DRAWINGS
	CONDUIT UNDERGROUND OR IN SLAB
	CONDUIT STUB OUT WITH BUSHING.
	HORIZONTAL OR VERTICAL SLEEVE WITH BUSHINGS.
	CONDUIT UP OR DOWN.
J J	J-HOOKS (WHERE SPECIFIC ROUTING REQUIRED)
	CABLE TRAY OR LADDER RACK. SIZE INDICATED ON DWGS
	WIRE BASKET TRAY. SIZE INDICATED ON DRWGS. SEE 5/T0.2.
	VERTICAL LADDER RACK.
	CONDUIT OR SLEEVE STUB UP.

EQUIPMENT & CABLING LEGEND

SYMBOL	DESCRIPTION
	TELECOM 4-POST EQUIP RACK W/ VERTICAL CABLE MANAGERS.
	RACK, WIRING BLOCK OR EQUIPMENT GROUND.
PBB	2" X 12" X 1/4" TELECOM PRIMARY BONDING BUSBAR (SEE 4/T0.2).
RING	24" DIAMETER STEEL WALL MOUNTED CABLE SLACK STORAGE RING WITH RECLOSEABLE VELCRO FASTENERS.

TELECOM LEGEND

SYMBOL	DESCRIPTION
2D	DATA OUTLET: 4 11/16" X 4 11/16" X 2 1/8" DEEP BOX +18" AFF (UON) WITH SINGLE GANG RING AND 1" CONDUIT TO TELECOM CABINET. PROVIDE 4-PORT FACEPLATE WITH QTY (2) PLENUM RATED CAT 6 DATA DROP (JACKET COLOR WHITE) TERMINATED ON CAT 6 JACKS (JACK COLOR WHITE). SEE PLANS FOR QUANTITY OF DATA DROPS AT EACH OUTLET. SEE 1.2/T0.02 FOR ADDITIONAL REQUIREMENTS.
1D WAP	WALL MOUNTED DATA OUTLET FOR WIRELESS ACCESS POINT: 4 11/16" X 4 11/16" X 2 1/8" DEEP BOX WITH SINGLE GANG RING AND 1" CONDUIT TO TELECOM CABINET (SEE PLANS FOR MOUNTING HEIGHT). PROVIDE 1-PORT FACEPLATE WITH QTY (1) PLENUM RATED CAT 6 DATA DROP (JACKET COLOR WHITE) TERMINATED ON CAT 6 JACK (JACK COLOR WHITE).
1D WAP	CEILING MOUNTED DATA OUTLET FOR WIRELESS ACCESS POINT: 4 11/16" X 4 11/16" X 2 1/8" DEEP BOX SECURED TO CEILING WITH SINGLE GANG RING AND 1" CONDUIT TO TELECOM CABINET. PROVIDE 1-PORT FACEPLATE WITH QTY (1) PLENUM RATED CAT 6 DATA DROP (JACKET COLOR WHITE) TERMINATED ON CAT 6 JACK (JACK COLOR WHITE).

ACCESS CONTROL SYSTEM LEGEND

SYMBOL	DESCRIPTION
ACP	ACCESS CONTROL PANEL AND POWER SUPPLY CABINET WALL MOUNTED IN MDF ROOM (SEE T0.05).
CR	CONTACTLESS SMART CARD READER.
ES	ELECTRIC STRIKE (SEE ARCHITECTURAL DOOR HARDWARE SCHED).
RX	REQUEST TO EXIT MOTION DETECTOR.
C	MAGNETIC DOOR POSITION CONTACTS.
PS	120VAC TO 24VDC POWER SUPPLY (SEE ARCHITECTURAL DOOR HARDWARE SCHED).
PT	POWER TRANSFER HINGE (SEE ARCHITECTURAL DOOR HARDWARE SCHEDULE).
LA	PANIC BAR WITH LOCAL ALARM.
ML	MAGNETIC LOCK.
PB	PUSH BUTTON DOOR RELEASE.
DS	VIDEO INTERCOM DOOR STATION.
VI	VIDEO INTERCOM MASTER STATION.

INTRUSION DETECTION LEGEND

SYMBOL	DESCRIPTION
IDCP	INTRUSION DETECTION CONTROL PANEL WITH ADDRESSABLE EXPANSION MODULE, RELAY OUTPUT MODULE, LOCKABLE ENCLOSURE, DIALER, POWER SUPPLIES, BATTERIES AND BATTERY CHARGERS TO ACCOMMODATE ALL DEVICES AND ZONES SHOWN ON THE DRAWINGS (SEE 1/T-0.7). PROVIDE QTY (2) CAT 6 DROPS TO PANEL.
KP	ALPHA KEYPAD / ANNUNCIATOR.
C	MAGNETIC DOOR POSITION CONTACT WITH ADDRESSABLE MODULE. NOTE - CONTACTS ON DOORS WITH ACCESS CONTROL PROVIDED AND INSTALLED BY ACCESS CONTROL CONTRACTOR AND CONNECTED TO INTRUSION SYSTEM BY INTRUSION DETECTION SYSTEM CONTRACTOR VIA ADDRESSABLE MODULE.
MD	PIR MOTION DETECTION SENSOR WITH ADDRESSABLE MODULE.

GYM SOUND SYSTEM LEGEND

SYMBOL	DESCRIPTION
S6	2-WAY 10-INCH 200 WATT 70V LOUDSPEAKER.
M	WALL MOUNTED DUAL XLR MICROPHONE INPUT PLATE. PROVIDE SINGLE GANG STAINLESS STEEL DECORA COVER PLATE.
AV	35RU WALL MOUNTED LOCKABLE SOUND SYSTEM EQUIPMENT CABINET WITH PERFORATED FRONT DOOR. SEE AV0.2 FOR RACK MOUNTED EQUIPMENT REQUIREMENTS.
TP	7" DIAGONAL WIRELESS TOUCH SCREEN CONTROLLER.
DSP	8-INPUT X 8-OUTPUT X 8-FLEX I/O DIGITAL SIGNAL PROCESSOR.
AMP	4-CHANNEL 4 x 400 WATT AMPLIFIER.
WR	2-CHANNEL UHF WIRELESS RECEIVER.
MP	MEDIA PLAYER.
ALS	ASSISTED LISTENING SYSTEM.

ABBREVIATIONS

AFF	ABOVE FINISH FLOOR
AV	AUDIO / VISUAL
AWG	AMERICAN WIRE GAUGE
CATV	CABLE TV
COAX	COAXIAL CABLE
DEMARC	DEMARCATION POINT
DIA	DIAMETER
FBO	FURNISHED BY OTHERS
(E)	EXISTING
EA	EACH
EMT	ELECTRICAL METALLIC TUBING
EQ	EQUAL
FBO	FURNISHED BY OTHERS
FPD	FLAT PANEL DISPLAY
GND	GROUND
HC	HORIZONTAL CROSS-CONNECT
IC	INTERMEDIATE CROSS-CONNECT
ID	INSIDE DIAMETER
IDC	INSULATION DISPLACEMENT CONNECTOR
IDF	INTERMEDIATE DISTRIBUTION FRAME
LAN	LOCAL AREA NETWORK
MC	MAIN CROSS-CONNECT
MDF	MAIN DISTRIBUTION FRAME
MM	MULTIMODE FIBER OPTIC CABLE
NTS	NOT TO SCALE
OC	ON CENTER
OD	OUTSIDE DIAMETER
OFE	OWNER FURNISHED EQUIPMENT
OSP	OUTSIDE PLANT
PVC	POLYVINYLCHLORIDE
SM	SINGLEMODE FIBER OPTIC CABLE
TBB	TELCOMMUNICATIONS BONDING BACKBONE
TR	TELECOMMUNICATIONS ROOM
TGB	TELECOMMUNICATIONS GROUNDING BUSBAR
TIA	TELECOMMUNICATIONS INDUSTRY ASSOCIATION
TMGB	TELECOMMUNICATIONS MAIN GROUNDING BUSBAR
TYP	TYPICAL
UON	UNLESS OTHERWISE NOTED
UPS	UNINTERRUPTIBLE POWER SUPPLY
UTP	UNSHIELDED TWISTED PAIR
WAP	WIRELESS ACCESS POINT
WG	WIRE GUARD
WP	WALL PHONE

VIDEO SURVEILLANCE LEGEND

SYMBOL	DESCRIPTION
	FIXED CCTV CAMERA: INSTALL QTY (1) PLENUM CAT 6 DROP TERMINATED ON "REVCONNECT" FIELD MOUNT PLUG (SEE T0.06 FOR CAMERA AND CABLING REQUIREMENTS).
	MULTI-SENSOR CCTV CAMERA: INSTALL QTY (1) PLENUM CAT 6 DROP TERMINATED ON "REVCONNECT" FIELD MOUNT PLUG (SEE T0.06 FOR CAMERA AND CABLING REQUIREMENTS).
NVR	NETWORK VIDEO RECORDER RACK MOUNTED IN TELECOM ROOM.

PUBLIC ADDRESS SYSTEM LEGEND

SYMBOL	DESCRIPTION
S1	FLUSH CEILING MOUNTED 2-WAY 30 WATT 70V PA SPEAKER. PROVIDE 16/2 SPEAKER CABLE ROUTED IN CONDUIT BETWEEN SPEAKERS AND HOMERUN TO AMPLIFIER.
S2	FLUSH CEILING MOUNTED 2-WAY 60 WATT 70V PA SPEAKER. PROVIDE 16/2 SPEAKER CABLE ROUTED IN CONDUIT BETWEEN SPEAKERS AND HOMERUN TO AMPLIFIER.
S3	FLUSH GYPBOARD CEILING MOUNTED 5 WATT 70V PA SPEAKER WITH WHITE GRILLE AND VOLUME CONTROL. PROVIDE 16/2 SPEAKER CABLE ROUTED IN CONDUIT BETWEEN SPEAKERS AND HOMERUN TO AMPLIFIER.
AMP	4-CHANNEL 100 WATT PER CHANNEL 70V PUBLIC ADDRESS AMPLIFIER. INTERFACE AMPLIFIER WITH FIRE ALARM SYSTEM TO MUTE SPEAKERS WHEN FIRE ALARM ACTIVATED.

tsk
225 South Arlington Avenue
Reno NV, 89501
phone: 775.857.2949
fax: 775.857.2403
www.tska.com

THESE DRAWINGS AND SPECIFICATIONS ARE THE PROPERTY OF TATE SNYDER KIMSEY ARCHITECTS AND MAY NOT BE REPRODUCED OR USED FOR ANY PURPOSE WITHOUT THE ARCHITECTS WRITTEN CONSENT. AS INSTRUMENTS OF SERVICE, THESE DOCUMENTS ARE NOT FINAL AND READY FOR USE, AND THEREFORE NOT VALID, UNLESS THEY ARE SEALED, SIGNED AND DATED.
Copyright, Ltd 2023

Consultant

PK Electrical, Inc.
Engineering Design Consulting
681 Sierra Rose Drive, Suite B | Reno, NV 89511 | 775.826.9010
4601 DTC Boulevard, Suite 740 | Denver, CO 80237 | 720.481.3290
pkelectrical.com

PLEASE RECYCLE

Project
CITY OF FERNLEY CRRC

Job No: 21-058.00

Owner
CITY OF FERNLEY

50% CONSTRUCTION DOCUMENTS

REVISIONS		
REV	DATE	DESCRIPTION

Sheet Title
TELECOM GENERAL NOTES, LEGEND, AND DRAWING SCHEDULE

Date: MARCH 21, 2023

Sheet No:
T0.01

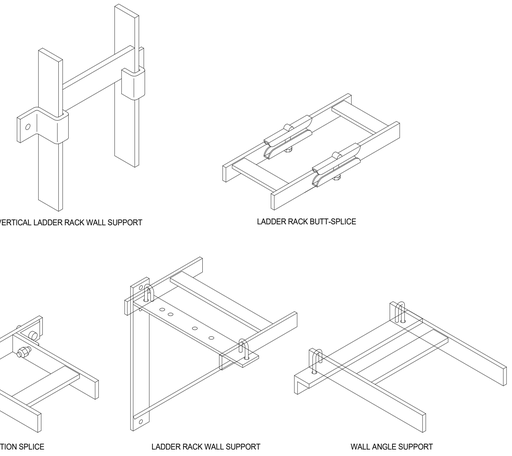

8 T0.02 TELECOM ROOM LADDER RACK DETAILS

SCALE: NONE

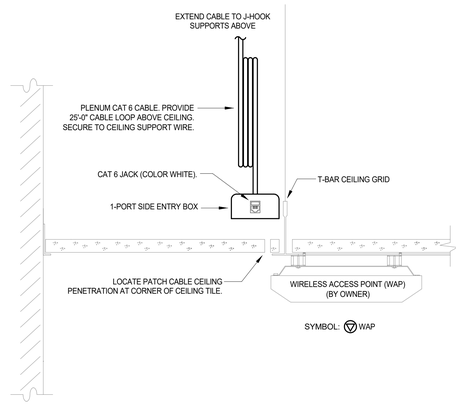

7 T0.02 CEILING MOUNTED WIRELESS ACCESS POINT (WAP)

SCALE: NONE

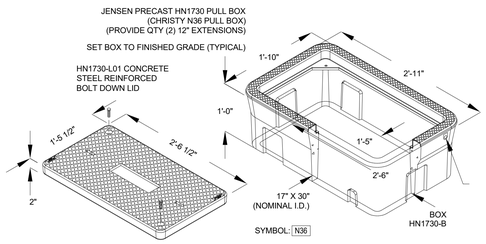

PART NO.	PRODUCT	DESCRIPTION	QTY	WEIGHT
HN1730-B	BOX	17"x30"x12" Reinforced Concrete Non-Traffic Box	1	175
HN1730-E	EXTENSION	17"x30"x12" Reinforced Concrete Extension	2	180
HN1730-L01	LID	Concrete Steel Reinforced Bolt Down Lid	1	86

6 T0.02 (17" W X 30" L) TELECOM PULLBOX

SCALE: NONE

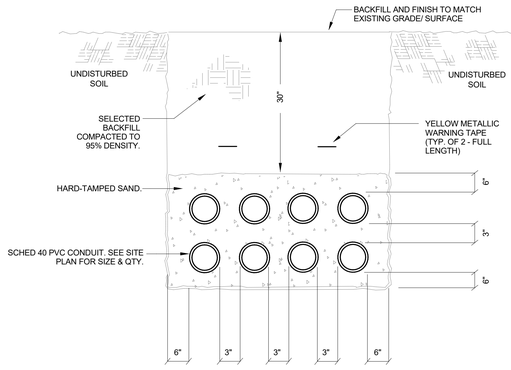

5 T0.02 TELECOM DUCT BANK DETAILS

SCALE: NONE

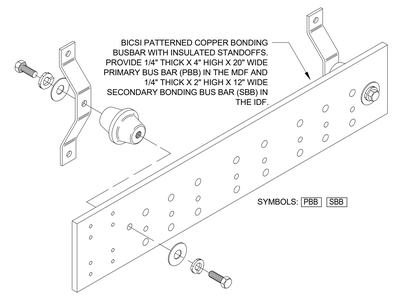

4 T0.02 TELECOM ROOM GROUNDING BAR

SCALE: NONE

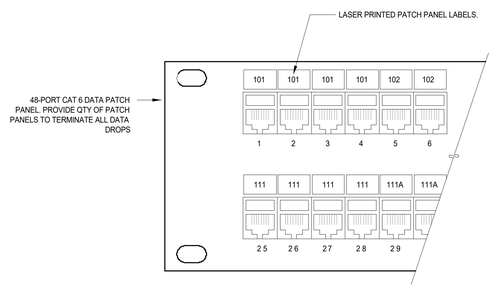

3 T0.02 48 PORT CAT 6 PATCH PANEL

SCALE: NONE

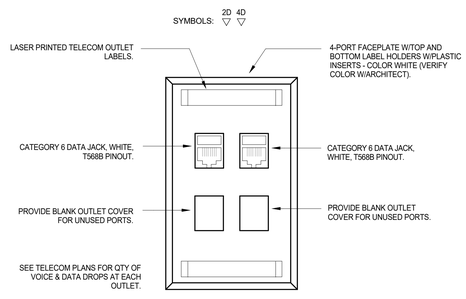

2 T0.02 TELECOM OUTLET

SCALE: NONE

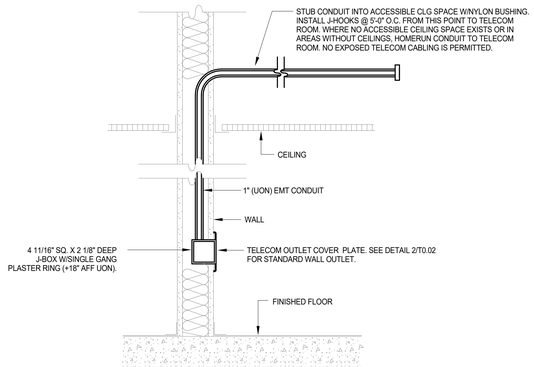

1 T0.02 TELECOM OUTLET BOX ROUGHIN

SCALE: NONE

tsk
225 South Arlington Avenue
Reno NV, 89501
phone: 775.857.2949
fax: 775.857.2403
www.tska.com

THESE DRAWINGS AND SPECIFICATIONS ARE THE PROPERTY OF TATE SNYDER KIMSEY ARCHITECTS AND MAY NOT BE REPRODUCED OR USED FOR ANY PURPOSE WITHOUT THE ARCHITECTS WRITTEN CONSENT. AS INSTRUMENTS OF SERVICE, THESE DOCUMENTS ARE NOT FINAL AND READY FOR USE, AND THEREFORE NOT VALID, UNLESS THEY ARE SEALED, SIGNED AND DATED.

Copyright, Ltd 2023

Consultant

PK Electrical, Inc.
Engineering Design Consulting
681 Sierra Rose Drive, Suite B | Reno, NV 89511 | 775.826.9010
4601 DTC Boulevard, Suite 740 | Denver, CO 80237 | 720.481.3290
pkelectrical.com

PLEASE RECYCLE

Project
CITY OF FERNLEY CRRC

Job No: 21-058.00

Owner
CITY OF FERNLEY

50% CONSTRUCTION DOCUMENTS

REVISIONS		
REV	DATE	DESCRIPTION

Sheet Title
TELECOM DETAILS

Date: MARCH 21, 2023

Sheet No:
T0.02

FIBER ONELINE SHEET NOTES

1. 1RU FIBER TERMINATION CABINET WITH 12-FIBER FUSION SPLICE CASSETTE WITH DUPLEX LC CONNECTORS.
2. 12-STRAND SINGLEMODE FIBER ROUTED IN 2" CONDUIT FROM MDF ROOM TO IDF ROOM.

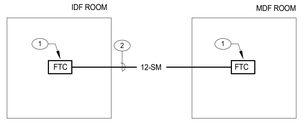

2 T0.03 FIBER ONELINE DIAGRAM

SCALE: NONE

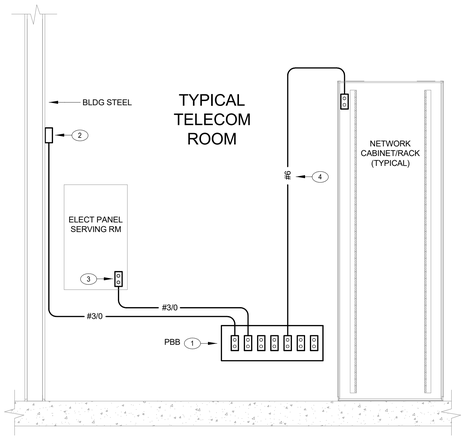

1 T0.03 TELECOM ROOM GROUNDING DIAGRAM

SCALE: NONE

TELECOM GROUNDING GENERAL NOTES

1. ALL BONDING AND GROUNDING WORK TO COMPLY WITH THE REQUIREMENTS OF ANSI/TIA-607-D (COMMERCIAL BUILDING GROUNDING (EARTHING) AND BONDING REQUIREMENTS FOR TELECOMMUNICATIONS).
2. ATTACH GROUNDING CONDUCTORS TO TELECOM BUS BARS WITH 2 HOLE LONG BARREL COMPRESSION LUGS.

TELECOM GROUNDING SHEET NOTES

1. UL LISTED BICSI PATTERNED COPPER TELECOM ROOM GROUND BAR W/INSULATED STAND OFFS (SEE 4/T0.2).
2. #3/0 AWG GREEN INSULATED GROUND CONDUCTOR IN 3/4" CONDUIT. CAD WELD TO STRUCT STEEL.
3. #3/0 AWG IN 3/4" CONDUIT TO BLDG GROUND IN ELECTRICAL PANEL SERVING TELECOM ROOM. BOND CONDUIT TO GROUND AT BOTH ENDS.
4. #6 GREEN INSULATED GROUND CONDUCTOR TO NETWORK EQUIPMENT RACK. INSTALL SEPARATE GROUND CONDUCTORS FOR EACH RACK (DO NOT DAISY CHAIN GROUND CONDUCTORS).

tsk

225 South Arlington Avenue
Reno NV, 89501
phone: 775.857.2949
fax: 775.857.2403
www.tska.com

THESE DRAWINGS AND SPECIFICATIONS ARE THE PROPERTY OF TATE SNYDER KIMSEY ARCHITECTS AND MAY NOT BE REPRODUCED OR USED FOR ANY PURPOSE WITHOUT THE ARCHITECTS WRITTEN CONSENT. AS INSTRUMENTS OF SERVICE, THESE DOCUMENTS ARE NOT FINAL AND READY FOR USE, AND THEREFORE NOT VALID, UNLESS THEY ARE SEALED, SIGNED AND DATED.

Copyright, Ltd 2023

Consultant

PK Electrical, Inc.
Engineering Design Consulting

681 Sierra Rose Drive, Suite B | Reno, NV 89511 | 775.826.9010
4601 DTC Boulevard, Suite 740 | Denver, CO 80237 | 720.481.3290
pkelectrical.com

PLEASE RECYCLE

Project

CITY OF FERNLEY CRRC

Job No: 21-058.00

Owner

CITY OF FERNLEY

50% CONSTRUCTION DOCUMENTS

REVISIONS		
REV	DATE	DESCRIPTION

Sheet Title

TELECOM ONELINE DIAGRAMS

Date: MARCH 21, 2023

Sheet No:

T0.03

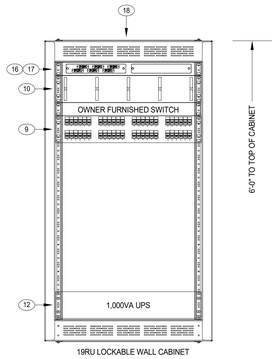

4 T0.04 IDF ROOM WALL MOUNTED TELECOM CABINET

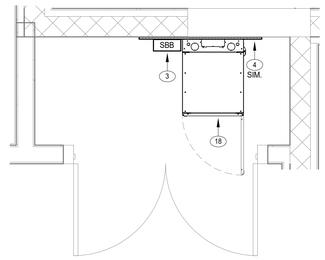

3 T0.04 ENLARGED IDF COMM ROOM PLAN

SCALE: 1/2" = 1'-0"

TELECOM ROOM AND RACK SHEET NOTES

1. UL LISTED 4-POST RACK WITH SQUARE PUNCHED EQUIPMENT MOUNTING ANGLES. BOLT RACKS TO CONCRETE WITH (4) 1/2" DIAMETER CONCRETE EXPANSION ANCHORS WITH MINIMUM 3" EMBEDMENT DEPTH. SECURE TOP OF RACKS TO OVERHEAD LADDER RACK WITH 12" HIGH CABLE RUNWAY ELEVATION KIT. INSTALL #6 GROUND WIRE FROM RACK TO GROUND BAR (PROVIDE A SEPARATE DEDICATED GROUND CONDUCTOR FOR EACH RACK - DO NO DAISY CHAIN GROUND CONDUCTORS). PROVIDE MANUFACTURER RACK GROUNDING KIT TO ENABLE GROUND LUG ATTACHMENT TO RACK. PROVIDE BASE DUST COVER WITH EACH RACK. PROVIDE QTY (50) CAGE NUTS WITH EACH RACK TO ALLOW DEVICES WITH STANDARD MOUNTING HOLES TO MOUNT IN SQUARE PUNCHED RAILS.
2. 7'-0" HIGH X 6" WIDE DOUBLE SIDED VERTICAL CABLE MANAGER WITH HINGED COVERS.
3. BICSI PATTERNED COPPER BONDING BUSBAR WITH INSULATED STANDOFFS. PROVIDE 1/4" THICK X 4" HIGH X 20" WIDE PRIMARY BUS BAR (PBB) IN THE MDF AND 1/4" THICK X 2" HIGH X 12" WIDE SECONDARY BONDING BUS BAR (SBB) IN THE IDF.
4. 3/4" FIRE TREATED AC PLYWOOD (TYPICAL ALL 4 WALLS). RUN PLYWOOD SHEETS VERTICALLY FROM 6" AFF TO 8'-6". PAINT PLYWOOD WITH 2 COATS OF WHITE PAINT. MASK FIRE TREATMENT LABELS ON PLYWOOD PRIOR TO PAINTING.
5. (2)4" PVC SCHEDULE 40 CONDUITS STUBBED UP 4" AFF AND ROUTED UNDERGROUND TO EXTISTING CHARTER PULLBOX. SEE SITE PLAN FOR ADDITIONAL CONDUIT DETAILS.
6. 4" SLEEVES THROUGH WALL FOR ROUTING OF HORIZONTAL CAT 6 CABLING. INSTALL QTY OF SLEEVES TO ACCOMMODATE ALL CABLING. DO NOT EXCEED 40% FILL. SLEEVES INSTALLED AT ABOVE CEILING HEIGHT.
7. 12" WIDE HORIZONTAL LADDER RACK AT 96" AFF. SECURE LADDER RACK TO WALL WITH MFG'S TRIANGULAR SUPPORT BRACKETS AT 4'-0" O.C. WHERE PLYWOOD DOES NOT EXIST, INSTALL SUPPORT BRACKET FASTENERS INTO METAL STUD FRAMING. SUPPORT LADDER RACK WITH THREADED ROD WHERE SPANS EXCEED 4'-0". BOND ALL SECTIONS OF LADDER RACK TOGETHER WITH BONDING JUMPERS AND BOND TO GROUND BAR W/#6 CONDUCTOR. INSTALL BUTT SPLICES BETWEEN ENDS OF HORIZONTAL LADDER RACK. USE MFG'S CORNER CLAMPS AT PERPENDICULAR INTERSECTION OF LADDER RACK. SEE B/T002 FOR ADDITIONAL DETAILS.
8. PROVIDE QTY (2) CABLE RUNWAY RADIUS DROPS ABOVE EACH VERTICAL CABLE MANAGER TO MAINTAIN CABLE BEND RADIUS. COORDINATE LAYOUT OF OVERHEAD LADDER RACK CROSS MEMBERS SO THAT RADIUS DROPS ARE LOCATED DIRECTLY ABOVE VERTICAL CABLE MANAGERS. WHERE CROSS MEMBERS CONFLICT WITH THE VERTICAL CABLE MANAGERS, CUT AND REMOVE CROSS MEMBERS AND REPLACE WITH REMOVABLE CROSS MEMBERS. WHERE RADIUS DROPS ARE CONNECTED TO REMOVABLE CROSS MEMBERS, INSTALL CUSTOM RADIUS DROPS.
9. 48-PORT CAT 6 PATCH PANEL.
10. 2RU CABLE MANAGER WITH HINGED COVER.
11. 1RU VIDEO SURVEILLANCE CAMERA NVR.
12. 2RU UPS WITH IP MANAGEMENT MODULE.
13. NOT USED.
14. INTRUSION DETECTION SYSTEM CONTROL PANEL.
15. DOOR ACCESS CONTROL SYSTEM PANEL.
16. 1RU FIBER TERMINATION CABINET (CORNING CCH-01U).
17. INSTALL 12-STRAND TIGHT BUFFERED RISER RATED SINGLEMODE FIBER OPTIC CABLE FROM MDF ROOM TO IDF ROOM (CORNING MIC RISER P/N 012E81-33131-24). TERMINATE FIBER AT BOTH ENDS IN 12-FIBER SINGLEMODE FUSION SPLICE CASSETTE WITH DUPLEX LC CONNECTORS (CORNING P/N CCH-CS12-A9-P00RE).
18. 4'-0" HIGH X 2'-0" WIDE X 2'-6" DEEP UL LISTED LOCKABLE WALL CABINET WITH FRONT AND REAR L-SHAPED MOUNTING BRACKETS. SECURE CABINET TO WALL WITH MINIMUM QTY (4) LAG BOLTS. INSTALL #6 GROUND WIRE FROM CABINET TO GROUND BAR. PROVIDE MANUFACTURER CABINET GROUNDING KIT TO ENABLE GROUND LUG ATTACHMENT TO RACK. PROVIDE QTY (50) EQUIPMENT MOUNTING SCREWS.
19. (1)2" PVC SCHEDULE 40 CONDUIT STUBBED UP 4" AFF AND ROUTED UNDERGROUND TO EXISTING AT&T PULLBOX. SEE SITE PLAN FOR ADDITIONAL CONDUIT DETAILS

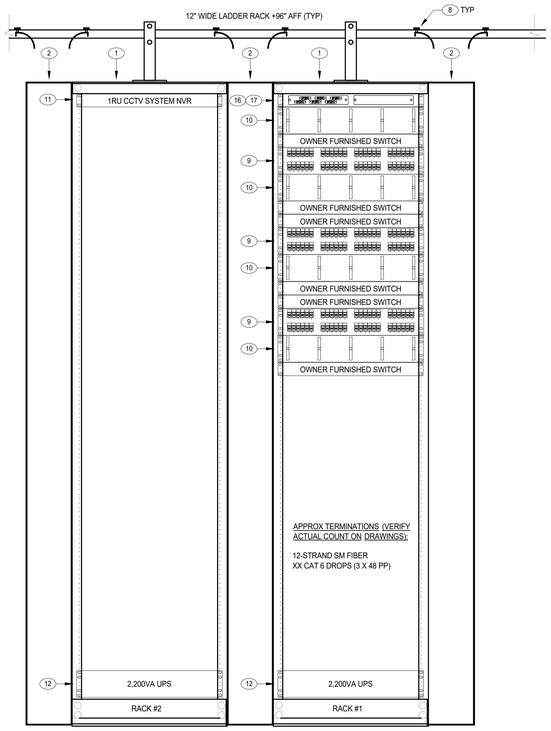

2 T0.04 MDF ROOM RACK ELEVATIONS

SCALE: 1/2" = 1'-0"

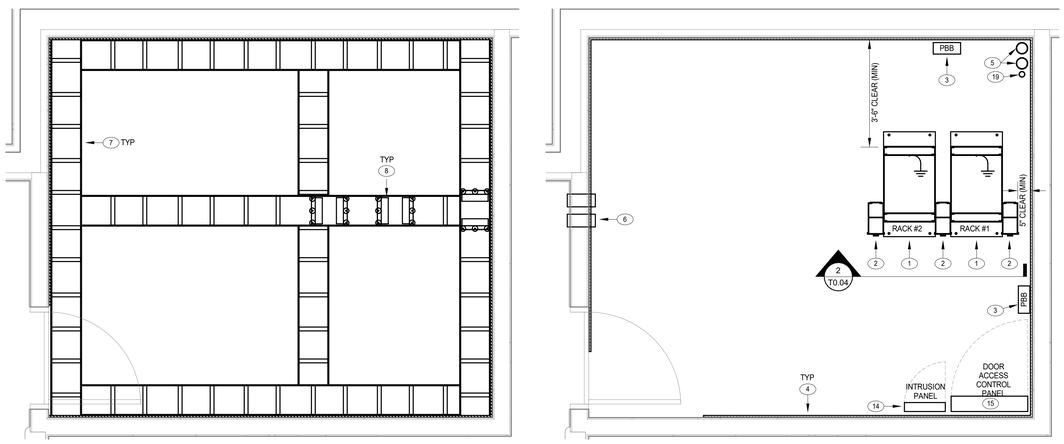

1 T0.04 ENLARGED MDF COMM ROOM PLAN

SCALE: 1/2" = 1'-0"

tsk
225 South Arlington Avenue
Reno NV, 89501
phone: 775.857.2949
fax: 775.857.2403
www.tska.com

THESE DRAWINGS AND SPECIFICATIONS ARE THE PROPERTY OF TATE SNYDER KIMSEY ARCHITECTS AND MAY NOT BE REPRODUCED OR USED FOR ANY PURPOSE WITHOUT THE ARCHITECTS WRITTEN CONSENT. AS INSTRUMENTS OF SERVICE, THESE DOCUMENTS ARE NOT FINAL AND READY FOR USE, AND THEREFORE NOT VALID, UNLESS THEY ARE SEALED, SIGNED AND DATED.

Copyright, Ltd 2023

Consultant

PK Electrical, Inc.
Engineering Design Consulting
681 Sierra Rose Drive, Suite B | Reno, NV 89511 | 775.826.9010
4601 DTC Boulevard, Suite 740 | Denver, CO 80237 | 720.481.3290
pkelectrical.com

PLEASE RECYCLE

Project
CITY OF FERNLEY CRRC

Job No: 21-058.00

Owner
CITY OF FERNLEY

50% CONSTRUCTION DOCUMENTS

REVISIONS		
REV	DATE	DESCRIPTION

Sheet Title
ENLARGED TELECOM ROOM PLANS

Date: MARCH 21, 2023

Sheet No:
T0.04

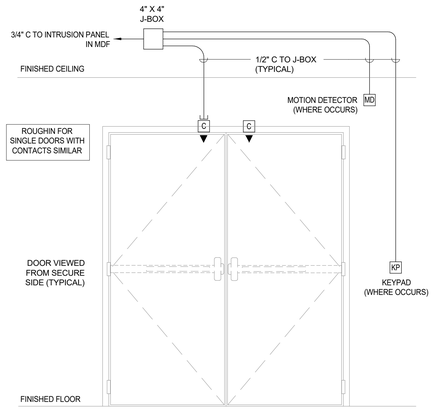

5 T0.05 DOUBLE DOOR WITH CONTACTS

SCALE: N.T.S.

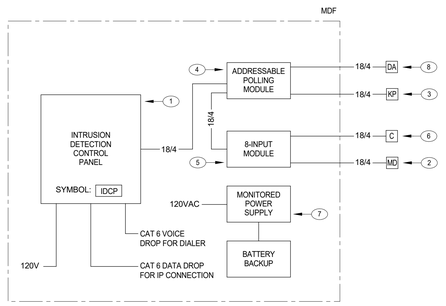

4 T0.05 INTRUSION DETECTION SYSTEM ONELINE DIAGRAM

SCALE: NONE

INTRUSION DETECTION SYSTEM CONTRACTOR QUALIFICATIONS

1. CONTRACTOR INSTALLING THE INTRUSION DETECTION SYSTEM SHALL BE A FIRM NORMALLY ENGAGED IN THE INSTALLATION, MAINTENANCE AND SUPPORT OF INTRUSION DETECTION AND/OR DOOR ACCESS CONTROL SYSTEMS. THE CONTRACTOR MUST HAVE A MINIMUM OF 5-YEARS EXPERIENCE INSTALLING SECURITY SYSTEMS OF SIMILAR SIZE AND SCOPE.
2. CONTRACTOR INSTALLING THE SYSTEM MUST BE A BOSCH AUTHORIZED INTRUSION ALARM SYSTEM INSTALLER.
3. THE CONTRACTOR SHALL HAVE SERVICE FACILITIES NEAR THE PROJECT SITE AND SHALL RESPOND TO SERVICE CALLS WITHIN A FOUR (4) HOUR PERIOD AFTER RECEIPT OF A SERVICE CALL. THIS INCLUDES WEEKENDS AND HOLIDAYS. AT THE TIME OF SERVICE, THE CONTRACTOR SHALL PROVIDE ALL EQUIPMENT, MATERIAL AND PERSONNEL NECESSARY TO PERFORM ALL REPAIRS.

INTRUSION DETECTION SYSTEM GENERAL NOTES

1. FURNISH AND INSTALL A COMPLETE AND OPERATIONAL INTRUSION DETECTION SYSTEM. FURNISH AND INSTALL ALL ANCILLARY DEVICES, EQUIPMENT AND CABLING FOR A COMPLETE SYSTEM. INSTALL ALL WORK IN ACCORDANCE WITH THE FOLLOWING CODES AND STANDARDS:
   A. ANSI/NFPA-70
   B. UL 1076 (BURGLAR ALARM AND SYSTEMS)
   C. AMERICAN WITH DISABILITIES ACT (ADA).
2. AT A MINIMUM, THE SYSTEM SHALL CONSIST OF THE FOLLOWING COMPONENTS:
   A. ADDRESSABLE MAGNETIC DOOR POSITION CONTACTS AT ALL EXTERIOR DOORS.
   B. ADDRESSABLE MOTION DETECTORS AT ALL PERIMETER ENTRY DOORS.
   C. KEYPADS FOR ARMING AND DISARMING THE SYSTEM AT ALL MAIN ENTRANCE DOORS.
   D. ZONED INTRUSION DETECTION PANEL WITH CAPACITY FOR ALL DEVICES SHOWN ON THE DRAWINGS PLUS 25% FUTURE EXPANSION. PROVIDE ZONE EXPANDERS, RELAY OUTPUTS, ETC. AS REQUIRED FOR A COMPLETE AND OPERABLE SYSTEM.
   E. AUTO DIALER.
   F. POWER SUPPLIES TO POWER THE PANEL AND ALL DEVICES.
   G. BATTERIES AND BATTERY CHARGERS. SUBMIT BATTERY CALCULATIONS FOR APPROVAL. BATTERIES SHALL BACKUP THE ENTIRE SYSTEM FOR A MINIMUM OF 4 HOURS.
3. ALL SECURITY DEVICES INCLUDING DOOR POSITION CONTACTS AND MOTION SENSORS SHALL BE ADDRESSABLE. WHEN A DEVICE IS IN ALARM THE SYSTEM SHALL IDENTIFY AND REPORT THE LOCATION OF THE DEVICE.
4. ALL INTRUSION DETECTION CABLING TO BE ROUTED IN CONDUIT FROM THE DEVICE TO THE PANEL LOCATED IN THE TELECOM ROOM. NO EXPOSED CABLING IS PERMITTED. PROVIDE RECESSED SINGLE GANG AND/OR DOUBLE GANG BACK BOXES AS REQUIRED AT EACH DEVICE. CABLING ROUTED IN UNDERGROUND CONDUIT SHALL BE RATED FOR OUTDOOR WET LOCATIONS.
5. NOT ALL DEVICES AND CABLING ARE SHOWN ON THE PLAN. SUBMIT SHOP DRAWINGS FOR APPROVAL INCLUDING POINT-TO-POINT WIRING AND PANEL BLOCK DIAGRAMS SHOWING ALL DEVICES AND REQUIRED CABLING.
6. SUBMIT CUT SHEETS FOR APPROVAL OF ALL SECURITY DEVICES, PANELS, ZONE EXPANDERS, RELAY BOARDS, AUTO DIALER, POWER SUPPLIES, BATTERIES, BATTERY CHARGERS AND CABLING.
7. AT THE COMPLETION OF THE PROJECT, TEST AND COMMISSION THE ENTIRE SYSTEM. PROGRAM THE SYSTEM IN ACCORDANCE WITH OWNER REQUIREMENTS.
8. COORDINATE DIAL-OUT AND CENTRAL STATION MONITORING WITH THE OWNER.
9. PROGRAM ZONES, SCHEDULES AND ACCESS CODES AS DIRECTED BY THE OWNER.
10. PROVIDE 1-HOUR TRAINING TO THE OWNER AT THE COMPLETION OF THE PROJECT. PROVIDE 2 SETS OF O&M MANUALS.
11. THE ENTIRE INTRUSION DETECTION SYSTEM SHALL BE GUARANTEED TO BE FREE FROM DEFECTS IN WORKMANSHIP AND MATERIALS FOR 1-YEAR FROM THE DATE OF FINAL ACCEPTANCE. CONTRACTOR WILL PROMPTLY REMEDY SUCH DEFECTS AND ANY SUBSEQUENT DAMAGE CAUSED BY THE DEFECTS OR REPAIR AT NO EXPENSE TO THE OWNER.

INTRUSION DETECTION SYSTEM SHEET NOTES

1. MAIN INTRUSION DETECTION PANEL (BOSCH P/N'S B9512G, B430, B8103, D101, D110, D1640, B520, D1218).
2. PIR MOTION DETECTOR WITH ANTI-MASK PROTECTION AND MOUNTING BRACKET (BOSCH P/N'S ISC-PPR1-WA16G, B328).
3. TOUCH SCREEN KEYPAD (BOSCH B942W).
4. ADDRESSABLE POLLING MODULE (BOSCH B299). WHERE FIELD DEVICES ARE DAISY CHAINED OFF OF POLLING MODULE, PROVIDE POPIT MODULES AS REQUIRED (BOSCH D9127U).
5. ADDRESSABLE 8-INPUT MODULE (BOSCH B208).
6. DOUBLE POLE, DOUBLE THROW DOOR CONTACTS PROVIDED ON DOORS WITH ACCESS CONTROL (GE 1076D OR EQUAL).
7. MONITORED POWER SUPPLY WITH BATTERY BACKUP (BOSCH P/N'S B520, D1218).
8. LATCHING DURESS ALARM PUSH BUTTON.

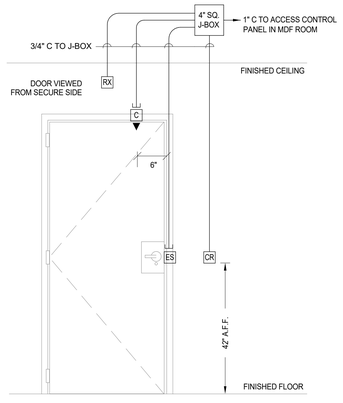

3 T0.05 CONDUIT ROUGHIN: SINGLE DOOR CARD READER IN W/ELECT STRIKE

SCALE: N.T.S.

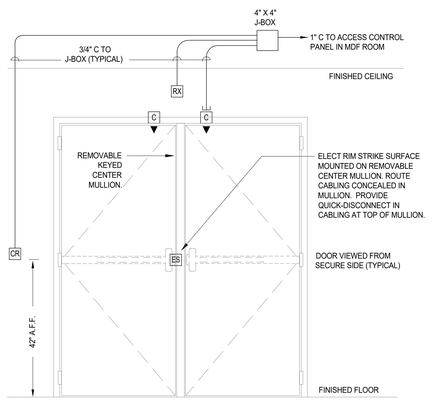

2 T0.05 CONDUIT ROUGHIN: DOUBLE DOOR CARD READER IN W/ELECT RIM STRIKE

SCALE: N.T.S.

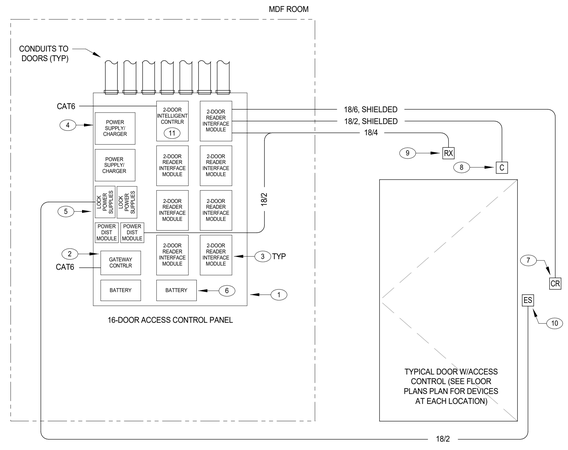

1 T0.05 ACCESS CONTROL SYSTEM ONELINE DIAGRAM

SCALE: NONE

ACCESS CONTROL SYSTEM GENERAL NOTES

1. THE CONTRACTOR MUST BE A GENETEC CERTIFIED PARTNER AND HAVE THE NECESSARY CERTIFICATIONS TO PURCHASE, INSTALL AND CONFIGURE THE SPECIFIED GENETEC EQUIPMENT AND SOFTWARE. THE SYSTEM PROGRAMMER SHALL HAVE ATTENDED MANUFACTURER TRAINING AND OBTAINED CERTIFICATION IN GENETEC™ SECURITY CENTER - SYNERGIS™ TECHNICAL CERTIFICATION.
2. SEE FLOOR PLANS FOR ACCESS CONTROL FIELD DEVICES AT EACH DOOR.
3. NOT ALL DEVICES AND CABLING ARE SHOWN IN THE SINGLE LINE DIAGRAM. SUBMIT SHOP DRAWINGS FOR APPROVAL INCLUDING POINT-TO-POINT WIRING AND PANEL BLOCK DIAGRAMS SHOWING ALL DEVICES AND REQUIRED CABLING.
4. SUBMIT SHOP DRAWINGS FOR APPROVAL SHOWING THE LAYOUT OF THE EQUIPMENT MOUNTED IN THE ACCESS CONTROL ENCLOSURE(S) INCLUDING GATEWAYS, INTELLIGENT CONTROLLERS, CARD READER BOARDS, I/O BOARDS, ADD-IN BOARDS, POWER SUPPLIES, BATTERY CHARGERS, FUSES, RELAYS, BATTERIES, NETWORK OUTLETS, ELECTRICAL OUTLETS, CABLE MANAGEMENT WIREWAYS, FANS, ETC.
5. SUBMIT MANUFACTURER PRODUCT DATA SHEETS FOR APPROVAL OF ALL ACCESS CONTROL EQUIPMENT INCLUDING BUT NOT LIMITED TO EQUIPMENT ENCLOSURES, CONTROLLERS, ADD-IN BOARDS, RELAYS, POWER SUPPLIES, BATTERIES, CABLING, REQUEST TO EXITS, DOOR CONTACTS, CARD READERS, ELECTRIC STRIKES, ELECTRIC LOCKS, LOCAL ALARMS, PUSH BUTTONS, WIRELESS RECEIVERS, ETC.
6. SUBMIT BATTERY CALCULATIONS FOR APPROVAL. BATTERIES SHALL BACKUP THE ENTIRE SYSTEM FOR A MINIMUM OF 4 HOURS.
7. ALL ACCESS CONTROL CABLING IS TO BE ROUTED IN CONDUIT FROM THE ACCESS CONTROL FIELD DEVICES AT EACH DOOR TO THE ACCESS CONTROL PANEL.
8. WHERE CABLING IS ROUTED IN UNDERGROUND CONDUIT, PROVIDE OUTDOOR RATED CABLE SUITABLE FOR WET UNDERGROUND DUCT INSTALLATION.

ACCESS CONTROL SYSTEM SHEET NOTES

1. 36" HIGH X 30" WIDE X 6 1/2" DEEP DOOR ACCESS CONTROL PANEL INCLUDING GATEWAY CONTROLLER, INTELLIGENT CONTROLLER, CARD READER INTERFACE MODULES, I/O MODULES, POWER SUPPLIES, BATTERY CHARGERS, POWER DISTRIBUTION MODULES, BATTERIES, ETC. MOUNT COMPONENTS IN LOCKABLE ENCLOSURE WITH TAMPER SWITCH AND FANFILTER KIT. LABEL OUTSIDE OF CABINET WITH ENGRAVED PLATE.
2. ACCESS CONTROL GATEWAY CONTROLLER WITH CAT 6 NETWORK DROP. CONTRACTOR TO CONFIGURE CONTROLLER TO COMMUNICATE WITH ACCESS CONTROL SERVER.
3. 2-DOOR CARD READER INTERFACE MODULES.
4. POWER SUPPLY / BATTERY CHARGER.
5. DISTRIBUTION AND LOCK POWER SUPPLIES.
6. 12V 12AH BATTERIES TO BACKUP DEVICES FOR MINIMUM OF 2 HOURS.
7. CONTACTLESS SMART CARD READER AT ACCESS CONTROL DOORS.
8. DOUBLE POLE DOUBLE THROW MAGNETIC DOOR POSITION CONTACTS.
9. REQUEST-TO-EXIT (REX) MOTION DETECTOR.
10. ELECTRIC STRIKE. SEE ARCHITECTURAL DOOR HARDWARE SCHEDULE.
11. 2-DOOR INTELLIGENT SYSTEM CONTROLLER WITH CAT 6 NETWORK DROP.

tsk
225 South Arlington Avenue
Reno NV, 89501
phone: 775.857.2949
fax: 775.857.2403
www.tska.com

THESE DRAWINGS AND SPECIFICATIONS ARE THE PROPERTY OF TATE SNYDER KIMSEY ARCHITECTS AND MAY NOT BE REPRODUCED OR USED FOR ANY PURPOSE WITHOUT THE ARCHITECTS WRITTEN CONSENT. AS INSTRUMENTS OF SERVICE, THESE DOCUMENTS ARE NOT FINAL AND READY FOR USE, AND THEREFORE NOT VALID, UNLESS THEY ARE SEALED, SIGNED AND DATED.
Copyright, Ltd 2023

Consultant

PK Electrical, Inc.
Engineering Design Consulting
681 Sierra Rose Drive, Suite B | Reno, NV 89511 | 775.826.9010
4601 DTC Boulevard, Suite 740 | Denver, CO 80237 | 720.481.3290
pkelectrical.com

PLEASE RECYCLE

Project
CITY OF FERNLEY CRRC

Job No: 21-058.00

Owner
CITY OF FERNLEY

50% CONSTRUCTION DOCUMENTS

REVISIONS		
REV	DATE	DESCRIPTION

Sheet Title
SECURITY INTRUSION DETECTION SYSTEM DETAILS

Date: MARCH 21, 2023

Sheet No:
T0.05

TBD

5 T0.06 CAMERA AND MOUNT SCHEDULE

SCALE: NONE

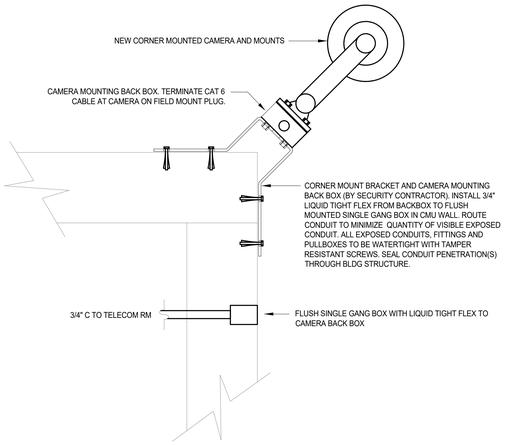

4 T0.06 CORNER MTD CAMERA (PLAN)

SCALE: NONE

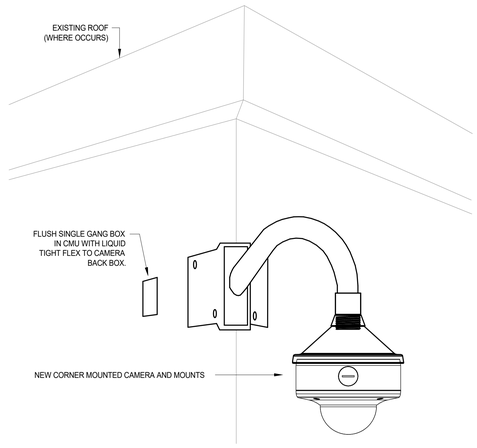

3 T0.06 CORNER MTD CAMERA (ELEV)

SCALE: NONE

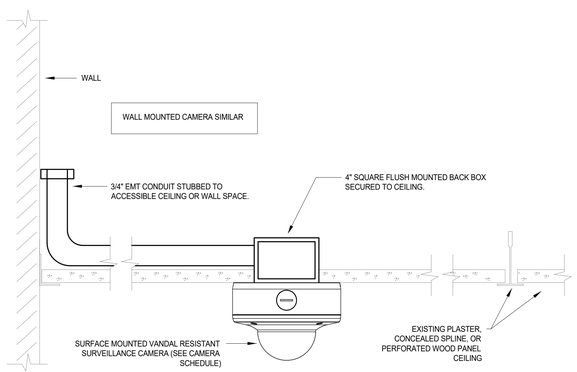

2 T0.06 SURFACE WALL/CEILING MOUNTED CAMERA

SCALE: NONE

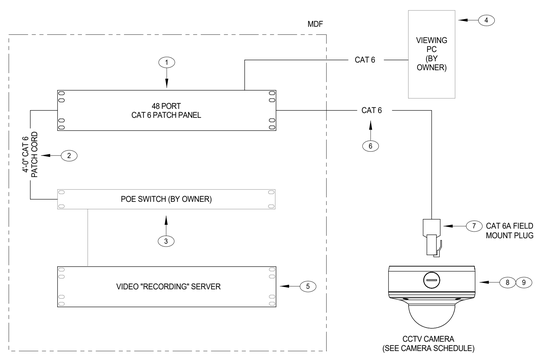

1 T0.06 VIDEO SURVEILLANCE CAMERA ONELINE DIAGRAM

SCALE: NONE

VIDEO SURVEILLANCE CAMERA ONELINE SHEET NOTES

1. 48-PORT CAT 6 PATCH PANEL IN TELECOM ROOM RACK.
2. 4'-0" CAT 6 PATCH CORD TO CROSS CONNECT CAMERAS TO OWNER FURNISHED POE SWITCHES. FURNISH QTY (1) 4'-0" PATCH COLOR FOR EACH CAMERA.
3. POE SWITCH (BY OWNER).
4. VIDEO VIEWING COMPUTER (BY OWNER). FURNISH, INSTALL AND CONFIGURE VMS CLIENT VIEWING SOFTWARE ON QTY (3) COMPUTERS AS DIRECTED BY OWNER.
5. RECORDING SERVER. SIZE SERVER TO ACCOMMODATE 30 DAYS OF RECORDED VIDEO AT FULL CAMERA RESOLUTION. INSTALL AND CONFIGURE "RECORDING" SERVER SOFTWARE ON SERVER. UPDATE THE SOFTWARE TO THE MOST CURRENT VERSION AT THE COMPLETION OF THE PROJECT.
6. FURNISH, INSTALL AND TERMINATE PLENUM RATED CAT 6 CABLE TO EACH CAMERA LOCATION. CABLES TO BE INSTALLED AND TESTED IN ACCORDANCE WITH THE DIVISION 27 SPECIFICATIONS.
7. TERMINATE CAT 6 CABLE AT CAMERA ON CAT 6A FIELD MOUNT PLUG AND CONNECT DIRECTLY TO CAMERA.
8. FURNISH AND INSTALL IP VIDEO SURVEILLANCE CAMERA AND ASSOCIATED MOUNTS/RACEWAY (SEE CAMERA SCHEDULE FOR CAMERA AND MOUNT REQUIREMENTS).
9. DOWNLOAD AND INSTALL THE LATEST FIRMWARE FROM THE MANUFACTURER'S WEBSITE ON ALL CAMERAS AT THE COMPLETION OF THE PROJECT.

tsk
225 South Arlington Avenue
Reno NV, 89501
phone: 775.857.2949
fax: 775.857.2403
www.tska.com

THESE DRAWINGS AND SPECIFICATIONS ARE THE PROPERTY OF TATE SNYDER KIMSEY ARCHITECTS AND MAY NOT BE REPRODUCED OR USED FOR ANY PURPOSE WITHOUT THE ARCHITECTS WRITTEN CONSENT. AS INSTRUMENTS OF SERVICE, THESE DOCUMENTS ARE NOT FINAL AND READY FOR USE, AND THEREFORE NOT VALID, UNLESS THEY ARE SEALED, SIGNED AND DATED.

Copyright, Ltd 2023

Consultant

PK Electrical, Inc.
Engineering Design Consulting
681 Sierra Rose Drive, Suite B | Reno, NV 89511 | 775.826.9010
4601 DTC Boulevard, Suite 740 | Denver, CO 80237 | 720.481.3290
pkelectrical.com

PLEASE RECYCLE

Project
CITY OF FERNLEY CRRC

Job No: 21-058.00

Owner
CITY OF FERNLEY

50% CONSTRUCTION DOCUMENTS

REVISIONS		
REV	DATE	DESCRIPTION

Sheet Title
SECURITY VIDEO SURVEILLANCE CAMERA DETAILS

Date: MARCH 21, 2023

Sheet No:
T0.06

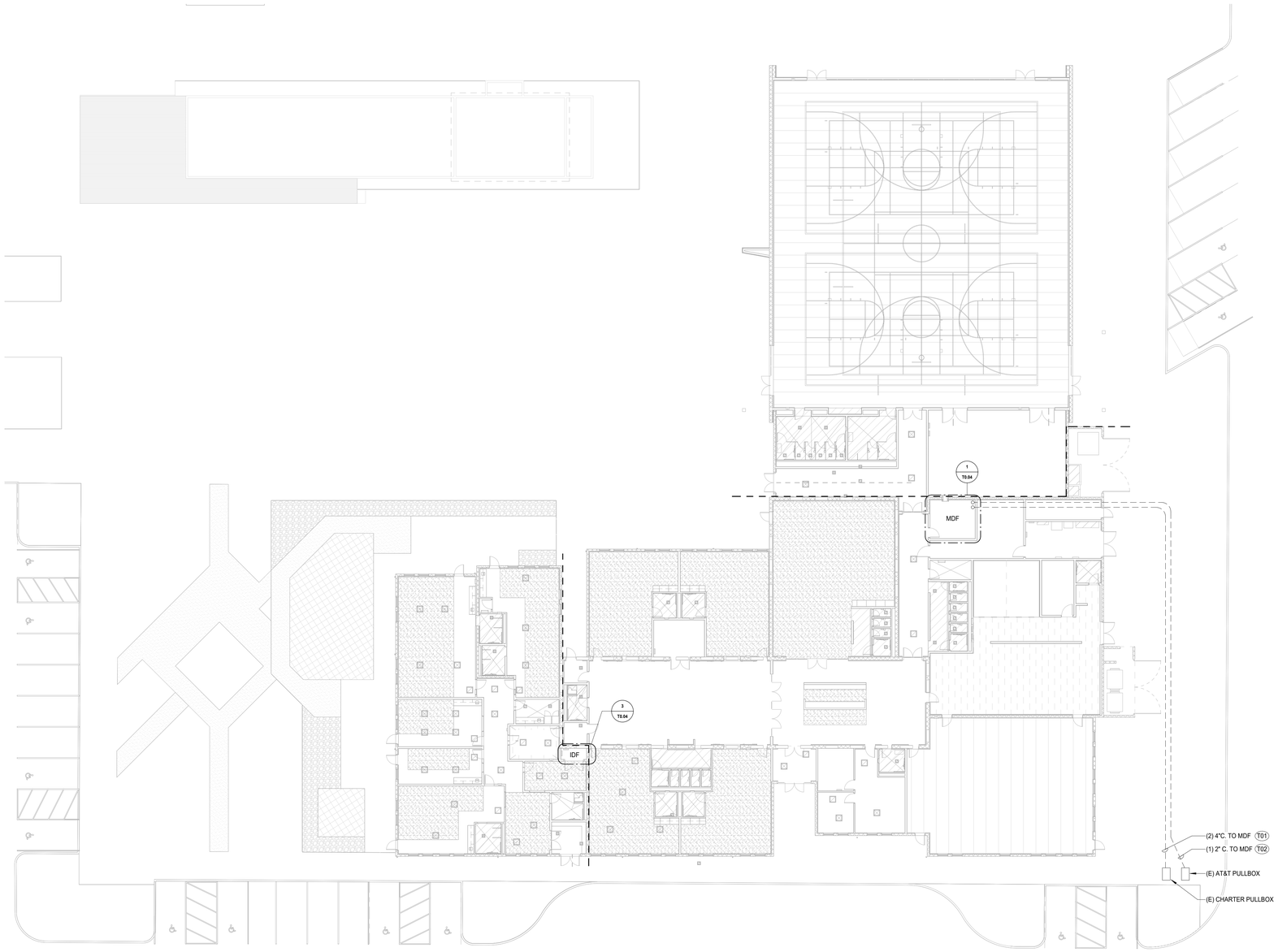

1 T1.01 TELECOM SITE PLAN
Scale: 1/16" = 1'-0"

GENERAL NOTES

1. (E) AND/OR SOLID HALFTONE LINES INDICATE EXISTING EQUIPMENT, (R) AND/OR DASHED LINES INDICATE RELOCATED EQUIPMENT, (N) AND/OR SOLID LINES INDICATE NEW EQUIPMENT UNLESS NOTED OTHERWISE.
2. SEE ONELINE DIAGRAM(S) FOR CONDUIT, WIRE SIZES AND EQUIPMENT REQUIREMENTS.
3. IT IS THE CONTRACTOR'S RESPONSIBILITY TO COORDINATE WITH APPLICABLE UTILITY COMPANY'S DRAWINGS AND REPRESENTATIVES FOR DETERMINING THE EXACT RESPONSIBILITY OF EACH PARTY.
4. SEE UTILITY DRAWINGS FOR ALL UTILITY WORK WORK REQUIRED. CONTRACTOR SHALL BE RESPONSIBLE FOR INCLUDING ALL WORK REQUIRED IN BID. COORDINATE WITH EACH SITE UTILITY.
5. IT IS THE CONTRACTOR'S RESPONSIBILITY TO CALL 1-800-227-2600 FOR LOCATES PRIOR TO DIGGING. IT IS ALSO THE CONTRACTORS RESPONSIBILITY TO LOCATE ALL NON-UTILITY UNDERGROUND ITEMS.
6. THE MAXIMUM NUMBER OF CONDUIT BENDS SHOULD NOT BE GREATER THAN 270 DEGREES BETWEEN PULLING STRUCTURES. THIS INCLUDES THE AGGREGATE OF ALL HORIZONTAL AND VERTICAL CHANGES.
7. ALL CONDUIT, INNERDUCT, PULLBOXES AND VAULTS SHALL BE LABELED PER THE SPECIFICATIONS.
8. PROVIDE #10 CU CONDUCTORS IN 3/4" CONDUIT MINIMUM, UNLESS NOTED OTHERWISE, FOR ALL SITE LIGHTING AND SITE RECEPTACLE CIRCUITS.
9. ALL RECEPTACLES WITH WEATHER PROOF DESIGNATION SHALL BE PROVIDED WITH 'WHILE IN USE' COVERS.
10. FURNISH AND INSTALL METALLIC TRACE TAPE ON TOP OF CONDUITS IN TRENCH.
11. EACH CONDUIT AND INNERDUCT SHALL BE PROVIDED WITH A 1250 LBS. PULL ROPE.
12. COORDINATE LOCATION OF BELOW-GRADE CONDUITS, DUCT BANKS, ETC. WITH CIVIL ENGINEER AND OTHER TRADES PRIOR TO ROUGH-IN.

(###) SHEET NOTES

T01 (2)4" PVC SCHEDULE 40 CONDUITS ROUTED UNDERGROUND FROM EXISTING CHARTER PULLBOX AND STUBBING UP 4" AFF IN MDF COMM ROOM. FURNISH ONE CONDUIT WITH A 4-3 CELL FABRIC INNERDUCT WITH PULL STRINGS. ONE CONDUIT LEFT EMPTY FOR SPARE WITH PULL STRING.

T02 (1)2" PVC SCHEDULE 40 CONDUIT ROUTED UNDERGROUND FROM EXISTING AT&T PULLBOX AND STUBBING UP 4" AFF IN MDF COMM ROOM. FURNISH CONDUIT WITH A 2-3 CELL FABRIC INNERDUCT WITH PULL STRINGS.

tsk
225 South Arlington Avenue
Reno NV, 89501
phone: 775.857.2949
fax: 775.857.2403
www.tska.com

THESE DRAWINGS AND SPECIFICATIONS ARE THE PROPERTY OF TATE SNYDER KIMSEY ARCHITECTS AND MAY NOT BE REPRODUCED OR USED FOR ANY PURPOSE WITHOUT THE ARCHITECTS WRITTEN CONSENT. AS INSTRUMENTS OF SERVICE, THESE DOCUMENTS ARE NOT FINAL AND READY FOR USE, AND THEREFORE NOT VALID, UNLESS THEY ARE SEALED, SIGNED AND DATED.
Copyright, Ltd 2023

Consultant

PK Electrical, Inc.
Engineering Design Consulting
681 Sierra Rose Drive, Suite B | Reno, NV 89511 | 775.826.9010
4601 DTC Boulevard, Suite 740 | Denver, CO 80237 | 720.481.3290
pkelectrical.com

PLEASE RECYCLE

Project
CITY OF FERNLEY CRRC

Job No: 21-058.00

Owner
CITY OF FERNLEY

50% CONSTRUCTION DOCUMENTS

REVISIONS		
REV	DATE	DESCRIPTION

Sheet Title
TELECOM SITE PLAN

Date: MARCH 21, 2023
Sheet No:
T1.01

GENERAL NOTES

1. ALL TELECOMMUNICATIONS CABELING SHOWB ON THIS SHEET SHALL TERMINATE IN MDF ROOM 101 (UNLESS OTHERWISE NOTED)
2. LOCATIONS AND MOUNTING HEIGHTS SHALL BE VERIFIED WITH ARCHITECT PRIOR TO INSTALLATION.
3. REFER TO SHEET T0.01 FOR SYMBOLS, LEGEND, AND PROJECT GENERAL NOTES.
4. PROVIDE NECESSARY CONDUIT PENETRATIONS AND SLEEVES INTO TELECOM ROOM FOR ALL DATA, AUDIO/VIDEO AND SECURITY CABLING.
5. PROVIDE FIRESTOPPING AS REQUIRED PER APPLICABLE CODES.
6. SEE SHEET T0.06 FOR ACCESS CONTROL SECURITY SYSTEMS DOOR DETAILS.
7. SEE SHEET T0.06 FOR CCTV CAMERA MOUNTING DETAILS.
8. PROVIDE BUSHING ON ALL CONDUIT ENDS.
9. ALL CONDUITS AND INNERDUCTS SHALL HAVE PULL STRING INSTALED IN PATHWAYS WITH INSTALLED CABLING FOR FUTURE USE.
10. E.C. SHALL COORDINATE ALL OUTLET ROUGH -IN LOCATIONS AND HEIGHT WITH AUDIO/VIDEO VENDOR/CONTRACTOR PRIOR TO CONDUIT AND BOX INSTALLATION FOR DISPLAY AND ALL ASSOCIATED AV EQUIPMENT.

SHEET NOTES

T03 ARM/DISARM KEYPAD FOR SECURITY INTRUSION DETECTION SYSTEM. MOUNTED PER MANUFACTURER'S REQUIREMENTS.

T04 VIDEO INTERCOM DOOR STATION MOUNTED PER MANUFACTURER'S REQUIREMENTS.

T05 VIDEO INTERCOM MAIN CONTROL STATION. DESK MOUNTED.

T06 DOOR RELEASE PUSH BUTTON. DESK MOUNTED.

T07 SEE DETAIL ON SHEET#.##.

T08 DATA OUTLET FOR BUILDING AUTOMATION SYSTEMS NETWORKING. VERIFY EXACT LOCATION REQUIREMENTS WITH SYSTEM CONTRACTOR PRIOR TO ROUGH-IN.

T09 SEE EXTERIOR WAP MOUNTING DETAIL ON SHEET T#.##.

T10 SEE EXTERIOR SPEAKER MOUNTING DETAIL ON SHEET T#.##.

T11 AUDIO/VISUAL EQUIPMENT CABINET. SEE DETAIL ON SHEET T#.##.

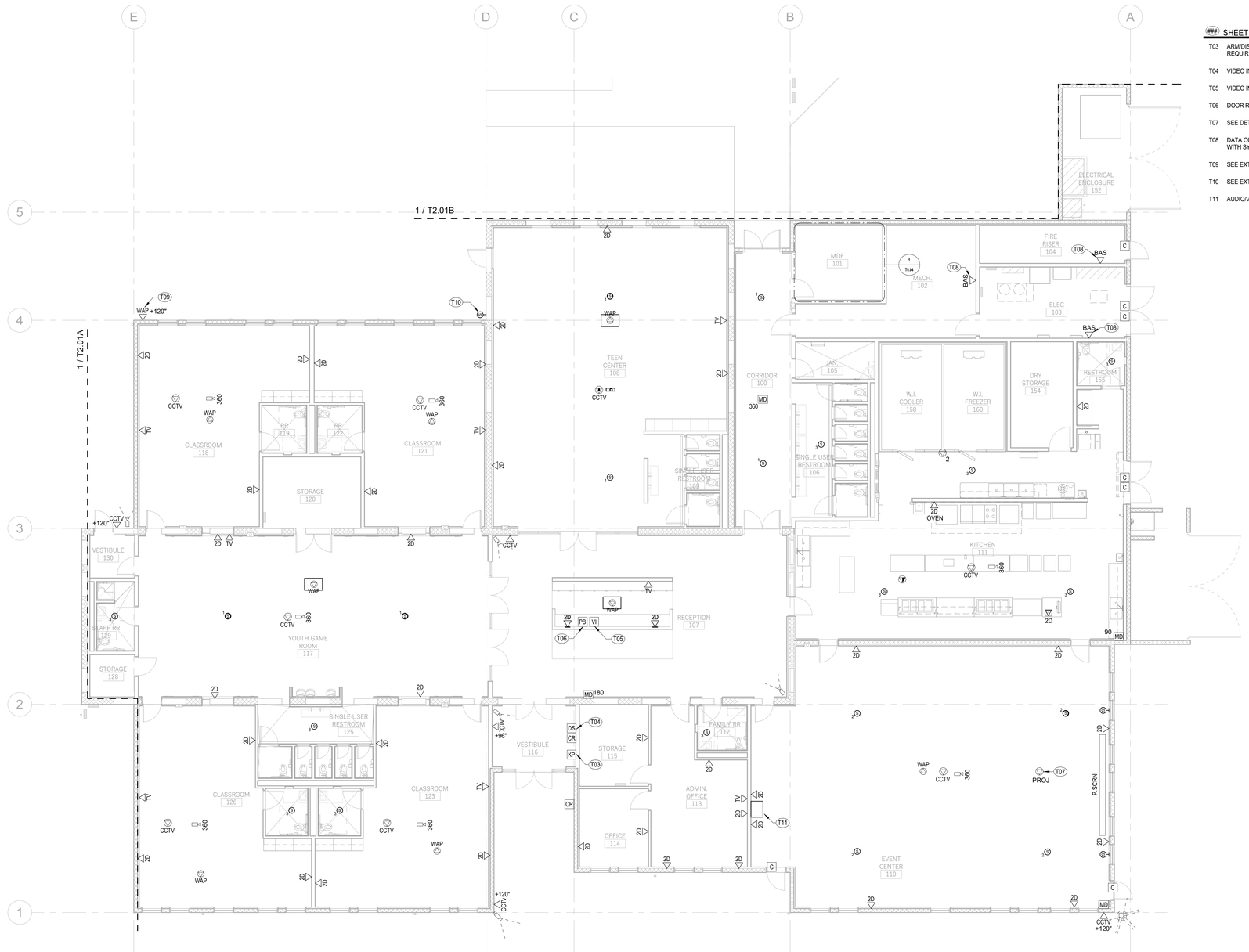

1 T2.01 TELECOM PLAN - BASE BID

Scale: 1/8" = 1'-0"

tsk
225 South Arlington Avenue
Reno NV, 89501
phone: 775.857.2949
fax: 775.857.2403
www.tska.com

THESE DRAWINGS AND SPECIFICATIONS ARE THE PROPERTY OF TATE SNYDER KIMSEY ARCHITECTS AND MAY NOT BE REPRODUCED OR USED FOR ANY PURPOSE WITHOUT THE ARCHITECTS WRITTEN CONSENT. AS INSTRUMENTS OF SERVICE, THESE DOCUMENTS ARE NOT FINAL AND READY FOR USE, AND THEREFORE NOT VALID, UNLESS THEY ARE SEALED, SIGNED AND DATED.

Copyright, Ltd 2023

Consultant

PK Electrical, Inc.
Engineering Design Consulting
681 Sierra Rose Drive, Suite B | Reno, NV 89511 | 775.826.9010
4601 DTC Boulevard, Suite 740 | Denver, CO 80237 | 720.481.3290
pkelectrical.com

PLEASE RECYCLE

Project
CITY OF FERNLEY CRRC

Job No: 21-058.00

Owner
CITY OF FERNLEY

50% CONSTRUCTION DOCUMENTS

REVISIONS		
REV	DATE	DESCRIPTION

Sheet Title
TELECOM PLAN - BASE BID

Date: MARCH 21, 2023

Sheet No:
T2.01



1 LIFE SAFETY PLAN - EARLY LEARNING
SCALE: 1/8" = 1'-0"

NORTH

GENERAL NOTES

1 PER 2019 CBC SECTION 703.7: FIRE WALLS, FIRE BARRIERS, AND SMOKE PARTITIONS OR ANY OTHER WAL REQUIRED TO HAVE PROTECTED OPENINGS OR PENETRATIONS SHALL BE EFFECTIVELY AND PERMANENTLY IDENTIFIED WITH SIGNS OR STENCILING. SUCH IDENTIFICATION SHALL: (1) BE LOCATED WITHIN 15' OF THE END OF EACH WALL AND AT INTERVALS NOT EXCEEDING 30' MEASURED HORIZONTALLY ALONG THE WALL OR PARTITION; AND (3) INCLUDE LETTERING NOT LESS THAN 3" IN HEIGHT WITH A MINIMUM 3/8" STROKE IN A CONTRASTING COLOR INCORPORATING THE SUGGESTED WORKING: "FIRE AND/OR SMOKE BARRIER - PROTECT ALL OPENINGS" OR OTHER WORDING.

KEYNOTES

LEGEND

ROOM 101 500 SF 100 5 — ROOM NAME; OCCUPANT LOAD; OCCUPANT LOAD FACTOR; AREA; ROOM NUMBER
1 HR FIRE PARTITION
2 HR FIRE PARTITION
SMOKE RESISTIVE PARTITION
PATH OF EGRESS TO EXIT DISCHARGE
0 — EXIT DIRECTION AND NUMBER OF OCCUPANTS
MOST REMOTE POINT FOR TRAVEL DISTANCE
F.E.C. — FIRE EXTINGUISHER CABINET - FINAL LOCATION TO BE FINALIZED BY CONTRACTOR AND LOCAL FIRE DEPARTMENT
EXIT SIGN, SEE ELECTRICAL DRAWINGS

KEYPLAN

tsk
225 South Arlington Avenue
Reno NV, 89501
phone: 775.857.2949
fax: 775.857.2403
www.tska.com

THESE DRAWINGS AND SPECIFICATIONS ARE THE PROPERTY OF TATE SNYDER KIMSEY ARCHITECTS AND MAY NOT BE REPRODUCED OR USED FOR ANY PURPOSE WITHOUT THE ARCHITECTS WRITTEN CONSENT. AS INSTRUMENTS OF SERVICE, THESE DOCUMENTS ARE NOT FINAL AND READY FOR USE, AND THEREFORE NOT VALID, UNLESS THEY ARE SEALED, SIGNED AND DATED.
Copyright, Ltd 2023

Consultant

PLEASE RECYCLE

Project
CITY OF FERNLEY CRRC

Job No: 21-058.00

Owner
CITY OF FERNLEY

50 % CONSTRUCTION DOCUMENTS

REVISIONS		
REV	DATE	DESCRIPTION

Sheet Title
LIFE SAFETY PLAN - ALT. A

Date: MARCH 21, 2023
Sheet No:
G1.02A

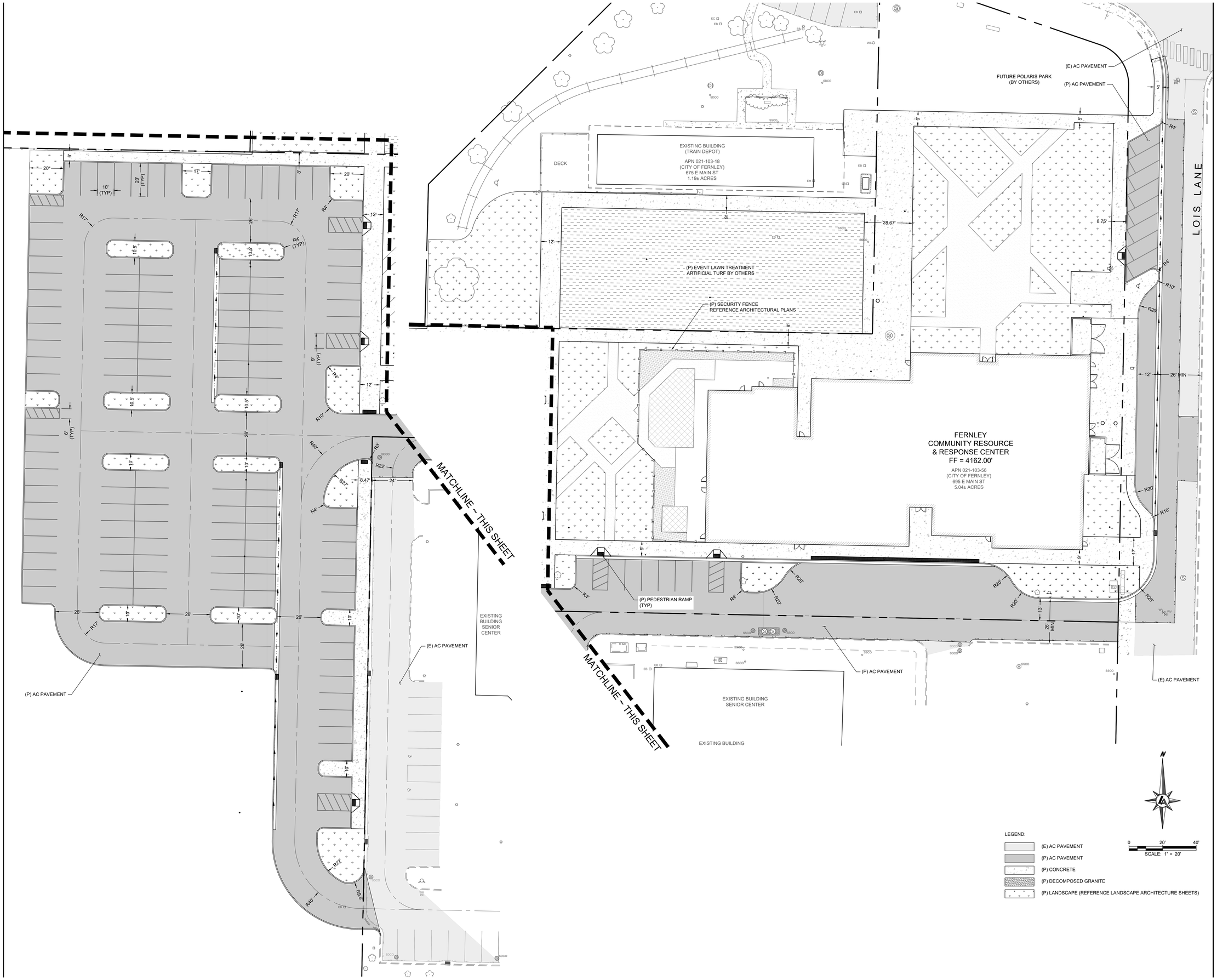

tsk
225 South Arlington Avenue
Reno NV, 89501
phone: 775.857.2949
fax: 775.857.2403
www.tska.com

THESE DRAWINGS AND SPECIFICATIONS ARE THE PROPERTY OF TATE SNYDER KIMSEY ARCHITECTS AND MAY NOT BE REPRODUCED OR USED FOR ANY PURPOSE WITHOUT THE ARCHITECTS WRITTEN CONSENT. AS INSTRUMENTS OF SERVICE, THESE DOCUMENTS ARE NOT FINAL AND READY FOR USE, AND THEREFORE NOT VALID, UNLESS THEY ARE SEALED, SIGNED AND DATED.

Copyright, Ltd 2023

Consultant

LUMOS & ASSOCIATES
9222 PROTOTYPE DRIVE
RENO, NV 89521
TEL: 775.827.6111
WWW.LUMOSINC.COM
INFO@LUMOSINC.COM

PLEASE RECYCLE

Project
CITY OF FERNLEY
CRRC

Job No: 21-058.00

Owner
CITY OF FERNLEY

50% CONSTRUCTION DOCUMENT

REVISIONS		
REV	DATE	DESCRIPTION

Sheet Title
SITE PLAN
ALTERNATE A

Date: MARCH 21, 2023
Sheet No:

C2.00A

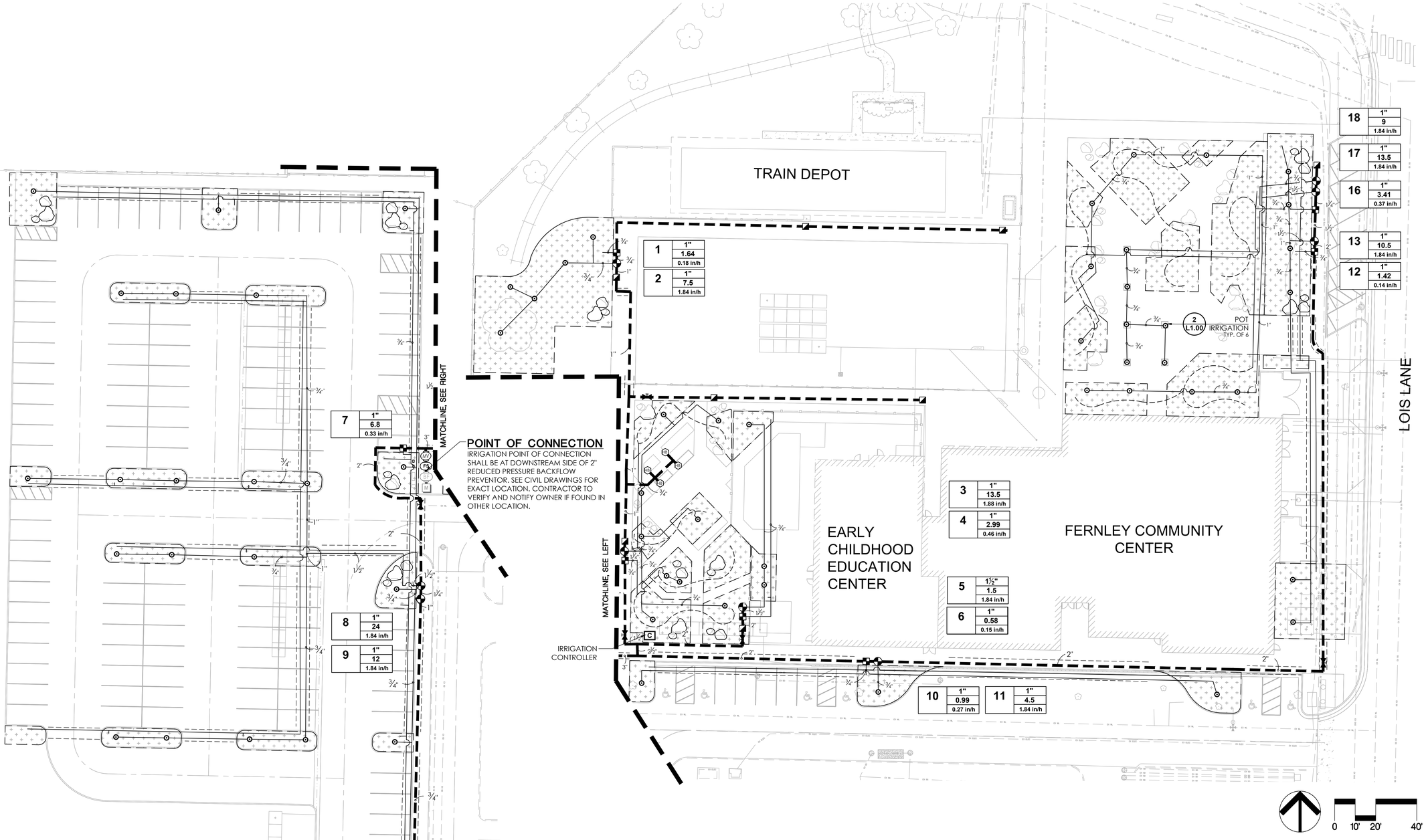

tsk
225 South Arlington Avenue
Reno NV, 89501
phone: 775.857.2949
fax: 775.857.2403
www.tska.com

THESE DRAWINGS AND SPECIFICATIONS ARE THE PROPERTY OF TATE SNYDER KIMSEY ARCHITECTS AND MAY NOT BE REPRODUCED OR USED FOR ANY PURPOSE WITHOUT THE ARCHITECTS WRITTEN CONSENT. AS INSTRUMENTS OF SERVICE, THESE DOCUMENTS ARE NOT FINAL AND READY FOR USE, AND THEREFORE NOT VALID, UNLESS THEY ARE SEALED, SIGNED AND DATED.

Copyright, Ltd 2023

Consultant

CALA
12150 Tributary Point Dr. Suite 140
Gold River , CA 95670
T 916.985.4366
www.callanderassociates.com

PLEASE RECYCLE

Project
CITY OF FERNLEY CRRC

Job No: 21-058.00

Owner
CITY OF FERNLEY

50% CONSTRUCTION DOCUMENT

REVISIONS		
REV	DATE	DESCRIPTION

Sheet Title
IRRIGATION PLAN ALTERNATE A

Date: MARCH 21, 2023
Sheet No:

L1.01A

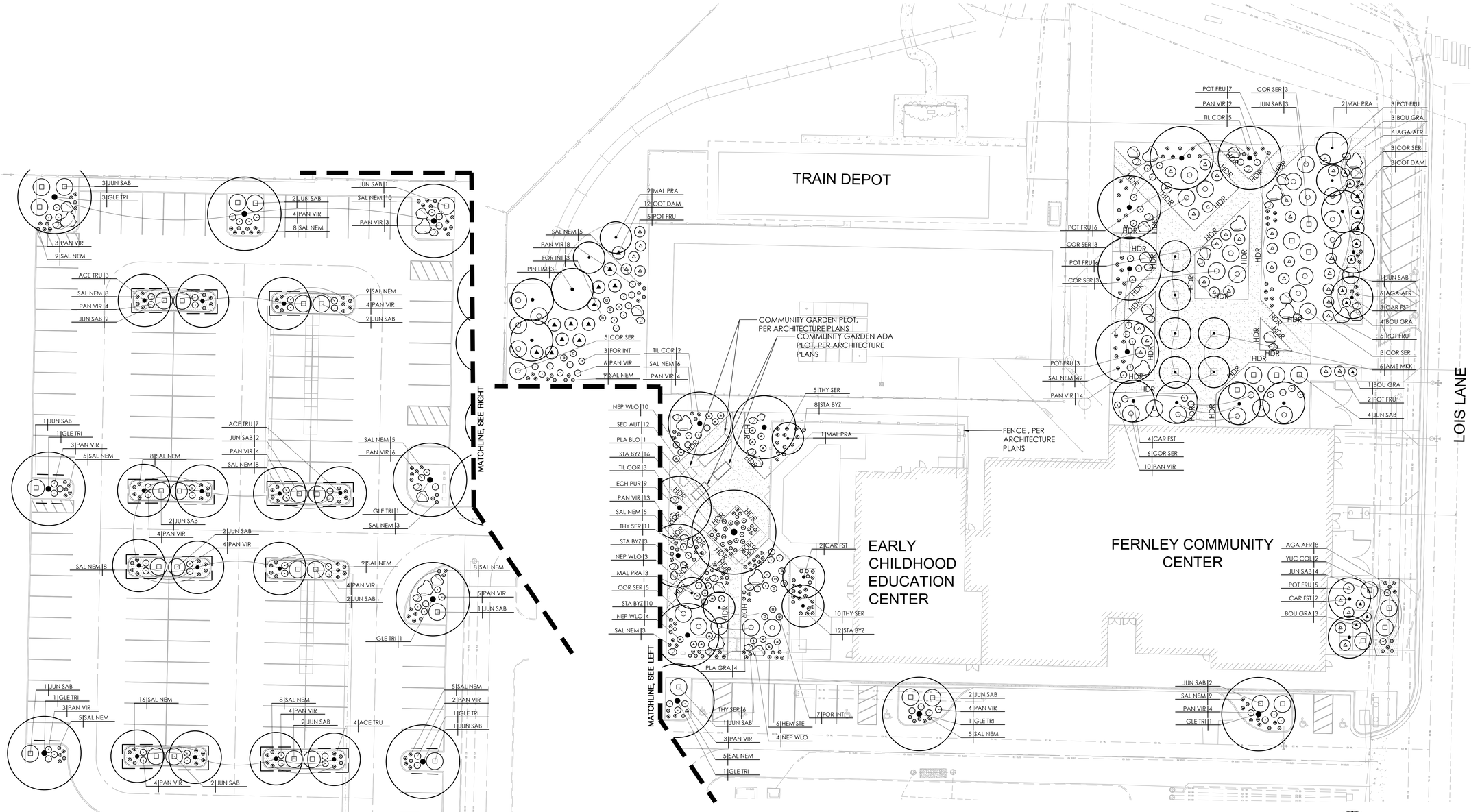

LANDSCAPE REQUIREMENTS - ALTERNATE A

	REQUIRED	PROVIDED
MINIMUM LANDSCAPE REQUIREMENT, 15% OF SITE	4 AC X 10% = 0.4 AC (17,424 SF)	1 AC (47,822 SF)
MINIMUM TREES IN REQUIRED LANDSCAPE AREA, 1 TREE EVERY 300 SF	17,424 SF / 300 SF = 58 TREES	66
MINIMUM NUMBER OF SHRUBS IN REQUIRED LANDSCAPE AREA, 1 SHRUB EVER 15 SF	17,424 SF / 15 SF = 1,161 SHRUBS	686 SHRUBS

tsk
225 South Arlington Avenue
Reno NV, 89501
phone: 775.857.2949
fax: 775.857.2403
www.tska.com

THESE DRAWINGS AND SPECIFICATIONS ARE THE PROPERTY OF TATE SNYDER KIMSEY ARCHITECTS AND MAY NOT BE REPRODUCED OR USED FOR ANY PURPOSE WITHOUT THE ARCHITECTS WRITTEN CONSENT. AS INSTRUMENTS OF SERVICE, THESE DOCUMENTS ARE NOT FINAL AND READY FOR USE, AND THEREFORE NOT VALID, UNLESS THEY ARE SEALED, SIGNED AND DATED.
Copyright, Ltd 2023

Consultant

CALA
12150 Tributary Point Dr. Suite 140
Gold River , CA 95670
T 916.985.4366
www.callanderassociates.com

PLEASE RECYCLE

Project
CITY OF FERNLEY CRRC

Job No: 21-058.00

Owner
CITY OF FERNLEY

50% CONSTRUCTION DOCUMENT

REVISIONS		
REV	DATE	DESCRIPTION

Sheet Title
LANDSCAPE PLAN ALTERNATE A

Date: MARCH 21, 2023
Sheet No:
L2.01A

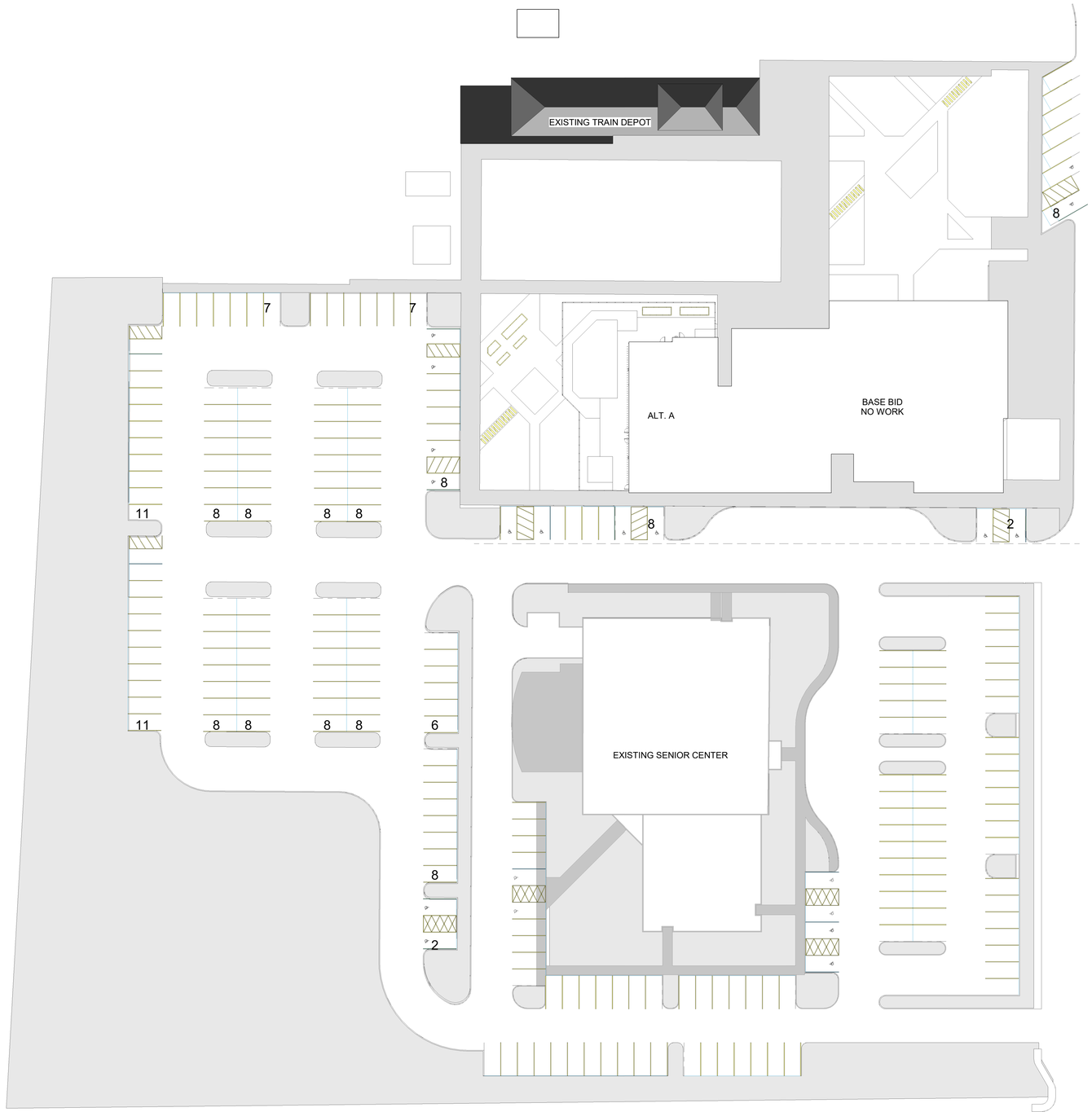

PARKING COUNTS:
ADA STALLS = 12
PARKING STALLS = 108
TOTAL PARKING = 120

1 OVERALL SITE PLAN - EARLY LEARNING
SCALE: 1" = 30'-0"

NORTH 0' 30' 60' 120'

GENERAL NOTES

1. CONTRACTOR TO VERIFY DIMENSIONS IN FIELD PRIOR TO THE COMMENCEMENT OF ANY SITE WORK. DO NOT SCALE DRAWINGS.
2. REFER TO LANDSCAPE DRAWINGS FOR LANDSCAPE INFORMATION.
3. REFER TO CIVIL DRAWINGS FOR CURB DIMENSIONS.
4. REFER TO ARCHITECTURAL DRAWINGS FOR PARKING DIMENSIONS, AND STREET DIMENSIONS.
5. SEE ENLARGED SITE PLANS FOR ALL SITE PLAN KEYNOES.

KEYNOTES

LEGEND

tsk
225 South Arlington Avenue
Reno NV, 89501
phone: 775.857.2949
fax: 775.857.2403
www.tska.com

THESE DRAWINGS AND SPECIFICATIONS ARE THE PROPERTY OF TATE SNYDER KIMSEY ARCHITECTS AND MAY NOT BE REPRODUCED OR USED FOR ANY PURPOSE WITHOUT THE ARCHITECTS WRITTEN CONSENT. AS INSTRUMENTS OF SERVICE, THESE DOCUMENTS ARE NOT FINAL AND READY FOR USE, AND THEREFORE NOT VALID, UNLESS THEY ARE SEALED, SIGNED AND DATED.
Copyright, Ltd 2023

Consultant

PLEASE RECYCLE

Project
CITY OF FERNLEY CRRC

Job No: 21-058.00

Owner
CITY OF FERNLEY

50 % CONSTRUCTION DOCUMENTS

REVISIONS		
REV	DATE	DESCRIPTION

Sheet Title
SITE PLAN - ALT. A

Date: MARCH 21, 2023
Sheet No:
AS1.01A

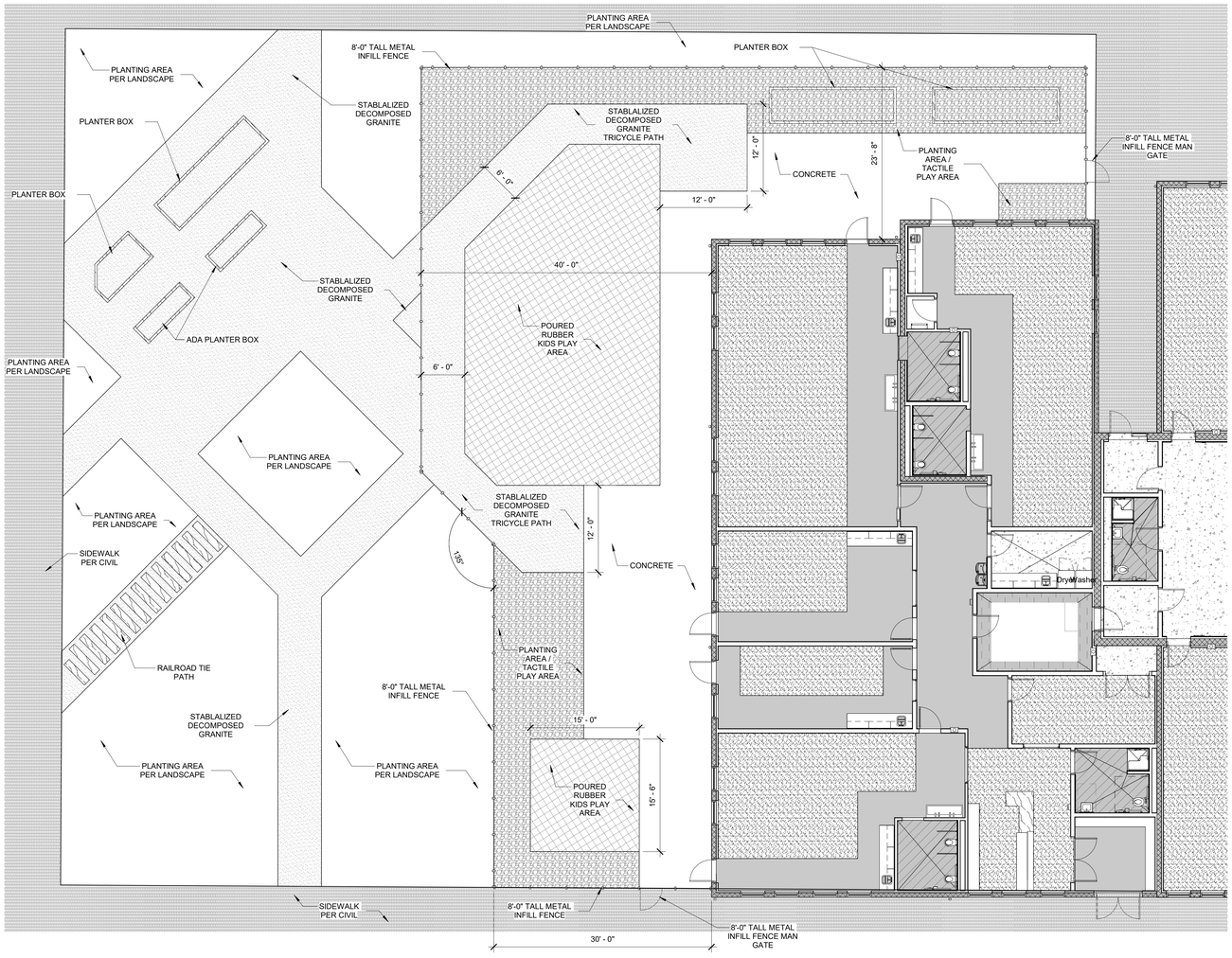

1 ENLARGED SITE PLAN - ALT. A
SCALE: 1/8" = 1'-0"

NORTH 0' 30' 60' 120'

GENERAL NOTES

1. CONTRACTOR TO VERIFY DIMENSIONS IN FIELD PRIOR TO THE COMMENCEMENT OF ANY SITE WORK. DO NOT SCALE DRAWINGS.
2. REFER TO LANDSCAPE DRAWINGS FOR LANDSCAPE INFORMATION.
3. REFER TO CIVIL DRAWINGS FOR CURB DIMENSIONS.
4. REFER TO ARCHITECTURAL DRAWINGS FOR PARKING DIMENSIONS, AND STREET DIMENSIONS.
5. SEE ENLARGED SITE PLANS FOR ALL SITE PLAN KEYNOES.

KEYNOTES

LEGEND

tsk
225 South Arlington Avenue
Reno NV, 89501
phone: 775.857.2949
fax: 775.857.2403
www.tska.com

THESE DRAWINGS AND SPECIFICATIONS ARE THE PROPERTY OF TATE SNYDER KIMSEY ARCHITECTS AND MAY NOT BE REPRODUCED OR USED FOR ANY PURPOSE WITHOUT THE ARCHITECTS WRITTEN CONSENT.
AS INSTRUMENTS OF SERVICE, THESE DOCUMENTS ARE NOT FINAL AND READY FOR USE, AND THEREFORE NOT VALID, UNLESS THEY ARE SEALED, SIGNED AND DATED.
Copyright, Ltd 2023

Consultant

PLEASE RECYCLE

Project
CITY OF FERNLEY CRRC

Job No: 21-058.00

Owner
CITY OF FERNLEY

50 % CONSTRUCTION DOCUMENTS

REVISIONS		
REV	DATE	DESCRIPTION

Sheet Title
ENLARGED SITE PLAN - ALT. A

Date: MARCH 21, 2023
Sheet No:
AS1.11A

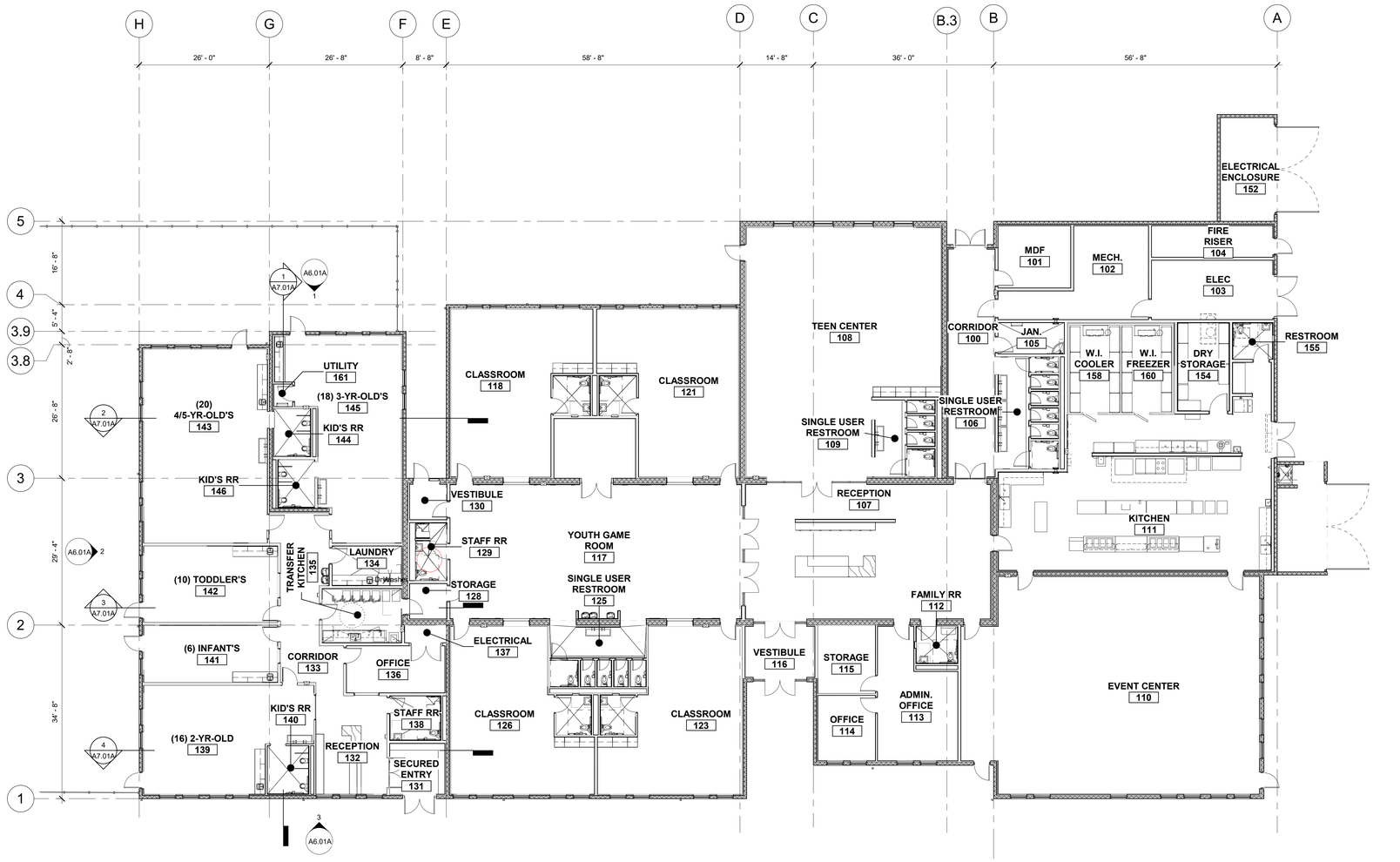

1 FLOOR PLAN - ALT. A
SCALE: 3/32" = 1'-0"

NORTH 0' 5' 11' 21'

GENERAL NOTES

1. ALL DIMENSION ARE TAKEN FROM FACE OF STUD, MASONRY, OR CONCRETE U.N.O.
2. SEE STRUCTURAL, MECHANICAL, PLUMBING, AND ELECTRICAL DRAWINGS FOR ADDITIONAL WORK NOT SHOWN ON THIS DRAWING.
3. SEE ELECTRICAL DRAWINGS FOR INFORMATION ON ELECTRICAL/TELECOM ROOMS.
4. ALL EQUIPMENT (O.F.O.I AND C.F.C.I.), SHALL COMPLY WITH ACCESSIBILITY REQUIREMENTS.

KEYNOTES

LEGEND

KEYPLAN

tsk
225 South Arlington Avenue
Reno NV, 89501
phone: 775.857.2949
fax: 775.857.2403
www.tska.com

THESE DRAWINGS AND SPECIFICATIONS ARE THE PROPERTY OF TATE SNYDER KIMSEY ARCHITECTS AND MAY NOT BE REPRODUCED OR USED FOR ANY PURPOSE WITHOUT THE ARCHITECTS WRITTEN CONSENT.
AS INSTRUMENTS OF SERVICE, THESE DOCUMENTS ARE NOT FINAL AND READY FOR USE, AND THEREFORE NOT VALID, UNLESS THEY ARE SEALED, SIGNED AND DATED.
Copyright, Ltd 2023

Consultant

PLEASE RECYCLE

Project
CITY OF FERNLEY CRRC

Job No: 21-058.00

Owner
CITY OF FERNLEY

50 % CONSTRUCTION DOCUMENTS

REVISIONS		
REV	DATE	DESCRIPTION

Sheet Title
OVERALL FLOOR PLAN - ALT. A

Date: MARCH 21, 2023
Sheet No:
A1.01A

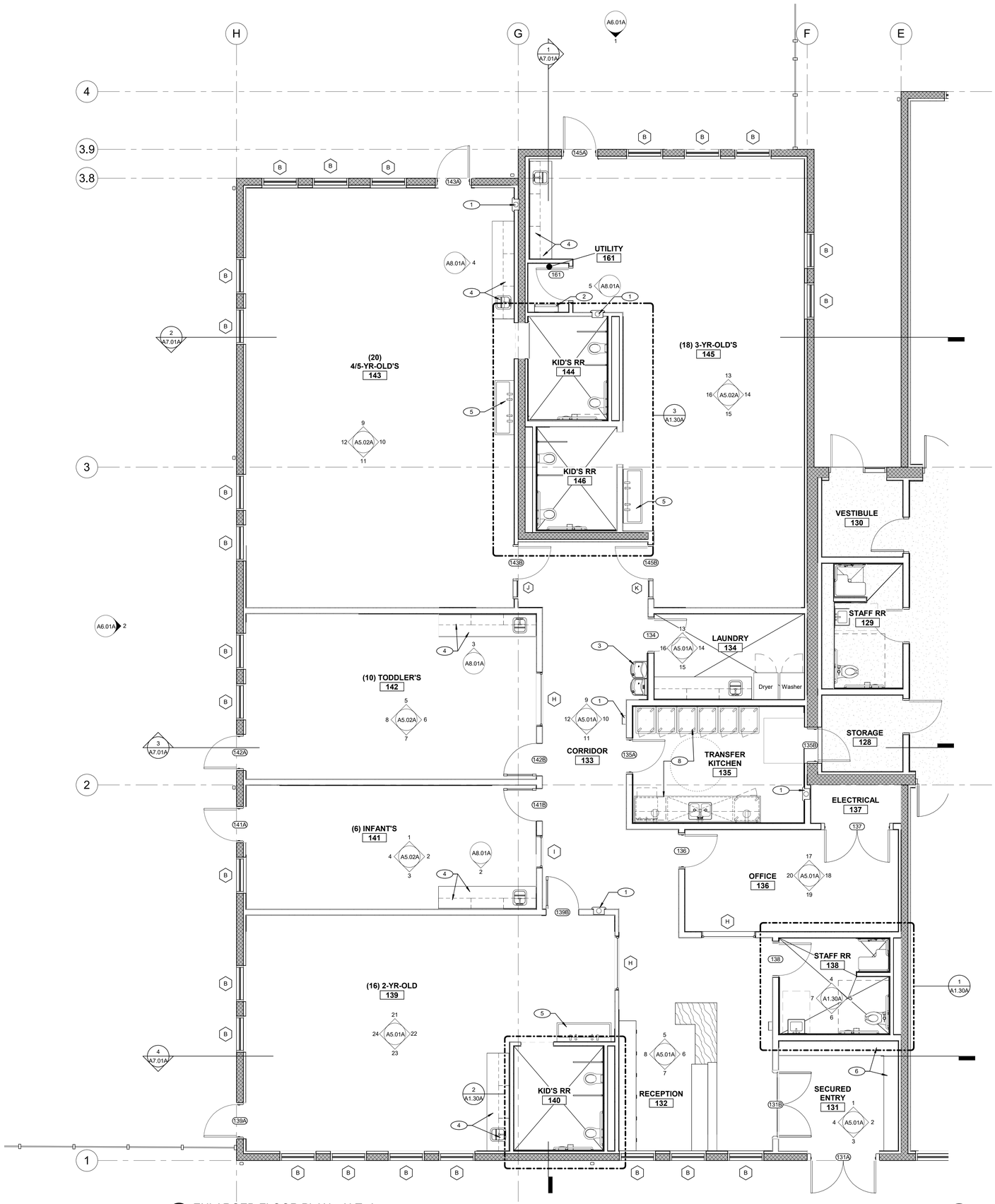

1 ENLARGED FLOOR PLAN - ALT. A
SCALE: 1/4" = 1'-0"

GENERAL NOTES

1. ALL DIMENSION ARE TAKEN FROM FACE OF STUD, MASONRY, OR CONCRETE U.N.O.
2. SEE STRUCTURAL, MECHANICAL, PLUMBING, AND ELECTRICAL DRAWINGS FOR ADDITIONAL WORK NOT SHOWN ON THIS DRAWING.
3. SEE ELECTRICAL DRAWINGS FOR INFORMATION ON ELECTRICAL/TELECOM ROOMS.
4. ALL EQUIPMENT (O.F.O.I AND C.F.C.I.), SHALL COMPLY WITH ACCESSIBILITY REQUIREMENTS.

KEYNOTES

1. FIRE EXTINGUISHER
2. ROOF ACCESS LADDER, SEE ROOF DETAILS
3. ADA DRINKING FOUNTAIN AND WATER BOTTLE FILLER.
4. CASEWORK AND COUNTERTOP, SEE CASEWORK DETAILS.
5. TWO STATION LAVATORY
6. CAR SEAT STORAGE RACK.
7. WALKING IN COOLER/FREEZER, SEE KITCHEN DWGS.
8. KITCHEN EQUIPMENT & LAYOUT, SEE KITCHEN DWGS.
9. TRASH CAN WASH STATION, SEE KITCHEN DWGS.
10. BIRCH PLYWOOD CUT OUTS TO BE APPLIED ON THE WALL. SEE ELEVATION FOR MORE INFORMATION.
11. TRASH BIN BY OWNER.
12. CORNER MOP SINK, SEE KITCHEN DWGS.
13. PAINTED STEEL COLUMN, SEE STRUCTURAL DWGS.
14. EXPANSION JOINT, SEE DETAIL XX/AX.XX

LEGEND

tsk
225 South Arlington Avenue
Reno NV, 89501
phone: 775.857.2949
fax: 775.857.2403
www.tska.com

THESE DRAWINGS AND SPECIFICATIONS ARE THE PROPERTY OF TATE SNYDER KIMSEY ARCHITECTS AND MAY NOT BE REPRODUCED OR USED FOR ANY PURPOSE WITHOUT THE ARCHITECTS WRITTEN CONSENT. AS INSTRUMENTS OF SERVICE, THESE DOCUMENTS ARE NOT FINAL AND READY FOR USE, AND THEREFORE NOT VALID, UNLESS THEY ARE SEALED, SIGNED AND DATED.
Copyright, Ltd 2023

Consultant

PLEASE RECYCLE

Project
CITY OF FERNLEY CRRC

Job No: 21-058.00

Owner
CITY OF FERNLEY

50 % CONSTRUCTION DOCUMENTS

REVISIONS		
REV	DATE	DESCRIPTION

Sheet Title
ENLARGED FLOOR PLAN - ALT. A

Date: MARCH 21, 2023
Sheet No:
A1.11A

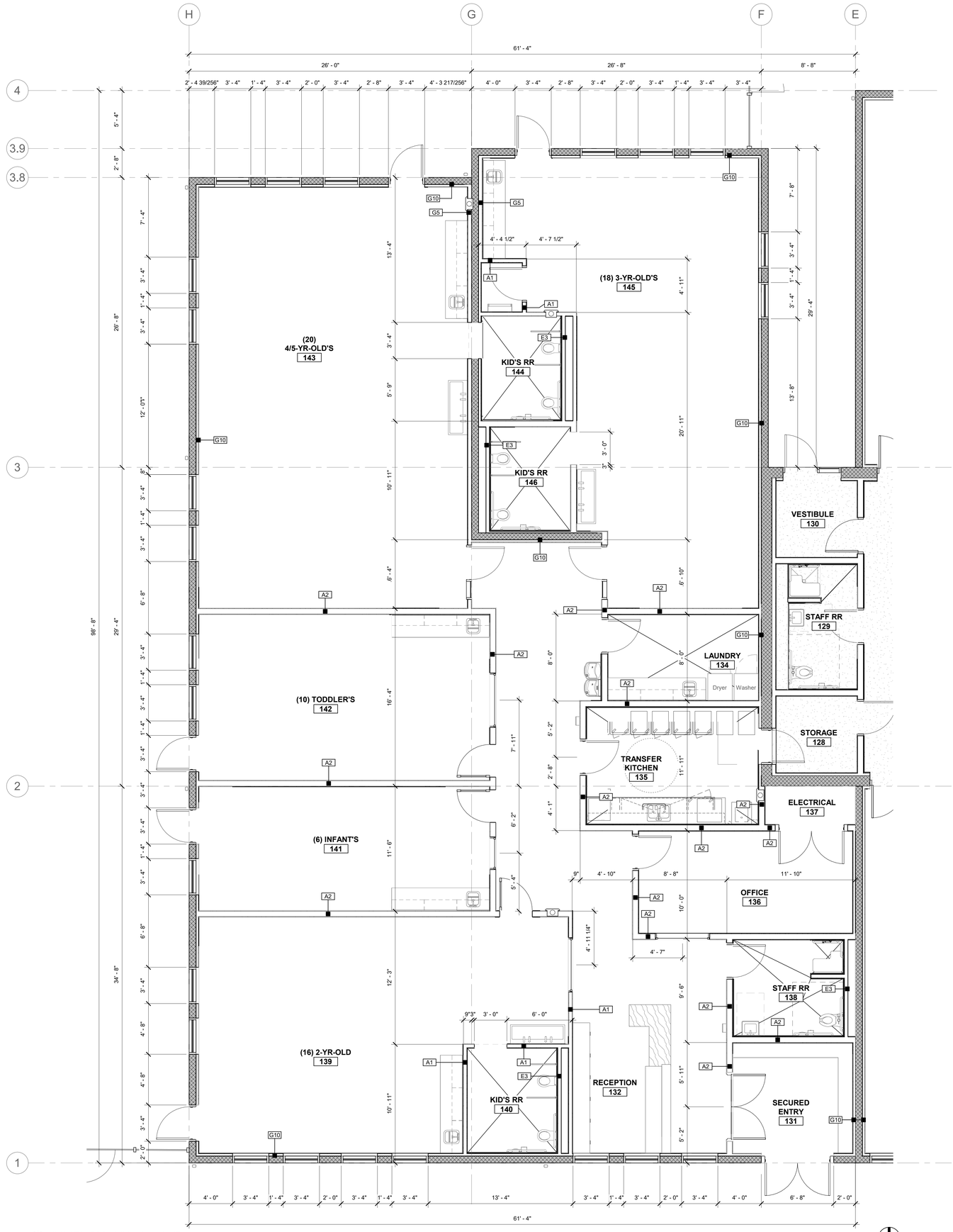

1 DIMENSION PLAN - ALT. A
SCALE: 1/4" = 1'-0"

NORTH

GENERAL NOTES

1. ALL DIMENSION ARE TAKEN FROM FACE OF STUD, MASONRY, OR CONCRETE U.N.O.
2. SEE OVERALL FLOOR PLANS FOR EQUIPMENT SCHEDULE, MARKERBOARD AND TACKBOARD SCHEDULE, AND KEYNOTE ITEMS NOT LABELED IN DIMENSION PLANS.

KEYNOTES

tsk
225 South Arlington Avenue
Reno NV, 89501
phone: 775.857.2949
fax: 775.857.2403
www.tska.com

THESE DRAWINGS AND SPECIFICATIONS ARE THE PROPERTY OF TATE SNYDER KIMSEY ARCHITECTS AND MAY NOT BE REPRODUCED OR USED FOR ANY PURPOSE WITHOUT THE ARCHITECTS WRITTEN CONSENT. AS INSTRUMENTS OF SERVICE, THESE DOCUMENTS ARE NOT FINAL AND READY FOR USE, AND THEREFORE NOT VALID, UNLESS THEY ARE SEALED, SIGNED AND DATED.

Copyright, Ltd 2023

Consultant

PLEASE RECYCLE

Project
CITY OF FERNLEY CRRC

Job No: 21-058.00

Owner
CITY OF FERNLEY

50 % CONSTRUCTION DOCUMENTS

REVISIONS

REV	DATE	DESCRIPTION

Sheet Title
DIMENSION & PARTITION PLAN - ALT. A

Date: MARCH 21, 2023
Sheet No:
A1.21A

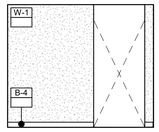

19 KIDS RR 144 WEST
SCALE: 1/4" = 1'-0"

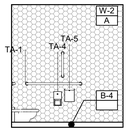

18 KIDS RR 144 SOUTH
SCALE: 1/4" = 1'-0"

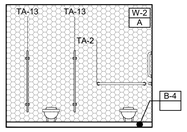

17 KIDS RR 144 EAST
SCALE: 1/4" = 1'-0"

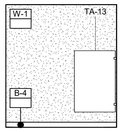

16 KIDS RR 144 NORTH
SCALE: 1/4" = 1'-0"

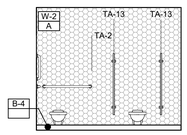

15 KIDS RR 146 WEST
SCALE: 1/4" = 1'-0"

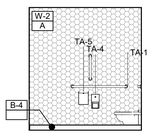

14 KIDS RR 146 SOUTH
SCALE: 1/4" = 1'-0"

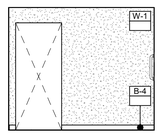

13 KIDS RR 146 EAST
SCALE: 1/4" = 1'-0"

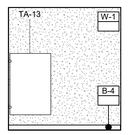

12 KIDS RR 146 NORTH
SCALE: 1/4" = 1'-0"

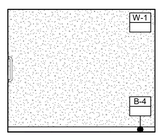

11 KIDS RR 140 WEST
SCALE: 1/4" = 1'-0"

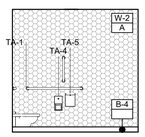

10 KIDS RR 140 SOUTH
SCALE: 1/4" = 1'-0"

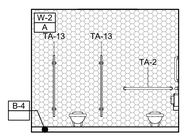

9 KIDS RR 140 EAST
SCALE: 1/4" = 1'-0"

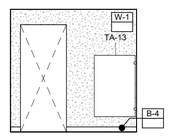

8 KIDS RR 140 NORTH
SCALE: 1/4" = 1'-0"

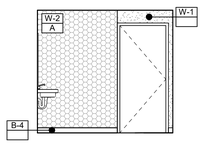

7 STAFF RR 138 WEST
SCALE: 1/4" = 1'-0"

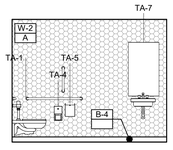

6 STAFF RR 138 SOUTH
SCALE: 1/4" = 1'-0"

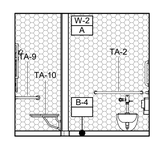

5 STAFF RR 138 EAST
SCALE: 1/4" = 1'-0"

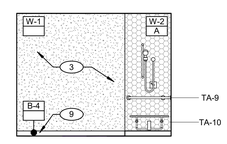

4 STAFF RR 138 NORTH
SCALE: 1/4" = 1'-0"

SPECIALTY EQUIPMENT SCHEDULE - ALT A

SYMBOL	DESCRIPTION	MANUFACTURER	Model	ADULT MOUNTING HEIGHT	CHILDREN MOUNTING HEIGHT	KINDER MOUNTING HEIGHT
TA-1	42" 1-1/2" DIA. S.S. GRAB BAR W/ CONCEALED MOUNTING	BOBRICK	B-6806.99 X 42"	2'-11" A.F.F. (U.N.O.)	2'-0" A.F.F. (U.N.O)	
TA-2	36" 1-1/2" DIA. S.S. GRAB BAR W/ CONCEALED MOUNTING	BOBRICK	B-6806.99 X 36"	2'-11" A.F.F. (U.N.O.)		
TA-3	18" x 1-1/2" DIA. S.S. GRAB BAR W/ CONCEALED MOUNTING	BOBRICK	B-6806.99 X 18"	3'-0" A.F.F. (U.N.O.)	2'-0" A.F.F. (U.N.O)	1'-8" A.F.F.
TA-4	TOILET PAPER DISPENSER	CONTINENTAL	401 SD	1'-7" A.F.F. (U.N.O.)	1'-4" A.F.F. (U.N.O.)	1'-2" A.F.F.
TA-5	BOBRICK B-270 CONTURA SERIES SURFACE MOUNTED SANITARY NAPKIN DISPOSAL	BOBRICK	B-270	1'-7" A.F.F. (U.N.O.)	1'-4" A.F.F. (U.N.O.)	1'-2" A.F.F.
TA-6	CLASSICSERIES® RECESSED CONVERTIBLE PAPER TOWEL DISPENSER AND WASTE RECEPTACLE	BOBRICK	B-3940	3'-10" A.F.F. (U.N.O.)	3'-0" A.F.F. (U.N.O.)	3'-0" A.F.F. (U.N.O.)
TA-7	MIRROR WELDED-FRAME MIRROR	BOBRICK	B-290 2436	6'-2" A.F.F.		
TA-8	SURFACE-MOUNTED TOILET SEAT-COVER DISPENSER	BOBRICK	B-4221	-		-
TA-9	BOBRICK B-6861.99 TWO-WALL SHOWER STALL PEENED GRAB BAR	BOBRICK	B-6861.99			
TA-10	ADA SHOWER SEAT	SEE SPECS	BASED ON ASI 8205	1'-7" A.F.F. (U.N.O.)		
TA-12	BABY CHANGING STATION	KOALA KARE	KB200-01	2'-6" A.F.F. (U.N.O.)		
TA-13	RESTROOM PARTITIONS, URINAL SCREEN	BRADLEY CORPORATION	BAKED ENAMEL - URINAL SCREEN			

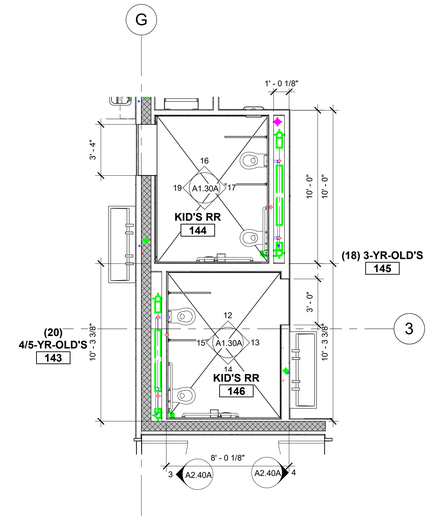

3 KIDS RR 144 & 146 - ALT. A
SCALE: 1/4" = 1'-0"

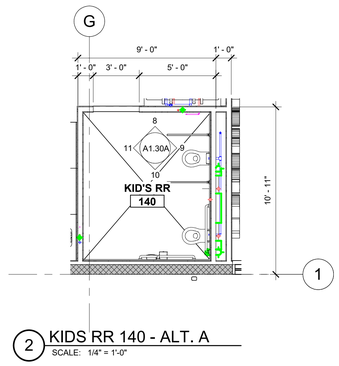

2 KIDS RR 140 - ALT. A
SCALE: 1/4" = 1'-0"

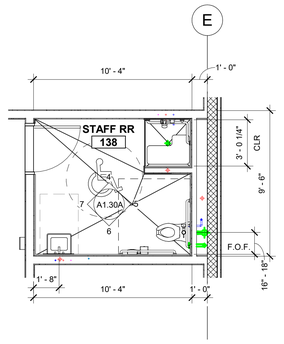

1 STAFF RR 138 - ALT. A
SCALE: 1/4" = 1'-0"

GENERAL NOTES

1. ALL DIMENSIONS ARE TAKEN FROM FACE OF STUD, MASONRY, OR CONCRETE U.N.O.
2. SEE EQUIPMENT SCHEDULE AND SPECIFICATIONS FOR ADDITIONAL INFORMATION. NOT SHOWN ON DRAWINGS.
3. ALL EQUIPMENT (O.F.O.I AND C.F.C.I.), SHALL COMPLY WITH ACCESSIBILITY REQUIREMENTS.

KEYNOTES

1. RUBBER BASE, SEE FINISH SCHEDULE.
2. ROOF ACCESS LADDER, SEE ROOF DETAILS
3. FOR WALL FINISHES SEE FINISH SCHEDULE.
4. FLOOR TRENCH DRAIN, SEE PLUMBING DWGS.
5. PAINTED STRUCTURAL FRAMING, SEE STRUCTURAL DWGS.
6. PAINTED DOOR AND FRAME, SEE FINISH SCHEDULE.
7. CORNER MOP SINK, SEE KITCHEN DWGS.
9. FOR WALL BASE, SEE ROOM FINISH SCHEDULE.
10. WALL MOUNTED FAUCET, SEE PLUMBING DWGS.
11. TWO STATION LAVATORY
12. ADA DRINKING FOUNTAIN AND WATER BOTTLE FILLER.

LEGEND

tsk
225 South Arlington Avenue
Reno NV, 89501
phone: 775.857.2949
fax: 775.857.2403
www.tska.com

THESE DRAWINGS AND SPECIFICATIONS ARE THE PROPERTY OF TATE SNYDER KIMSEY ARCHITECTS AND MAY NOT BE REPRODUCED OR USED FOR ANY PURPOSE WITHOUT THE ARCHITECTS WRITTEN CONSENT. AS INSTRUMENTS OF SERVICE, THESE DOCUMENTS ARE NOT FINAL AND READY FOR USE, AND THEREFORE NOT VALID, UNLESS THEY ARE SEALED, SIGNED AND DATED.

Copyright, Ltd 2023

Consultant

PLEASE RECYCLE

Project
CITY OF FERNLEY CRRC

Job No: 21-058.00

Owner
CITY OF FERNLEY

50 % CONSTRUCTION DOCUMENTS

REVISIONS		
REV	DATE	DESCRIPTION

Sheet Title
ENLARGED RESTROOM PLANS & INTERIOR ELEVATIONS - ALT. A

Date: MARCH 21, 2023

Sheet No:
A1.30A

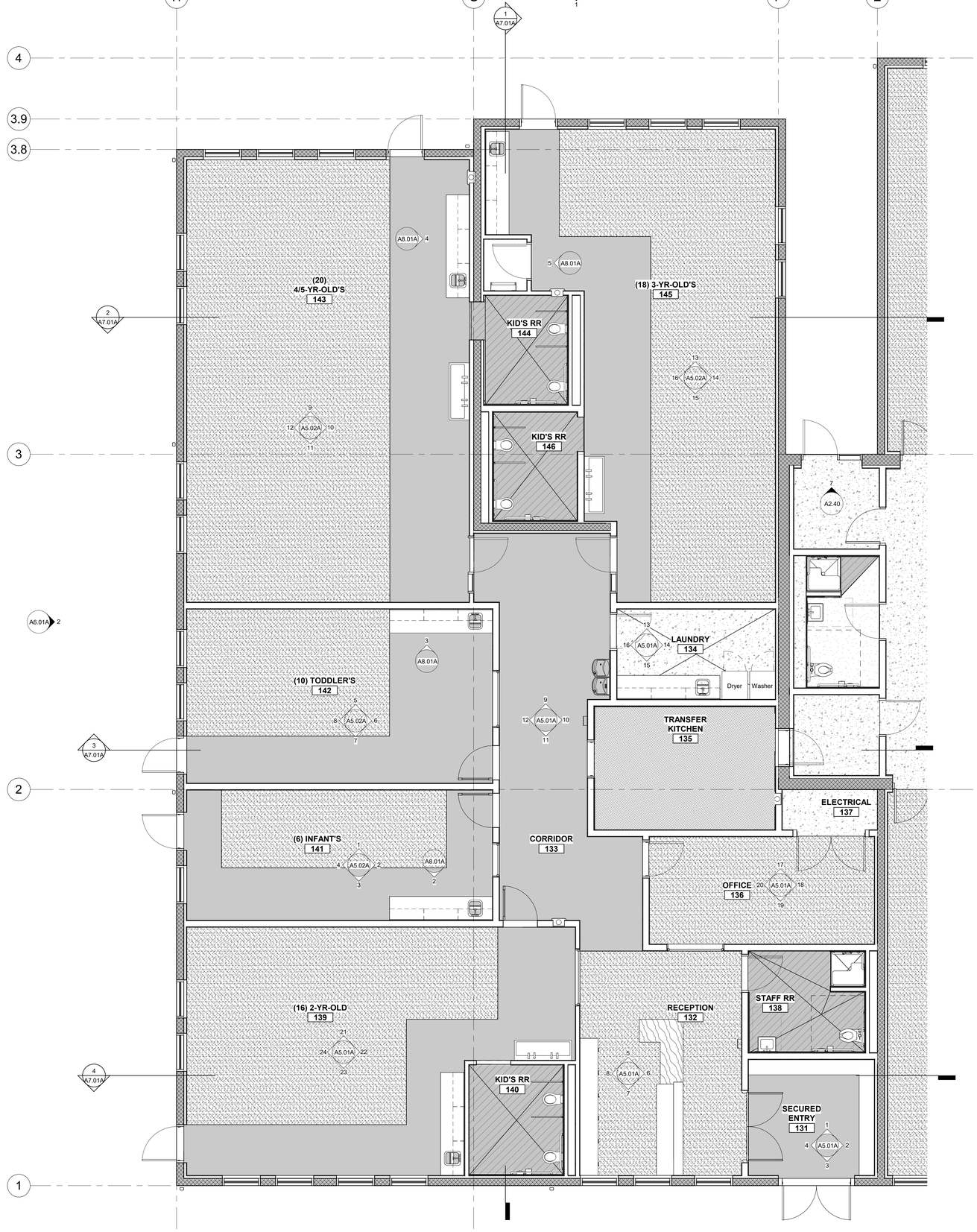

1 FINISH PLAN - ALT. A
SCALE: 1/4" = 1'-0"

NORTH 0' 4' 8' 16'

GENERAL NOTES

KEYNOTES

LEGEND

- CARPET TILE (F-1)
- RUBBER FLOORING (F-2)
- RESINOUS FLOORING (F-3)
- EPOXY FLOORING (F-4)
- LVT (F-5)
- SEALED CONCRETE (F-6)
- GYM FLOORING (F-7)

tsk
225 South Arlington Avenue
Reno NV, 89501
phone: 775.857.2949
fax: 775.857.2403
www.tska.com

THESE DRAWINGS AND SPECIFICATIONS ARE THE PROPERTY OF TATE SNYDER KIMSEY ARCHITECTS AND MAY NOT BE REPRODUCED OR USED FOR ANY PURPOSE WITHOUT THE ARCHITECTS WRITTEN CONSENT. AS INSTRUMENTS OF SERVICE, THESE DOCUMENTS ARE NOT FINAL AND READY FOR USE, AND THEREFORE NOT VALID, UNLESS THEY ARE SEALED, SIGNED AND DATED.
Copyright, Ltd 2023

Consultant

PLEASE RECYCLE

Project
CITY OF FERNLEY CRRC

Job No: 21-058.00

Owner
CITY OF FERNLEY

50 % CONSTRUCTION DOCUMENTS

REVISIONS		
REV	DATE	DESCRIPTION

Sheet Title
FINISH PLAN - ALT. A

Date: MARCH 21, 2023
Sheet No:
A1.41A



1 SLAB PLAN - ALT. A
SCALE: 1/4" = 1'-0"

NORTH

GENERAL NOTES

1. ALL DIMENSION ARE TAKEN FROM FACE OF STUD, MASONRY, OR CONCRETE U.N.O.
2. SEE STRUCTURAL, MECHANICAL, PLUMBING, AND ELECTRICAL DRAWINGS FOR ADDITIONAL WORK NOT SHOWN ON THIS DRAWING.
3. SEE ELECTRICAL DRAWINGS FOR INFORMATION ON ELECTRICAL/TELECOM ROOMS.
4. ALL EQUIPMENT (O.F.O.I AND C.F.C.I.), SHALL COMPLY WITH ACCESSIBILITY REQUIREMENTS.

KEYNOTES

1. DEEP FLOOR DRAIN, SEE FOOD SERVICE & PLUMBING DWGS.
2. FLOOR DRAIN, SLOPE PER CODE, SEE PLUMBING DWGS.
3. 4" HIGH CONCRETE CURB, SEE STRUCT. DWGS.
4. FLOOR TRENCH DRAIN, SLOPE PER CODE, SEE PLUMBING DWGS.
5. SHOWER DRAIN, SLOPE PER CODE, SEE PLUMBING DWGS.

LEGEND

- DEPRESSED SLAB - REFER TO PLAN FOR DEPTH
- SLOPED SLAB - REFER TO PLAN FOR SLOPE AND ELEVATIONS
- UNDERSIDE OF SLAB EXPOSED TO EXTERIOR
- FD — FLOOR DRAIN, PROVIDE SLOPES TO DRAIN (1/8" PER 1'-0") - REFER TO PLUMBING DRAWINGS
- CONCRETE CURB - REFER TO PLAN FOR THICKNESS, HEIGHT, AND EXTENTS
- FB — FLOOR BOX - REFER TO ELECTRICAL & LOW VOLTAGE DRAWINGS

1 LEGEND - SLAB PLANS

tsk
225 South Arlington Avenue
Reno NV, 89501
phone: 775.857.2949
fax: 775.857.2403
www.tska.com

THESE DRAWINGS AND SPECIFICATIONS ARE THE PROPERTY OF TATE SNYDER KIMSEY ARCHITECTS AND MAY NOT BE REPRODUCED OR USED FOR ANY PURPOSE WITHOUT THE ARCHITECTS WRITTEN CONSENT.
AS INSTRUMENTS OF SERVICE, THESE DOCUMENTS ARE NOT FINAL AND READY FOR USE, AND THEREFORE NOT VALID, UNLESS THEY ARE SEALED, SIGNED AND DATED.
Copyright, Ltd 2023

Consultant

PLEASE RECYCLE

Project
CITY OF FERNLEY CRRC

Job No: 21-058.00

Owner
CITY OF FERNLEY

50 % CONSTRUCTION DOCUMENTS

REVISIONS		
REV	DATE	DESCRIPTION

Sheet Title
ENLARGED SLAB PLAN - ALT. A

Date: MARCH 21, 2023

Sheet No:
A1.51A

ROOM FINISH SCHEDULE

ROOM NO	ROOM NAME	FLOORING MAT'L	FLOORING BASE	CEILING MAT'L	WALL NORTH MAT'L	WALL WEST MAT'L	WALL SOUTH MAT'L	WALL EAST MAT'L	COMMENTS
LEVEL 1									
131	SECURED ENTRY	F-1	B-2	C-3	W-1	W-1	W-1	W-5	ALT. A
132	RECEPTION	F-1	B-2	C-3	W-1	W-5	W-1	W-1	ALT. A
133	CORRIDOR	F-1	B-2	C-1	W-5	W-1	W-1	W-1/W-2B	ALT. A
134	LAUNDRY	F-6	B-2	C-3	W-1	W-1	W-1/W-2B	W-1	ALT. A
135	TRANSFER KITCHEN	F-4	B-2	C-3	W-1	W-1	W-1/W-2B	W-1	ALT. A
136	OFFICE	F-1	B-2	C-1	W-1	W-1	W-1	W-1	ALT. A
137	ELECTRICAL	F-6	B-2	-	W-1	W-1	W-1	W-1	ALT. A
138	STAFF RR	F-3	B-4	C-3	W-1/W-2A	W-2A	W-2A	W-1/W-2A	ALT. A
139	(16) 2-YR-OLD	F-1/F-6	B-2	C-1	W-5	W-1	W-1	W-1	ALT. A
140	KID'S RR	F-3	B-4	C-3	W-1	W-1	W-2A	W-2A	ALT. A
141	(6) INFANT'S	F-1/F-6	B-2	C-1	W-5	W-1	W-1/W-2B	W-1	ALT. A
142	(10) TODDLER'S	F-1/F-6	B-2	C-1	W-5/W-2B	W-1	W-1	W-1	ALT. A
143	(20) 4/5-YR-OLD'S	F-1/F-6	B-2	C-1	W-1	W-5	W-1	W-1/W-2B	ALT. A
144	KID'S RR	F-3	B-4	C-3	W-1	W-2	W-2	W-1	ALT. A
145	(18) 3-YR-OLD'S	F-1/F-6	B-2	C-1	W-1	W-1/W-2B	W-1	W-5	ALT. A
146	KID'S RR	F-3	B-4	C-3	W-1	W-2	W-2	W-1	ALT. A
161	UTILITY	F-6	B-2	-	W-1	W-1	W-1	W-1	ALT. A

MATERIAL SCHEDULE

KEY		DESCRIPTION	MANUFACTURER (BASIS OF DESIGN)	MODEL NUMBER	COLOR	REMARKS
FLOORING						SEE FLOOR FINISH PLANS
F-1		CARPET TILE	INTERFACE	AERIAL COLLECTION AE315 - 9.845" x 39.38"	105817 MIST/AQUAMARINE	
F-2		RUBBER FLOORING	NORA BY INTERFACE	NORAPLAN ENVIRONCARE - 24" X 24"	7077 GRADUATION	
F-3		RESINOUS FLOORING	DUR-A-FLEX	ACCELERA C	FIELDSTONE	
F-4		EPOXY FLOORING	STONHARD	STONTEC 6"		
F-5		LVT	INTERFACE	NATURAL WOODGRAINS - 9.845" x 39.38"	A00210 TEAK	INSTALATION PATTERN: HERRINGBONE
F-6		CONCRETE				
F-7		GYM FLOORING	GERFLOR	TARAFLEX MULTI-USE 6.2	6381 MAPLE	
BASE						
B-1		WOOD		4"		
B-2		RUBBER WALL BASE	JOHNSONITE	TRADITIONL VINYL 4" 1/8 VN2	STONE COTTAGE	
B-3		TILE		4"		
B-4		RESINOUS COVE BASE	DUR-A-FLEX	ACCELERA C	FIELDSTONE	RESTROOMS
CEILING						
C-1		ACOUSTIC CEILING TILE	USG	TYPICAL 2' X 2', MARS HIGH CAC; #86186	WHITE TILE/WHITE GRID	GRID USG DX/DXL
C-2		ACOUSTIC CEILING TILE	USG	KITCHEN LAY-IN PANEL CLIMAPLUS PERFORMANCE; #3410 2' x 4'	WHITE TILE/WHITE GRID	GRID USG DX/DXL
C-3		PAINTED GYPSUM BOARD				SEE PAINT COLOR SCHEDULE
C-4		EXPOSED STRUCTURE				SEE PAINT COLOR SCHEDULE
C--W1		WOOD CEILING	ACOUFELT	SOFTENUP CEILING SYSTEM 2'X3' SLATS ON T-BAR CEILING		
WALLS						
W-1		PAINTED GYPSUM BOARD				SEE SEE PAINT SCHEDULE
W-2		TILE				
	A	PORCELAIN TILE	DALTILE	BEE HIVE MEDLEY	SUN GREEN/BLUE P044	
	B	GLAZED PORCELAIN MOSAIC	EMSER	CUADRO 9"X14" W50CUAFRRO0914MOP	ROYAL	CLASSROOM BLACKSPLASH/WATER FOUNTAIN
	C	CERAMIC MOSAIC	EMSER	NEWTRO 12" X 12" W51NEWTNA1212MSKP	NAVY	TEEN CLASSROOM/WATER FOUNTAIN
W-3		WALL PADDING	RUBBER FLOORING INC.	2' X 5' WALL PADS	NAVY BLUE	
W-4		WOOD TILE	TEAKITILES	KAI	LIGHT RUSTIC - 083 OCEANSIDE	WALLMOUNTED/TEAK BACKING
W-5		VINYL GRAPHIC	KOROSEAL	DSO121 EGGSHELL SUBSTRATE	WHITE	CUSTOM GRAPHICS
W-6		PLYWOOD WALL				
W-7		STOREFRONT				
COUNTERTOPS						
SS-1		EVERFORM SOLID SURFACE	FORMICA	505	SEAGLASS	COUNTERTOPS/CLASSROOM
SS-2		EVERFORM SOLID SURFACE	FORMICA	102	ARCTIC	RECEPTION/CHECK IN DESK
PLASTIC LAMINATE						
PL-1		PLASTIC LAMINATE	FORMICA	8910 RAW BIRCHLY	MATTE FINISH	CASEWORK
PL-2		FENIX PLASTIC LAMINATE		JO720 0.8MM	NERO NIGRO	RECEPTION/CHECK IN DESK
WOOD VENEER						
WV-1		WOOD VENEER				

BUILDING MATERIAL SCHEDULE - EXTERIOR

KEY	DESCRIPTION	MANUFACTURER (BASIS OF DESIGN)	MODEL NUMBER	COLOR	REMARKS
CMU					
CMU-1	EXTERIOR CMU	BASELITE			SEE EXTERIOR ELEVATION
	CMU VENEER 1 & 2				
STANDING SEAM ROOF					
SR-1	STANDING SEAM ROOF	AEP SPAN	SPANSEAM		SEE EXTERIOR ELEVATION
WALL PANEL					
WP-1	ARCHITECTURAL WALL PANEL	NICHIHA	WOOD SERIES		SEE EXTERIOR ELEVATION

tsk
225 South Arlington Avenue
Reno NV, 89501
phone: 775.857.2949
fax: 775.857.2403
www.tska.com

THESE DRAWINGS AND SPECIFICATIONS ARE THE PROPERTY OF TATE SNYDER KIMSEY ARCHITECTS AND MAY NOT BE REPRODUCED OR USED FOR ANY PURPOSE WITHOUT THE ARCHITECTS WRITTEN CONSENT. AS INSTRUMENTS OF SERVICE, THESE DOCUMENTS ARE NOT FINAL AND READY FOR USE, AND THEREFORE NOT VALID, UNLESS THEY ARE SEALED, SIGNED AND DATED.

Copyright, Ltd 2023

Consultant

PLEASE RECYCLE

Project
CITY OF FERNLEY CRRC

Job No: 21-058.00

Owner
CITY OF FERNLEY

50 % CONSTRUCTION DOCUMENTS

REVISIONS		
REV	DATE	DESCRIPTION

Sheet Title
MATERIAL FINISH SCHEDULE

Date: MARCH 21, 2023
Sheet No:
A2.00A

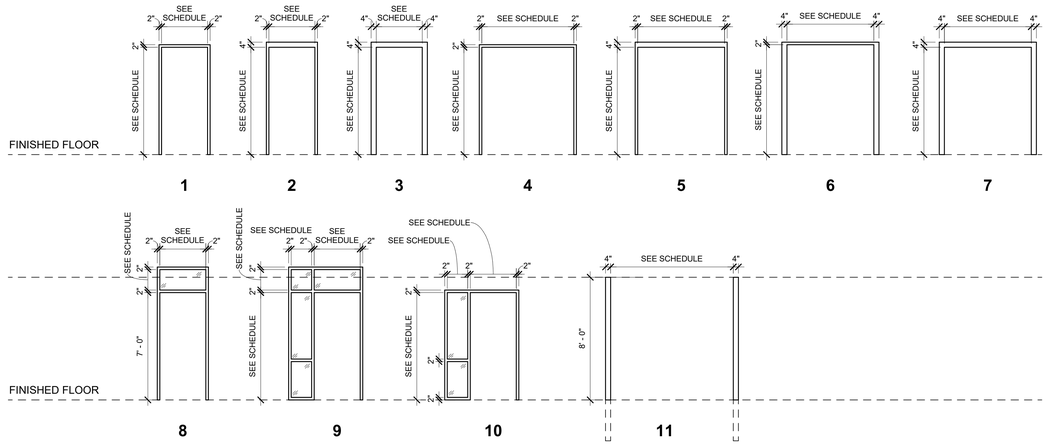

DOOR FRAME TYPES
SCALE: 1/4" = 1'-0"

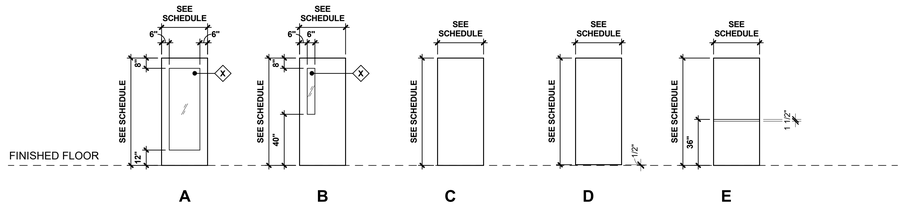

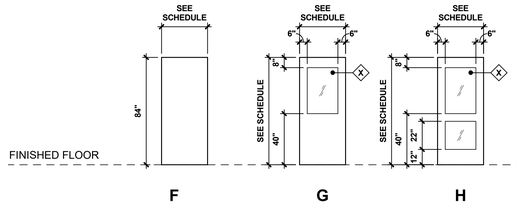

DOOR PANEL TYPES
SCALE: 1/4" = 1'-0"

DOOR SCHEDULE - ALT. A																
			PANEL					FRAME								
			SIZE													
DR. NO.	RM. NO.	PR	W	H	T	TYPE	MAT'L	TYPE	MAT'L	HEAD DTL	SILL DTL	JAMB DTL LATCH	JAMB DTL HINGE	HDWR	LABEL	REMARKS
131A	131		3' - 0"	7' - 0"	1 3/4"	A	AL	8	AL					02		
131B	131		6' - 0"	7' - 0"	0"	A	AL	4	AL					07		ELECTRIFIED OPENING
134	134		3' - 0"	7' - 0"	1 3/4"	C	WD	1	WD					26		
135A	135		3' - 0"	7' - 0"	1 3/4"	B	HM	1	HM					27		
135B	135		3' - 0"	7' - 0"	1 3/4"	B	HM	2	HM					17		
136	136		3' - 0"	7' - 0"	1 3/4"	B	WD	1	WD					31		
137	136	PR	3' - 0"	7' - 0"	1 3/4"	F	WD	4	HM					20		
138	138		3' - 0"	7' - 0"	1 3/4"	C	WD	1	WD					28		
139A	139		3' - 0"	7' - 0"	1 3/4"	A	AL	8	AL					01		
139B	139		3' - 0"	7' - 0"	2"	A	WD	1	WD					24		
141A	141		3' - 0"	7' - 0"	1 3/4"	A	AL	8	AL					01		
141B	141		3' - 0"	7' - 0"	2"	A	WD	1	WD					23		
142A	142		3' - 0"	7' - 0"	1 3/4"	A	AL	8	AL					01		
142B	142		3' - 0"	7' - 0"	2"	A	WD	1	WD					23		
143A	143		3' - 0"	7' - 0"	1 3/4"	A	AL	8	AL					01		
143B	143		3' - 0"	7' - 0"	1 3/4"	A	WD	9	AL					25		
145A	145		3' - 0"	7' - 0"	1 3/4"	A	AL	8	AL					01		
145B	145		3' - 0"	7' - 0"	1 3/4"	A	WD	9	AL					25		
161	161		3' - 0"	7' - 0"	1 3/4"	C	WD	1	WD					16		

tsk
225 South Arlington Avenue
Reno NV, 89501
phone: 775.857.2949
fax: 775.857.2403
www.tska.com

THESE DRAWINGS AND SPECIFICATIONS ARE THE PROPERTY OF TATE SNYDER KIMSEY ARCHITECTS AND MAY NOT BE REPRODUCED OR USED FOR ANY PURPOSE WITHOUT THE ARCHITECTS WRITTEN CONSENT. AS INSTRUMENTS OF SERVICE, THESE DOCUMENTS ARE NOT FINAL AND READY FOR USE, AND THEREFORE NOT VALID, UNLESS THEY ARE SEALED, SIGNED AND DATED.
Copyright, Ltd 2023

Consultant

PLEASE RECYCLE

Project
CITY OF FERNLEY CRRC

Job No: 21-058.00

Owner
CITY OF FERNLEY

50 % CONSTRUCTION DOCUMENTS

REVISIONS		
REV	DATE	DESCRIPTION

Sheet Title
DOOR SCHEDULE - ALT. A

Date: MARCH 21, 2023
Sheet No:
A2.10A

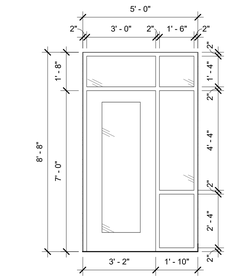

4 TYPE K - ALT. A
SCALE: 3/8" = 1'-0"

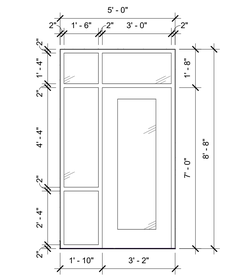

3 TYPE J - ALT. A
SCALE: 3/8" = 1'-0"

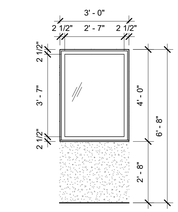

2 TYPE I - ALT. A
SCALE: 3/8" = 1'-0"

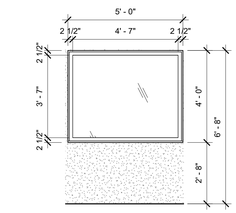

1 TYPE H - ALT. A
SCALE: 3/8" = 1'-0"

tsk
225 South Arlington Avenue
Reno NV, 89501
phone: 775.857.2949
fax: 775.857.2403
www.tska.com

THESE DRAWINGS AND SPECIFICATIONS ARE THE PROPERTY OF TATE SNYDER KIMSEY ARCHITECTS AND MAY NOT BE REPRODUCED OR USED FOR ANY PURPOSE WITHOUT THE ARCHITECTS WRITTEN CONSENT.
AS INSTRUMENTS OF SERVICE, THESE DOCUMENTS ARE NOT FINAL AND READY FOR USE, AND THEREFORE NOT VALID, UNLESS THEY ARE SEALED, SIGNED AND DATED.
Copyright, Ltd 2023

Consultant

PLEASE RECYCLE

Project
CITY OF FERNLEY CRRC

Job No: 21-058.00

Owner
CITY OF FERNLEY

50 % CONSTRUCTION DOCUMENTS

REVISIONS		
REV	DATE	DESCRIPTION

Sheet Title
WINDOW SCHEDULE - ALT. A

Date: MARCH 21, 2023
Sheet No:
A2.40A

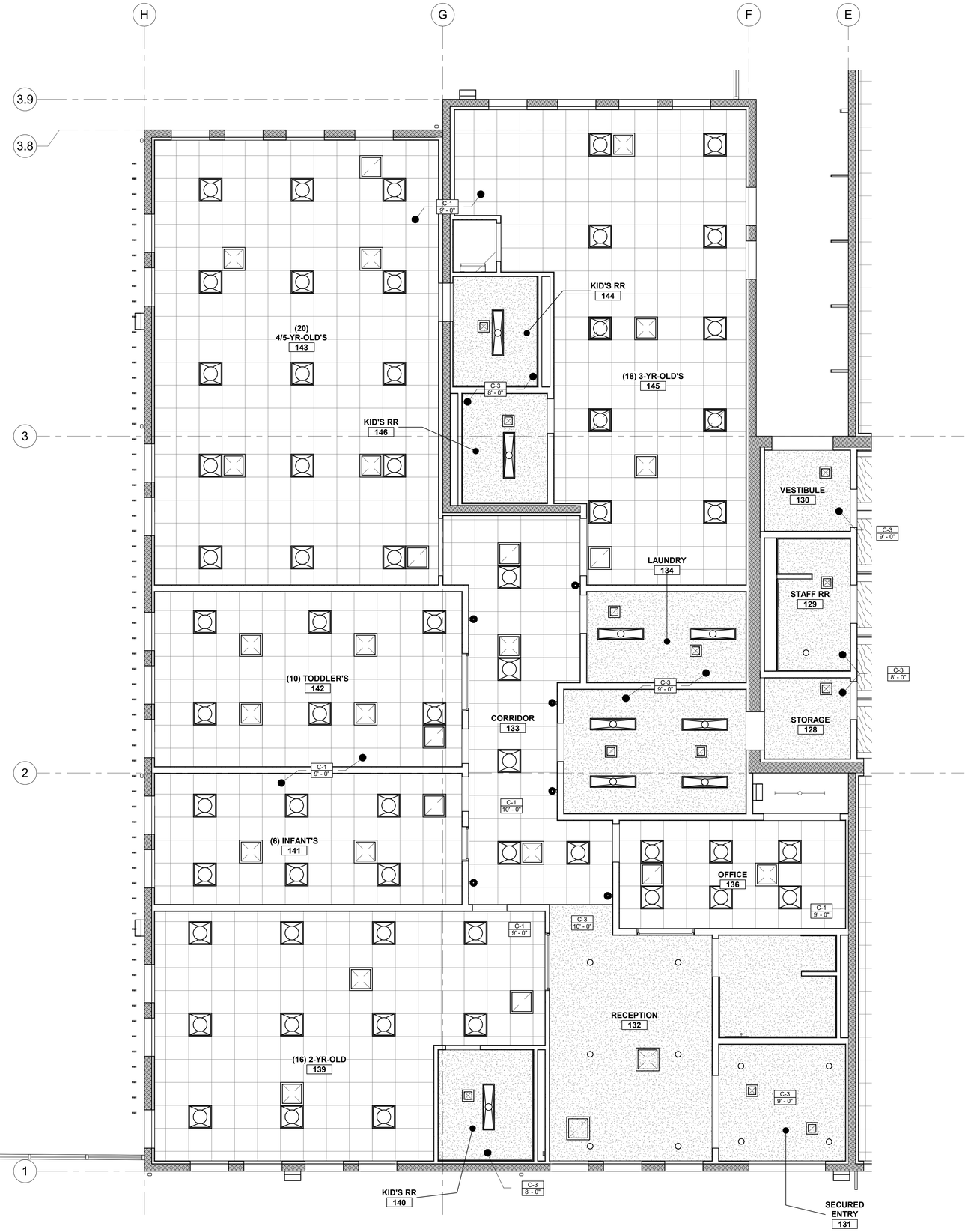

1 REFLECTED CEILING PLAN - ALT. A
SCALE: 1/4" = 1'-0"

NORTH

GENERAL NOTES

1. SEE FINISH SCHEDULE FOR CEILING HEIGHTS AND FINISHES NOT SHOWN ON PLAN.
2. SPRINKLER HEADS TO BE CENTERED IN ALL CORRIDORS AND IN CEILING TILES WHERE TILES OCCUR.
3. MAINTAIN MINIMUM 3" CLEAR BETWEEN LIGHTS, DIFFUSERS, SPEAKERS, ETC.
4. CEILING/SOFFITS ELEVATIONS ARE BASED FROM FINISH FLOOR ELEVATIONS.
5. SEE FINISH SCHEDULE FOR EXPOSED STRUCTURE TO BE PAINTED.

KEYNOTES

1. PAINTED GYP. BD. CEILING, SEE ROOM FINISH SCHEDULE.
2. PAINTED STRUCTURAL FRAMING, SEE STRUCTURAL DWGS.
3. ROOF ACCESS LADDER, SEE ROOF DETAILS

LEGEND

- GYP — FINISH TAG
- ACT 12' - 0" — CEILING TAG
- 24" x 24" ACOUSTIC CEILING TILE
- 24" x 48" ACOUSTIC CEILING TILE
- WOOD CEILING
- FRAMED GYPSUM BOARD CEILING, SEE FINISH SCHEDULE
- EXPOSED STRUCTURE, SEE STRUCTURAL DETAILS.
- DIFUSER
- RETURN
- LIGHT FIXTURE
- LINEAR LIGHT FIXTURE
- SCONCE

tsk
225 South Arlington Avenue
Reno NV, 89501
phone: 775.857.2949
fax: 775.857.2403
www.tska.com

THESE DRAWINGS AND SPECIFICATIONS ARE THE PROPERTY OF TATE SNYDER KIMSEY ARCHITECTS AND MAY NOT BE REPRODUCED OR USED FOR ANY PURPOSE WITHOUT THE ARCHITECTS WRITTEN CONSENT.
AS INSTRUMENTS OF SERVICE, THESE DOCUMENTS ARE NOT FINAL AND READY FOR USE, AND THEREFORE NOT VALID, UNLESS THEY ARE SEALED, SIGNED AND DATED.
Copyright, Ltd 2023

Consultant

PLEASE RECYCLE

Project
CITY OF FERNLEY CRRC

Job No: 21-058.00

Owner
CITY OF FERNLEY

50 % CONSTRUCTION DOCUMENTS

REVISIONS		
REV	DATE	DESCRIPTION

Sheet Title
REFLECTED CEILING PLAN - ALT. A

Date: MARCH 21, 2023
Sheet No:
A3.01A

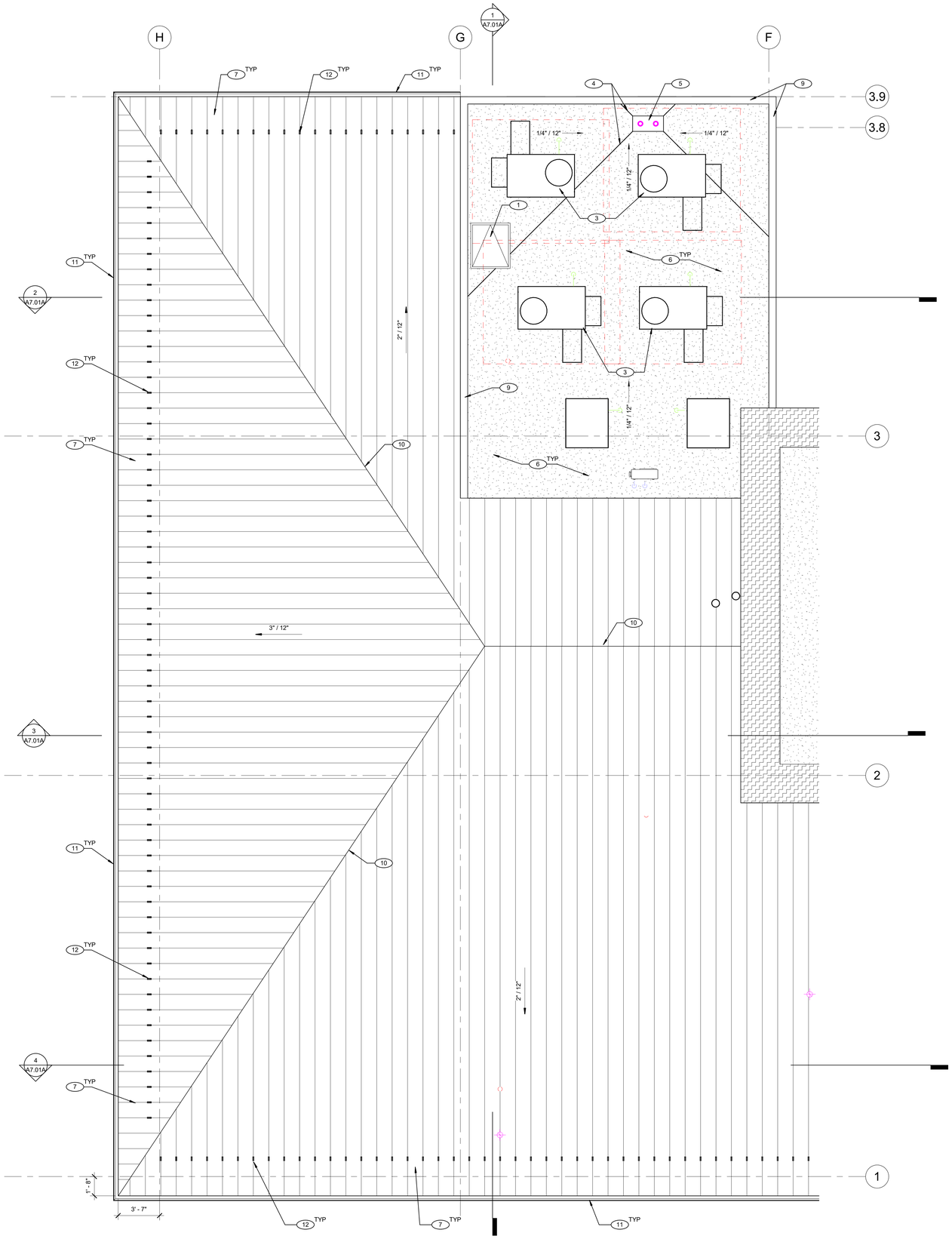

1 ROOF PLAN - ALT. A
SCALE: 1/4" = 1'-0"

NORTH

GENERAL NOTES

1. REFER TO MECH. DWGS FOR ROOF TOP MECH EQUIPMENTS.
2. SEE EXTERIOR ELEVATIONS FOR TOP OF WALL ELEVATIONS.
3. ALL ROOF DRAINS SHALL BE A MIN. OF 2'-0" CLEAR FROM ALL PARAPETS OR WALLS.
4. DIRECTIONAL ARROW ON ROOF PLAN INDICATE DIRECTION OF ROOF SLOPE TO ROOF DRAIN.
5. ALL MAIN ROOF DRAINS SHALL BE LOCATED AT THE LOWEST POSSIBLE ROOF ELEVATIONS. NOTIFY THE ARCHITECT OF ANY CONFLICTS PRIOR TO ROOF DRAIN AND PIPING INSTALLATION.
6. CRICKETS ALL ROOF MECHANICAL UNITS, HATCHES, ETC.. SLOPE MIN. 1/2" PER FOOT.
7. THERE ARE TO BE NO FLAT SPOTS ON THE ROOF. ALL AREAS SHALL BE SLOPED.
8. PROVIDED 3'-0" X 3'-0" TRAFFIC PAD AT TOP AND BOTTOM OF EACH ROOF LADDER.
9. TYPICAL PIPE PENETRATIONS, SEE DETAIL XX/AX.XX

KEYNOTES

1. ROOF HATCH, SEE 1/A4.21
2. ROOF CROSSOVER LADDER, SEE ROOF DETAILS.
3. MECHANICAL UNITS & CURBS, SEE MECH. DWGS.
4. ROOF CRICKETS, SEE ROOF DETAILS
5. ROOF DRAINS, SEE ROOF DETAILS
6. TPO ROOFING WITH 5" ROOF INSULATION. SEE ROOF DWGS.
7. STANDING SEAM & INSULATION. SEE ROOF PLANS.
8. CMU VENEER ROOF SOFFIT, SEE ROOF DETAILS.
9. PRECAST CONCRETE PARAPET CAP. SEE ROOF DETAILS.
10. ROOF RIDIGLINE
11. METAL GUTTER W/ SLOPE TO DRAIN PIPES.
12. SNOW/ICE GUARD. SEE SPECIFICATIONS.
13. STANDING SEAM ROOF. SEE ROOF PLANS.
14. METAL PANEL ROOF SOFFIT, SEE ROOF DETAILS.
15. STANDING SEAM VALLEY, SEE ROOF DETAILS.
16. STANDING SEAM O/TRASH CAN WASH. SEE ROOF DETAILS

LEGEND

KEYPLAN

tsk
225 South Arlington Avenue
Reno NV, 89501
phone: 775.857.2949
fax: 775.857.2403
www.tska.com

THESE DRAWINGS AND SPECIFICATIONS ARE THE PROPERTY OF TATE SNYDER KIMSEY ARCHITECTS AND MAY NOT BE REPRODUCED OR USED FOR ANY PURPOSE WITHOUT THE ARCHITECTS WRITTEN CONSENT. AS INSTRUMENTS OF SERVICE, THESE DOCUMENTS ARE NOT FINAL AND READY FOR USE, AND THEREFORE NOT VALID, UNLESS THEY ARE SEALED, SIGNED AND DATED.

Copyright, Ltd 2023

Consultant

PLEASE RECYCLE

Project
CITY OF FERNLEY CRRC

Job No: 21-058.00

Owner
CITY OF FERNLEY

50 % CONSTRUCTION DOCUMENTS

REVISIONS		
REV	DATE	DESCRIPTION

Sheet Title
ROOF PLAN - ALT. A

Date: MARCH 21, 2023
Sheet No:
A4.01A

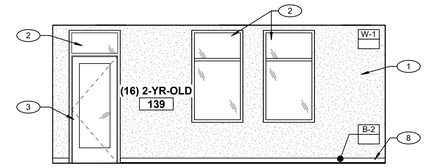

24 2 YR OLD 139 WEST
SCALE: 1/4" = 1'-0"

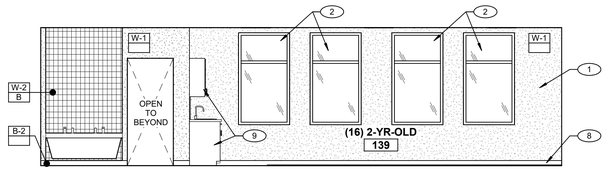

23 2 YR OLD 139 SOUTH
SCALE: 1/4" = 1'-0"

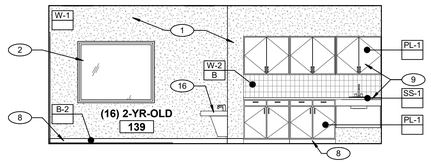

22 2 YR OLD 139 EAST
SCALE: 1/4" = 1'-0"

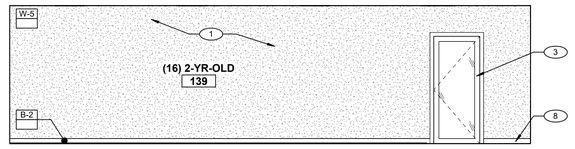

21 2 YR OLD 139 NORTH
SCALE: 1/4" = 1'-0"

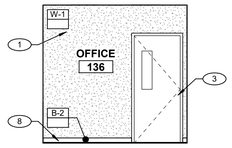

20 OFFICE 136 WEST
SCALE: 1/4" = 1'-0"

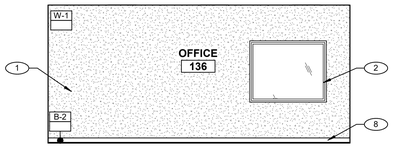

19 OFFICE 136 SOUTH
SCALE: 1/4" = 1'-0"

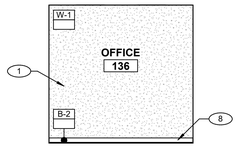

18 OFFICE 136 EAST
SCALE: 1/4" = 1'-0"

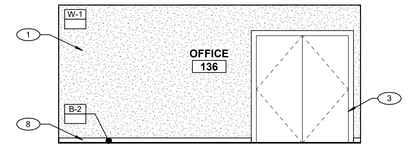

17 OFFICE 136 NORTH
SCALE: 1/4" = 1'-0"

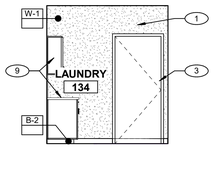

16 LAUNDRY 134 WEST
SCALE: 1/4" = 1'-0"

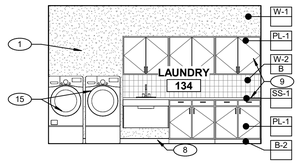

15 LAUNDRY 134 SOUTH
SCALE: 1/4" = 1'-0"

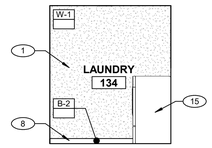

14 LAUNDRY 134 EAST
SCALE: 1/4" = 1'-0"

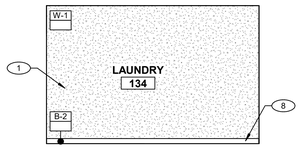

13 LAUNDRY 134 NORTH
SCALE: 1/4" = 1'-0"

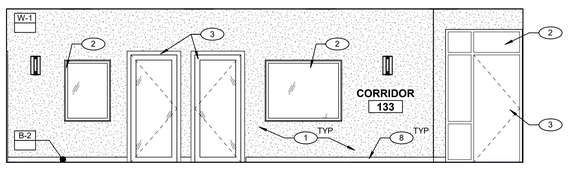

12 CORRIDOR 133 WEST
SCALE: 1/4" = 1'-0"

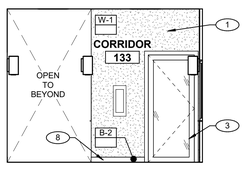

11 CORRIDOR 133 SOUTH
SCALE: 1/4" = 1'-0"

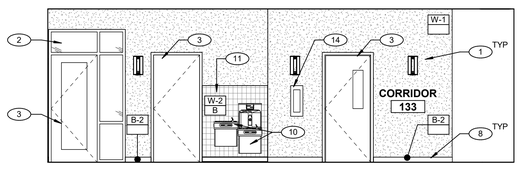

10 CORRIDOR 133 EAST
SCALE: 1/4" = 1'-0"

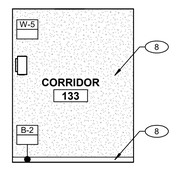

9 CORRIDOR 133 NORTH
SCALE: 1/4" = 1'-0"

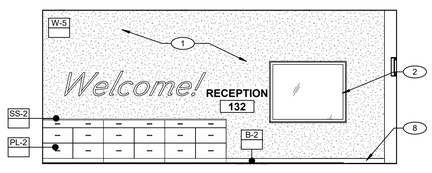

8 RECEPTION 132 WEST
SCALE: 1/4" = 1'-0"

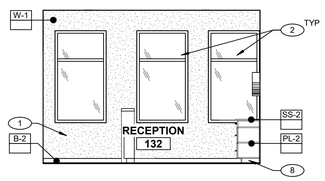

7 RECEPTION 132 SOUTH
SCALE: 1/4" = 1'-0"

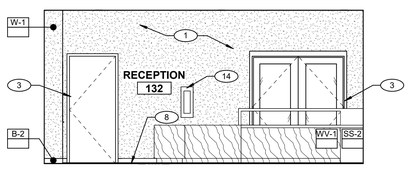

6 RECEPTION 132 EAST
SCALE: 1/4" = 1'-0"

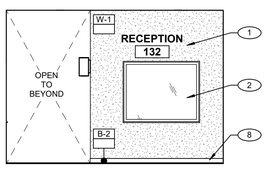

5 RECEPTION 132 NORTH
SCALE: 1/4" = 1'-0"

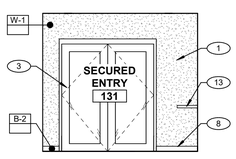

4 SECURED ENTRY 131 WEST
SCALE: 1/4" = 1'-0"

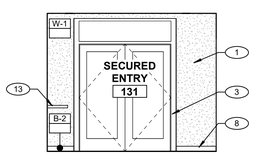

3 SECURED ENTRY 131 SOUTH
SCALE: 1/4" = 1'-0"

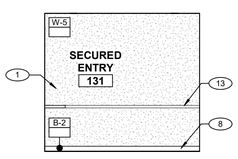

2 SECURED ENTRY 131 EAST
SCALE: 1/4" = 1'-0"

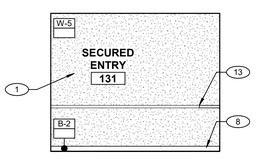

1 SECURED ENTRY 131 NORTH
SCALE: 1/4" = 1'-0"

GENERAL NOTES

KEYNOTES

1	PAINTED GYP. BD., SEE FINISH SCHEDULE.
2	WINDOW SYSTEM, SEE WINDOW SCHEDULE.
3	DOOR AND FRAME, SEE DOOR SCHEDULE.
4	WOOD BASE, SEE FINISH SCHEDULE.
5	LIGHT FIXTURE, SEE ELECTRICAL DWGS.
6	PAINTED STRUCTURAL FRAMING, SEE STRUCTURAL DWGS.
7	WOOD CEILING SYSTEM, SEE CEILING AND ROOM FINISH SCHEDULE.
8	RUBBER BASE, SEE FINISH SCHEDULE.
9	CASEWORK AND COUNTERTOP, SEE CASEWORK DETAILS.
10	ADA DRINKING FOUNTAIN AND WATER BOTTLE FILLER.
11	TILE WALL, SEE ROOM FINISH SCHEDULE.
12	PAINTED CMU WALL, SEE ROOM FINISH SCHEDULE.
13	DISPLAY CASEWORK
14	FIRE EXTINGUISHER & CABINET.
15	WASHER & DRYER,OFCI.
16	TWO STATION LAVATORY
17	ROOF ACCESS LADDER, SEE ROOF DETAILS
18	EXPOSED STEEL COLUMN, SEE STRUCT. DWGS.
19	ROOF TRUSS FRAMING, SEE STRUCT. DWGS.
20	GYM WALL PADDING.

LEGEND

tsk
225 South Arlington Avenue
Reno NV, 89501
phone: 775.857.2949
fax: 775.857.2403
www.tska.com

THESE DRAWINGS AND SPECIFICATIONS ARE THE PROPERTY OF TATE SNYDER KIMSEY ARCHITECTS AND MAY NOT BE REPRODUCED OR USED FOR ANY PURPOSE WITHOUT THE ARCHITECTS WRITTEN CONSENT. AS INSTRUMENTS OF SERVICE, THESE DOCUMENTS ARE NOT FINAL AND READY FOR USE, AND THEREFORE NOT VALID, UNLESS THEY ARE SEALED, SIGNED AND DATED.
Copyright, Ltd 2023

Consultant

PLEASE RECYCLE

Project
CITY OF FERNLEY CRRC

Job No: 21-058.00
Owner
CITY OF FERNLEY

50 % CONSTRUCTION DOCUMENTS

REVISIONS

REV	DATE	DESCRIPTION

Sheet Title
INTERIOR ELEVATIONS - ALT. A

Date: MARCH 21, 2023
Sheet No:
A5.01A

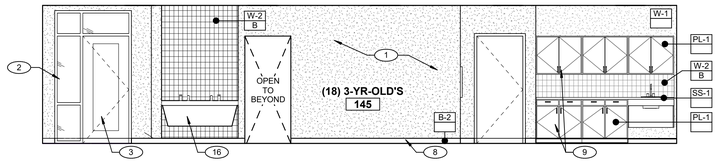

16 3 YR OLD 145 WEST
SCALE: 1/4" = 1'-0"

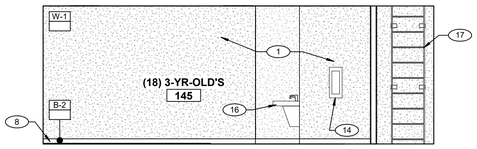

15 3 YR OLD 145 SOUTH
SCALE: 1/4" = 1'-0"

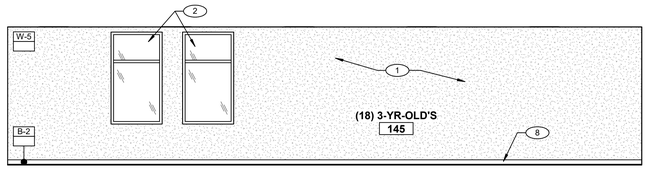

14 3 YR OLD 145 EAST
SCALE: 1/4" = 1'-0"

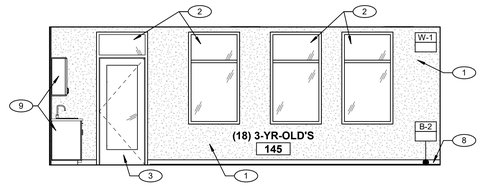

13 3 YR OLD 145 NORTH
SCALE: 1/4" = 1'-0"

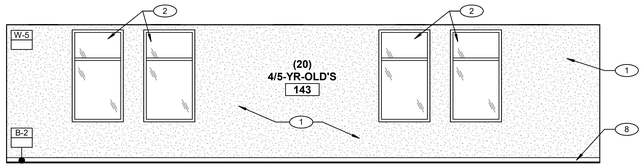

12 4/5 YR OLD 143 WEST
SCALE: 1/4" = 1'-0"

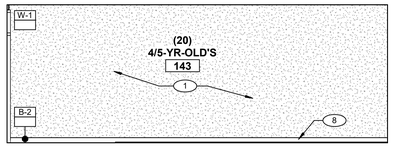

11 4/5 YR OLD 143 SOUTH
SCALE: 1/4" = 1'-0"

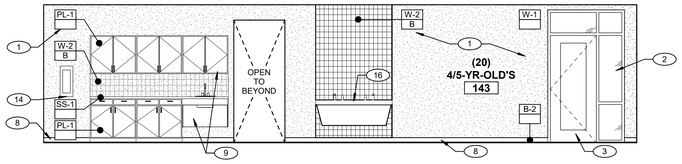

10 4/5 YR OLD 143 EAST
SCALE: 1/4" = 1'-0"

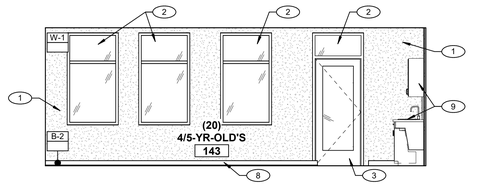

9 4/5 YEAR OLD 143 NORTH
SCALE: 1/4" = 1'-0"

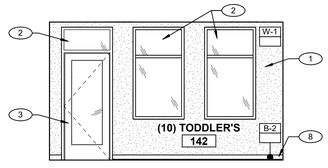

8 TODDLERS 142 WEST
SCALE: 1/4" = 1'-0"

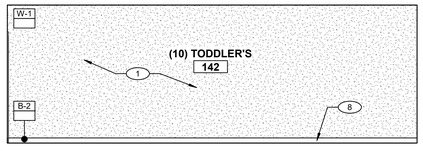

7 TODDLERS 142 SOUTH
SCALE: 1/4" = 1'-0"

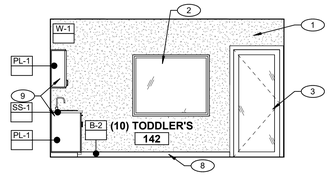

6 TODDLERS 142 EAST
SCALE: 1/4" = 1'-0"

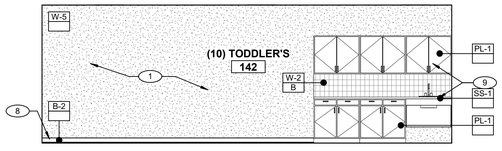

5 TODDLERS 142 NORTH
SCALE: 1/4" = 1'-0"

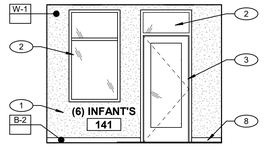

4 INFANTS 141 WEST
SCALE: 1/4" = 1'-0"

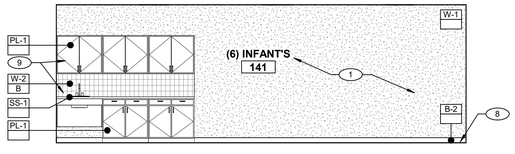

3 INFANTS 141 SOUTH
SCALE: 1/4" = 1'-0"

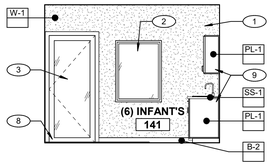

2 INFANTS 141 EAST
SCALE: 1/4" = 1'-0"

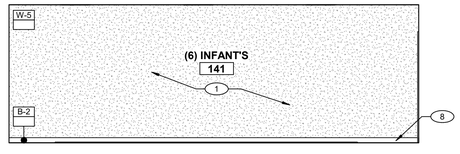

1 INFANTS 141 NORTH
SCALE: 1/4" = 1'-0"

GENERAL NOTES

KEYNOTES

1	PAINTED GYP. BD., SEE FINISH SCHEDULE.
2	WINDOW SYSTEM, SEE WINDOW SCHEDULE.
3	DOOR AND FRAME, SEE DOOR SCHEDULE.
4	WOOD BASE, SEE FINISH SCHEDULE.
5	LIGHT FIXTURE, SEE ELECTRICAL DWGS.
6	PAINTED STRUCTURAL FRAMING, SEE STRUCTURAL DWGS.
7	WOOD CEILING SYSTEM. SEE CEILING AND ROOM FINISH SCHEDULE.
8	RUBBER BASE, SEE FINISH SCHEDULE.
9	CASEWORK AND COUNTERTOP, SEE CASEWORK DETAILS.
10	ADA DRINKING FOUNTAIN AND WATER BOTTLE FILLER.
11	TILE WALL, SEE ROOM FINISH SCHEDULE.
12	PAINTED CMU WALL, SEE ROOM FINISH SCHEDULE.
13	DISPLAY CASEWORK.
14	FIRE EXTINGUISHER & CABINET.
15	WASHER & DRYER.OFCI.
16	TWO STATION LAVATORY
17	ROOF ACCESS LADDER, SEE ROOF DETAILS
18	EXPOSED STEEL COLUMN, SEE STRUCT. DWGS.
19	ROOF TRUSS FRAMING, SEE STRUCT. DWGS.
20	GYM WALL PADDING.

LEGEND

tsk
225 South Arlington Avenue
Reno NV, 89501
phone: 775.857.2949
fax: 775.857.2403
www.tska.com

THESE DRAWINGS AND SPECIFICATIONS ARE THE PROPERTY OF TATE SNYDER KIMSEY ARCHITECTS AND MAY NOT BE REPRODUCED OR USED FOR ANY PURPOSE WITHOUT THE ARCHITECTS WRITTEN CONSENT. AS INSTRUMENTS OF SERVICE, THESE DOCUMENTS ARE NOT FINAL AND READY FOR USE, AND THEREFORE NOT VALID, UNLESS THEY ARE SEALED, SIGNED AND DATED.

Copyright, Ltd 2023

Consultant

PLEASE RECYCLE

Project
CITY OF FERNLEY CRRC

Job No: 21-058.00

Owner
CITY OF FERNLEY

50 % CONSTRUCTION DOCUMENTS

REVISIONS

REV	DATE	DESCRIPTION

Sheet Title
INTERIOR ELEVATIONS - ALT. A

Date: MARCH 21, 2023
Sheet No:
A5.02A

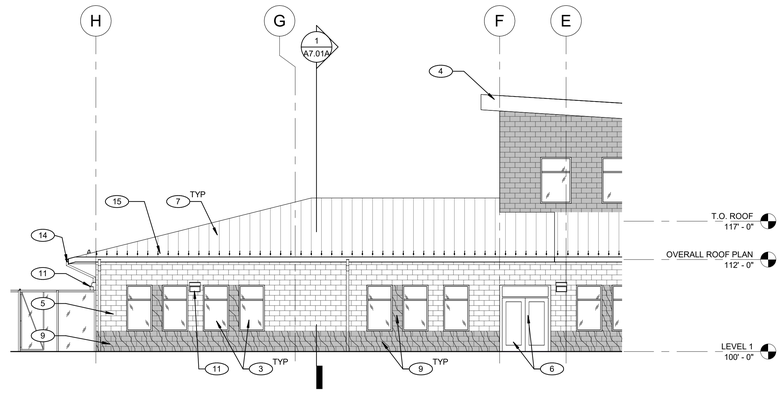

3 EXTERIOR SOUTH EARLY LEARNING
SCALE: 1/8" = 1'-0"

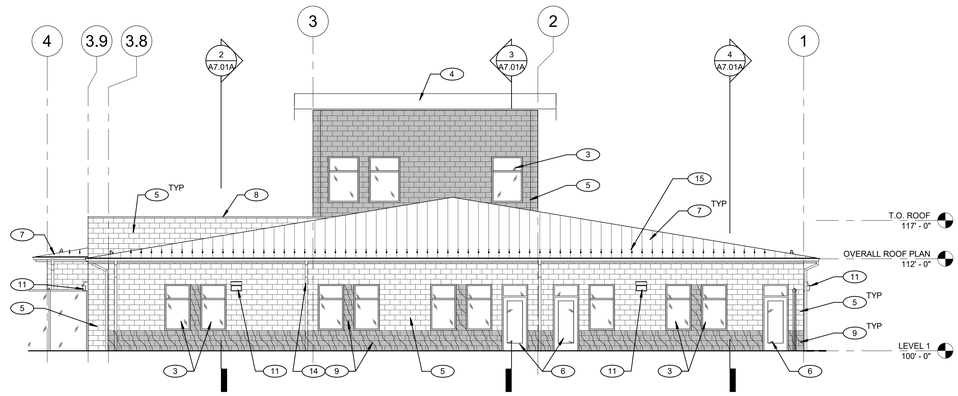

2 EXTERIOR WEST EARLY LEARNING
SCALE: 1/8" = 1'-0"

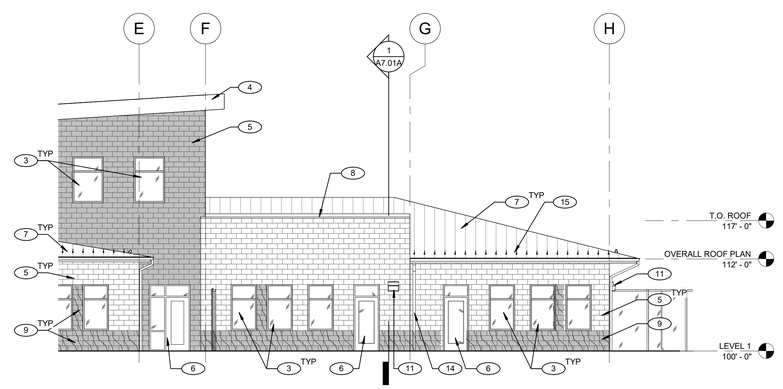

1 EXTERIOR NORTH EARLY LEARNING
SCALE: 1/8" = 1'-0"

GENERAL NOTES

1. ALL FLOOR AND (T.O.) PARAPET ELEVATIONS SHOWN ARE TAKEN FROM ED LEVEL WHICH IS EQUAL 100'-0". CIVIL FINISH FLOOR LEVEL XXXX.XX
2. ALL EXPOSED MASONRY TO RECEIVE GRAFFITI COATING, INCLUDING ALL SITE WALLS.
3. SEE SHEET AX.XX FOR MATERIAL FINISH INFORMATION.
4. SEE ARCHITECTURAL SITE SHEETS FOR RETAINING WALLS, SITE STAIRS, AND SITE PLANTERS.

KEYNOTES

1. PAINTED METAL GATE & SUPPORTS, SEE DOOR SCHEDULE
2. ROOF ACCESS LADDER, SEE ROOF DETAILS
3. WINDOW SYSTEM, SEE WINDOW SCHEDULE.
4. METAL PANEL SYSTEM, SEE DETAIL X/AX.XX
5. CMU WALL, SEE LEGEND FOR TYPE.
6. DOOR AND FRAME, SEE DOOR SCHEDULE.
7. STANDING SEAM ROOF. SEE ROOF PLANS.
8. METAL PARAPET CAP. SEE ROOF DETAILS.
9. WOOD RAIN SCREEN, SEE LEGEND.
10. TPO ROOFING, SEE ROOF PLANS
11. LIGHT FIXTURE, SEE ELECT. DWGS.
12. PAINTED STEEL COLUMN, SEE STRUCTURAL DWGS.
13. CMU STONE VENEER, SEE FINISH SCHEDULE.
14. GUTTER & DOWNSPOUT
15. CLAMP ON SNOW FENCE

LEGEND

- GLAZING
- METAL PANELING
- WOOD RAIN SCREEN
- CMU 1
- CMU 2
- CMU 3
- CMU VENEER

tsk
225 South Arlington Avenue
Reno NV, 89501
phone: 775.857.2949
fax: 775.857.2403
www.tska.com

THESE DRAWINGS AND SPECIFICATIONS ARE THE PROPERTY OF TATE SNYDER KIMSEY ARCHITECTS AND MAY NOT BE REPRODUCED OR USED FOR ANY PURPOSE WITHOUT THE ARCHITECTS WRITTEN CONSENT. AS INSTRUMENTS OF SERVICE, THESE DOCUMENTS ARE NOT FINAL AND READY FOR USE, AND THEREFORE NOT VALID, UNLESS THEY ARE SEALED, SIGNED AND DATED.
Copyright, Ltd 2023

Consultant

PLEASE RECYCLE

Project
CITY OF FERNLEY CRRC

Job No: 21-058.00

Owner
CITY OF FERNLEY

50 % CONSTRUCTION DOCUMENTS

REVISIONS		
REV	DATE	DESCRIPTION

Sheet Title
EXTERIOR ELEVATION - ALT. A

Date: MARCH 21, 2023
Sheet No:
A6.01A

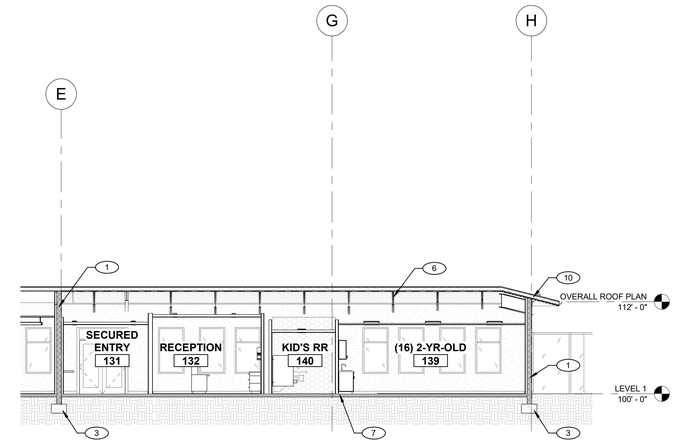

4 Section 11
SCALE: 1/8" = 1'-0"

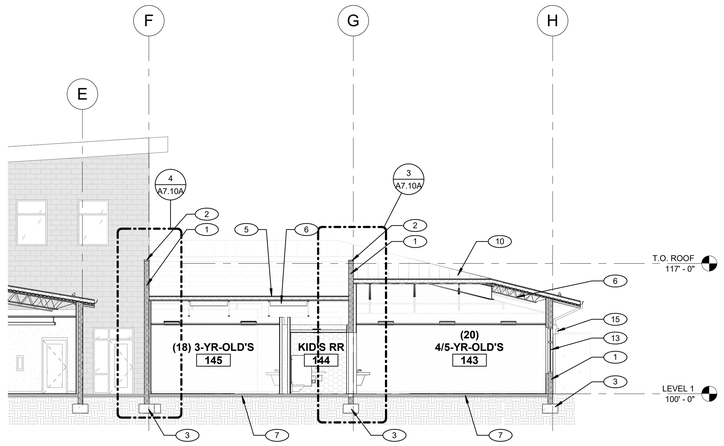

2 Section 9
SCALE: 1/8" = 1'-0"

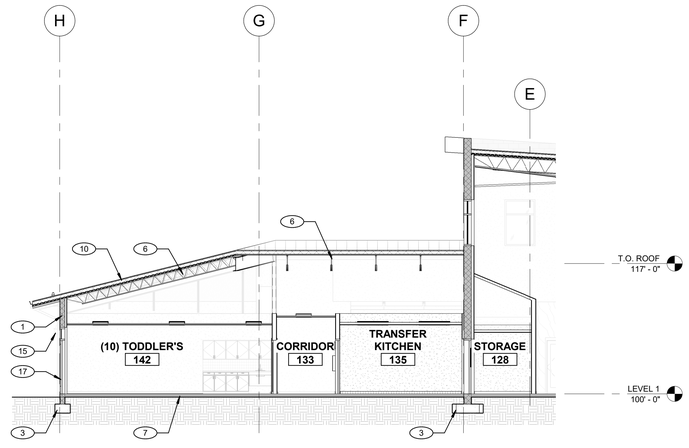

3 Section 10
SCALE: 1/8" = 1'-0"

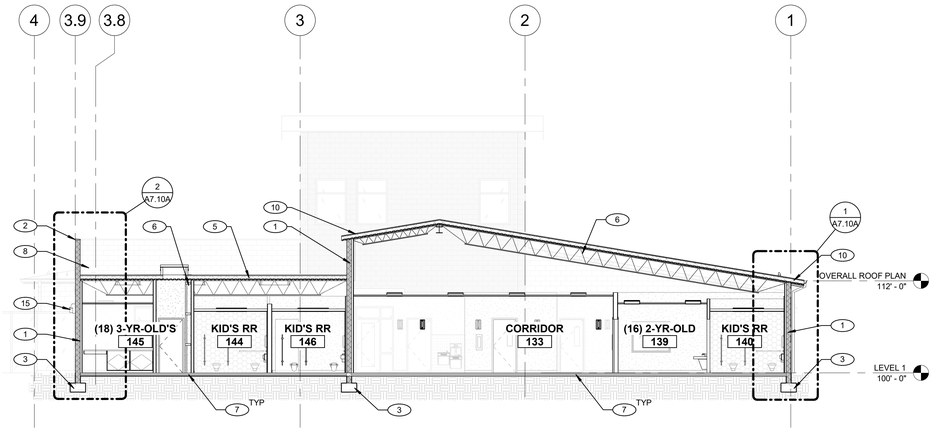

1 Section 8
SCALE: 1/8" = 1'-0"

GENERAL NOTES

1. REFER TO STRUCTURAL DRAWINGS FOR FOOTING AND SLAB REQUIREMENTS.
2. SEE SHEETS A4.XX, ROOF PLAN AND ROOF DETAILS.
3. REFER TO FLOOR PLANS FOR PARTITION TYPES.
4. PAINT ALL EXPOSED INTERIOR AND EXTERIOR STRUCTURAL STEEL - SEE FINISH SCHEDULE AND ELEVATIONS.
5. REFER TO FINISH SCHEDULE FOR FLOOR, WALL, AND CEILING FINISHES.
6. SEE ELEVATIONS FOR CMU COLOR AND TEXTURE.
7. ALL PENETRATIONS THROUGH WALLS WITH SOUND INSULATION SHALL BE SEALED TIGHT WITH ACOUSTICAL INSULATION AND SEALANT.
8. ALL FLOOR AND (T.O.) PARAPET ELEVATIONS SHOWN ARE TAKEN FROM ED LEVEL WHICH IS EQUAL 100'-0". CIVIL FINISH FLOOR LEVEL XXXX.XX
9. REFER TO STRUCTURAL DETAILS FOR TYPICAL INTERIOR PARTITION CONNECTIONS.
10. FOR FINISH OF INTERIOR CMU WALLS EXPOSED, SEE FINISH SCHEDULE.

KEYNOTES

1. CMU WALL, SEE LEGEND FOR TYPE.
2. METAL PARAPET CAP. SEE ROOF DETAILS.
3. CONCRETE FOOTINGS, SEE STRUCT. DWGS.
4. 4" WALL FURRING, SEE WALL TYPES.
5. TPO ROOFING, SEE ROOF PLANS
6. STRUCTURAL FRAMING, SEE STRUCT. DWGS.
7. CONCRETE FLOOR SLAB, SEE STRUCT. DWGS.
8. ROOF HATCH, SEE 1/A4.21
9. METAL PANEL SYSTEM, SEE DETAIL X/AX.XX
10. STANDING SEAM ROOF. SEE ROOF PLANS.
11. PAINTED METAL GATE & SUPPORTS, SEE DOOR SCHEDULE
12. ROOF ACCESS LADDER, SEE ROOF DETAILS
13. WINDOW SYSTEM, SEE WINDOW SCHEDULE.
14. WOOD CEILING SYSTEM, SEE CEILING AND ROOM FINISH SCHEDULE.
15. LIGHT FIXTURE, SEE ELECT. DWGS.
16. GYP. BD. SOFFIT, SEE REF. CLG. PLANS.
17. DOOR AND FRAME, SEE DOOR SCHEDULE
18. SLOPED SIDEWALK, SEE CIVIL DWGS.
19. PAINTED STEEL COLUMN, SEE STRUCTURAL DWGS.
20. WOOD RAIN SCREEN, SEE LEGEND.
21. CMU STONE VENEER, SEE FINISH SCHEDULE.
22. FINISH GRADE, SEE CIVIL DWGS.
23. 2 1/2"MTL. STUD WALL FURRING, SEE WALL TYPES.
24. PAINTED GYP. BD., SEE FINISH SCHEDULE
25. ACT LAY IN CEILING, SEE REF. CLG. PLANS
26. WALL PARTITION, SEE FLOOR PLANS FOR WALL TYPES
27. PAINTED GYP. BD. CEILING, SEE ROOM FINISH SCHEDULE.
28. STEEL BEAM, SEE STRUCT. DWGS.

LEGEND

tsk
225 South Arlington Avenue
Reno NV, 89501
phone: 775.857.2949
fax: 775.857.2403
www.tska.com

THESE DRAWINGS AND SPECIFICATIONS ARE THE PROPERTY OF TATE SNYDER KIMSEY ARCHITECTS AND MAY NOT BE REPRODUCED OR USED FOR ANY PURPOSE WITHOUT THE ARCHITECTS WRITTEN CONSENT.
AS INSTRUMENTS OF SERVICE, THESE DOCUMENTS ARE NOT FINAL AND READY FOR USE, AND THEREFORE NOT VALID, UNLESS THEY ARE SEALED, SIGNED AND DATED.
Copyright, Ltd 2023

Consultant

PLEASE RECYCLE

Project
CITY OF FERNLEY CRRC

Job No: 21-058.00

Owner
CITY OF FERNLEY

50 % CONSTRUCTION DOCUMENTS

REVISIONS

REV	DATE	DESCRIPTION

Sheet Title
BUILDING SECTIONS - ALT. A

Date: MARCH 21, 2023
Sheet No:
A7.01A

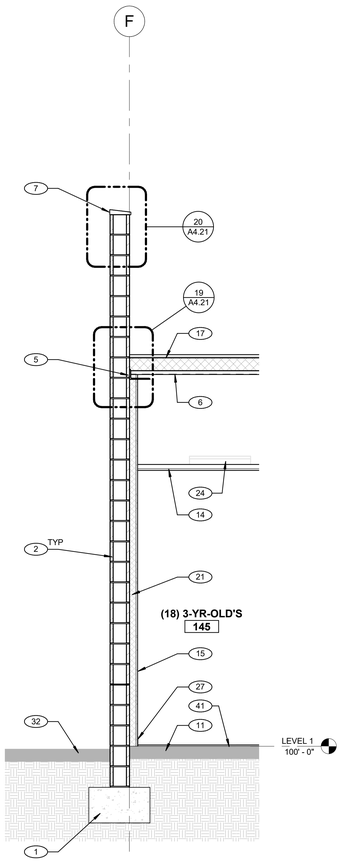

4 WALL SECTION 23 - ALT. A
SCALE: 1/2" = 1'-0"

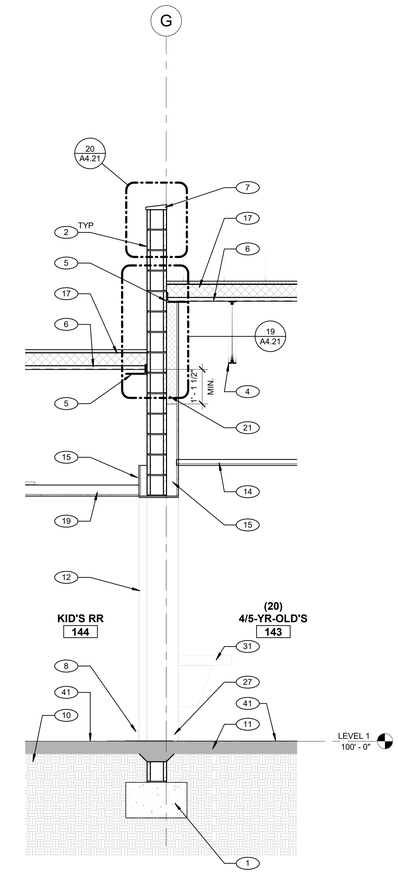

3 WALL SECTION 22 - ALT. A
SCALE: 1/2" = 1'-0"

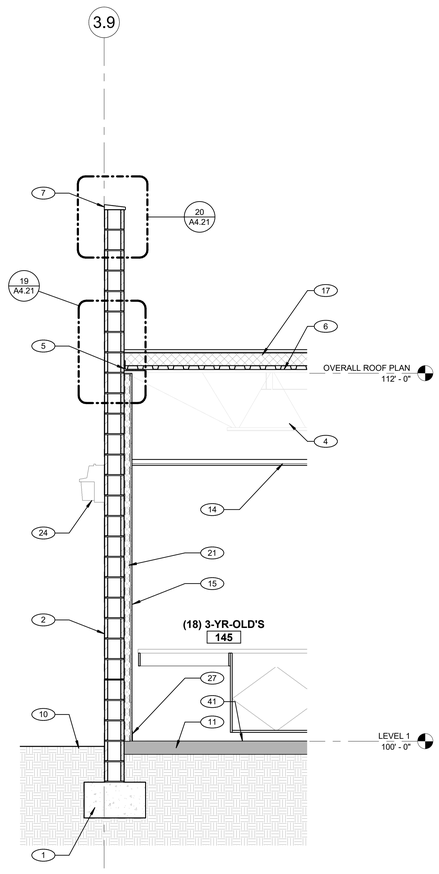

2 WALL SECTION 21 - ALT. A
SCALE: 1/2" = 1'-0"

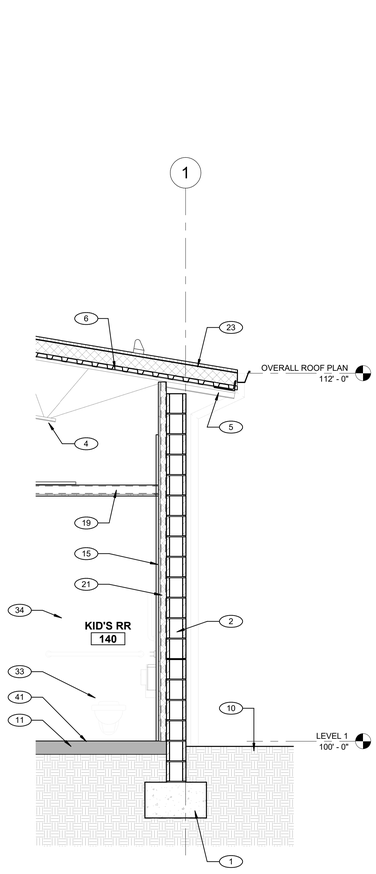

1 WALL SECTION 20 - ALT A
SCALE: 1/2" = 1'-0"

GENERAL NOTES

1. REFER TO STRUCTURAL DRAWINGS FOR FOOTING AND SLAB REQUIREMENTS.
2. SEE SHEETS A4.XX, ROOF PLAN AND ROOF DETAILS.
3. REFER TO FLOOR PLANS FOR PARTITION TYPES.
4. PAINT ALL EXPOSED INTERIOR AND EXTERIOR STRUCTURAL STEEL - SEE FINISH SCHEDULE AND ELEVATIONS.
5. REFER TO FINISH SCHEDULE FOR FLOOR, WALL, AND CEILING FINISHES.
6. SEE ELEVATIONS FOR CMU COLOR AND TEXTURE.
7. ALL PENETRATIONS THROUGH WALLS WITH SOUND INSULATION SHALL BE SEALED TIGHT WITH ACOUSTICAL INSULATION AND SEALANT.
8. ALL FLOOR AND (T.O.) PARAPET ELEVATIONS SHOWN ARE TAKEN FROM ED LEVEL WHICH IS EQUAL 100'-0". CIVIL FINISH FLOOR LEVEL XXXX.XX
9. REFER TO STRUCTURAL DETAILS FOR TYPICAL INTERIOR PARTITION CONNECTIONS.
10. FOR FINISH OF INTERIOR CMU WALLS EXPOSED, SEE FINISH SCHEDULE.

KEYNOTES

1. CONCRETE FOOTINGS, SEE STRUCT. DWGS.
2. 8" CMU WALL, SEE LEGEND FOR TYPE.
3. 3 5/8" MTL STUD WALL FURRING, SEE WALL TYPES.
4. ROOF TRUSS FRAMING, SEE STRUCT. DWGS.
5. STRUCTURAL BENT EDGE PLATE. SEE STRUCT. DWGS
6. STRUCTURAL ROOF DECK, SEE STRUCT. DWGS.
7. PRECAST CONCRETE PARAPET CAP. SEE ROOF DETAILS.
8. TILE WALL BASE, SEE ROOM FINISH SCHEDULE.
9. FRP TEXTURED WALL PANELS, SEE ROOM FINISH SCHEDULE.
10. FINISH GRADE, SEE CIVIL DWGS.
11. CONCRETE FLOOR SLAB, SEE STRUCT. DWGS.
12. WALL PARTITION, SEE FLOOR PLANS FOR WALL TYPES
13. WOOD BASE, SEE FINISH SCHEDULE.
14. ACT LAY IN CEILING, SEE REF. CLG. PLANS
15. 2 1/2" MTL. STUD WALL FURRING, SEE WALL TYPES.
16. 12" CMU WALL, SEE LEGEND FOR TYPE.
17. TPO ROOFING WITH 5" ROOF INSULATION. SEE ROOF DWGS.
18. TILE WALL, SEE ROOM FINISH SCHEDULE.
19. PAINTED GYP. BD. CEILING, SEE ROOM FINISH SCHEDULE.
20. STEEL BEAM, SEE STRUCT. DWGS.
21. RIGID WALL INSULATION, SEE WALL TYPES.
22. METAL PANEL ROOF SOFFIT, SEE ROOF DETAILS.
23. STANDING SEAM & INSULATION. SEE ROOF PLANS.
24. LIGHT FIXTURE, SEE ELECT. DWGS.
25. WOOD CEILING SYSTEM, SEE CEILING AND ROOM FINISH SCHEDULE.
26. WINDOW SYSTEM, SEE WINDOW SCHEDULE.
27. RUBBER BASE, SEE FINISH SCHEDULE.
28. DOOR AND FRAME, SEE DOOR SCHEDULE.
29. PAINTED GYP. BD., SEE FINISH SCHEDULE.
31. TWO STATION LAVATORY
32. SLOPED SIDEWALK, SEE CIVIL DWGS.
33. WATER CLOSET, SEE PLUMBING DWGS.
34. TOILET PARTITION, SEE SPEC'S
35. PAINTED STEEL COLUMN, SEE STRUCTURAL DWGS.
37. 1 1/2" MTL. STUD WALL FURRING, SEE WALL TYPES.
38. WOOD RAIN SCREEN, SEE LEGEND.
39. CMU VENEER ROOF SOFFIT, SEE ROOF DETAILS.
40. BATT INSULATION, SEE SPEC'S.
41. FINISHED FLOORING, SEE ROOM FINISH SCHEDULE.
42. WOOD RAIN SCREEN CEILING.
43. ROOF DRAIN, SEE ROOF DETAILS
44. SNOW/ICE GUARD. SEE SPECIFICATIONS.
45. METAL GUTTER W/ SLOPE TO DRAIN PIPES.
46. ROOF CROSSOVER LADDER, SEE ROOF DETAILS.
47. PAINTED GYP. BD. SOFFIT, SEE CEILING DETAILS
48. EXPANSION JOINT, SEE ROOF DETAIL XX/A4.01

LEGEND

tsk
225 South Arlington Avenue
Reno NV, 89501
phone: 775.857.2949
fax: 775.857.2403
www.tska.com

THESE DRAWINGS AND SPECIFICATIONS ARE THE PROPERTY OF TATE SNYDER KIMSEY ARCHITECTS AND MAY NOT BE REPRODUCED OR USED FOR ANY PURPOSE WITHOUT THE ARCHITECTS WRITTEN CONSENT.
AS INSTRUMENTS OF SERVICE, THESE DOCUMENTS ARE NOT FINAL AND READY FOR USE, AND THEREFORE NOT VALID, UNLESS THEY ARE SEALED, SIGNED AND DATED.
Copyright, Ltd 2023

Consultant

PLEASE RECYCLE

Project
CITY OF FERNLEY CRRC

Job No: 21-058.00

Owner
CITY OF FERNLEY

50 % CONSTRUCTION DOCUMENTS

REVISIONS		
REV	DATE	DESCRIPTION

Sheet Title
WALL SECTION - ALT. A

Date: MARCH 21, 2023
Sheet No:
A7.10A

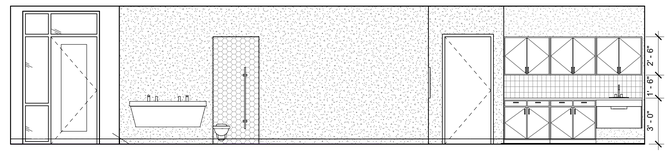

5 CASEWORK AT 3 YR OLD 145 WEST
SCALE: 1/4" = 1'-0"

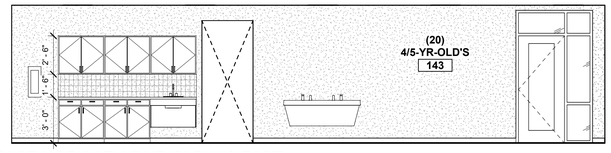

4 CASEWORK AT 4/5 YR OLD 143 EAST
SCALE: 1/4" = 1'-0"

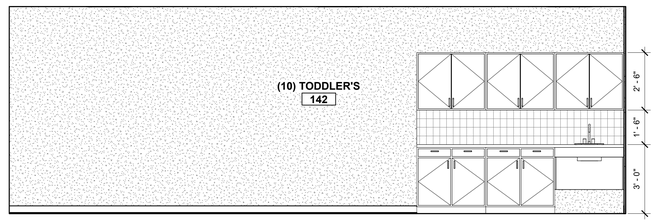

3 CASEWORK AT TODDLERS 142 NORTH
SCALE: 3/8" = 1'-0"

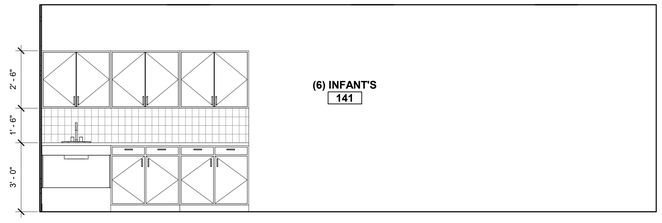

2 CASEWORK AT INFANTS 141 SOUTH
SCALE: 3/8" = 1'-0"

GENERAL NOTES

KEYNOTES

LEGEND

tsk
225 South Arlington Avenue
Reno NV, 89501
phone: 775.857.2949
fax: 775.857.2403
www.tska.com

THESE DRAWINGS AND SPECIFICATIONS ARE THE PROPERTY OF TATE SNYDER KIMSEY ARCHITECTS AND MAY NOT BE REPRODUCED OR USED FOR ANY PURPOSE WITHOUT THE ARCHITECTS WRITTEN CONSENT. AS INSTRUMENTS OF SERVICE, THESE DOCUMENTS ARE NOT FINAL AND READY FOR USE, AND THEREFORE NOT VALID, UNLESS THEY ARE SEALED, SIGNED AND DATED.
Copyright, Ltd 2023

Consultant

PLEASE RECYCLE

Project
CITY OF FERNLEY CRRC

Job No: 21-058.00

Owner
CITY OF FERNLEY

50 % CONSTRUCTION DOCUMENTS

REVISIONS		
REV	DATE	DESCRIPTION

Sheet Title
CASEWORK PLANS AND ELEVATIONS - ALT. A

Date: MARCH 21, 2023
Sheet No:
A8.01A

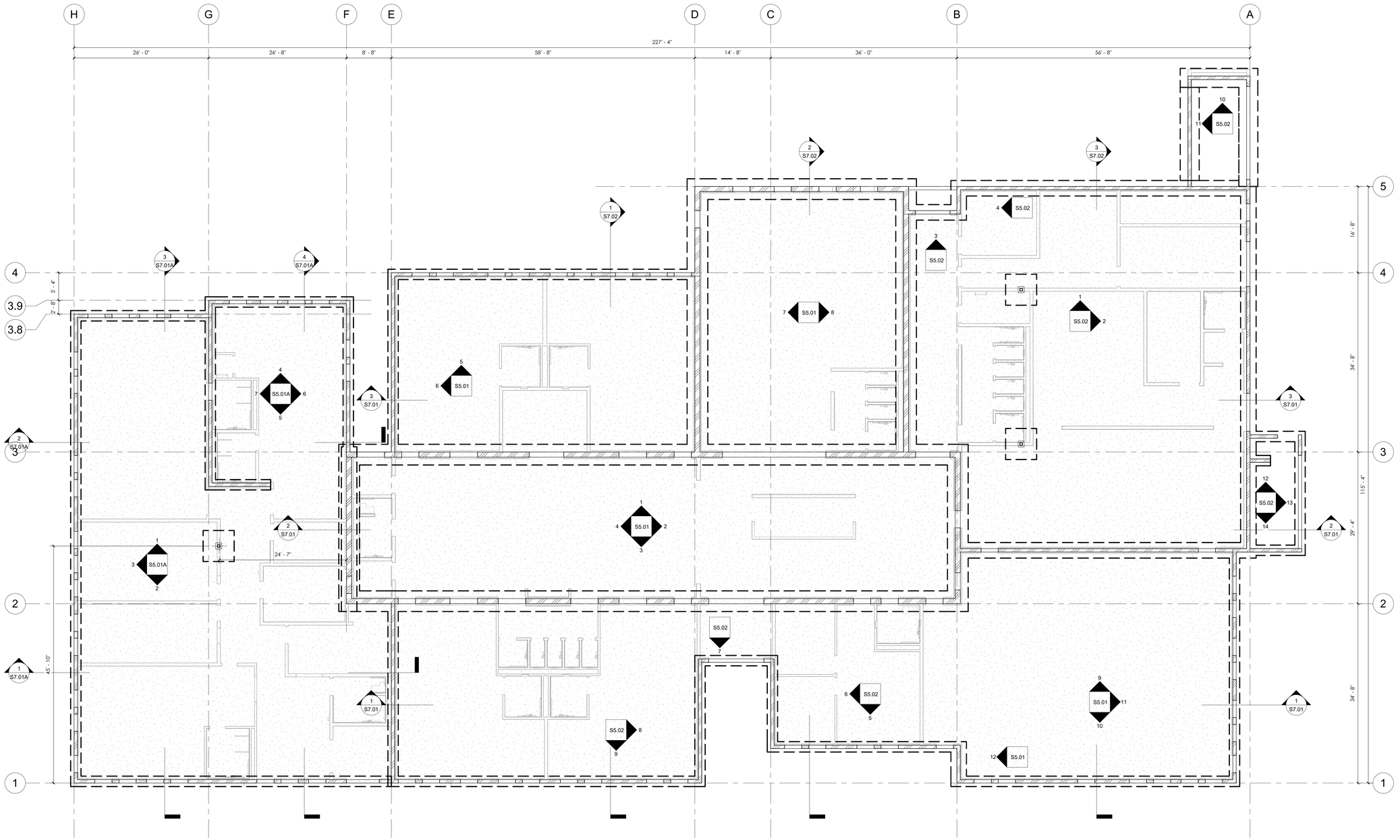

1 OVERALL FOUNDATION PLAN - EARLY LEARNING

1/8" = 1'-0"

tsk
225 South Arlington Avenue
Reno NV, 89501
phone: 775.857.2949
fax: 775.857.2403
www.tska.com

NOT FOR CONSTRUCTION

THESE DRAWINGS AND SPECIFICATIONS ARE THE PROPERTY OF TATE SNYDER KIMSEY ARCHITECTS AND MAY NOT BE REPRODUCED OR USED FOR ANY PURPOSE WITHOUT THE ARCHITECTS WRITTEN CONSENT.
AS INSTRUMENTS OF SERVICE, THESE DOCUMENTS ARE NOT FINAL AND READY FOR USE, AND THEREFORE NOT VALID, UNLESS THEY ARE SEALED, SIGNED AND DATED.

Copyright, Ltd 2022

Consultant

NELSON WILCOX
STRUCTURAL ENGINEERS
225 S Arlington Ave, Ste B, Reno, NV 89501
www.nelson-wilcox.com

PLEASE RECYCLE

Project
CITY OF FERNLEY CRRC

Job No: 21-058.00

Owner
CITY OF FERNLEY

Job No: 20-22

50% CONSTRUCTION DOCUMENTS

REVISIONS		
REV	DATE	DESCRIPTION

Sheet Title
OVERALL FOUNDATION PLAN - ALT. A

Date: JANUARY 19, 2023

Sheet No:
S1.01A

EARLY LEARNING FOUNDATION PLAN NOTES:

1. T.O. EXTERIOR FOOTINGS = 98' - 8" TYP., U.N.O.
2. T.O. INTERIOR FOOTINGS = 98' - 8" TYP., U.N.O.
3. CENTER ALL COLUMN SPOT FOOTINGS BELOW COLUMNS TYP.
4. NO CONDUIT SHALL BE PLACED IN THE SLAB ON GRADE.
5. SEE 15 / S0.2 WHERE UTILITIES ENTER BUILDING OR ARE ADJACENT TO COLUMN FOOTINGS.
6. SEE 16 / S0.2 & GENERAL NOTES FOR ENGINEERING FILL REQUIREMENTS AND SUBGRADE PREPARATION REQUIREMENTS.
7. SEE ARCHITECTURAL AND/OR MECHANICAL/PLUMBING DRAWINGS FOR ANY FLOOR DRAINS OR SINKS. CONTRACTOR TO COORDINATE.
8. SEE 7 / S0.2 FOR TYPICAL SLAB ON GRADE JOINTS. JOINTS TO BE PLACED AT 10'-0" MAX. O.C. AND LOCATED AT ALL RE-ENTRANT SLAB CORNERS, INTERIOR COLUMN LOCATIONS, OR ANY OTHER SLAB ON GRADE DISCONTINUITIES. SEE 12 / S0.2 FOR SLAB ON GRADE DOWELED JOINT INTERSECTIONS.
9. SEE 6 / S0.2 FOR TYPICAL FOUNDATION REINFORCING LAPS AT CORNERS, ENDS, AND INTERSECTIONS.
10. SEE 10 / S0.2 & 11 / S0.2 FOR TYPICAL REINFORCING HOOKS, BENDS AND HOOKS & BENDS FOR TIES.
11. PLACE 15 MIL VAPOR BARRIER BENEATH CONCRETE SLAB (OVER AGGREGATE BASE) AT LOCATIONS WITH TILE FLOORING (OR OTHER FLOORING SENSITIVE TO MOISTURE). SEAL ALL SEAMS AND SEAL AROUND ALL PENETRATIONS PER VAPOR BARRIER MANUFACTURER RECOMMENDATIONS.
12. SEE 5 / S0.3 FOR TYPICAL CMU CONTROL JOINT. SEE / — FOR TYPICAL CLAY BRICK EXPANSION JOINTS.
13. CONTRACTOR TO VERIFY AND COORDINATE ALL DIMENSIONS AND CONDITIONS WITH ARCH. PRIOR TO FABRICATION OR ERECTION.
14. SEE SHEETS S0.9 & S0.10 FOR TYPICAL INTERIOR WALL DETAILS.

EARLY LEARNING CONTINUOUS FOOTINGS SCHEDULE

MARK	WIDTH	THICK.	REINFORCING CROSSWISE			REINFORCING LENGTHWISE				REMARKS
			SIZE	LENGTH	SPACING (O.C.)	NO.	SIZE	LENGTH	SPACING (O.C.)	
CF2.0	2' - 0"	14"	#4	1' - 6"	24"	3	#5	CONT.	8 11/16"	CROSSWISE REINF. TO BE CENTERED BETWEEN VERT. WALL REINF.
CF3.0	3' - 0"	14"	#5	2' - 6"	12"	4	#5	CONT.	9 13/16"	
CF4.0	4' - 0"	14"	#5	3' - 6"	12"	5	#4	CONT.	10 3/8"	

EARLY LEARNING FOOTING SCHEDULE

MARK	WIDTH	LENGTH	THICK.	REINFORCING CROSSWISE				REINFORCING LENGTHWISE				QUANTITY	REMARKS
				NO.	SIZE	LENGTH	SPACING (O.C.)	NO.	SIZE	LENGTH	SPACING (O.C.)		
F6.0	6' - 0"	6' - 0"	16"	7	#5	5' - 6"	10 7/8"	7	#5	5' - 6"	10 7/8"	3	

EARLY LEARNING BASE PLATE / ANCHOR BOLT SCHEDULE

TYPE	QUANTITY	PLATE THICKNESS "T"	GROUT THICKNESS "G"	NUMBER OF ANCHORS	ANCHOR DIAMETER	ANCHOR EMBEDMENT "E"	ANCHOR PROJECTION "P"	CAST-IN OR EPOXY
BP-1	3	3/4"	1 1/2"	4	3/4"	13"	4 1/4"	CAST-IN

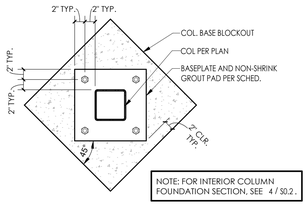

NOTE: FOR INTERIOR COLUMN FOUNDATION SECTION, SEE 4 / S0.2 .

EARLY LEARNING - BASEPLATES

EARLY LEARNING CMU WALL SCHEDULE

MARK	TYPE	WIDTH	REINFORCEMENT		FOOTING DOWELS	REMARKS
			VERT.	HORIZ.		
W1	CMU	8"	#5 AT 24" O.C., CENTERED	#4 AT 32" O.C.	TO MATCH VERTS.	(2) #5 (HORIZ) CONT. BARS AT T.O. WALL AND/OR ROOF & FLOOR LINE. SEE DETAILS

NOTES:

1. **SEE WALL ELEVATIONS FOR ADDITIONAL REINFORCING WHERE REQUIRED.**
2. ALL CMU WALLS TO BE FULLY GROUTED.
3. MASONRY SHALL BE CONSTRUCTED OF HOLLOW OPEN END UNITS WHEREVER POSSIBLE AND SHALL BE LAID IN A RUNNING BOND PATTERN.
4. FOLLOW DETAIL 9 / S0.3 FOR MIN. CMU CORNER AND 12B / S0.3 FOR JAMB REINFORCEMENT.
5. JAMB STEEL BARS IN SHORT SHEAR PIERS ARE NOT ADDITIVE TO WALL SCHEDULE STEEL. PLACE THE MORE RESTRICTIVE REINFORCING.
6. PROVIDE HORIZONTAL CORNER BARS AT ALL CORNERS AND INTERSECTING WALLS PER 9 / S0.3 .
7. PROVIDE (2) #5 CONT. HORIZONTAL CHORD STEEL AT ALL ROOF AND FLOOR LINE LEVELS PER DETAILS, U.N.O.
8. PROVIDE CONT. HORIZ. #5 BAR OR BARS AT JOIST WALL ANCHORS PER DETAILS (WHERE OCCURS).
9. ALL HORIZONTAL BARS SHALL BE ANCHORED AROUND END VERTICAL REINFORCING BARS AT JAMBS WITH A STANDARD HOOK.
10. PROVIDE CMU REINFORCEMENT LAP SPLICES PER GENERAL NOTES.
11. BARS E.F. SHALL BE PLACED 1/2" CLEAR OF THE INSIDE FACE OF THE CMU SHELL. INCLUDING AT JAMBS.
12. BARS CENTERED SHALL BE CENTERED IN THE CMU WALL, HORIZ. STEEL TO BE PLACED ALONG SIDE.

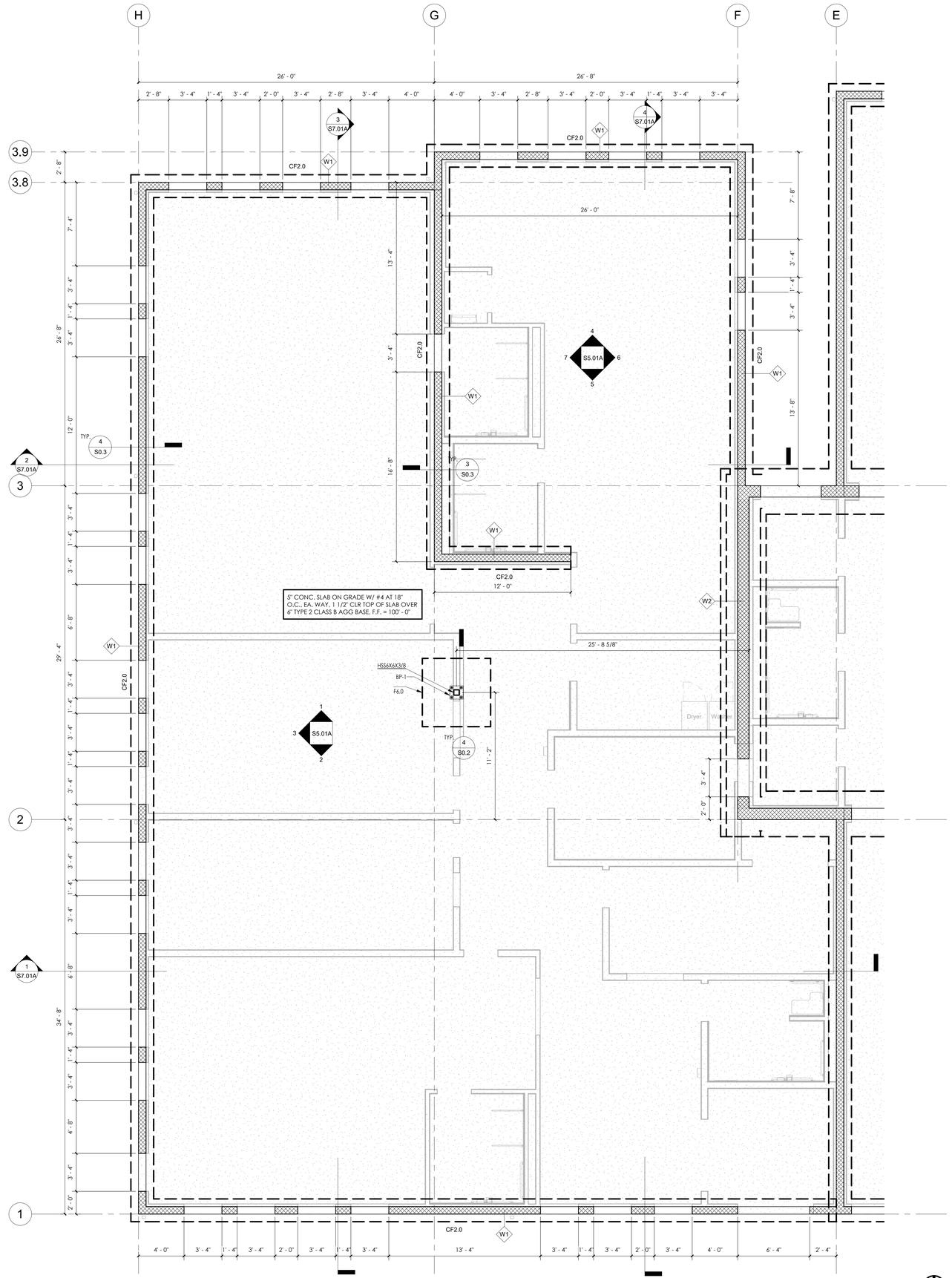

1 **FOUNDATION PLAN - EARLY LEARNING**
1/4" = 1'-0"

GENERAL NOTES

1. SEE WALL ELEVATIONS FOR MORE RESTRICTIVE WALL REINFORCEMENT. VERTICAL WALL REINFORCING SHALL BE EMBEDDED IN FOUNDATIONS TO MATCH VERTICAL AND TYPICAL REINFORCING IN ELEVATIONS.
2. CONTRACTOR SHALL PROVIDE CONSTRUCTION JOINTS (C.J.) AND CONTROL JOINTS (ALTERNATE S.J. AND D.J.) FOR ALL SLABS ON GRADE IN ACCORDANCE WITH DETAILS 1 / S0.3 & 7 / S0.2, RESPECTIVELY. A DRAWING SHOWING THE PROPOSED LAYOUT OF ALL SLAB JOINTS SHALL BE SUBMITTED TO THE ARCHITECT FOR REVIEW AND APPROVAL.

KEYNOTES

LEGEND

KEYPLAN

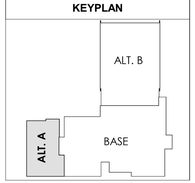

tsk
225 South Arlington Avenue
Reno NV, 89501
phone: 775.857.2949
fax: 775.857.2403
www.tska.com

NOT FOR CONSTRUCTION

THESE DRAWINGS AND SPECIFICATIONS ARE THE PROPERTY OF TATE SNYDER KIMSEY ARCHITECTS AND MAY NOT BE REPRODUCED OR USED FOR ANY PURPOSE WITHOUT THE ARCHITECTS WRITTEN CONSENT. AS INSTRUMENTS OF SERVICE, THESE DOCUMENTS ARE NOT FINAL AND READY FOR USE, AND THEREFORE NOT VALID, UNLESS THEY ARE SEALED, SIGNED AND DATED.

Copyright, Ltd 2022

Consultant

NELSON WILCOX
STRUCTURAL ENGINEERS
225 S Arlington Ave, Ste B, Reno, NV 89501
www.nelson-wilcox.com

PLEASE RECYCLE

Project
CITY OF FERNLEY CRRC

Job No: 21-058.00

Owner
CITY OF FERNLEY

Job No: 20-22

50% CONSTRUCTION DOCUMENTS

REVISIONS		
REV	DATE	DESCRIPTION

Sheet Title
ENLARGED FOUNDATION PLAN - ALT. A

Date: JANUARY 19, 2023
Sheet No:
S1.11A

ROOF FRAMING PLAN NOTES:

1. B.O. DECK= TOP OF FRAMING (BOTTOM OF DECK) ELEVATION ABOVE THE FINISHED FIRST FLOOR.
2. SEE FOR STEEL JOIST AND JOIST GIRDER DESIGN CRITERIA.
3. SEE 3 / S0.6 & 4 / S0.6 FOR ROOF HUNG PIPING SUPPORTS.
4. FIRE SPRINKLER CONTRACTOR SHALL LAY OUT FIRE SPRINKLER LINES SO THAT NO LINE PASSES UNDER SKYLIGHT/SMOKEVENTS OR FUTURE MECHANICAL UNITS (WHERE THESE ITEMS OCCUR).
5. FOR ROOF HATCH WITH LADDER ACCESS, SEE ARCHITECTURAL.
6. STEEL JOIST AND JOIST GIRDER SUPPLIER SHALL SUBMIT STRUCTURAL CALCULATIONS, SHOP, AND ERECTION DRAWINGS SEALED AND SIGNED BY A NEVADA REGISTERED CIVIL OR STRUCTURAL ENGINEER TO THE ENGINEER OF RECORD WHO AGREES TO REVIEW THESE DOCUMENTS FOR ACCEPTANCE PRIOR TO FABRICATION. STRUCTURAL CALCULATIONS, SHOP AND ERECTION DRAWINGS SHALL BE SUBMITTED TO THE BUILDING DEPARTMENT FOR ACCEPTANCE AFTER THE ENGINEER OF RECORD HAS NOTED HIS/HER ACCEPTANCE.
7. JOIST AND JOIST GIRDER DRAWINGS SHALL SHOW COMPLIANCE WITH THE STANDARD SPECIFICATIONS FOR STEEL JOISTS, K-SERIES, LH-SERIES, DLH-SERIES AND JOIST GIRDERS, 44TH EDITION, PUBLISHED BY THE STEEL JOIST INSTITUTE.
8. JOIST AND JOIST GIRDERS SHALL BE IDENTIFIED AS TO TYPE, SIZE, AND MANUFACTURER BY TAGGING OR OTHER SUITABLE MEANS AT THE TIME OF MANUFACTURE OR FABRICATION. SUCH IDENTIFICATION SHALL BE MAINTAINED CONTINUOUSLY TO THE POINT OF THEIR INSTALLATION IN A STRUCTURE.

EARLY LEARNING METAL DECK SCHEDULE

MARK	DECK TYPE (SEE NOTE 1)	DECK SIZE	DECK ATTACHMENT ZONE	DIAPHRAGM CONNECTIONS (SEE NOTES 2, 3 AND 6)		
				LOW FLUTES		SIDE SEAMS
				PERPENDICULAR TO SUPPORT	PARALLEL TO SUPPORT	
PLB-I	PLB-36	1 1/2" x 18 GA	1	FASTENERS AT 36/4 PATTERN	FASTENERS AT 12" O.C. MAX	VSC2 AT 24" O.C. MAX

NOTES:

1. METAL DECK SHALL BE AS SPECIFIED BY ASC, VERCO, VULCRAFT, EPIC OR APPROVED EQUAL.
2. CONNECTIONS SHALL BE PLACED IN ACCORDANCE WITH THE DECK MANUFACTURERS STANDARD PATTERN AND REQUIREMENTS.
3. PW = 3/4" PUDDLE WELD, VSC2 = VERCO PUNCHLOK II SIDELAP CONNECTION.
4. DECK SHALL BE PLACED IN EITHER A 2-SPAN OR 3-SPAN CONDITION. SINGLE DECK SPANS WILL NOT BE ALLOWED UNLESS SPECIFICALLY NOTED.
5. REFER TO DECK ATTACHMENT DIAGRAM FOR DECK ATTACHMENT ZONE.
6. FASTENERS SHALL BE #12 SCREWS FOR SUPPORT STEEL THICKNESS LESS THAN 1/8". FASTENERS SHALL BE HILTI HSN-24 FOR SUPPORT STEEL THICKNESS 1/8" TO 3/8". FASTENERS SHALL BE HILTI X-ENP-19 FOR SUPPORT STEEL THICKNESS GREATER THAN 1/4", FOR SUPPORT STEEL THICKNESS BETWEEN 1/4" AND 3/8" (INCLUSIVE), HILTI HSN-24 OR X-ENP-19 FASTENERS MAY BE USED AT CONTRACTOR'S OPTION.

EARLY LEARNING JOIST BEARING PLATE SCHEDULE

MARK	PLATE	ANCHOR	WALL ANCHORAGE LOAD (0.6W OR 0.7E)
P4	8" CMU: 3/4" x 5 1/2" x 1' - 3" 12" CMU: 3/4" x 9" x 1' - 3"	(4) 3/4" x 6" NSA AT 4" O.C.	8" CMU: 4.8 KIPS 12" CMU: 8.0 KIPS

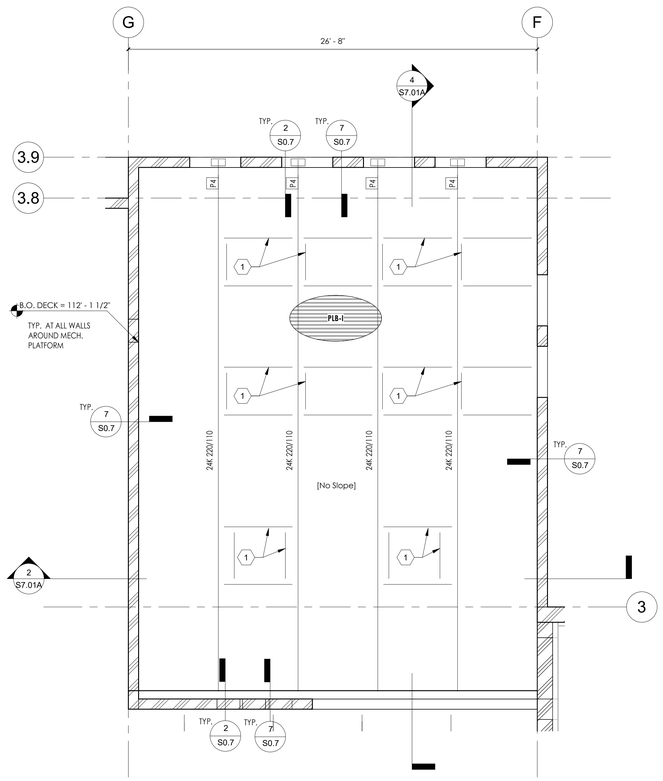

3 EARLY LEARNING -MECHANICAL ROOF FRAMING PLAN
1/4" = 1'-0"

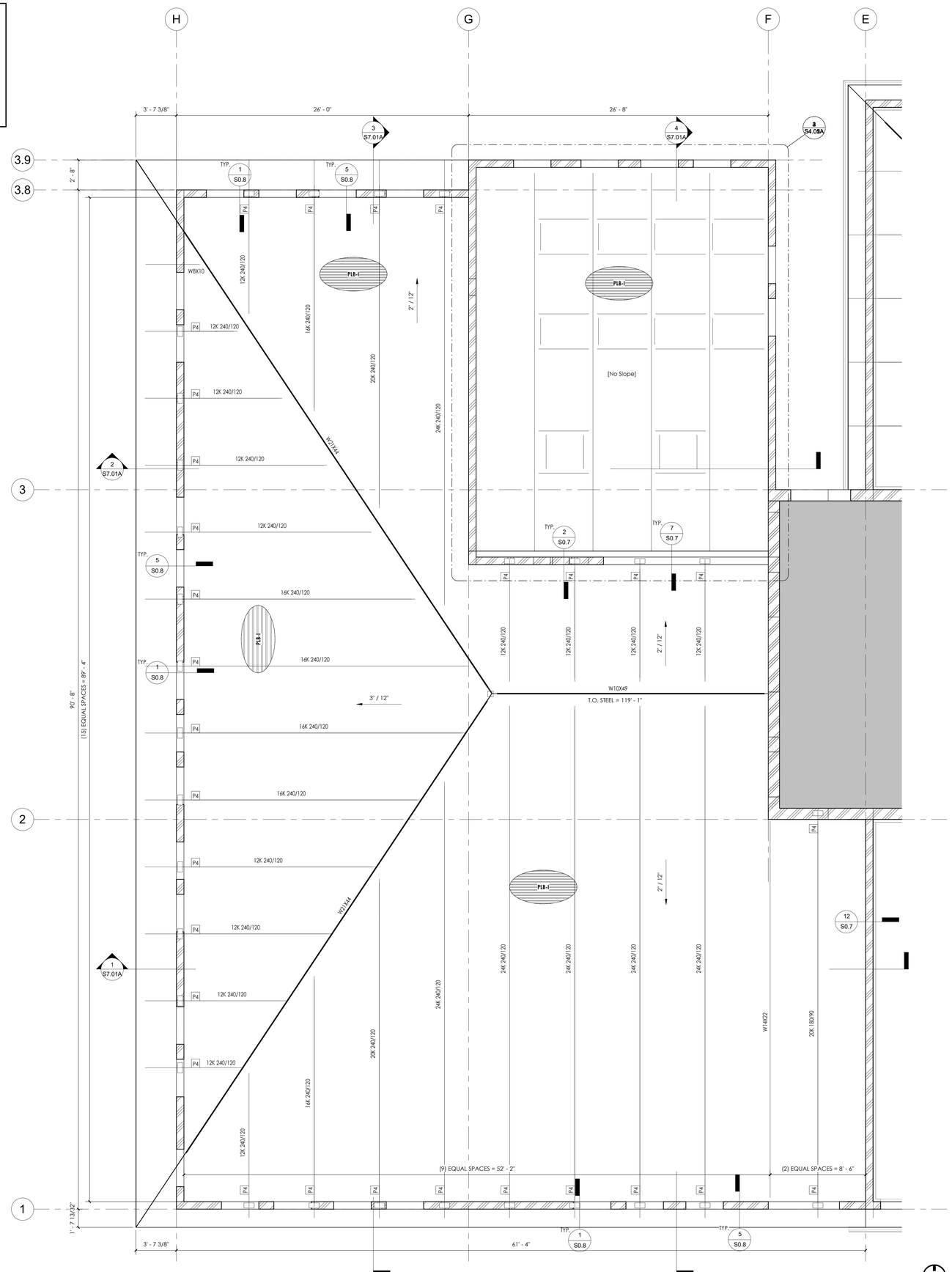

1 EARLY LEARNING - ROOF FRAMING PLAN
1/4" = 1'-0"

GENERAL NOTES

KEYNOTES

1. W8x10 FRAMING UNDER RTU. COORDINATE LOCATIONS WITH MECH. AND APPROVED CURB SUBMITTAL. REFER TO DETAILS 7/S0.6. 12/S0.6. AND 1/S0.5.
2. FAN MOUNT LOCATION REFER TO DETAIL 10/S0.6.
3. 30" DIA. DUCT THRU JOIT. VERIFY SIZE ADN LOCATION WITH MECH. DRAWINGS.
4. 2" SEISMIC JOINT

LEGEND

P# JOIST BEARING PLATE PER SCHED.

KEYPLAN

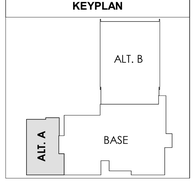

tsk
225 South Arlington Avenue
Reno NV, 89501
phone: 775.857.2949
fax: 775.857.2403
www.tska.com

NOT FOR CONSTRUCTION

THESE DRAWINGS AND SPECIFICATIONS ARE THE PROPERTY OF TATE SNYDER KIMSEY ARCHITECTS AND MAY NOT BE REPRODUCED OR USED FOR ANY PURPOSE WITHOUT THE ARCHITECTS WRITTEN CONSENT. AS INSTRUMENTS OF SERVICE, THESE DOCUMENTS ARE NOT FINAL AND READY FOR USE, AND THEREFORE NOT VALID, UNLESS THEY ARE SEALED, SIGNED AND DATED.
Copyright, Ltd 2022

Consultant

NELSON WILCOX
STRUCTURAL ENGINEERS
225 S Arlington Ave, Ste B, Reno, NV 89501
www.nelson-wilcox.com

PLEASE RECYCLE

Project
CITY OF FERNLEY CRRC

Job No: 21-058.00

Owner
CITY OF FERNLEY

Job No: 20-22

50% CONSTRUCTION DOCUMENTS

REVISIONS		
REV	DATE	DESCRIPTION

Sheet Title
ROOF FRAMING PLAN - ALT. A

Date: JANUARY 19, 2023
Sheet No:
S4.01A

ALT. A TYP. JOIST DESIGN CRITERIA

1. JOISTS AND JOIST GIRDERS SHALL BE DESIGNED BY THE JOIST MANUFACTURER IN ACCORDANCE WITH THE STEEL JOIST INSTITUTE (SJI) AND THE 2018 IBC. THE JOIST DESIGNATIONS INDICATED IN THE CONSTRUCTION DOCUMENTS SHALL BE CONSIDERED MINIMUMS. FINAL DESIGN AND DESIGNATION SHALL BE BY THE JOIST MANUFACTURER, BASED ON THE LOADING CRITERIA PRESENTED IN THE CONSTRUCTION DOCUMENTS, AND BE OF THE DEPTHS SHOWN ON THE DRAWINGS.
2. IN ADDITION TO THE LOADS INDICATED, JOISTS AND JOIST GIRDERS SHALL BE DESIGNED FOR ALL SPECIAL LOADS INDICATED ON THE PLANS AND DETAILS, INCLUDING THE MECHANICAL LOADS IDENTIFIED ON THE PLANS.
3. DEFLECTIONS OF ALL MEMBERS SHALL BE LIMITED TO L/360 FOR LIVE LOADS AND L/240 FOR TOTAL LOADS, U.N.O.
4. PROVIDE SJI STANDARD CAMBER U.N.O.
5. PROVIDE ALL REQUIRED BRIDGING FOR THE SPANS AND LOADING SHOWN WHETHER INDICATED ON PLANS OR NOT. WHERE INDICATED ON PLANS, LINES OF BRIDGING ARE APPROXIMATE AND SHALL BE ADJUSTED AS NECESSARY BY THE JOIST MANUFACTURER FOR THEIR FINAL DESIGN. THE CONTRACTOR AND JOIST MANUFACTURER SHALL COORDINATE THE LOCATIONS OF BRIDGING WITH MECHANICAL DUCTS, PIPING, OR OTHER ITEMS TO AVOID CONFLICTS. USE X-BRIDGING OR DIAGONAL BRACING AS REQUIRED AT LOCATIONS WHERE LINES OF BRIDGING MUST BE INTERRUPTED BECAUSE OF MECHANICAL DUCTWORK OR OTHER OBSTRUCTIONS. SEE TYPICAL BRIDGING DETAILS.
6. ALL JOISTS SHALL HAVE SEAT DEPTHS (SLOPING WHERE REQUIRED) AND TOP CHORD EXTENSIONS AS INDICATED IN PLANS AND DETAILS.
7. REINFORCE JOISTS PER TYPICAL DETAILS WHERE CONCENTRATED LOADS ARE APPLIED TO JOIST CHORDS FURTHER THAN 6" AWAY FROM PANEL POINTS.
8. JOISTS SHALL BE DESIGNED WITH CLEARANCES AS REQUIRED WHERE DUCTWORK PASSES THROUGH WEB SPACE. THE CONTRACTOR SHALL BE RESPONSIBLE FOR THE FINAL LAYOUT OF THESE DUCTS AND FOR COMMUNICATING THESE REQUIREMENTS TO THE JOIST MANUFACTURER.
9. ALL "LH" AND "K" SERIES JOISTS SHALL BE PROVIDED WITH EITHER 6" OR 3 1/2" HIGH BEARING SEAT AS SHOWN ON THE STRUCTURAL DETAILS.
10. JOISTS SHALL BE DESIGNED FOR THE FOLLOWING LOADS:

LOAD CASE	LOAD
DEAD LOAD	20 PSF AT 1 1/2" DECK
ROOF LIVE LOAD	20 PSF
ROOF SNOW LOAD	9 PSF
WIND UPLIFT (ALLOWABLE)	SEE UPLIFT DIAGRAM
TOP CHORD AND JOIST SEAT AXIAL LOAD (0.6W OR 0.7E WALL ANCHORAGE)	SEE JOIST BEARING SEAT SCHEDULE
JOIST ADD LIVE LOAD ANYWHERE ALONG TOP OR BOTTOM CHORDS (ALL JOISTS AT OR BETWEEN PANEL POINTS)	500 LBS, U.N.O.

ADD LOADS

LOAD CASE	D (DOWN)	0.6W (UP)	0.6W (DOWN)	0.7E (UP OR DOWN)
LC1				
LC2				
LC3				
LC4				
LC5				
LC6				
LC7				
LC8				
LC9				
LC10				
LC11				
LC12				
LC13				
LC14				
LC15				
LC16				

NOTE:
1. SEE DETAILS 14 / S0.6 & 16 / S0.6 FOR MOMENT FRAME BEAM BRACING TO JOISTS AND ROOF FRAMING PLAN FOR BRACE LOCATIONS.

2 EARLY LEARNING -MECHANICAL ROOF JOIST LOADING PLAN

1/4" = 1'-0"

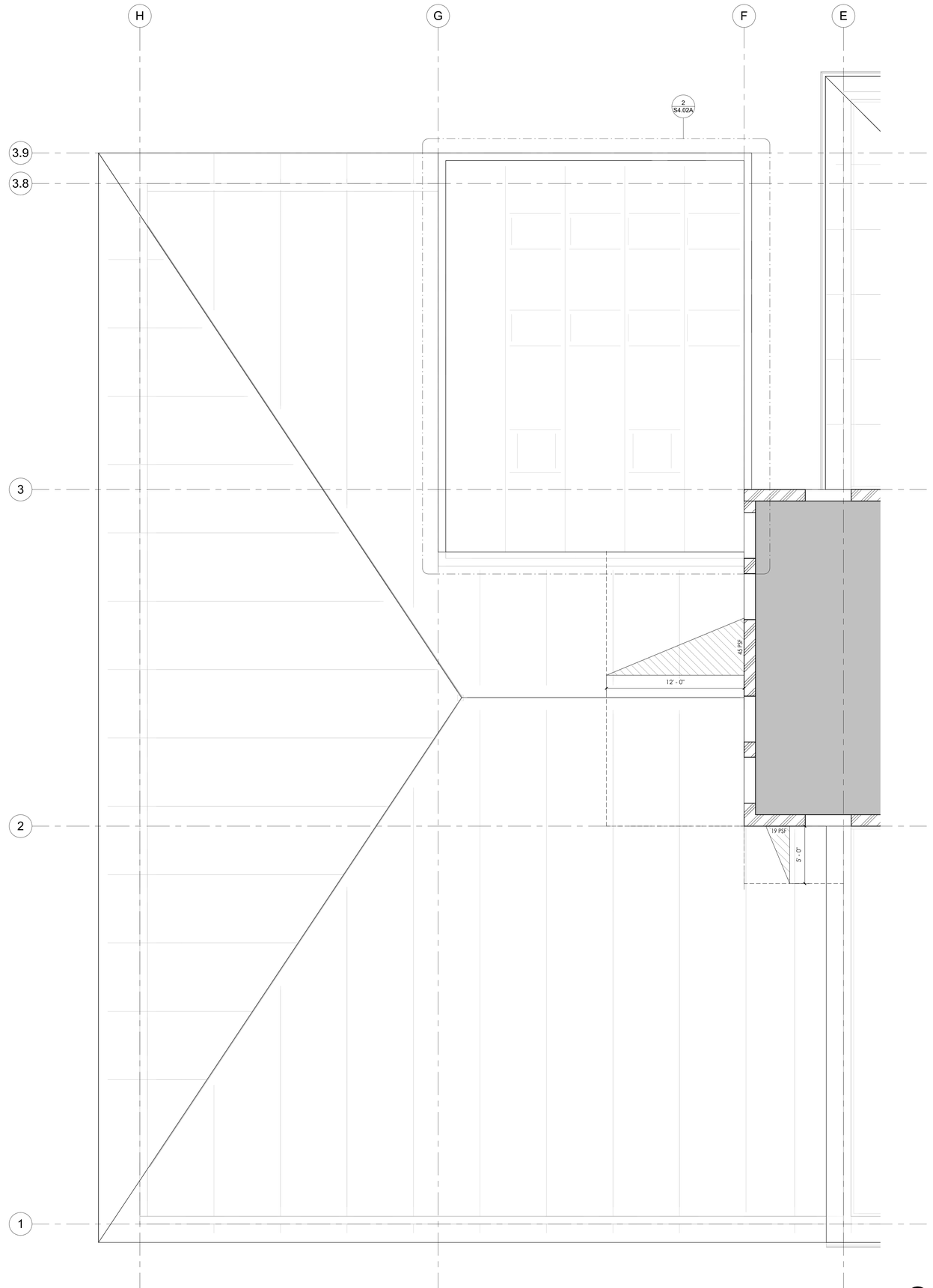

1 EARLY LEARNING - JOIST LOADING PLAN

1/4" = 1'-0"

GENERAL NOTES

KEYNOTES

LEGEND

MECHANICAL EQUIPMENT, SEE MECH.

ROOF DECK OPENING, REINFORCE PER DETAIL 9 / S0.6 .COORDINATE WITH MECHANICAL

LC# JOIST POINT ADD LOADS PER ADD LOADS SCHEDULE

LC# JOIST DISTRIBUTED ADD LOADS PER ADD LOADS SCHED.

SNOW LOADING LEGEND

UNIFORM SNOW LOAD = 23 PSF

TAPERED SNOW DRIFT LOADS PER PLAN

DRIFT LOAD

UNIFORM SNOW LOAD = 9 PSF

DRIFT LENGTH

KEYPLAN

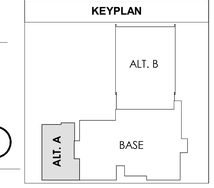

tsk
225 South Arlington Avenue
Reno NV, 89501
phone: 775.857.2949
fax: 775.857.2403
www.tska.com

NOT FOR CONSTRUCTION

THESE DRAWINGS AND SPECIFICATIONS ARE THE PROPERTY OF TATE SNYDER KIMSEY ARCHITECTS AND MAY NOT BE REPRODUCED OR USED FOR ANY PURPOSE WITHOUT THE ARCHITECTS WRITTEN CONSENT. AS INSTRUMENTS OF SERVICE, THESE DOCUMENTS ARE NOT FINAL AND READY FOR USE, AND THEREFORE NOT VALID, UNLESS THEY ARE SEALED, SIGNED AND DATED.

Copyright, Ltd 2022

Consultant

NELSON WILCOX
STRUCTURAL ENGINEERS
225 S Arlington Ave, Ste B, Reno, NV 89501
www.nelson-wilcox.com

PLEASE RECYCLE

Project
CITY OF FERNLEY CRRC

Job No: 21-058.00

Owner
CITY OF FERNLEY

Job No: 20-22

50% CONSTRUCTION DOCUMENTS

REVISIONS		
REV	DATE	DESCRIPTION

Sheet Title
JOIST LOADING PLANS - ALT. A

Date: JANUARY 19, 2023
Sheet No:
S4.02A

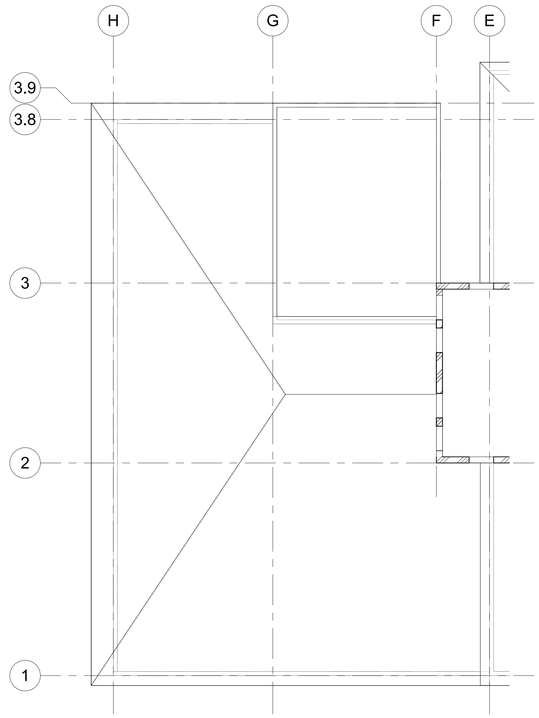

2 EARLY LEARNING - ATTACHMENT ZONE DIAGRAM

1" = 10'-0"

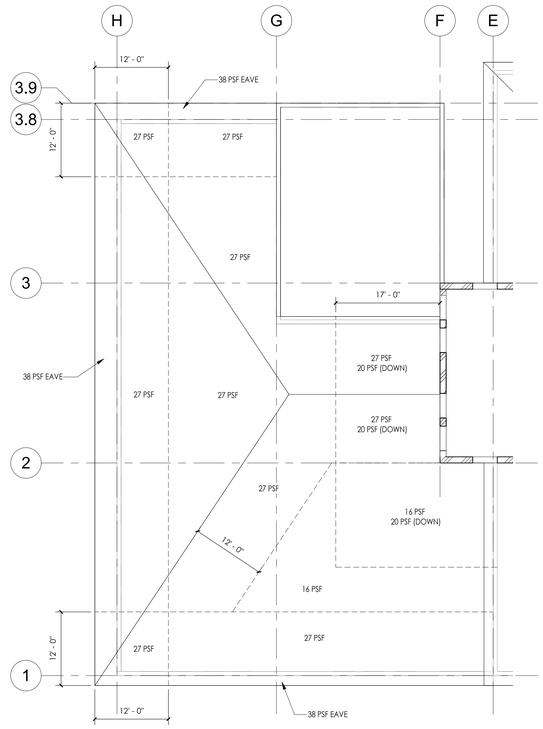

1 EARLY LEARNING - WIND UPLIFT DIAGRAM (0.6W)

1" = 10'-0"

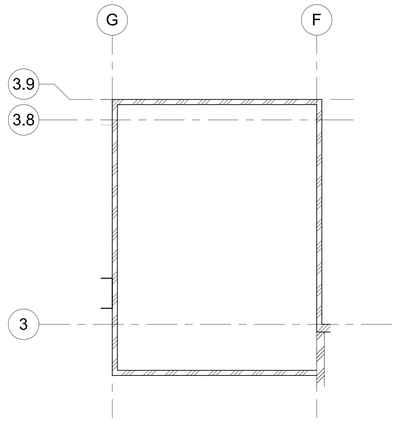

4 EARLY LEARNING -MECH. ROOF ATTACHMENT ZONE DIAGRAM

1/8" = 1'-0"

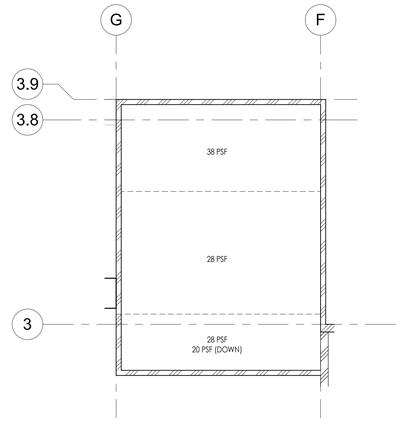

3 EARLY LEARNING -MECH. ROOF WIND UPLIFT DIAGRAM (0.6W)

1/8" = 1'-0"

tsk
225 South Arlington Avenue
Reno NV, 89501
phone: 775.857.2949
fax: 775.857.2403
www.tska.com

NOT FOR CONSTRUCTION

THESE DRAWINGS AND SPECIFICATIONS ARE THE PROPERTY OF TATE SNYDER KIMSEY ARCHITECTS AND MAY NOT BE REPRODUCED OR USED FOR ANY PURPOSE WITHOUT THE ARCHITECTS WRITTEN CONSENT. AS INSTRUMENTS OF SERVICE, THESE DOCUMENTS ARE NOT FINAL AND READY FOR USE, AND THEREFORE NOT VALID, UNLESS THEY ARE SEALED, SIGNED AND DATED.

Copyright, Ltd 2022

Consultant

NELSON WILCOX
STRUCTURAL ENGINEERS
225 S Arlington Ave, Ste B, Reno, NV 89501
www.nelson-wilcox.com

PLEASE RECYCLE

Project
CITY OF FERNLEY CRRC

Job No: 21-058.00

Owner
CITY OF FERNLEY

Job No: 20-22

50% CONSTRUCTION DOCUMENTS

REVISIONS		
REV	DATE	DESCRIPTION

Sheet Title
JOIST LOADING PLANS - ALT. A

Date: JANUARY 19, 2023

Sheet No:
S4.05A

NOTE:

1. WALL OPENINGS LESS THAN 12" IN WIDTH AND/OR HEIGHT NEED NO SPECIAL REINFORCING AND THEREFORE ARE NOT SHOWN FOR CLARITY.
2. COORDINATE ALL MECH./PLUMBING OPENINGS WITH MECH.
3. CONTRACTOR SHALL PROVIDE VERTICAL CONTROL JOINTS (C.J.) IN MASONRY WALLS IN ACCORDANCE WITH DETAIL 5 / S0.3 AT LOCATIONS SHOWN ON ELEVATIONS.
4. ADDITIONAL HORIZONTAL REINFORCEMENT AT CMU PIERS TO EXTEND 32" ABOVE AND BELOW THE ADJACENT WINDOW OPENING(S) AND 32" ABOVE THE ADJACENT DOOR OPENINGS.
5. WHERE THE LENGTH OF A WALL PIER BETWEEN OPENINGS IS LESS THAN 3X THE NOMINAL THICKNESS, THE LINTEL REINFORCING SHALL BE CONTINUOUS OVER THE WALL PIER.

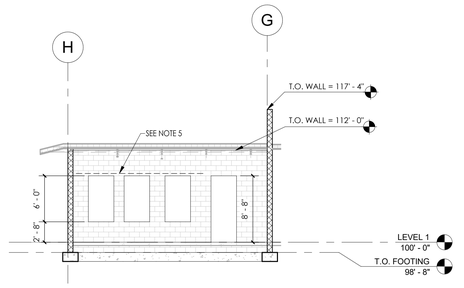

1 **WALL ELEVATION - GRID 3.8 (LOOKING NORTH)**
1/8" = 1'-0"

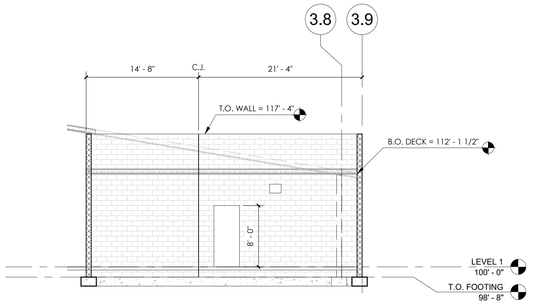

7 **WALL ELEV. - (LOOKING WEST)**
1/8" = 1'-0"

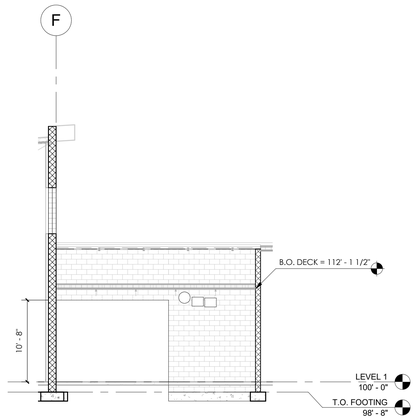

5 **WALL ELEV. (LOOKING SOUTH)**
1/8" = 1'-0"

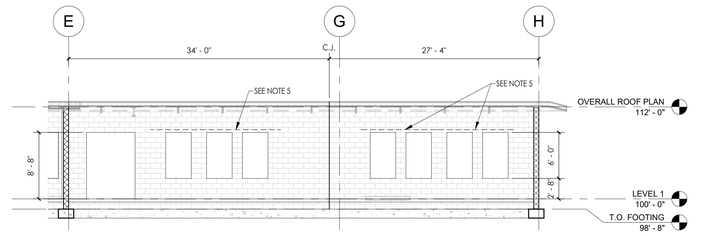

2 **WALL ELEVATION - GRID 1 (LOOKING SOUTH)**
1/8" = 1'-0"

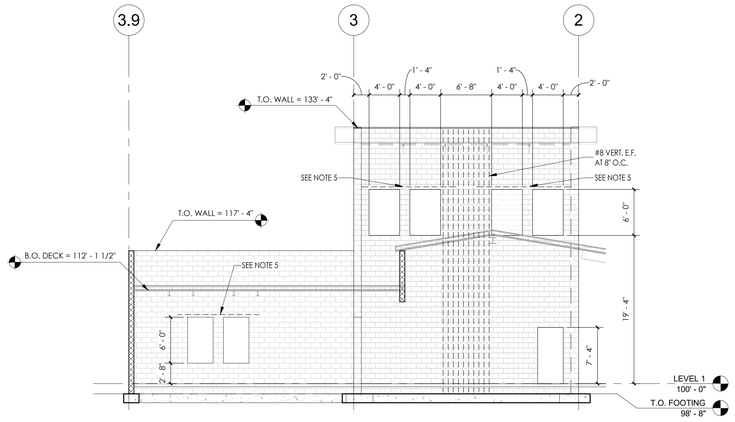

6 **WALL ELEV. - GRID F (LOOKING EAST)**
1/8" = 1'-0"

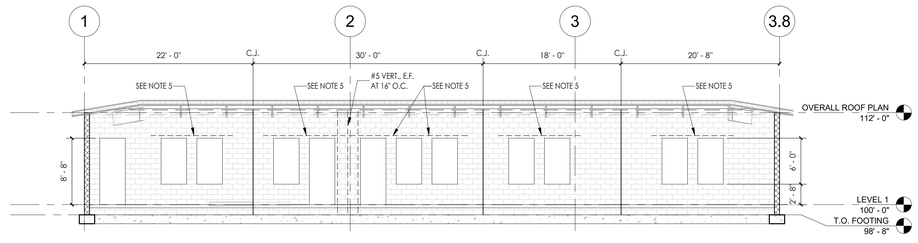

3 **WALL ELEVATION - GRID H (LOOKING**
1/8" = 1'-0"

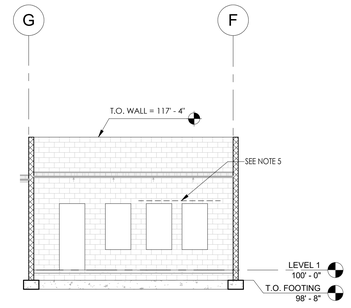

4 **WALL ELEV. - GRID 3.9 (LOOKING NORTH)**
1/8" = 1'-0"

tsk
225 South Arlington Avenue
Reno NV, 89501
phone: 775.857.2949
fax: 775.857.2403
www.tska.com

NOT FOR CONSTRUCTION

THESE DRAWINGS AND SPECIFICATIONS ARE THE PROPERTY OF TATE SNYDER KIMSEY ARCHITECTS AND MAY NOT BE REPRODUCED OR USED FOR ANY PURPOSE WITHOUT THE ARCHITECTS WRITTEN CONSENT. AS INSTRUMENTS OF SERVICE, THESE DOCUMENTS ARE NOT FINAL AND READY FOR USE, AND THEREFORE NOT VALID, UNLESS THEY ARE SEALED, SIGNED AND DATED.

Copyright, Ltd 2022

Consultant

NELSON WILCOX
STRUCTURAL ENGINEERS
225 S Arlington Ave, Ste B, Reno, NV 89501
www.nelson-wilcox.com

PLEASE RECYCLE

Project
CITY OF FERNLEY CRRC

Job No: 21-058.00

Owner
CITY OF FERNLEY

Job No: 20-22

50% CONSTRUCTION DOCUMENTS

REVISIONS		
REV	DATE	DESCRIPTION

Sheet Title
WALL ELEVATIONS - ALT. A

Date: JANUARY 19, 2023
Sheet No:
S5.01A

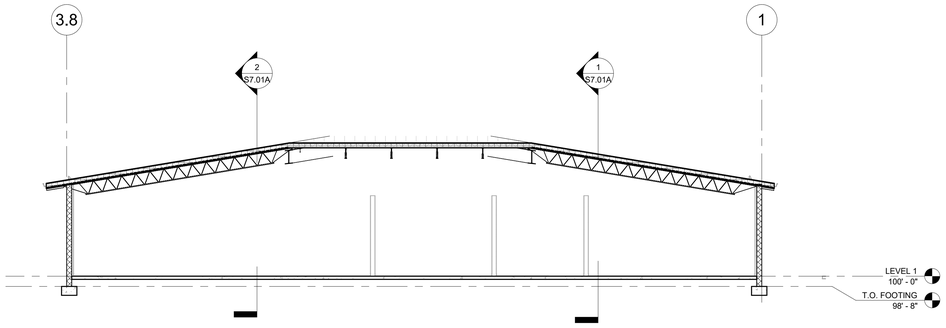

3 EARLY LEARNING - STRUCTURAL SECTION 3

1/8" = 1'-0"

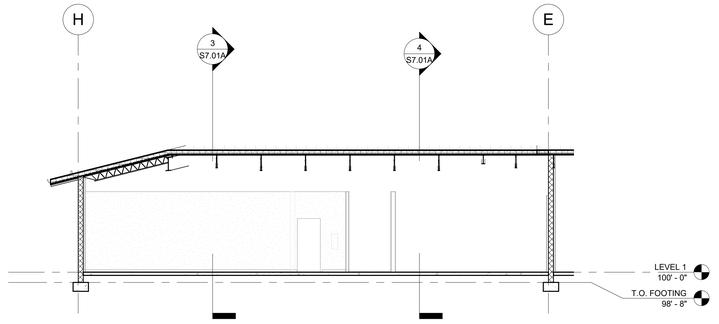

1 EARLY LEARNING - STRUCTURAL SECTION 1

1/8" = 1'-0"

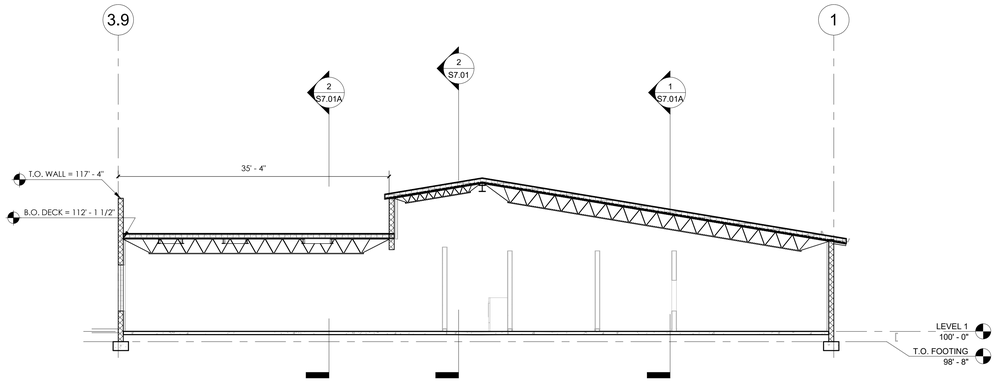

4 EARLY LEARNING - STRUCTURAL SECTION 4

1/8" = 1'-0"

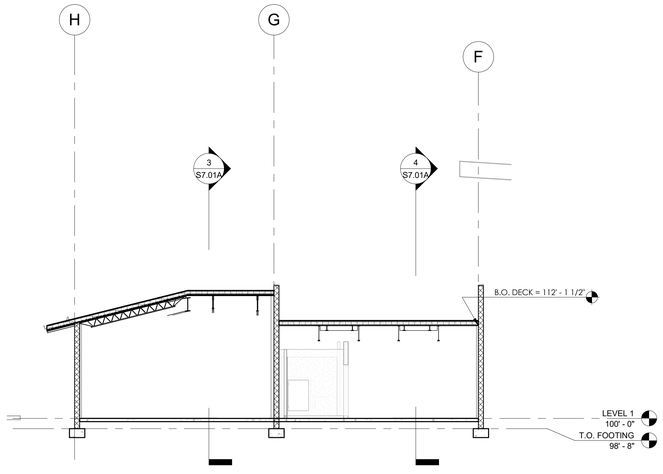

2 EARLY LEARNING - STRUCTURAL SECTION 2

1/8" = 1'-0"

GENERAL NOTES

KEYNOTES

LEGEND

KEYPLAN

tsk
225 South Arlington Avenue
Reno NV, 89501
phone: 775.857.2949
fax: 775.857.2403
www.tska.com

NOT FOR CONSTRUCTION

THESE DRAWINGS AND SPECIFICATIONS ARE THE PROPERTY OF TATE SNYDER KIMSEY ARCHITECTS AND MAY NOT BE REPRODUCED OR USED FOR ANY PURPOSE WITHOUT THE ARCHITECTS WRITTEN CONSENT. AS INSTRUMENTS OF SERVICE, THESE DOCUMENTS ARE NOT FINAL AND READY FOR USE, AND THEREFORE NOT VALID, UNLESS THEY ARE SEALED, SIGNED AND DATED.

Copyright, Ltd 2022

Consultant

NELSON WILCOX
STRUCTURAL ENGINEERS
225 S Arlington Ave, Ste B, Reno, NV 89501
www.nelson-wilcox.com

PLEASE RECYCLE

Project

CITY OF FERNLEY CRRC

Job No: 21-058.00

Owner

CITY OF FERNLEY

Job No: 20-22

50% CONSTRUCTION DOCUMENTS

REVISIONS		
REV	DATE	DESCRIPTION

Sheet Title

STRUCTURAL SECTIONS - ALT. A

Date: JANUARY 19, 2023

Sheet No:

S7.01A

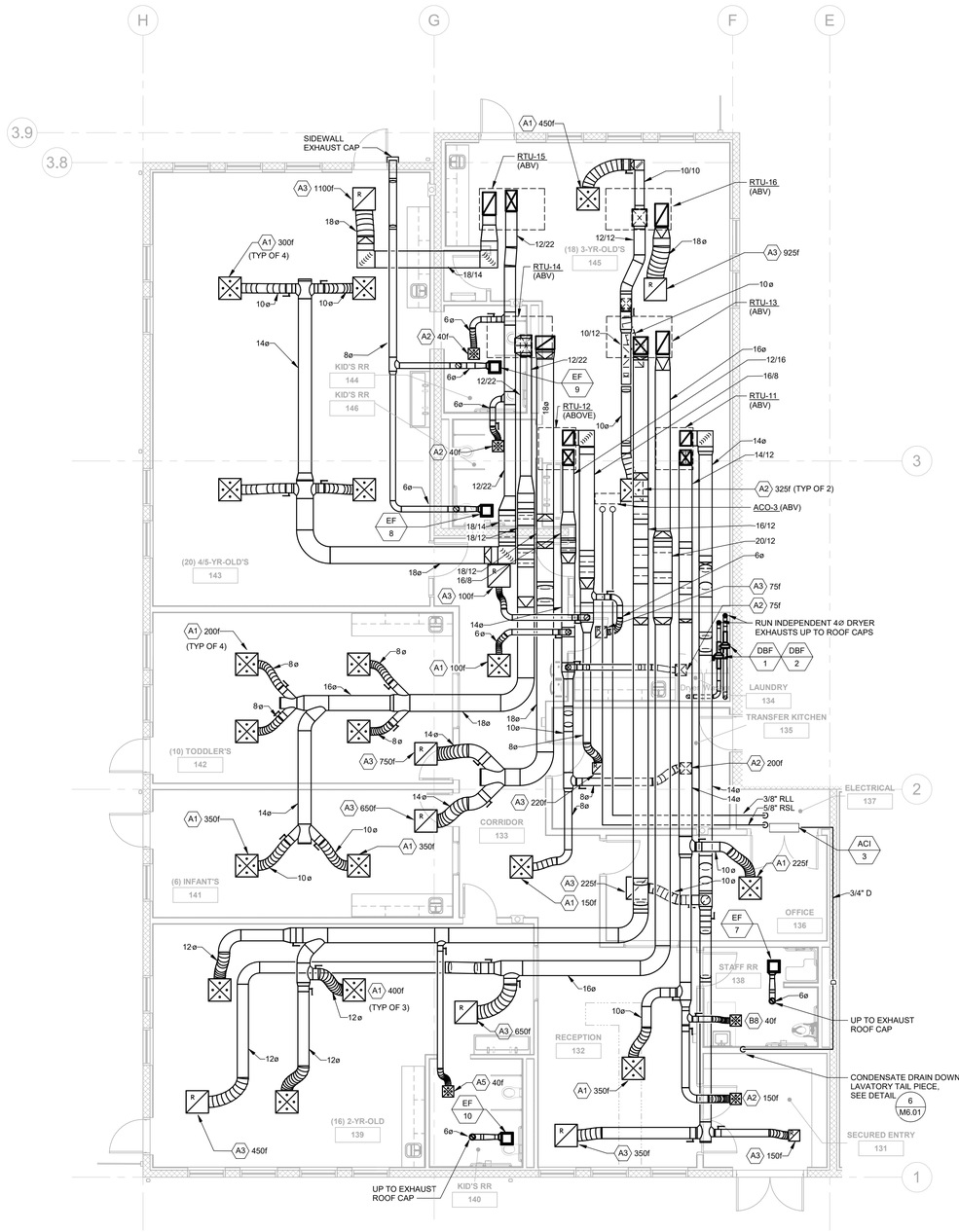

MECHANICAL PARTIAL FLOOR PLAN - ALT. A

1 / M1.11A

SCALE: 3/16" = 1'-0"

N

tsk

225 South Arlington Avenue
Reno NV, 89501
phone: 775.857.2949
fax: 775.857.2403
www.tska.com

THESE DRAWINGS AND SPECIFICATIONS ARE THE PROPERTY OF TATE SNYDER KIMSEY ARCHITECTS AND MAY NOT BE REPRODUCED OR USED FOR ANY PURPOSE WITHOUT THE ARCHITECTS WRITTEN CONSENT. AS INSTRUMENTS OF SERVICE, THESE DOCUMENTS ARE NOT FINAL AND READY FOR USE, AND THEREFORE NOT VALID, UNLESS THEY ARE SEALED, SIGNED AND DATED.

Copyright, Ltd 2023

Consultant

AINSWORTH ASSOCIATES
MECHANICAL ENGINEERS
1420 HOLCOMB AVE., SUITE 201
RENO, NV 89502
TEL: 775-329-9100
4557 GREENVIEW DR.
EL DORADO HILLS, CA 95762
TEL: 916-737-6014
www.aa-me.com

JOB 2021-065

PLEASE RECYCLE

Project

CITY OF FERNLEY CRRC

Job No: 21-058.00

Owner

CITY OF FERNLEY

PROGRESS
NOT FOR CONSTRUCTION

50% CONSTRUCTION DOCUMENTS

REVISIONS		
REV	DATE	DESCRIPTION

Sheet Title

MECHANICAL PARTIAL FLOOR PLAN - ALT. A

Date: MARCH 21, 2023

Sheet No:

M1.11A

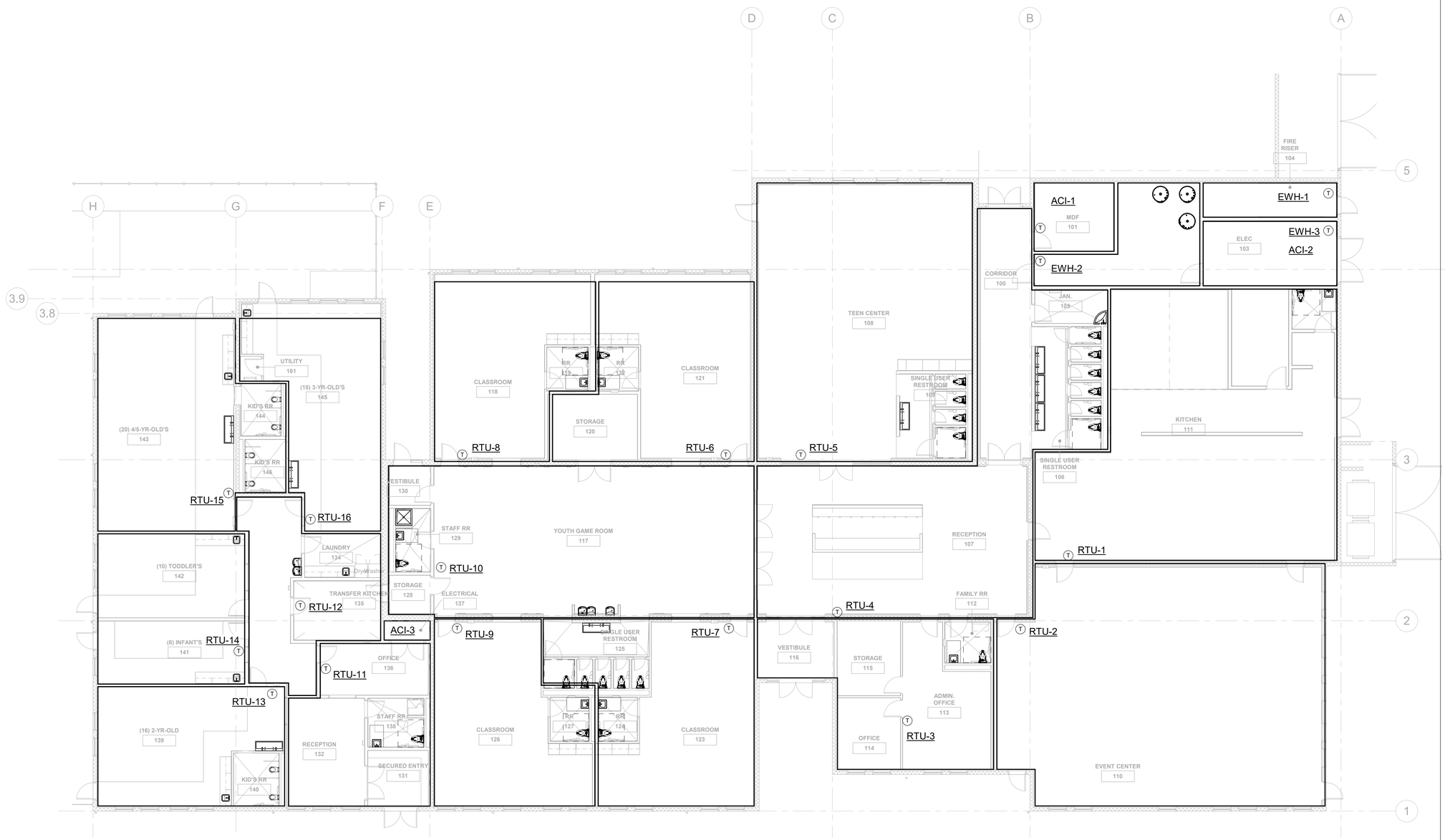

MECHANICAL PARTIAL ZONING PLAN - ATL. A

SCALE: 1/8" = 1'-0"

1 / M2.2

N

tsk

225 South Arlington Avenue
Reno NV, 89501
phone: 775.857.2949
fax: 775.857.2403
www.tska.com

THESE DRAWINGS AND SPECIFICATIONS ARE THE PROPERTY OF TATE SNYDER KIMSEY ARCHITECTS AND MAY NOT BE REPRODUCED OR USED FOR ANY PURPOSE WITHOUT THE ARCHITECTS WRITTEN CONSENT.
AS INSTRUMENTS OF SERVICE, THESE DOCUMENTS ARE NOT FINAL AND READY FOR USE, AND THEREFORE NOT VALID, UNLESS THEY ARE SEALED, SIGNED AND DATED.

Copyright, Ltd 2023

Consultant

AINSWORTH ASSOCIATES
MECHANICAL ENGINEERS
1420 HOLCOMB AVE., SUITE 201
RENO, NV 89502
TEL: 775-329-9100
4557 GREENVIEW DR.
EL DORADO HILLS, CA 95762
TEL: 916-737-6014
www.aa-me.com

JOB 2021-065

PLEASE RECYCLE

Project

CITY OF FERNLEY CRRC

Job No: 21-058.00

Owner

CITY OF FERNLEY

PROGRESS
NOT FOR CONSTRUCTION

50% CONSTRUCTION DOCUMENTS

REVISIONS		
REV	DATE	DESCRIPTION

Sheet Title

MECHANICAL PARTIAL ZONING PLAN - ALT. A

Date: MARCH 21, 2023

Sheet No:

M2.2

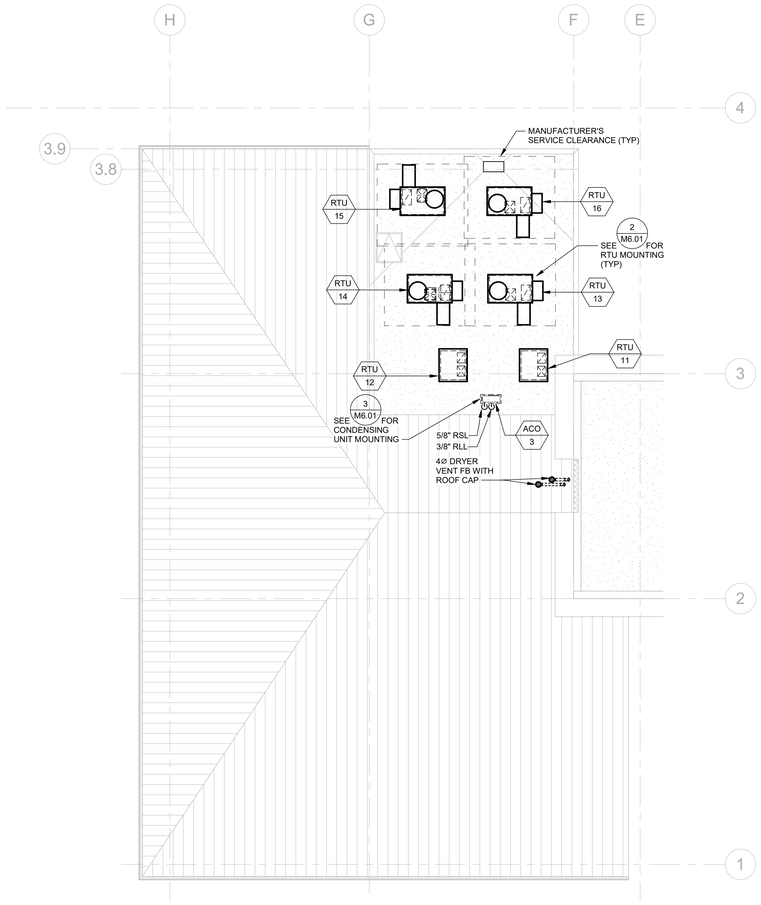

MECHANICAL PARTIAL ROOF PLAN - ALT. A

SCALE: 1/8" = 1'-0"

1 / M4.01A

N

tsk
225 South Arlington Avenue
Reno NV, 89501
phone: 775.857.2949
fax: 775.857.2403
www.tska.com

THESE DRAWINGS AND SPECIFICATIONS ARE THE PROPERTY OF TATE SNYDER KIMSEY ARCHITECTS AND MAY NOT BE REPRODUCED OR USED FOR ANY PURPOSE WITHOUT THE ARCHITECTS WRITTEN CONSENT.
AS INSTRUMENTS OF SERVICE, THESE DOCUMENTS ARE NOT FINAL AND READY FOR USE, AND THEREFORE NOT VALID, UNLESS THEY ARE SEALED, SIGNED AND DATED.

Copyright, Ltd 2023

Consultant

AINSWORTH ASSOCIATES
MECHANICAL ENGINEERS
1420 HOLCOMB AVE., SUITE 201
RENO, NV 89502
TEL: 775-329-9100
4557 GREENVIEW DR.
EL DORADO HILLS, CA 95762
TEL: 916-737-6014
www.aa-me.com

JOB 2021-065

PLEASE RECYCLE

Project

CITY OF FERNLEY CRRC

Job No: 21-058.00

Owner

CITY OF FERNLEY

PROGRESS
NOT FOR CONSTRUCTION

50% CONSTRUCTION DOCUMENTS

REVISIONS		
REV	DATE	DESCRIPTION

Sheet Title

MECHANICAL PARTIAL ROOF PLAN - ALT. A

Date: MARCH 21, 2023

Sheet No:

M4.01A

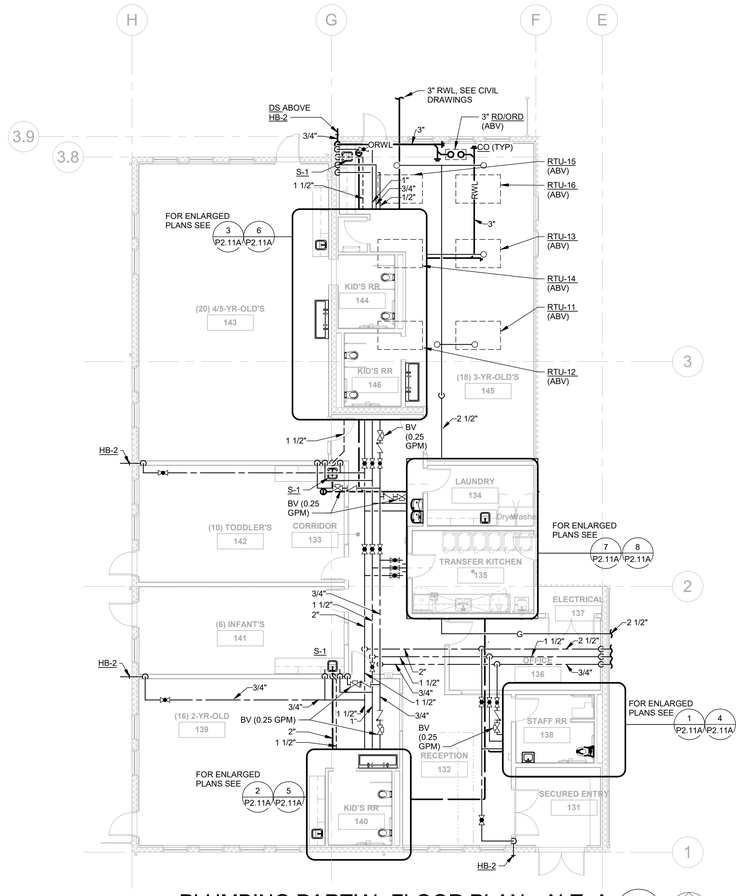

PLUMBING PARTIAL FLOOR PLAN - ALT. A

SCALE: 1/8" = 1'-0"

1 / P1.11A

N

tsk

225 South Arlington Avenue
Reno NV, 89501
phone: 775.857.2949
fax: 775.857.2403
www.tska.com

THESE DRAWINGS AND SPECIFICATIONS ARE THE PROPERTY OF TATE SNYDER KIMSEY ARCHITECTS AND MAY NOT BE REPRODUCED OR USED FOR ANY PURPOSE WITHOUT THE ARCHITECTS WRITTEN CONSENT.
AS INSTRUMENTS OF SERVICE, THESE DOCUMENTS ARE NOT FINAL AND READY FOR USE, AND THEREFORE NOT VALID, UNLESS THEY ARE SEALED, SIGNED AND DATED.

Copyright, Ltd 2023

Consultant

AINSWORTH ASSOCIATES
MECHANICAL ENGINEERS
1420 HOLCOMB AVE., SUITE 201
RENO, NV 89502
TEL: 775-329-9100
4557 GREENVIEW DR.
EL DORADO HILLS, CA 95762
TEL: 916-737-6014
www.aa-me.com

JOB 2021-065

PLEASE RECYCLE

Project

CITY OF FERNLEY CRRC

Job No: 21-058.00

Owner

CITY OF FERNLEY

PROGRESS
NOT FOR CONSTRUCTION

50% CONSTRUCTION DOCUMENTS

REVISIONS		
REV	DATE	DESCRIPTION

Sheet Title

PLUMBING PARTIAL FLOOR PLAN - ALT. A

Date: MARCH 21, 2023

Sheet No:

P1.11A

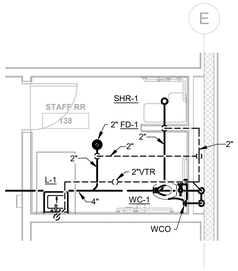

PLUMBING ENLARGED FLOOR PLAN - ALT. A - STAFF RR 138 WASTE AND VENT

SCALE: 1/4" = 1'-0"

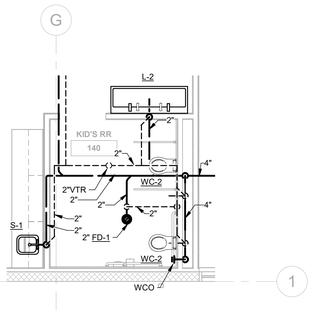

PLUMBING ENLARGED FLOOR PLAN - ALT. A - KIDS RR 140 WASTE AND VENT

SCALE: 1/4" = 1'-0"

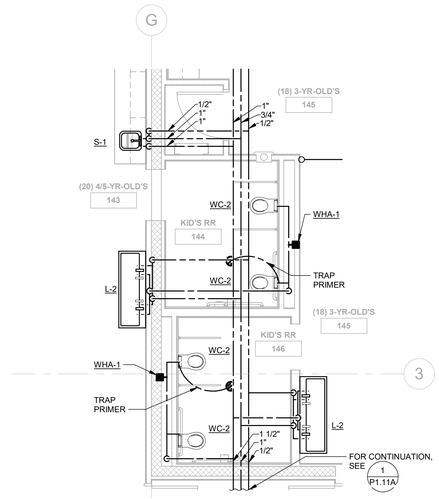

PLUMBING ENLARGED FLOOR PLAN - ALT. A - KIDS RR 144, 146 WATER AND UTILITIES

SCALE: 1/4" = 1'-0"

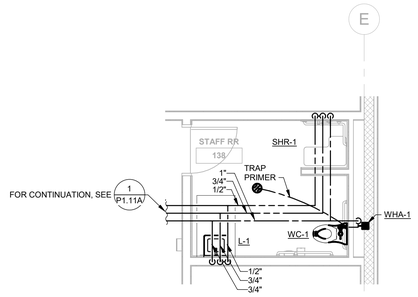

PLUMBING ENLARGED FLOOR PLAN - ALT. A - STAFF RR 138 WATER AND UTILITIES

SCALE: 1/4" = 1'-0"

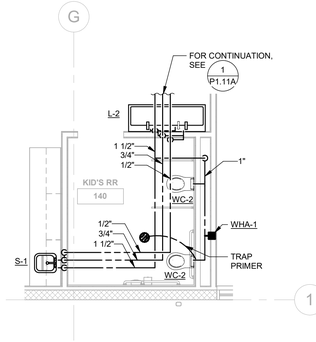

PLUMBING ENLARGED FLOOR PLAN - ALT. A - KIDS RR 140 WATER AND UTILITIES

SCALE: 1/4" = 1'-0"

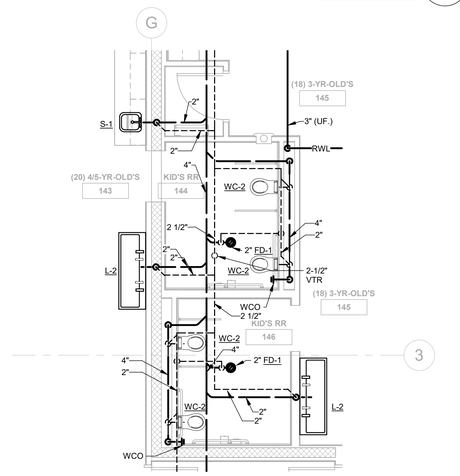

PLUMBING ENLARGED FLOOR PLAN - ALT. A - KIDS RR 144, 146 WASTE AND VENT

SCALE: 1/4" = 1'-0"

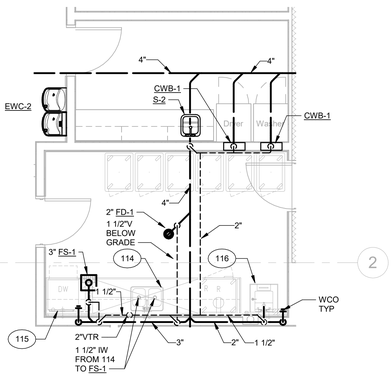

PLUMBING ENLARGED FLOOR PLAN - ALT. A - TRANSFER KITCHEN 135 WASTE AND VENT

SCALE: 1/4" = 1'-0"

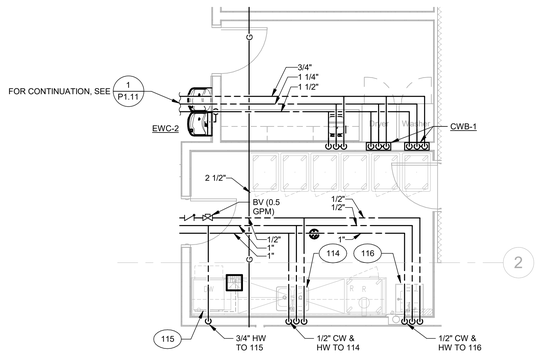

PLUMBING ENLARGED FLOOR PLAN - ALT. A - TRANSFER KITCHEN 135 WATER AND UTILITIES

SCALE: 1/4" = 1'-0"

tsk

225 South Arlington Avenue
Reno NV, 89501
phone: 775.857.2949
fax: 775.857.2403
www.tska.com

THESE DRAWINGS AND SPECIFICATIONS ARE THE PROPERTY OF TATE SNYDER KIMSEY ARCHITECTS AND MAY NOT BE REPRODUCED OR USED FOR ANY PURPOSE WITHOUT THE ARCHITECTS WRITTEN CONSENT. AS INSTRUMENTS OF SERVICE, THESE DOCUMENTS ARE NOT FINAL AND READY FOR USE, AND THEREFORE NOT VALID, UNLESS THEY ARE SEALED, SIGNED AND DATED.

Copyright, Ltd 2023

Consultant

AINSWORTH ASSOCIATES
MECHANICAL ENGINEERS
1420 HOLCOMB AVE., SUITE 201
RENO, NV 89502
TEL: 775-329-9100
4557 GREENVIEW DR.
EL DORADO HILLS, CA 95762
TEL: 916-737-6014
www.aa-me.com

JOB 2021-065

PLEASE RECYCLE

Project

CITY OF FERNLEY CRRC

Job No: 21-058.00

Owner

CITY OF FERNLEY

PROGRESS
NOT FOR CONSTRUCTION

50% CONSTRUCTION DOCUMENTS

REVISIONS		
REV	DATE	DESCRIPTION

Sheet Title

PLUMBING ENLARGED FLOOR PLANS - ALT. A

Date: MARCH 21, 2023

Sheet No:

P2.11A

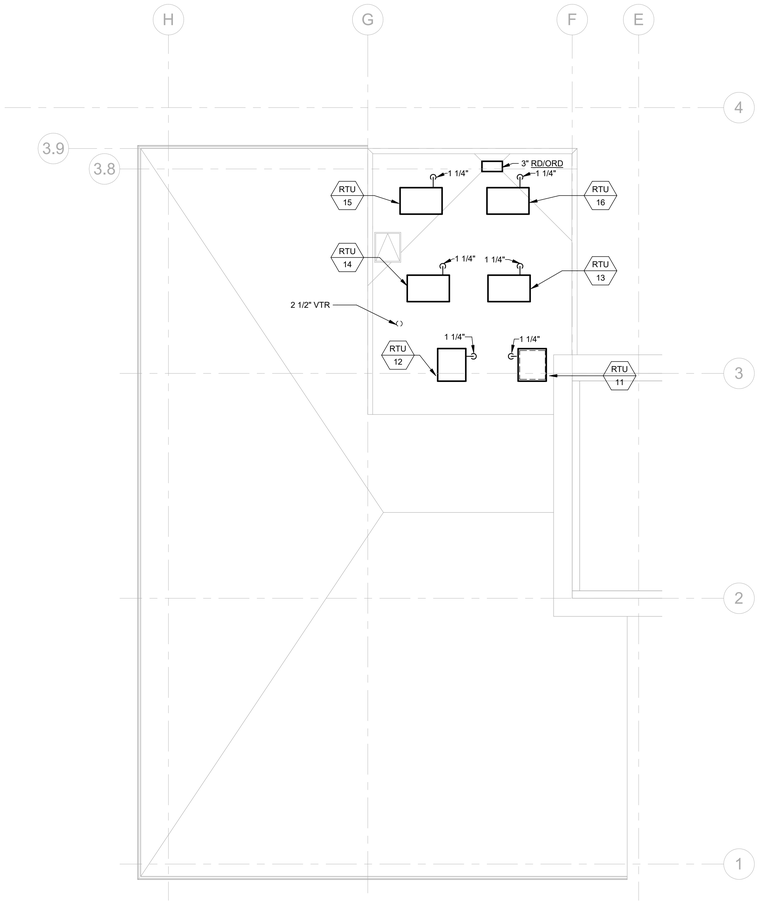

PLUMBING PARTIAL ROOF PLAN - ALT. A (1 / P4.01A)

SCALE: 1/8" = 1'-0"

N

tsk

225 South Arlington Avenue
Reno NV, 89501
phone: 775.857.2949
fax: 775.857.2403
www.tska.com

THESE DRAWINGS AND SPECIFICATIONS ARE THE PROPERTY OF TATE SNYDER KIMSEY ARCHITECTS AND MAY NOT BE REPRODUCED OR USED FOR ANY PURPOSE WITHOUT THE ARCHITECTS WRITTEN CONSENT.
AS INSTRUMENTS OF SERVICE, THESE DOCUMENTS ARE NOT FINAL AND READY FOR USE, AND THEREFORE NOT VALID, UNLESS THEY ARE SEALED, SIGNED AND DATED.

Copyright, Ltd 2023

Consultant

AINSWORTH ASSOCIATES
MECHANICAL ENGINEERS
1420 HOLCOMB AVE., SUITE 201
RENO, NV 89502
TEL: 775-329-9100
4557 GREENVIEW DR.
EL DORADO HILLS, CA 95762
TEL: 916-737-6014
www.aa-me.com

JOB 2021-065

PLEASE RECYCLE

Project

CITY OF FERNLEY CRRC

Job No: 21-058.00

Owner

CITY OF FERNLEY

PROGRESS
NOT FOR CONSTRUCTION

50% CONSTRUCTION DOCUMENTS

REVISIONS		
REV	DATE	DESCRIPTION

Sheet Title

PLUMBING PARTIAL ROOF PLAN - ALT. A

Date: MARCH 21, 2023

Sheet No:

P4.01A

GENERAL NOTES

1. (E) AND/OR SOLID HALFTONE LINES INDICATE EXISTING EQUIPMENT, (R) AND/OR DASHED LINES INDICATE RELOCATED EQUIPMENT, (N) AND/OR SOLID LINES INDICATE NEW EQUIPMENT UNLESS NOTED OTHERWISE.
2. LIGHTING FIXTURES DESIGNATED AS 'EMERGENCY' SHALL BE WIRED TO OPERATE WITH LOCAL SWITCHING UNDER NORMAL POWER CONDITIONS AND SHALL OPERATE VIA EMERGENCY BATTERY PACK OR INVERTER UPON LOSS OF BUILDING UTILITY POWER ONLT, UNLESS NOTED OTHERWISE.
3. EXIT SIGNS SHALL BE WIRED AHEAD OF LOCAL SWITCHING AND LIGHTING CONTROL PANEL FOR CONTINUOUS OPERATION. EXIT SIGNS SHALL BE WALL-MOUNTED ABOVE DOORS WHERE PRACTICAL. PROVIDE ADDITIONAL EXIT SIGNS AS NECESSARY FOR APPROVAL BY THE AUTHORITY HAVING JURISDICTION, PER ARCHITECT'S FINAL PATH OF EGRESS / EXITING PLAN.
4. ELECTRICAL CONDUITS SHALL BE RUN CONCEALED WHERE BUILDING CONSTRUCTION ALLOWS. ANY EXPOSED CONDUIT SHALL BE APPROVED BY THE ARCHITECT PRIOR TO INSTALLATION. ANY EXPOSED CONDUIT, FITTING, SUPPORTS, ETC SHALL BE PAINTED TO MATCH THE SURFACE ON WHICH THEY ARE INSTALLED.
5. REFER TO ARCHITECTURAL REFLECTED CEILING PLANS, SECTIONS, ELEVATIONS, ETC. FOR EXACT LOCATION OF LIGHTING FIXTURES.
6. EXACT LOCATION AND MOUNTING HEIGHT OF EXTERIOR BUILDING-MOUNTED FIXTURES SHALL BE COORDINATED WITH ARCHITECT PRIOR TO ROUGH-IN.
7. CONTRACTOR SHALL BE RESPONSIBLE FOR COORDINATING FINAL FIXTURE LOCATIONS, ABOVE-CEILING HOUSING CLEARANCES, ETC. WITH MECHANICAL, PLUMBING, SPRINKLER CONTRACTOR AND OTHER TRADES PRIOR TO ROUGH-IN.
8. PROVIDE MULTIPLE-GANG FACEPLATES AS NECESSARY WHERE TWO OR MORE LIGHT SWITCHES ARE INDICATED IN A COMMON LOCATION. SINGLE-GANG FACEPLATES FOR A GROUP OF LIGHT SWITCHES ARE NOT PERMITTED.
9. PROVIDE STAINLESS STEEL DEVICE PLATES IN KITCHEN AND ROUGH-SERVICE AREAS.
10. CONDUIT FOR BUILDING-MOUNTED LIGHT FIXTURES SHALL BE ROUTED THROUGH INTERIOR OF BUILDING. LIGHT FIXTURE BACKBOXES SHALL BE RECESSED.

SHEET NOTES

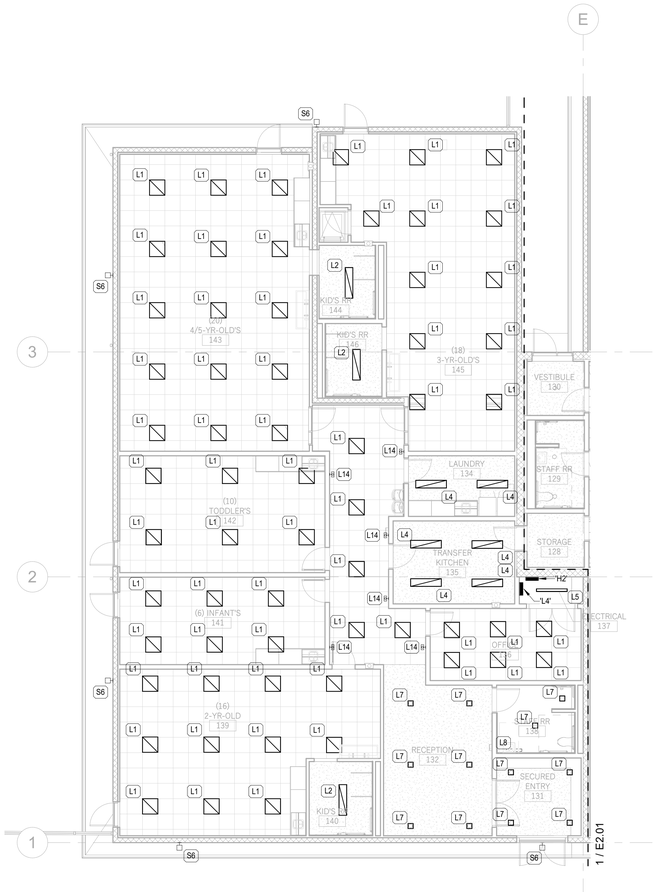

1 E2.01A LIGHTING PLAN - ALT A
Scale: 1/8" = 1'-0"

tsk
225 South Arlington Avenue
Reno NV, 89501
phone: 775.857.2949
fax: 775.857.2403
www.tska.com

THESE DRAWINGS AND SPECIFICATIONS ARE THE PROPERTY OF TATE SNYDER KIMSEY ARCHITECTS AND MAY NOT BE REPRODUCED OR USED FOR ANY PURPOSE WITHOUT THE ARCHITECTS WRITTEN CONSENT. AS INSTRUMENTS OF SERVICE, THESE DOCUMENTS ARE NOT FINAL AND READY FOR USE, AND THEREFORE NOT VALID, UNLESS THEY ARE SEALED, SIGNED AND DATED.

Copyright, Ltd 2023

Consultant

PK Electrical, Inc.
Engineering Design Consulting
681 Sierra Rose Drive, Suite B | Reno, NV 89511 | 775.826.9010
4601 DTC Boulevard, Suite 740 | Denver, CO 80237 | 720.481.3290
pkelectrical.com

PLEASE RECYCLE

Project
CITY OF FERNLEY CRRC

Job No: 21-058.00

Owner
CITY OF FERNLEY

50% CONSTRUCTION DOCUMENTS

REVISIONS		
REV	DATE	DESCRIPTION

Sheet Title
LIGHTING PLAN - ALT A

Date: MARCH 21, 2023

Sheet No:
E2.01A

GENERAL NOTES

1. (E) AND/OR SOLID HALFTONE LINES INDICATE EXISTING EQUIPMENT, (R) AND/OR DASHED LINES INDICATE RELOCATED EQUIPMENT, (N) AND/OR SOLID LINES INDICATE NEW EQUIPMENT UNLESS NOTED OTHERWISE.
2. CONTRACTOR SHALL COORDINATE FINAL RECEPTACLE LOCATIONS WITH TELECOM OUTLETS PRIOR TO ROUGH-IN. EACH TELECOM OUTLET SHALL HAVE A RECEPTACLE LOCATED WITHIN 12", MEASURED FROM CENTER OF DEVICES.
3. MODULAR FURNITURE: ELECTRICAL CONTRACTOR RESPONSIBLE FOR ON-SITE COORDINATION WITH FURNITURE SUPPLIER TO VERIFY FINAL WIRING REQUIREMENTS, CIRCUITING, J-BOX LOCATIONS, ETC. PRIOR TO ROUGH-IN. ELECTRICAL CONTRACTOR TO PROVIDE ALL HARDWARE AND ACCESSORIES NECESSARY FOR A COMPLETE INSTALLATION. FURNITURE SUPPLIER TO PROVIDE POWER WHIPS, ELECTRICAL CONTRACTOR TO MAKE FINAL CONNECTIONS TO FURNITURE. DESIGN INTENT OF THESE DRAWINGS ASSUMES 3-CIRCUIT, 8-WIRE MODULAR FURNITURE SYSTEM (3H, 3N, G, DED, G). NO MORE THAN SIX (6) WORKSTATIONS PER EACH 3-CIRCUIT GROUP, UNLESS NOTED OTHERWISE.
4. COORDINATE EXACT MOUNTING HEIGHTS AND LOCATIONS OF GENERAL RECEPTACLES, SPECIAL OUTLETS AND DISCONNECT SWITCHES IN SHOP AREAS WITH OWNER AND EQUIPMENT SUPPLIERS PRIOR TO ROUGH-IN.
5. CONDUITS FOR ROOF-MOUNTED DEVICES AND EQUIPMENT SHALL BE RUN BELOW ROOF DECK/SYSTEM. ROOF MOUNTED CONDUITS WILL ONLY BE CONSIDERED AND APPROVED IN WRITING BY THE ARCHITECT/ENGINEER.
6. VERIFY EXACT ELECTRICAL REQUIREMENTS, PLUG CONFIGURATIONS, ETC., AND FINAL LOCATIONS OF OWNER-PROVIDED EQUIPMENT WITH OWNER'S REPRESENTATIVE PRIOR TO ORDERING OF MATERIALS AND ROUGH-IN.

SHEET NOTES

P01 POWERED AUTOMATIC VALVE JUNCTION BOX FLUSH IN WALL. COORDINATE ROUGH-IN WITH PLUMBING CONTRACTOR. INSTALL POWER SUPPLY IN ACCESSIBLE LOCATION. CONNECT ALL VALVES AS REQUIRED FOR COMPLETE SYSTEM.

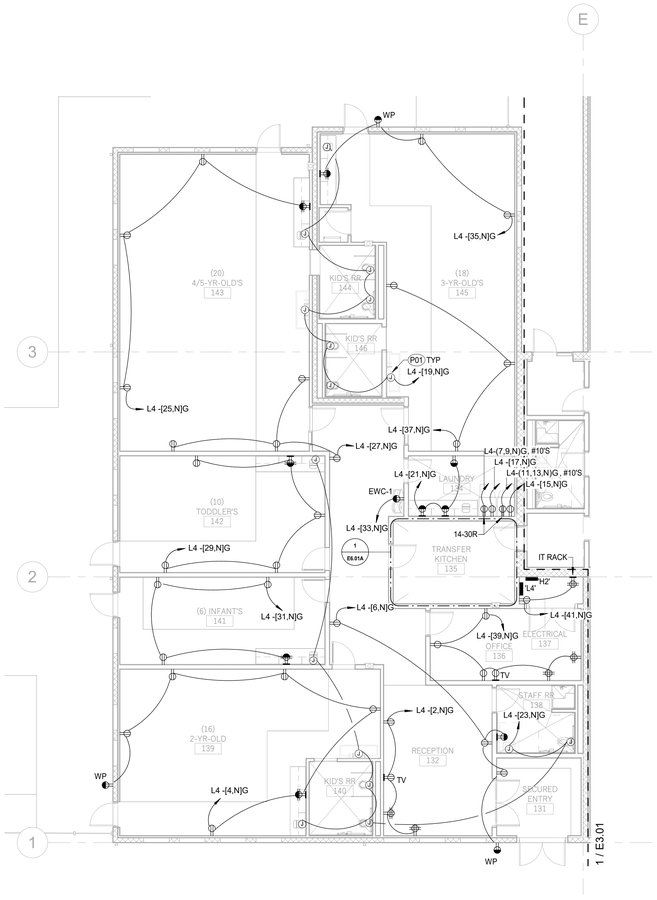

1 E3.01A POWER PLAN - ALT A
Scale: 1/8" = 1'-0"

tsk
225 South Arlington Avenue
Reno NV, 89501
phone: 775.857.2949
fax: 775.857.2403
www.tska.com

THESE DRAWINGS AND SPECIFICATIONS ARE THE PROPERTY OF TATE SNYDER KIMSEY ARCHITECTS AND MAY NOT BE REPRODUCED OR USED FOR ANY PURPOSE WITHOUT THE ARCHITECTS WRITTEN CONSENT. AS INSTRUMENTS OF SERVICE, THESE DOCUMENTS ARE NOT FINAL AND READY FOR USE, AND THEREFORE NOT VALID, UNLESS THEY ARE SEALED, SIGNED AND DATED.

Copyright, Ltd 2023

Consultant

PK Electrical, Inc.
Engineering Design Consulting
681 Sierra Rose Drive, Suite B | Reno, NV 89511 | 775.826.9010
4601 DTC Boulevard, Suite 740 | Denver, CO 80237 | 720.481.3290
pkelectrical.com

PLEASE RECYCLE

Project
CITY OF FERNLEY CRRC

Job No: 21-058.00

Owner
CITY OF FERNLEY

50% CONSTRUCTION DOCUMENTS

REVISIONS		
REV	DATE	DESCRIPTION

Sheet Title
POWER PLAN - ALT A

Date: MARCH 21, 2023
Sheet No:
E3.01A

MECHANICAL EQUIPMENT SCHEDULE - ALT A										
EQUIPMENT ID	EQUIPMENT DESCRIPTION	VOLTAGE	POLES	WATTAGE	WIRE SIZE (#12 UNO)	DISCONNECT	NEMA RATING	FUSE SIZE	PANEL - CIRCUIT	NOTES
ACI-3	SPLIT SYSTEM	120 V	1	0 VA	PER MANUF.	HARDWIRE				FED FROM OUTDOOR UNIT
DBF-1 / DBF-2	DRYER BOOSTER FANS	120 V	1	180 VA		RECEPTACLE	NEMA 5-20R		L4 - 16	LOCATE CLEAR OF EQUIPMENT
EF-7	EXHAUST FAN	120 V	1	25 VA		HARDWIRE				SEE NOTES.
EF-8	EXHAUST FAN	120 V	1	25 VA		HARDWIRE				SEE NOTES.
EF-9	EXHAUST FAN	120 V	1	25 VA		HARDWIRE				SEE NOTES.
EF-10	EXHAUST FAN	120 V	1	25 VA		HARDWIRE				SEE NOTES.

GENERAL NOTES

1. (E) AND/OR SOLID HALFTONE LINES INDICATE EXISTING EQUIPMENT, (R) AND/OR DASHED LINES INDICATE RELOCATED EQUIPMENT, (N) AND/OR SOLID LINES INDICATE NEW EQUIPMENT UNLESS NOTED OTHERWISE.
2. THE CONTRACTOR SHALL OBTAIN ALL WIRING DIAGRAMS ASSOCIATED WITH THE MECHANICAL EQUIPMENT CONTROLS FROM THE MECHANICAL/CONTROLS CONTRACTOR. CONTROL WIRING SHALL BE PROVIDED AND INSTALLED BY CONTROLS CONTRACTOR. ANY CONDUIT REQUIRED FOR CONTROL WIRING SHALL BE PROVIDED AND INSTALLED BY ELECTRICAL CONTRACTOR AND SHALL BE COMPLETED UNDER THE SUPERVISION OF THE MECHANICAL/CONTROLS CONTRACTOR.
3. REFER TO MECHANICAL DRAWINGS FOR MECHANICAL UNIT MODEL NUMBERS AND SPECIFIC ELECTRICAL REQUIREMENTS, OPTIONS AND ACCESSORIES.
4. INFORMATION ON ARCHITECTURAL AND MECHANICAL DRAWINGS SUPERSEDE INFORMATION SHOWN ON ELECTRICAL DRAWINGS. ELECTRICAL CONTRACTOR SHALL COORDINATE WITH ARCHITECTURAL AND MECHANICAL DRAWINGS PRIOR TO ROUGH-IN.
5. ELECTRICAL CONTRACTOR IS RESPONSIBLE FOR VERIFYING ELECTRICAL REQUIREMENTS FOR FINAL MECHANICAL EQUIPMENT INSTALLED. SHOULD THERE BE ANY DISCREPANCY BETWEEN ACTUAL EQUIPMENT INSTALLED AND ELECTRICAL OR MECHANICAL DRAWINGS, CONTRACTOR SHALL NOTIFY ENGINEER IMMEDIATELY FOR CLARIFICATION AND FURTHER DIRECTION.
6. LOCATE ALL DISCONNECTS, STARTERS AND DRIVES WHERE ACCESSIBLE. PROVIDE ACCESS AND CLEARANCE AS REQUIRED PER NEC. PROVIDE ACCESS HATCH IF LOCATED ABOVE HARD LID CEILING.
7. DISCONNECT SWITCHES, STARTERS OR DRIVES PROVIDED BY MECHANICAL AND SHIPPED LOOSE ARE THE RESPONSIBILITY OF THE ELECTRICAL CONTRACTOR TO INSTALL.
8. PIPING AND / OR DUCTWORK SHALL NOT BE ROUTED IN THE DEDICATED ELECTRICAL EQUIPMENT SPACE AT OR ABOVE ELECTRICAL SWITCHBOARDS, DISTRIBUTION BOARDS, PANELBOARDS, ETC. (PER 2011 NEC 110.26E). PROVIDE DEPTH AND WIDTH OF WORKING SPACE FOR ELECTRICAL EQUIPMENT AS REQUIRED PER 2011 NEC 110.26.

SHEET NOTES

P03 FAN TO OPERATE WITH ROOM OCCUPANCY SENSOR.

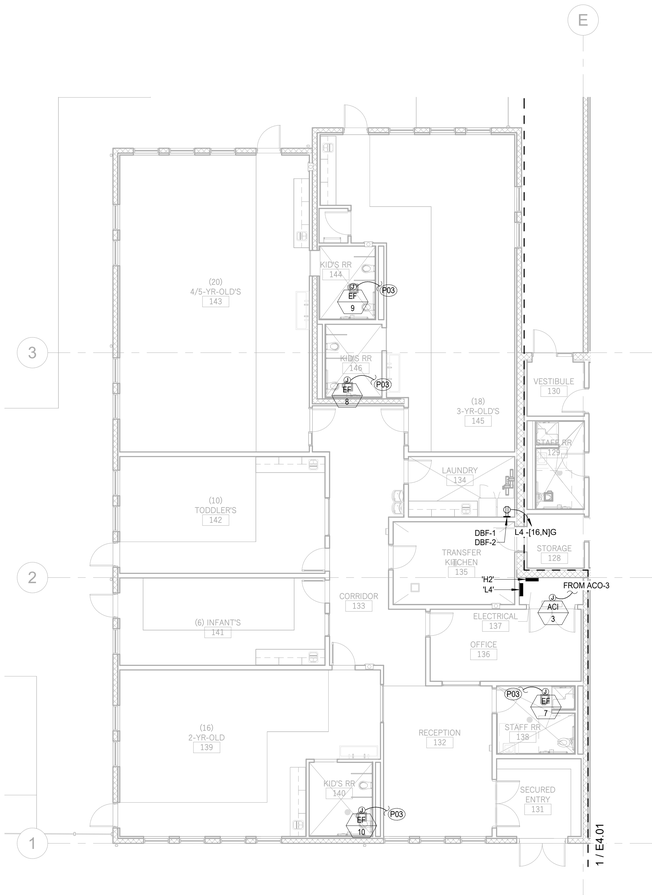

1 E4.01A MECHANICAL POWER PLAN - ALT A

Scale: 1/8" = 1'-0"

tsk
225 South Arlington Avenue
Reno NV, 89501
phone: 775.857.2949
fax: 775.857.2403
www.tska.com

THESE DRAWINGS AND SPECIFICATIONS ARE THE PROPERTY OF TATE SNYDER KIMSEY ARCHITECTS AND MAY NOT BE REPRODUCED OR USED FOR ANY PURPOSE WITHOUT THE ARCHITECTS WRITTEN CONSENT. AS INSTRUMENTS OF SERVICE, THESE DOCUMENTS ARE NOT FINAL AND READY FOR USE, AND THEREFORE NOT VALID, UNLESS THEY ARE SEALED, SIGNED AND DATED.

Copyright, Ltd 2023

Consultant

PK Electrical, Inc.
Engineering Design Consulting
681 Sierra Rose Drive, Suite B | Reno, NV 89511 | 775.826.9010
4601 DTC Boulevard, Suite 740 | Denver, CO 80237 | 720.481.3290
pkelectrical.com

PLEASE RECYCLE

Project
CITY OF FERNLEY CRRC

Job No: 21-058.00

Owner
CITY OF FERNLEY

50% CONSTRUCTION DOCUMENTS

REVISIONS		
REV	DATE	DESCRIPTION

Sheet Title
MECHANICAL POWER PLAN - ALT A

Date: MARCH 21, 2023

Sheet No:
E4.01A

MECHANICAL EQUIPMENT SCHEDULE - ALT A ROOF										
EQUIPMENT ID	EQUIPMENT DESCRIPTION	VOLTAGE	POLES	WATTAGE	WIRE SIZE (#12 UNO)	DISCONNECT	NEMA RATING	FUSE SIZE	PANEL - CIRCUIT	NOTES
ACO-3	SPLIT SYSTEM	208 V	2	4992 VA	#10'S	30A	3R		L4 - 1,3	
RTU-11	ROOF TOP UNIT	480 V	3	9972 VA		30A	3R	15A	H2 - 10,12,14	
RTU-12	ROOF TOP UNIT	480 V	3	9972 VA		30A	3R	15A	H2 - 4,6,8	
RTU-13	ROOF TOP UNIT	480 V	3	9972 VA		30A	3R	15A	H2 - 16,18,20	
RTU-14	ROOF TOP UNIT	480 V	3	11643 VA		30A	3R	20A	H2 - 13,15,17	
RTU-15	ROOF TOP UNIT	480 V	3	9972 VA		30A	3R	15A	H2 - 7,9,11	
RTU-16	ROOF TOP UNIT	480 V	3	9972 VA		30A	3R	15A	H2 - 1,3,5	

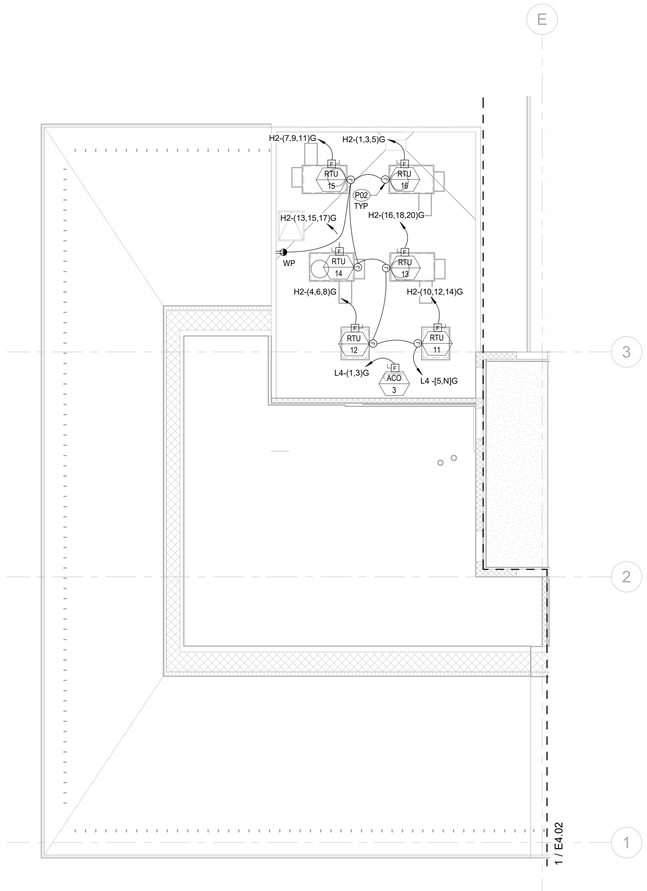

1 E4.02A — ROOF MECHANICAL POWER PLAN - ALT A

Scale: 1/8" = 1'-0"

GENERAL NOTES

1. (E) AND/OR SOLID HALFTONE LINES INDICATE EXISTING EQUIPMENT, (R) AND/OR DASHED LINES INDICATE RELOCATED EQUIPMENT, (N) AND/OR SOLID LINES INDICATE NEW EQUIPMENT UNLESS NOTED OTHERWISE.
2. THE CONTRACTOR SHALL OBTAIN ALL WIRING DIAGRAMS ASSOCIATED WITH THE MECHANICAL EQUIPMENT CONTROLS FROM THE MECHANICAL/CONTROLS CONTRACTOR. CONTROL WIRING SHALL BE PROVIDED AND INSTALLED BY CONTROLS CONTRACTOR. ANY CONDUIT REQUIRED FOR CONTROL WIRING SHALL BE PROVIDED AND INSTALLED BY ELECTRICAL CONTRACTOR AND SHALL BE COMPLETED UNDER THE SUPERVISION OF THE MECHANICAL/CONTROLS CONTRACTOR.
3. REFER TO MECHANICAL DRAWINGS FOR MECHANICAL UNIT MODEL NUMBERS AND SPECIFIC ELECTRICAL REQUIREMENTS, OPTIONS AND ACCESSORIES.
4. INFORMATION ON ARCHITECTURAL AND MECHANICAL DRAWINGS SUPERSEDE INFORMATION SHOWN ON ELECTRICAL DRAWINGS. ELECTRICAL CONTRACTOR SHALL COORDINATE WITH ARCHITECTURAL AND MECHANICAL DRAWINGS PRIOR TO ROUGH-IN.
5. ELECTRICAL CONTRACTOR IS RESPONSIBLE FOR VERIFYING ELECTRICAL REQUIREMENTS FOR FINAL MECHANICAL EQUIPMENT INSTALLED. SHOULD THERE BE ANY DISCREPANCY BETWEEN ACTUAL EQUIPMENT INSTALLED AND ELECTRICAL OR MECHANICAL DRAWINGS, CONTRACTOR SHALL NOTIFY ENGINEER IMMEDIATELY FOR CLARIFICATION AND FURTHER DIRECTION.
6. LOCATE ALL DISCONNECTS, STARTERS AND DRIVES WHERE ACCESSIBLE. PROVIDE ACCESS AND CLEARANCE AS REQUIRED PER NEC. PROVIDE ACCESS HATCH IF LOCATED ABOVE HARD LID CEILING.
7. DISCONNECT SWITCHES, STARTERS OR DRIVES PROVIDED BY MECHANICAL AND SHIPPED LOOSE ARE THE RESPONSIBILITY OF THE ELECTRICAL CONTRACTOR TO INSTALL.
8. PIPING AND / OR DUCTWORK SHALL NOT BE ROUTED IN THE DEDICATED ELECTRICAL EQUIPMENT SPACE AT OR ABOVE ELECTRICAL SWITCHBOARDS, DISTRIBUTION BOARDS, PANELBOARDS, ETC. (PER 2011 NEC 110.26E). PROVIDE DEPTH AND WIDTH OF WORKING SPACE FOR ELECTRICAL EQUIPMENT AS REQUIRED PER 2011 NEC 110.26.

SHEET NOTES

P02 CONNECT TO 120V/20A GFCI RECEPTACLE FURNISHED WITH UNIT.

tsk
225 South Arlington Avenue
Reno NV, 89501
phone: 775.857.2949
fax: 775.857.2403
www.tska.com

THESE DRAWINGS AND SPECIFICATIONS ARE THE PROPERTY OF TATE SNYDER KIMSEY ARCHITECTS AND MAY NOT BE REPRODUCED OR USED FOR ANY PURPOSE WITHOUT THE ARCHITECTS WRITTEN CONSENT. AS INSTRUMENTS OF SERVICE, THESE DOCUMENTS ARE NOT FINAL AND READY FOR USE, AND THEREFORE NOT VALID, UNLESS THEY ARE SEALED, SIGNED AND DATED.

Copyright, Ltd 2023

Consultant

PK Electrical, Inc.
Engineering Design Consulting
681 Sierra Rose Drive, Suite B | Reno, NV 89511 | 775.826.9010
4601 DTC Boulevard, Suite 740 | Denver, CO 80237 | 720.481.3290
pkelectrical.com

PLEASE RECYCLE

Project
CITY OF FERNLEY CRRC

Job No: 21-058.00

Owner
CITY OF FERNLEY

50% CONSTRUCTION DOCUMENTS

REVISIONS		
REV	DATE	DESCRIPTION

Sheet Title
ROOF MECHANICAL POWER PLAN - ALT A

Date: MARCH 21, 2023

Sheet No:
E4.02A

GENERAL NOTES

1. (E) AND/OR SOLID HALFTONE LINES INDICATE EXISTING EQUIPMENT, (R) AND/OR DASHED LINES INDICATE RELOCATED EQUIPMENT, (N) AND/OR SOLID LINES INDICATE NEW EQUIPMENT UNLESS NOTED OTHERWISE.
2. COORDINATE DEVICE PLACEMENT IN CEILING WITH OTHER TRADES, SUCH AS LIGHTING, TELECOM, MECHANICAL, ETC. ALL FIRE ALARM DEVICES LOCATED IN CEILING TILES SHALL BE LOCATED IN THE CENTER OF THE CEILING TILE UNLESS SPECIFICALLY NOTED OR APPROVED TO DO OTHERWISE.
3. INFORMATION ON ARCHITECTURAL AND MECHANICAL DRAWINGS SUPERSEDE INFORMATION SHOWN ON ELECTRICAL DRAWINGS. ELECTRICAL CONTRACTOR SHALL COORDINATE WITH ARCHITECTURAL AND MECHANICAL DRAWINGS PRIOR TO ROUGH-IN.

(###) SHEET NOTES

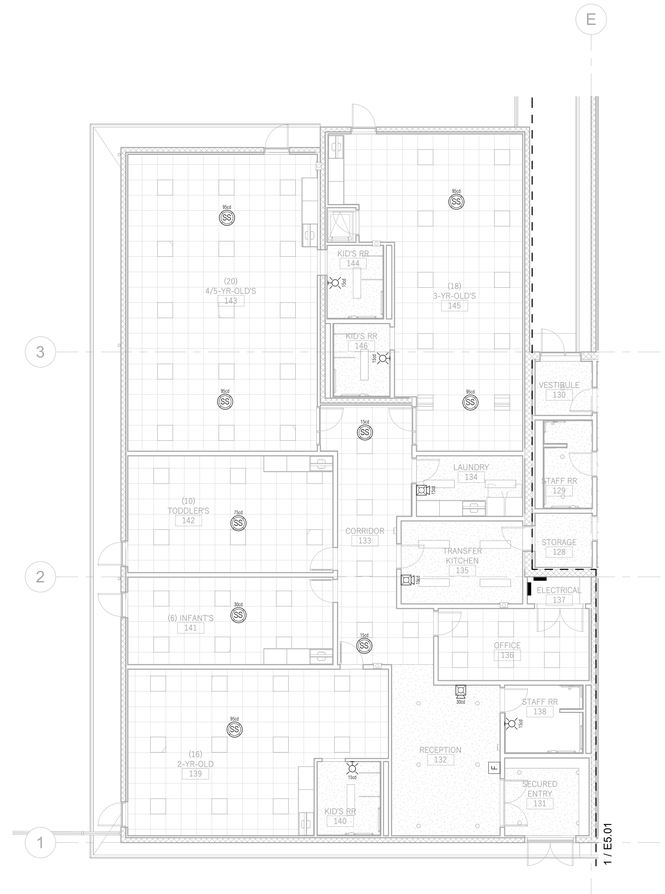

1 E5.01A FIRE ALARM PLAN - ALT A
Scale: 1/8" = 1'-0"

tsk
225 South Arlington Avenue
Reno NV, 89501
phone: 775.857.2949
fax: 775.857.2403
www.tska.com

THESE DRAWINGS AND SPECIFICATIONS ARE THE PROPERTY OF TATE SNYDER KIMSEY ARCHITECTS AND MAY NOT BE REPRODUCED OR USED FOR ANY PURPOSE WITHOUT THE ARCHITECTS WRITTEN CONSENT.
AS INSTRUMENTS OF SERVICE, THESE DOCUMENTS ARE NOT FINAL AND READY FOR USE, AND THEREFORE NOT VALID, UNLESS THEY ARE SEALED, SIGNED AND DATED.
Copyright, Ltd 2023

Consultant

PK Electrical, Inc.
Engineering Design Consulting
681 Sierra Rose Drive, Suite B | Reno, NV 89511 | 775.826.9010
4601 DTC Boulevard, Suite 740 | Denver, CO 80237 | 720.481.3290
pkelectrical.com

PLEASE RECYCLE

Project
CITY OF FERNLEY CRRC

Job No: 21-058.00

Owner
CITY OF FERNLEY

50% CONSTRUCTION DOCUMENTS

REVISIONS		
REV	DATE	DESCRIPTION

Sheet Title
FIRE ALARM PLAN - ALT A

Date: MARCH 21, 2023
Sheet No:
E5.01A

KITCHEN EQUIPMENT SCHEDULE - EARLY LEARNING

EQUIPMENT ID	EQUIPMENT DESCRIPTION	VOLTAGE	POLES	WATTAGE	WIRE SIZE (#12 UNO)	DISCONNECT	NEMA RATING	FUSE SIZE	PANEL - CIRCUIT	NOTES
K111	WORK COUNTER	120 V	1	900 VA		GFCI RECEPTACLE	NEMA 5-20R		L4 - 8	
K111	WORK COUNTER	120 V	1	900 VA		GFCI RECEPTACLE	NEMA 5-20R		L4 - 8	
K112	UNDERCOUNTER REFIGERATOR	120 V	1	240 VA		RECEPTACLE	NEMA 5-15R		L4 - 10	
K115	UNDERCOUNTER DISHWASHER	120 V	1	1440 VA		RECEPTACLE	NEMA 5-15R		L4 - 12	

GENERAL NOTES

1. (E) AND/OR SOLID HALFTONE LINES INDICATE EXISTING EQUIPMENT, (R) AND/OR DASHED LINES INDICATE RELOCATED EQUIPMENT, (N) AND/OR SOLID LINES INDICATE NEW EQUIPMENT UNLESS NOTED OTHERWISE.
2. CONTRACTOR SHALL COORDINATE FINAL RECEPTACLE LOCATIONS WITH TELECOM OUTLETS PRIOR TO ROUGH-IN. EACH TELECOM OUTLET SHALL HAVE A RECEPTACLE LOCATED WITHIN 12", MEASURED FROM CENTER OF DEVICES.
3. MODULAR FURNITURE: ELECTRICAL CONTRACTOR RESPONSIBLE FOR ON-SITE COORDINATION WITH FURNITURE SUPPLIER TO VERIFY FINAL WIRING REQUIREMENTS, CIRCUITING, J-BOX LOCATIONS, ETC, PRIOR TO ROUGH-IN. ELECTRICAL CONTRACTOR TO PROVIDE ALL HARDWARE AND ACCESSORIES NECESSARY FOR A COMPLETE INSTALLATION. FURNITURE SUPPLIER TO PROVIDE POWER WHIPS, ELECTRICAL CONTRACTOR TO MAKE FINAL CONNECTIONS TO FURNITURE. DESIGN INTENT OF THESE DRAWINGS ASSUMES 3-CIRCUIT, 8-WIRE MODULAR FURNITURE SYSTEM (3H, 3N, G, DED, G). NO MORE THAN SIX (6) WORKSTATIONS PER EACH 3-CIRCUIT GROUP, UNLESS NOTED OTHERWISE.
4. COORDINATE EXACT MOUNTING HEIGHTS AND LOCATIONS OF GENERAL RECEPTACLES, SPECIAL OUTLETS AND DISCONNECT SWITCHES IN SHOP AREAS WITH OWNER AND EQUIPMENT SUPPLIERS PRIOR TO ROUGH-IN.
5. CONDUITS FOR ROOF-MOUNTED DEVICES AND EQUIPMENT SHALL BE RUN BELOW ROOF DECK/SYSTEM. ROOF MOUNTED CONDUITS WILL ONLY BE CONSIDERED AND APPROVED IN WRITING BY THE ARCHITECT/ENGINEER.
6. VERIFY EXACT ELECTRICAL REQUIREMENTS, PLUG CONFIGURATIONS, ETC., AND FINAL LOCATIONS OF OWNER-PROVIDED EQUIPMENT WITH OWNER'S REPRESENTATIVE PRIOR TO ORDERING OF MATERIALS AND ROUGH-IN.

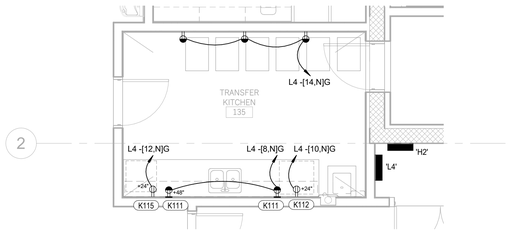

1 E6.01A ENLARGED KITCHEN POWER PLAN - ALT A

Scale: 1/4" = 1'-0"

tsk
225 South Arlington Avenue
Reno NV, 89501
phone: 775.857.2949
fax: 775.857.2403
www.tska.com

THESE DRAWINGS AND SPECIFICATIONS ARE THE PROPERTY OF TATE SNYDER KIMSEY ARCHITECTS AND MAY NOT BE REPRODUCED OR USED FOR ANY PURPOSE WITHOUT THE ARCHITECTS WRITTEN CONSENT. AS INSTRUMENTS OF SERVICE, THESE DOCUMENTS ARE NOT FINAL AND READY FOR USE, AND THEREFORE NOT VALID, UNLESS THEY ARE SEALED, SIGNED AND DATED.

Copyright, Ltd 2023

Consultant

PK Electrical, Inc.
Engineering Design Consulting
681 Sierra Rose Drive, Suite B | Reno, NV 89511 | 775.826.9010
4601 DTC Boulevard, Suite 740 | Denver, CO 80237 | 720.481.3290
pkelectrical.com

PLEASE RECYCLE

Project
CITY OF FERNLEY CRRC

Job No: 21-058.00

Owner
CITY OF FERNLEY

50% CONSTRUCTION DOCUMENTS

REVISIONS		
REV	DATE	DESCRIPTION

Sheet Title
KITCHEN POWER PLAN - ALT A

Date: MARCH 21, 2023

Sheet No:
E6.01A

GENERAL NOTES

1. ALL TELECOMMUNICATIONS CABELING SHOWB ON THIS SHEET SHALL TERMINATE IN MDF ROOM 101 (UNLESS OTHERWISE NOTED)
2. LOCATIONS AND MOUNTING HEIGHTS SHALL BE VERIFIED WITH ARCHITECT PRIOR TO INSTALLATION.
3. REFER TO SHEET T0.01 FOR SYMBOLS, LEGEND, AND PROJECT GENERAL NOTES.
4. PROVIDE NECESSARY CONDUIT PENETRATIONS AND SLEEVES INTO TELECOM ROOM FOR ALL DATA, AUDIO/VIDEO AND SECURITY CABLING.
5. PROVIDE FIRESTOPPING AS REQUIRED PER APPLICABLE CODES.
6. SEE SHEET T0.06 FOR ACCESS CONTROL SECURITY SYSTEMS DOOR DETAILS.
7. SEE SHEET T0.06 FOR CCTV CAMERA MOUNTING DETAILS.
8. PROVIDE BUSHING ON ALL CONDUIT ENDS.
9. ALL CONDUITS AND INNERDUCTS SHALL HAVE PULL STRING INSTALED IN PATHWAYS WITH INSTALLED CABLING FOR FUTURE USE.
10. E.C. SHALL COORDINATE ALL OUTLET ROUGH -IN LOCATIONS AND HEIGHT WITH AUDIO/VIDEO VENDOR/CONTRACTOR PRIOR TO CONDUIT AND BOX INSTALLATION FOR DISPLAY AND ALL ASSOCIATED AV EQUIPMENT.

SHEET NOTES

T03 ARM/DISARM KEYPAD FOR SECURITY INTRUSION DETECTION SYSTEM. MOUNTED PER MANUFACTURER'S REQUIREMENTS.

T04 VIDEO INTERCOM DOOR STATION MOUNTED PER MANUFACTURER'S REQUIREMENTS.

T05 VIDEO INTERCOM MAIN CONTROL STATION. DESK MOUNTED.

T10 SEE EXTERIOR SPEAKER MOUNTING DETAIL ON SHEET T#.##.

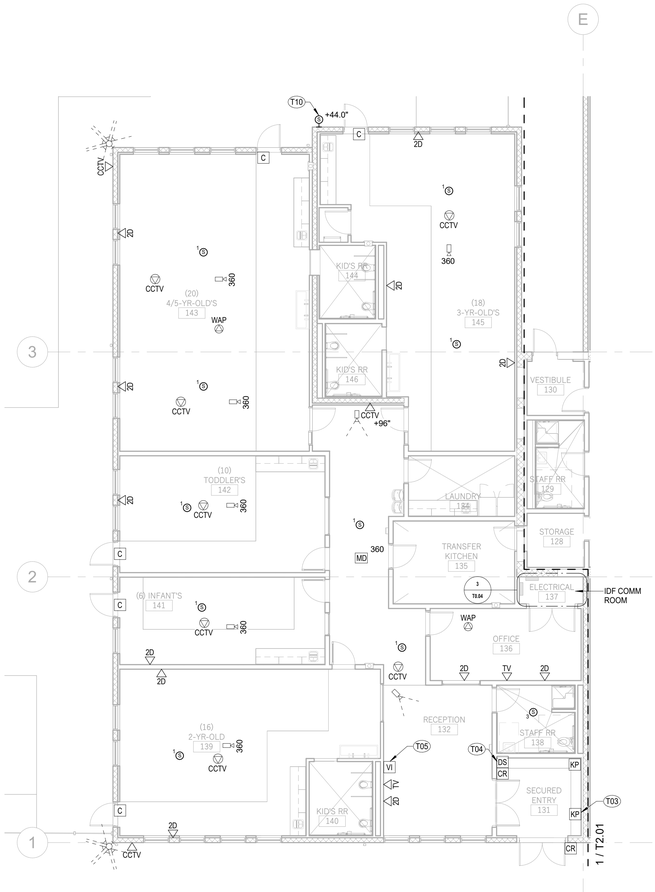

1 T2.01A TELECOM PLAN - ALT A

Scale: 1/8" = 1'-0"

tsk

225 South Arlington Avenue
Reno NV, 89501
phone: 775.857.2949
fax: 775.857.2403
www.tska.com

THESE DRAWINGS AND SPECIFICATIONS ARE THE PROPERTY OF TATE SNYDER KIMSEY ARCHITECTS AND MAY NOT BE REPRODUCED OR USED FOR ANY PURPOSE WITHOUT THE ARCHITECTS WRITTEN CONSENT.
AS INSTRUMENTS OF SERVICE, THESE DOCUMENTS ARE NOT FINAL AND READY FOR USE, AND THEREFORE NOT VALID, UNLESS THEY ARE SEALED, SIGNED AND DATED.

Copyright, Ltd 2023

Consultant

PK Electrical, Inc.
Engineering Design Consulting

681 Sierra Rose Drive, Suite B | Reno, NV 89511 | 775.826.9010
4601 DTC Boulevard, Suite 740 | Denver, CO 80237 | 720.481.3290
pkelectrical.com

PLEASE RECYCLE

Project

CITY OF FERNLEY CRRC

Job No: 21-058.00

Owner

CITY OF FERNLEY

50% CONSTRUCTION DOCUMENTS

REVISIONS		
REV	DATE	DESCRIPTION

Sheet Title

TELECOM PLAN - ALT A

Date: MARCH 21, 2023

Sheet No:

T2.01A

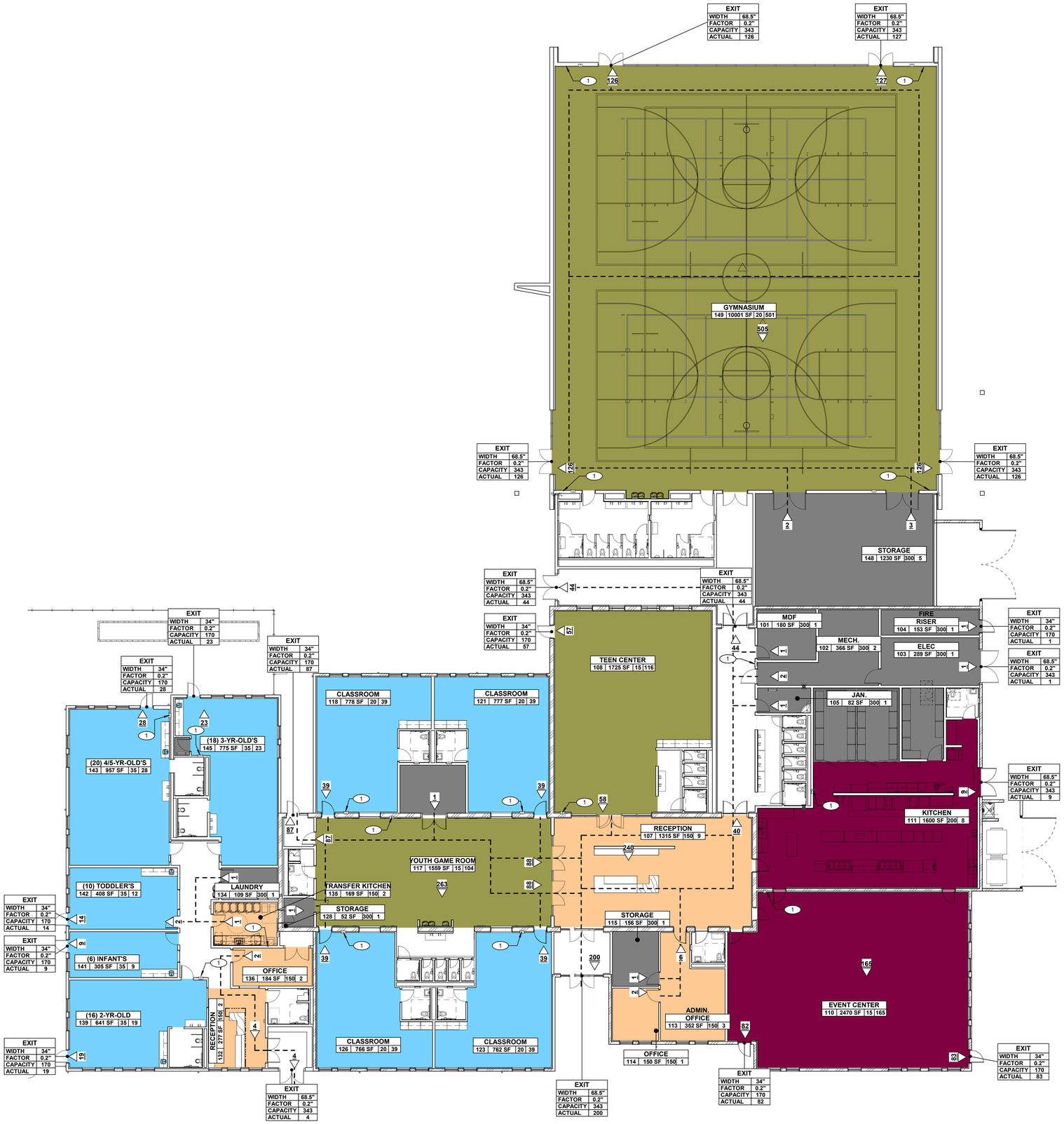

1 LIFE SAFETY PLAN - GYMNASIUM
SCALE: 3/32" = 1'-0"

NORTH

GENERAL NOTES

1 PER 2019 CBC SECTION 703.7: FIRE WALLS, FIRE BARRIERS, AND SMOKE PARTITIONS OR ANY OTHER WAL REQUIRED TO HAVE PROTECTED OPENINGS OR PENETRATIONS SHALL BE EFFECTIVELY AND PERMANENTLY IDENTIFIED WITH SIGNS OR STENCILING. SUCH IDENTIFICATION SHALL: (1) BE LOCATED WITHIN 15' OF THE END OF EACH WALL AND AT INTERVALS NOT EXCEEDING 30' MEASURED HORIZONTALLY ALONG THE WALL OR PARTITION; AND (3) INCLUDE LETTERING NOT LESS THAN 3" IN HEIGHT WITH A MINIMUM 3/8" STROKE IN A CONTRASTING COLOR INCORPORATING THE SUGGESTED WORKING: "FIRE AND/OR SMOKE BARRIER - PROTECT ALL OPENINGS" OR OTHER WORDING.

KEYNOTES

LEGEND

ROOM | 101 | 500 SF | 100 | 5 — ROOM NAME; OCCUPANT LOAD; OCCUPANT LOAD FACTOR; AREA; ROOM NUMBER
1 HR FIRE PARTITION
2 HR FIRE PARTITION
SMOKE RESISTIVE PARTITION
PATH OF EGRESS TO EXIT DISCHARGE
0 — EXIT DIRECTION AND NUMBER OF OCCUPANTS
MOST REMOTE POINT FOR TRAVEL DISTANCE
F.E.C. — FIRE EXTINGUISHER CABINET - FINAL LOCATION TO BE FINALIZED BY CONTRACTOR AND LOCAL FIRE DEPARTMENT
EXIT SIGN, SEE ELECTRICAL DRAWINGS

KEYPLAN

tsk
225 South Arlington Avenue
Reno NV, 89501
phone: 775.857.2949
fax: 775.857.2403
www.tska.com

THESE DRAWINGS AND SPECIFICATIONS ARE THE PROPERTY OF TATE SNYDER KIMSEY ARCHITECTS AND MAY NOT BE REPRODUCED OR USED FOR ANY PURPOSE WITHOUT THE ARCHITECTS WRITTEN CONSENT.
AS INSTRUMENTS OF SERVICE, THESE DOCUMENTS ARE NOT FINAL AND READY FOR USE, AND THEREFORE NOT VALID, UNLESS THEY ARE SEALED, SIGNED AND DATED.
Copyright, Ltd 2023

Consultant

PLEASE RECYCLE

Project
CITY OF FERNLEY CRRC

Job No: 21-058.00
Owner
CITY OF FERNLEY

50 % CONSTRUCTION DOCUMENTS

REVISIONS		
REV	DATE	DESCRIPTION

Sheet Title
LIFE SAFETY PLAN - ALT. B

Date: MARCH 21, 2023
Sheet No:
G1.02B

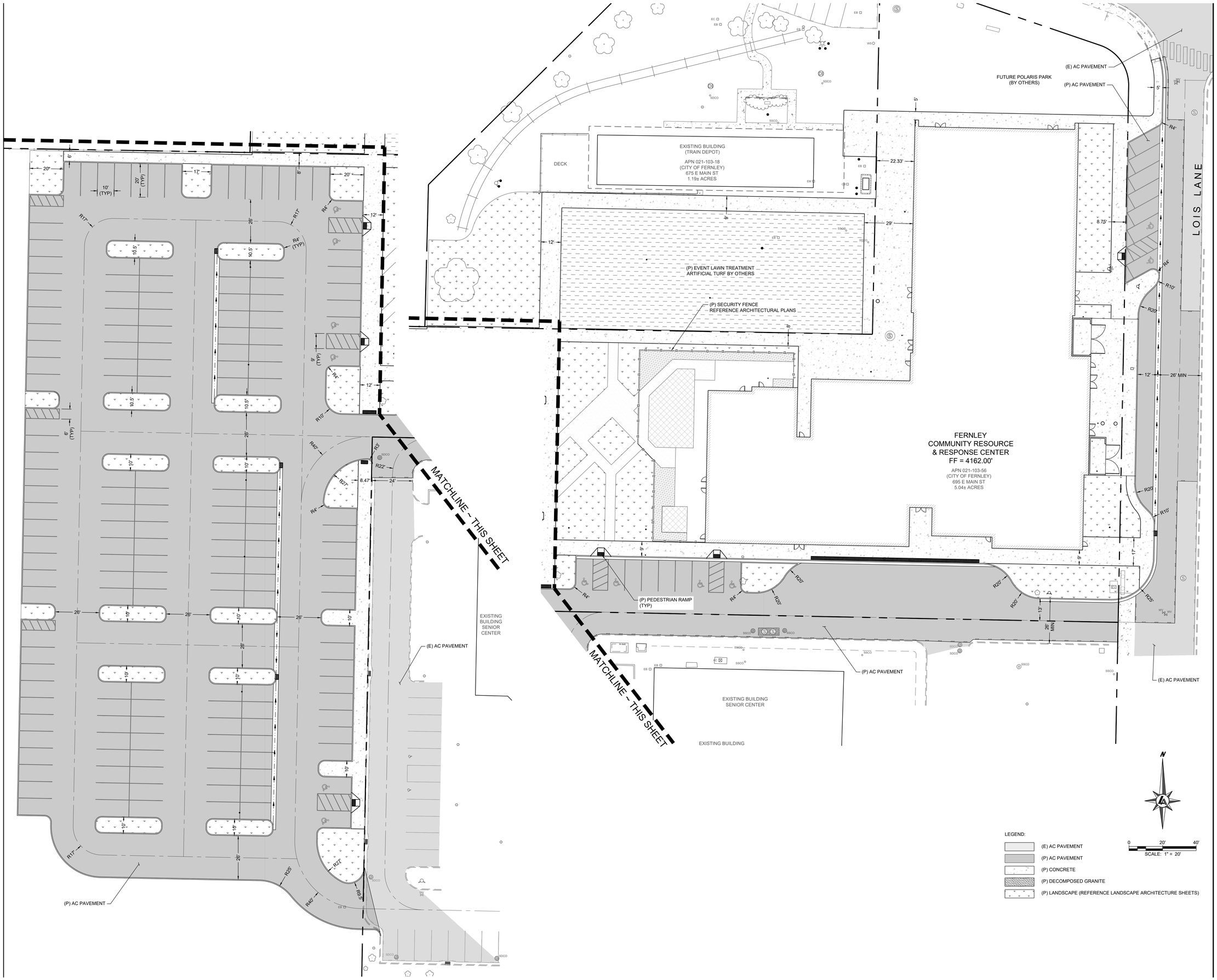

tsk
225 South Arlington Avenue
Reno NV, 89501
phone: 775.857.2949
fax: 775.857.2403
www.tska.com

THESE DRAWINGS AND SPECIFICATIONS ARE THE PROPERTY OF TATE SNYDER KIMSEY ARCHITECTS AND MAY NOT BE REPRODUCED OR USED FOR ANY PURPOSE WITHOUT THE ARCHITECTS WRITTEN CONSENT. AS INSTRUMENTS OF SERVICE, THESE DOCUMENTS ARE NOT FINAL AND READY FOR USE, AND THEREFORE NOT VALID, UNLESS THEY ARE SEALED, SIGNED AND DATED.

Copyright, Ltd 2023

Consultant

LUMOS & ASSOCIATES
9222 PROTOTYPE DRIVE
RENO, NV 89521
TEL: 775.827.6111
WWW.LUMOSINC.COM
INFO@LUMOSINC.COM

PLEASE RECYCLE

Project
CITY OF FERNLEY
CRRC

Job No: 21-058.00

Owner
CITY OF FERNLEY

50% CONSTRUCTION DOCUMENT

REVISIONS		
REV	DATE	DESCRIPTION

Sheet Title
SITE PLAN
ALTERNATE B

Date: MARCH 21, 2023
Sheet No:

C2.00B

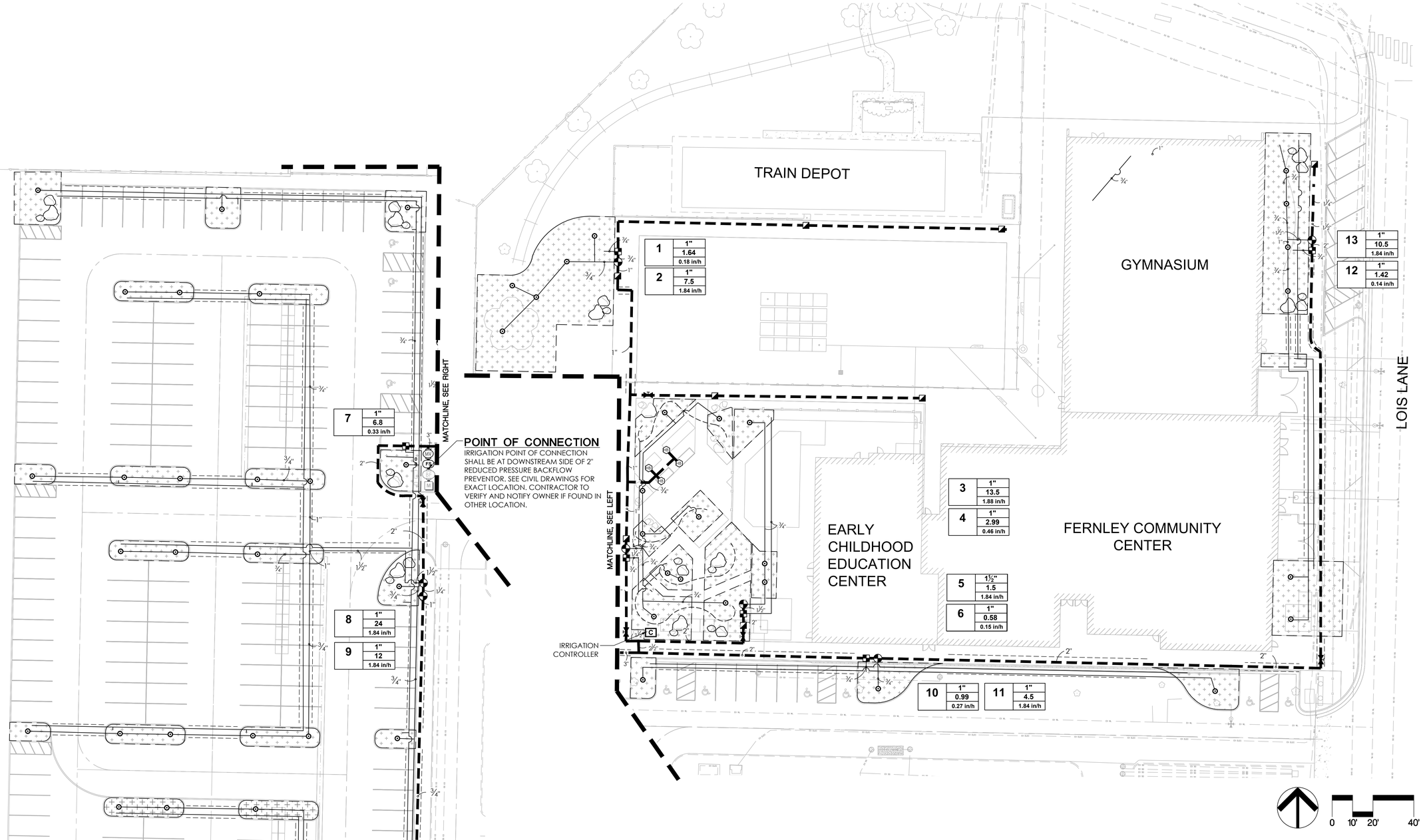

tsk
225 South Arlington Avenue
Reno NV, 89501
phone: 775.857.2949
fax: 775.857.2403
www.tska.com

THESE DRAWINGS AND SPECIFICATIONS ARE THE PROPERTY OF TATE SNYDER KIMSEY ARCHITECTS AND MAY NOT BE REPRODUCED OR USED FOR ANY PURPOSE WITHOUT THE ARCHITECTS WRITTEN CONSENT. AS INSTRUMENTS OF SERVICE, THESE DOCUMENTS ARE NOT FINAL AND READY FOR USE, AND THEREFORE NOT VALID, UNLESS THEY ARE SEALED, SIGNED AND DATED.
Copyright, Ltd 2023

Consultant

CALA
12150 Tributary Point Dr. Suite 140
Gold River , CA 95670
T 916.985.4366
www.callanderassociates.com

PLEASE RECYCLE

Project
CITY OF FERNLEY CRRC

Job No: 21-058.00

Owner
CITY OF FERNLEY

50% CONSTRUCTION DOCUMENT

REVISIONS		
REV	DATE	DESCRIPTION

Sheet Title
IRRIGATION PLAN ALTERNATE B

Date: MARCH 21, 2023
Sheet No:

L1.01B

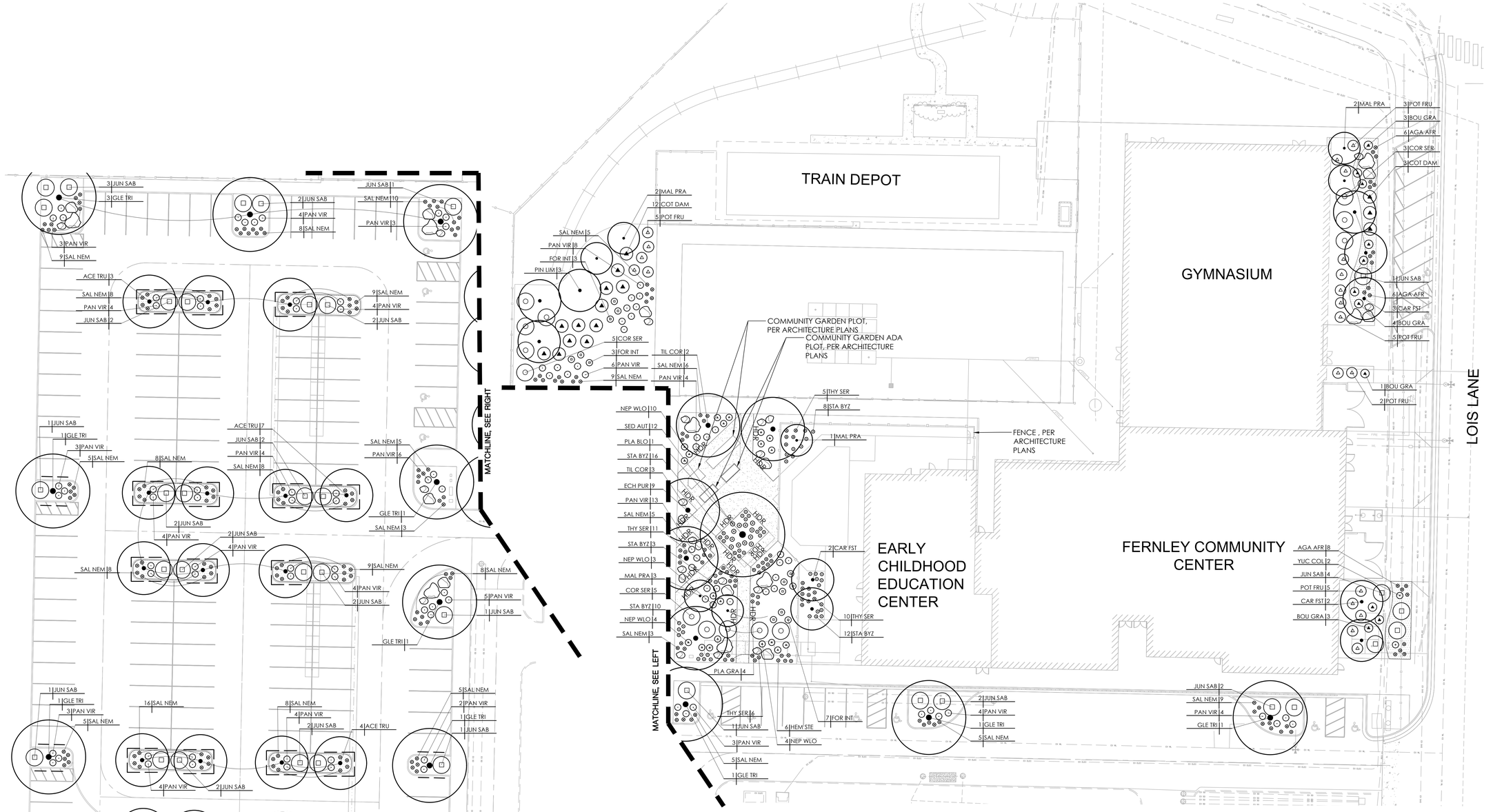

LANDSCAPE REQUIREMENTS - ALTERNATE B

	REQUIRED	PROVIDED
MINIMUM LANDSCAPE REQUIREMENT, 15% OF SITE	5 AC X 10% = 0.5 AC (21,780 SF)	0.8 AC (34,848 SF)
MINIMUM TREES IN REQUIRED LANDSCAPE AREA, 1 TREE EVERY 300 SF	21,780 SF / 300 SF = 73 TREES	58 TREES
MINIMUM NUMBER OF SHRUBS IN REQUIRED LANDSCAPE AREA, 1 SHRUB EVER 15 SF	21,780 SF / 15 SF = 1,452 SHRUBS	645 SHRUBS

PARKING LOT SHADE REQUIREMENTS - ALTERNATE B

	TOTAL # OF PARKING STALLS	REQUIRED	PROVIDED
1 SHADE TREE FOR EACH 10 SPACES FOR LOTS OVER 125	TOTAL # OF PARKING STALLS = 142 + 43 = 185	185 SPACES / 10 TREES = 18 TOTAL TREES	35 TREES

tsk
225 South Arlington Avenue
Reno NV, 89501
phone: 775.857.2949
fax: 775.857.2403
www.tska.com

THESE DRAWINGS AND SPECIFICATIONS ARE THE PROPERTY OF TATE SNYDER KIMSEY ARCHITECTS AND MAY NOT BE REPRODUCED OR USED FOR ANY PURPOSE WITHOUT THE ARCHITECTS WRITTEN CONSENT. AS INSTRUMENTS OF SERVICE, THESE DOCUMENTS ARE NOT FINAL AND READY FOR USE, AND THEREFORE NOT VALID, UNLESS THEY ARE SEALED, SIGNED AND DATED.
Copyright, Ltd 2023

Consultant

CALA
12150 Tributary Point Dr. Suite 140
Gold River , CA 95670
T 916.985.4366
www.callanderassociates.com

PLEASE RECYCLE

Project
CITY OF FERNLEY CRRC

Job No: 21-058.00

Owner
CITY OF FERNLEY

50% CONSTRUCTION DOCUMENT

REVISIONS		
REV	DATE	DESCRIPTION

Sheet Title
LANDSCAPE PLAN ALTERNATE B

Date: MARCH 21, 2023
Sheet No:
L2.01B

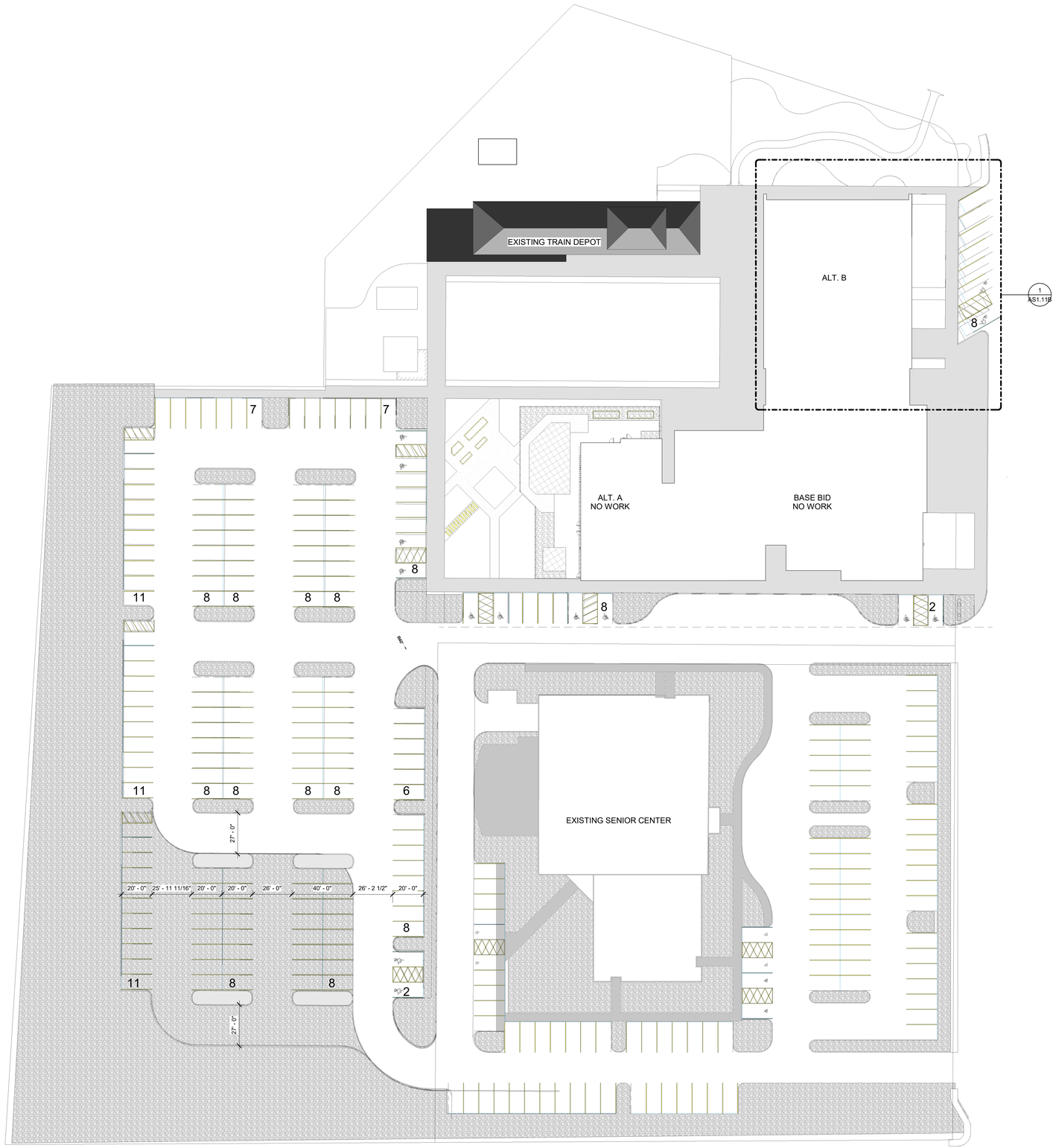

PARKING COUNTS:
ADA STALLS = 12
PARKING STALLS = 138
TOTAL PARKING = 160

1 OVERALL SITE PLAN ALT. B
SCALE: 1" = 30'-0"

NORTH 0' 30' 60' 120'

GENERAL NOTES

1. CONTRACTOR TO VERIFY DIMENSIONS IN FIELD PRIOR TO THE COMMENCEMENT OF ANY SITE WORK. DO NOT SCALE DRAWINGS.
2. REFER TO LANDSCAPE DRAWINGS FOR LANDSCAPE INFORMATION.
3. REFER TO CIVIL DRAWINGS FOR CURB DIMENSIONS.
4. REFER TO ARCHITECTURAL DRAWINGS FOR PARKING DIMENSIONS, AND STREET DIMENSIONS.
5. SEE ENLARGED SITE PLANS FOR ALL SITE PLAN KEYNOES.

KEYNOTES

LEGEND

tsk
225 South Arlington Avenue
Reno NV, 89501
phone: 775.857.2949
fax: 775.857.2403
www.tska.com

THESE DRAWINGS AND SPECIFICATIONS ARE THE PROPERTY OF TATE SNYDER KIMSEY ARCHITECTS AND MAY NOT BE REPRODUCED OR USED FOR ANY PURPOSE WITHOUT THE ARCHITECTS WRITTEN CONSENT. AS INSTRUMENTS OF SERVICE, THESE DOCUMENTS ARE NOT FINAL AND READY FOR USE, AND THEREFORE NOT VALID, UNLESS THEY ARE SEALED, SIGNED AND DATED.
Copyright, Ltd 2023

Consultant

PLEASE RECYCLE

Project
CITY OF FERNLEY CRRC

Job No: 21-058.00

Owner
CITY OF FERNLEY

50 % CONSTRUCTION DOCUMENTS

REVISIONS		
REV	DATE	DESCRIPTION

Sheet Title
SITE PLAN - ALT. B

Date: MARCH 21, 2023
Sheet No:
AS1.01B

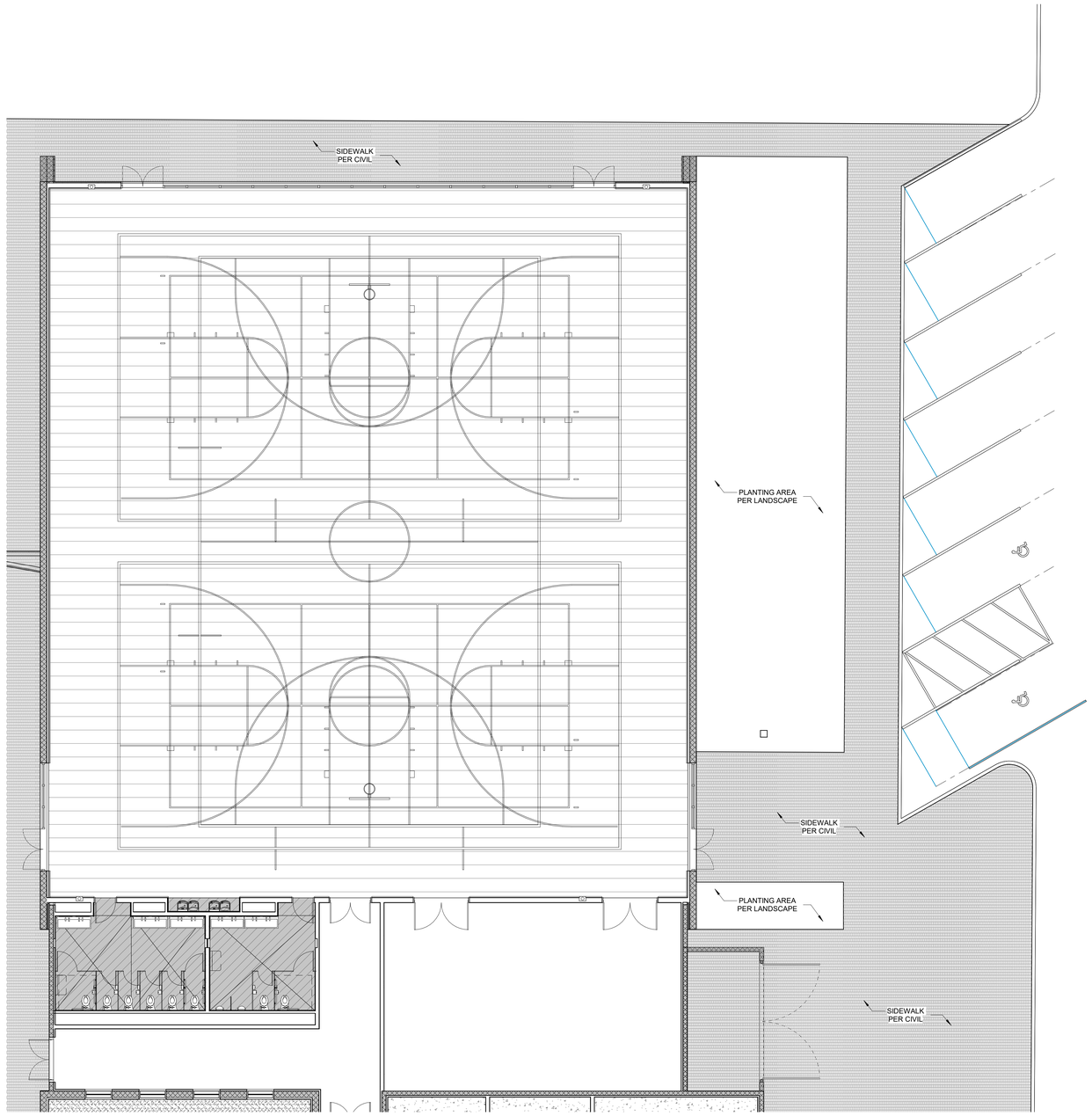

1 ENLARGED SITE PLAN ALT. B
SCALE: 1/8" = 1'-0"

NORTH 0' 30' 60' 120'

GENERAL NOTES

1. CONTRACTOR TO VERIFY DIMENSIONS IN FIELD PRIOR TO THE COMMENCEMENT OF ANY SITE WORK. DO NOT SCALE DRAWINGS.
2. REFER TO LANDSCAPE DRAWINGS FOR LANDSCAPE INFORMATION.
3. REFER TO CIVIL DRAWINGS FOR CURB DIMENSIONS.
4. REFER TO ARCHITECTURAL DRAWINGS FOR PARKING DIMENSIONS, AND STREET DIMENSIONS.
5. SEE ENLARGED SITE PLANS FOR ALL SITE PLAN KEYNOES.

KEYNOTES

LEGEND

tsk
225 South Arlington Avenue
Reno NV, 89501
phone: 775.857.2949
fax: 775.857.2403
www.tska.com

THESE DRAWINGS AND SPECIFICATIONS ARE THE PROPERTY OF TATE SNYDER KIMSEY ARCHITECTS AND MAY NOT BE REPRODUCED OR USED FOR ANY PURPOSE WITHOUT THE ARCHITECTS WRITTEN CONSENT.
AS INSTRUMENTS OF SERVICE, THESE DOCUMENTS ARE NOT FINAL AND READY FOR USE, AND THEREFORE NOT VALID, UNLESS THEY ARE SEALED, SIGNED AND DATED.
Copyright, Ltd 2023

Consultant

PLEASE RECYCLE

Project
CITY OF FERNLEY CRRC

Job No: 21-058.00

Owner
CITY OF FERNLEY

50 % CONSTRUCTION DOCUMENTS

REVISIONS		
REV	DATE	DESCRIPTION

Sheet Title
SITE PLAN - ALT. B

Date: MARCH 21, 2023
Sheet No:
AS1.11B

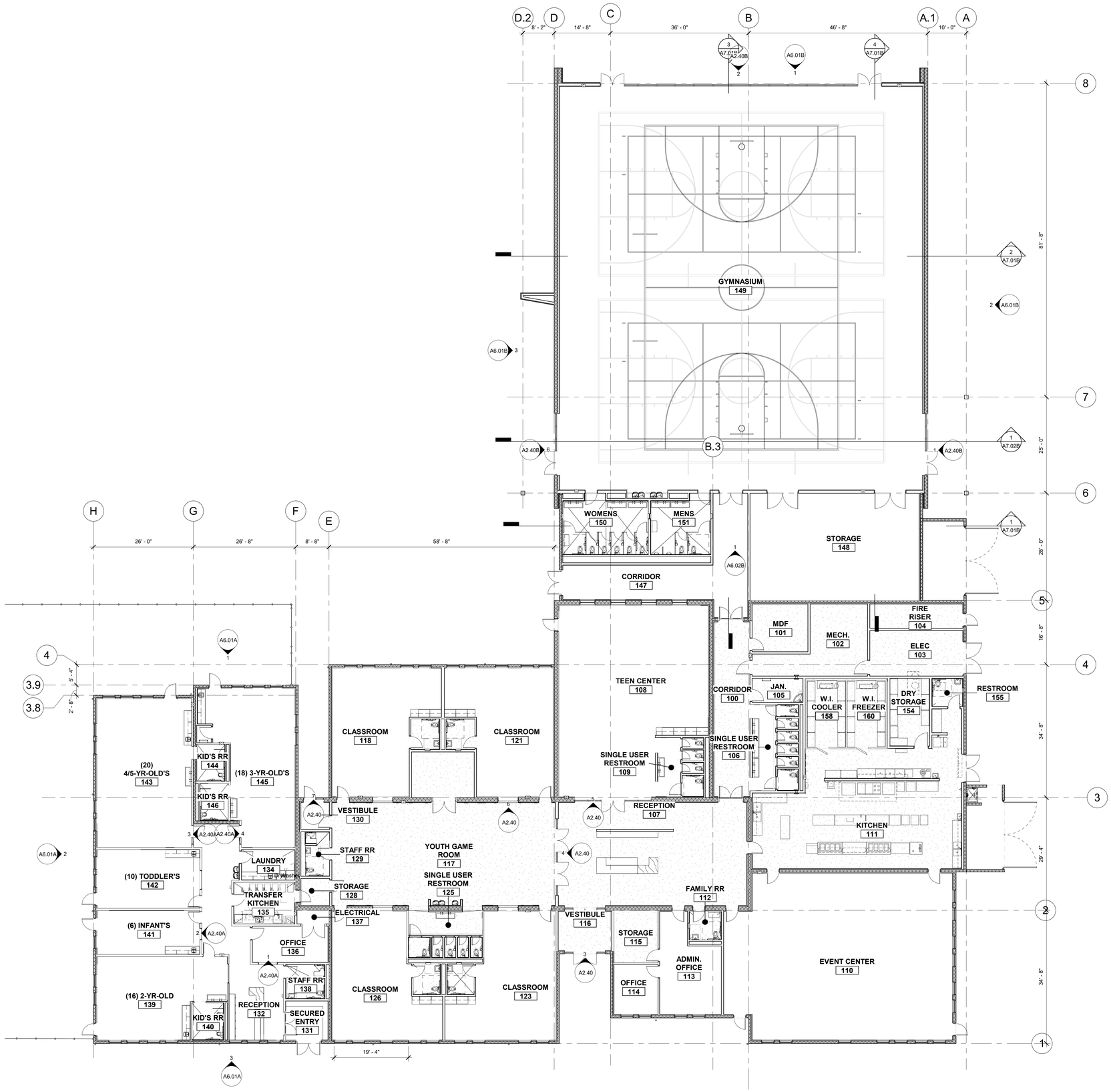

1 FLOOR PLAN - ALT. B
SCALE: 3/32" = 1'-0"

NORTH 0' 5' 11' 21'

GENERAL NOTES

1. ALL DIMENSION ARE TAKEN FROM FACE OF STUD, MASONRY, OR CONCRETE U.N.O.
2. SEE STRUCTURAL, MECHANICAL, PLUMBING, AND ELECTRICAL DRAWINGS FOR ADDITIONAL WORK NOT SHOWN ON THIS DRAWING.
3. SEE ELECTRICAL DRAWINGS FOR INFORMATION ON ELECTRICAL/TELECOM ROOMS.
4. ALL EQUIPMENT (O.F.O.I AND C.F.C.I.), SHALL COMPLY WITH ACCESSIBILITY REQUIREMENTS.

KEYNOTES

LEGEND

KEYPLAN

tsk
225 South Arlington Avenue
Reno NV, 89501
phone: 775.857.2949
fax: 775.857.2403
www.tska.com

THESE DRAWINGS AND SPECIFICATIONS ARE THE PROPERTY OF TATE SNYDER KIMSEY ARCHITECTS AND MAY NOT BE REPRODUCED OR USED FOR ANY PURPOSE WITHOUT THE ARCHITECTS WRITTEN CONSENT. AS INSTRUMENTS OF SERVICE, THESE DOCUMENTS ARE NOT FINAL AND READY FOR USE, AND THEREFORE NOT VALID, UNLESS THEY ARE SEALED, SIGNED AND DATED.

Copyright, Ltd 2023

Consultant

PLEASE RECYCLE

Project
CITY OF FERNLEY CRRC

Job No: 21-058.00

Owner
CITY OF FERNLEY

50 % CONSTRUCTION DOCUMENTS

REVISIONS		
REV	DATE	DESCRIPTION

Sheet Title
OVERALL FLOOR PLAN - ALT. B

Date: MARCH 21, 2023

Sheet No:
A1.01B

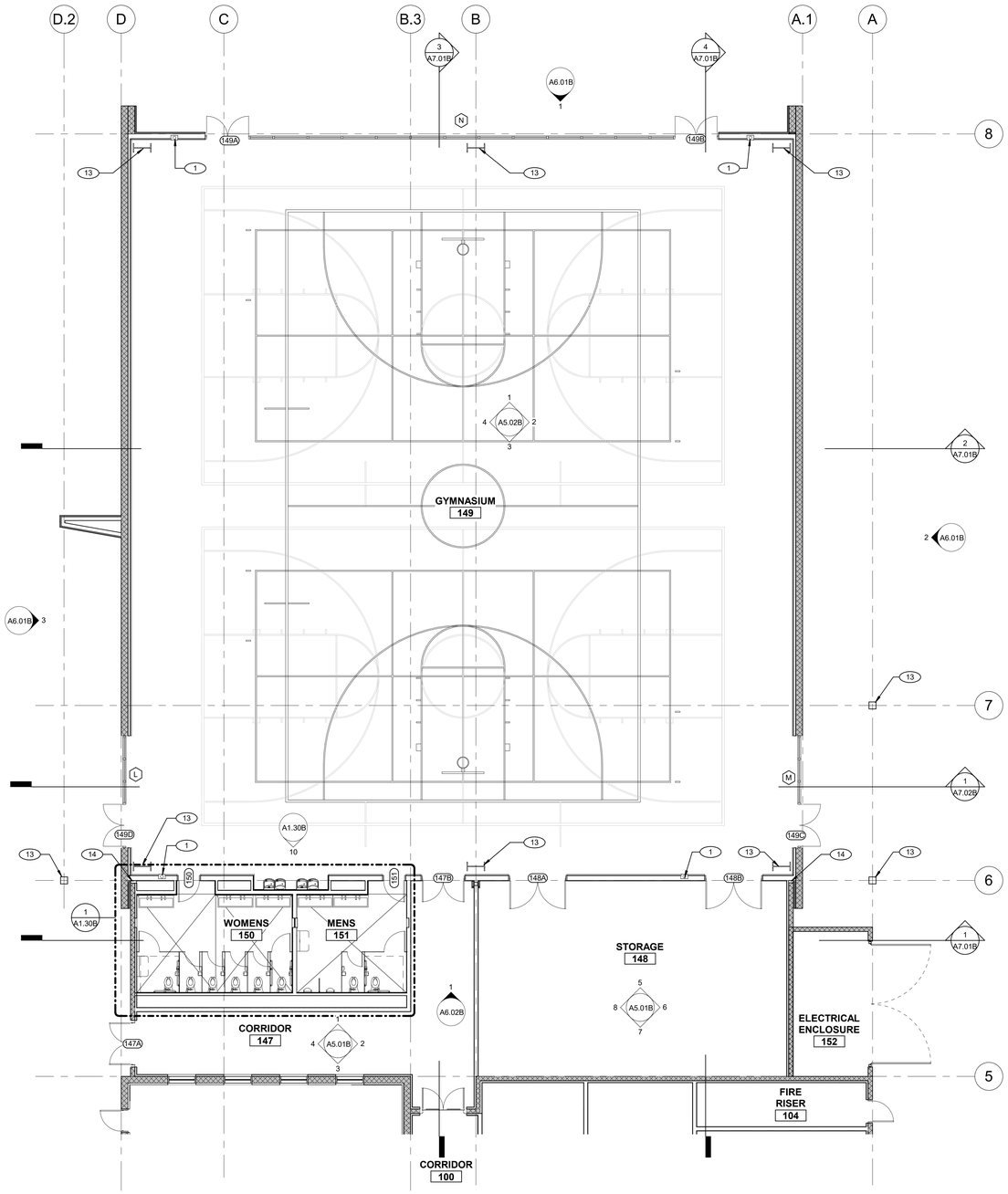

1 ENLARGED FLOOR PLAN - ALT. B
SCALE: 1/8" = 1'-0"

NORTH

GENERAL NOTES

1. ALL DIMENSION ARE TAKEN FROM FACE OF STUD, MASONRY, OR CONCRETE U.N.O.
2. SEE STRUCTURAL, MECHANICAL, PLUMBING, AND ELECTRICAL DRAWINGS FOR ADDITIONAL WORK NOT SHOWN ON THIS DRAWING.
3. SEE ELECTRICAL DRAWINGS FOR INFORMATION ON ELECTRICAL/TELECOM ROOMS.
4. ALL EQUIPMENT (O.F.O.I AND C.F.C.I.), SHALL COMPLY WITH ACCESSIBLITY REQUIREMENTS.

KEYNOTES

1. FIRE EXTINGUISHER
2. ROOF ACCESS LADDER, SEE ROOF DETAILS
3. ADA DRINKING FOUNTAIN AND WATER BOTTLE FILLER.
4. CASEWORK AND COUNTERTOP, SEE CASEWORK DETAILS.
5. TWO STATION LAVATORY
6. CAR SEAT STORAGE RACK.
7. WALKING IN COOLER/FREEZER, SEE KITCHEN DWGS.
8. KITCHEN EQUIPMENT & LAYOUT, SEE KITCHEN DWGS.
9. TRASH CAN WASH STATION, SEE KITCHEN DWGS.
10. BIRCH PLYWOOD CUT OUTS TO BE APPLIED ON THE WALL. SEE ELEVATION FOR MORE INFORMATION.
11. TRASH BIN BY OWNER.
12. CORNER MOP SINK, SEE KITCHEN DWGS.
13. PAINTED STEEL COLUMN, SEE STRUCTURAL DWGS.
14. EXPANSION JOINT, SEE DETAIL XX/AX.XX

tsk
225 South Arlington Avenue
Reno NV, 89501
phone: 775.857.2949
fax: 775.857.2403
www.tska.com

THESE DRAWINGS AND SPECIFICATIONS ARE THE PROPERTY OF TATE SNYDER KIMSEY ARCHITECTS AND MAY NOT BE REPRODUCED OR USED FOR ANY PURPOSE WITHOUT THE ARCHITECTS WRITTEN CONSENT.
AS INSTRUMENTS OF SERVICE, THESE DOCUMENTS ARE NOT FINAL AND READY FOR USE, AND THEREFORE NOT VALID, UNLESS THEY ARE SEALED, SIGNED AND DATED.
Copyright, Ltd 2023

Consultant

PLEASE RECYCLE

Project
CITY OF FERNLEY CRRC

Job No: 21-058.00

Owner
CITY OF FERNLEY

50 % CONSTRUCTION DOCUMENTS

REVISIONS		
REV	DATE	DESCRIPTION

Sheet Title
ENLARGED FLOOR PLAN - ALT. B

Date: MARCH 21, 2023
Sheet No:
A1.11B

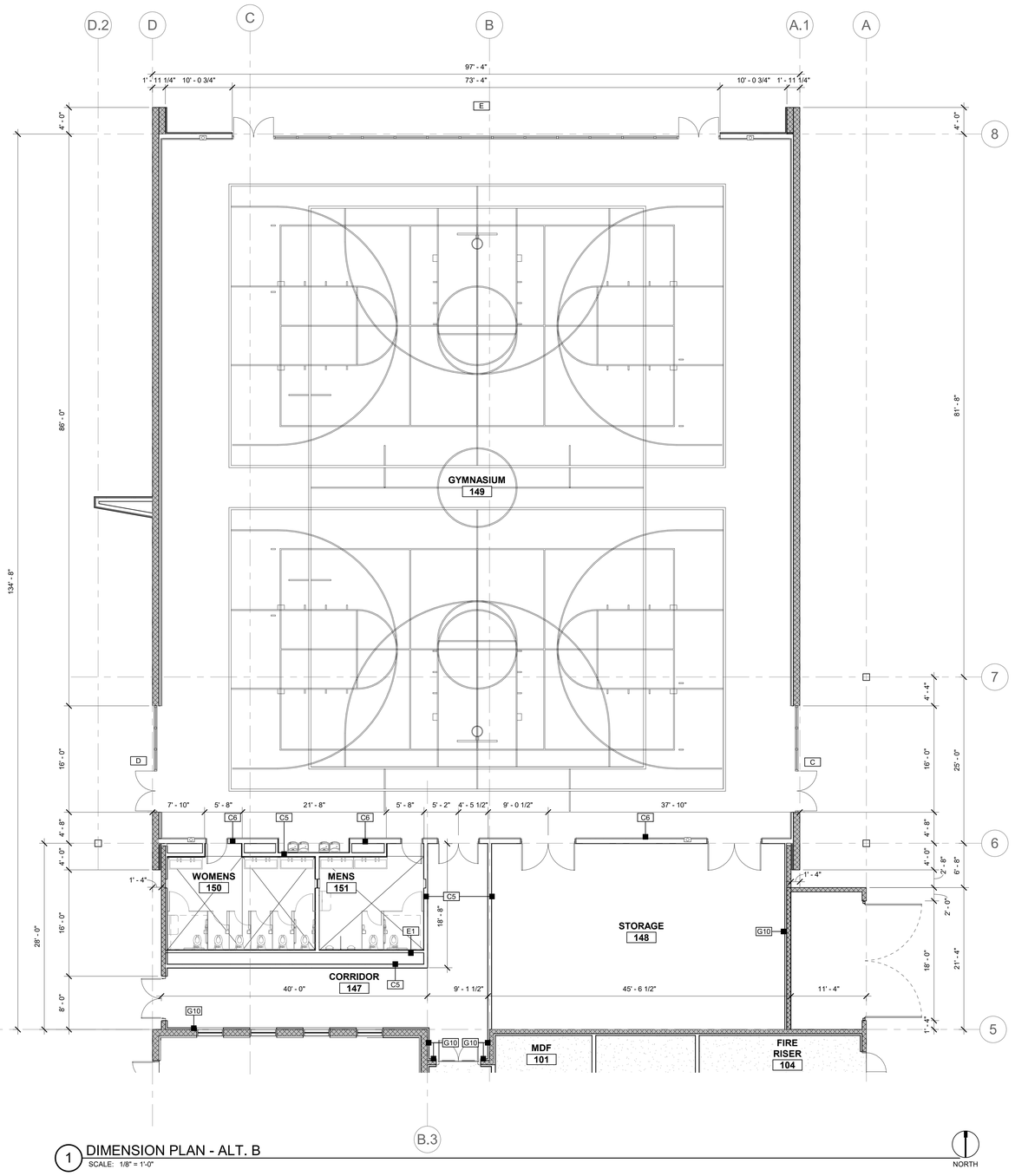

1 DIMENSION PLAN - ALT. B
SCALE: 1/8" = 1'-0"

NORTH

GENERAL NOTES

1. ALL DIMENSION ARE TAKEN FROM FACE OF STUD, MASONRY, OR CONCRETE U.N.O.
2. SEE OVERALL FLOOR PLANS FOR EQUIPMENT SCHEDULE, MARKERBOARD AND TACKBOARD SCHEDULE, AND KEYNOTE ITEMS NOT LABELED IN DIMENSION PLANS.

KEYNOTES

LEGEND

KEYPLAN

tsk
225 South Arlington Avenue
Reno NV, 89501
phone: 775.857.2949
fax: 775.857.2403
www.tska.com

THESE DRAWINGS AND SPECIFICATIONS ARE THE PROPERTY OF TATE SNYDER KIMSEY ARCHITECTS AND MAY NOT BE REPRODUCED OR USED FOR ANY PURPOSE WITHOUT THE ARCHITECTS WRITTEN CONSENT.
AS INSTRUMENTS OF SERVICE, THESE DOCUMENTS ARE NOT FINAL AND READY FOR USE, AND THEREFORE NOT VALID, UNLESS THEY ARE SEALED, SIGNED AND DATED.
Copyright, Ltd 2023

Consultant

PLEASE RECYCLE

Project
CITY OF FERNLEY CRRC

Job No: 21-058.00

Owner
CITY OF FERNLEY

50 % CONSTRUCTION DOCUMENTS

REVISIONS		
REV	DATE	DESCRIPTION

Sheet Title
DIMENSION & PARTITION PLAN - ALT. B

Date: MARCH 21, 2023
Sheet No:
A1.21B

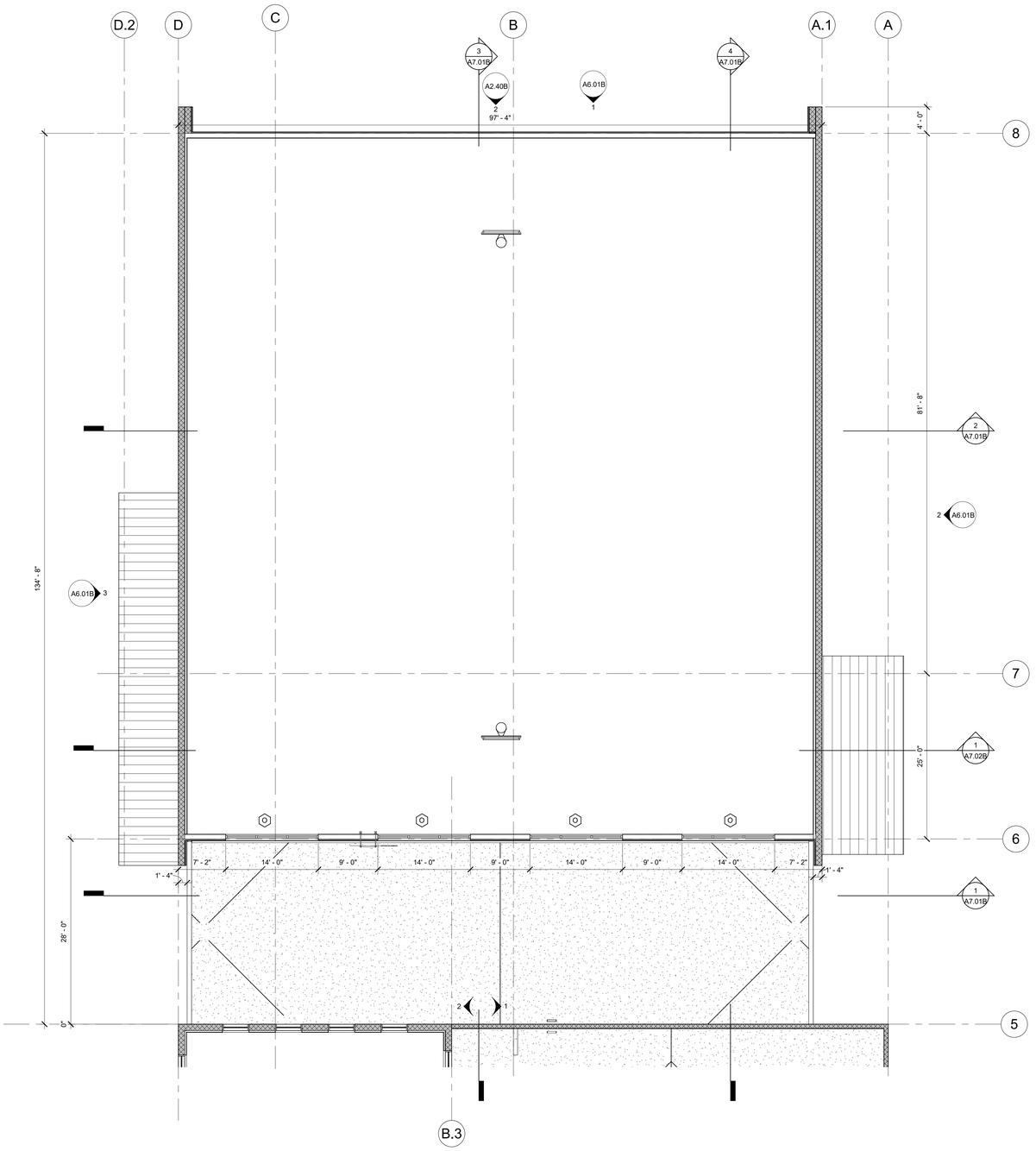

1 DIMENSION PLAN - ALT. B HIGH WALL
SCALE: 1/8" = 1'-0"

NORTH

GENERAL NOTES

1. ALL DIMENSION ARE TAKEN FROM FACE OF STUD, MASONRY, OR CONCRETE U.N.O.
2. SEE STRUCTURAL, MECHANICAL, PLUMBING, AND ELECTRICAL DRAWINGS FOR ADDITIONAL WORK NOT SHOWN ON THIS DRAWING.
3. SEE ELECTRICAL DRAWINGS FOR INFORMATION ON ELECTRICAL/TELECOM ROOMS.
4. ALL EQUIPMENT (O.F.O.I AND C.F.C.I.), SHALL COMPLY WITH ACCESSIBLITY REQUIREMENTS.

KEYNOTES

1. FIRE EXTINGUISHER
2. ROOF ACCESS LADDER, SEE ROOF DETAILS
3. ADA DRINKING FOUNTAIN AND WATER BOTTLE FILLER.
4. CASEWORK AND COUNTERTOP, SEE CASEWORK DETAILS.
5. TWO STATION LAVATORY
6. CAR SEAT STORAGE RACK.
7. WALKING IN COOLER/FREEZER, SEE KITCHEN DWGS.
8. KITCHEN EQUIPMENT & LAYOUT, SEE KITCHEN DWGS.
9. TRASH CAN WASH STATION, SEE KITCHEN DWGS.
10. BIRCH PLYWOOD CUT OUTS TO BE APPLIED ON THE WALL. SEE ELEVATION FOR MORE INFORMATION.
11. TRASH BIN BY OWNER.
12. CORNER MOP SINK, SEE KITCHEN DWGS.
13. PAINTED STEEL COLUMN. SEE STRUCTURAL DWGS.
14. EXPANSION JOINT, SEE DETAIL XX/AX.XX

tsk
225 South Arlington Avenue
Reno NV, 89501
phone: 775.857.2949
fax: 775.857.2403
www.tska.com

THESE DRAWINGS AND SPECIFICATIONS ARE THE PROPERTY OF TATE SNYDER KIMSEY ARCHITECTS AND MAY NOT BE REPRODUCED OR USED FOR ANY PURPOSE WITHOUT THE ARCHITECTS WRITTEN CONSENT.
AS INSTRUMENTS OF SERVICE, THESE DOCUMENTS ARE NOT FINAL AND READY FOR USE, AND THEREFORE NOT VALID, UNLESS THEY ARE SEALED, SIGNED AND DATED.
Copyright, Ltd 2023

Consultant

PLEASE RECYCLE

Project
CITY OF FERNLEY CRRC

Job No: 21-058.00

Owner
CITY OF FERNLEY

50 % CONSTRUCTION DOCUMENTS

REVISIONS		
REV	DATE	DESCRIPTION

Sheet Title
DIMENSION HIGH WALL - ALT. B

Date: MARCH 21, 2023
Sheet No:
A1.22B

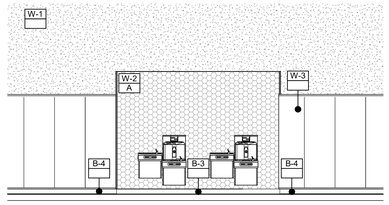

10 GYM 149 WATER FOUNTAINS
SCALE: 1/4" = 1'-0"

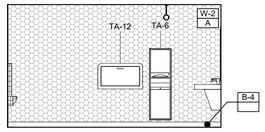

9 MENS 151 WEST
SCALE: 1/4" = 1'-0"

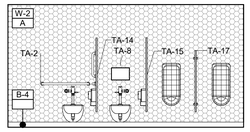

8 MENS 151 SOUTH
SCALE: 1/4" = 1'-0"

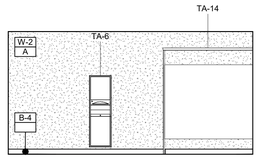

7 MENS 151 EAST
SCALE: 1/4" = 1'-0"

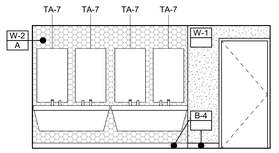

6 MENS 151 NORTH
SCALE: 1/4" = 1'-0"

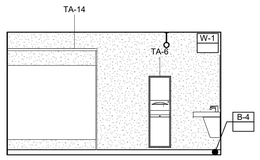

5 WOMENS 150 WEST
SCALE: 1/4" = 1'-0"

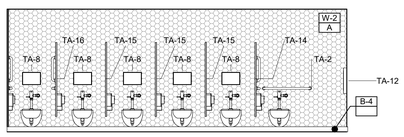

4 WOMENS 150 SOUTH
SCALE: 1/4" = 1'-0"

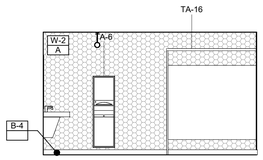

3 WOMENS 150 EAST
SCALE: 1/4" = 1'-0"

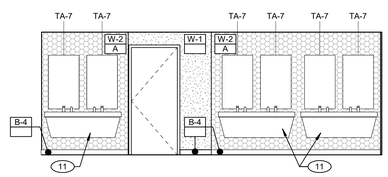

2 WOMENS 150 NORTH
SCALE: 1/4" = 1'-0"

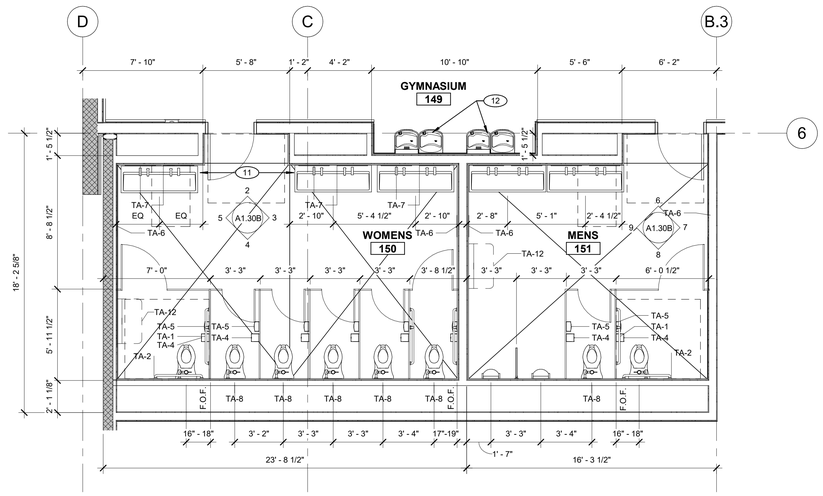

1 ENLARGED FLOOR PLAN - MEN & WOMENS RR - ALT. B
SCALE: 1/4" = 1'-0"

SPECIALTY EQUIPMENT SCHEDULE - ALT B

SYMBOL	DESCRIPTION	MANUFACTURER	Model	ADULT MOUNTING HEIGHT	CHILDREN MOUNTING HEIGHT	KINDER MOUNTING HEIGHT
TA-1	42" 1-1/2" DIA. S.S. GRAB BAR W/ CONCEALED MOUNTING	BOBRICK	B-6806.99 X 42"	2'-11" A.F.F. (U.N.O.)	2'-0" A.F.F. (U.N.O)	
TA-2	36" 1-1/2" DIA. S.S. GRAB BAR W/ CONCEALED MOUNTING	BOBRICK	B-6806.99 X 36"	2'-11" A.F.F. (U.N.O.)		
TA-3	18" x 1-1/2" DIA. S.S. GRAB BAR W/ CONCEALED MOUNTING	BOBRICK	B-6806.99 X 18"	3'-0" A.F.F. (U.N.O.)	2'-0" A.F.F. (U.N.O)	1'-8" A.F.F.
TA-4	TOILET PAPER DISPENSER	CONTINENTAL	401 SD	1'-7" A.F.F. (U.N.O.)	1'-4" A.F.F. (U.N.O.)	1'-2" A.F.F.
TA-5	BOBRICK B-270 CONTURA SERIES SURFACE MOUNTED SANITARY NAPKIN DISPOSAL	BOBRICK	B-270	1'-7" A.F.F. (U.N.O.)	1'-4" A.F.F. (U.N.O.)	1'-2" A.F.F.
TA-6	CLASSICSERIES® RECESSED CONVERTIBLE PAPER TOWEL DISPENSER AND WASTE RECEPTACLE	BOBRICK	B-3940	3'-10" A.F.F. (U.N.O.)	3'-0" A.F.F. (U.N.O.)	3'-0" A.F.F. (U.N.O.)
TA-7	MIRROR WELDED-FRAME MIRROR	BOBRICK	B-290 2436	6'-2" A.F.F.		
TA-8	SURFACE-MOUNTED TOILET SEAT-COVER DISPENSER	BOBRICK	B-4221	<varies>		<varies>
TA-9	BOBRICK B-6861.99 TWO-WALL SHOWER STALL PEENED GRAB BAR	BOBRICK	B-6861.99			
TA-10	ADA SHOWER SEAT	SEE SPECS	BASED ON ASI 8205	1'-7" A.F.F. (U.N.O.)		
TA-12	BABY CHANGING STATION	KOALA KARE	KB200-01	2'-6" A.F.F. (U.N.O.)		
TA-14	TOILET STALL 60"X60"	BOBRICK				
TA-15	TOILET STALL 32"X60"	BOBRICK				
TA-16	TOILET STALL 38"X60"	BOBRICK				
TA-17	RESTROOM PARTITIONS - URINAL SCREEN 23"X48"	BRADLEY CORPORATION	Baked Enamel - Urinal Screen			

GENERAL NOTES

1. ALL DIMENSIONS ARE TAKEN FROM FACE OF STUD, MASONRY, OR CONCRETE U.N.O.
2. SEE EQUIPMENT SCHEDULE AND SPECIFICATIONS FOR ADDITIONAL INFORMATION. NOT SHOWN ON DRAWINGS.
3. ALL EQUIPMENT (O.F.O.I AND C.F.C.I.), SHALL COMPLY WITH ACCESSIBILITY REQUIREMENTS.

KEYNOTES

1. RUBBER BASE, SEE FINISH SCHEDULE.
2. ROOF ACCESS LADDER, SEE ROOF DETAILS
3. FOR WALL FINISHES SEE FINISH SCHEDULE.
4. FLOOR TRENCH DRAIN, SEE PLUMBING DWGS.
5. PAINTED STRUCTURAL FRAMING, SEE STRUCTURAL DWGS.
6. PAINTED DOOR AND FRAME, SEE FINISH SCHEDULE.
7. CORNER MOP SINK, SEE KITCHEN DWGS.
9. FOR WALL BASE, SEE ROOM FINISH SCHEDULE.
10. WALL MOUNTED FAUCET, SEE PLUMBING DWGS.
11. TWO STATION LAVATORY
12. ADA DRINKING FOUNTAIN AND WATER BOTTLE FILLER.

LEGEND

tsk
225 South Arlington Avenue
Reno NV, 89501
phone: 775.857.2949
fax: 775.857.2403
www.tska.com

THESE DRAWINGS AND SPECIFICATIONS ARE THE PROPERTY OF TATE SNYDER KIMSEY ARCHITECTS AND MAY NOT BE REPRODUCED OR USED FOR ANY PURPOSE WITHOUT THE ARCHITECTS WRITTEN CONSENT. AS INSTRUMENTS OF SERVICE, THESE DOCUMENTS ARE NOT FINAL AND READY FOR USE, AND THEREFORE NOT VALID, UNLESS THEY ARE SEALED, SIGNED AND DATED.
Copyright, Ltd 2023

Consultant

PLEASE RECYCLE

Project
CITY OF FERNLEY CRRC

Job No: 21-058.00
Owner
CITY OF FERNLEY

50 % CONSTRUCTION DOCUMENTS

REVISIONS		
REV	DATE	DESCRIPTION

Sheet Title
ENLARGED RESTROOM PLANS & INTERIOR ELEVATIONS - ALT. B

Date: MARCH 21, 2023
Sheet No:
A1.30B

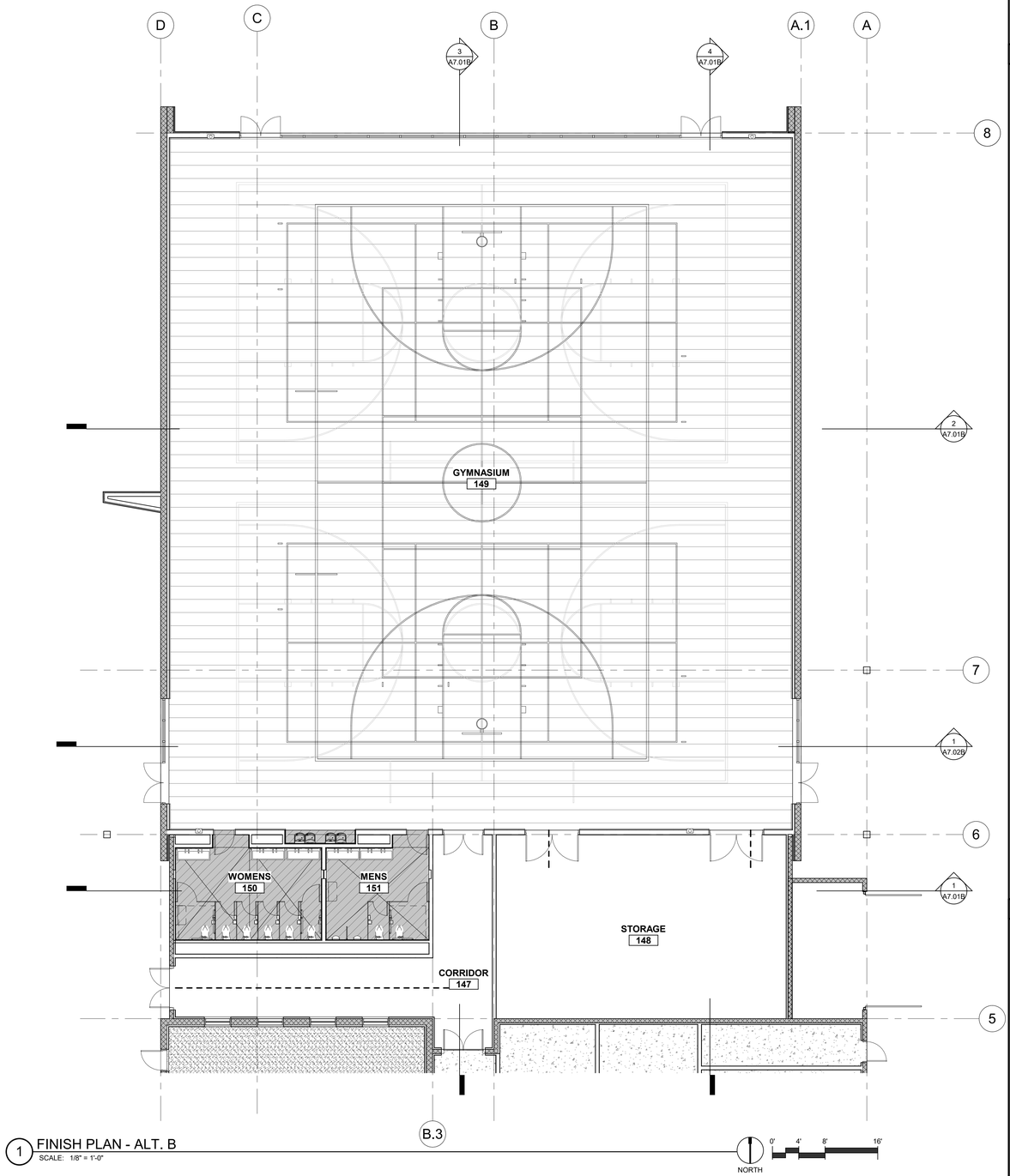

1 FINISH PLAN - ALT. B
SCALE: 1/8" = 1'-0"

NORTH 0' 4' 8' 16'

GENERAL NOTES

KEYNOTES

LEGEND

- CARPET TILE (F-1)
- RUBBER FLOORING (F-2)
- RESINOUS FLOORING (F-3)
- EPOXY FLOORING (F-4)
- LVT (F-5)
- SEALED CONCRETE (F-6)
- GYM FLOORING (F-7)

tsk
225 South Arlington Avenue
Reno NV, 89501
phone: 775.857.2949
fax: 775.857.2403
www.tska.com

THESE DRAWINGS AND SPECIFICATIONS ARE THE PROPERTY OF TATE SNYDER KIMSEY ARCHITECTS AND MAY NOT BE REPRODUCED OR USED FOR ANY PURPOSE WITHOUT THE ARCHITECTS WRITTEN CONSENT. AS INSTRUMENTS OF SERVICE, THESE DOCUMENTS ARE NOT FINAL AND READY FOR USE, AND THEREFORE NOT VALID, UNLESS THEY ARE SEALED, SIGNED AND DATED.

Copyright, Ltd 2023

Consultant

PLEASE RECYCLE

Project
CITY OF FERNLEY CRRC

Job No: 21-058.00

Owner
CITY OF FERNLEY

50 % CONSTRUCTION DOCUMENTS

REVISIONS		
REV	DATE	DESCRIPTION

Sheet Title
FINISH PLAN - ALT. B

Date: MARCH 21, 2023
Sheet No:
A1.41B

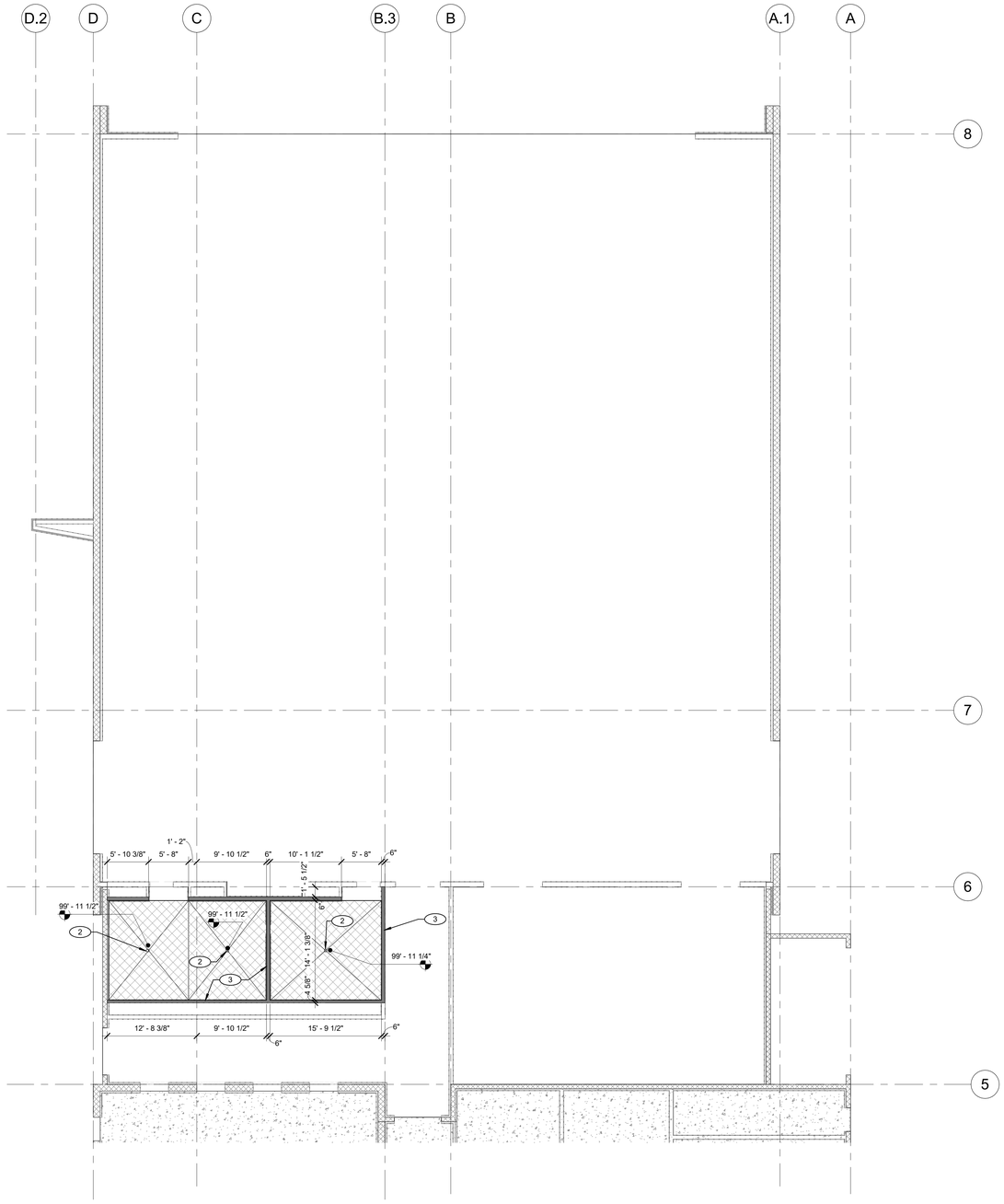

1 SLAB PLAN - ALT. B
SCALE: 1/8" = 1'-0"

NORTH

GENERAL NOTES

1. ALL DIMENSION ARE TAKEN FROM FACE OF STUD, MASONRY, OR CONCRETE U.N.O.
2. SEE STRUCTURAL, MECHANICAL, PLUMBING, AND ELECTRICAL DRAWINGS FOR ADDITIONAL WORK NOT SHOWN ON THIS DRAWING.
3. SEE ELECTRICAL DRAWINGS FOR INFORMATION ON ELECTRICAL/TELECOM ROOMS.
4. ALL EQUIPMENT (O.F.O.I AND C.F.C.I.), SHALL COMPLY WITH ACCESSIBLITY REQUIREMENTS.

KEYNOTES

1. DEEP FLOOR DRAIN, SEE FOOD SERVICE & PLUMBING DWGS.
2. FLOOR DRAIN, SLOPE PER CODE, SEE PLUMBING DWGS.
3. 4" HIGH CONCRETE CURB, SEE STRUCT. DWGS.
4. FLOOR TRENCH DRAIN, SLOPE PER CODE, SEE PLUMBING DWGS.
5. SHOWER DRAIN, SLOPE PER CODE, SEE PLUMBING DWGS.

LEGEND

- DEPRESSED SLAB - REFER TO PLAN FOR DEPTH
- SLOPED SLAB - REFER TO PLAN FOR SLOPE AND ELEVATIONS
- UNDERSIDE OF SLAB EXPOSED TO EXTERIOR
- FD — FLOOR DRAIN, PROVIDE SLOPES TO DRAIN (1/8" PER 1'-0") - REFER TO PLUMBING DRAWINGS
- CONCRETE CURB - REFER TO PLAN FOR THICKNESS, HEIGHT, AND EXTENTS
- FB — FLOOR BOX - REFER TO ELECTRICAL & LOW VOLTAGE DRAWINGS

LEGEND - SLAB PLANS
SCALE: 3/32" = 1'-0"

tsk
225 South Arlington Avenue
Reno NV, 89501
phone: 775.857.2949
fax: 775.857.2403
www.tska.com

THESE DRAWINGS AND SPECIFICATIONS ARE THE PROPERTY OF TATE SNYDER KIMSEY ARCHITECTS AND MAY NOT BE REPRODUCED OR USED FOR ANY PURPOSE WITHOUT THE ARCHITECTS WRITTEN CONSENT.
AS INSTRUMENTS OF SERVICE, THESE DOCUMENTS ARE NOT FINAL AND READY FOR USE, AND THEREFORE NOT VALID, UNLESS THEY ARE SEALED, SIGNED AND DATED.
Copyright, Ltd 2023

Consultant

PLEASE RECYCLE

Project
CITY OF FERNLEY CRRC

Job No: 21-058.00

Owner
CITY OF FERNLEY

50 % CONSTRUCTION DOCUMENTS

REVISIONS		
REV	DATE	DESCRIPTION

Sheet Title
ENLARGED SLAB PLAN - ALT. B

Date: MARCH 21, 2023
Sheet No:
A1.51B

ROOM FINISH SCHEDULE

ROOM NO	ROOM NAME	FLOORING MAT'L	FLOORING BASE	CEILING MAT'L	WALL NORTH MAT'L	WALL WEST MAT'L	WALL SOUTH MAT'L	WALL EAST MAT'L	COMMENTS
LEVEL 1									
147	CORRIDOR	F-6	B-2	C-1	W-1	W-1	W-1	W-1	ALT. B
148	STORAGE	F-6	B-2	C-4	W-1	W-1	W-1	W-1	ALT. B
149	GYMNASIUM	F-7	B-1	C-4	W-1/W-3/W-7	W-1/W-3/W-7	W-1/W-3	W-1/W-3/W-7	ALT. B
150	WOMENS	F-3	B-3	C-3	W-1/W-2A	W-1	W-2A	W-2A	ALT. B
151	MENS	F-3	B-3	C-3	W-1/W-2A	W-2A	W-2A	W-1	ALT. B

MATERIAL SCHEDULE

KEY	DESCRIPTION	MANUFACTURER (BASIS OF DESIGN)	MODEL NUMBER	COLOR	REMARKS
FLOORING					SEE FLOOR FINISH PLANS
F-1	CARPET TILE	INTERFACE	AERIAL COLLECTION AE315 - 9.845" x 39.38"	105817 MIST/AQUAMARINE	
F-2	RUBBER FLOORING	NORA BY INTERFACE	NORAPLAN ENVIRONCARE - 24" X 24"	7077 GRADUATION	
F-3	RESINOUS FLOORING	DUR-A-FLEX	ACCELERA C	FIELDSTONE	
F-4	EPOXY FLOORING	STONHARD	STONTEC 6"		
F-5	LVT	INTERFACE	NATURAL WOODGRAINS - 9.845" x 39.38"	A00210 TEAK	INSTALATION PATTERN: HERRINGBONE
F-6	CONCRETE				
F-7	GYM FLOORING	GERFLOR	TARAFLEX MULTI-USE 6.2	6381 MAPLE	
BASE					
B-1	WOOD		4"		
B-2	RUBBER WALL BASE	JOHNSONITE	TRADITIONL VINYL 4" 1/8 VN2	STONE COTTAGE	
B-3	TILE		4"		
B-4	RESINOUS COVE BASE	DUR-A-FLEX	ACCELERA C	FIELDSTONE	RESTROOMS
CEILING					
C-1	ACOUSTIC CEILING TILE	USG	TYPICAL 2' X 2', MARS HIGH CAC; #86186	WHITE TILE/WHITE GRID	GRID USG DX/DXL
C-2	ACOUSTIC CEILING TILE	USG	KITCHEN LAY-IN PANEL CLIMAPLUS PERFORMANCE; #3410 2' x 4'	WHITE TILE/WHITE GRID	GRID USG DX/DXL
C-3	PAINTED GYPSUM BOARD				SEE PAINT COLOR SCHEDULE
C-4	EXPOSED STRUCTURE				SEE PAINT COLOR SCHEDULE
C--W1	WOOD CEILING	ACOUFELT	SOFTENUP CEILING SYSTEM 2'X3' SLATS ON T-BAR CEILING		
WALLS					
W-1	PAINTED GYPSUM BOARD				SEE SEE PAINT SCHEDULE
W-2	TILE				
A	PORCELAIN TILE	DALTILE	BEE HIVE MEDLEY	SUN GREEN/BLUE P044	
B	GLAZED PORCELAIN MOSAIC	EMSER	CUADRO 9"X14" W50CUAFRRO0914MOP	ROYAL	CLASSROOM BLACKSPLASH/WATER FOUNTAIN
C	CERAMIC MOSAIC	EMSER	NEWTRO 12" X 12" W51NEWTNA1212MSKP	NAVY	TEEN CLASSROOM/WATER FOUNTAIN
W-3	WALL PADDING	RUBBER FLOORING INC.	2' X 5' WALL PADS	NAVY BLUE	
W-4	WOOD TILE	TEAKITILES	KAI	LIGHT RUSTIC - 083 OCEANSIDE	WALLMOUNTED/TEAK BACKING
W-5	VINYL GRAPHIC	KOROSEAL	DSO121 EGGSHELL SUBSTRATE	WHITE	CUSTOM GRAPHICS
W-6	PLYWOOD WALL				
W-7	STOREFRONT				
COUNTERTOPS					
SS-1	EVERFORM SOLID SURFACE	FORMICA	505	SEAGLASS	COUNTERTOPS/CLASSROOM
SS-2	EVERFORM SOLID SURFACE	FORMICA	102	ARCTIC	RECEPTION/CHECK IN DESK
PLASTIC LAMINATE					
PL-1	PLASTIC LAMINATE	FORMICA	8910 RAW BIRCHLY	MATTE FINISH	CASEWORK
PL-2	FENIX PLASTIC LAMINATE		JO720 0.8MM	NERO NIGRO	RECEPTION/CHECK IN DESK
WOOD VENEER					
WV-1	WOOD VENEER				

BUILDING MATERIAL SCHEDULE - EXTERIOR

KEY	DESCRIPTION	MANUFACTURER (BASIS OF DESIGN)	MODEL NUMBER	COLOR	REMARKS
CMU					
CMU-1	EXTERIOR CMU	BASELITE			SEE EXTERIOR ELEVATION
	CMU VENEER 1 & 2				
STANDING SEAM ROOF					
SR-1	STANDING SEAM ROOF	AEP SPAN	SPANSEAM		SEE EXTERIOR ELEVATION
WALL PANEL					
WP-1	ARCHITECTURAL WALL PANEL	NICHIHA	WOOD SERIES		SEE EXTERIOR ELEVATION

tsk
225 South Arlington Avenue
Reno NV, 89501
phone: 775.857.2949
fax: 775.857.2403
www.tska.com

THESE DRAWINGS AND SPECIFICATIONS ARE THE PROPERTY OF TATE SNYDER KIMSEY ARCHITECTS AND MAY NOT BE REPRODUCED OR USED FOR ANY PURPOSE WITHOUT THE ARCHITECTS WRITTEN CONSENT. AS INSTRUMENTS OF SERVICE, THESE DOCUMENTS ARE NOT FINAL AND READY FOR USE, AND THEREFORE NOT VALID, UNLESS THEY ARE SEALED, SIGNED AND DATED.

Copyright, Ltd 2023

Consultant

PLEASE RECYCLE

Project
CITY OF FERNLEY CRRC

Job No: 21-058.00

Owner
CITY OF FERNLEY

50 % CONSTRUCTION DOCUMENTS

REVISIONS		
REV	DATE	DESCRIPTION

Sheet Title
MATERIAL FINISH SCHEDULE

Date: MARCH 21, 2023
Sheet No:
A2.00B

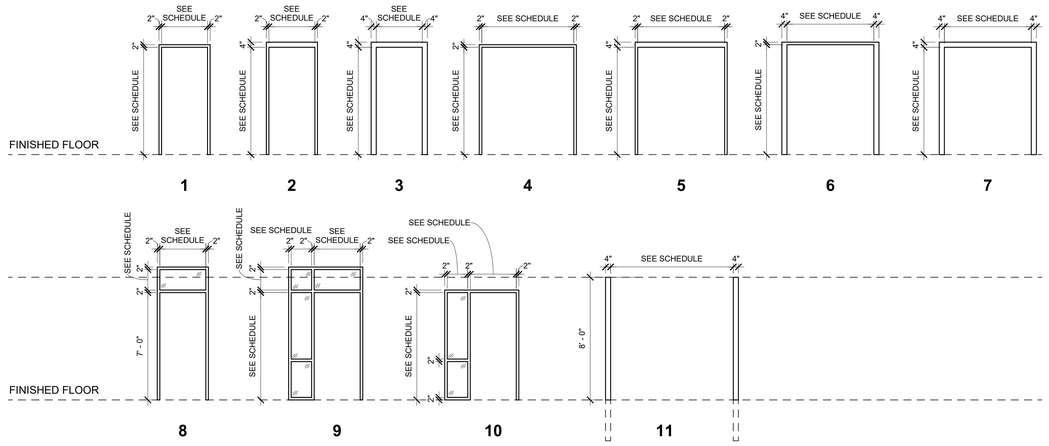

DOOR FRAME TYPES
SCALE: 1/4" = 1'-0"

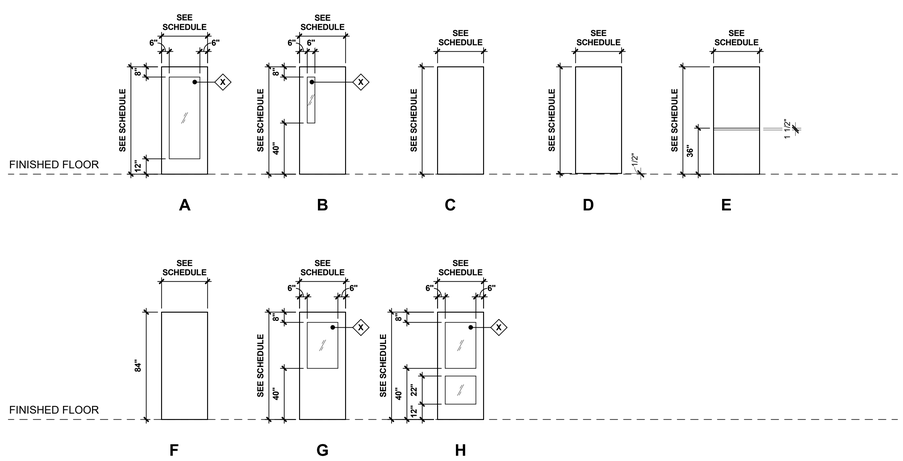

DOOR PANEL TYPES
SCALE: 1/4" = 1'-0"

DOOR SCHEDULE - ALT. B

BVV	RM. NO.	PR	PANEL SIZE W	H	T	TYPE	MAT'L		FRAME TYPE	MAT'L	HEAD DTL	SILL DTL	JAMB DTL LATCH	JAMB DTL HINGE	HDWR	LABEL	REMARKS
147A	147		3' - 0"	7' - 0"	1 3/4"	A	AL		8	AL					07		ELECTRIFIED OPENING
147B	147		6' - 0"	7' - 0"	1 3/4"	B	HM		4	HM					32		ELECTRIFIED OPENING
148A	148	PR	4' - 0"	7' - 0"	1 3/4"	C	HM		1	HM					19		
148B	148	PR	4' - 0"	7' - 0"	1 3/4"	C	HM		1	HM					19		
149A	149	PR	6' - 0"	7' - 0"	1 3/4"	G	AL		4	AL					02		
149B	149	PR	6' - 0"	7' - 0"	1 3/4"	G	AL		4	AL					02		
149C	149	PR	6' - 0"	7' - 0"	1 3/4"	G	AL		4	AL					02		
149D	149	PR	6' - 0"	7' - 0"	1 3/4"	G	AL		4	AL					02		
150	150		3' - 0"	7' - 0"	1 3/4"	C	WD		1	WD					34		
151	151		3' - 0"	7' - 0"	1 3/4"	C	WD		1	WD					34		

FINISHED FLOOR

tsk
225 South Arlington Avenue
Reno NV, 89501
phone: 775.857.2949
fax: 775.857.2403
www.tska.com

THESE DRAWINGS AND SPECIFICATIONS ARE THE PROPERTY OF TATE SNYDER KIMSEY ARCHITECTS AND MAY NOT BE REPRODUCED OR USED FOR ANY PURPOSE WITHOUT THE ARCHITECTS WRITTEN CONSENT. AS INSTRUMENTS OF SERVICE, THESE DOCUMENTS ARE NOT FINAL AND READY FOR USE, AND THEREFORE NOT VALID, UNLESS THEY ARE SEALED, SIGNED AND DATED.

Copyright, Ltd 2023

Consultant

PLEASE RECYCLE

Project
CITY OF FERNLEY CRRC

Job No: 21-058.00

Owner
CITY OF FERNLEY

50 % CONSTRUCTION DOCUMENTS

REVISIONS

REV	DATE	DESCRIPTION

Sheet Title
DOOR SCHEDULE - ALT. B

Date: MARCH 21, 2023
Sheet No:
A2.10B

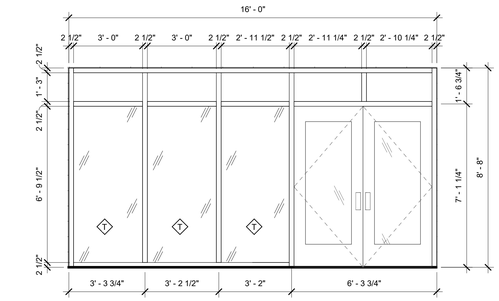

6 TYPE L - ALT. B
SCALE: 3/8" = 1'-0"

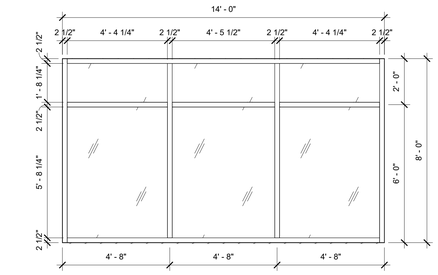

3 TYPE O - ALT. B
SCALE: 3/8" = 1'-0"

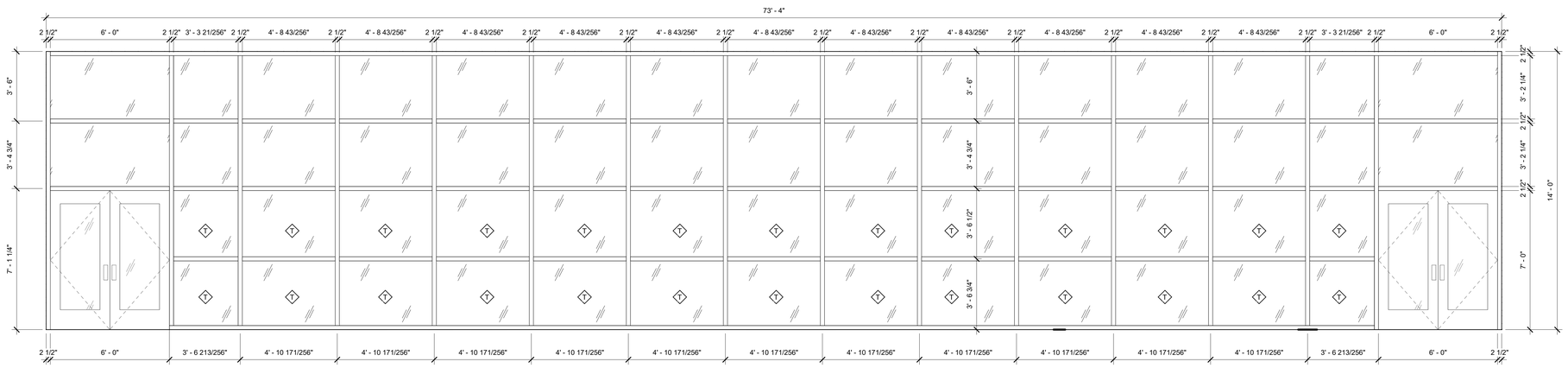

2 TYPE M - ALT. B
SCALE: 3/8" = 1'-0"

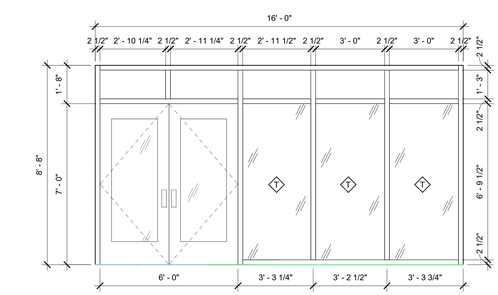

1 TYPE N - ALT. B
SCALE: 3/8" = 1'-0"

tsk
225 South Arlington Avenue
Reno NV, 89501
phone: 775.857.2949
fax: 775.857.2403
www.tska.com

THESE DRAWINGS AND SPECIFICATIONS ARE THE PROPERTY OF TATE SNYDER KIMSEY ARCHITECTS AND MAY NOT BE REPRODUCED OR USED FOR ANY PURPOSE WITHOUT THE ARCHITECTS WRITTEN CONSENT. AS INSTRUMENTS OF SERVICE, THESE DOCUMENTS ARE NOT FINAL AND READY FOR USE, AND THEREFORE NOT VALID, UNLESS THEY ARE SEALED, SIGNED AND DATED.

Copyright, Ltd 2023

Consultant

PLEASE RECYCLE

Project
CITY OF FERNLEY CRRC

Job No: 21-058.00

Owner
CITY OF FERNLEY

50 % CONSTRUCTION DOCUMENTS

REVISIONS		
REV	DATE	DESCRIPTION

Sheet Title
WINDOW SCHEDULE - ALT B

Date: MARCH 21, 2023
Sheet No:
A2.40B

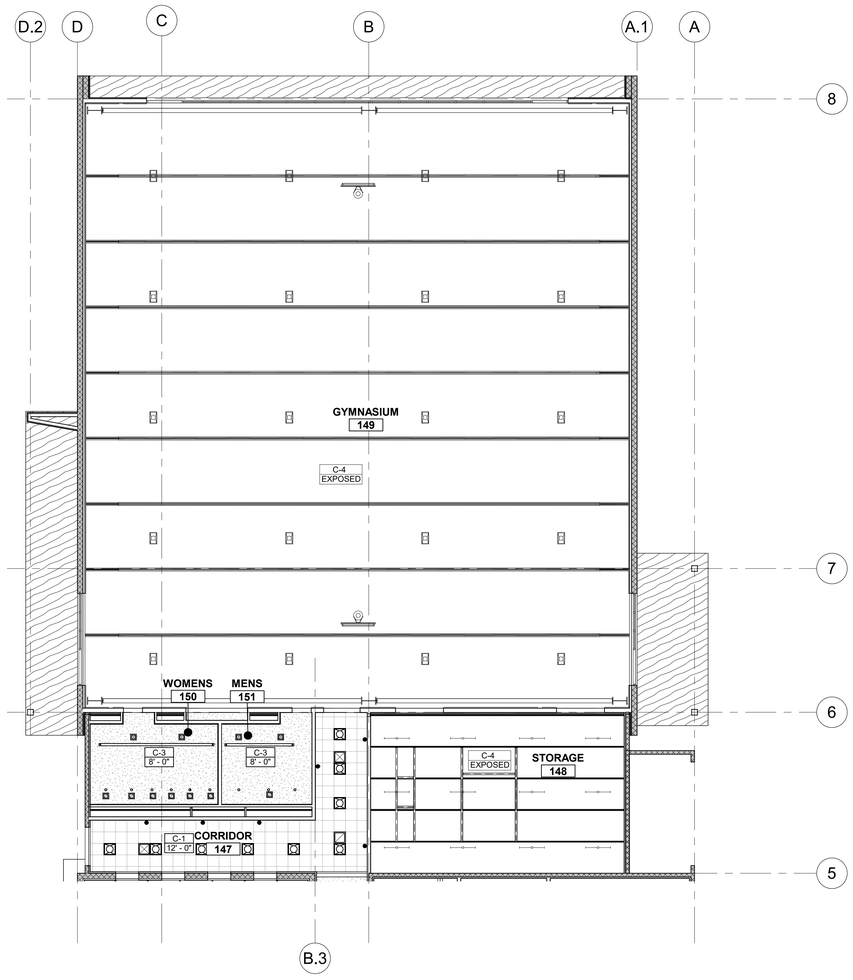

1 REFLECTED CEILING PLAN - ALT. B
SCALE: 3/32" = 1'-0"

NORTH

GENERAL NOTES

1. SEE FINISH SCHEDULE FOR CEILING HEIGHTS AND FINISHES NOT SHOWN ON PLAN.
2. SPRINKLER HEADS TO BE CENTERED IN ALL CORRIDORS AND IN CEILING TILES WHERE TILES OCCUR.
3. MAINTAIN MINIMUM 3" CLEAR BETWEEN LIGHTS, DIFFUSERS, SPEAKERS, ETC.
4. CEILING/SOFFITS ELEVATIONS ARE BASED FROM FINISH FLOOR ELEVATIONS.
5. SEE FINISH SCHEDULE FOR EXPOSED STRUCTURE TO BE PAINTED.

KEYNOTES

LEGEND

- GYP — FINISH TAG
- ACT 12' - 0" — CEILING TAG
- 24" x 24" ACOUSTIC CEILING TILE
- 24" x 48" ACOUSTIC CEILING TILE
- WOOD CEILING
- FRAMED GYPSUM BOARD CEILING, SEE FINISH SCHEDULE
- EXPOSED STRUCTURE. SEE STRUCTURAL DETAILS.
- DIFUSER
- RETURN
- LIGHT FIXTURE
- LINEAR LIGHT FIXTURE
- SCONCE

tsk
225 South Arlington Avenue
Reno NV, 89501
phone: 775.857.2949
fax: 775.857.2403
www.tska.com

THESE DRAWINGS AND SPECIFICATIONS ARE THE PROPERTY OF TATE SNYDER KIMSEY ARCHITECTS AND MAY NOT BE REPRODUCED OR USED FOR ANY PURPOSE WITHOUT THE ARCHITECTS WRITTEN CONSENT.
AS INSTRUMENTS OF SERVICE, THESE DOCUMENTS ARE NOT FINAL AND READY FOR USE, AND THEREFORE NOT VALID, UNLESS THEY ARE SEALED, SIGNED AND DATED.
Copyright, Ltd 2023

Consultant

PLEASE RECYCLE

Project
CITY OF FERNLEY CRRC

Job No: 21-058.00

Owner
CITY OF FERNLEY

50 % CONSTRUCTION DOCUMENTS

REVISIONS		
REV	DATE	DESCRIPTION

Sheet Title
REFLECTED CEILING PLAN - ALT. B

Date: MARCH 21, 2023
Sheet No:
A3.01B

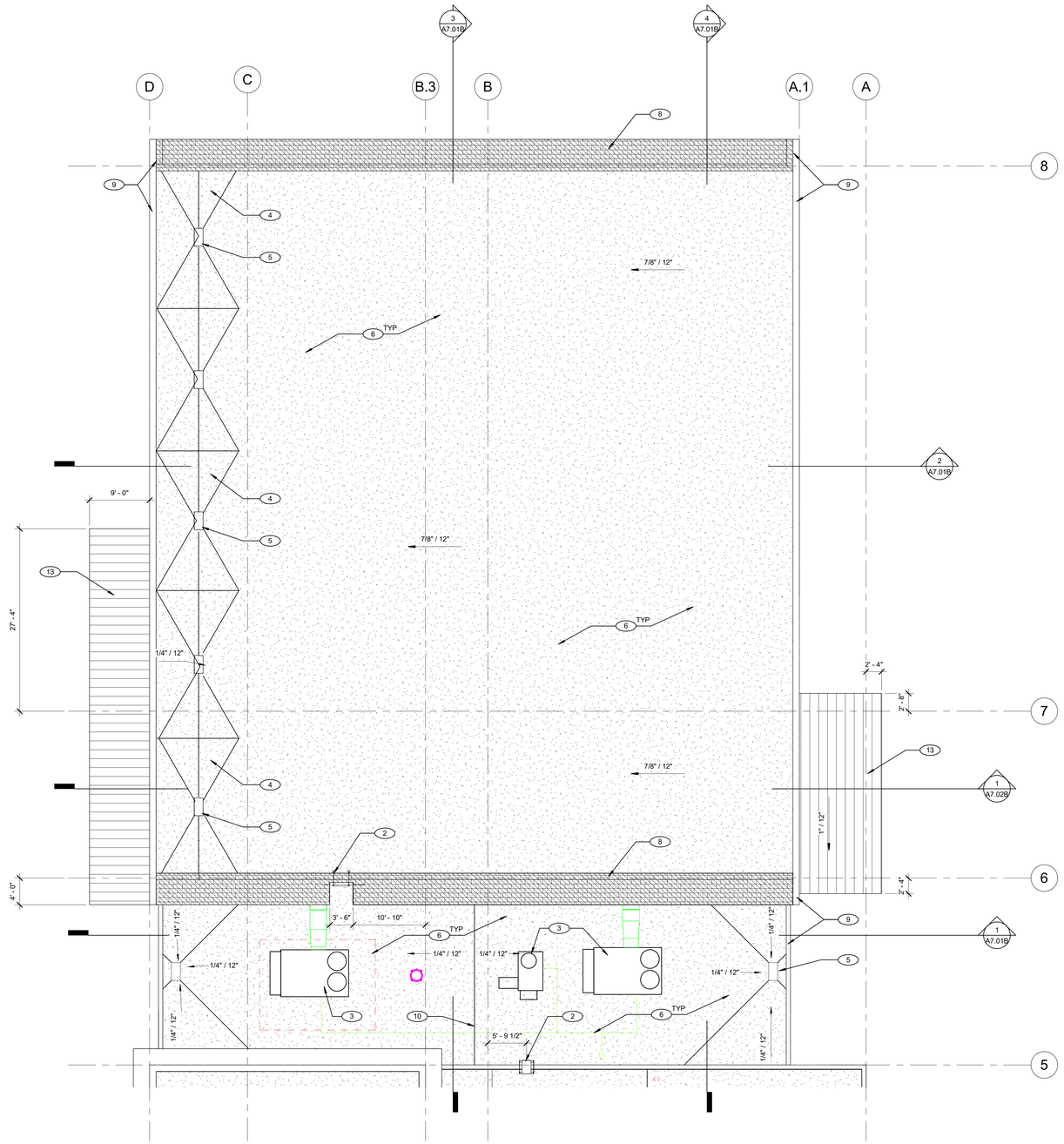

1 ROOF PLAN - GYMNASIUM
SCALE: 1/8" = 1'-0"

NORTH

GENERAL NOTES

1. REFER TO MECH. DWGS FOR ROOF TOP MECH EQUIPMENTS.
2. SEE EXTERIOR ELEVATIONS FOR TOP OF WALL ELEVATIONS.
3. ALL ROOF DRAINS SHALL BE A MIN. OF 2'-0" CLEAR FROM ALL PARAPETS OR WALLS.
4. DIRECTIONAL ARROW ON ROOF PLAN INDICATE DIRECTION OF ROOF SLOPE TO ROOF DRAIN.
5. ALL MAIN ROOF DRAINS SHALL BE LOCATED AT THE LOWEST POSSIBLE ROOF ELEVATIONS. NOTIFY THE ARCHITECT OF ANY CONFLICTS PRIOR TO ROOF DRAIN AND PIPING INSTALLATION.
6. CRICKETS ALL ROOF MECHANICAL UNITS, HATCHES, ETC.. SLOPE MIN. 1/2" PER FOOT.
7. THERE ARE TO BE NO FLAT SPOTS ON THE ROOF. ALL AREAS SHALL BE SLOPED.
8. PROVIDED 3'-0" X 3'-0" TRAFFIC PAD AT TOP AND BOTTOM OF EACH ROOF LADDER.
9. TYPICAL PIPE PENETRATIONS, SEE DETAIL XX/AX.XX

KEYNOTES

1. ROOF HATCH, SEE 1/A4.21
2. ROOF CROSSOVER LADDER, SEE ROOF DETAILS.
3. MECHANICAL UNITS & CURBS, SEE MECH. DWGS.
4. ROOF CRICKETS, SEE ROOF DETAILS
5. ROOF DRAINS, SEE ROOF DETAILS
6. TPO ROOFING WITH 5" ROOF INSULATION. SEE ROOF DWGS.
7. STANDING SEAM & INSULATION. SEE ROOF PLANS.
8. CMU VENEER ROOF SOFFIT, SEE ROOF DETAILS.
9. PRECAST CONCRETE PARAPET CAP. SEE ROOF DETAILS.
10. ROOF RIDIGLINE
11. METAL GUTTER W/ SLOPE TO DRAIN PIPES.
12. SNOW/ICE GUARD. SEE SPECIFICATIONS.
13. STANDING SEAM ROOF. SEE ROOF PLANS.
14. METAL PANEL ROOF SOFFIT, SEE ROOF DETAILS.
15. STANDING SEAM VALLEY, SEE ROOF DETAILS.
16. STANDING SEAM O/TRASH CAN WASH. SEE ROOF DETAILS

LEGEND

tsk
225 South Arlington Avenue
Reno NV, 89501
phone: 775.857.2949
fax: 775.857.2403
www.tska.com

THESE DRAWINGS AND SPECIFICATIONS ARE THE PROPERTY OF TATE SNYDER KIMSEY ARCHITECTS AND MAY NOT BE REPRODUCED OR USED FOR ANY PURPOSE WITHOUT THE ARCHITECTS WRITTEN CONSENT. AS INSTRUMENTS OF SERVICE, THESE DOCUMENTS ARE NOT FINAL AND READY FOR USE, AND THEREFORE NOT VALID, UNLESS THEY ARE SEALED, SIGNED AND DATED.

Copyright, Ltd 2023

Consultant

PLEASE RECYCLE

Project
CITY OF FERNLEY CRRC

Job No: 21-058.00

Owner
CITY OF FERNLEY

50 % CONSTRUCTION DOCUMENTS

REVISIONS		
REV	DATE	DESCRIPTION

Sheet Title
ROOF PLAN - ALT. B

Date: MARCH 21, 2023
Sheet No:
A4.01B

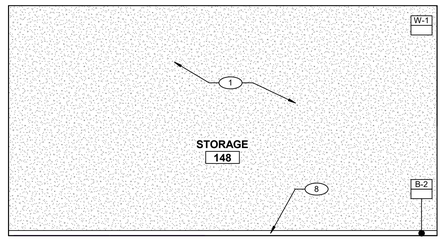

8 STORAGE 148 WEST
SCALE: 1/4" = 1'-0"

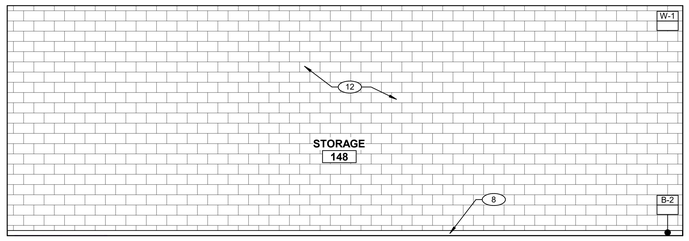

7 STORAGE 148 SOUTH
SCALE: 1/4" = 1'-0"

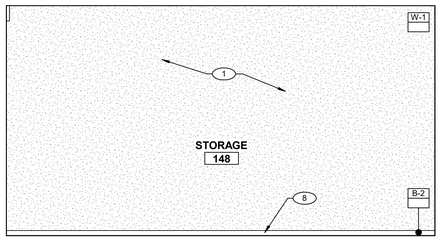

6 STORAGE 148 EAST
SCALE: 1/4" = 1'-0"

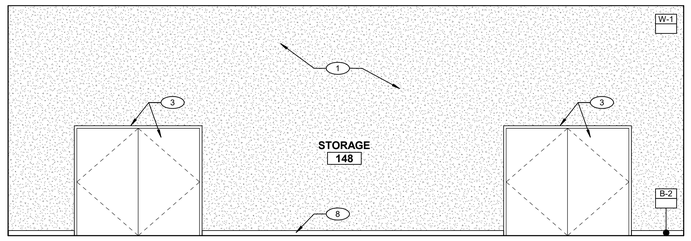

5 STORAGE 148 NORTH
SCALE: 1/4" = 1'-0"

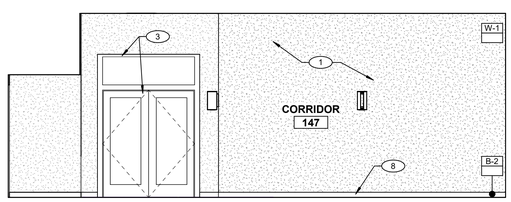

4 CORRIDOR 147 WEST
SCALE: 1/4" = 1'-0"

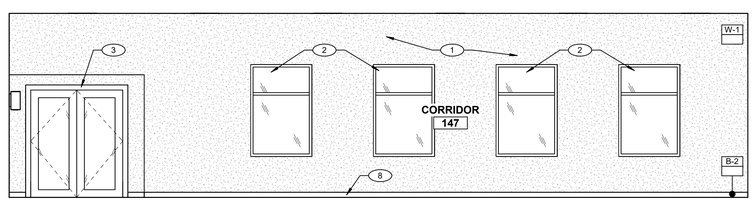

3 CORRIDOR 147 SOUTH
SCALE: 1/4" = 1'-0"

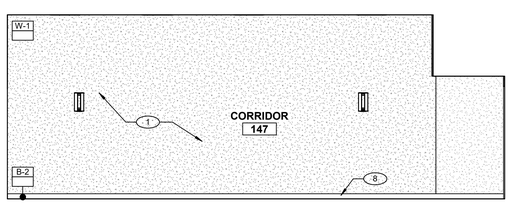

2 CORRIDOR 147 EAST
SCALE: 1/4" = 1'-0"

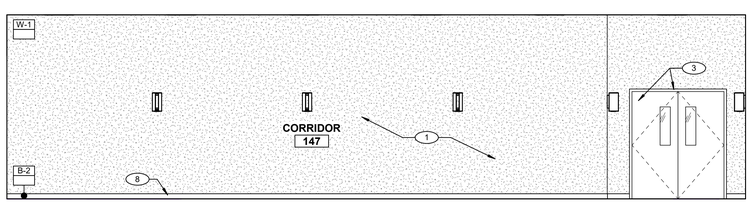

1 CORRIDOR 147 NORTH
SCALE: 1/4" = 1'-0"

GENERAL NOTES

KEYNOTES

1	PAINTED GYP. BD., SEE FINISH SCHEDULE.
2	WINDOW SYSTEM, SEE WINDOW SCHEDULE.
3	DOOR AND FRAME, SEE DOOR SCHEDULE.
4	WOOD BASE, SEE FINISH SCHEDULE.
5	LIGHT FIXTURE, SEE ELECTRICAL DWGS.
6	PAINTED STRUCTURAL FRAMING, SEE STRUCTURAL DWGS.
7	WOOD CEILING SYSTEM, SEE CEILING AND ROOM FINISH SCHEDULE.
8	RUBBER BASE, SEE FINISH SCHEDULE.
9	CASEWORK AND COUNTERTOP, SEE CASEWORK DETAILS.
10	ADA DRINKING FOUNTAIN AND WATER BOTTLE FILLER.
11	TILE WALL, SEE ROOM FINISH SCHEDULE.
12	PAINTED CMU WALL, SEE ROOM FINISH SCHEDULE.
13	DISPLAY CASEWORK.
14	FIRE EXTINGUISHER & CABINET.
15	WASHER & DRYER,OFCI.
16	TWO STATION LAVATORY
17	ROOF ACCESS LADDER, SEE ROOF DETAILS
18	EXPOSED STEEL COLUMN, SEE STRUCT. DWGS.
19	ROOF TRUSS FRAMING, SEE STRUCT. DWGS.
20	GYM WALL PADDING.

LEGEND

tsk
225 South Arlington Avenue
Reno NV, 89501
phone: 775.857.2949
fax: 775.857.2403
www.tska.com

THESE DRAWINGS AND SPECIFICATIONS ARE THE PROPERTY OF TATE SNYDER KIMSEY ARCHITECTS AND MAY NOT BE REPRODUCED OR USED FOR ANY PURPOSE WITHOUT THE ARCHITECTS WRITTEN CONSENT.
AS INSTRUMENTS OF SERVICE, THESE DOCUMENTS ARE NOT FINAL AND READY FOR USE, AND THEREFORE NOT VALID, UNLESS THEY ARE SEALED, SIGNED AND DATED.
Copyright, Ltd 2023

Consultant

PLEASE RECYCLE

Project
CITY OF FERNLEY CRRC

Job No: 21-058.00

Owner
CITY OF FERNLEY

50 % CONSTRUCTION DOCUMENTS

REVISIONS		
REV	DATE	DESCRIPTION

Sheet Title
INTERIOR ELEVATIONS - ALT. B

Date: MARCH 21, 2023
Sheet No:
A5.01B

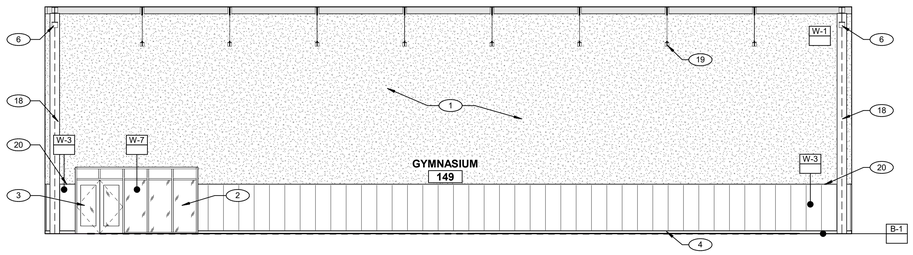

4 GYMNASIUM 149 WEST
SCALE: 1/8" = 1'-0"

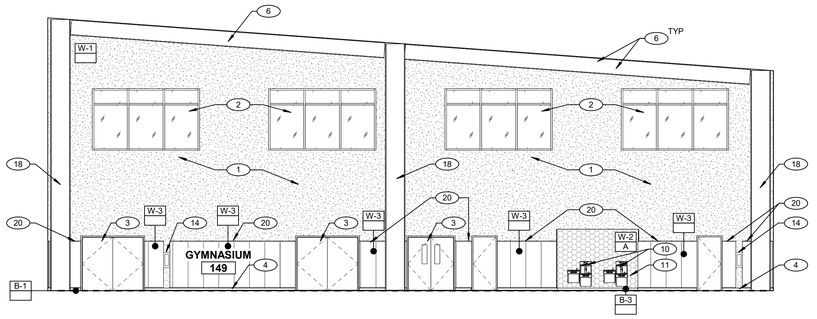

3 GYMNASIUM 149 SOUTH
SCALE: 1/8" = 1'-0"

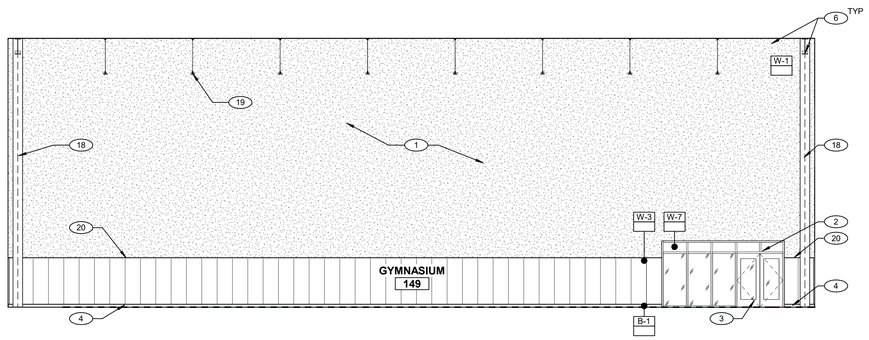

2 GYMNASIUM 149 EAST
SCALE: 1/8" = 1'-0"

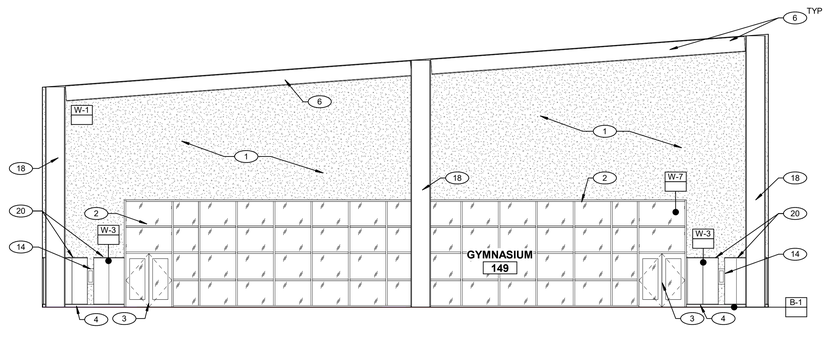

1 GYMNASIUM 149 NORTH
SCALE: 1/8" = 1'-0"

GENERAL NOTES

KEYNOTES

1	PAINTED GYP. BD., SEE FINISH SCHEDULE.
2	WINDOW SYSTEM, SEE WINDOW SCHEDULE.
3	DOOR AND FRAME, SEE DOOR SCHEDULE.
4	WOOD BASE, SEE FINISH SCHEDULE.
5	LIGHT FIXTURE, SEE ELECTRICAL DWGS.
6	PAINTED STRUCTURAL FRAMING, SEE STRUCTURAL DWGS.
7	WOOD CEILING SYSTEM, SEE CEILING AND ROOM FINISH SCHEDULE.
8	RUBBER BASE, SEE FINISH SCHEDULE.
9	CASEWORK AND COUNTERTOP, SEE CASEWORK DETAILS.
10	ADA DRINKING FOUNTAIN AND WATER BOTTLE FILLER.
11	TILE WALL, SEE ROOM FINISH SCHEDULE.
12	PAINTED CMU WALL, SEE ROOM FINISH SCHEDULE.
13	DISPLAY CASEWORK
14	FIRE EXTINGUISHER & CABINET.
15	WASHER & DRYER, OFCI.
16	TWO STATION LAVATORY
17	ROOF ACCESS LADDER, SEE ROOF DETAILS
18	EXPOSED STEEL COLUMN, SEE STRUCT. DWGS.
19	ROOF TRUSS FRAMING, SEE STRUCT. DWGS.
20	GYM WALL PADDING.

LEGEND

tsk
225 South Arlington Avenue
Reno NV, 89501
phone: 775.857.2949
fax: 775.857.2403
www.tska.com

THESE DRAWINGS AND SPECIFICATIONS ARE THE PROPERTY OF TATE SNYDER KIMSEY ARCHITECTS AND MAY NOT BE REPRODUCED OR USED FOR ANY PURPOSE WITHOUT THE ARCHITECTS WRITTEN CONSENT.
AS INSTRUMENTS OF SERVICE, THESE DOCUMENTS ARE NOT FINAL AND READY FOR USE, AND THEREFORE NOT VALID, UNLESS THEY ARE SEALED, SIGNED AND DATED.
Copyright, Ltd 2023

Consultant

PLEASE RECYCLE

Project
CITY OF FERNLEY CRRC

Job No: 21-058.00

Owner
CITY OF FERNLEY

50 % CONSTRUCTION DOCUMENTS

REVISIONS		
REV	DATE	DESCRIPTION

Sheet Title
INTERIOR ELEVATIONS - ALT. B

Date: MARCH 21, 2023
Sheet No:
A5.02B

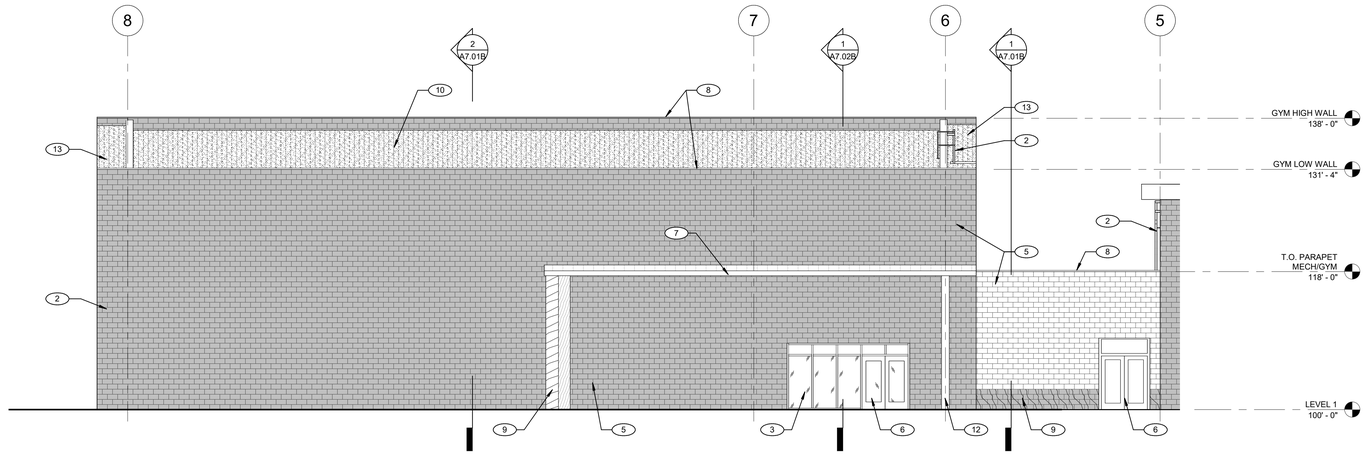

3 EXTERIOR WEST GYMNASIUM
SCALE: 1/8" = 1'-0"

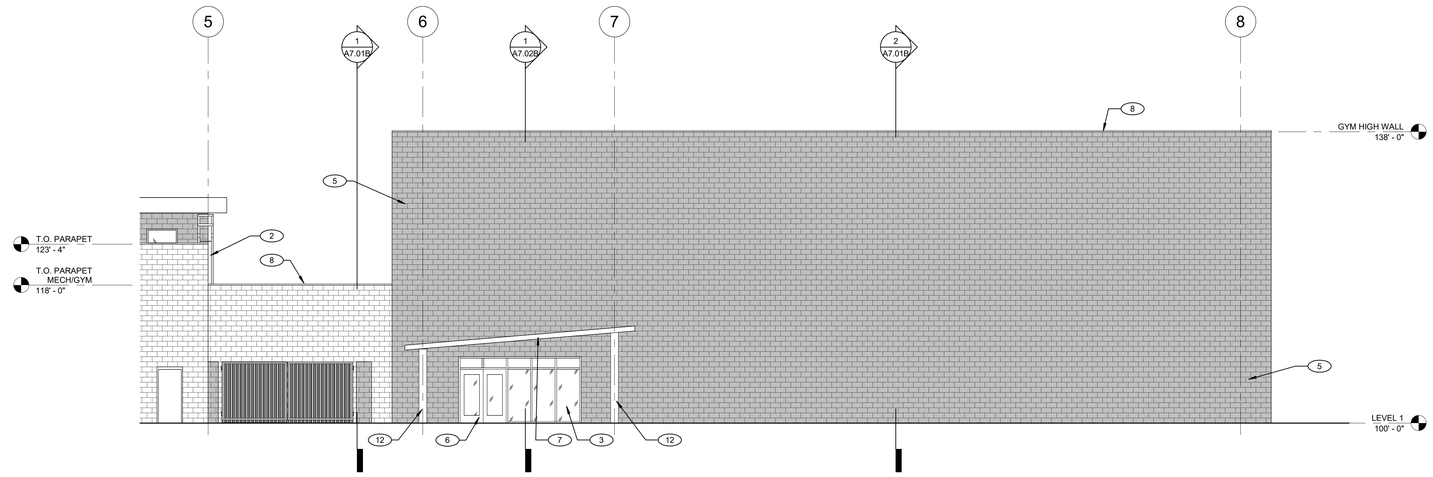

2 EXTERIOR EAST GYMNASIUM
SCALE: 1/8" = 1'-0"

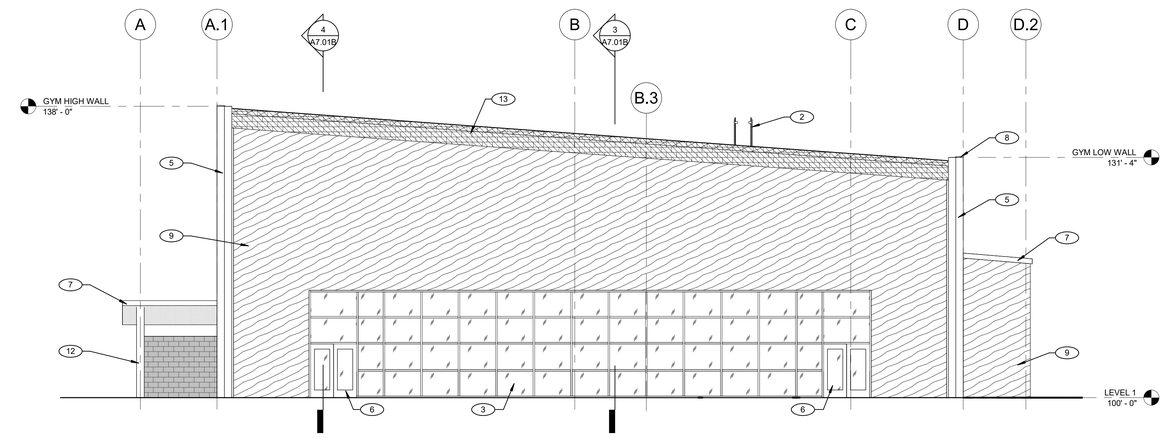

1 EXTERIOR NORTH GYMNASIUM
SCALE: 1/8" = 1'-0"

GENERAL NOTES

1. ALL FLOOR AND (T.O.) PARAPET ELEVATIONS SHOWN ARE TAKEN FROM ED LEVEL WHICH IS EQUAL 100'-0". CIVIL FINISH FLOOR LEVEL XXXX.XX
2. ALL EXPOSED MASONRY TO RECEIVE GRAFFITI COATING, INCLUDING ALL SITE WALLS.
3. SEE SHEET AX.XX FOR MATERIAL FINISH INFORMATION.
4. SEE ARCHITECTURAL SITE SHEETS FOR RETAINING WALLS, SITE STAIRS, AND SITE PLANTERS.

KEYNOTES

1. PAINTED METAL GATE & SUPPORTS, SEE DOOR SCHEDULE
2. ROOF ACCESS LADDER, SEE ROOF DETAILS
3. WINDOW SYSTEM, SEE WINDOW SCHEDULE.
4. METAL PANEL SYSTEM, SEE DETAIL X/AX.XX
5. CMU WALL, SEE LEGEND FOR TYPE.
6. DOOR AND FRAME, SEE DOOR SCHEDULE.
7. STANDING SEAM ROOF. SEE ROOF PLANS.
8. METAL PARAPET CAP. SEE ROOF DETAILS.
9. WOOD RAIN SCREEN, SEE LEGEND.
10. TPO ROOFING, SEE ROOF PLANS
11. LIGHT FIXTURE, SEE ELECT. DWGS.
12. PAINTED STEEL COLUMN, SEE STRUCTURAL DWGS.
13. CMU STONE VENEER, SEE FINISH SCHEDULE.
14. GUTTER & DOWNSPOUT
15. CLAMP ON SNOW FENCE

LEGEND

- GLAZING
- METAL PANELING
- WOOD RAIN SCREEN
- CMU 1
- CMU 2
- CMU 3
- CMU VENEER

tsk
225 South Arlington Avenue
Reno NV, 89501
phone: 775.857.2949
fax: 775.857.2403
www.tska.com

THESE DRAWINGS AND SPECIFICATIONS ARE THE PROPERTY OF TATE SNYDER KIMSEY ARCHITECTS AND MAY NOT BE REPRODUCED OR USED FOR ANY PURPOSE WITHOUT THE ARCHITECTS WRITTEN CONSENT. AS INSTRUMENTS OF SERVICE, THESE DOCUMENTS ARE NOT FINAL AND READY FOR USE, AND THEREFORE NOT VALID, UNLESS THEY ARE SEALED, SIGNED AND DATED.
Copyright, Ltd 2023

Consultant

PLEASE RECYCLE

Project
CITY OF FERNLEY CRRC

Job No: 21-058.00

Owner
CITY OF FERNLEY

50 % CONSTRUCTION DOCUMENTS

REVISIONS		
REV	DATE	DESCRIPTION

Sheet Title
EXTERIOR ELEVATIONS - ALT. B

Date: MARCH 21, 2023
Sheet No:
A6.01B

GENERAL NOTES

1. ALL FLOOR AND (T.O.) PARAPET ELEVATIONS SHOWN ARE TAKEN FROM ED LEVEL WHICH IS EQUAL 100'-0". CIVIL FINISH FLOOR LEVEL XXXX.XX
2. ALL EXPOSED MASONRY TO RECEIVE GRAFFITI COATING, INCLUDING ALL SITE WALLS.
3. SEE SHEET AX.XX FOR MATERIAL FINISH INFORMATION.
4. SEE ARCHITECTURAL SITE SHEETS FOR RETAINING WALLS, SITE STAIRS, AND SITE PLANTERS.

KEYNOTES

1. PAINTED METAL GATE & SUPPORTS, SEE DOOR SCHEDULE
2. ROOF ACCESS LADDER, SEE ROOF DETAILS
3. WINDOW SYSTEM, SEE WINDOW SCHEDULE.
4. METAL PANEL SYSTEM, SEE DETAIL X/AX.XX
5. CMU WALL, SEE LEGEND FOR TYPE.
6. DOOR AND FRAME, SEE DOOR SCHEDULE.
7. STANDING SEAM ROOF. SEE ROOF PLANS.
8. METAL PARAPET CAP. SEE ROOF DETAILS.
9. WOOD RAIN SCREEN, SEE LEGEND.
10. TPO ROOFING, SEE ROOF PLANS
11. LIGHT FIXTURE, SEE ELECT. DWGS.
12. PAINTED STEEL COLUMN, SEE STRUCTURAL DWGS.
13. CMU STONE VENEER, SEE FINISH SCHEDULE.
14. GUTTER & DOWNSPOUT
15. CLAMP ON SNOW FENCE

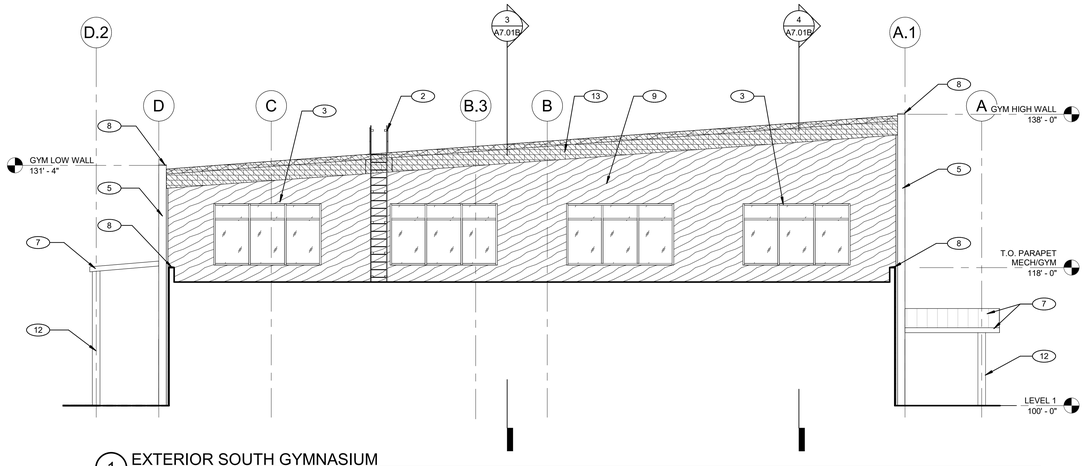

1 EXTERIOR SOUTH GYMNASIUM
SCALE: 1/8" = 1'-0"

LEGEND

- GLAZING
- METAL PANELING
- WOOD RAIN SCREEN
- CMU 1
- CMU 2
- CMU 3
- CMU VENEER

tsk
225 South Arlington Avenue
Reno NV, 89501
phone: 775.857.2949
fax: 775.857.2403
www.tska.com

THESE DRAWINGS AND SPECIFICATIONS ARE THE PROPERTY OF TATE SNYDER KIMSEY ARCHITECTS AND MAY NOT BE REPRODUCED OR USED FOR ANY PURPOSE WITHOUT THE ARCHITECTS WRITTEN CONSENT.
AS INSTRUMENTS OF SERVICE, THESE DOCUMENTS ARE NOT FINAL AND READY FOR USE, AND THEREFORE NOT VALID, UNLESS THEY ARE SEALED, SIGNED AND DATED.

Copyright, Ltd 2023

Consultant

PLEASE RECYCLE

Project
CITY OF FERNLEY CRRC

Job No: 21-058.00

Owner
CITY OF FERNLEY

50 % CONSTRUCTION DOCUMENTS

REVISIONS		
REV	DATE	DESCRIPTION

Sheet Title
EXTERIOR ELEVATIONS - ALT. B

Date: MARCH 21, 2023
Sheet No:
A6.02B

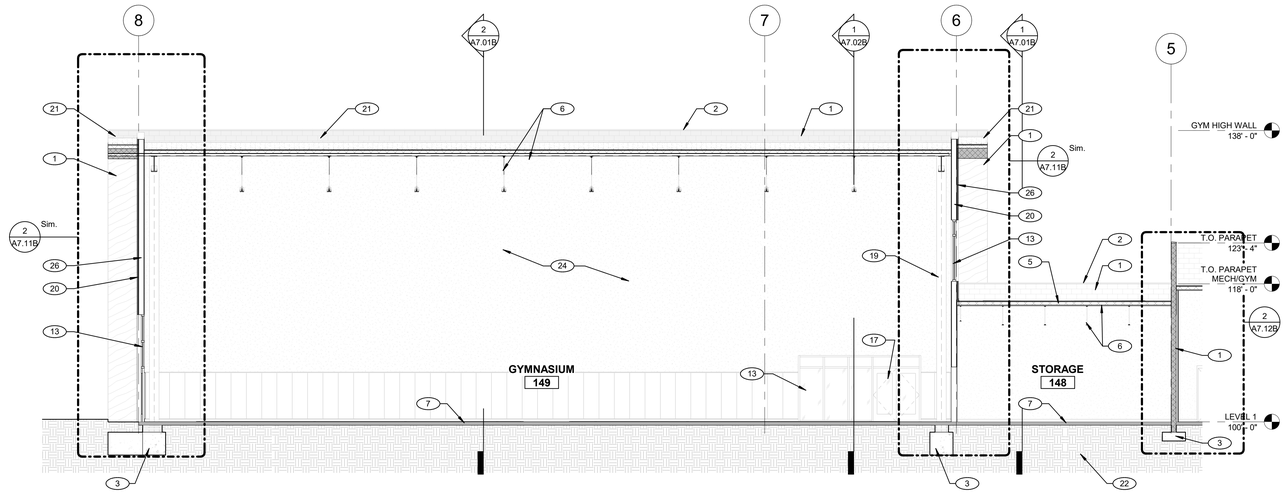

4 Section 15
SCALE: 1/8" = 1'-0"

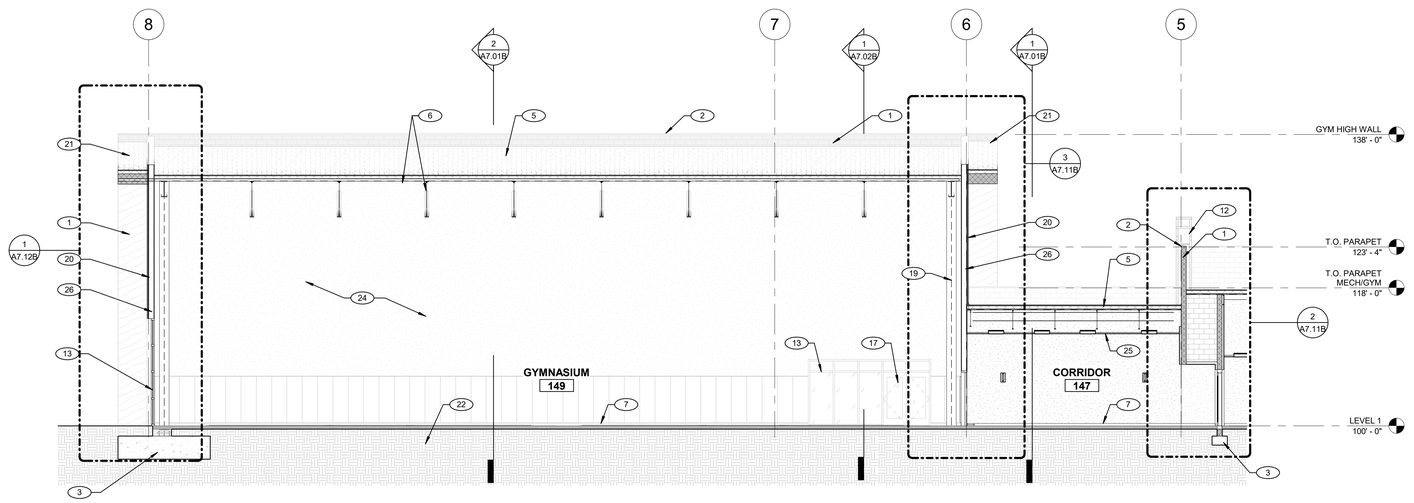

3 Section 14
SCALE: 1/8" = 1'-0"

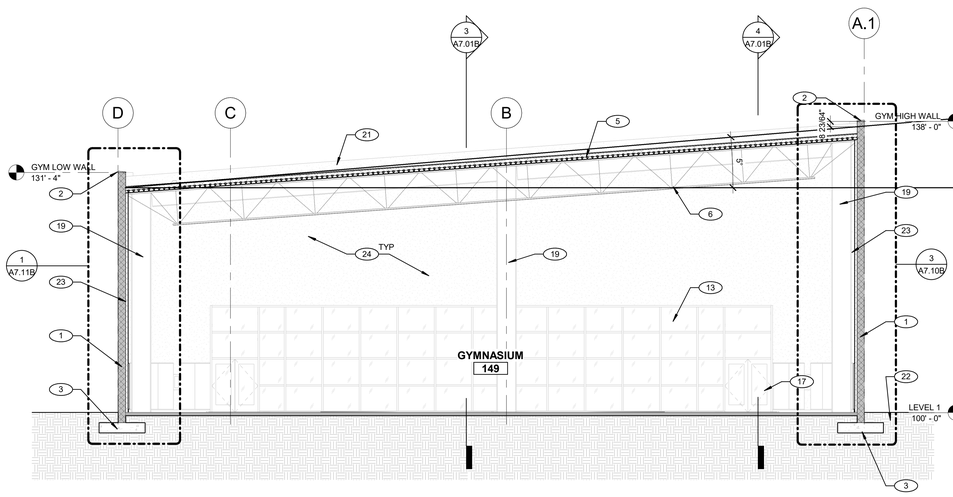

2 Section 13
SCALE: 1/8" = 1'-0"

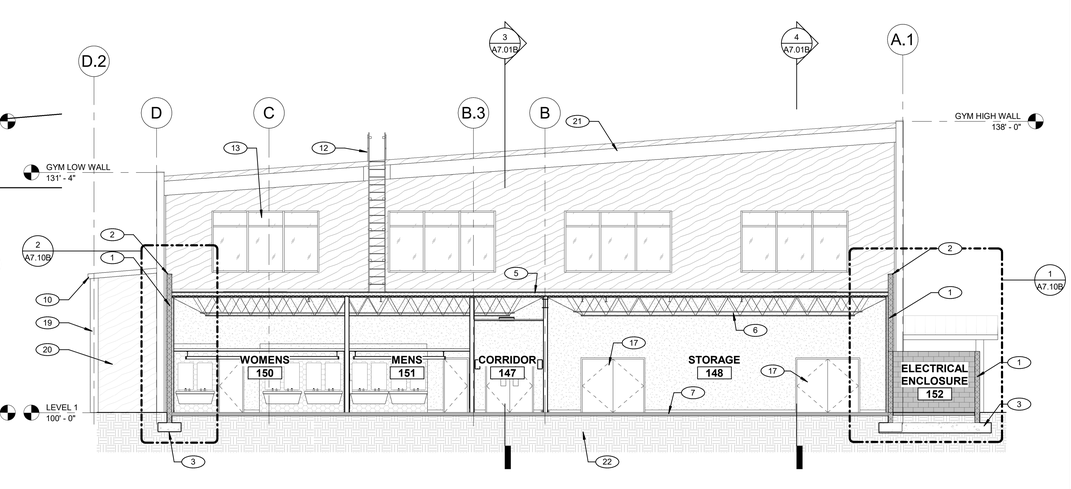

1 Section 12
SCALE: 1/8" = 1'-0"

GENERAL NOTES

1. REFER TO STRUCTURAL DRAWINGS FOR FOOTING AND SLAB REQUIREMENTS.
2. SEE SHEETS A4.XX, ROOF PLAN AND ROOF DETAILS.
3. REFER TO FLOOR PLANS FOR PARTITION TYPES.
4. PAINT ALL EXPOSED INTERIOR AND EXTERIOR STRUCTURAL STEEL - SEE FINISH SCHEDULE AND ELEVATIONS.
5. REFER TO FINISH SCHEDULE FOR FLOOR, WALL, AND CEILING FINISHES.
6. SEE ELEVATIONS FOR CMU COLOR AND TEXTURE.
7. ALL PENETRATIONS THROUGH WALLS WITH SOUND INSULATION SHALL BE SEALED TIGHT WITH ACOUSTICAL INSULATION AND SEALANT.
8. ALL FLOOR AND (T.O.) PARAPET ELEVATIONS SHOWN ARE TAKEN FROM ED LEVEL WHICH IS EQUAL 100'-0". CIVIL FINISH FLOOR LEVEL XXXX.XX
9. REFER TO STRUCTURAL DETAILS FOR TYPICAL INTERIOR PARTITION CONNECTIONS.
10. FOR FINISH OF INTERIOR CMU WALLS EXPOSED, SEE FINISH SCHEDULE.

KEYNOTES

1. CMU WALL, SEE LEGEND FOR TYPE.
2. METAL PARAPET CAP. SEE ROOF DETAILS.
3. CONCRETE FOOTINGS, SEE STRUCT. DWGS.
4. 4" WALL FURRING, SEE WALL TYPES.
5. TPO ROOFING, SEE ROOF PLANS
6. STRUCTURAL FRAMING, SEE STRUCT. DWGS.
7. CONCRETE FLOOR SLAB, SEE STRUCT. DWGS.
8. ROOF HATCH, SEE 1/A4.21
9. METAL PANEL SYSTEM, SEE DETAIL X/AX.XX
10. STANDING SEAM ROOF. SEE ROOF PLANS.
11. PAINTED METAL GATE & SUPPORTS, SEE DOOR SCHEDULE
12. ROOF ACCESS LADDER, SEE ROOF DETAILS
13. WINDOW SYSTEM, SEE WINDOW SCHEDULE.
14. WOOD CEILING SYSTEM, SEE CEILING AND ROOM FINISH SCHEDULE.
15. LIGHT FIXTURE, SEE ELECT. DWGS.
16. GYP. BD. SOFFIT, SEE REF. CLG. PLANS.
17. DOOR AND FRAME, SEE DOOR SCHEDULE
18. SLOPED SIDEWALK, SEE CIVIL DWGS.
19. PAINTED STEEL COLUMN, SEE STRUCTURAL DWGS.
20. WOOD RAIN SCREEN, SEE LEGEND.
21. CMU STONE VENEER, SEE FINISH SCHEDULE.
22. FINISH GRADE, SEE CIVIL DWGS.
23. 2 1/2"MTL. STUD WALL FURRING, SEE WALL TYPES.
24. PAINTED GYP. BD., SEE FINISH SCHEDULE
25. ACT LAY IN CEILING, SEE REF. CLG. PLANS
26. WALL PARTITION, SEE FLOOR PLANS FOR WALL TYPES
27. PAINTED GYP. BD. CEILING, SEE ROOM FINISH SCHEDULE.
28. STEEL BEAM, SEE STRUCT. DWGS.

LEGEND

tsk
225 South Arlington Avenue
Reno NV, 89501
phone: 775.857.2949
fax: 775.857.2403
www.tska.com

THESE DRAWINGS AND SPECIFICATIONS ARE THE PROPERTY OF TATE SNYDER KIMSEY ARCHITECTS AND MAY NOT BE REPRODUCED OR USED FOR ANY PURPOSE WITHOUT THE ARCHITECTS WRITTEN CONSENT. AS INSTRUMENTS OF SERVICE, THESE DOCUMENTS ARE NOT FINAL AND READY FOR USE, AND THEREFORE NOT VALID, UNLESS THEY ARE SEALED, SIGNED AND DATED.

Copyright, Ltd 2023

Consultant

PLEASE RECYCLE

Project
CITY OF FERNLEY CRRC

Job No: 21-058.00

Owner
CITY OF FERNLEY

50 % CONSTRUCTION DOCUMENTS

REVISIONS		
REV	DATE	DESCRIPTION

Sheet Title
BUILDING SECTIONS - ALT. B

Date: MARCH 21, 2023
Sheet No:
A7.01B

GENERAL NOTES

1. REFER TO STRUCTURAL DRAWINGS FOR FOOTING AND SLAB REQUIREMENTS.
2. SEE SHEETS A4.XX, ROOF PLAN AND ROOF DETAILS.
3. REFER TO FLOOR PLANS FOR PARTITION TYPES.
4. PAINT ALL EXPOSED INTERIOR AND EXTERIOR STRUCTURAL STEEL - SEE FINISH SCHEDULE AND ELEVATIONS.
5. REFER TO FINISH SCHEDULE FOR FLOOR, WALL, AND CEILING FINISHES.
6. SEE ELEVATIONS FOR CMU COLOR AND TEXTURE.
7. ALL PENETRATIONS THROUGH WALLS WITH SOUND INSULATION SHALL BE SEALED TIGHT WITH ACOUSTICAL INSULATION AND SEALANT.
8. ALL FLOOR AND (T.O.) PARAPET ELEVATIONS SHOWN ARE TAKEN FROM ED LEVEL WHICH IS EQUAL 100'-0". CIVIL FINISH FLOOR LEVEL XXXX.XX
9. REFER TO STRUCTURAL DETAILS FOR TYPICAL INTERIOR PARTITION CONNECTIONS.
10. FOR FINISH OF INTERIOR CMU WALLS EXPOSED, SEE FINISH SCHEDULE.

KEYNOTES

1. CMU WALL, SEE LEGEND FOR TYPE.
2. METAL PARAPET CAP. SEE ROOF DETAILS.
3. CONCRETE FOOTINGS, SEE STRUCT. DWGS.
4. 4" WALL FURRING, SEE WALL TYPES.
5. TPO ROOFING, SEE ROOF PLANS
6. STRUCTURAL FRAMING, SEE STRUCT. DWGS.
7. CONCRETE FLOOR SLAB, SEE STRUCT. DWGS.
8. ROOF HATCH, SEE 1/A4.21
9. METAL PANEL SYSTEM, SEE DETAIL X/AX.XX
10. STANDING SEAM ROOF. SEE ROOF PLANS.
11. PAINTED METAL GATE & SUPPORTS, SEE DOOR SCHEDULE
12. ROOF ACCESS LADDER, SEE ROOF DETAILS
13. WINDOW SYSTEM, SEE WINDOW SCHEDULE.
14. WOOD CEILING SYSTEM, SEE CEILING AND ROOM FINISH SCHEDULE.
15. LIGHT FIXTURE, SEE ELECT. DWGS.
16. GYP. BD. SOFFIT, SEE REF. CLG. PLANS.
17. DOOR AND FRAME, SEE DOOR SCHEDULE.
18. SLOPED SIDEWALK, SEE CIVIL DWGS.
19. PAINTED STEEL COLUMN, SEE STRUCTURAL DWGS.
20. WOOD RAIN SCREEN, SEE LEGEND.
21. CMU STONE VENEER, SEE FINISH SCHEDULE.
22. FINISH GRADE, SEE CIVIL DWGS.
23. 2 1/2"MTL. STUD WALL FURRING, SEE WALL TYPES.
24. PAINTED GYP. BD., SEE FINISH SCHEDULE
25. ACT LAY IN CEILING, SEE REF. CLG. PLANS
26. WALL PARTITION, SEE FLOOR PLANS FOR WALL TYPES
27. PAINTED GYP. BD. CEILING, SEE ROOM FINISH SCHEDULE.
28. STEEL BEAM, SEE STRUCT. DWGS.

LEGEND

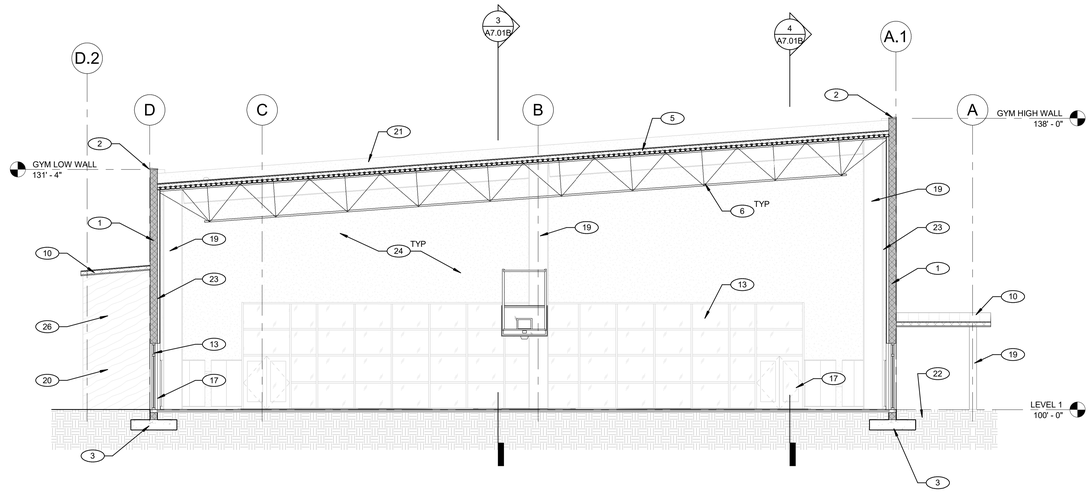

1 Section 16
SCALE: 1/8" = 1'-0"

tsk
225 South Arlington Avenue
Reno NV, 89501
phone: 775.857.2949
fax: 775.857.2403
www.tska.com

THESE DRAWINGS AND SPECIFICATIONS ARE THE PROPERTY OF TATE SNYDER KIMSEY ARCHITECTS AND MAY NOT BE REPRODUCED OR USED FOR ANY PURPOSE WITHOUT THE ARCHITECTS WRITTEN CONSENT.
AS INSTRUMENTS OF SERVICE, THESE DOCUMENTS ARE NOT FINAL AND READY FOR USE, AND THEREFORE NOT VALID, UNLESS THEY ARE SEALED, SIGNED AND DATED.

Copyright, Ltd 2023

Consultant

PLEASE RECYCLE

Project
CITY OF FERNLEY CRRC

Job No: 21-058.00

Owner
CITY OF FERNLEY

50 % CONSTRUCTION DOCUMENTS

REVISIONS		
REV	DATE	DESCRIPTION

Sheet Title
BUILDING SECTIONS - ALT. B

Date: MARCH 21, 2023
Sheet No:
A7.02B

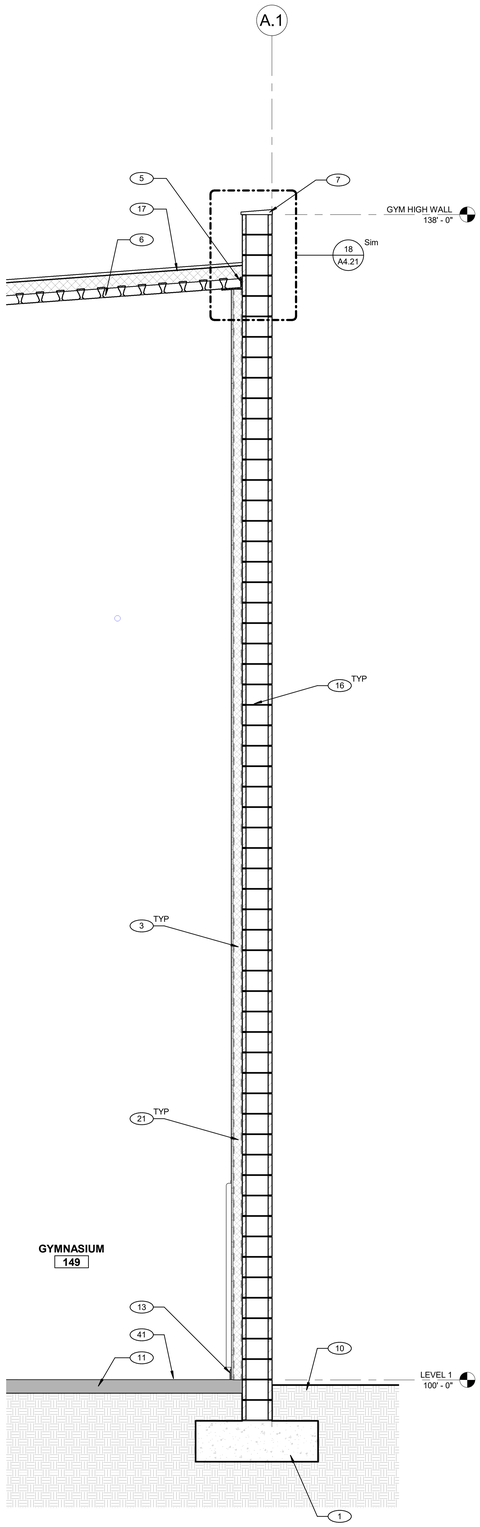

3 WALL SECTION 26 - GYMNASIUM
SCALE: 1/2" = 1'-0"

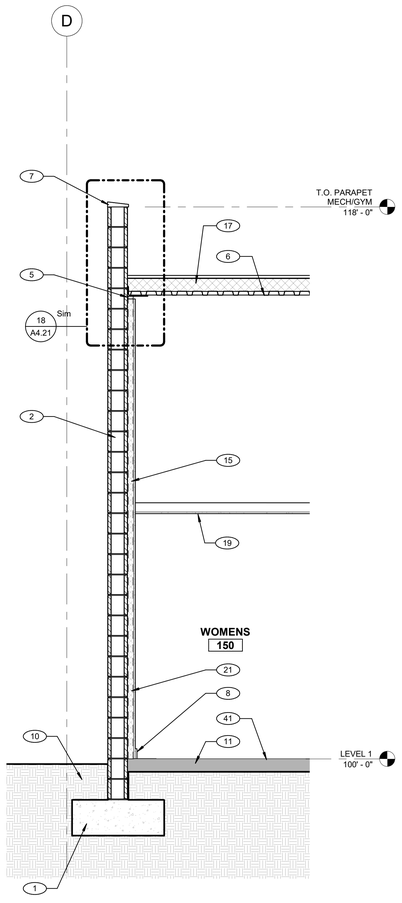

2 WALL SECTION 25 - GYMNASIUM
SCALE: 1/2" = 1'-0"

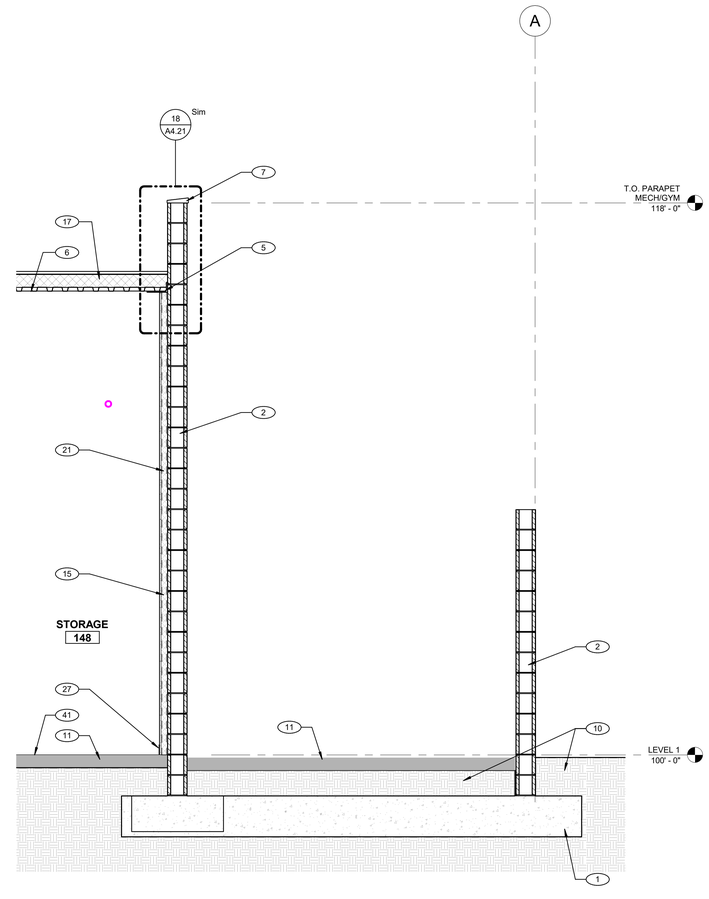

1 WALL SECTION 24 - GYMNASIUM
SCALE: 1/2" = 1'-0"

GENERAL NOTES

1	REFER TO STRUCTURAL DRAWINGS FOR FOOTING AND SLAB REQUIREMENTS.
2	SEE SHEETS A4.XX, ROOF PLAN AND ROOF DETAILS.
3	REFER TO FLOOR PLANS FOR PARTITION TYPES.
4	PAINT ALL EXPOSED INTERIOR AND EXTERIOR STRUCTURAL STEEL - SEE FINISH SCHEDULE AND ELEVATIONS.
5	REFER TO FINISH SCHEDULE FOR FLOOR, WALL, AND CEILING FINISHES.
6	SEE ELEVATIONS FOR CMU COLOR AND TEXTURE.
7	ALL PENETRATIONS THROUGH WALLS WITH SOUND INSULATION SHALL BE SEALED TIGHT WITH ACOUSTICAL INSULATION AND SEALANT.
8	ALL FLOOR AND (T.O.) PARAPET ELEVATIONS SHOWN ARE TAKEN FROM ED LEVEL WHICH IS EQUAL 100'-0". CIVIL FINISH FLOOR LEVEL XXXX.XX
9	REFER TO STRUCTURAL DETAILS FOR TYPICAL INTERIOR PARTITION CONNECTIONS.
10	FOR FINISH OF INTERIOR CMU WALLS EXPOSED, SEE FINISH SCHEDULE.

KEYNOTES

1	CONCRETE FOOTINGS, SEE STRUCT. DWGS.
2	8" CMU WALL, SEE LEGEND FOR TYPE.
3	3 5/8" MTL STUD WALL FURRING, SEE WALL TYPES.
4	ROOF TRUSS FRAMING, SEE STRUCT. DWGS.
5	STRUCTURAL BENT EDGE PLATE. SEE STRUCT. DWGS
6	STRUCTURAL ROOF DECK, SEE STRUCT. DWGS.
7	PRECAST CONCRETE PARAPET CAP. SEE ROOF DETAILS.
8	TILE WALL BASE, SEE ROOM FINISH SCHEDULE.
9	FRP TEXTURED WALL PANELS, SEE ROOM FINISH SCHEDULE.
10	FINISH GRADE, SEE CIVIL DWGS.
11	CONCRETE FLOOR SLAB, SEE STRUCT. DWGS.
12	WALL PARTITION, SEE FLOOR PLANS FOR WALL TYPES
13	WOOD BASE, SEE FINISH SCHEDULE.
14	ACT LAY IN CEILING, SEE REF. CLG. PLANS
15	2 1/2" MTL. STUD WALL FURRING, SEE WALL TYPES.
16	12" CMU WALL, SEE LEGEND FOR TYPE.
17	TPO ROOFING WITH 5" ROOF INSULATION. SEE ROOF DWGS.
18	TILE WALL, SEE ROOM FINISH SCHEDULE.
19	PAINTED GYP. BD. CEILING, SEE ROOM FINISH SCHEDULE.
20	STEEL BEAM, SEE STRUCT. DWGS.
21	RIGID WALL INSULATION, SEE WALL TYPES.
22	METAL PANEL ROOF SOFFIT, SEE ROOF DETAILS.
23	STANDING SEAM & INSULATION. SEE ROOF PLANS.
24	LIGHT FIXTURE, SEE ELECT. DWGS.
25	WOOD CEILING SYSTEM, SEE CEILING AND ROOM FINISH SCHEDULE.
26	WINDOW SYSTEM, SEE WINDOW SCHEDULE.
27	RUBBER BASE, SEE FINISH SCHEDULE.
28	DOOR AND FRAME, SEE DOOR SCHEDULE.
29	PAINTED GYP. BD., SEE FINISH SCHEDULE.
31	TWO STATION LAVATORY
32	SLOPED SIDEWALK, SEE CIVIL DWGS.
33	WATER CLOSET, SEE PLUMBING DWGS.
34	TOILET PARTITION, SEE SPEC'S
35	PAINTED STEEL COLUMN, SEE STRUCTURAL DWGS.
37	1 1/2" MTL. STUD WALL FURRING, SEE WALL TYPES.
38	WOOD RAIN SCREEN, SEE LEGEND.
39	CMU VENEER ROOF SOFFIT, SEE ROOF DETAILS.
40	BATT INSULATION, SEE SPEC'S.
41	FINISHED FLOORING, SEE ROOM FINISH SCHEDULE
42	WOOD RAIN SCREEN CEILING.
43	ROOF DRAIN, SEE ROOF DETAILS
44	SNOW/ICE GUARD. SEE SPECIFICATIONS.
45	METAL GUTTER W/ SLOPE TO DRAIN PIPES.
46	ROOF CROSSOVER LADDER, SEE ROOF DETAILS.
47	PAINTED GYP. BD. SOFFIT, SEE CEILING DETAILS
48	EXPANSION JOINT, SEE ROOF DETAIL XX/A4.01

LEGEND

tsk
225 South Arlington Avenue
Reno NV, 89501
phone: 775.857.2949
fax: 775.857.2403
www.tska.com

THESE DRAWINGS AND SPECIFICATIONS ARE THE PROPERTY OF TATE SNYDER KIMSEY ARCHITECTS AND MAY NOT BE REPRODUCED OR USED FOR ANY PURPOSE WITHOUT THE ARCHITECTS WRITTEN CONSENT. AS INSTRUMENTS OF SERVICE, THESE DOCUMENTS ARE NOT FINAL AND READY FOR USE, AND THEREFORE NOT VALID, UNLESS THEY ARE SEALED, SIGNED AND DATED.
Copyright, Ltd 2023

Consultant

PLEASE RECYCLE

Project
CITY OF FERNLEY CRRC

Job No: 21-058.00

Owner
CITY OF FERNLEY

50 % CONSTRUCTION DOCUMENTS

REVISIONS		
REV	DATE	DESCRIPTION

Sheet Title
WALL SECTION - ALT. B

Date: MARCH 21, 2023
Sheet No:
A7.10B

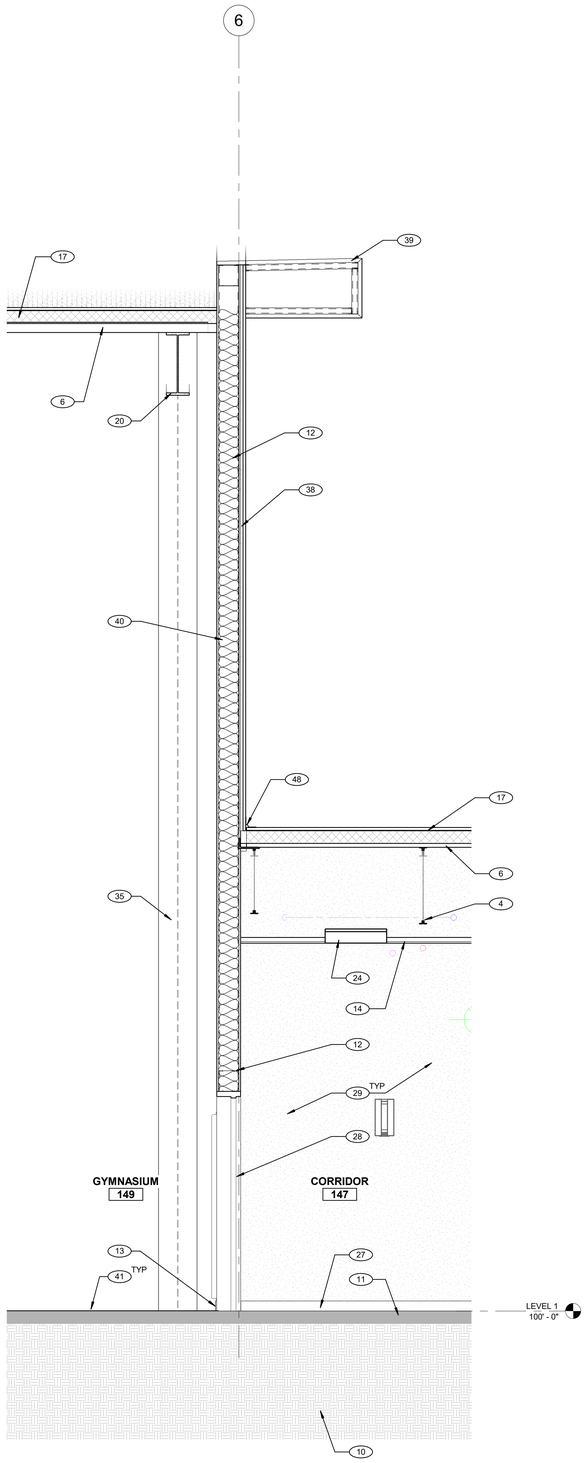

3 WALL SECTION 29 - GYMNASIUM
SCALE: 1/2" = 1'-0"

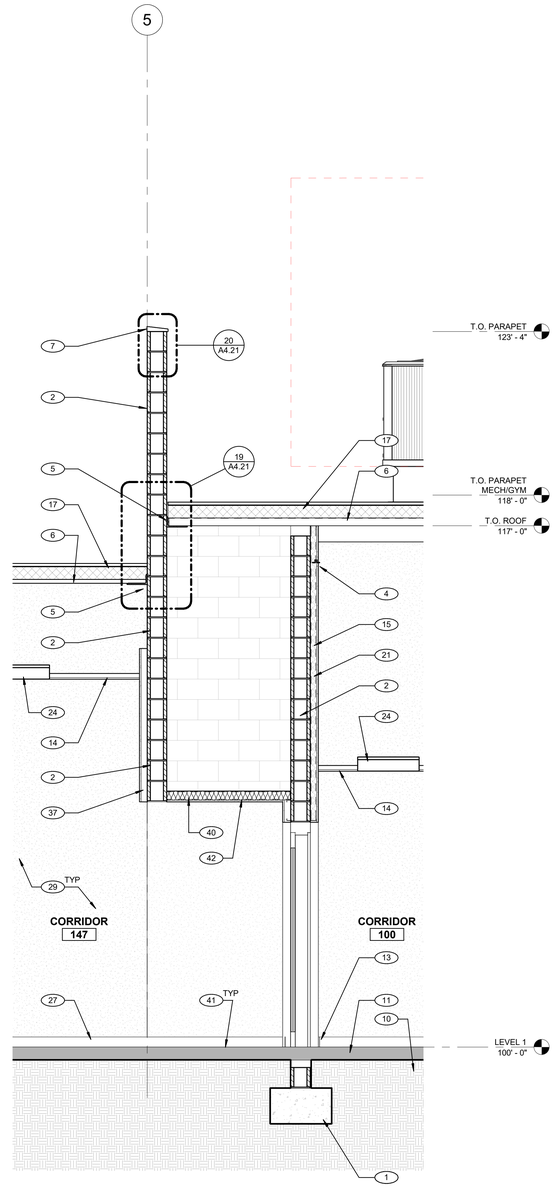

2 WALL SECTION 28 - GYMNASIUM
SCALE: 1/2" = 1'-0"

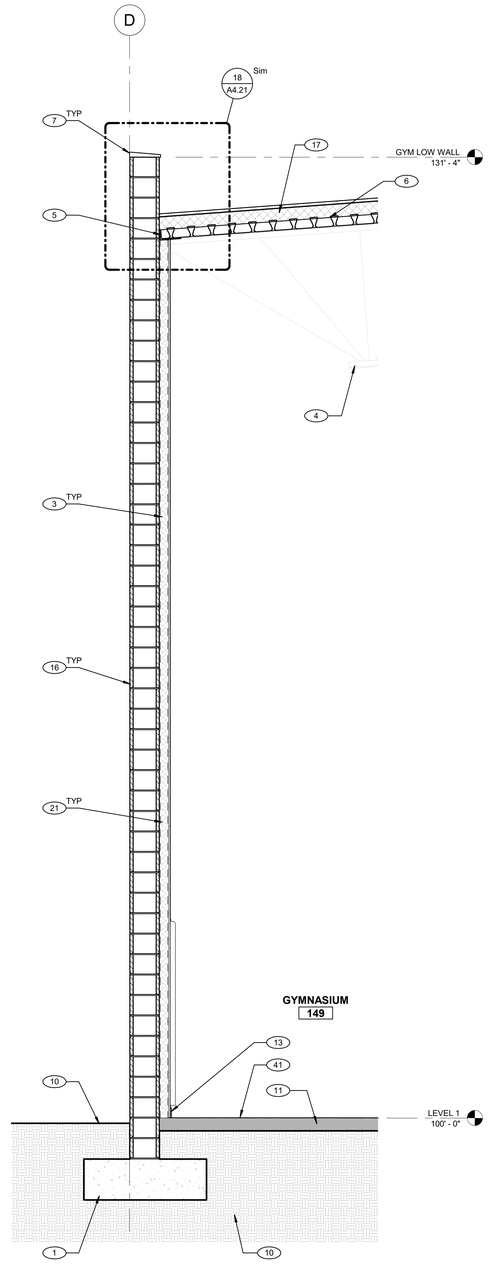

1 WALL SECTION 27 - GYMNASIUM
SCALE: 1/2" = 1'-0"

GENERAL NOTES

1. REFER TO STRUCTURAL DRAWINGS FOR FOOTING AND SLAB REQUIREMENTS.
2. SEE SHEETS A4.XX, ROOF PLAN AND ROOF DETAILS.
3. REFER TO FLOOR PLANS FOR PARTITION TYPES.
4. PAINT ALL EXPOSED INTERIOR AND EXTERIOR STRUCTURAL STEEL - SEE FINISH SCHEDULE AND ELEVATIONS.
5. REFER TO FINISH SCHEDULE FOR FLOOR, WALL, AND CEILING FINISHES.
6. SEE ELEVATIONS FOR CMU COLOR AND TEXTURE.
7. ALL PENETRATIONS THROUGH WALLS WITH SOUND INSULATION SHALL BE SEALED TIGHT WITH ACOUSTICAL INSULATION AND SEALANT.
8. ALL FLOOR AND (T.O.) PARAPET ELEVATIONS SHOWN ARE TAKEN FROM ED LEVEL WHICH IS EQUAL 100'-0". CIVIL FINISH FLOOR LEVEL XXXX.XX
9. REFER TO STRUCTURAL DETAILS FOR TYPICAL INTERIOR PARTITION CONNECTIONS.
10. FOR FINISH OF INTERIOR CMU WALLS EXPOSED, SEE FINISH SCHEDULE.

KEYNOTES

1. CONCRETE FOOTINGS, SEE STRUCT. DWGS.
2. 8" CMU WALL, SEE LEGEND FOR TYPE.
3. 3 5/8" MTL STUD WALL FURRING, SEE WALL TYPES.
4. ROOF TRUSS FRAMING, SEE STRUCT. DWGS.
5. STRUCTURAL BENT EDGE PLATE. SEE STRUCT. DWGS
6. STRUCTURAL ROOF DECK, SEE STRUCT. DWGS.
7. PRECAST CONCRETE PARAPET CAP. SEE ROOF DETAILS.
8. TILE WALL BASE, SEE ROOM FINISH SCHEDULE.
9. FRP TEXTURED WALL PANELS, SEE ROOM FINISH SCHEDULE.
10. FINISH GRADE, SEE CIVIL DWGS.
11. CONCRETE FLOOR SLAB, SEE STRUCT. DWGS.
12. WALL PARTITION, SEE FLOOR PLANS FOR WALL TYPES
13. WOOD BASE, SEE FINISH SCHEDULE.
14. ACT LAY IN CEILING, SEE REF. CLG. PLANS
15. 2 1/2" MTL. STUD WALL FURRING, SEE WALL TYPES.
16. 12" CMU WALL, SEE LEGEND FOR TYPE.
17. TPO ROOFING WITH 5" ROOF INSULATION. SEE ROOF DWGS.
18. TILE WALL, SEE ROOM FINISH SCHEDULE.
19. PAINTED GYP. BD. CEILING, SEE ROOM FINISH SCHEDULE.
20. STEEL BEAM, SEE STRUCT. DWGS.
21. RIGID WALL INSULATION, SEE WALL TYPES.
22. METAL PANEL ROOF SOFFIT, SEE ROOF DETAILS.
23. STANDING SEAM & INSULATION. SEE ROOF PLANS.
24. LIGHT FIXTURE, SEE ELECT. DWGS.
25. WOOD CEILING SYSTEM, SEE CEILING AND ROOM FINISH SCHEDULE.
26. WINDOW SYSTEM, SEE WINDOW SCHEDULE.
27. RUBBER BASE, SEE FINISH SCHEDULE.
28. DOOR AND FRAME, SEE DOOR SCHEDULE.
29. PAINTED GYP. BD., SEE FINISH SCHEDULE.
31. TWO STATION LAVATORY
32. SLOPED SIDEWALK, SEE CIVIL DWGS.
33. WATER CLOSET, SEE PLUMBING DWGS.
34. TOILET PARTITION, SEE SPEC'S
35. PAINTED STEEL COLUMN, SEE STRUCTURAL DWGS.
37. 1 1/2" MTL. STUD WALL FURRING, SEE WALL TYPES.
38. WOOD RAIN SCREEN, SEE LEGEND.
39. CMU VENEER ROOF SOFFIT, SEE ROOF DETAILS.
40. BATT INSULATION, SEE SPEC'S.
41. FINISHED FLOORING, SEE ROOM FINISH SCHEDULE
42. WOOD RAIN SCREEN CEILING.
43. ROOF DRAIN, SEE ROOF DETAILS
44. SNOW/ICE GUARD. SEE SPECIFICATIONS.
45. METAL GUTTER W/ SLOPE TO DRAIN PIPES.
46. ROOF CROSSOVER LADDER, SEE ROOF DETAILS.
47. PAINTED GYP. BD. SOFFIT, SEE CEILING DETAILS
48. EXPANSION JOINT, SEE ROOF DETAIL XX/A4.01

LEGEND

tsk
225 South Arlington Avenue
Reno NV, 89501
phone: 775.857.2949
fax: 775.857.2403
www.tska.com

THESE DRAWINGS AND SPECIFICATIONS ARE THE PROPERTY OF TATE SNYDER KIMSEY ARCHITECTS AND MAY NOT BE REPRODUCED OR USED FOR ANY PURPOSE WITHOUT THE ARCHITECTS WRITTEN CONSENT. AS INSTRUMENTS OF SERVICE, THESE DOCUMENTS ARE NOT FINAL AND READY FOR USE, AND THEREFORE NOT VALID, UNLESS THEY ARE SEALED, SIGNED AND DATED.

Copyright, Ltd 2023

Consultant

PLEASE RECYCLE

Project
CITY OF FERNLEY CRRC

Job No: 21-058.00

Owner
CITY OF FERNLEY

50 % CONSTRUCTION DOCUMENTS

REVISIONS		
REV	DATE	DESCRIPTION

Sheet Title
WALL SECTION - ALT. B

Date: MARCH 21, 2023
Sheet No:
A7.11B

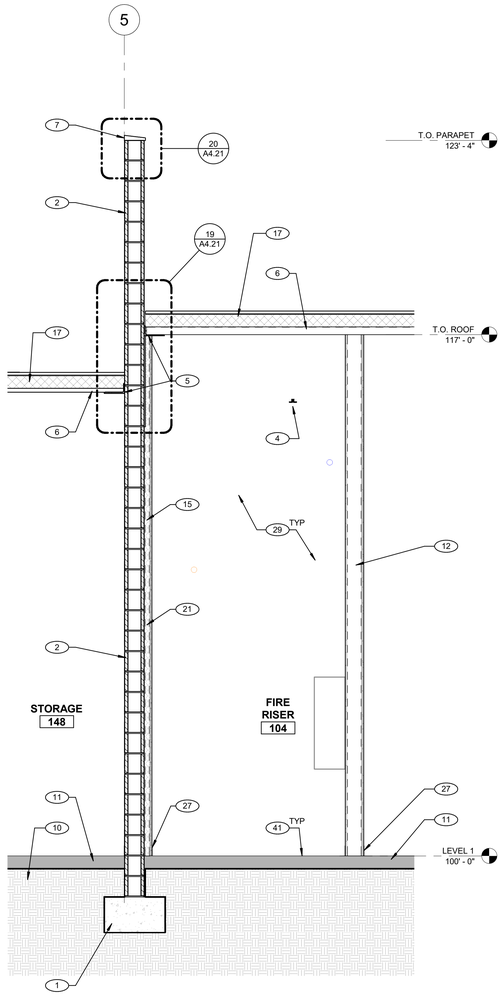

2 WALL SECTION 31 - GYMNASIUM
SCALE: 1/2" = 1'-0"

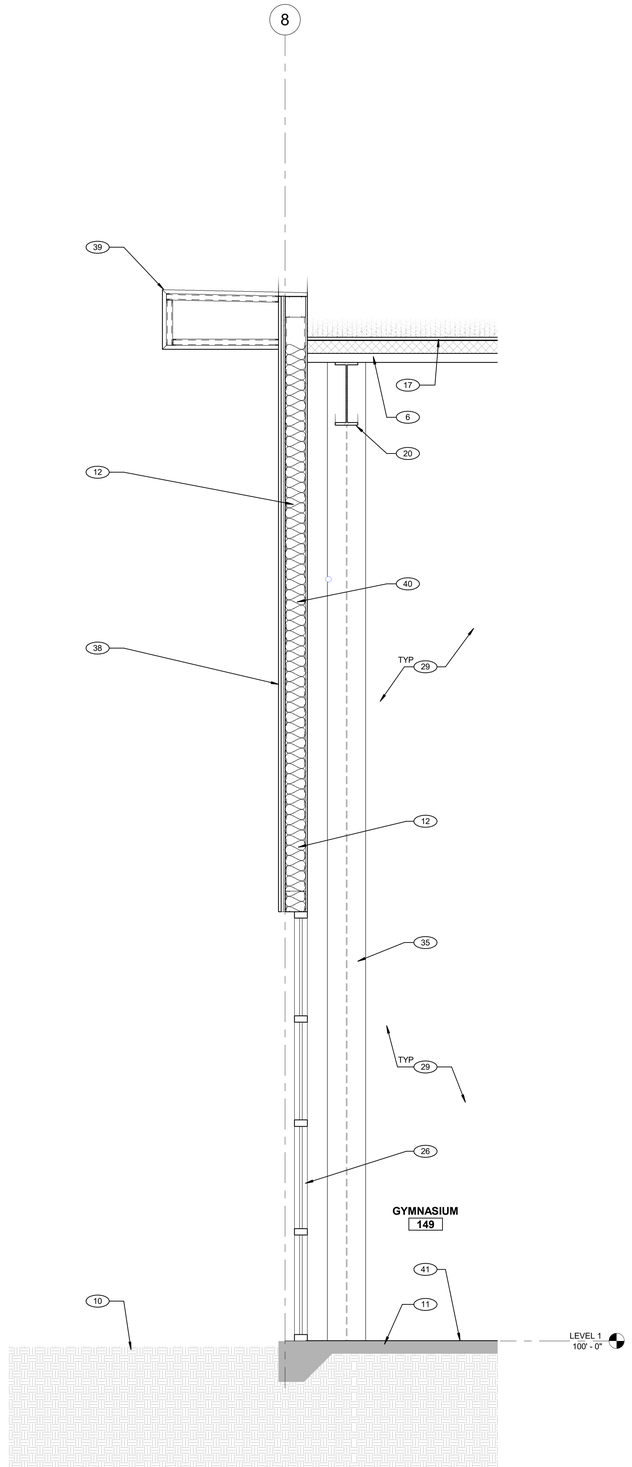

1 WALL SECTION 30 - GYMNASIUM
SCALE: 1/2" = 1'-0"

GENERAL NOTES

1. REFER TO STRUCTURAL DRAWINGS FOR FOOTING AND SLAB REQUIREMENTS.
2. SEE SHEETS A4.XX, ROOF PLAN AND ROOF DETAILS.
3. REFER TO FLOOR PLANS FOR PARTITION TYPES.
4. PAINT ALL EXPOSED INTERIOR AND EXTERIOR STRUCTURAL STEEL - SEE FINISH SCHEDULE AND ELEVATIONS.
5. REFER TO FINISH SCHEDULE FOR FLOOR, WALL, AND CEILING FINISHES.
6. SEE ELEVATIONS FOR CMU COLOR AND TEXTURE.
7. ALL PENETRATIONS THROUGH WALLS WITH SOUND INSULATION SHALL BE SEALED TIGHT WITH ACOUSTICAL INSULATION AND SEALANT.
8. ALL FLOOR AND (T.O.) PARAPET ELEVATIONS SHOWN ARE TAKEN FROM ED LEVEL WHICH IS EQUAL 100'-0". CIVIL FINISH FLOOR LEVEL XXXX.XX
9. REFER TO STRUCTURAL DETAILS FOR TYPICAL INTERIOR PARTITION CONNECTIONS.
10. FOR FINISH OF INTERIOR CMU WALLS EXPOSED, SEE FINISH SCHEDULE.

KEYNOTES

1. CONCRETE FOOTINGS, SEE STRUCT. DWGS.
2. 8" CMU WALL, SEE LEGEND FOR TYPE.
3. 3 5/8" MTL STUD WALL FURRING, SEE WALL TYPES.
4. ROOF TRUSS FRAMING, SEE STRUCT. DWGS.
5. STRUCTURAL BENT EDGE PLATE. SEE STRUCT. DWGS
6. STRUCTURAL ROOF DECK, SEE STRUCT. DWGS.
7. PRECAST CONCRETE PARAPET CAP. SEE ROOF DETAILS.
8. TILE WALL BASE, SEE ROOM FINISH SCHEDULE.
9. FRP TEXTURED WALL PANELS, SEE ROOM FINISH SCHEDULE.
10. FINISH GRADE, SEE CIVIL DWGS.
11. CONCRETE FLOOR SLAB, SEE STRUCT. DWGS.
12. WALL PARTITION, SEE FLOOR PLANS FOR WALL TYPES
13. WOOD BASE, SEE FINISH SCHEDULE.
14. ACT LAY IN CEILING, SEE REF. CLG. PLANS
15. 2 1/2" MTL. STUD WALL FURRING, SEE WALL TYPES.
16. 12" CMU WALL, SEE LEGEND FOR TYPE.
17. TPO ROOFING WITH 5" ROOF INSULATION. SEE ROOF DWGS.
18. TILE WALL, SEE ROOM FINISH SCHEDULE.
19. PAINTED GYP. BD. CEILING, SEE ROOM FINISH SCHEDULE.
20. STEEL BEAM, SEE STRUCT. DWGS.
21. RIGID WALL INSULATION, SEE WALL TYPES.
22. METAL PANEL ROOF SOFFIT, SEE ROOF DETAILS.
23. STANDING SEAM & INSULATION. SEE ROOF PLANS.
24. LIGHT FIXTURE, SEE ELECT. DWGS.
25. WOOD CEILING SYSTEM, SEE CEILING AND ROOM FINISH SCHEDULE.
26. WINDOW SYSTEM, SEE WINDOW SCHEDULE.
27. RUBBER BASE, SEE FINISH SCHEDULE.
28. DOOR AND FRAME, SEE DOOR SCHEDULE.
29. PAINTED GYP. BD., SEE FINISH SCHEDULE.
31. TWO STATION LAVATORY
32. SLOPED SIDEWALK, SEE CIVIL DWGS.
33. WATER CLOSET, SEE PLUMBING DWGS.
34. TOILET PARTITION, SEE SPEC'S
35. PAINTED STEEL COLUMN, SEE STRUCTURAL DWGS.
37. 1 1/2" MTL. STUD WALL FURRING, SEE WALL TYPES.
38. WOOD RAIN SCREEN, SEE LEGEND.
39. CMU VENEER ROOF SOFFIT, SEE ROOF DETAILS.
40. BATT INSULATION, SEE SPEC'S.
41. FINISHED FLOORING, SEE ROOM FINISH SCHEDULE
42. WOOD RAIN SCREEN CEILING.
43. ROOF DRAIN, SEE ROOF DETAILS
44. SNOW/ICE GUARD. SEE SPECIFICATIONS.
45. METAL GUTTER W/ SLOPE TO DRAIN PIPES.
46. ROOF CROSSOVER LADDER, SEE ROOF DETAILS.
47. PAINTED GYP. BD. SOFFIT, SEE CEILING DETAILS
48. EXPANSION JOINT, SEE ROOF DETAIL XX/A4.01

LEGEND

tsk
225 South Arlington Avenue
Reno NV, 89501
phone: 775.857.2949
fax: 775.857.2403
www.tska.com

THESE DRAWINGS AND SPECIFICATIONS ARE THE PROPERTY OF TATE SNYDER KIMSEY ARCHITECTS AND MAY NOT BE REPRODUCED OR USED FOR ANY PURPOSE WITHOUT THE ARCHITECTS WRITTEN CONSENT.
AS INSTRUMENTS OF SERVICE, THESE DOCUMENTS ARE NOT FINAL AND READY FOR USE, AND THEREFORE NOT VALID, UNLESS THEY ARE SEALED, SIGNED AND DATED.

Copyright, Ltd 2023

Consultant

PLEASE RECYCLE

Project
CITY OF FERNLEY CRRC

Job No: 21-058.00

Owner
CITY OF FERNLEY

50 % CONSTRUCTION DOCUMENTS

REVISIONS		
REV	DATE	DESCRIPTION

Sheet Title
WALL SECTION - ALT. B

Date: MARCH 21, 2023
Sheet No:
A7.12B

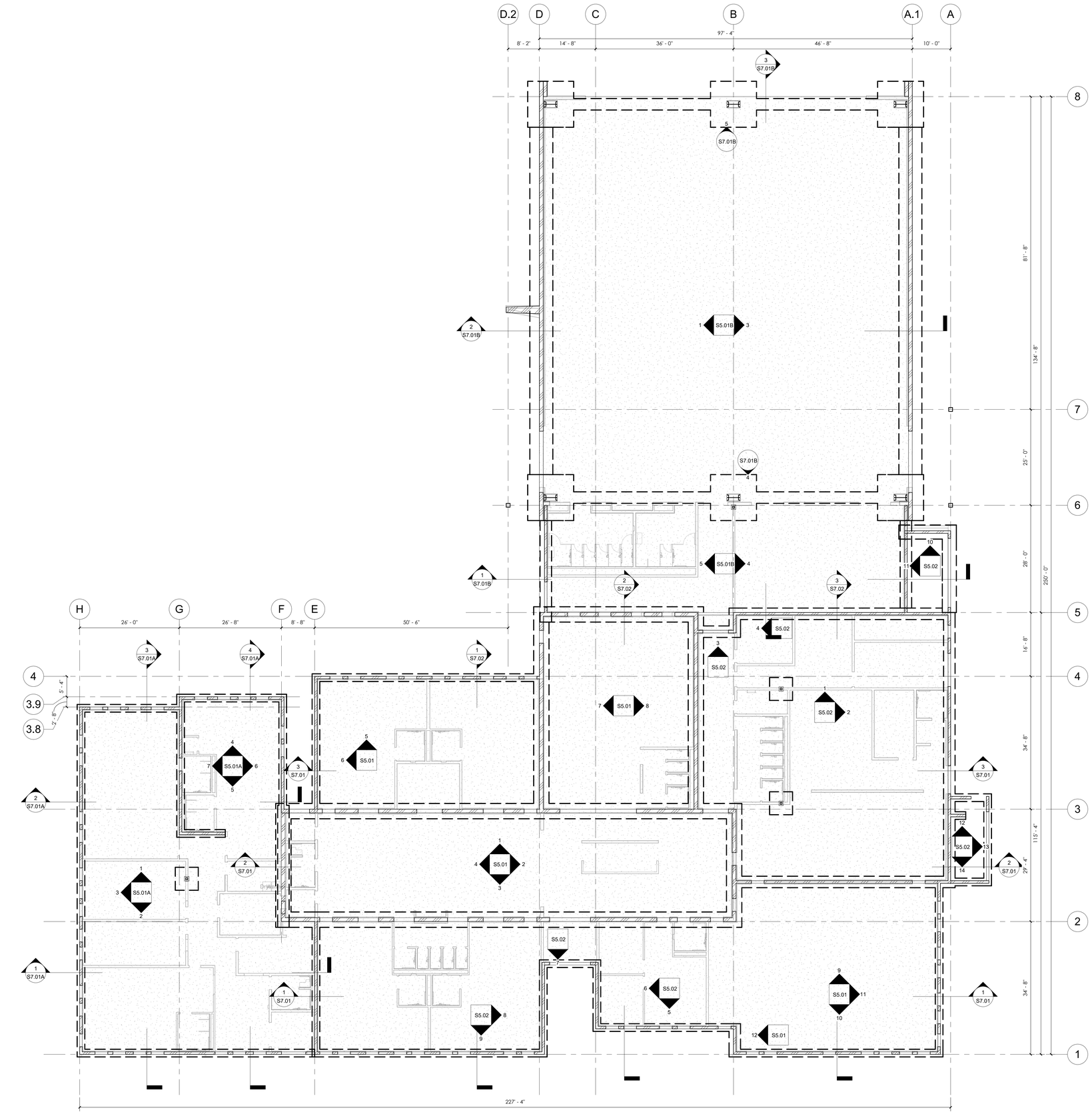

1 OVERALL FOUNDATION PLAN - GYMNASIUM

3/32" = 1'-0"

tsk
225 South Arlington Avenue
Reno NV, 89501
phone: 775.857.2949
fax: 775.857.2403
www.tska.com

NOT FOR CONSTRUCTION

THESE DRAWINGS AND SPECIFICATIONS ARE THE PROPERTY OF TATE SNYDER KIMSEY ARCHITECTS AND MAY NOT BE REPRODUCED OR USED FOR ANY PURPOSE WITHOUT THE ARCHITECTS WRITTEN CONSENT. AS INSTRUMENTS OF SERVICE, THESE DOCUMENTS ARE NOT FINAL AND READY FOR USE, AND THEREFORE NOT VALID, UNLESS THEY ARE SEALED, SIGNED AND DATED.

Copyright, Ltd 2022

Consultant

NELSON WILCOX
STRUCTURAL ENGINEERS
225 S Arlington Ave, Ste B, Reno, NV 89501
www.nelson-wilcox.com

PLEASE RECYCLE

Project
CITY OF FERNLEY CRRC

Job No: 21-058.00

Owner
CITY OF FERNLEY

Job No: 20-22

50% CONSTRUCTION DOCUMENTS

REVISIONS		
REV	DATE	DESCRIPTION

Sheet Title
OVERALL FOUNDATION PLAN - ALT. B

Date: JANUARY 19, 2023
Sheet No:
S1.01B

GYMNASIUM FOUNDATION PLAN NOTES:

1. T.O. EXTERIOR FOOTINGS = 98' - 0" TYP., U.N.O.
2. T.O. INTERIOR FOOTINGS = 99" - 0" TYP., U.N.O.
3. CENTER ALL COLUMN SPOT FOOTINGS BELOW COLUMNS TYP.
4. NO CONDUIT SHALL BE PLACED IN THE SLAB ON GRADE.
5. SEE 15 / S0.2 WHERE UTILITIES ENTER BUILDING OR ARE ADJACENT TO COLUMN FOOTINGS.
6. SEE 16 / S0.2 & GENERAL NOTES FOR ENGINEERING FILL REQUIREMENTS AND SUBGRADE PREPARATION REQUIREMENTS.
7. SEE ARCHITECTURAL AND/OR MECHANICAL/PLUMBING DRAWINGS FOR ANY FLOOR DRAINS OR SINKS. CONTRACTOR TO COORDINATE.
8. SEE 7 / S0.2 FOR TYPICAL SLAB ON GRADE JOINTS. JOINTS TO BE PLACED AT 10'-0" MAX. O.C. AND LOCATED AT ALL RE-ENTRANT SLAB CORNERS, INTERIOR COLUMN LOCATIONS, OR ANY OTHER SLAB ON GRADE DISCONTINUITIES. SEE 12 / S0.2 FOR SLAB ON GRADE DOWELED JOINT INTERSECTIONS.
9. SEE SHEET S2 FOR FOUNDATION SCHEDULE.
10. SEE 6 / S0.2 FOR TYPICAL FOUNDATION REINFORCING LAPS AT CORNERS, ENDS, AND INTERSECTIONS.
11. SEE 10 / S0.2 & 11 / S0.2 FOR TYPICAL REINFORCING HOOKS, BENDS AND HOOKS & BENDS FOR TIES.
12. CONTRACTOR TO VERIFY AND COORDINATE ALL DIMENSIONS AND CONDITIONS WITH ARCH. PRIOR TO FABRICATION OR ERECTION.
13. PLACE 15 MIL VAPOR BARRIER BENEATH CONCRETE SLAB (OVER AGGREGATE BASE) AT LOCATIONS WITH TILE FLOORING (OR OTHER FLOORING SENSITIVE TO MOISTURE). SEAL ALL SEAMS AND SEAL AROUND ALL PENETRATIONS PER VAPOR BARRIER MANUFACTURER RECOMMENDATIONS.
14. SEE SHEETS S0.9 & S0.10 FOR TYPICAL INTERIOR WALL DETAILS.

GYMNASIUM CONTINUOUS FOOTINGS SCHEDULE

MARK	WIDTH	THICK.	REINFORCING CROSSWISE			REINFORCING LENGTHWISE				REMARKS
			SIZE	LENGTH	SPACING (O.C.)	NO.	SIZE	LENGTH	SPACING (O.C.)	
CF2.0	2' - 0"	14"	#4	1' - 6"	24"	3	#5	CONT.	8 11/16"	CROSSWISE REINF. TO BE CENTERED BETWEEN VERT. WALL REINF.
CF3.0	3' - 0"	14"	#5	2' - 6"	12"	4	#5	CONT.	9 13/16"	
CF4.0	4' - 0"	14"	#5	3' - 6"	12"	5	#4	CONT.	10 3/8"	
CF6.0	6' - 0"	16"	#6	5' - 6"	12"	7	#5	CONT.	10 7/8"	
GB36	3' - 0"	36"						CONT.		REINF. CONTINUOUS THROUGH FOOTINGS

GYMNASIUM FOOTING SCHEDULE

MARK	WIDTH	LENGTH	THICK.	REINFORCING CROSSWISE				REINFORCING LENGTHWISE				QUANTITY	REMARKS
				NO.	SIZE	LENGTH	SPACING (O.C.)	NO.	SIZE	LENGTH	SPACING (O.C.)		
F6.0	6' - 0"	6' - 0"	16"		#5	5' - 6"	10 7/8"	7	#5	5' - 6"	10 7/8"	2	
F12A	12' - 0"	12' - 0"	36"	12	#8	11' - 6"	12 7/16"			11' - 6"		6	SEE DETAIL 10/SAD1

GYMNASIUM BASE PLATE / ANCHOR BOLT SCHEDULE

TYPE	QUANTITY	PLATE THICKNESS "T"	GROUT THICKNESS "G"	NUMBER OF ANCHORS	ANCHOR DIAMETER	ANCHOR EMBEDMENT "E"	ANCHOR PROJECTION "P"	CAST-IN OR EPOXY	Description
BP-1	4	3/4"	1 1/2"	4	3/4"	13"	4 1/4"	CAST-IN	Base Plate

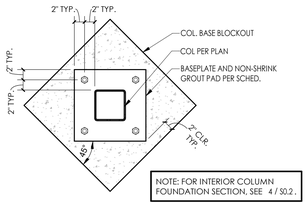

NOTE: FOR INTERIOR COLUMN FOUNDATION SECTION, SEE 4 / S0.2 .

GYMNASIUM - BASEPLATES

GYMNASIUM CMU WALL SCHEDULE

MARK	TYPE	WIDTH	REINFORCEMENT		FOOTING DOWELS	REMARKS
			VERT.	HORIZ.		
W1	CMU	8"	#5 AT 24" O.C., CENTERED	#4 AT 32" O.C.	TO MATCH VERTS.	(2) #5 (HORIZ) CONT. BARS AT T.O. WALL AND/OR ROOF & FLOOR LINE, SEE DETAILS
W2	CMU	12"	#6 AT 24" O.C., AT EA. FACE	#5 AT 24" O.C.	TO MATCH VERTS.	(2) #5 (HORIZ) CONT. BARS AT T.O. WALL AND/OR ROOF & FLOOR LINE, SEE DETAILS
W3	CMU	12"	#6 AT 16" O.C., AT EA. FACE	#5 AT 24" O.C.	TO MATCH VERTS.	(2) #5 (HORIZ) CONT. BARS AT T.O. WALL AND/OR ROOF & FLOOR LINE, SEE DETAILS

NOTES:

1. **SEE WALL ELEVATIONS FOR ADDITIONAL REINFORCING WHERE REQUIRED.**
2. ALL CMU WALLS TO BE FULLY GROUTED.
3. MASONRY SHALL BE CONSTRUCTED OF HOLLOW OPEN END UNITS WHEREVER POSSIBLE AND SHALL BE LAID IN A RUNNING BOND PATTERN.
4. FOLLOW DETAIL 9 / S0.3 FOR MIN. CMU CORNER AND 12B / S0.3 FOR JAMB REINFORCEMENT.
5. JAMB STEEL BARS IN SHORT SHEAR PIERS ARE NOT ADDITIVE TO WALL SCHEDULE STEEL. PLACE THE MORE RESTRICTIVE REINFORCING.
6. PROVIDE HORIZONTAL CORNER BARS AT ALL CORNERS AND INTERSECTING WALLS PER 9 / S0.3 .
7. PROVIDE (2) #5 CONT. HORIZONTAL CHORD STEEL AT ALL ROOF AND FLOOR LINE LEVELS PER DETAILS, U.N.O.
8. PROVIDE CONT. HORIZ. #5 BAR OR BARS AT JOIST WALL ANCHORS PER DETAILS (WHERE OCCURS).
9. ALL HORIZONTAL BARS SHALL BE ANCHORED AROUND END VERTICAL REINFORCING BARS AT JAMBS WITH A STANDARD HOOK.
10. PROVIDE CMU REINFORCEMENT LAP SPLICES PER GENERAL NOTES.
11. BARS E.F. SHALL BE PLACED 1/2" CLEAR OF THE INSIDE FACE OF THE CMU SHELL, INCLUDING AT JAMBS.
12. BARS CENTERED SHALL BE CENTERED IN THE CMU WALL, HORIZ. STEEL TO BE PLACED ALONG SIDE.

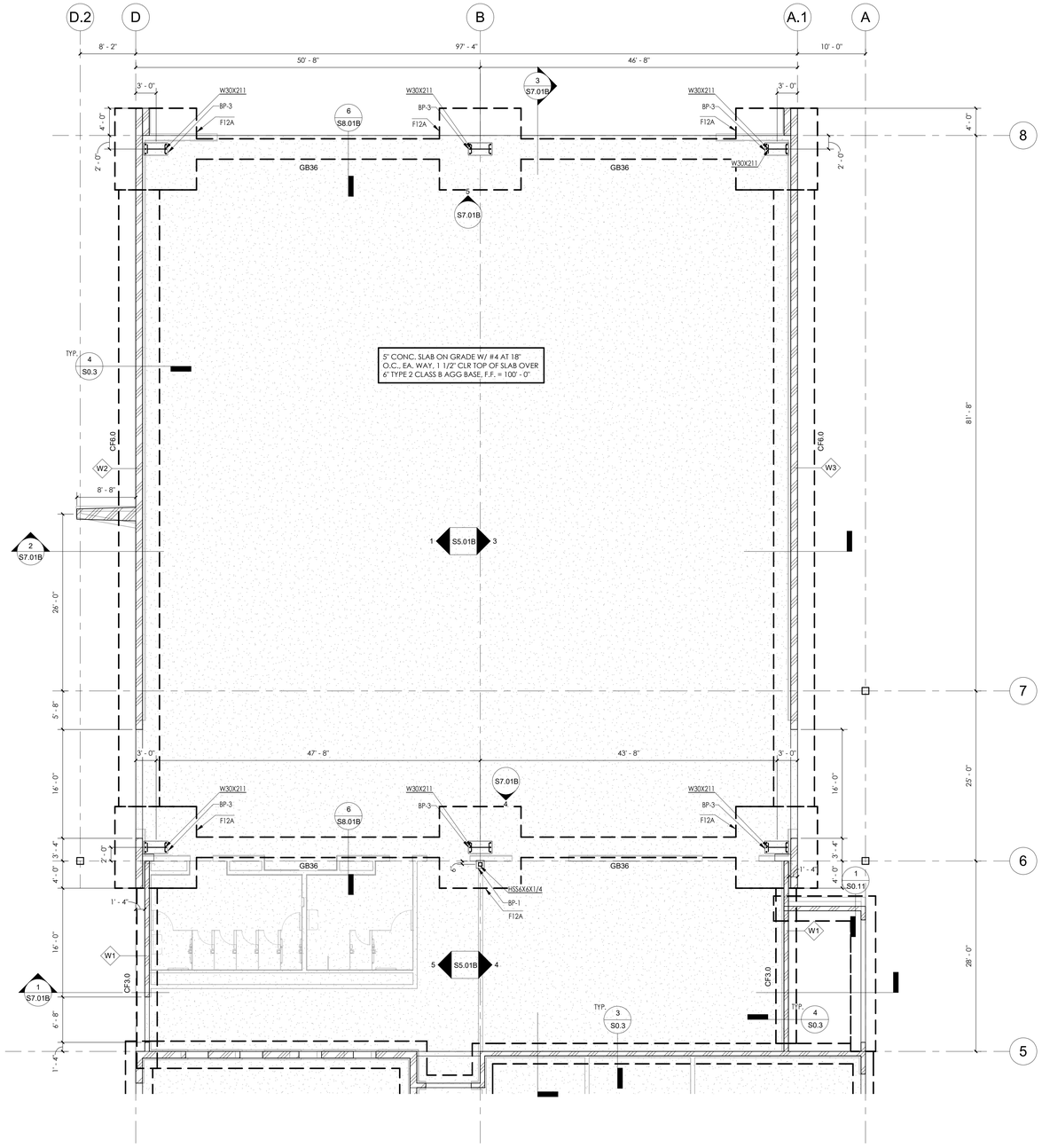

N

1 FOUNDATION PLAN - GYMNASIUM

1/8" = 1'-0"

GENERAL NOTES

1. SEE WALL ELEVATIONS FOR MORE RESTRICTIVE WALL REINFORCEMENT. VERTICAL WALL REINFORCING SHALL BE EMBEDDED IN FOUNDATIONS TO MATCH VERTICAL AND TYPICAL REINFORCING IN ELEVATIONS.
2. CONTRACTOR SHALL PROVIDE CONSTRUCTION JOINTS (C.J.) AND CONTROL JOINTS (ALTERNATE S.J. AND D.J.) FOR ALL SLABS ON GRADE IN ACCORDANCE WITH DETAILS 1 / S0.3 & 7 / S0.2, RESPECTIVELY. A DRAWING SHOWING THE PROPOSED LAYOUT OF ALL SLAB JOINTS SHALL BE SUBMITTED TO THE ARCHITECT FOR REVIEW AND APPROVAL.

KEYNOTES

LEGEND

KEYPLAN

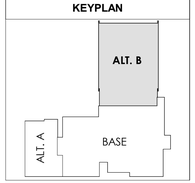

tsk
225 South Arlington Avenue
Reno NV, 89501
phone: 775.857.2949
fax: 775.857.2403
www.tska.com

NOT FOR CONSTRUCTION

THESE DRAWINGS AND SPECIFICATIONS ARE THE PROPERTY OF TATE SNYDER KIMSEY ARCHITECTS AND MAY NOT BE REPRODUCED OR USED FOR ANY PURPOSE WITHOUT THE ARCHITECTS WRITTEN CONSENT. AS INSTRUMENTS OF SERVICE, THESE DOCUMENTS ARE NOT FINAL AND READY FOR USE, AND THEREFORE NOT VALID, UNLESS THEY ARE SEALED, SIGNED AND DATED.
Copyright, Ltd 2022

Consultant

NELSON WILCOX
STRUCTURAL ENGINEERS
225 S Arlington Ave, Ste B, Reno, NV 89501
www.nelson-wilcox.com

PLEASE RECYCLE

Project
CITY OF FERNLEY CRRC

Job No: 21-058.00

Owner
CITY OF FERNLEY

Job No: 20-22

50% CONSTRUCTION DOCUMENTS

REVISIONS		
REV	DATE	DESCRIPTION

Sheet Title
ENLARGED FOUNDATION PLAN - ALT. B

Date: JANUARY 19, 2023
Sheet No:
S1.11B

ROOF FRAMING PLAN NOTES:

1. B.O. DECK= TOP OF FRAMING (BOTTOM OF DECK) ELEVATION ABOVE THE FINISHED FIRST FLOOR.
2. T.O.S.= TOP OF WIDE FLANGE GIRDER ELEVATION ABOVE THE FINISHED FIRST FLOOR.
3. SEE FOR STEEL JOIST AND JOIST GIRDER DESIGN CRITERIA.
4. SEE 3 / S0.6 & 4 / S0.6 FOR ROOF HUNG PIPING SUPPORTS.
5. FIRE SPRINKLER CONTRACTOR SHALL LAY OUT FIRE SPRINKLER LINES SO THAT NO LINE PASSES UNDER SKYLIGHT/SMOKEVENTS OR FUTURE MECHANICAL UNITS (WHERE THESE ITEMS OCCUR).
6. STEEL JOIST AND JOIST GIRDER SUPPLIER SHALL SUBMIT STRUCTURAL CALCULATIONS, SHOP, AND ERECTION DRAWINGS SEALED AND SIGNED BY A NEVADA REGISTERED CIVIL OR STRUCTURAL ENGINEER TO THE ENGINEER OF RECORD WHO AGREES TO REVIEW THESE DOCUMENTS FOR ACCEPTANCE PRIOR TO FABRICATION. STRUCTURAL CALCULATIONS, SHOP AND ERECTION DRAWINGS SHALL BE SUBMITTED TO THE BUILDING DEPARTMENT FOR ACCEPTANCE AFTER THE ENGINEER OF RECORD HAS NOTED HIS/HER ACCEPTANCE.
7. JOIST AND JOIST GIRDER DRAWINGS SHALL SHOW COMPLIANCE WITH THE STANDARD SPECIFICATIONS FOR STEEL JOISTS, K-SERIES, LH-SERIES, DLH-SERIES AND JOIST GIRDERS, 44TH EDITION, PUBLISHED BY THE STEEL JOIST INSTITUTE.
8. JOIST AND JOIST GIRDERS SHALL BE IDENTIFIED AS TO TYPE, SIZE, AND MANUFACTURER BY TAGGING OR OTHER SUITABLE MEANS AT THE TIME OF MANUFACTURE OR FABRICATION. SUCH IDENTIFICATION SHALL BE MAINTAINED CONTINUOUSLY TO THE POINT OF THEIR INSTALLATION IN A STRUCTURE.
9. SEE SHEETS S0.9 & S0.10 FOR TYPICAL INTERIOR WALL DETAILS.

GYMNASIUM METAL DECK SCHEDULE

MARK	DECK TYPE (SEE NOTE 1)	DECK SIZE	DECK ATTACHMENT ZONE	DIAPHRAGM CONNECTIONS (SEE NOTES 2, 3 AND 6)		
				LOW FLUTES		SIDE SEAMS
				PERPENDICULAR TO SUPPORT	PARALLEL TO SUPPORT	
ER3.5A	EPICORE ER3.5A	3 1/2" x 18 GA	III	PW AT 24/6 PATTERN	PW AT 12" O.C. MAX	#12 SCREWS AT 12" O.C. MAX
PLB-I	PLB-36	1 1/2" x 18 GA	I	FASTENERS AT 36/4 PATTERN	FASTENERS AT 12" O.C. MAX	VSC2 AT 24" O.C. MAX

NOTES:

1. METAL DECK SHALL BE AS SPECIFIED BY ASC, VERCO, VULCRAFT, EPIC OR APPROVED EQUAL.
2. CONNECTIONS SHALL BE PLACED IN ACCORDANCE WITH THE DECK MANUFACTURERS STANDARD PATTERN AND REQUIREMENTS.
3. PW = 3/4" PUDDLE WELD, VSC2 = VERCO PUNCHLOK II SIDELAP CONNECTION.
4. DECK SHALL BE PLACED IN EITHER A 2-SPAN OR 3-SPAN CONDITION. SINGLE DECK SPANS WILL NOT BE ALLOWED UNLESS SPECIFICALLY NOTED.
5. REFER TO DECK ATTACHMENT DIAGRAM FOR DECK ATTACHMENT ZONE.
6. FASTENERS SHALL BE #12 SCREWS FOR SUPPORT STEEL THICKNESS LESS THAN 1/8". FASTENERS SHALL BE HILTI HSN-24 FOR SUPPORT STEEL THICKNESS 1/8" TO 3/8". FASTENERS SHALL BE HILTI X-ENP-19 FOR SUPPORT STEEL THICKNESS GREATER THAN 1/4". FOR SUPPORT STEEL THICKNESS BETWEEN 1/4" AND 3/8" (INCLUSIVE), HILTI HSN-24 OR X-ENP-19 FASTENERS MAY BE USED AT CONTRACTOR'S OPTION.

GYMNASIUM JOIST BEARING PLATE SCHEDULE

MARK	PLATE	ANCHOR	WALL ANCHORAGE LOAD (0.6W OR 0.7E)
P4	8" CMU: 3/4" x 5 1/2" x 1' - 3" 12" CMU: 3/4" x 9" x 1' - 3"	(4) 3/4" x 6" NSA AT 4" O.C.	8" CMU: 4.8 KIPS 12" CMU: 8.0 KIPS
P12	SEE DETAIL 1 / S8.01B	(12) 1" x 8" NSA AT 4" O.C.	12" CMU: 26.0 KIPS

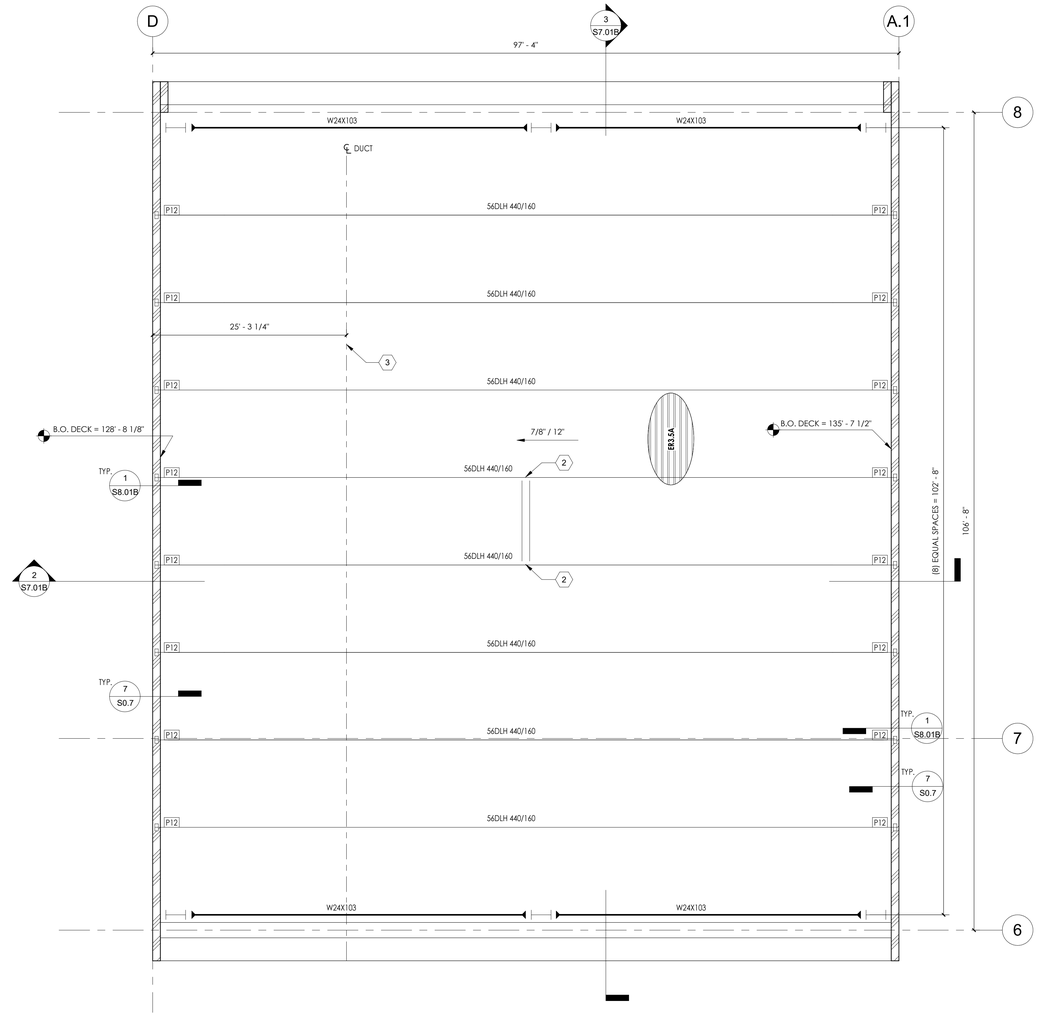

1 GYMNASIUM - HIGH ROOF FRAMING PLAN

1/8" = 1'-0"

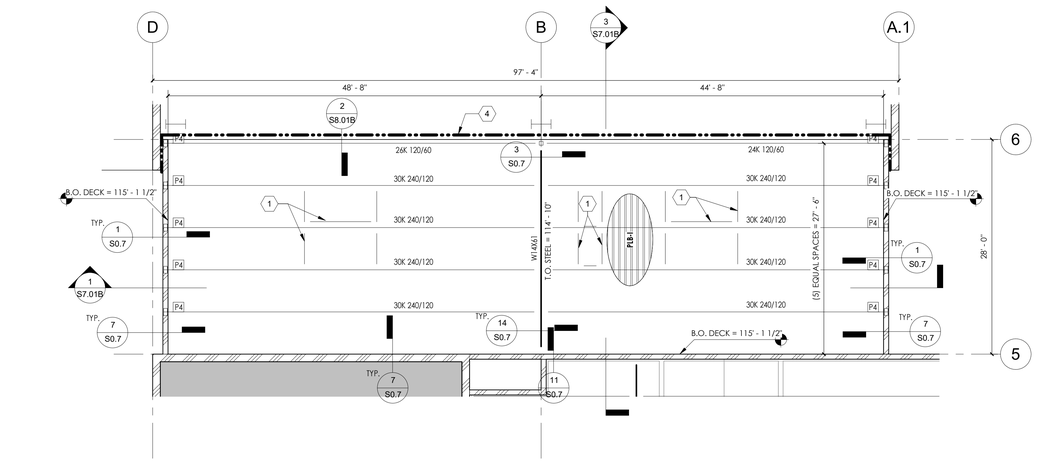

2 GYMNASIUM - LOW ROOF FRAMING PLAN

1/8" = 1'-0"

GENERAL NOTES

KEYNOTES

1. W8x10 FRAMING UNDER RTU, COORDINATE LOCATIONS WITH MECH. AND APPROVED CURB SUBMITTAL. REFER TO DETAILS 7/S0.6, 12/S0.6, AND 1/S0.5.
2. FAN MOUNT LOCATION REFER TO DETAIL 10/S0.6.
3. 30" DIA. DUCT THRU JOIT. VERIFY SIZE ADN LOCATION WITH MECH. DRAWINGS.
4. 2" SEISMIC JOINT

LEGEND

P# JOIST BEARING PLATE PER SCHED.

KEYPLAN

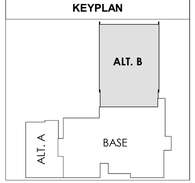

tsk
225 South Arlington Avenue
Reno NV, 89501
phone: 775.857.2949
fax: 775.857.2403
www.tska.com

NOT FOR CONSTRUCTION

THESE DRAWINGS AND SPECIFICATIONS ARE THE PROPERTY OF TATE SNYDER KIMSEY ARCHITECTS AND MAY NOT BE REPRODUCED OR USED FOR ANY PURPOSE WITHOUT THE ARCHITECTS WRITTEN CONSENT. AS INSTRUMENTS OF SERVICE, THESE DOCUMENTS ARE NOT FINAL AND READY FOR USE, AND THEREFORE NOT VALID, UNLESS THEY ARE SEALED, SIGNED AND DATED.
Copyright, Ltd 2022

Consultant

NELSON WILCOX
STRUCTURAL ENGINEERS
225 S Arlington Ave, Ste B, Reno, NV 89501
www.nelson-wilcox.com

PLEASE RECYCLE

Project
CITY OF FERNLEY CRRC

Job No: 21-058.00

Owner
CITY OF FERNLEY

Job No: 20-22

50% CONSTRUCTION DOCUMENTS

REVISIONS		
REV	DATE	DESCRIPTION

Sheet Title
ROOF FRAMING PLAN - ALT. B

Date: JANUARY 19, 2023
Sheet No:
S4.01B

ALT. B TYP. JOIST DESIGN CRITERIA

1. JOISTS AND JOIST GIRDERS SHALL BE DESIGNED BY THE JOIST MANUFACTURER IN ACCORDANCE WITH THE STEEL JOIST INSTITUTE (SJI) AND THE 2018 IBC. THE JOIST DESIGNATIONS INDICATED IN THE CONSTRUCTION DOCUMENTS SHALL BE CONSIDERED MINIMUMS. FINAL DESIGN AND DESIGNATION SHALL BE BY THE JOIST MANUFACTURER, BASED ON THE LOADING CRITERIA PRESENTED IN THE CONSTRUCTION DOCUMENTS, AND BE OF THE DEPTHS SHOWN ON THE DRAWINGS.
2. IN ADDITION TO THE LOADS INDICATED, JOISTS AND JOIST GIRDERS SHALL BE DESIGNED FOR ALL SPECIAL LOADS INDICATED ON THE PLANS AND DETAILS, INCLUDING THE MECHANICAL LOADS IDENTIFIED ON THE PLANS.
3. DEFLECTIONS OF ALL MEMBERS SHALL BE LIMITED TO L/360 FOR LIVE LOADS AND L/240 FOR TOTAL LOADS, U.N.O.
4. PROVIDE SJI STANDARD CAMBER U.N.O.
5. PROVIDE ALL REQUIRED BRIDGING FOR THE SPANS AND LOADING SHOWN WHETHER INDICATED ON PLANS OR NOT. WHERE INDICATED ON PLANS, LINES OF BRIDGING ARE APPROXIMATE AND SHALL BE ADJUSTED AS NECESSARY BY THE JOIST MANUFACTURER FOR THEIR FINAL DESIGN. THE CONTRACTOR AND JOIST MANUFACTURER SHALL COORDINATE THE LOCATIONS OF BRIDGING WITH MECHANICAL DUCTS, PIPING, OR OTHER ITEMS TO AVOID CONFLICTS. USE X-BRIDGING OR DIAGONAL BRACING AS REQUIRED AT LOCATIONS WHERE LINES OF BRIDGING MUST BE INTERRUPTED BECAUSE OF MECHANICAL DUCTWORK OR OTHER OBSTRUCTIONS. SEE TYPICAL BRIDGING DETAILS.
6. ALL JOISTS SHALL HAVE SEAT DEPTHS (SLOPING WHERE REQUIRED) AND TOP CHORD EXTENSIONS AS INDICATED IN PLANS AND DETAILS.
7. REINFORCE JOISTS PER TYPICAL DETAILS WHERE CONCENTRATED LOADS ARE APPLIED TO JOIST CHORDS FURTHER THAN 6" AWAY FROM PANEL POINTS.
8. JOISTS SHALL BE DESIGNED WITH CLEARANCES AS REQUIRED WHERE DUCTWORK PASSES THROUGH WEB SPACE. THE CONTRACTOR SHALL BE RESPONSIBLE FOR THE FINAL LAYOUT OF THESE DUCTS AND FOR COMMUNICATING THESE REQUIREMENTS TO THE JOIST MANUFACTURER.
9. ALL "LH" AND "X" SERIES JOISTS SHALL BE PROVIDED WITH EITHER 6" OR 3 1/2" HIGH BEARING SEAT AS SHOWN ON THE STRUCTURAL DETAILS.
10. JOISTS SHALL BE DESIGNED FOR THE FOLLOWING LOADS:

LOAD CASE	LOAD
DEAD LOAD	20 PSF AT 1 1/2" DECK 22 PSF AT 3 1/2" DECK
ROOF LIVE LOAD	20 PSF
ROOF SNOW LOAD	9 PSF
WIND UPLIFT (ALLOWABLE)	SEE UPLIFT DIAGRAM
TOP CHORD AND JOIST SEAT AXIAL LOAD (0.6W OR 0.7E WALL ANCHORAGE)	SEE JOIST BEARING SEAT SCHEDULE
JOIST ADD LIVE LOAD ANYWHERE ALONG TOP OR BOTTOM CHORDS (ALL JOISTS AT OR BETWEEN PANEL POINTS)	500 LBS, U.N.O.

ADD LOADS

LOAD CASE	D (DOWN)	0.6W (UP)	0.6W (DOWN)	0.7E (UP OR DOWN)
LC1				
LC2				
LC3				
LC4				
LC5				
LC6				
LC7				
LC8				
LC9				
LC10				
LC11				
LC12				
LC13				
LC14				
LC15				
LC16				

NOTE:
1. SEE DETAILS 14 / S0.6 & 16 / S0.6 FOR MOMENT FRAME BEAM BRACING TO JOISTS AND ROOF FRAMING PLAN FOR BRACE LOCATIONS.

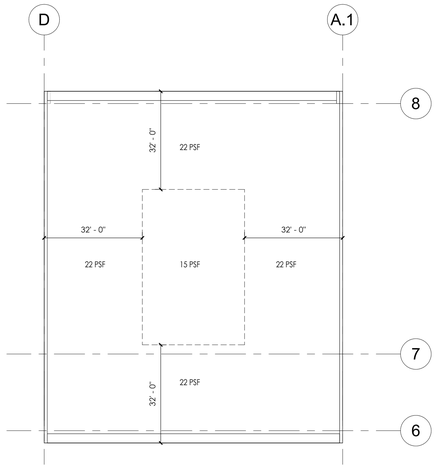

3 GYMNASIUM - HIGH ROOF WIND UPLIFT DIAGRAM (0.6W)
1" = 20'-0"

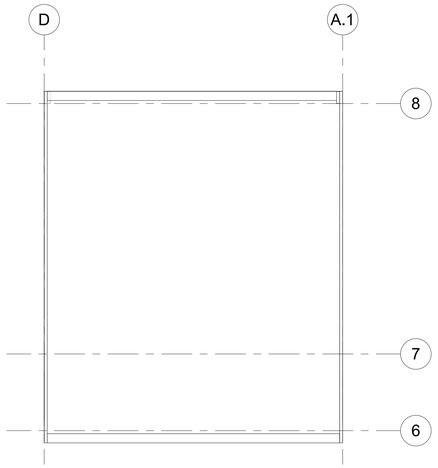

4 GYMNASIUM - HIGH ROOF ATTACHMENT ZONE DIAGRAM
1" = 20'-0"

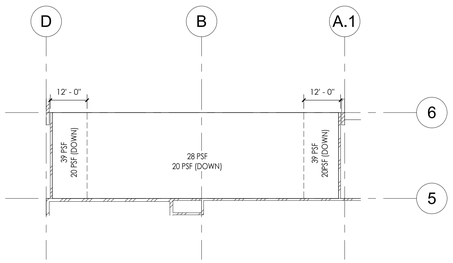

5 GYMNASIUM - LOW ROOF WIND UPLIFT DIAGRAM (0.6W)
1" = 20'-0"

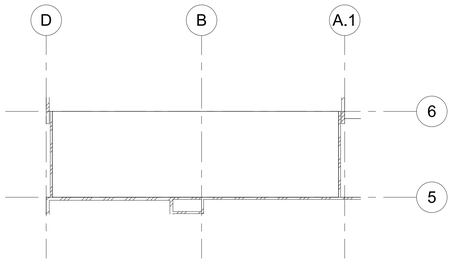

6 GYMNASIUM - LOW ROOF ATTACHMENT ZONE DIAGRAM
1" = 20'-0"

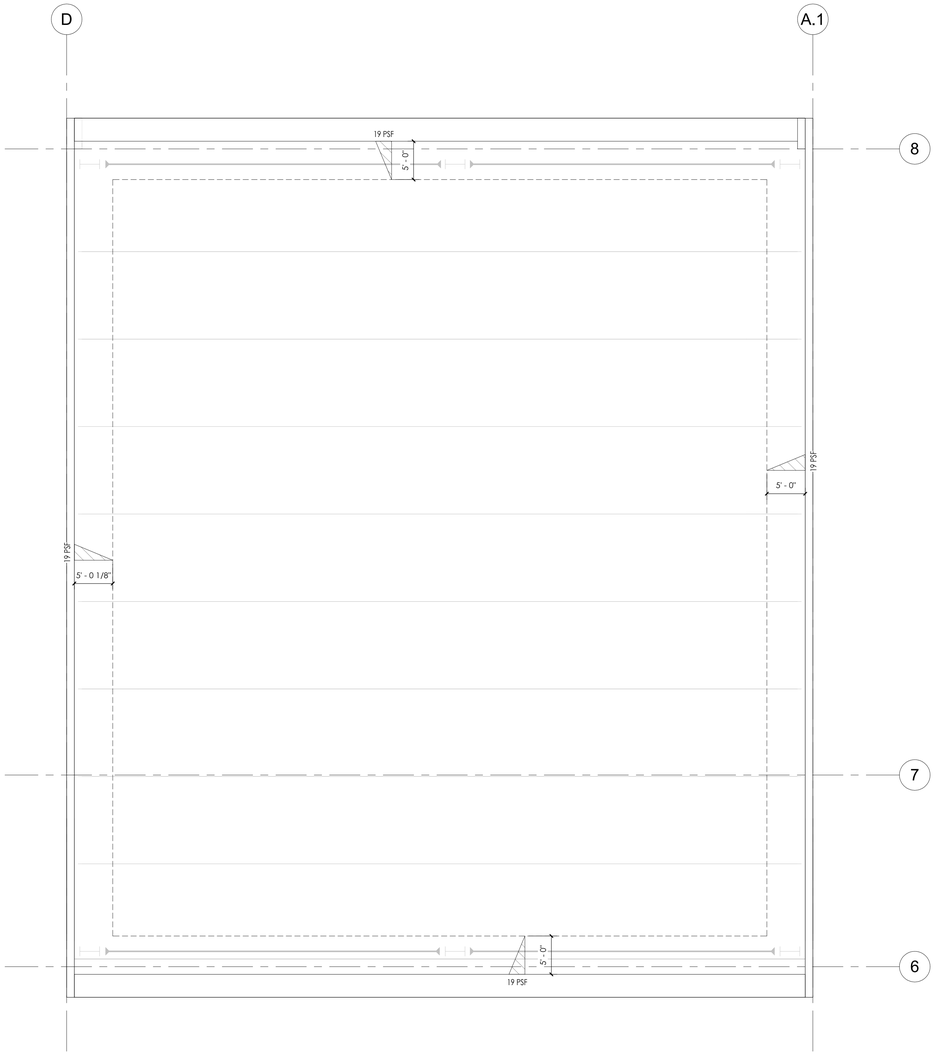

1 GYMNASIUM - HIGH ROOF JOIST LOADING PLAN
1/8" = 1'-0"

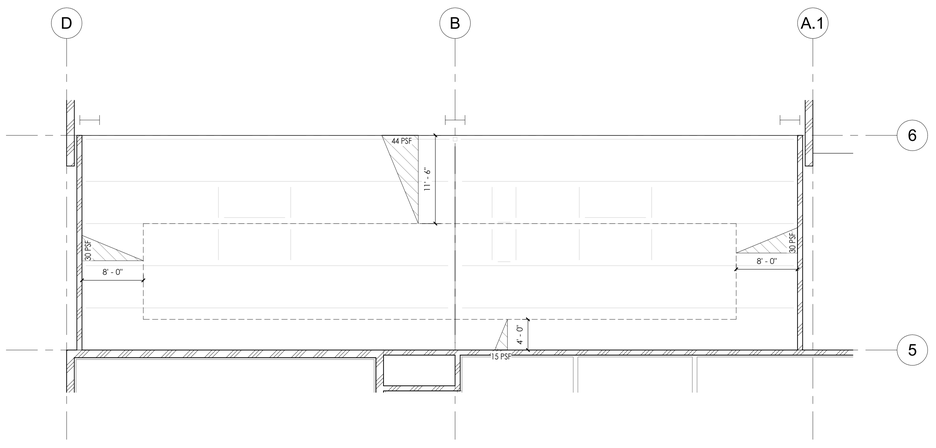

2 GYMNASIUM - LOW ROOF JOIST LOADING PLAN
1/8" = 1'-0"

GENERAL NOTES

KEYNOTES

LEGEND

- MECHANICAL EQUIPMENT, SEE MECH.
- ROOF DECK OPENING, REINFORCE PER DETAIL 9 / S0.6 .COORDINATE WITH MECHANICAL
- LC# — JOIST POINT ADD LOADS PER ADD LOADS SCHEDULE
- LC# — JOIST DISTRIBUTED ADD LOADS PER ADD LOADS SCHED.

SNOW LOADING LEGEND

- UNIFORM SNOW LOAD = 23 PSF
- TAPERED SNOW DRIFT LOADS PER PLAN
- DRIFT LOAD
- UNIFORM SNOW LOAD = 9 PSF
- DRIFT LENGTH

KEYPLAN

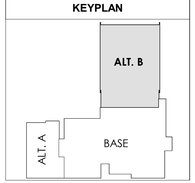

tsk
225 South Arlington Avenue
Reno NV, 89501
phone: 775.857.2949
fax: 775.857.2403
www.tska.com

NOT FOR CONSTRUCTION

THESE DRAWINGS AND SPECIFICATIONS ARE THE PROPERTY OF TATE SNYDER KIMSEY ARCHITECTS AND MAY NOT BE REPRODUCED OR USED FOR ANY PURPOSE WITHOUT THE ARCHITECTS WRITTEN CONSENT. AS INSTRUMENTS OF SERVICE, THESE DOCUMENTS ARE NOT FINAL AND READY FOR USE, AND THEREFORE NOT VALID, UNLESS THEY ARE SEALED, SIGNED AND DATED.
Copyright, Ltd 2022

Consultant

NELSON WILCOX
STRUCTURAL ENGINEERS
225 S Arlington Ave, Ste B, Reno, NV 89501
www.nelson-wilcox.com

PLEASE RECYCLE

Project
CITY OF FERNLEY CRRC

Job No: 21-058.00

Owner
CITY OF FERNLEY

Job No: 20-22

50% CONSTRUCTION DOCUMENTS

REVISIONS		
REV	DATE	DESCRIPTION

Sheet Title
JOIST LOADING PLANS - ALT. B

Date: JANUARY 19, 2023
Sheet No:
S4.02B

NOTE:

1. WALL OPENINGS LESS THAN 12" IN WIDTH AND/OR HEIGHT NEED NO SPECIAL REINFORCING AND THEREFORE ARE NOT SHOWN FOR CLARITY.
2. COORDINATE ALL MECH./PLUMBING OPENINGS WITH MECH.
3. CONTRACTOR SHALL PROVIDE VERTICAL CONTROL JOINTS (C.J.) IN MASONRY WALLS IN ACCORDANCE WITH DETAIL 5 / S0.3 AT LOCATIONS SHOWN ON ELEVATIONS.
4. ADDITIONAL HORIZONTAL REINFORCEMENT AT CMU PIERS TO EXTEND 32" ABOVE AND BELOW THE ADJACENT WINDOW OPENING(S) AND 32" ABOVE THE ADJACENT DOOR OPENINGS.
5. WHERE THE LENGTH OF A WALL PIER BETWEEN OPENINGS IS LESS THAN 3X THE NOMINAL THICKNESS, THE LINTEL REINFORCING SHALL BE CONTINUOUS OVER THE WALL PIER.

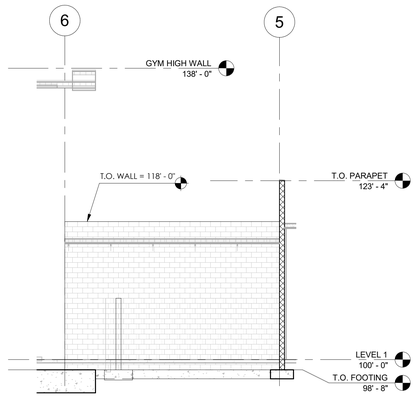

4 WALL ELEVATION - STORAGE (LOOKING EAST)

1/8" = 1'-0"

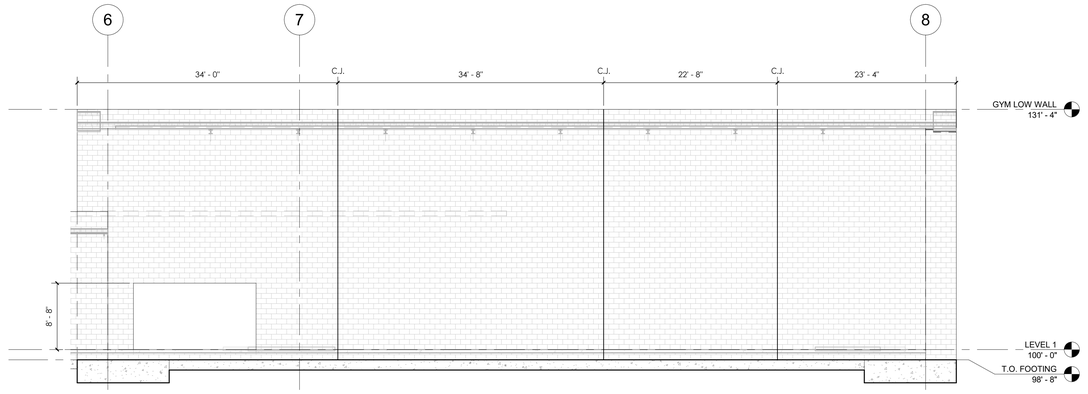

1 WALL ELEVATION - GRID D (LOOKING WEST)

1/8" = 1'-0"

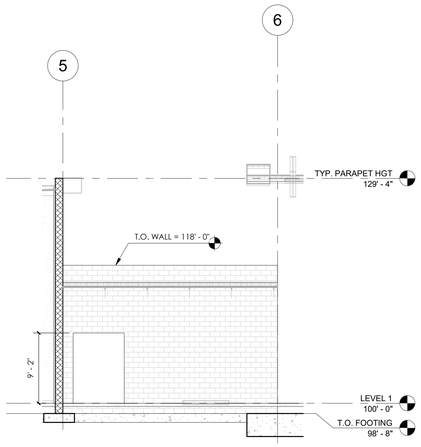

5 WALL ELEVATION - STORAGE (LOOKING WEST)

1/8" = 1'-0"

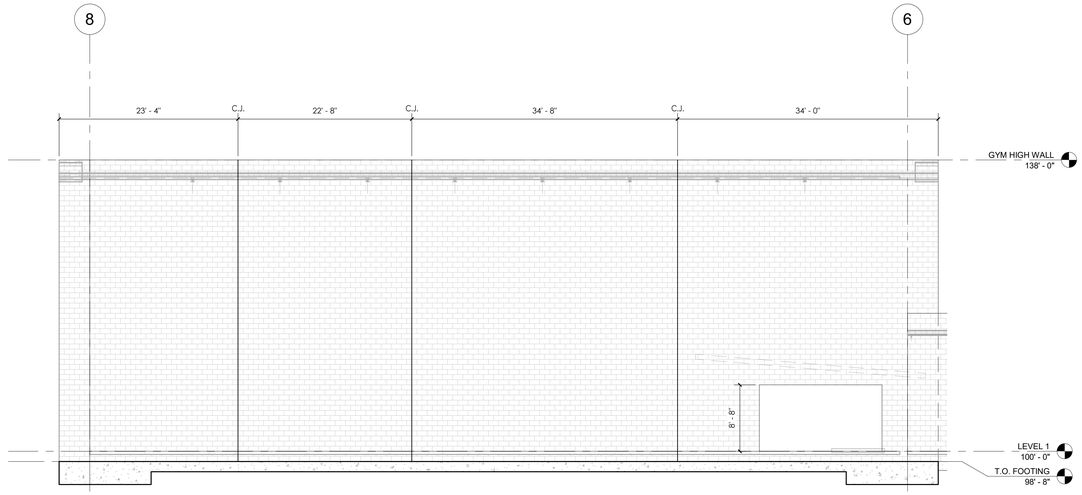

3 WALL ELEVATION - GRID A.1 (LOOKING EAST)

1/8" = 1'-0"

tsk
225 South Arlington Avenue
Reno NV, 89501
phone: 775.857.2949
fax: 775.857.2403
www.tska.com

NOT FOR CONSTRUCTION

THESE DRAWINGS AND SPECIFICATIONS ARE THE PROPERTY OF TATE SNYDER KIMSEY ARCHITECTS AND MAY NOT BE REPRODUCED OR USED FOR ANY PURPOSE WITHOUT THE ARCHITECTS WRITTEN CONSENT. AS INSTRUMENTS OF SERVICE, THESE DOCUMENTS ARE NOT FINAL AND READY FOR USE, AND THEREFORE NOT VALID, UNLESS THEY ARE SEALED, SIGNED AND DATED.

Copyright, Ltd 2022

Consultant

NELSON WILCOX
STRUCTURAL ENGINEERS
225 S Arlington Ave, Ste B, Reno, NV 89501
www.nelson-wilcox.com

PLEASE RECYCLE

Project
CITY OF FERNLEY CRRC

Job No: 21-058.00

Owner
CITY OF FERNLEY

Job No: 20-22

50% CONSTRUCTION DOCUMENTS

REVISIONS		
REV	DATE	DESCRIPTION

Sheet Title
WALL ELEVATIONS - ALT. B

Date: JANUARY 19, 2023
Sheet No:
S5.01B

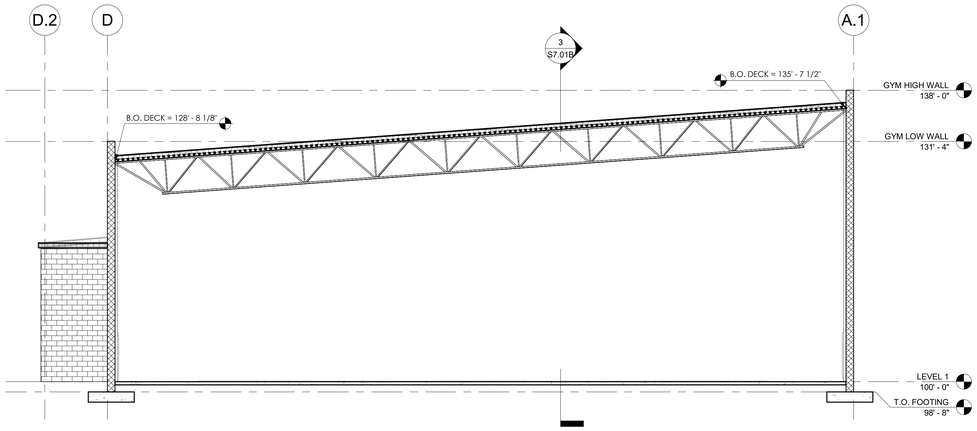

2 GYMNASIUM - STRUCTURAL SECTION 2

1/8" = 1'-0"

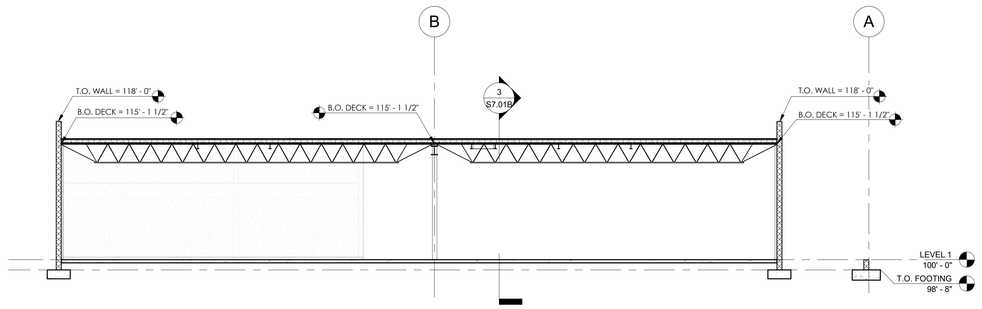

1 GYMNASIUM - STRUCTURAL SECTION 1

1/8" = 1'-0"

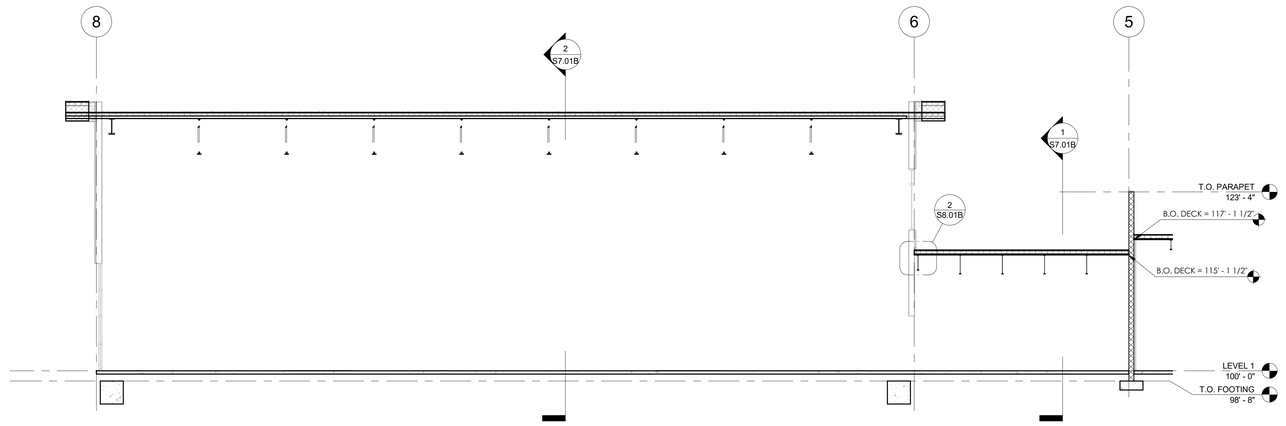

3 GYMNASIUM - STRUCTURAL SECTION 3

1/8" = 1'-0"

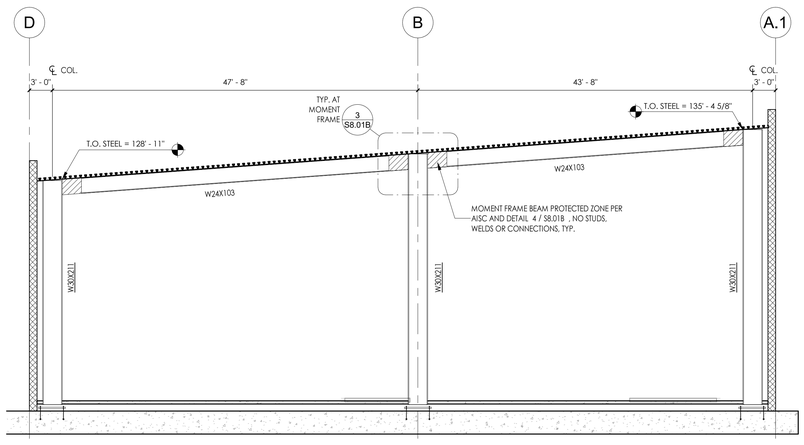

5 GYM FRAME ELEVATION - GRID 8

1/8" = 1'-0"

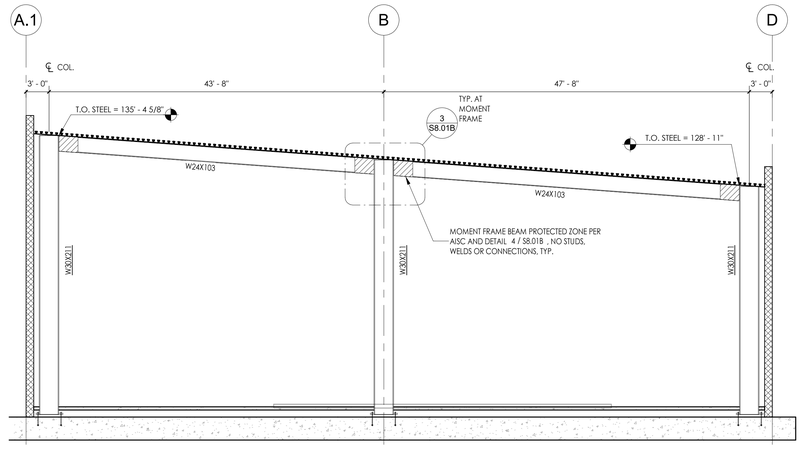

4 MOMENT FRAME ELEVATION - GRID 6

1/8" = 1'-0"

GENERAL NOTES

KEYNOTES

LEGEND

KEYPLAN

tsk
225 South Arlington Avenue
Reno NV, 89501
phone: 775.857.2949
fax: 775.857.2403
www.tska.com

NOT FOR CONSTRUCTION

THESE DRAWINGS AND SPECIFICATIONS ARE THE PROPERTY OF TATE SNYDER KIMSEY ARCHITECTS AND MAY NOT BE REPRODUCED OR USED FOR ANY PURPOSE WITHOUT THE ARCHITECTS WRITTEN CONSENT. AS INSTRUMENTS OF SERVICE, THESE DOCUMENTS ARE NOT FINAL AND READY FOR USE, AND THEREFORE NOT VALID, UNLESS THEY ARE SEALED, SIGNED AND DATED.

Copyright, Ltd 2022

Consultant

NELSON WILCOX
STRUCTURAL ENGINEERS
225 S Arlington Ave, Ste B, Reno, NV 89501
www.nelson-wilcox.com

PLEASE RECYCLE

Project
CITY OF FERNLEY
CRRC

Job No: 21-058.00

Owner
CITY OF FERNLEY

Job No: 20-22

50% CONSTRUCTION DOCUMENTS

REVISIONS		
REV	DATE	DESCRIPTION

Sheet Title
STRUCTURAL SECTIONS - ALT. B

Date: JANUARY 19, 2023
Sheet No:
S7.01B

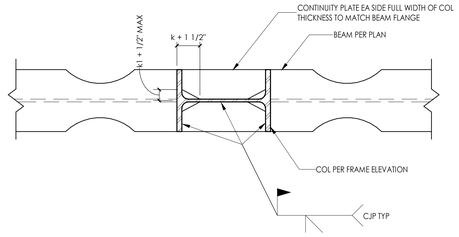

5 MOMENT FRAME DETAIL

1 1/2" = 1'-0"

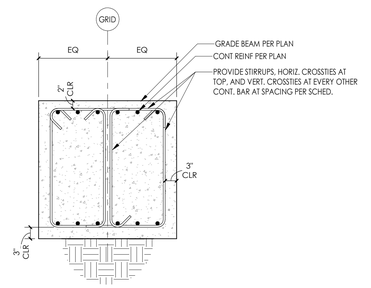

6 GRADE BEAM SECTION

3/4" = 1'-0"

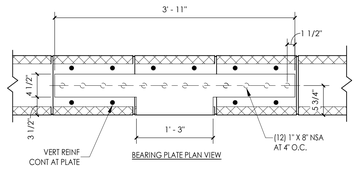

BEARING PLATE PLAN VIEW

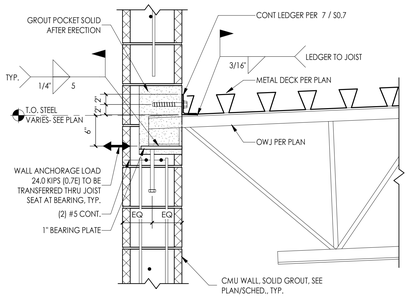

1 P12 POCKETED JOIST IN CMU

1" = 1'-0"

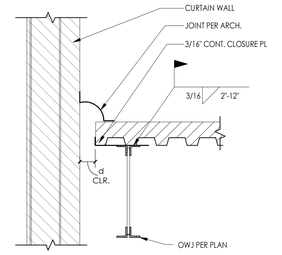

NOTE:
d = SEISMIC JOINT WIDTH PER PLAN

2 SEISMIC JOINT AT CURTAIN WALL

1" = 1'-0"

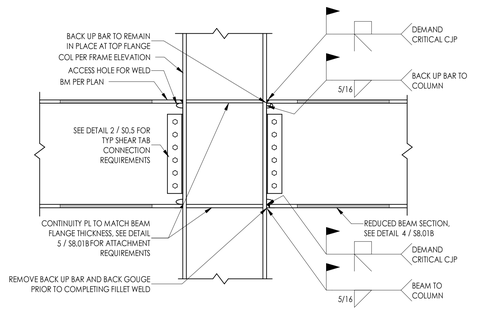

3 MOMENT FRAME DETAIL

1" = 1'-0"

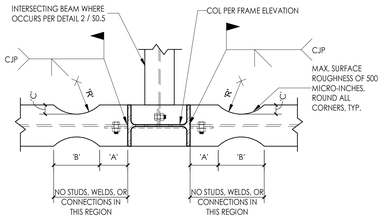

BEAM SIZE	A	B	C	R
W24X103	4 5/8"	20"	1 15/16"	26 3/4"

NOTES:
1. SHEAR TAB SERVES AS BACKING FOR CJP WELD OF BEAM TO COLUMN.

4 MOMENT FRAME DETAIL

1" = 1'-0"

tsk
225 South Arlington Avenue
Reno NV, 89501
phone: 775.857.2949
fax: 775.857.2403
www.tska.com

NOT FOR CONSTRUCTION

THESE DRAWINGS AND SPECIFICATIONS ARE THE PROPERTY OF TATE SNYDER KIMSEY ARCHITECTS AND MAY NOT BE REPRODUCED OR USED FOR ANY PURPOSE WITHOUT THE ARCHITECTS WRITTEN CONSENT. AS INSTRUMENTS OF SERVICE, THESE DOCUMENTS ARE NOT FINAL AND READY FOR USE, AND THEREFORE NOT VALID, UNLESS THEY ARE SEALED, SIGNED AND DATED.

Copyright, Ltd 2022

Consultant

NELSON WILCOX
STRUCTURAL ENGINEERS
225 S Arlington Ave, Ste B, Reno, NV 89501
www.nelson-wilcox.com

PLEASE RECYCLE

Project

CITY OF FERNLEY CRRC

Job No: 21-058.00

Owner

CITY OF FERNLEY

Job No: 20-22

50% CONSTRUCTION DOCUMENTS

REVISIONS		
REV	DATE	DESCRIPTION

Sheet Title

STRUCTURAL DETAILS - ALT. B

Date: JANUARY 19, 2023

Sheet No:

S8.01B

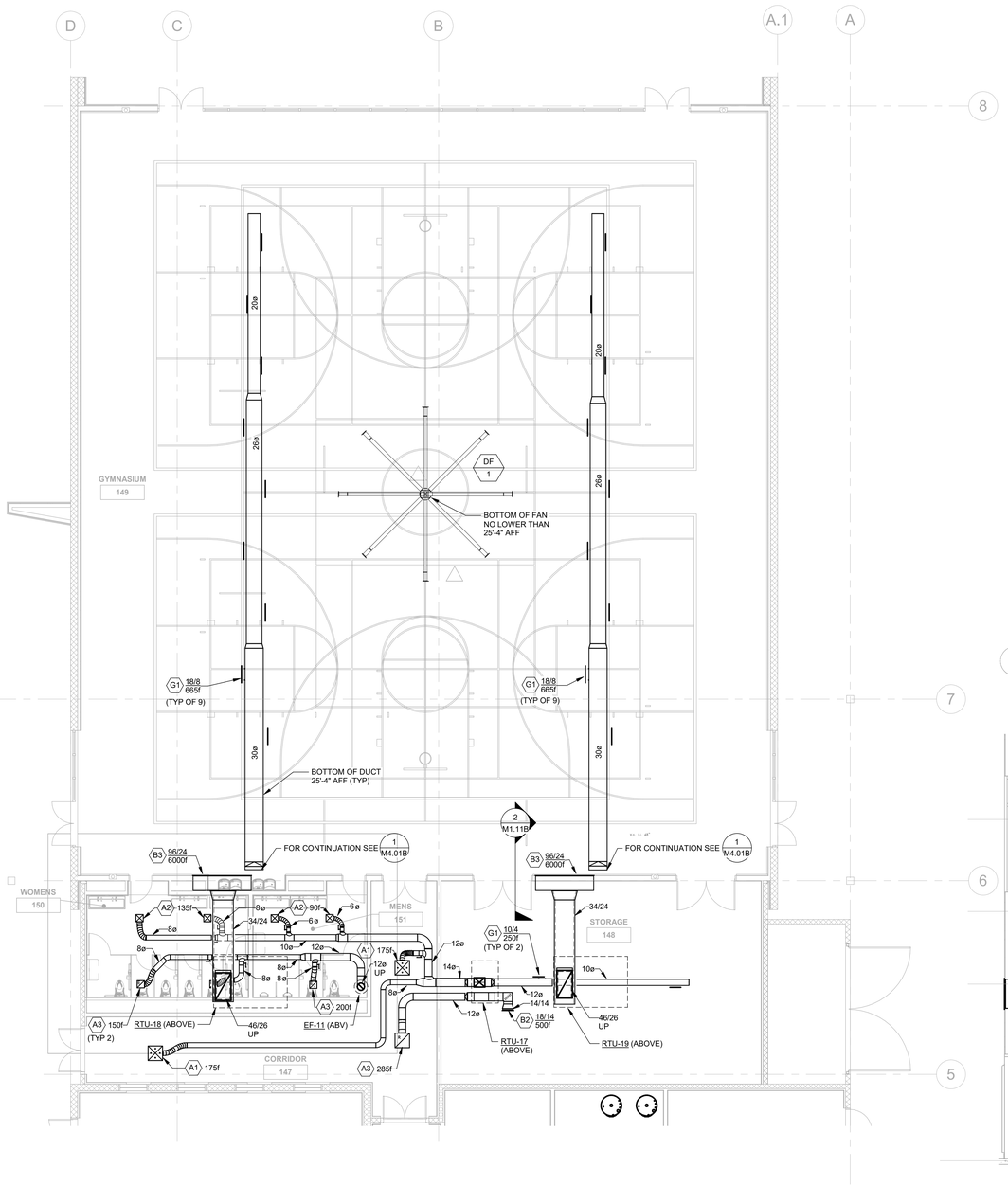

MECHANICAL PARTIAL FLOOR PLAN - ALT. B 1 M1.11B

SCALE: 1/8" = 1'-0"

N

GYM RETURN AIR TO LOUVER SECTION 2 M1.11B

SCALE: 1/4" = 1'-0"

tsk

225 South Arlington Avenue
Reno NV, 89501
phone: 775.857.2949
fax: 775.857.2403
www.tska.com

THESE DRAWINGS AND SPECIFICATIONS ARE THE PROPERTY OF TATE SNYDER KIMSEY ARCHITECTS AND MAY NOT BE REPRODUCED OR USED FOR ANY PURPOSE WITHOUT THE ARCHITECTS WRITTEN CONSENT.
AS INSTRUMENTS OF SERVICE, THESE DOCUMENTS ARE NOT FINAL AND READY FOR USE, AND THEREFORE NOT VALID, UNLESS THEY ARE SEALED, SIGNED AND DATED.

Copyright, Ltd 2023

Consultant

AINSWORTH ASSOCIATES
MECHANICAL ENGINEERS
1420 HOLCOMB AVE., SUITE 201
RENO, NV 89502
TEL: 775-329-9100
4557 GREENVIEW DR.
EL DORADO HILLS, CA 95762
TEL: 916-737-6014
www.aa-me.com

JOB 2021-065

PLEASE RECYCLE

Project

CITY OF FERNLEY CRRC

Job No: 21-058.00

Owner

CITY OF FERNLEY

PROGRESS
NOT FOR CONSTRUCTION

50% CONSTRUCTION DOCUMENTS

REVISIONS		
REV	DATE	DESCRIPTION

Sheet Title

MECHANICAL PARTIAL FLOOR PLAN - ALT. B

Date: MARCH 21, 2023

Sheet No:

M1.11B

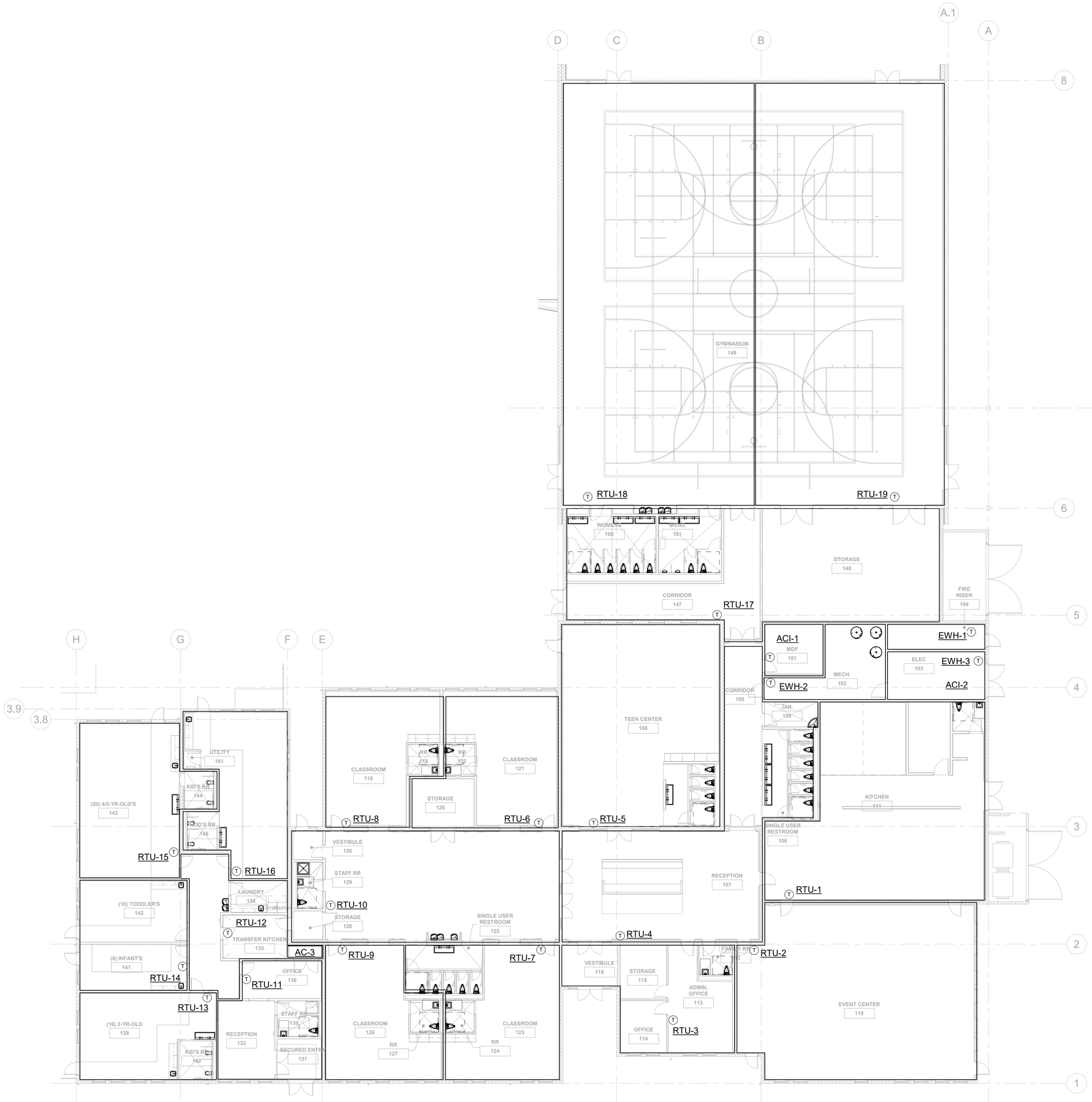

MECHANICAL PARTIAL ZONING PLAN - ALT. B

SCALE: 1" = 10'-0"

1 / M2.3

N

tsk
225 South Arlington Avenue
Reno NV, 89501
phone: 775.857.2949
fax: 775.857.2403
www.tska.com

THESE DRAWINGS AND SPECIFICATIONS ARE THE PROPERTY OF TATE SNYDER KIMSEY ARCHITECTS AND MAY NOT BE REPRODUCED OR USED FOR ANY PURPOSE WITHOUT THE ARCHITECTS WRITTEN CONSENT.
AS INSTRUMENTS OF SERVICE, THESE DOCUMENTS ARE NOT FINAL AND READY FOR USE, AND THEREFORE NOT VALID, UNLESS THEY ARE SEALED, SIGNED AND DATED.

Copyright, Ltd 2023

Consultant

AINSWORTH ASSOCIATES
MECHANICAL ENGINEERS
1420 HOLCOMB AVE., SUITE 201
RENO, NV 89502
TEL: 775-329-9100
4557 GREENVIEW DR.
EL DORADO HILLS, CA 95762
TEL: 916-737-6014
www.aa-me.com

JOB 2021-065

PLEASE RECYCLE

Project

CITY OF FERNLEY CRRC

Job No: 21-058.00

Owner

CITY OF FERNLEY

PROGRESS
NOT FOR CONSTRUCTION

50% CONSTRUCTION DOCUMENTS

REVISIONS		
REV	DATE	DESCRIPTION

Sheet Title

MECHANICAL PARTIAL ZONING PLAN - ALT. B

Date: MARCH 21, 2023

Sheet No:

M2.3

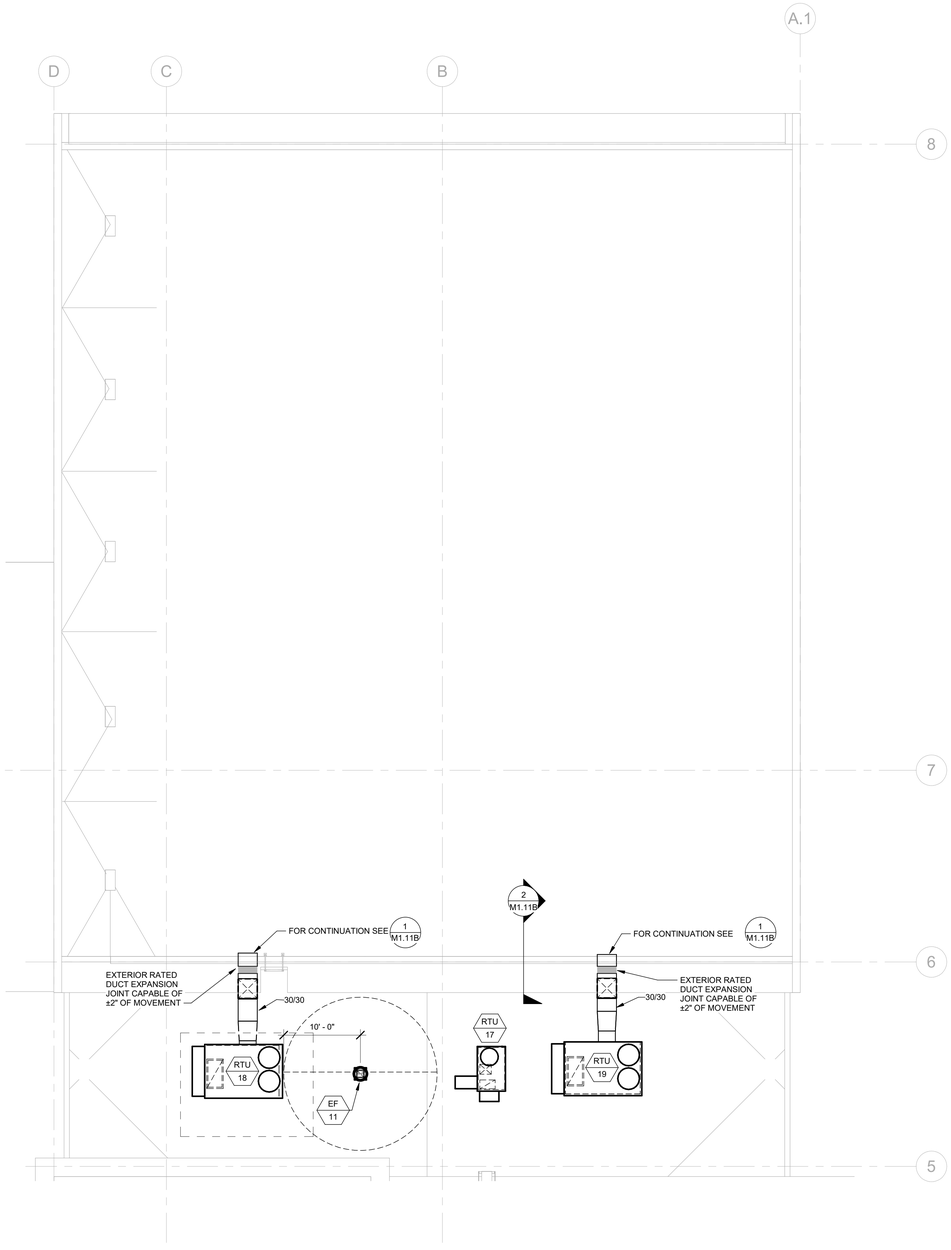

MECHANICAL PARTIAL ROOF PLAN - ALT. B 1 M4.01B

SCALE: 1/8" = 1'-0"

N

tsk

225 South Arlington Avenue
Reno NV, 89501
phone: 775.857.2949
fax: 775.857.2403
www.tska.com

THESE DRAWINGS AND SPECIFICATIONS ARE THE PROPERTY OF TATE SNYDER KIMSEY ARCHITECTS AND MAY NOT BE REPRODUCED OR USED FOR ANY PURPOSE WITHOUT THE ARCHITECTS WRITTEN CONSENT.
AS INSTRUMENTS OF SERVICE, THESE DOCUMENTS ARE NOT FINAL AND READY FOR USE, AND THEREFORE NOT VALID, UNLESS THEY ARE SEALED, SIGNED AND DATED.

Copyright, Ltd 2023

Consultant

AINSWORTH ASSOCIATES
MECHANICAL ENGINEERS
1420 HOLCOMB AVE., SUITE 201
RENO, NV 89502
TEL: 775-329-9100
4557 GREENVIEW DR.
EL DORADO HILLS, CA 95762
TEL: 916-737-6014
www.aa-me.com

JOB 2021-065

PLEASE RECYCLE

Project

CITY OF FERNLEY CRRC

Job No: 21-058.00

Owner

CITY OF FERNLEY

PROGRESS
NOT FOR CONSTRUCTION

50% CONSTRUCTION DOCUMENTS

REVISIONS		
REV	DATE	DESCRIPTION

Sheet Title

MECHANICAL PARTIAL ROOF PLAN - ALT. B

Date: MARCH 21, 2023

Sheet No:

M4.01B

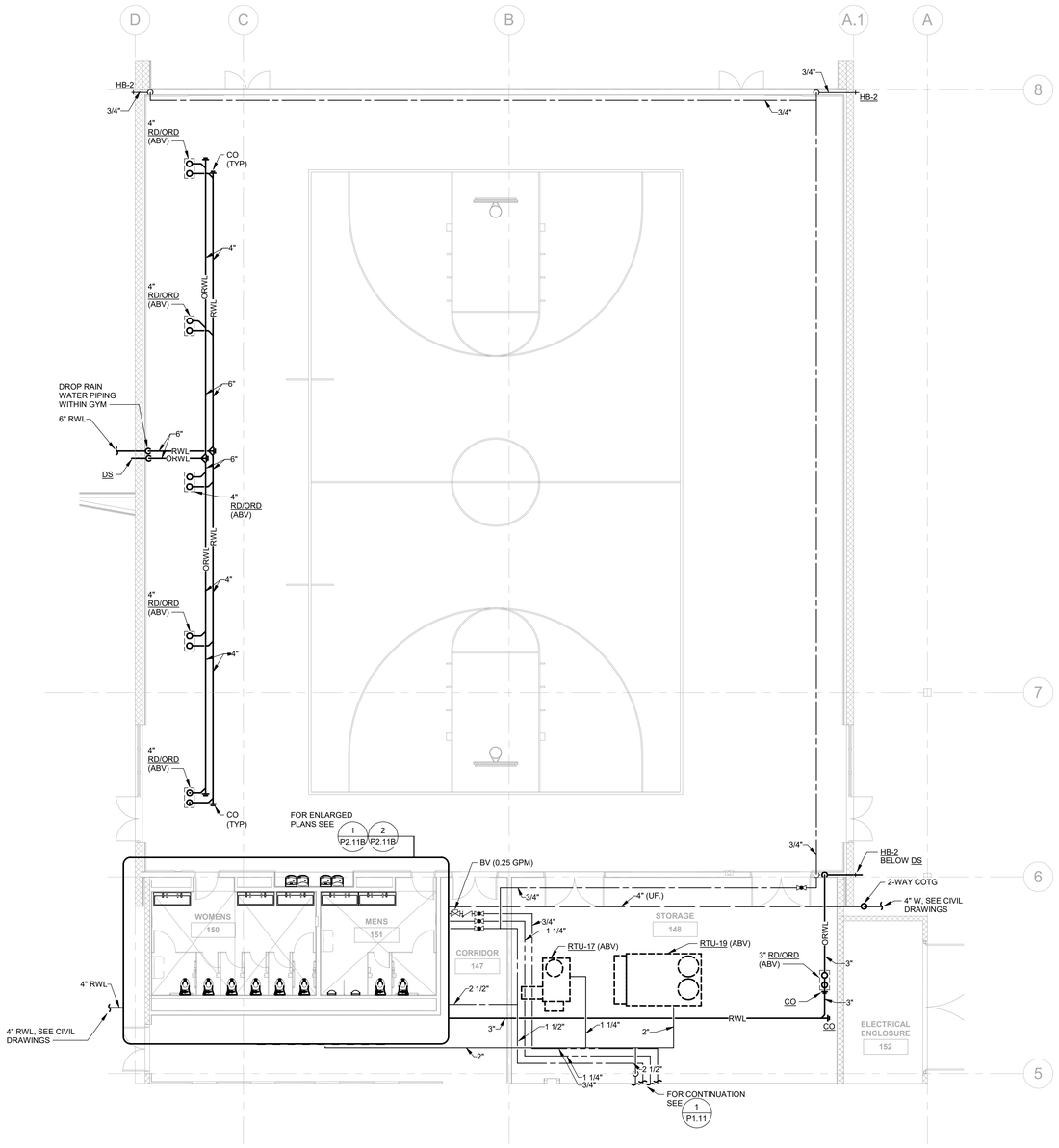

PLUMBING PARTIAL FLOOR PLAN - ALT. B

SCALE: 1/8" = 1'-0"

1 P1.11B

N

tsk

225 South Arlington Avenue
Reno NV, 89501
phone: 775.857.2949
fax: 775.857.2403
www.tska.com

THESE DRAWINGS AND SPECIFICATIONS ARE THE PROPERTY OF TATE SNYDER KIMSEY ARCHITECTS AND MAY NOT BE REPRODUCED OR USED FOR ANY PURPOSE WITHOUT THE ARCHITECTS WRITTEN CONSENT. AS INSTRUMENTS OF SERVICE, THESE DOCUMENTS ARE NOT FINAL AND READY FOR USE, AND THEREFORE NOT VALID, UNLESS THEY ARE SEALED, SIGNED AND DATED.

Copyright, Ltd 2023

Consultant

AINSWORTH ASSOCIATES
MECHANICAL ENGINEERS
1420 HOLCOMB AVE., SUITE 201
RENO, NV 89502
TEL: 775-329-9100
4557 GREENVIEW DR.
EL DORADO HILLS, CA 95762
TEL: 916-737-6014
www.aa-me.com

JOB 2021-065

PLEASE RECYCLE

Project

CITY OF FERNLEY CRRC

Job No: 21-058.00

Owner

CITY OF FERNLEY

PROGRESS NOT FOR CONSTRUCTION

50% CONSTRUCTION DOCUMENTS

REVISIONS		
REV	DATE	DESCRIPTION

Sheet Title

PLUMBING PARTIAL FLOOR PLAN - ALT. B

Date: MARCH 21, 2023

Sheet No:

P1.11B

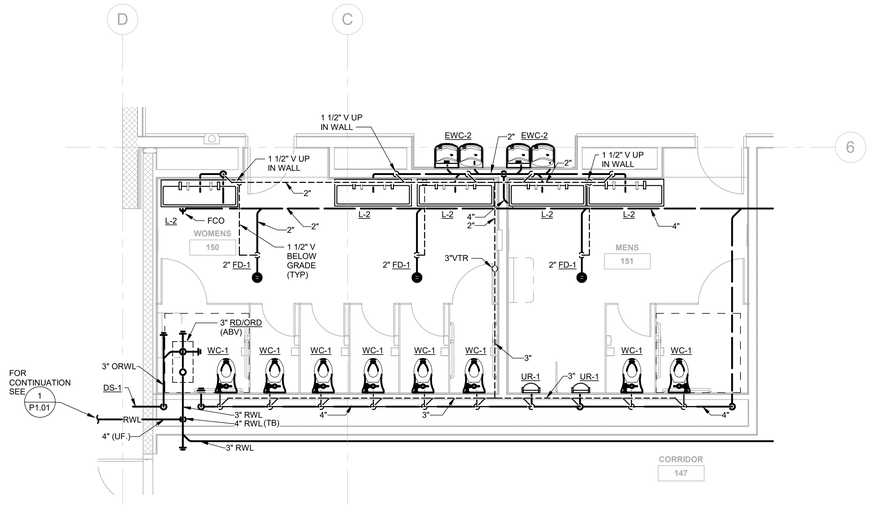

PLUMBING ENLARGED PLANS - GYM RESTROOMS WASTE AND VENT

SCALE: 1/4" = 1'-0"

1 / P2.11B

N

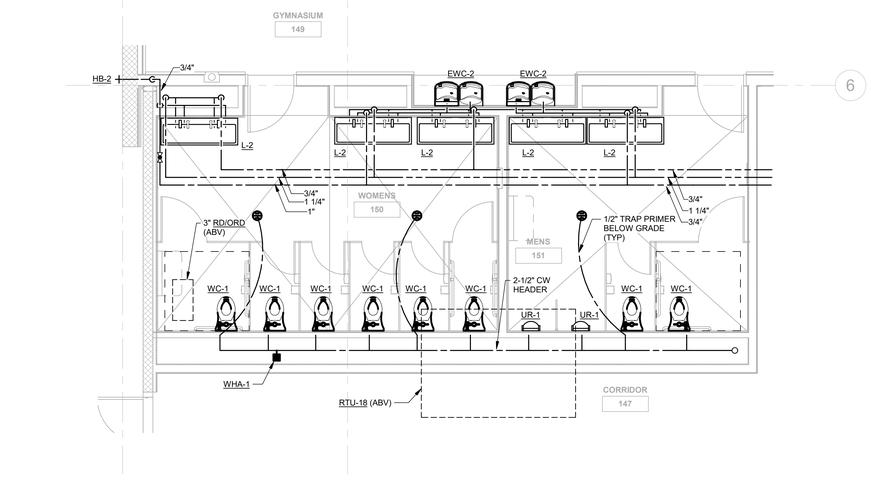

PLUMBING ENLARGED PLANS - GYM RESTROOMS WATER AND UTILITIES

SCALE: 1/4" = 1'-0"

2 / P2.11B

N

tsk

225 South Arlington Avenue
Reno NV, 89501
phone: 775.857.2949
fax: 775.857.2403
www.tska.com

THESE DRAWINGS AND SPECIFICATIONS ARE THE PROPERTY OF TATE SNYDER KIMSEY ARCHITECTS AND MAY NOT BE REPRODUCED OR USED FOR ANY PURPOSE WITHOUT THE ARCHITECTS WRITTEN CONSENT. AS INSTRUMENTS OF SERVICE, THESE DOCUMENTS ARE NOT FINAL AND READY FOR USE, AND THEREFORE NOT VALID, UNLESS THEY ARE SEALED, SIGNED AND DATED.

Copyright, Ltd 2023

Consultant

AINSWORTH ASSOCIATES
MECHANICAL ENGINEERS
1420 HOLCOMB AVE., SUITE 201
RENO, NV 89502
TEL: 775-329-9100
4557 GREENVIEW DR.
EL DORADO HILLS, CA 95762
TEL: 916-737-6014
www.aa-me.com

JOB 2021-065

PLEASE RECYCLE

Project

CITY OF FERNLEY CRRC

Job No: 21-058.00

Owner

CITY OF FERNLEY

PROGRESS
NOT FOR CONSTRUCTION

50% CONSTRUCTION DOCUMENTS

REVISIONS		
REV	DATE	DESCRIPTION

Sheet Title

PLUMBING ENLARGED FLOOR PLANS - ALT. B

Date: MARCH 21, 2023

Sheet No:

P2.11B

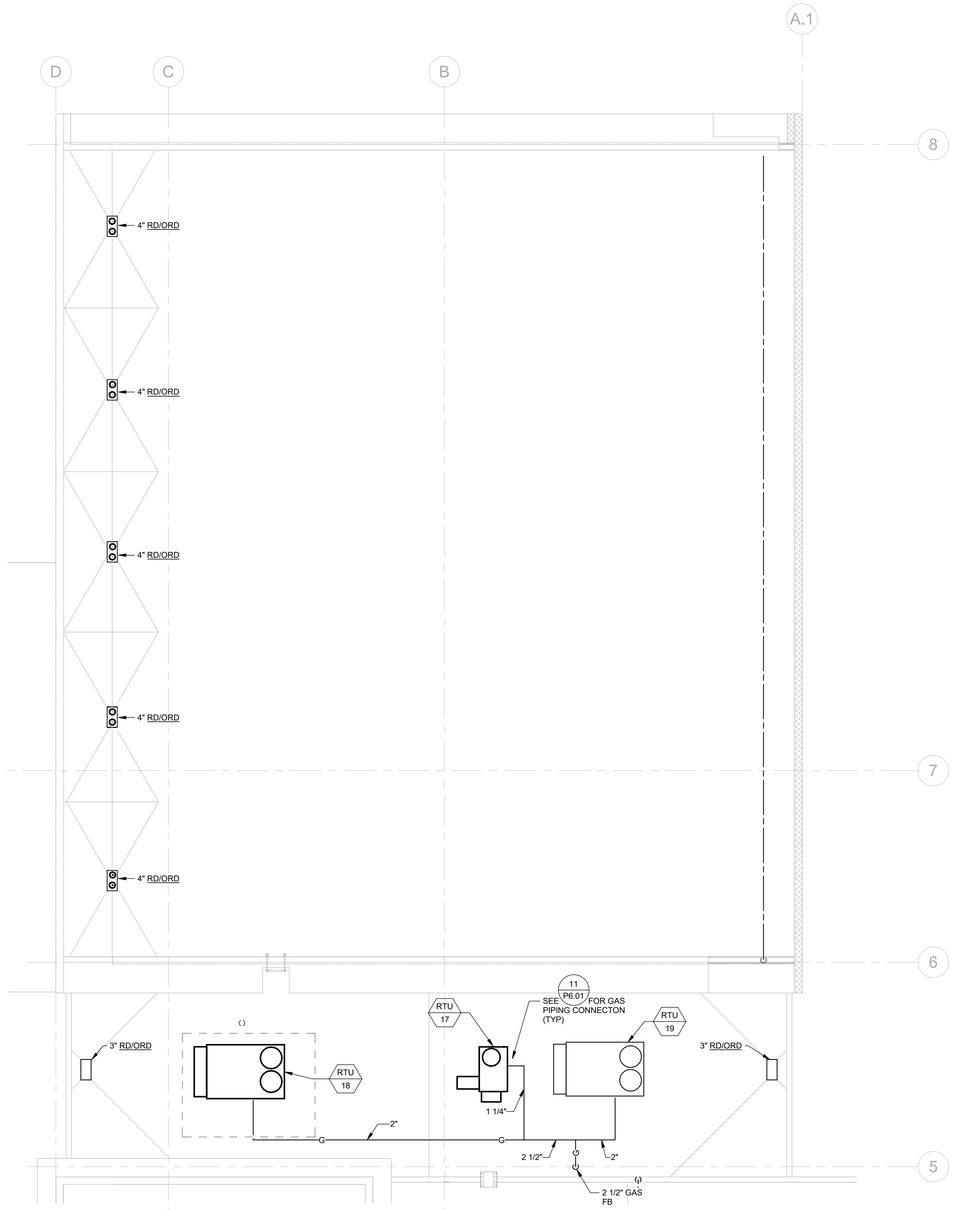

PLUMBING PARTIAL ROOF PLAN - ALT. B (1 / P4.01B)

SCALE: 1/8" = 1'-0"

N

tsk

225 South Arlington Avenue
Reno NV, 89501
phone: 775.857.2949
fax: 775.857.2403
www.tska.com

THESE DRAWINGS AND SPECIFICATIONS ARE THE PROPERTY OF TATE SNYDER KIMSEY ARCHITECTS AND MAY NOT BE REPRODUCED OR USED FOR ANY PURPOSE WITHOUT THE ARCHITECTS WRITTEN CONSENT.
AS INSTRUMENTS OF SERVICE, THESE DOCUMENTS ARE NOT FINAL AND READY FOR USE, AND THEREFORE NOT VALID, UNLESS THEY ARE SEALED, SIGNED AND DATED.

Copyright, Ltd 2023

Consultant

AINSWORTH ASSOCIATES
MECHANICAL ENGINEERS
1420 HOLCOMB AVE., SUITE 201
RENO, NV 89502
TEL: 775-329-9100
4557 GREENVIEW DR.
EL DORADO HILLS, CA 95762
TEL: 916-737-6014
www.aa-me.com

JOB 2021-065

PLEASE RECYCLE

Project

CITY OF FERNLEY CRRC

Job No: 21-058.00

Owner

CITY OF FERNLEY

PROGRESS
NOT FOR CONSTRUCTION

50% CONSTRUCTION DOCUMENTS

REVISIONS		
REV	DATE	DESCRIPTION

Sheet Title

PLUMBING PARTIAL ROOF PLAN - ALT. B

Date: MARCH 21, 2023

Sheet No:

P4.01B

GENERAL NOTES

1. (E) AND/OR SOLID HALFTONE LINES INDICATE EXISTING EQUIPMENT, (R) AND/OR DASHED LINES INDICATE RELOCATED EQUIPMENT, (N) AND/OR SOLID LINES INDICATE NEW EQUIPMENT UNLESS NOTED OTHERWISE.
2. LIGHTING FIXTURES DESIGNATED AS 'EMERGENCY' SHALL BE WIRED TO OPERATE WITH LOCAL SWITCHING UNDER NORMAL POWER CONDITIONS AND SHALL OPERATE VIA EMERGENCY BATTERY PACK OR INVERTER UPON LOSS OF BUILDING UTILITY POWER ONLT, UNLESS NOTED OTHERWISE.
3. EXIT SIGNS SHALL BE WIRED AHEAD OF LOCAL SWITCHING AND LIGHTING CONTROL PANEL FOR CONTINUOUS OPERATION. EXIT SIGNS SHALL BE WALL-MOUNTED ABOVE DOORS WHERE PRACTICAL. PROVIDE ADDITIONAL EXIT SIGNS AS NECESSARY FOR APPROVAL BY THE AUTHORITY HAVING JURISDICTION, PER ARCHITECT'S FINAL PATH OF EGRESS / EXITING PLAN.
4. ELECTRICAL CONDUITS SHALL BE RUN CONCEALED WHERE BUILDING CONSTRUCTION ALLOWS. ANY EXPOSED CONDUIT SHALL BE APPROVED BY THE ARCHITECT PRIOR TO INSTALLATION. ANY EXPOSED CONDUIT, FITTING, SUPPORTS, ETC SHALL BE PAINTED TO MATCH THE SURFACE ON WHICH THEY ARE INSTALLED.
5. REFER TO ARCHITECTURAL REFLECTED CEILING PLANS, SECTIONS, ELEVATIONS, ETC. FOR EXACT LOCATION OF LIGHTING FIXTURES.
6. EXACT LOCATION AND MOUNTING HEIGHT OF EXTERIOR BUILDING-MOUNTED FIXTURES SHALL BE COORDINATED WITH ARCHITECT PRIOR TO ROUGH-IN.
7. CONTRACTOR SHALL BE RESPONSIBLE FOR COORDINATING FINAL FIXTURE LOCATIONS, ABOVE-CEILING HOUSING CLEARANCES, ETC. WITH MECHANICAL, PLUMBING, SPRINKLER CONTRACTOR AND OTHER TRADES PRIOR TO ROUGH-IN.
8. PROVIDE MULTIPLE-GANG FACEPLATES AS NECESSARY WHERE TWO OR MORE LIGHT SWITCHES ARE INDICATED IN A COMMON LOCATION. SINGLE-GANG FACEPLATES FOR A GROUP OF LIGHT SWITCHES ARE NOT PERMITTED.
9. PROVIDE STAINLESS STEEL DEVICE PLATES IN KITCHEN AND ROUGH-SERVICE AREAS.
10. CONDUIT FOR BUILDING-MOUNTED LIGHT FIXTURES SHALL BE ROUTED THROUGH INTERIOR OF BUILDING. LIGHT FIXTURE BACKBOXES SHALL BE RECESSED.

(###) SHEET NOTES

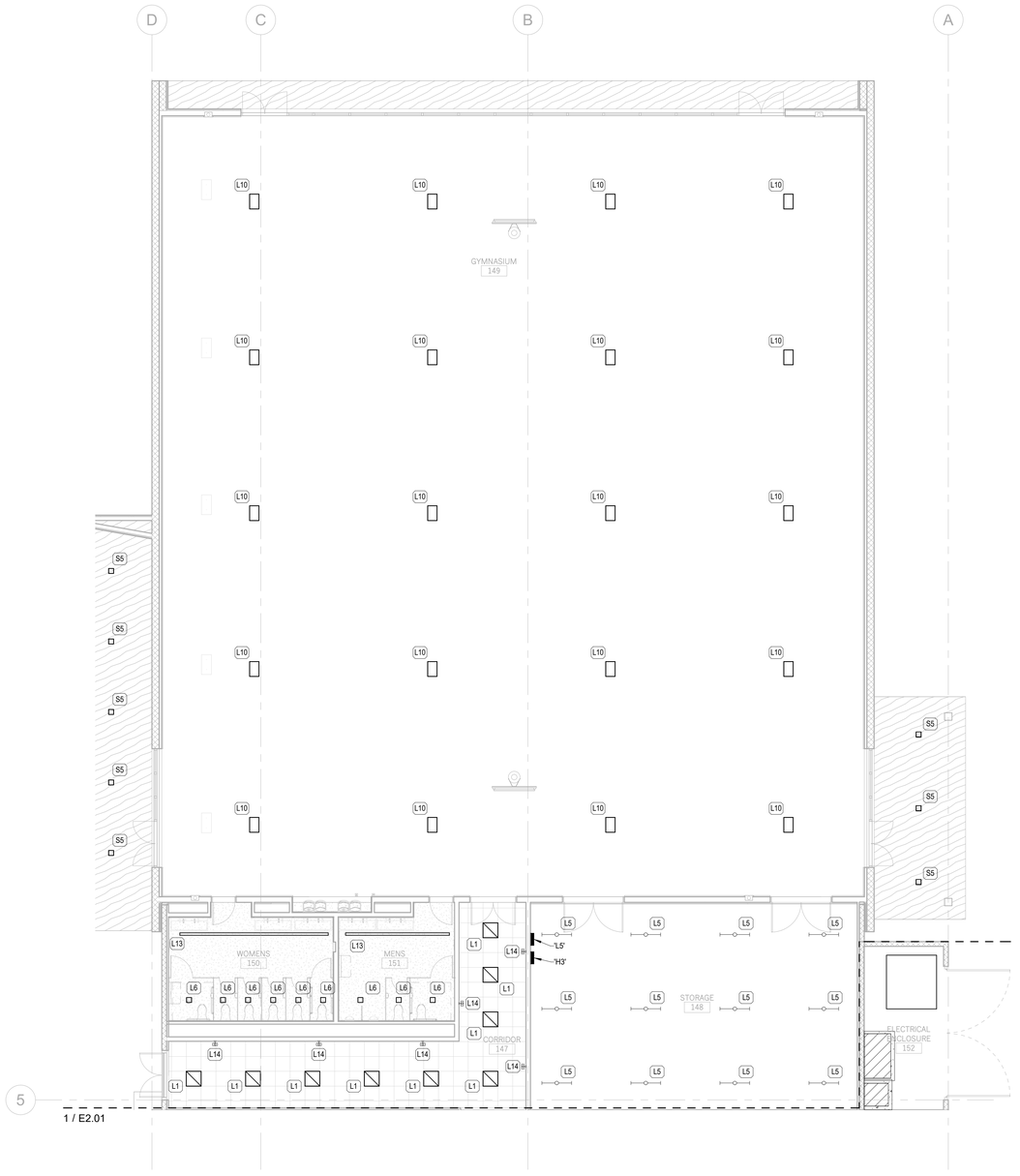

1 E2.01B LIGHTING PLAN - ALT B
Scale: 1/8" = 1'-0"

tsk
225 South Arlington Avenue
Reno NV, 89501
phone: 775.857.2949
fax: 775.857.2403
www.tska.com

THESE DRAWINGS AND SPECIFICATIONS ARE THE PROPERTY OF TATE SNYDER KIMSEY ARCHITECTS AND MAY NOT BE REPRODUCED OR USED FOR ANY PURPOSE WITHOUT THE ARCHITECTS WRITTEN CONSENT.
AS INSTRUMENTS OF SERVICE, THESE DOCUMENTS ARE NOT FINAL AND READY FOR USE, AND THEREFORE NOT VALID, UNLESS THEY ARE SEALED, SIGNED AND DATED.
Copyright, Ltd 2023

Consultant

PK Electrical, Inc.
Engineering Design Consulting
681 Sierra Rose Drive, Suite B | Reno, NV 89511 | 775.826.9010
4601 DTC Boulevard, Suite 740 | Denver, CO 80237 | 720.481.3290
pkelectrical.com

PLEASE RECYCLE

Project
CITY OF FERNLEY CRRC

Job No: 21-058.00

Owner
CITY OF FERNLEY

50% CONSTRUCTION DOCUMENTS

REVISIONS		
REV	DATE	DESCRIPTION

Sheet Title
LIGHTING PLAN - ALT B

Date: MARCH 21, 2023
Sheet No:
E2.01B

GENERAL NOTES

1. (E) AND/OR SOLID HALFTONE LINES INDICATE EXISTING EQUIPMENT, (R) AND/OR DASHED LINES INDICATE RELOCATED EQUIPMENT, (N) AND/OR SOLID LINES INDICATE NEW EQUIPMENT UNLESS NOTED OTHERWISE.
2. CONTRACTOR SHALL COORDINATE FINAL RECEPTACLE LOCATIONS WITH TELECOM OUTLETS PRIOR TO ROUGH-IN. EACH TELECOM OUTLET SHALL HAVE A RECEPTACLE LOCATED WITHIN 12", MEASURED FROM CENTER OF DEVICES.
3. MODULAR FURNITURE: ELECTRICAL CONTRACTOR RESPONSIBLE FOR ON-SITE COORDINATION WITH FURNITURE SUPPLIER TO VERIFY FINAL WIRING REQUIREMENTS, CIRCUITING, J-BOX LOCATIONS, ETC. PRIOR TO ROUGH-IN. ELECTRICAL CONTRACTOR TO PROVIDE ALL HARDWARE AND ACCESSORIES NECESSARY FOR A COMPLETE INSTALLATION. FURNITURE SUPPLIER TO PROVIDE POWER WHIPS, ELECTRICAL CONTRACTOR TO MAKE FINAL CONNECTIONS TO FURNITURE. DESIGN INTENT OF THESE DRAWINGS ASSUMES 3-CIRCUIT, 8-WIRE MODULAR FURNITURE SYSTEM (3H, 3N, G, DED, G). NO MORE THAN SIX (6) WORKSTATIONS PER EACH 3-CIRCUIT GROUP, UNLESS NOTED OTHERWISE.
4. COORDINATE EXACT MOUNTING HEIGHTS AND LOCATIONS OF GENERAL RECEPTACLES, SPECIAL OUTLETS AND DISCONNECT SWITCHES IN SHOP AREAS WITH OWNER AND EQUIPMENT SUPPLIERS PRIOR TO ROUGH-IN.
5. CONDUITS FOR ROOF-MOUNTED DEVICES AND EQUIPMENT SHALL BE RUN BELOW ROOF DECK/SYSTEM. ROOF MOUNTED CONDUITS WILL ONLY BE CONSIDERED AND APPROVED IN WRITING BY THE ARCHITECT/ENGINEER.
6. VERIFY EXACT ELECTRICAL REQUIREMENTS, PLUG CONFIGURATIONS, ETC., AND FINAL LOCATIONS OF OWNER-PROVIDED EQUIPMENT WITH OWNER'S REPRESENTATIVE PRIOR TO ORDERING OF MATERIALS AND ROUGH-IN.

SHEET NOTES

P01 POWERED AUTOMATIC VALVE JUNCTION BOX FLUSH IN WALL. COORDINATE ROUGH-IN WITH PLUMBING CONTRACTOR. INSTALL POWER SUPPLY IN ACCESSIBLE LOCATION. CONNECT ALL VALVES AS REQUIRED FOR COMPLETE SYSTEM.

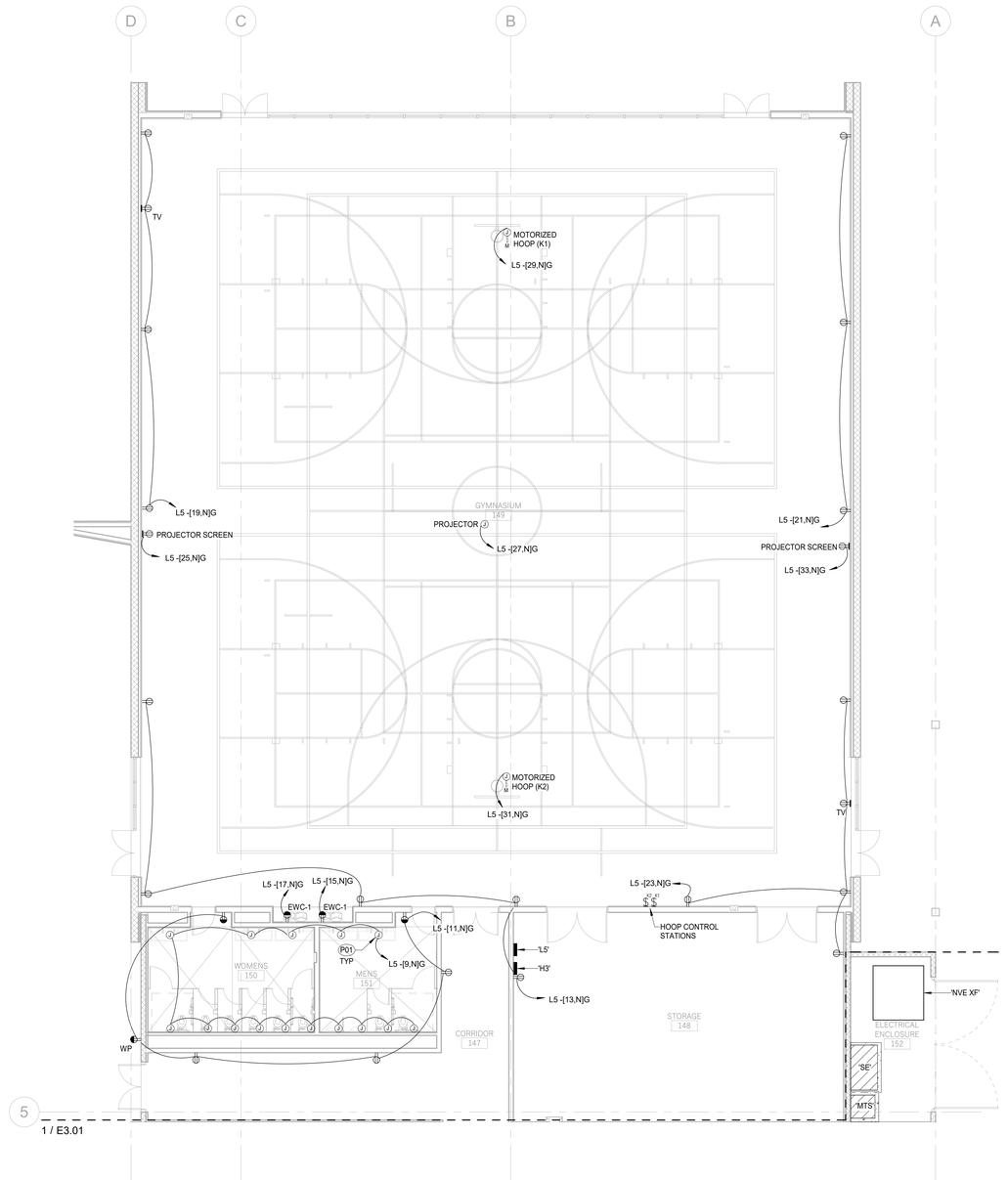

1 E3.01B POWER PLAN - GYMNASIUM
Scale: 1/8" = 1'-0"

tsk
225 South Arlington Avenue
Reno NV, 89501
phone: 775.857.2949
fax: 775.857.2403
www.tska.com

THESE DRAWINGS AND SPECIFICATIONS ARE THE PROPERTY OF TATE SNYDER KIMSEY ARCHITECTS AND MAY NOT BE REPRODUCED OR USED FOR ANY PURPOSE WITHOUT THE ARCHITECTS WRITTEN CONSENT. AS INSTRUMENTS OF SERVICE, THESE DOCUMENTS ARE NOT FINAL AND READY FOR USE, AND THEREFORE NOT VALID, UNLESS THEY ARE SEALED, SIGNED AND DATED.

Copyright, Ltd 2023

Consultant

PK Electrical, Inc.
Engineering Design Consulting
681 Sierra Rose Drive, Suite B | Reno, NV 89511 | 775.826.9010
4601 DTC Boulevard, Suite 740 | Denver, CO 80237 | 720.481.3290
pkelectrical.com

PLEASE RECYCLE

Project
CITY OF FERNLEY
CRRC

Job No: 21-058.00

Owner
CITY OF FERNLEY

50% CONSTRUCTION DOCUMENTS

REVISIONS		
REV	DATE	DESCRIPTION

Sheet Title
POWER PLAN - ALT B

Date: MARCH 21, 2023
Sheet No:
E3.01B

MECHANICAL EQUIPMENT SCHEDULE - ALT B										
EQUIPMENT ID	EQUIPMENT DESCRIPTION	VOLTAGE	POLES	WATTAGE	WIRE SIZE (#12 UNO)	DISCONNECT	NEMA RATING	FUSE SIZE	PANEL - CIRCUIT	NOTES
DF-1	DESTRAT. FAN	208 V	2	1850 VA		30A	NEMA 1		L5 - 1,3	

GENERAL NOTES

1. (E) AND/OR SOLID HALFTONE LINES INDICATE EXISTING EQUIPMENT, (R) AND/OR DASHED LINES INDICATE RELOCATED EQUIPMENT, (N) AND/OR SOLID LINES INDICATE NEW EQUIPMENT UNLESS NOTED OTHERWISE.
2. THE CONTRACTOR SHALL OBTAIN ALL WIRING DIAGRAMS ASSOCIATED WITH THE MECHANICAL EQUIPMENT CONTROLS FROM THE MECHANICAL/CONTROLS CONTRACTOR. CONTROL WIRING SHALL BE PROVIDED AND INSTALLED BY CONTROLS CONTRACTOR. ANY CONDUIT REQUIRED FOR CONTROL WIRING SHALL BE PROVIDED AND INSTALLED BY ELECTRICAL CONTRACTOR AND SHALL BE COMPLETED UNDER THE SUPERVISION OF THE MECHANICAL/CONTROLS CONTRACTOR.
3. REFER TO MECHANICAL DRAWINGS FOR MECHANICAL UNIT MODEL NUMBERS AND SPECIFIC ELECTRICAL REQUIREMENTS, OPTIONS AND ACCESSORIES.
4. INFORMATION ON ARCHITECTURAL AND MECHANICAL DRAWINGS SUPERSEDE INFORMATION SHOWN ON ELECTRICAL DRAWINGS. ELECTRICAL CONTRACTOR SHALL COORDINATE WITH ARCHITECTURAL AND MECHANICAL DRAWINGS PRIOR TO ROUGH-IN.
5. ELECTRICAL CONTRACTOR IS RESPONSIBLE FOR VERIFYING ELECTRICAL REQUIREMENTS FOR FINAL MECHANICAL EQUIPMENT INSTALLED. SHOULD THERE BE ANY DISCREPANCY BETWEEN ACTUAL EQUIPMENT INSTALLED AND ELECTRICAL OR MECHANICAL DRAWINGS, CONTRACTOR SHALL NOTIFY ENGINEER IMMEDIATELY FOR CLARIFICATION AND FURTHER DIRECTION.
6. LOCATE ALL DISCONNECTS, STARTERS AND DRIVES WHERE ACCESSIBLE. PROVIDE ACCESS AND CLEARANCE AS REQUIRED PER NEC. PROVIDE ACCESS HATCH IF LOCATED ABOVE HARD LID CEILING.
7. DISCONNECT SWITCHES, STARTERS OR DRIVES PROVIDED BY MECHANICAL AND SHIPPED LOOSE ARE THE RESPONSIBILITY OF THE ELECTRICAL CONTRACTOR TO INSTALL.
8. PIPING AND / OR DUCTWORK SHALL NOT BE ROUTED IN THE DEDICATED ELECTRICAL EQUIPMENT SPACE AT OR ABOVE ELECTRICAL SWITCHBOARDS, DISTRIBUTION BOARDS, PANELBOARDS, ETC. (PER 2011 NEC 110.26E). PROVIDE DEPTH AND WIDTH OF WORKING SPACE FOR ELECTRICAL EQUIPMENT AS REQUIRED PER 2011 NEC 110.26.

SHEET NOTES

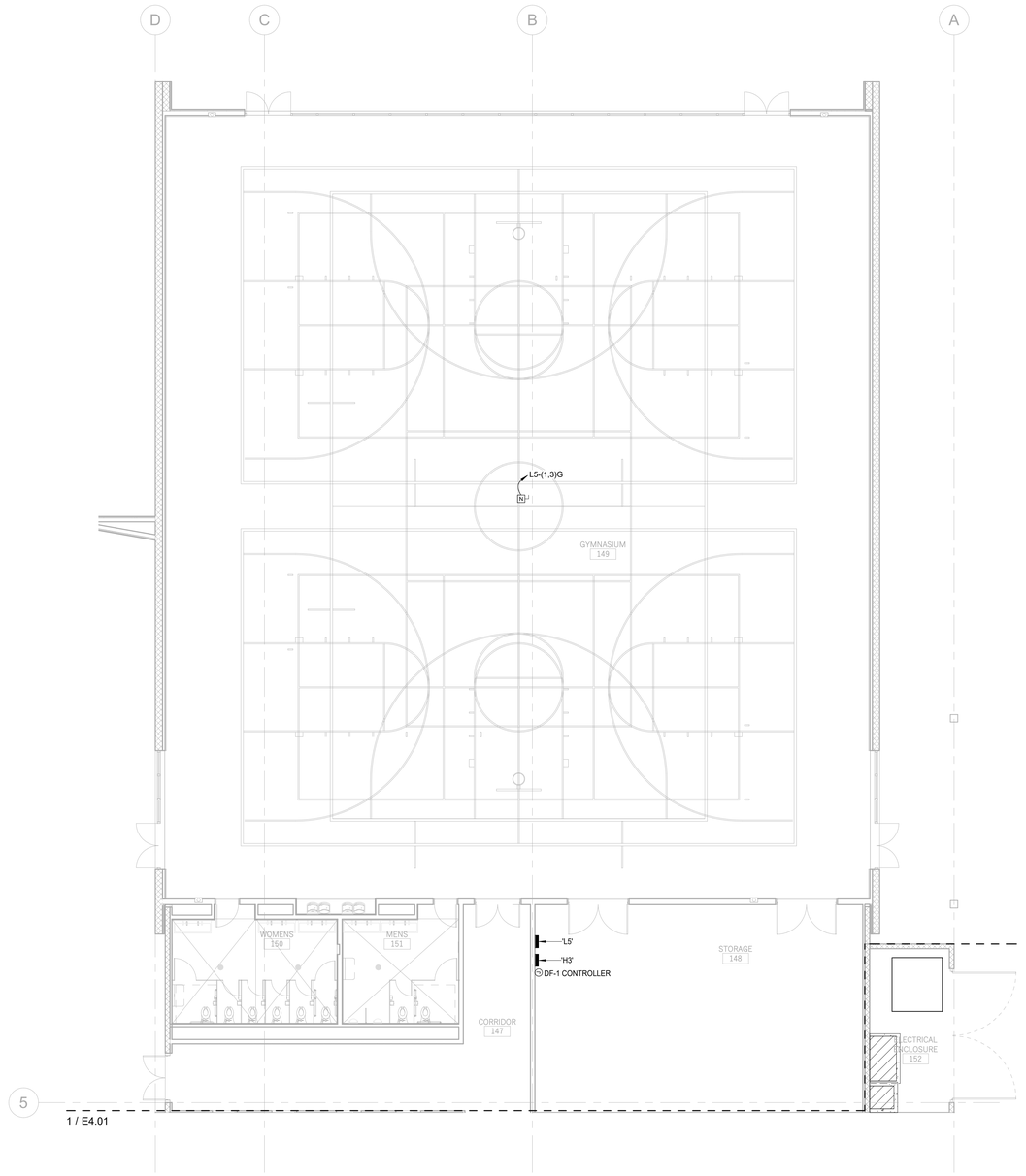

1 / E4.01B — MECHANICAL POWER PLAN - ALT B

Scale: 1/8" = 1'-0"

tsk
225 South Arlington Avenue
Reno NV, 89501
phone: 775.857.2949
fax: 775.857.2403
www.tska.com

THESE DRAWINGS AND SPECIFICATIONS ARE THE PROPERTY OF TATE SNYDER KIMSEY ARCHITECTS AND MAY NOT BE REPRODUCED OR USED FOR ANY PURPOSE WITHOUT THE ARCHITECTS WRITTEN CONSENT. AS INSTRUMENTS OF SERVICE, THESE DOCUMENTS ARE NOT FINAL AND READY FOR USE, AND THEREFORE NOT VALID, UNLESS THEY ARE SEALED, SIGNED AND DATED.

Copyright, Ltd 2023

Consultant

PK Electrical, Inc.
Engineering Design Consulting
681 Sierra Rose Drive, Suite B | Reno, NV 89511 | 775.826.9010
4601 DTC Boulevard, Suite 740 | Denver, CO 80237 | 720.481.3290
pkelectrical.com

PLEASE RECYCLE

Project
CITY OF FERNLEY CRRC

Job No: 21-058.00

Owner
CITY OF FERNLEY

50% CONSTRUCTION DOCUMENTS

REVISIONS		
REV	DATE	DESCRIPTION

Sheet Title
MECHANICAL POWER PLAN - ALT B

Date: MARCH 21, 2023

Sheet No:
E4.01B

MECHANICAL EQUIPMENT SCHEDULE - ALT B ROOF										
EQUIPMENT ID	EQUIPMENT DESCRIPTION	VOLTAGE	POLES	WATTAGE	WIRE SIZE (#12 UNO)	DISCONNECT	NEMA RATING	FUSE SIZE	PANEL - CIRCUIT	NOTES
EF-10	EXHAUST FAN	120 V	1	500 VA		INTEGRAL			L5 - 5	
RTU-17	ROOF TOP UNIT	480 V	3	9960 VA		30A	3R	15A	H3 - 1,3,5	
RTU-18	ROOF TOP UNIT	480 V	3	27270 VA	1"C. W/ (3) #6 & #10G.	60A	3R	50A	H3 - 2,4,6	
RTU-19	ROOF TOP UNIT	480 V	3	27270 VA	1"C. W/ (3) #6 & #10G.	60A	3R	50A	H3 - 7,9,11	

GENERAL NOTES

1. (E) AND/OR SOLID HALFTONE LINES INDICATE EXISTING EQUIPMENT, (R) AND/OR DASHED LINES INDICATE RELOCATED EQUIPMENT, (N) AND/OR SOLID LINES INDICATE NEW EQUIPMENT UNLESS NOTED OTHERWISE.
2. THE CONTRACTOR SHALL OBTAIN ALL WIRING DIAGRAMS ASSOCIATED WITH THE MECHANICAL EQUIPMENT CONTROLS FROM THE MECHANICAL/CONTROLS CONTRACTOR. CONTROL WIRING SHALL BE PROVIDED AND INSTALLED BY CONTROLS CONTRACTOR. ANY CONDUIT REQUIRED FOR CONTROL WIRING SHALL BE PROVIDED AND INSTALLED BY ELECTRICAL CONTRACTOR AND SHALL BE COMPLETED UNDER THE SUPERVISION OF THE MECHANICAL/CONTROLS CONTRACTOR.
3. REFER TO MECHANICAL DRAWINGS FOR MECHANICAL UNIT MODEL NUMBERS AND SPECIFIC ELECTRICAL REQUIREMENTS, OPTIONS AND ACCESSORIES.
4. INFORMATION ON ARCHITECTURAL AND MECHANICAL DRAWINGS SUPERSEDE INFORMATION SHOWN ON ELECTRICAL DRAWINGS. ELECTRICAL CONTRACTOR SHALL COORDINATE WITH ARCHITECTURAL AND MECHANICAL DRAWINGS PRIOR TO ROUGH-IN.
5. ELECTRICAL CONTRACTOR IS RESPONSIBLE FOR VERIFYING ELECTRICAL REQUIREMENTS FOR FINAL MECHANICAL EQUIPMENT INSTALLED. SHOULD THERE BE ANY DISCREPANCY BETWEEN ACTUAL EQUIPMENT INSTALLED AND ELECTRICAL OR MECHANICAL DRAWINGS, CONTRACTOR SHALL NOTIFY ENGINEER IMMEDIATELY FOR CLARIFICATION AND FURTHER DIRECTION.
6. LOCATE ALL DISCONNECTS, STARTERS AND DRIVES WHERE ACCESSIBLE. PROVIDE ACCESS AND CLEARANCE AS REQUIRED PER NEC. PROVIDE ACCESS HATCH IF LOCATED ABOVE HARD LID CEILING.
7. DISCONNECT SWITCHES, STARTERS OR DRIVES PROVIDED BY MECHANICAL AND SHIPPED LOOSE ARE THE RESPONSIBILITY OF THE ELECTRICAL CONTRACTOR TO INSTALL.
8. PIPING AND / OR DUCTWORK SHALL NOT BE ROUTED IN THE DEDICATED ELECTRICAL EQUIPMENT SPACE AT OR ABOVE ELECTRICAL SWITCHBOARDS, DISTRIBUTION BOARDS, PANELBOARDS, ETC. (PER 2011 NEC 110.26E). PROVIDE DEPTH AND WIDTH OF WORKING SPACE FOR ELECTRICAL EQUIPMENT AS REQUIRED PER 2011 NEC 110.26.

SHEET NOTES

P02 CONNECT TO 120V/20A GFCI RECEPTACLE FURNISHED WITH UNIT.

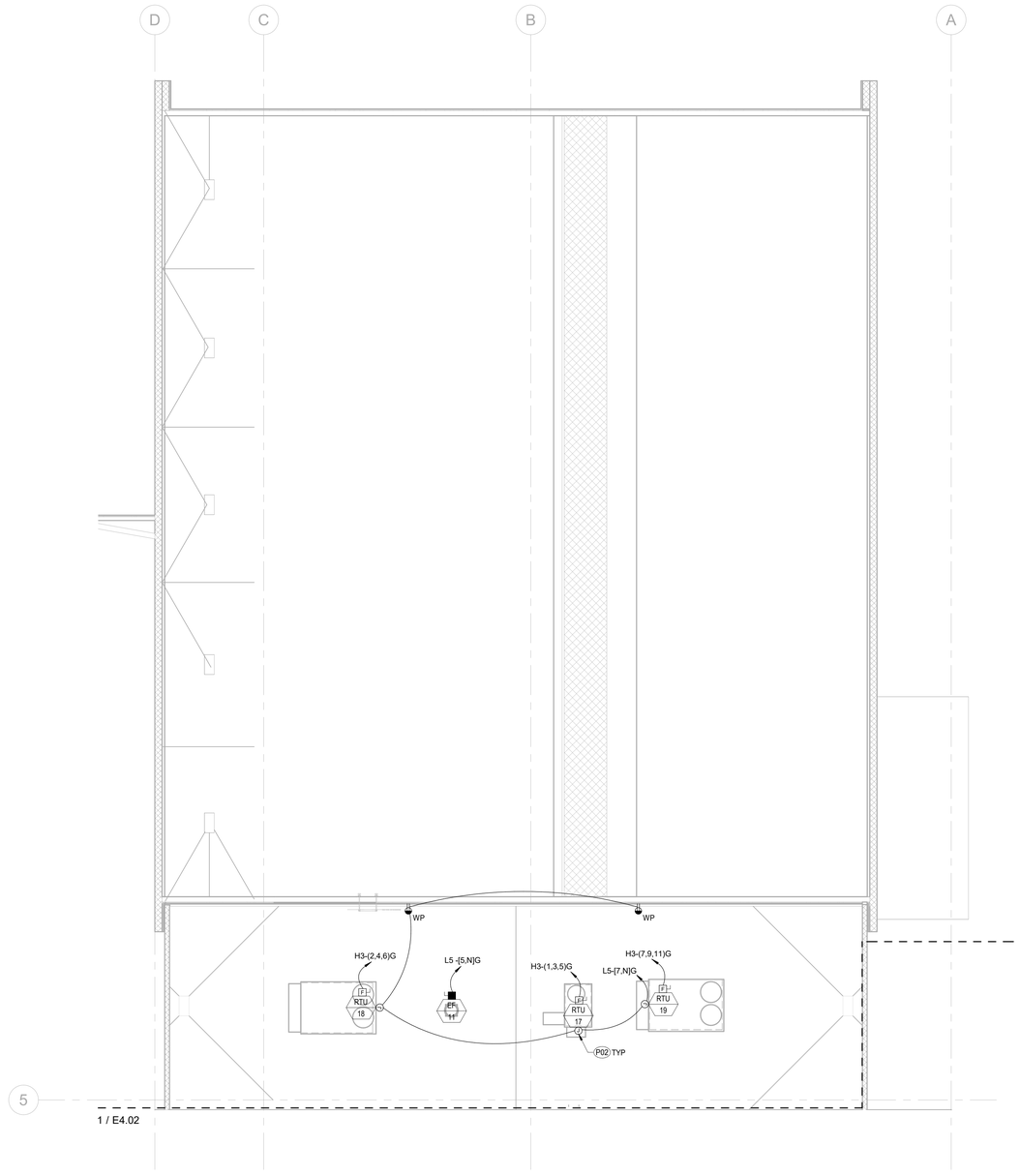

ROOF MECHANICAL POWER PLAN - ALT B

1 / E4.02B

Scale: 1/8" = 1'-0"

tsk
225 South Arlington Avenue
Reno NV, 89501
phone: 775.857.2949
fax: 775.857.2403
www.tska.com

THESE DRAWINGS AND SPECIFICATIONS ARE THE PROPERTY OF TATE SNYDER KIMSEY ARCHITECTS AND MAY NOT BE REPRODUCED OR USED FOR ANY PURPOSE WITHOUT THE ARCHITECTS WRITTEN CONSENT. AS INSTRUMENTS OF SERVICE, THESE DOCUMENTS ARE NOT FINAL AND READY FOR USE, AND THEREFORE NOT VALID, UNLESS THEY ARE SEALED, SIGNED AND DATED.

Copyright, Ltd 2023

Consultant

PK Electrical, Inc.
Engineering Design Consulting
681 Sierra Rose Drive, Suite B | Reno, NV 89511 | 775.826.9010
4601 DTC Boulevard, Suite 740 | Denver, CO 80237 | 720.481.3290
pkelectrical.com

PLEASE RECYCLE

Project

CITY OF FERNLEY CRRC

Job No: 21-058.00

Owner

CITY OF FERNLEY

50% CONSTRUCTION DOCUMENTS

REVISIONS		
REV	DATE	DESCRIPTION

Sheet Title

ROOF MECHANICAL POWER PLAN - ALT B

Date: MARCH 21, 2023

Sheet No:

E4.02B

GENERAL NOTES

1. (E) AND/OR SOLID HALFTONE LINES INDICATE EXISTING EQUIPMENT, (R) AND/OR DASHED LINES INDICATE RELOCATED EQUIPMENT, (N) AND/OR SOLID LINES INDICATE NEW EQUIPMENT UNLESS NOTED OTHERWISE.
2. COORDINATE DEVICE PLACEMENT IN CEILING WITH OTHER TRADES, SUCH AS LIGHTING, TELECOM, MECHANICAL, ETC. ALL FIRE ALARM DEVICES LOCATED IN CEILING TILES SHALL BE LOCATED IN THE CENTER OF THE CEILING TILE UNLESS SPECIFICALLY NOTED OR APPROVED TO DO OTHERWISE.
3. INFORMATION ON ARCHITECTURAL AND MECHANICAL DRAWINGS SUPERSEDE INFORMATION SHOWN ON ELECTRICAL DRAWINGS. ELECTRICAL CONTRACTOR SHALL COORDINATE WITH ARCHITECTURAL AND MECHANICAL DRAWINGS PRIOR TO ROUGH-IN.

SHEET NOTES

F01 SOUND SYSTEM SHUNT RELAY. CONNECT TO FACP TO SHUTDOWN AUDIO SYSTEM UPON FIRE ALARM SYSTEM ACTIVATION.

F07 DESTRATIFICATION FAN SHUTDOWN. LOCATE ADJACENT TO CONTROLLER. FAN SHALL SHUTDOWN UPON FIRE ALARM SYSTEM ACTIVATION.

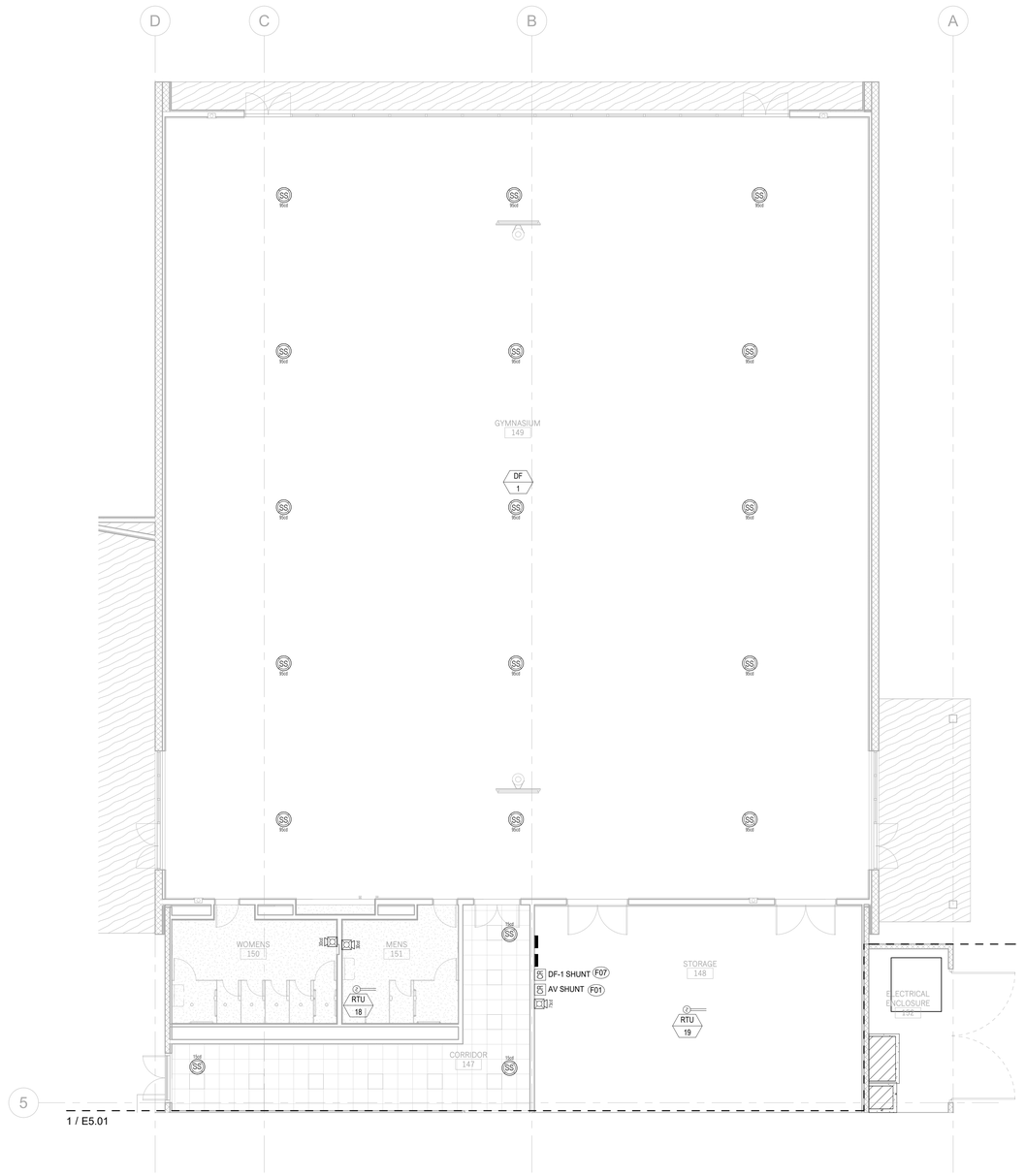

1 E5.01B FIRE ALARM PLAN - ALT B
Scale: 1/8" = 1'-0"

tsk
225 South Arlington Avenue
Reno NV, 89501
phone: 775.857.2949
fax: 775.857.2403
www.tska.com

THESE DRAWINGS AND SPECIFICATIONS ARE THE PROPERTY OF TATE SNYDER KIMSEY ARCHITECTS AND MAY NOT BE REPRODUCED OR USED FOR ANY PURPOSE WITHOUT THE ARCHITECTS WRITTEN CONSENT.
AS INSTRUMENTS OF SERVICE, THESE DOCUMENTS ARE NOT FINAL AND READY FOR USE, AND THEREFORE NOT VALID, UNLESS THEY ARE SEALED, SIGNED AND DATED.

Copyright, Ltd 2023

Consultant

PK Electrical, Inc.
Engineering Design Consulting
681 Sierra Rose Drive, Suite B | Reno, NV 89511 | 775.826.9010
4601 DTC Boulevard, Suite 740 | Denver, CO 80237 | 720.481.3290
pkelectrical.com

PLEASE RECYCLE

Project
CITY OF FERNLEY CRRC

Job No: 21-058.00

Owner
CITY OF FERNLEY

50% CONSTRUCTION DOCUMENTS

REVISIONS		
REV	DATE	DESCRIPTION

Sheet Title
FIRE ALARM PLAN - ALT B

Date: MARCH 21, 2023
Sheet No:
E5.01B

GENERAL NOTES

1. ALL TELECOMMUNICATIONS CABELING SHOWB ON THIS SHEET SHALL TERMINATE IN MDF ROOM 101 (UNLESS OTHERWISE NOTED)
2. LOCATIONS AND MOUNTING HEIGHTS SHALL BE VERIFIED WITH ARCHITECT PRIOR TO INSTALLATION.
3. REFER TO SHEET T0.01 FOR SYMBOLS, LEGEND, AND PROJECT GENERAL NOTES.
4. PROVIDE NECESSARY CONDUIT PENETRATIONS AND SLEEVES INTO TELECOM ROOM FOR ALL DATA, AUDIO/VIDEO AND SECURITY CABLING.
5. PROVIDE FIRESTOPPING AS REQUIRED PER APPLICABLE CODES.
6. SEE SHEET T0.06 FOR ACCESS CONTROL SECURITY SYSTEMS DOOR DETAILS.
7. SEE SHEET T0.06 FOR CCTV CAMERA MOUNTING DETAILS.
8. PROVIDE BUSHING ON ALL CONDUIT ENDS.
9. ALL CONDUITS AND INNERDUCTS SHALL HAVE PULL STRING INSTALED IN PATHWAYS WITH INSTALLED CABLING FOR FUTURE USE.
10. E.C. SHALL COORDINATE ALL OUTLET ROUGH -IN LOCATIONS AND HEIGHT WITH AUDIO/VIDEO VENDOR/CONTRACTOR PRIOR TO CONDUIT AND BOX INSTALLATION FOR DISPLAY AND ALL ASSOCIATED AV EQUIPMENT.

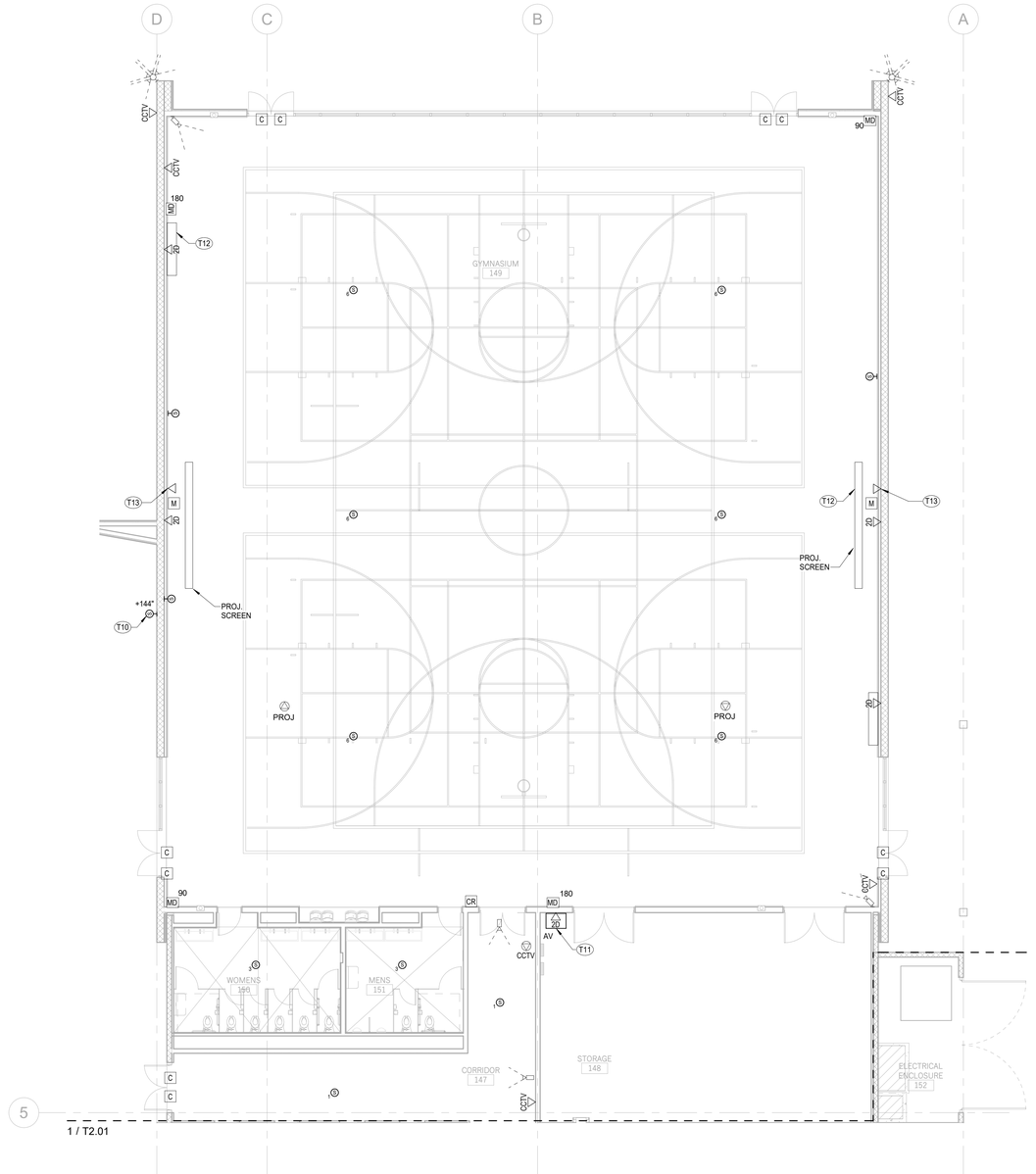

1 T2.01B TELECOM PLAN - ALT B

Scale: 1/8" = 1'-0"

SHEET NOTES

T10 SEE EXTERIOR SPEAKER MOUNTING DETAIL ON SHEET T#.##.

T11 AUDIO/VISUAL EQUIPMENT CABINET. SEE DETAIL ON SHEET T#.##.

T12 FURNISH AND INSTALL METALLIC TRACE TAPE ON TOP OF CONDUITS IN TRENCH.

T13 DATA OUTLET LOCATED AND COORDINATED WITH PROJ. SCREEN CONTROL LOCATION.

tsk

225 South Arlington Avenue
Reno NV, 89501
phone: 775.857.2949
fax: 775.857.2403
www.tska.com

THESE DRAWINGS AND SPECIFICATIONS ARE THE PROPERTY OF TATE SNYDER KIMSEY ARCHITECTS AND MAY NOT BE REPRODUCED OR USED FOR ANY PURPOSE WITHOUT THE ARCHITECTS WRITTEN CONSENT.
AS INSTRUMENTS OF SERVICE, THESE DOCUMENTS ARE NOT FINAL AND READY FOR USE, AND THEREFORE NOT VALID, UNLESS THEY ARE SEALED, SIGNED AND DATED.

Copyright, Ltd 2023

Consultant

PK Electrical, Inc.
Engineering Design Consulting

681 Sierra Rose Drive, Suite B | Reno, NV 89511 | 775.826.9010
4601 DTC Boulevard, Suite 740 | Denver, CO 80237 | 720.481.3290
pkelectrical.com

PLEASE RECYCLE

Project
CITY OF FERNLEY CRRC

Job No: 21-058.00

Owner
CITY OF FERNLEY

50% CONSTRUCTION DOCUMENTS

REVISIONS		
REV	DATE	DESCRIPTION

Sheet Title
TELECOM PLAN - ALT B

Date: MARCH 21, 2023

Sheet No:
T2.01B

CONSTRUCTABILITY / DOCUMENT REVIEW

City of Fernley Community Response & Resource Center (CRRC)

Preconstruction Services | April 04, 2023

50% CONSTRUCTION DOCUMENTS – CONSTRUCTABILITY REVIEW

The Constructability Review is a collection of questions, comments, recommendations and other relevant information highlighted on the design documents. This review is done in an effort to make sure the scope of work is clear, the documents are coordinated, and that they assist the subcontractors in bidding, construction and project administration. The primary goal is to reduce and mitigate cost, quality issues, and schedule impacts to the project.

- 50% CD Review Summary and Markups Files: https://core.egnyte.com/fl/bVzeKecD82

The Constructability / Document review is provided in two formats to aid in the evaluation of this information. Both **Summary** format and **Markup** format are provided; further described below.

Summary: Questions and comments are represented as individual items within a log, separated by Page Label. A Thumbnail is provided as a screenshot reference along with the author and the page label on which the markup was created. The comment is provided on the right-hand side.

A1.11A ENLARGED FLOOR PLAN -ALT. A (1)

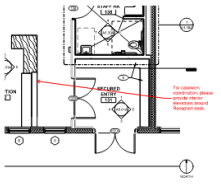

Page Label: A1.11A ENLARGED FLOOR PLAN -ALT. A
Author: Daniel Salego

For casework coordination, please provide interior elevations around Reception desk.

Markup: Questions and comments are represented directly on the Drawing Set and individual sheets provided by the Design Team. Questions and comments can be viewed by standard navigation of the drawing set.

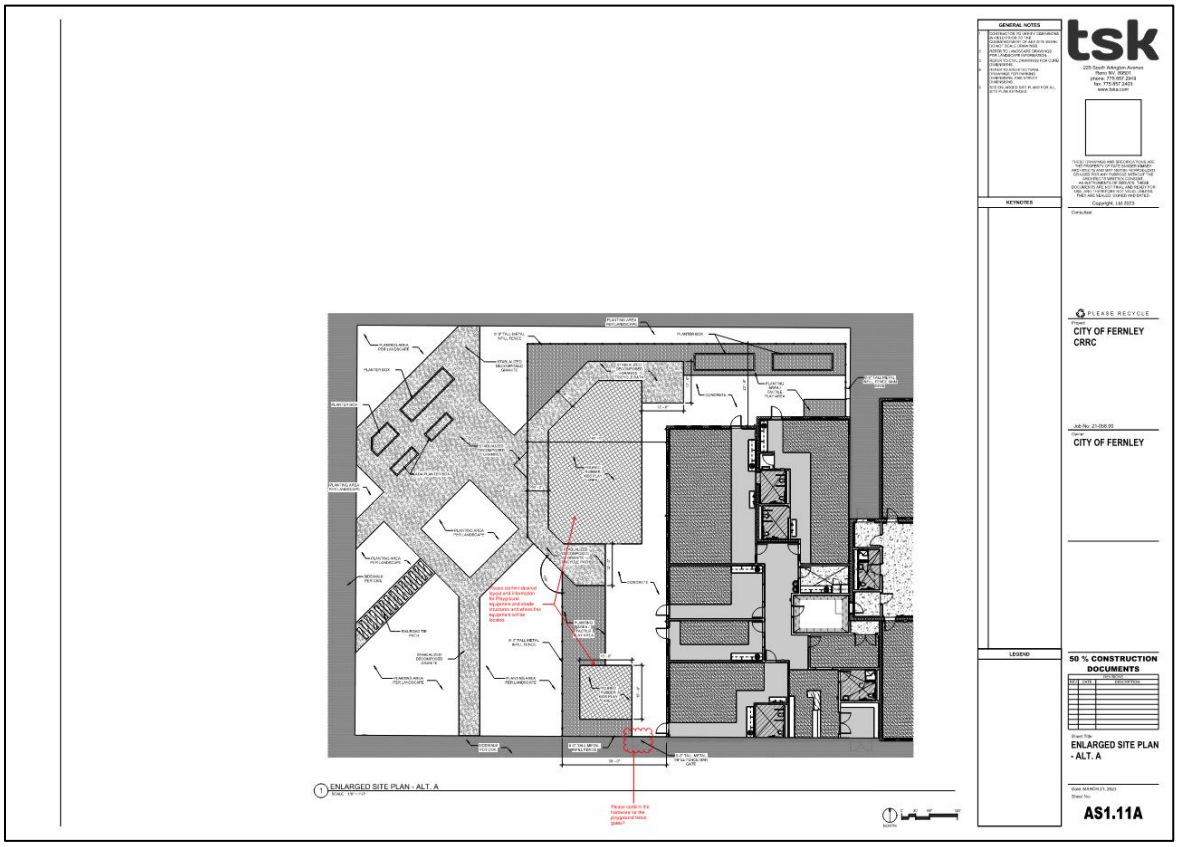

CORE CONSTRUCTION

RISK MITIGATION TRACKING LOG
50% Construction Documents Level

City of Fernley
Community Response and Resource Center
04/04/2022

Item No.	Description	Risk Cat.	Recommended Action	B.I.C.	Resolution Due	Impact To	Cost Impact?	Schedule Impact?	Life Safety/ Security Impact?	Resolved (Date)	Resolution
PHASING & LOGISTICS											
PL1	Construction Access	Low	Construction vehicles and personnel to coordinate around pedestrians at Train Depot/76 entry. Low life safety impact, mainly scheduling impact with Construction vs. City employees	CORE	NTP	Temporary Requirements		X	X		
PL2	Traffic Study - Right Turn Taper	Med	Confirm Right Turn Taper is sufficient, deviation letter may be required after City review to avoid a full Right Turn Lane.	TSK, Lumos, City of Fernley	NTP	Off-Site Construction	X	X			
EXISTING CONDITIONS											
EC1	Existing Sewer Connection	High	Confirm PUE at sewer line does not exist	TSK, LUMOS	Design Development	Utilities	X	X	X	01/19/23	TSK & Lumos confirmed this sewer line terminates as indicated in the documents
EC2	Existing NVE Trenching & Telecom	High	Confirm with NV Energy	TSK, PKE, LUMOS	Construction Documents	Electrical / Utilities	X	X	X		
EC3	Existing Electrical Infrastructure	Med	Coordinate as-built conditions and new site improvements	TSK, PKE, LUMOS	Construction Documents	Electrical / Utilities	X	X			
EC4	Existing Lois Ln. Improvements	Med	Coordinate improvements at Lois Ln. and construction work at all new site improvements.	TSK, LUMOS	Construction Documents	Site Improvements	X	X			
EC5	Existing Backflow	Med	Confirm PUE at water line does not interfere with new Construction.	TSK, LUMOS	Construction Documents	Utilities	X	X			
EC6	Static Pressure / Fire Flow	Med	Confirm water pressure to the site are adequate for the new building and Fire Riser.	TSK, LUMOS	Construction Documents	Utilities	X	X			
SAFETY & SECURITY											
SS1	Active Senior Center	Low	Advance coordination with CoF Staff and Personnel	CORE	NTP	Cost and Schedule		X			
SS2	Senior Center North Entrance	Med	North and West entry into existing Senior Center will be impacted by new construction of the Parking Lot addition. Coordinate with Senior Center personnel to avoid construction activities. (See also item "PL1")	CORE, City of Fernley	NTP	Schedule		X	X		
AHJ & PROCUREMENT REQUIREMENTS											
AP1	Design Approval & Permitting	Med	Close coordination with all approving agencies and AHJs	TSK, CORE	Ongoing	Permitting and Project Schedule	X	X			
AP2	Electrical Switchgear Lead Times	Med	Establish a baseline construction schedule and identify Electrical Design Completion date.	PKE, TSK, CORE	Construction Documents	Project Schedule	X	X			
AP3	Market & Materials Procurement	Med	Monitor materials market conditions for price increases and supply chain issues	CORE	Procurement	Long-term Cost & Project Schedule	X	X			
SCOPING & COST MANAGEMENT											
SC1	West Parking Lot Buffer	Med	Confirm whether a Buffer is needed or desired at the West side of the new parking lot addition, and whether that buffer would need to be landscaping and irrigation, or fencing (and/or what type of fencing). Currently this buffer is excluded.	TSK, Cumming, CORE	100% Construction Documents	On-Site work, Scope and Cost	X	X			
SC2	Fireproofing	High	Confirm the Type II-B structure does not have or need fireproofing, and update project documents accordingly (ref: 3/A3.30)	TSK	100% Construction Documents	Code Requirements, Scope and Cost	X	X	X		
SC3	Kitchen Hoods	Med	Confirm Captive Air kitchen hoods are desired and not Spring Air	TSK/DMH	100% Construction Documents	Kitchen Equipment	X	X			
SC4	Playground Equipment	High	Confirm Number and Type of Playground equipment desired. Currently there are parameters for different structure types in the Specifications, but no quantities or layouts are indicated in the plans or specifications.	TSK/DMH	100% Construction Documents	Site Structures & Equipment	X	X	X		

Item No.	Description	Risk Cat.	Recommended Action	B.I.C.	Resolution Due	Impact To	Cost Impact?	Schedule Impact?	Life Safety/ Security Impact?	Resolved (Date)	Resolution
SC5	Shade Structures	Med	Confirm Number and Type of Shade structures desired (if any). Currently there is an allowance for Playground Shade structures separate from Playground equipment, and an allowance for Shade/Sail structures at the Event Lawn.	TSK	100% Construction Documents	Site Structures & Equipment	X	X			
SC6	Bicycle Rack	Med	Confirm if the Bicycle Rack is intended to be Base Bid or part of Alternate A with the Playground Equipment.	TSK	100% Construction Documents	Site Structures & Equipment	X	X			
SC7	Single-ply Membrane Roofing	Med	Confirm whether the single-ply roofing membrane is TPO per plans (ref: 6/A4.01), or PVC per specs (ref: Spec Section 075419).	TSK	100% Construction Documents	Roofing	X	X			
SC8	Roof Cover Board	Med	Confirm Cover Board is required for standing seam roofing per Roof Type B (ref: 2/A4.20), spec section 074113 lists underlayment, but no Cover Board.	TSK	100% Construction Documents	Roofing - underlayment	X	X			
SC9	Pre-cast Concrete Parapet	Med	Confirm if the Parapet Cap is precast concrete (ref: 9/A4.01) or Prefabricated metal (ref: 8/A6.00).	TSK	100% Construction Documents	Roofing - parapets	X	X			

CITY OF FERNLEY

City Council
AGENDA REPORT

Meeting Date: April 19, 2023

REPORT TO:	Mayor and City Council
REPORT FROM:	**Trisha Conner, Assistant to the City Manager**

FINANCIAL IMPACT:		**CURRENTLY BUDGETED:**		**FUND/ACCOUNT:**
Yes:	No: X	Yes: N/A	No:	N/A

ACTION REQUESTED: Motion

AGENDA ITEM: (For Possible Action):

Discuss and Possible Action regarding the City of Fernley's projects and initiatives identified in the Western Nevada Development District's Comprehensive Economic Development Strategy.

AGENDA ITEM BRIEF:

The Western Nevada Development District (WNDD) Comprehensive Economic Development Strategy (CEDS) is a strategy-driven plan for regional economic development. It is the result of a regionally-owned planning process designed to build capacity and guide the economic prosperity and residency of an area or region. The CEDS is a prerequisite for designation by EDA of WNDD as an Economic Development District (EDD). The CEDS goes through an annual update. The annual update includes a review of the goals, strategies as well as projects/initiatives by each agency included in the WNDD CEDS. The annual update of local projects/initiatives should include a process to solicit input from elected officials. Staff is seeking input from Council of the City projects/initiatives to be incorporated into the annual update.

RECOMMENDED MOTION:

"I move to approve the City of Fernley's project/initiatives list for the 2023 annual update of the WNDD Comprehensive Economic Development Strategy."

BUSINESS IMPACT (per NRS Chapter 237):

A Business Impact Statement is not required because this is not a rule (term excludes vehicles by which legislative powers are exercised under NRS Chapters 271, 278, 278A, or 278B).

See attached report for background, analysis, alternatives.

ALTERNATIVES:

Council may change the list.

BACKGROUND:
Back in 2012, the Stronger Economies Together (SET) program, a USDA Rural Development initiative, established the basis for the 2014 CEDS. SET brought over 200 people from throughout the region to develop the SET Blueprint and this regional collaboration, final document, and SET work groups provided the basis for the WNDD CEDS. Members of City staff and elected officials attended the SET workshops.

The Western Nevada Development District represents the eight counties of Churchill, Douglas, Humboldt, Lyon, Mineral, Pershing, Storey and Washoe; the municipality of Carson City; the cities of Fallon, Fernley, Lovelock, Reno, Sparks, Winnemucca; and the Pyramid Lake Paiute Tribe/NUMU as well as the associate members located within the region. A cornerstone of WNDD's mission to diversify and strengthen the regional economy is the Comprehensive Economic Development Strategy (CEDS), which is a roadmap to progress and prosperity. The CEDS is a locally based, regionally driven economic development planning process and document that successfully engages the region's community leaders, private sector partners, and stakeholders. This framework enables the region and its partners to strengthen their leverage and expand regional capacity to attract outside resources to build a sustainable and resilient economy. The result creates an economic roadmap to diversify and strengthen the regional economy and to qualify the region for additional assistance from the Economic Development Administration of the U.S. Department of Commerce (EDA).

WNDD CEDS 2020-2025 Goals & Strategies

- Economic Resiliency
- Infrastructure
- Transportation
- Housing
- Quality of Life
- Workforce

The CEDS is used by local and regional economic development partners to coordinate and prioritize regional economic development projects and strategies. The coordination and prioritization become more important when the growth opportunities in the region are considered. These opportunities do not stop at existing county and city boundaries and the opportunities impact multiple jurisdictions. The CEDS is implemented by local and regional economic development partners as they develop projects and programs and make investments related to activities identified in the CEDS. The plan identifies goals, strategies, and implementable actions for the community to pursue for economic and community development. When applying for investment assistance from the U.S. Economic Development Administration or USDA Rural Development, projects cited in the CEDS or included as a part of the plans goals and strategies will strengthen an application and, dependent upon the funding agency, may be required to secure additional application points. The CEDS may also be used for applications to other public and private sector funding agencies, the CEDS should not be viewed as being solely for EDA and USDA applications. The CEDS is updated annually and revisited, revised, and rewritten every five years.

WNDD CEDS 2023 Update
The Western Nevada Development District and the University Center for Economic Development, part of the College of Business at the University of Nevada, Reno, conducted the annual evaluation and update workshop for WNDD's 2020 through 2025 Comprehensive Economic Development Strategy on March 31, 2023. This strategic economic development planning workshop was hosted by the City of Fernley in the City Council Chambers. Workshop participants included WNDD members and key community stakeholders who were given

an opportunity to evaluate the existing strategic economic development vision, goals, and actionable items. The participants also prioritized projects, assessed existing local and regional socio-demographics, and economic and housing conditions. The workshop completed a revised Strengths, Weaknesses, Opportunities, and Threats (SWOT) Analysis for the region, and teed up the final selection of revised priority CEDS projects for the coming year.

Fernley Projects/Initiatives Update
The WNDD CEDS contains a list of projects supporting economic development with an emphasis on infrastructure that alight with the visions, goals, and objectives of the CEDS. Including these projects in the CEDS makes them more competitive for EDA and other funding, and informs the WNDD Board and staff on what is being planned in terms of community and economic development across the region.The review and update of Fernley projects/initiatives should include a process to solicit input from elected officials and staff with final approval of the CEDS Update by the respective governing board. Staff is recommending the following priority projects to be incorporated into the 2023 annual update of the WNDD's CEDS.

Recommended Projects/Initiatives

- Community Response & Resource Center - Construction
- Fernley Lands Bill (BOR Park Development - Develop federal surplus property into urban recreation complex/parks/areas
- Railroad Underpass Improvements at I-80 Exit 46, west Fernley
- Fernley Railroad Depot Improvements - sewer, water lines, restrooms, roof repair, interior upgrades, access, and landscaping
- Main Street Revitalization
- Surface Water Treatment Integration at Water Treatment Plant Design and Construction
- Investigation into the Improvements to Deliver and Treat Brady's Hot Springs Water to the Water Treatment Plant
- Highway 50 Looping Water Main Design and Construction
- East Wastewater Treatment Plant - Preliminary Engineering Report and Construction
- Shadow Lane Reconstruction Project (US 50A/95A to SR 828)
- Fernley Industrial Park Rehabilitation and Street Reconstruction Project
- Fernley Intersection Improvements - Logan/Pilot Intersection, and US 95A/Main Street Intersection Design and Construction
- Area Plan Completion - North Fernley, South Fernley, and Southwest Fernley
- Red Rock Road Extension north to US 50A - Construction
- Red Rock Road Sanitary Sewer Realignment - Construction
- Red Rock Road Waterline Extension - Construction

WNDD CEDS Update Timeline
The updated CEDS will be submitted to the WNDD Board for approval May 22, 2023. Once the CEDS is approved, it will be submitted to the Seattle EDA Regional Office.

RELEVANT LAWS, STATUTES, AND REGULATIONS:

N/A

FINANCIAL IMPLICATIONS:

The approval of the item does not require financial allocations at this time. Until or unless the specific projects move forward, financial consideration will be completed at that time.

ATTACHMENTS:
None

CITY OF FERNLEY

City Council
AGENDA REPORT

Meeting Date: April 19, 2023

REPORT TO:	Mayor and City Council
REPORT FROM:	**Brandi Jensen, City Attorney**

FINANCIAL IMPACT:		**CURRENTLY BUDGETED:**		**FUND/ACCOUNT:**
Yes:x	No:	Yes:x	No:	City Clerk budget for ordinances

ACTION REQUESTED: Motion

AGENDA ITEM: (For Possible Action):

Discussion and Possible Action to direct staff to modify the municipal code in Title 2 Chapter 2 City Manager (formerly known as Bill 317).

AGENDA ITEM BRIEF:

Council requested this item be brought back to have additional changes made to Title 2 Chapter 2 regarding the City Manager.

RECOMMENDED MOTION:

I move to direct staff to modify Chapter 2 of the municipal code as follows

BUSINESS IMPACT (per NRS Chapter 237):

A Business Impact Statement is not required because this is not a rule (term excludes vehicles by which legislative powers are exercised under NRS Chapters 271, 278, 278A, or 278B).

See attached report for background, analysis, alternatives.

ALTERNATIVES:

The Council could leave Chapter 2 as it reads now. Council can modify various sections of the Code as well.

BACKGROUND:

The City Council approved Bill 317 bringing the City closer to being in compliance with State and Federal Law.

Council requested to bring the matter back to make additional changes.

RELEVANT LAWS, STATUTES, AND REGULATIONS:

United States Constitution; Nevada Revised Statutes Chapter 266; Nevada Constitution; Humprheys, Seila and Meyers Supreme Court cases (all cases on termination of an executive branch position).

FINANCIAL IMPLICATIONS:

The ordinance posting costs

ATTACHMENTS:

1. Form of Government Fernley (5.18.22)
2. Bill# 317 Muni Code 2 City Manager

TODAY WE ARE COVERING: THE FORM OF GOVERNMENT IN THE CITY OF FERNLEY

- How government is created
- What are the three branches
- What are the forms of government
- What form do we have
- How do we properly set up our local government for success

THE CONSTITUTION



- Our founding fathers created the constitution
- Created the 3 branches of government and separation of powers
- Checks and Balances

WHAT ARE THE THREE BRANCHES OF GOVERNMENT?

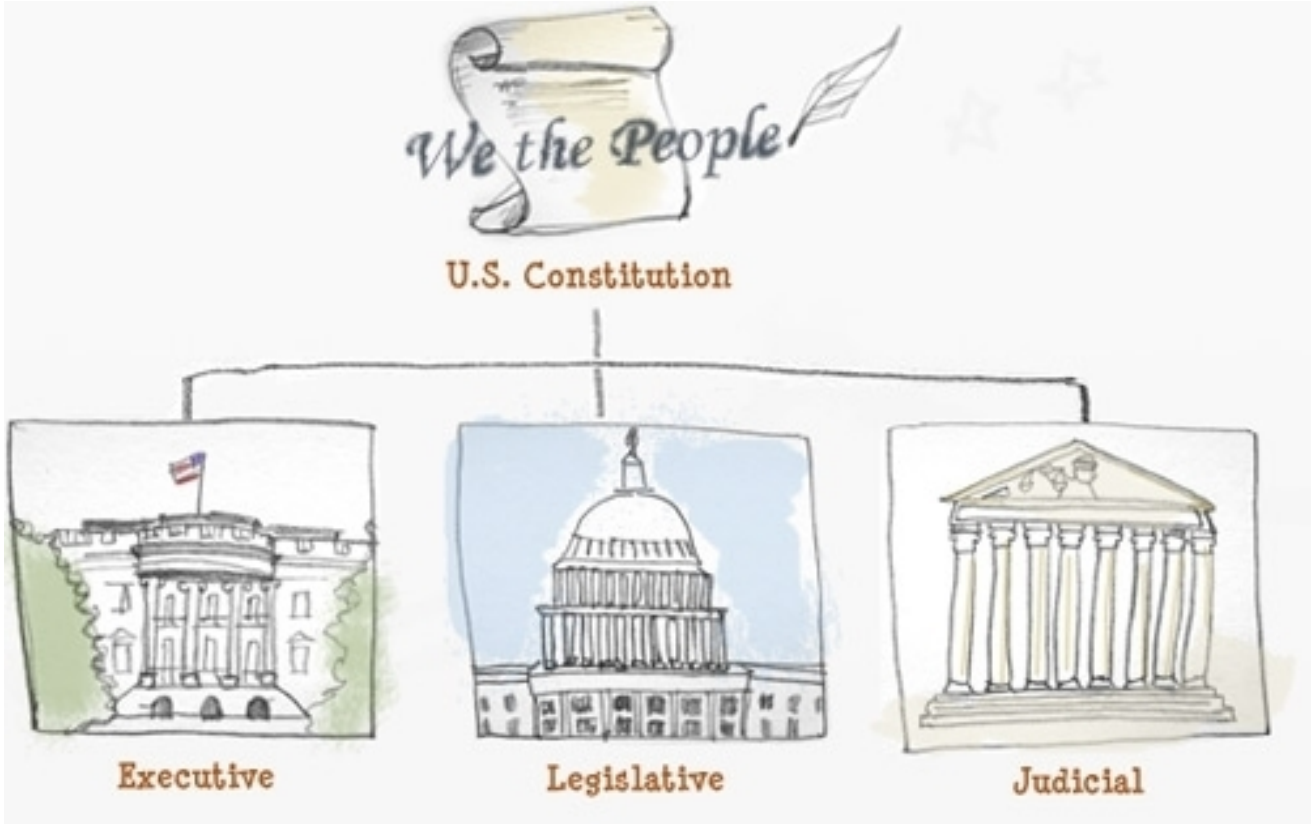

FEDERAL LEVEL:

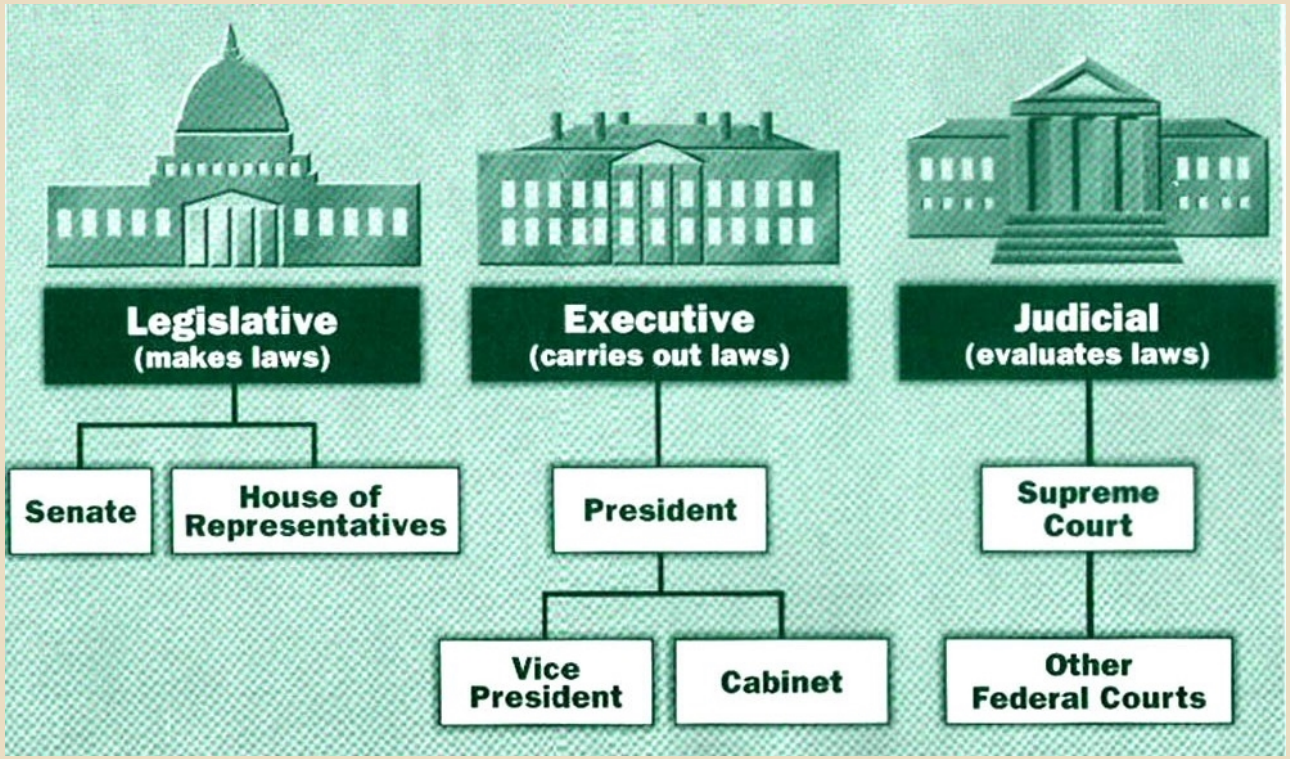

NEVADA CONSTITUTION AND THREE BRANCHES

- Under the separation of powers doctrine of the Nevada Constitution, each of the three branches of government is vested with the authority to exercise its own functions, and **no branch** may exercise the functions of another unless expressly permitted to do so by the Nevada Constitution.

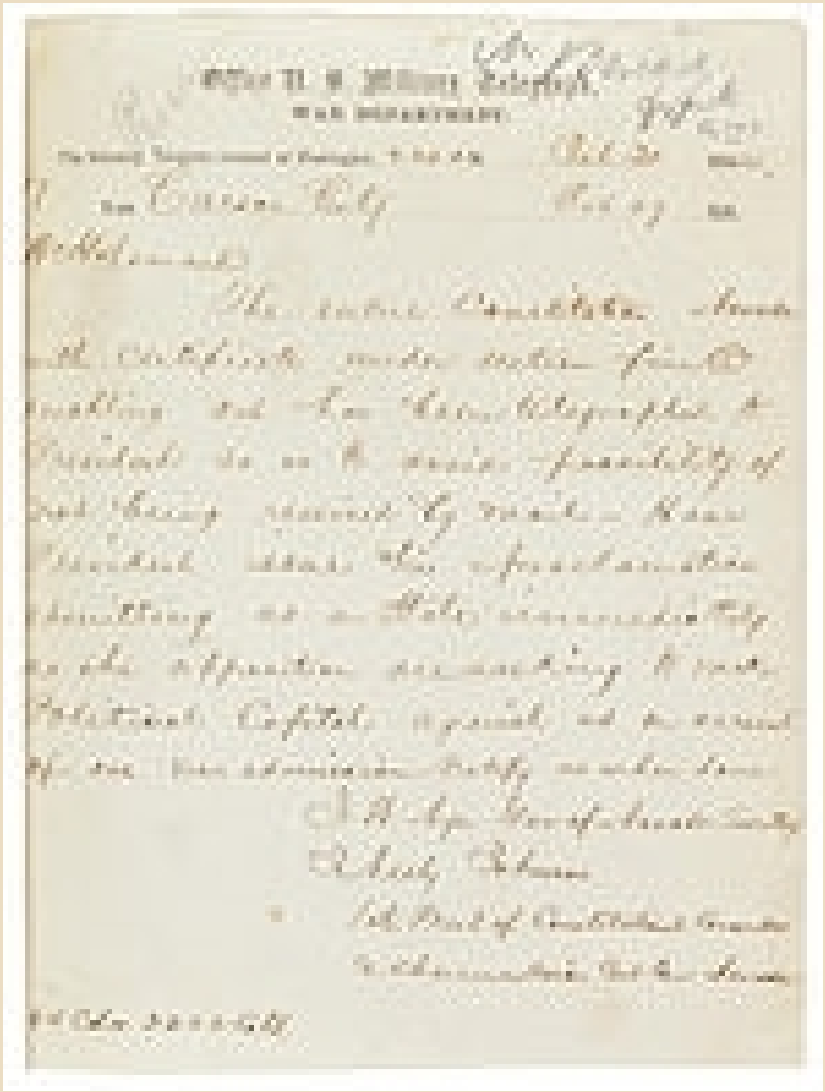

- The powers of the Government of the State of Nevada shall be divided into three separate departments, — the Legislative, — the Executive and the Judicial; and no persons charged with the exercise of powers properly belonging to one of these departments shall exercise any functions, appertaining to either of the others, except in the cases expressly directed or permitted in this constitution.

STATE LEVEL:

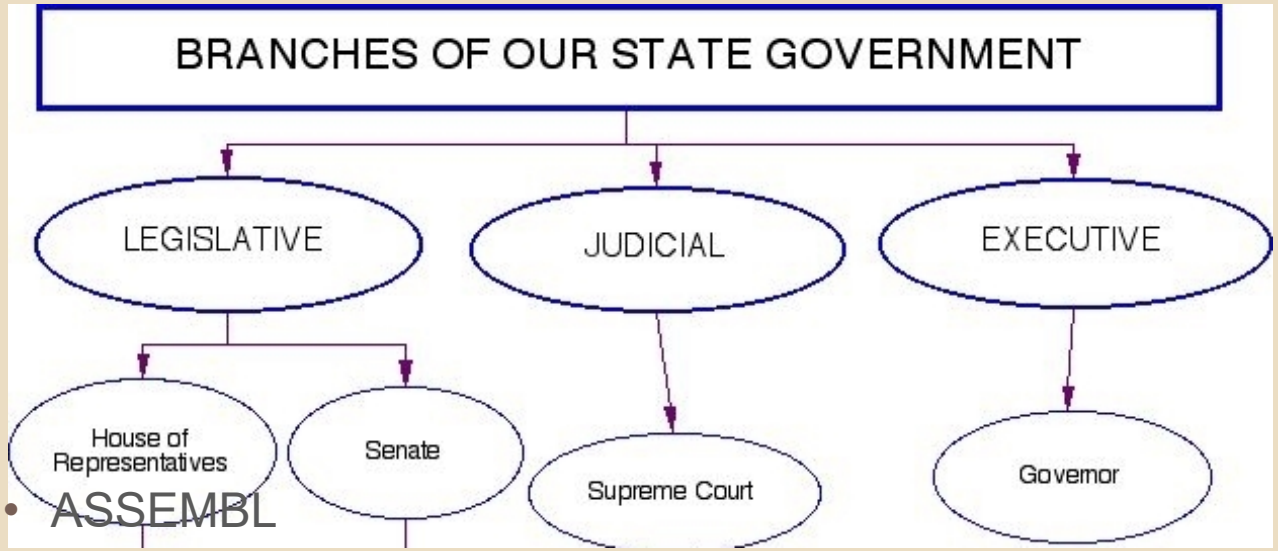

- ASSEMBLY

THREE BRANCHES OF GOVERNMENT IN FERNLEY

- Executive = Mayor
- Legislative = City Council
- Judicial = Municipal Court Judge

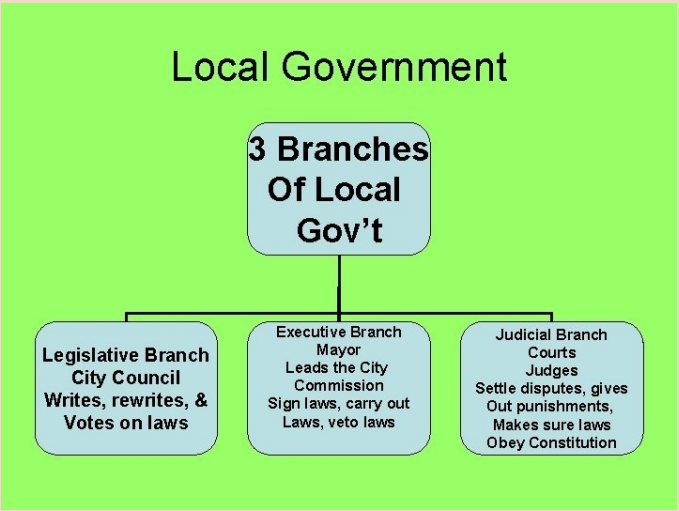

WHO IS THE JUDICIAL BRANCH?

The Municipal Court



MUNICIPAL COURT

- The Court is independent and co-equal to the Legislative and Executive branches.
- Municipal Courts are Part of the Nevada Judiciary.
- Subject to the Judicial Disciplinary Board
- Created pursuant to NRS 266.
- Funded by the City of Fernley.
- Municipal Court Judge is appointed by the Mayor. The Council approves that appointment.



CITY OF SPARKS V. SPARKS MUNICIPAL COURT

Enjoining the City from interfering with the Municipal Court's ability to make personnel decisions under the separation of powers doctrine.

Managing court employees (including firing) is not in the express legislative powers and is unconstitutional.

Any statutory scheme that would allow the legislative branch of municipal government to control or exercise the inherent power of another branch violates the separation of powers doctrine.

Money – Purse Strings – lie within the authority of the Legislative Branch

EVALUATIONS OF THE JUDGE AND THE JUDICIAL EMPLOYEES

- Judiciary only
- Judicial Employees are reviewed by the Judicial department and not the Mayor or Council
- Council does not evaluate the Judge



CREATING CITY GOVERNMENT IN NEVADA

- Nevada created a constitution
- Nevada constitution establishes three branches of government and separation of powers
- Then Legislature created laws (NRS)
- NRS lays out two types of local city government

HOW TO CREATE A CITY CHARTER V. GENERAL LAW

Charter- Legislature creates

- The charter (a document) creates the powers with NRS 268

General – Voter's create

- NRS 266 (a chapter of statutes) creates the powers

FERNLEY IS A GENERAL LAW

- NRS 266.015 “The municipal government of all incorporated cities under this chapter is hereby vested in a mayor and a city council.”
- NRS 266.165: The Chief Executive of a City shall be the Mayor

CITIES IN NEVADA

CHARTER CITIES

- Boulder
- Caliente
- Carlin
- Carson City
- Elko
- Henderson
- Las Vegas
- Mesquite
- North Las Vegas
- Reno
- Sparks
- Wells
- Yerington

GENERAL LAW CITIES

- Ely
- Fallon
- Fernley
- Lovelock
- West Wendover
- Winnemucca

GENERAL LAW CITIES – CITY MANAGER OR NO CITY MANAGER

HAS A CITY MANAGER

- Fernley
- West Wendover
- Winnemucca

DOES NOT HAVE A CITY MANAGER

- Ely
- Fallon
- Lovelock

TYPES OF GOVERNMENT

COUNCIL MANAGER

- City Manager as Chief Executive Officer
- Mayor is in the Legislative Branch

MAYOR COUNCIL

- Mayor as Chief Executive Officer
- Mayor is the Executive Branch leader
- Mayor is NOT in the legislative branch

TWO TYPES OF MAYOR COUNCIL

STRONG MAYOR

- The mayor may appoint and remove departmental heads.
- The mayor drafts and proposes a budget to city council.
- The mayor possesses veto or line-item veto power.
- The mayor officially represents the city on the state, national and international levels.
- The mayor exercises oversight of the city's day-to-day operations.
- The mayor enforces city laws and ordinances.
- The mayor is not a member of city council.

WEAK MAYOR

- City council appoints and approves departmental heads.
- City council (usually in consultation with the mayor or an appointed administrative officer) drafts a budget.
- The mayor possesses limited or no veto power.
- The mayor officially represents the city on the state, national and international levels.
- The mayor may be a member of city council or the presiding officer of city council.

THE MAYOR IS THE EXECUTIVE BRANCH



Per NRS 266: The Chief Executive of a City shall be the mayor.

MAYOR – COUNCIL GOVERNMENT

Because of NRS 266, we are a Strong Mayor-Council form of government structured like the federal/state government.

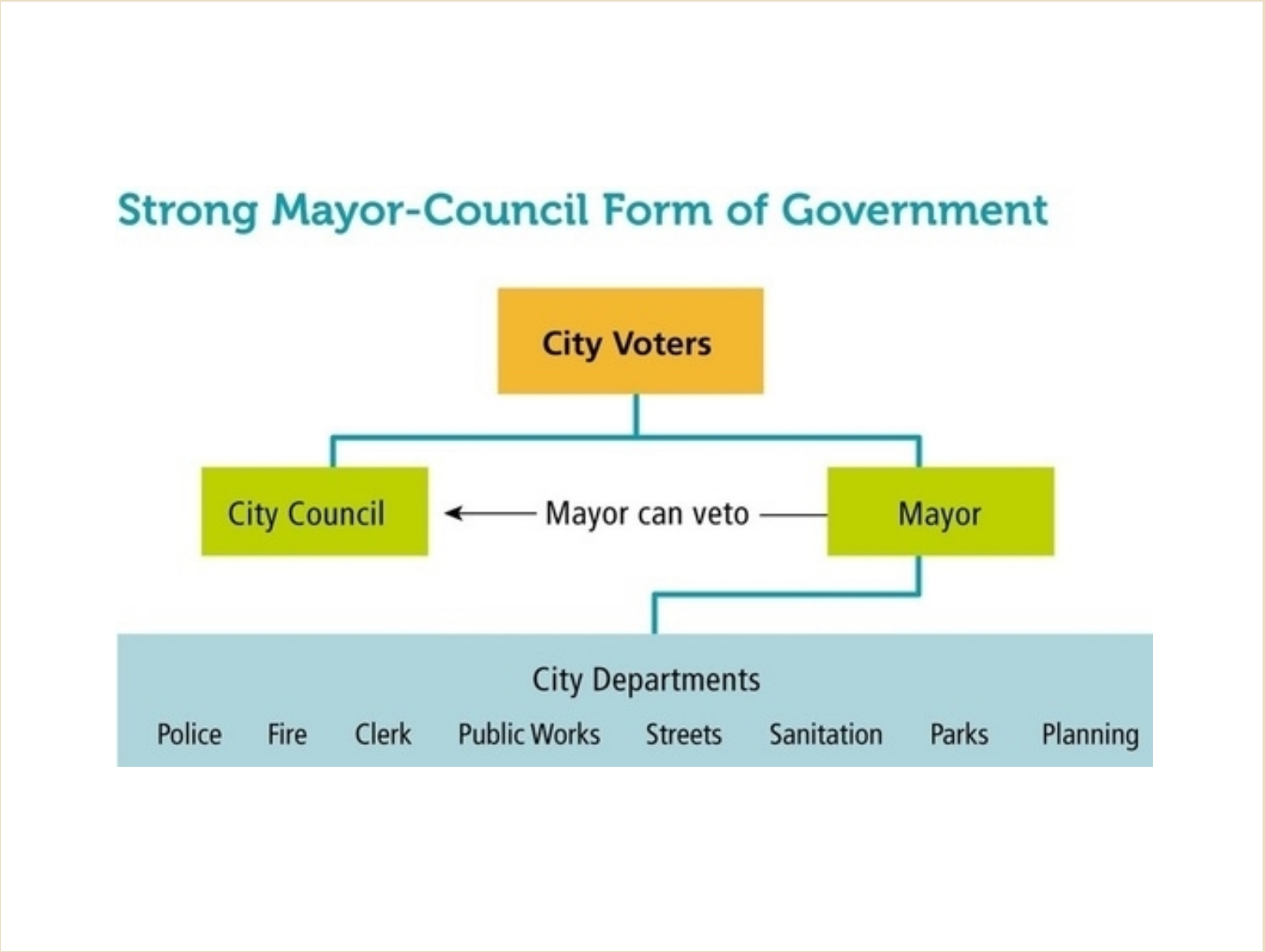

EXECUTIVE POWER
HOW THIS COMPARES TO THE FEDS

PRESIDENT

- State of the Union
- Veto & Sign Bills
- Supervise General Affairs of the Country
- Enforce the laws of Congress
- Make suggestions for new laws
- Nominate/Appoint (A&C)

MAYOR

- State of the City
- Veto & Sign Bills
- Supervise General Affairs of the City
- Enforce the laws of Council
- Make suggestions for new laws
- Nominate/Appoint (A&C)

MAYOR'S DUTIES IN A GENERAL LAW 266 CITY

- **NRS 266.190 General duties.**
- 1. The mayor shall exercise a careful supervision over the general affairs of the city.
- 2. In exercising the duty of supervision pursuant to subsection 1, the mayor shall:
- (a) From time to time, give the city council information in writing relative to the state of the city, and recommend such measures as the mayor may deem beneficial to the city.
- (b) See that all the general laws and ordinances of the city are observed and enforced.
- (c) Take all proper measures for the preservation of public peace and order, and the suppression of riots, tumults and all forms of public disturbances, for which purpose the mayor may, if the city is not participating in a metropolitan police department, appoint extra police officers temporarily and use and command the police force. If the city is participating in a metropolitan police department, the mayor may request law enforcement assistance from the sheriff. In either case, if local law enforcement forces are inadequate, the mayor shall call upon the Governor for military aid in the manner provided by law.
- (d) Sign all licenses and warrants and claims against the city.
- (e) See that all contracts are fully kept and faithfully performed, and, to that end and in any such case where necessary or proper to protect the interests of the city, shall cause legal proceedings to be instituted or defended at the expense of the city.
- (f) Perform such other duties as the city council shall prescribe by ordinance.

WHO IS THE LEGISLATIVE BRANCH?



The City Council

The City's Legislative function is to make and pass laws to control the power of the purse.

LEGISLATIVE POWERS
HOW THIS COMPARES TO FEDS

CONGRESSIONAL POWERS

- Make laws
- Approve President appointments
- Approves Budget

COUNCIL POWERS

- Make laws
- Approve Mayor appointments
- Approves Budget

WHAT TO RETAIN:

- Fernley is a general law city (266)
- Fernley is a Mayor-Council Govt
- Fernley is a Strong Mayor Govt

CAN YOU CREATE OFFICERS AS THE LEGISLATIVE BRANCH

NRS 266.390 THE CITY COUNCIL MAY CREATE ANY OFFICE DEEMED NECESSARY



IS A CITY MANAGER TYPE POSITION EXECUTIVE BRANCH?

MAYORS AND CITY MANAGERS SERVE IN THE EXECUTIVE ROLE FOR CITIES

CAN THE COUNCIL REQUIRE THE POSITION BE APPOINTED BY THE MAYOR AND CONFIRMED BY COUNCIL

FEDERAL APPOINTMENTS

- The United States Constitution provides that the president "shall nominate, and by and with the Advice and Consent of the Senate, shall appoint Ambassadors, other public Ministers and Consuls, Judges of the Supreme Court, and all other Officers of the United States, whose Appointments are not herein otherwise provided for." (Article II, section 2).

CITY APPOINTMENTS

- Nevada Constitution
- NRS 266.395: The mayor, with the advice and consent of the city council, shall appoint all such officers as may be provided for by law or ordinance.

TERMINATION OF AN EXECUTIVE POSITION –SUPREME COURT OF THE UNITED STATES

- Myers –removal of appointed officials lies with President, Senate cannot require approval
- Humprheys – removal of executive employees is the exclusive power of the Chief Executive Officer
- Seila – unencumbered Presidential authority for removal of all executive officers

CAN THE COUNCIL TERMINATE OR IS IT UNCONSTITUTIONAL

- United states supreme court rules unconstitutional all three times to remove an executive officer
- Nevada supreme court ruled managing employees of a separate branch (including firing) is not in the express legislative powers and is unconstitutional.

TERMINATION OF AN EXECUTIVE POSITION – NEVADA CONSTITUTION

- Nevada Constitution grants the Legislature the authority to create laws for the removal of civil officers for malfeasance and nonfeasance
- NRS allows for the removal of officers by majority vote (limited by constitution)
- Mayor can terminate the position
- Council can terminate for malfeasance/nonfeasance only

MALFEASANCE AND NONFEASANCE DEFINED

MALFEASANCE

- Intentional conduct that is unlawful.
- Malfeasance is at a higher level of wrongdoing than nonfeasance (failure to act where there was a duty to act)

NONFEASANCE

- Nonfeasance is a legal concept that refers to the willful failure to execute or perform an act or duty required by one's position, office, or law whereby that neglect results in harm or damage to a person or property. The perpetrator can be found liable and subject to prosecution.

NRS 266.430

- In case the mayor or any municipal officer is adjudged guilty of nonfeasance, misfeasance or malfeasance by any court of competent jurisdiction he or she shall be fined in a sum not exceeding $1,000. The court in which such conviction shall be had shall enter an order removing such officer from office; and the officer shall not be eligible to any municipal office thereafter.
- 32 NRS references to malfeasance nonfeasance

HOW CAN WE REGULATE THE EXECUTIVE BRANCH – THE MAYOR?

Purse strings

Recall

Malfeasance

WHAT ARE WE CHANGING

- REPORTS TO THE MAYOR
- EVALUATED BY THE MAYOR
- FIRED BY THE MAYOR
- FIRED BY THE COUNCIL FOR MALFEASANCE NONFEASANCE

CONCLUSION

- The position is an executive branch position
- The position is under the Mayor
- The Mayor can appoint with City Council confirmation
- The Mayor can terminate the position
- The Council can terminate under Malfeasance Nonfeasance
- Now – what to name the position



WHAT DO YOU NAME THE POSITION



PROBLEM: CAN'T HAVE TWO CHIEF EXECUTIVE OFFICERS

In some strong-mayor governments, the mayor will appoint a chief administrative officer who will supervise department heads, prepare the budget, and coordinate departments. This officer is sometimes called a city manager;

While the term used in the council–manager government, the manager is responsible **only** to the mayor in this variant.

WHAT TO NAME THE POSITION

CITY MANAGER

- Legal
- Creates confusion that the position is the chief executive officer

CHIEF ADMINISTRATIVE OFFICER

- Legal
- Eliminates confusion

STEPS TO TAKE

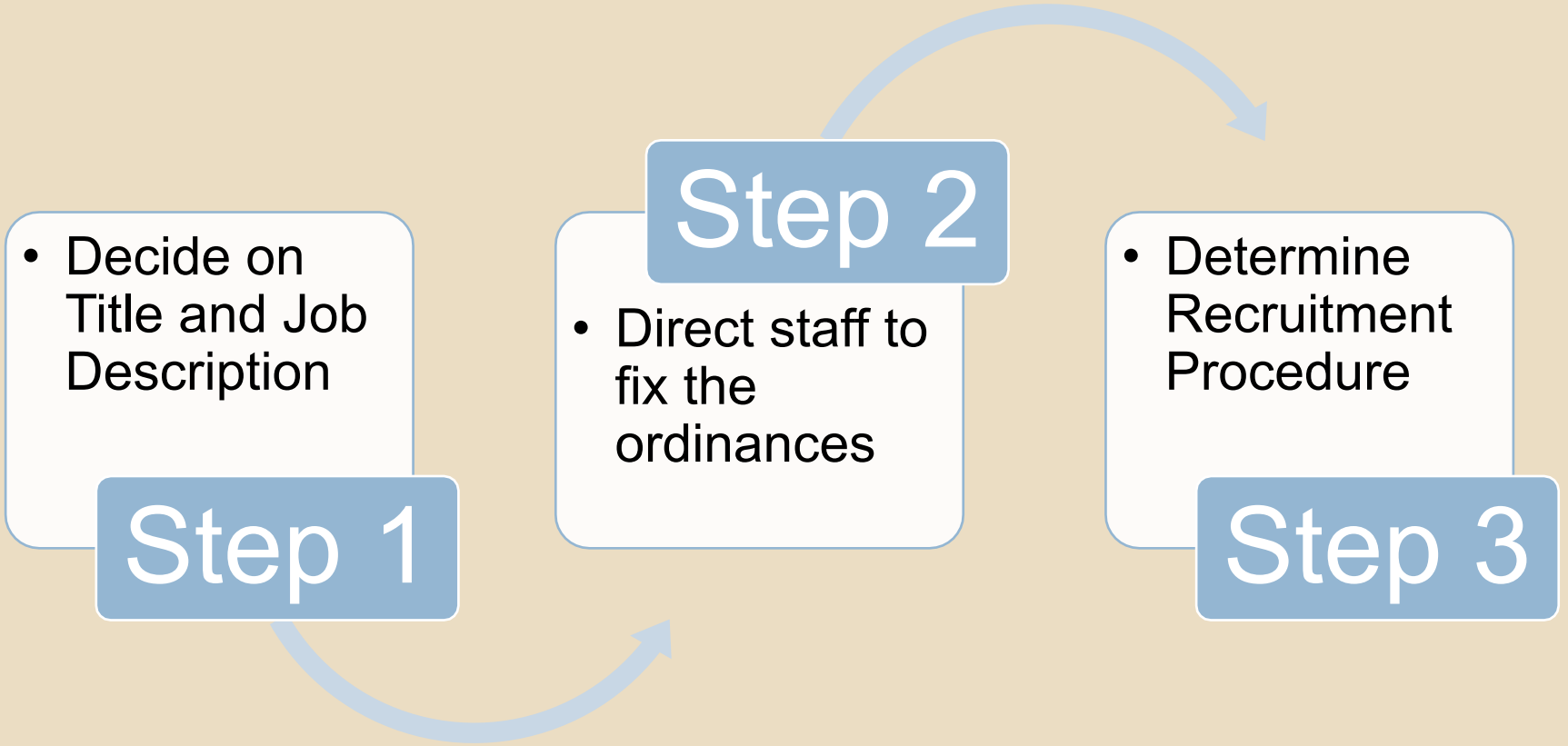

AT THIS POINT: YOU CAN TAKE A VOTE TO NAME THE POSITION



FIX IT

VOTE TO DIRECT STAFF TO FIX THE CODE

JOB DESCRIPTION

YOU ALREADY VOTED
LET LEGAL DO A FINAL REVIEW

RECRUITMENT

INTERNAL, EXTERNAL


QUESTIONS

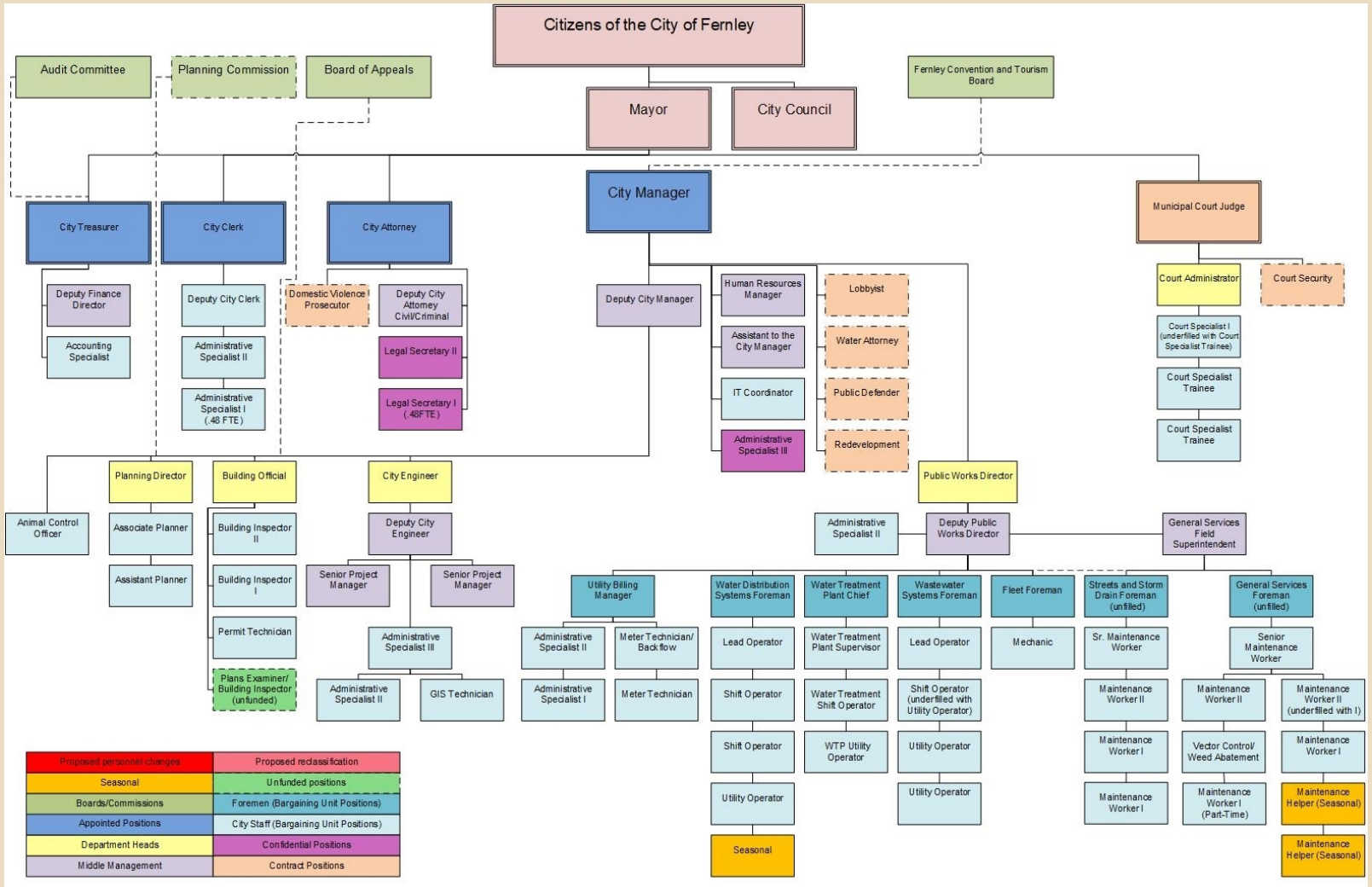
Citizens of the City of Fernley
Audit Committee
Planning Commission
Board of Appeals
Mayor
City Council
Fernley Convention and Tourism Board
City Manager
City Treasurer
City Clerk
City Attorney
Municipal Court Judge
Deputy Finance Director
Accounting Specialist
Deputy City Clerk
Administrative Specialist II
Administrative Specialist I (.48 FTE)
Domestic Violence Prosecutor
Deputy City Attorney Civil/Criminal
Legal Secretary II
Legal Secretary I (.48FTE)
Deputy City Manager
Human Resources Manager
Assistant to the City Manager
IT Coordinator
Administrative Specialist III
Lobbyist
Water Attorney
Public Defender
Redevelopment
Court Administrator
Court Security
Court Specialist I (underfilled with Court Specialist Trainee)
Court Specialist Trainee
Court Specialist Trainee
Planning Director
Building Official
City Engineer
Public Works Director
Animal Control Officer
Associate Planner
Assistant Planner
Building Inspector II
Building Inspector I
Permit Technician
Plans Examiner/ Building Inspector (unfunded)
Deputy City Engineer
Senior Project Manager
Senior Project Manager
Administrative Specialist III
Administrative Specialist II
GIS Technician
Administrative Specialist II
Deputy Public Works Director
General Services Field Superintendent
Utility Billing Manager
Administrative Specialist II
Administrative Specialist I
Meter Technician/ Backflow
Meter Technician
Water Distribution Systems Foreman
Lead Operator
Shift Operator
Shift Operator
Utility Operator
Seasonal
Water Treatment Plant Chief
Water Treatment Plant Supervisor
Water Treatment Shift Operator
WTP Utility Operator
Wastewater Systems Foreman
Lead Operator
Shift Operator (underfilled with Utility Operator)
Utility Operator
Utility Operator
Fleet Foreman
Mechanic
Streets and Storm Drain Foreman (unfilled)
Sr. Maintenance Worker
Maintenance Worker II
Maintenance Worker I
Maintenance Worker I
General Services Foreman (unfilled)
Senior Maintenance Worker
Maintenance Worker II
Vector Control/ Weed Abatement
Maintenance Worker I (Part-Time)
Maintenance Worker II (underfilled with I)
Maintenance Worker I
Maintenance Helper (Seasonal)
Maintenance Helper (Seasonal)
Proposed personnel changes
Seasonal
Boards/Commissions
Appointed Positions
Department Heads
Middle Management
Proposed reclassification
Unfunded positions
Foremen (Bargaining Unit Positions)
City Staff (Bargaining Unit Positions)
Confidential Positions
Contract Positions

BILL # 317

CITY OF FERNLEY

ORDINANCE #2022- 011

AN ORDINANCE AMENDING THE CITY OF FERNLEY MUNICIPAL CODE CHAPTER 2 IN VARIOUS SECTIONS, INCLUDING, BUT NOT LIMITED TO SUPERVISION OF THE CITY MANAGER; SECTION 2.02.02 APPOINTMENT AND SALARY OF THE CITY MANAGER; (RESIDENCY AND HIRING RESOLUTION); AND SECTION 2.02.03 REMOVAL OF THE CITY MANAGER.

THE CITY COUNCIL OF THE CITY OF FERNLEY DO ORDAIN THE FOLLOWING:

Chapter 2 City Manager shall read as follows:

CHAPTER 2. CITY MANAGER

Sec. 2.02.01. Creation of office.

The office of City Manager, hereinafter referred to as "City Manager" or "Manager," is hereby created.

(Prior Code, § 1.05.01)

Sec. 2.02.02. Appointment and salary of the city manager.

(a) Appointment. The City Manager, pursuant to NRS 266.395 and 266.405, shall be appointed by the Mayor with consent of the City Council. Consent shall be defined as a majority vote of the Council.

(b) Qualifications. The Manager shall be chosen by the Mayor and City Council on the basis of executive and administrative qualifications with special reference to actual experience or knowledge regarding the duties of the office hereinafter set forth. The Manager serves at-will at the pleasure of the Mayor and may be terminated for any reason or no reason, with or without notice, so long as the termination is not for an illegal reason. All recommendations for appointment or removal shall be without regard to political beliefs or affiliations. At the time of appointment, the appointee need not be a resident of the city or state, but within twelve months of employment, shall reside within the city limits. No Mayor or Councilmember shall receive such appointment unless in compliance with state law restriction on point.

(c) The salary and benefits of the City Manager shall be set by the mayor with approval of the City Council, including but not limited to personal time off, insurance benefits for the city manager and dependents, retirement benefits, bonuses and raises, all of which are discretionary, and not guaranteed.

(d) The City Manager is subject to the City's Handbook and Personnel Policies except those policies covering discipline, lay-off and dispute resolution. The City Manager is excluded from any due process rights which may be provided in those policies, considering the at-will status of the position.

(Prior Code, § 1.05.02; 2.02.02 version 12.21..22))

Sec. 2.02.03. Removal of the city manager.

(a) The City Manager may be removed by the Mayor. The Council reserves the right to remove the City Manager once the City Manager has been deemed by a Court to have committed malfeasance or nonfeasance.

(b) The City Manager may appeal the Mayor's decision to remove the employee to the City Council. The removed City Manager shall file said appeal with the Human Resources Manager within 5 days of removal by the Mayor. The Human Resources manager shall place the item on the agenda within 30 days of the filing of the appeal. The City Manager will not be on paid leave during the appellate process. The Mayor's removal of the City Manager can only be overturned by a super-majority vote of Council during the appellate hearing. The Mayor is not obligated but may present evidence and or reasoning for the termination. Said presentation of evidence can be informally presented. The removed City Manager may also present evidence and or testimony during this hearing informally. Said hearing will be subject to the rules of NRS and Open Meeting Law.

(Prior Code, § 1.05.03)

Sec. 2.02.04. Powers and duties of the city manager.

(a) Chief administrative officer. Insofar as the Mayor is the Chief Executive Officer of the City under NRS 266.165 with the attendant responsibilities, powers, and duties as described in NRS 266.190, the City Manager shall be the Chief Administrative Officer/Chief Operational Officer, and the City Manager shall direct his or her efforts toward enforcing the vision, budget, and ordinances established by the City Council. The City Manager shall communicate and cooperate with the Chief Executive Officer, the Mayor, in accomplishing these described objectives, powers, and responsibilities. It is the City Manager's responsibility to keep the Mayor and City Council informed relative to the City's needs and conditions, as well as to provide the Mayor and City Council with any reports that may be required by law or requested by the Mayor or City Council.

(b) Exceptions to authority. The City Manager shall be the administrative head of the City and shall be responsible to the City Council for the administration of all departments with the following exceptions:

(1) Statutory Positions and Evaluations. The City Manager shall have no authority over statutory positions and evaluations. Statutory positions are those established through NRS: The City Attorney, City Clerk, City Treasurer, and Municipal Judge.

(2) Annual Evaluation. The City Manager shall be subject to an employee evaluation process once a year at a minimum. Said evaluations shall be conducted in compliance with the open meeting law. Evaluations will be conducted by the Mayor with an evaluation form that has been approved by the City Council and the Mayor. The Mayor has the discretion but is not required to solicit a peer review from the statutory positions (using an approved peer review form).

(3) Paid Administrative Leave for Violations of Law or Policy. The City Manager shall also have the authority to place any statutory position, except the Municipal Judge, on immediate and paid administrative leave for violations of law or policy. Placing an employee on paid administrative leave is not a disciplinary action. The City Manager shall notify the Mayor and City Council that the statutory

position was placed on administrative leave within 24 hours of the statutory position being placed on leave.

(4) Investigations. Except for the Municipal Judge, the City Manager shall also have the authority to initiate an investigation regarding all City employees, including, but not limited to, the statutory positions, the Mayor, and the City Councilmembers, for violations of the law and/or the policies of the City. Within 24 hours of the initiation of the investigation, the City Manager shall notify the Mayor and City Councilmembers (who are not the subject of the investigation), that an investigation has begun only with regard to a statutory position, the Mayor, or a City Councilmember, as well as any notification as required by policy or law. Should an incident arise regarding the City Manager, the Deputy City Manager shall take the position of the City Manager in the requirements above. Should the position of Deputy City Manager not exist, the Mayor shall take the position of the City Manager in the requirements above.

(5) Chief Executive Officer. Under NRS Ch. 266, the Mayor is the Chief Executive Officer. Therefore, when a personnel issue arises with the City Manager, the point of contact shall be the Mayor.

(6) Issue with the City Manager. Any person who knows of an alleged personnel issue involving the City Manager may decide to move forward through the process by contacting the Mayor.

(7) Mayor Authority to Place City Manager on Leave. After consultation with Legal and Human Resources, the Mayor shall also have the authority to place the City Manager on immediate paid administrative leave for violations of law or policy.

(8) Non-Disciplinary. Placing an employee on paid administrative leave is not a disciplinary action.

(9) Notification. The Mayor shall notify the City Council that the City Manager was placed on administrative leave within 24 hours of the City Manager being placed on leave.

(c) Administrative authority. The City Manager shall be responsible to the council for the proper administration of the affairs of the City. The City Manager's chief guide in conducting and structuring City personnel will be the City Personnel Policy Manual and the Collective Bargaining Agreement. The City Manager's authority is further defined as follows:

(1) The Mayor should be consulted and informed of policy decisions prior to making such a decision. The City Manager shall also inform the Mayor and the City Council of all significant personnel decisions including but not limited to termination, resignations, etc. The City Manager shall immediately share with the Mayor all adopted internal policies. All external policies (those affecting the public rather than City internal/administrative policies) shall be brought before the Council for approval.

(2) Appoint and, when necessary for the good of the City suspend or remove all subordinates of the City Manager when allowed by law. The Manager may authorize the head of a department or office to appoint, suspend, or remove subordinates in such department or office.

(3) The City Manager shall submit personnel decisions regarding the creation of new positions, reclassifications of any positions, and any rate increase or raise to the City Council for its approval. Any and all raises must be in compliance with the Collective Bargaining Agreement. Any action by the City Council relative to personnel issues shall be properly noticed and in compliance with the NRS Ch. 241 and in compliance with the City Personnel Manual and Collective Bargaining Agreement.

(4) Prepare the City budget annually and submit it to the Council together with a message describing the important features and be responsible for its administration after adoption. The City Manager shall prepare the budget with equal participation and input from the City Treasurer. Both the City Manager and the City Treasurer shall meet at a minimum on a weekly basis for the 90 days prior to the budget adoption by Council, or as otherwise directed by the Mayor, and work together cooperatively on preparing the budget. Said meetings are to be set up by the City Manager's office.

(5) Prepare and submit to the Council as of the end of the fiscal year a complete report on the finances and administrative activities of the Council for the preceding year.

(6) Keep the Council advised of the financial condition and future needs of the City and make such recommendations as may be deemed desirable.

(7) Recommend to the Council a schedule under the City Manager (all positions but for the statutory positions), including minimum and maximum rates, and step increases subject to approval by City Council.

(8) Recommend to the Council adoption of such measures as may be deemed necessary or conducive to the maintenance or improvement of the health, safety, or welfare of the community or for the improvement of administrative services.

(9) Consolidate, combine, reorganize, and/or reclassify offices, positions, departments, or units under his or her jurisdiction, with the approval of the Council, to structure the operational departments of the City.

(10) Attend all meetings of the Council unless excused by the Mayor and take part in the discussion of all matters coming before the Council. The City Clerk shall notice the City Manager of all regular and special meetings of the Council.

(11) Supervise the purchase of all materials, supplies, and equipment for which funds are provided in the budget; let contracts necessary for operation or maintenance of the City services. The City Manager shall have the spending authority set out in the Citywide approved Purchasing Policy.

(12) Investigate the affairs of the City or any Department or Division thereof, as appropriate, and pursuant to the above sections. Investigate or delegate the investigation of all complaints in relation to matters concerning the administration of the government of the City, and in regard to service maintained by the public utilities in the City, and see that all franchises, permits, and privileges granted by the City are faithfully observed.

(13) Devote his or her time to the discharge of all official duties and will not engage in other employment while working for the City unless approved by the mayor.

(14) Perform such other duties as may be required by the Mayor, not inconsistent with laws or ordinances.

(Prior Code, § 1.05.04)

Sec. 2.02.05. Executive branch appointment authority.

As the Council is the legislative branch, and the Mayor and the City Manager are the executive branch, neither the Council nor any of its members shall direct or request the appointment of any person to, or removal from, office by the Manager or any of the Manager's subordinates, or in any manner take part in the appointment of officers and employees in the administrative services of the City, except for the statutory positions through the Mayor. Except for the purpose of inquiry, the Council and its members shall deal with the administration solely through the Mayor and the City Manager and neither the Council nor any member thereof shall give orders to any subordinates of the City Manager, either publicly or privately.

(Prior Code, § 1.05.05)

Sec. 2.02.06. Emergencies.

The City Manager shall have the authority to make purchases for emergencies pursuant to the purchasing policy.

(Prior Code, § 1.05.06)

Sec. 2.02.07. Temporary absence or vacancy; acting city manager.

(a) In the event of a temporary absence by the Manager, should the position exist, the Deputy City Manager shall automatically become the Acting City Manager. The City Manager is obligated, if reasonably possible, to immediately notify the Deputy City Manager of said action. The City Manager is obligated to give as much advance notice as possible of any planned absence to the Deputy City Manager.

(b) If the Deputy City Manager is unable to perform as the Acting City Manager, or the position does not exist, the City Manager may appoint an Acting City Manager during his or her absence.

(c) If the City Manager is incapacitated to the point that he or she cannot make a temporary appointment, the Mayor shall be empowered to appoint an Acting City Manager.

(d) If the City Manager is absent due to a suspension or placed on administrative leave by the Council, the Mayor shall be empowered to appoint an Acting City Manager.

(e) During a vacancy of the City Manager's position, the Mayor with confirmation by Council may appoint an Acting City Manager. The Acting City Manager shall exercise the full authority of the Manager during the temporary absence or vacancy of the City Manager's position.

(Prior Code, § 1.05.07)

Sec. 2.02.08. Saving clause.

If any section, subsection, or sentence, clause, or phrase of this chapter is for any reason held invalid, such decision or decisions shall not affect the validity of the remaining portions of this chapter.

(Prior Code, § 1.05.08; Ord. No. 2015-002)

PROPOSED on the 2nd Day of Nov, 2022.

PASSED, APPROVED and ADOPTED this 16th day of Nov, 2022, by the following vote of the Council:

Ayes: 5 Nays: 0 Abstentions: 0 Absent: 0

FERNLEY CITY COUNCIL

By: _____ Date: Nov 17 2022

Roy Edgington, Mayor

Attest By: Kimberly Swanson Date: 11/17/2022

Kimberly Swanson, City Clerk

CITY OF FERNLEY

City Council
AGENDA REPORT

Meeting Date: April 19, 2023

REPORT TO:	Mayor and City Council
REPORT FROM:	**RanDee Gahr**

FINANCIAL IMPACT:		**CURRENTLY BUDGETED:**		**FUND/ACCOUNT:**
Yes:X	No:	Yes: X	No:	100-525-322 & 100-525-600

ACTION REQUESTED: Motion

AGENDA ITEM: (For Possible Action):

Possible action to direct staff to proceed with sponsoring a low-cost Rabies Vaccine / Dog Microchip clinic on May 20, 2023.

AGENDA ITEM BRIEF:

Key Points:

1. Rabies vaccinations are required for each dog under NRS 441A.410 and FMC 6.04 (A). The average cost of an appointment is $35.00 and vaccinations are typically around $15-20 each.
2. Most dogs that are impounded by Animal Control do not have updated Rabies vaccinations and owners are required to license their dogs within 30 days of impoundment.
3. The majority of dogs that are impounded by Animal Control do not have microchips or other identification. Animals that are microchipped are more easily reunited with their owners, which may result in fewer dogs being impounded, which results in fewer trips to the Lyon County Animal Shelter in Silver Springs.

RECOMMENDED MOTION:

"I move to allow citizens of the City of Fernley to sponsor a Rabies Vaccinations / Dog Microchip Clinic at a charge of fifteen dollars per dog."

BUSINESS IMPACT (per NRS Chapter 237):

Nevada Statutes: NRS 441A.410, NAC 441A.410

Fernley Municipal Code: Fernley Municipal Code 6.04 (A)

See attached report for background, analysis, alternatives.

ALTERNATIVES:

BACKGROUND:

Yearly, Animal Control impounds nearly 200 dogs, and of those, most do not have an up-to-date rabies certificate and are not equipped with a microchip. The cost to vaccinate a dog against Rabies is about $50.00 for each animal and some community members are on a fixed income or are unable to drive to outlying low-cost vaccination clinics. Fernley Animal Control would like to host a low-cost vaccination clinic at City Hall on May 20th, providing not only affordable Rabies vaccinations, but also giving free microchips to attendees in the hopes that more animals can be reunited in the field instead of having to be impounded at the shelter. The event would be for Fernley residents only and participants would be required to license their dogs at the time of the vaccination. Vaccines would be purchased for $15.00 and dogs would be provided a free microchip if not already installed.

RELEVANT LAWS, STATUTES, AND REGULATIONS:

Nevada Statutes: NRS 441A.410, NAC 441A.410
Fernley Municipal Code: Fernley Municipal Code 6.04 (A)

FINANCIAL IMPLICATIONS:

Vaccine-$4.00
Microchip-$7.50
Tag- $0.47
Form-$1.00
Total-$12.97 per dog

In addition, the vet's fee is $350 for the 4 hour event.

ATTACHMENTS:
None

CITY OF FERNLEY

City Council
AGENDA REPORT

Meeting Date: April 19, 2023

REPORT TO:	Mayor and City Council
REPORT FROM:	**Lydia Altick, Deputy City Manager**

FINANCIAL IMPACT:		**CURRENTLY BUDGETED:**		**FUND/ACCOUNT:**
Yes:X	No:	Yes:	No: X	General Fund Revenue / 100-000-320-170

ACTION REQUESTED: Resolution

AGENDA ITEM: (For Possible Action):

Discuss and Possible Action to adopt Resolution 23-003 to increase dog license fees.

AGENDA ITEM BRIEF:

SUPPORTING INFORMATION

The Animal Control Officer's primary responsibility is to protect public safety and is the Rabies Control Authority for the City of Fernley. Nevada Administrative Code 441A.410 requires all dogs, cats and ferrets to be vaccinated against rabies and FMC 6.04 (A) requires all dogs to be licensed with Animal Control to ensure compliance with Rabies vaccination protocol.

License fees last updated in 2002, charge $5.00 for altered dogs and $10.00 for intact dogs per year, up to the expiration of the Rabies certificate. A lost or worn tag costs $1.00 to replace.

Research of the surrounding jurisdictions has revealed that Fernley charges less than most other comparable cities and counties in Northern Nevada. The goal of Animal Control is to increase the license fee for only unaltered animals to $25.00 per year up to the expiration of the Rabies certificate.

Other comparable jurisdictions' fees are listed below:

Location	Altered	Unaltered	Senior
Carson City	**$8.00**	**$25.00**	-
Churchill County	**$2.50**	**$2.50**	-
Elko County	**$5.00**	**$10.00**	-
Humboldt County/City of Winnemucca	**$5.00**	**$15.00**	-

Lyon County	**$5.00**	**$25.00**	**Free, 65+**
Washoe County	**$8.00**	**$20.00**	**-**

RECOMMENDED MOTION:

"I move to adopt Resolution 23-003 to increase dog license fees."

BUSINESS IMPACT (per NRS Chapter 237):

A Business Impact Statement is not required because this is not a rule (term excludes vehicles by which legislative powers are exercised under NRS Chapters 271, 278, 278A, or 278B).

See attached report for background, analysis, alternatives.

ALTERNATIVES:

Keep dog license fees the same as they are today.

BACKGROUND:

PRIOR COUNCIL ACTION/REVIEW

In 2018, a proposal was brought before City Council to increase the license fees from $10.00 for intact animals to $25.00, which did not pass. Prior to this, in October 2002, City Council passed the current license fees of $5.00 for altered animals and $10.00 for unaltered animals.

RELEVANT LAWS, STATUTES, AND REGULATIONS:

Nevada Statutes: NRS 441A.410, NAC 441A.410
Fernley Municipal Code: Fernley Municipal Code 6.04 (A)
Policies & Procedure Manual: N/A
Community Assessment: N/A
Other: Resolution #02-009

FINANCIAL IMPLICATIONS:

Raising dog licensing fees will align the City of Fernley with current Lyon County fees.

ATTACHMENTS:

1. Resolution 23-003

CITY OF FERNLEY
RESOLUTION #23-003

A RESOLUTION OF THE CITY OF FERNLEY ADOPTING DOG LICENSING FEES

WHEREAS, the City of Fernley, a political subdivision of the State of Nevada, organized pursuant to the provisions of NRS Chapter 266; and,

WHEREAS, the City of Fernley Council initially established an animal control program to implement City Code Title 6, pertaining to animals and animal services; and,

WHEREAS, the City Code, Title 6, Section 6.04(a) sets forth the requirement for dog licensing and allows the City to set fees for such licenses; and,

WHEREAS, the City wishes to implement the provisions of City Code Title 6, including section 6.04(a), in order to protect the health, safety and welfare of the residents of the City.

NOT, THEREFORE, BE IT RESOLVED, that:

1. Fees for dog licenses and tags, other than dogs housed in a kennel, shall be listed and effective June 1, 2023.
    a. Dog license and tag for each intact dog $25.00;
    b. Dog license and tag for each altered dog $5.00; and,
    c. Replacement for a lost or worn out tag $5.00.

PASSED, APPROVED AND ADOPTED this 19th day of April 2023 by the following vote of the Council:

AYES: _____ NAYS: _____ ABSTENTIONS: _____ ABSENT: ____

By: _____
Mayor Neal E. McIntyre

ATTEST:_____
City Clerk Kim Swanson